AUTHENTICATED
U.S. GOVERNMENT
INFORMATION
GPO

Federal Register

6–27–02 Thursday
Vol. 67 No. 124 June 27, 2002
Pages 43217–43524

The **FEDERAL REGISTER** is published daily, Monday through Friday, except official holidays, by the Office of the Federal Register, National Archives and Records Administration, Washington, DC 20408, under the Federal Register Act (44 U.S.C. Ch. 15) and the regulations of the Administrative Committee of the Federal Register (1 CFR Ch. I). The Superintendent of Documents, U.S. Government Printing Office, Washington, DC 20402 is the exclusive distributor of the official edition.

The **Federal Register** provides a uniform system for making available to the public regulations and legal notices issued by Federal agencies. These include Presidential proclamations and Executive Orders, Federal agency documents having general applicability and legal effect, documents required to be published by act of Congress, and other Federal agency documents of public interest.

Documents are on file for public inspection in the Office of the Federal Register the day before they are published, unless the issuing agency requests earlier filing. For a list of documents currently on file for public inspection, see http://www.nara.gov/fedreg.

The seal of the National Archives and Records Administration authenticates the Federal Register as the official serial publication established under the Federal Register Act. Under 44 U.S.C. 1507, the contents of the **Federal Register** shall be judicially noticed.

The **Federal Register** is published in paper and on 24x microfiche. It is also available online at no charge as one of the databases on GPO Access, a service of the U.S. Government Printing Office.

The online edition of the **Federal Register** is issued under the authority of the Administrative Committee of the Federal Register as the official legal equivalent of the paper and microfiche editions (44 U.S.C. 4101 and 1 CFR 5.10). It is updated by 6 a.m. each day the **Federal Register** is published and it includes both text and graphics from Volume 59, Number 1 (January 2, 1994) forward.

GPO Access users can choose to retrieve online **Federal Register** documents as TEXT (ASCII text, graphics omitted), PDF (Adobe Portable Document Format, including full text and all graphics), or SUMMARY (abbreviated text) files. Users should carefully check retrieved material to ensure that documents were properly downloaded.

On the World Wide Web, connect to the **Federal Register** at http://www.access.gpo.gov/nara. Those without World Wide Web access can also connect with a local WAIS client, by Telnet to swais.access.gpo.gov, or by dialing (202) 512–1661 with a computer and modem. When using Telnet or modem, type swais, then log in as guest with no password.

For more information about GPO Access, contact the GPO Access User Support Team by E-mail at gpoaccess@gpo.gov; by fax at (202) 512–1262; or call (202) 512–1530 or 1–888–293–6498 (toll free) between 7 a.m. and 5 p.m. Eastern time, Monday–Friday, except Federal holidays.

The annual subscription price for the **Federal Register** paper edition is $699, or $764 for a combined **Federal Register, Federal Register** Index and List of CFR Sections Affected (LSA) subscription; the microfiche edition of the **Federal Register** including the **Federal Register** Index and LSA is $264. Six month subscriptions are available for one-half the annual rate. The charge for individual copies in paper form is $10.00 for each issue, or $10.00 for each group of pages as actually bound; or $2.00 for each issue in microfiche form. All prices include regular domestic postage and handling. International customers please add 25% for foreign handling. Remit check or money order, made payable to the Superintendent of Documents, or charge to your GPO Deposit Account, VISA, MasterCard or Discover. Mail to: New Orders, Superintendent of Documents, P.O. Box 371954, Pittsburgh, PA 15250–7954.

There are no restrictions on the republication of material appearing in the **Federal Register.**

How To Cite This Publication: Use the volume number and the page number. Example: 67 FR 12345.

SUBSCRIPTIONS AND COPIES

PUBLIC	
Subscriptions:	
Paper or fiche	**202–512–1800**
Assistance with public subscriptions	**202–512–1806**
General online information	**202–512–1530; 1–888–293–6498**
Single copies/back copies:	
Paper or fiche	**202–512–1800**
Assistance with public single copies	**1–866–512–1800 (Toll-Free)**
FEDERAL AGENCIES	
Subscriptions:	
Paper or fiche	**202–523–5243**
Assistance with Federal agency subscriptions	**202–523–5243**

What's NEW!

Federal Register Table of Contents via e-mail

Subscribe to FEDREGTOC, to receive the **Federal Register** Table of Contents in your e-mail every day.

If you get the HTML version, you can click directly to any document in the issue.

To subscribe, go to **http://listserv.access.gpo.gov** and select:

Online mailing list archives
FEDREGTOC-L
Join or leave the list

Then follow the instructions.

FEDERAL REGISTER WORKSHOP

THE FEDERAL REGISTER: WHAT IT IS AND HOW TO USE IT

FOR: Any person who uses the **Federal Register** and Code of Federal Regulations.

WHO: Sponsored by the Office of the Federal Register.

WHAT: Free public briefings (approximately 3 hours) to present:

1. The regulatory process, with a focus on the Federal Register system and the public's role in the development of regulations.
2. The relationship between the **Federal Register** and Code of Federal Regulations.
3. The important elements of typical **Federal Register** documents.
4. An introduction to the finding aids of the FR/CFR system.

WHY: To provide the public with access to information necessary to research Federal agency regulations which directly affect them. There will be no discussion of specific agency regulations.

WASHINGTON, DC

WHEN: July 23, 2002—9:00 a.m. to noon

WHERE: Office of the Federal Register
Conference Room
800 North Capitol Street, NW.
Washington, DC
(3 blocks north of Union Station Metro)

RESERVATIONS: 202–523–4538; or
info@fedreg.nara.gov

Printed on recycled paper.

Contents

Federal Register

Vol. 67, No. 124

Thursday, June 27, 2002

Agriculture Department
See Food and Nutrition Service
See Food Safety and Inspection Service
See Forest Service
NOTICES
Agency information collection activities:
Submission for OMB review; comment request, 43270–43271

Air Force Department
NOTICES
Privacy Act:
Systems of records, 43294

Alcohol, Tobacco and Firearms Bureau
PROPOSED RULES
Alcoholic beverages:
Malt beverages; labeling and advertising, 43495–43509

Antitrust Division
NOTICES
National cooperative research notifications:
3M Co. et al., 43342–43343
J Consortium, Inc., 43343
PKI Forum, Inc., 43343
Wireless Application Protocol Forum, Ltd., 43343–43344

Arts and Humanities, National Foundation
See National Foundation on the Arts and the Humanities

Centers for Disease Control and Prevention
NOTICES
Agency information collection activities:
Proposed collection; comment request, 43321–43322
Committees; establishment, renewal, termination, etc.:
Diabetes Prevention and Control Programs Translation Advisory Committee; charter renewal, 43322
Meetings:
Disease, Disability, and Injury Prevention and Control Special Emphasis Panels, 43322–43323

Coast Guard
RULES
Drawbridge operations:
Florida, 43252–43253
Navigation and navigable waters:
Captain of the Port Zones for Hampton Roads and Wilmington, NC, 43252

Commerce Department
See Economic Development Administration
See International Trade Administration
See National Oceanic and Atmospheric Administration

Commodity Futures Trading Commission
NOTICES
Agency information collection activities:
Proposed collection; comment request, 43285–43286

Customs Service
RULES
Merchandise, special classes:
Import restrictions—
Peru; archaeological and ethnological materials; correction, 43247

Defense Department
See Air Force Department
RULES
Federal Acquisition Regulation (FAR):
Claim definition and termination terms, 43512–43514
Federal Supply Schedule order disputes and incidental items, 43513–43516
Introduction, 43511–43513
Relocation costs, 43515–43520
Small Entity Compliance Guide, 43520–43521
Technical amendments, 43519–43521
PROPOSED RULES
Federal Acquisition Regulation (FAR):
Individuals with disabilities; Section 508 contract clauses, 43523–43524
NOTICES
Arms sales notification; transmittal letter, etc., 43286–43290
Federal Acquisition Regulation (FAR):
Agency information collection activities—
Submission for OMB review; comment request, 43290–43291
Meetings:
Actuaries Retirement Board, 43291
Education Benefits Board of Actuaries, 43291
Medicare-Eligible Retiree Health Care Board of Actuaries, 43291
Privacy Act:
Systems of records, 43291–43294

Drug Enforcement Administration
NOTICES
Applications, hearings, determinations, etc.:
Mallinckrodt, Inc., 43344
Rhodia Chirex America, 43345

Economic Development Administration
NOTICES
Trade adjustment assistance eligibility determination petitions:
MJM International, Inc., et al., 43276–43277

Education Department
NOTICES
Agency information collection activities:
Proposed collection; comment request, 43294–43295
Submission for OMB review; comment request, 43295–43296
Grants and cooperative agreements; availability, etc.:
Federal Pell Grant, Perkins Loan, Work-Study, Supplemental Educational Opportunity Grant, Family Education Loan, and William D. Ford Programs—
Federal need analysis methodology for 2003-2004 award year; correction, 43388
Jacob K. Javits Gifted and Talented Students Education Program; correction, 43296–43297

Meetings:
Foreign Medical Education and Accreditation National Committee, 43297

Energy Department
See Federal Energy Regulatory Commission
NOTICES
Floodplain and wetlands protection; environmental review determinations; availability, etc.:
Los Alamos National Laboratory, NM, 43298–43302
Meetings:
Environmental Management Site-Specific Advisory Board—
Oak Ridge Reservation, TN, 43302

Environmental Protection Agency
RULES
Pesticide programs:
Cyhalofop-butyl; correction, 43255–43256
NOTICES
Pesticide,food, and feed additive petitions:, 43310–43314
Pesticides; emergency exemptions, etc.:
Carbofuran, 43314–43316

Federal Aviation Administration
RULES
Airworthiness directives:
CFM International, 43232–43234
General Electric Co.; correction, 43229–43230
MD Helicopters, Inc., 43227–43229
Teledyne Continental Motors, 43230–43232
NOTICES
Environmental statements; availability, etc.:
T.F. Green Airport, RI; scoping meeting, 43382
Meetings:
RTCA Inc., 43382–43383
Passenger facility charges; applications, etc.:
Snobomish County Airport/Paine Field, WA, 43383

Federal Communications Commission
RULES
Television broadcasting:
Cable television relay service; eligibility requirements, 43257–43263
PROPOSED RULES
Radio broadcasting:
Broadcast and cable EEO rules and policies; en banc hearing, 43265

Federal Energy Regulatory Commission
NOTICES
Electric rate and corporate regulation filings:
Mt. Camel Cogen, Inc., et al., 43303–43305
San Diego Gas & Electric Co. et al., 43305
Hydroelectric applications, 43305–43307
Meetings:
Office of Energy Projects staff; site visit to St. Lawrence-FDR Power Project, 43307
National Register of Historic Places:
Programmatic agreement for managing properties; restricted service list—
Alabama Power Co., 43307–43309
Practice and procedure:
Off-the-record communications, 43309
Reports and guidance documents; availability, etc.:
Northeast Independent Systems Operator; Seams Resolution timeline and report; correction, 43309
Applications, hearings, determinations, etc.:
ANR Pipeline Co. et al., 43302
MDU Resources Group, Inc., 43302–43303

Federal Maritime Commission
NOTICES
Agreements filed, etc., 43316
Ocean transportation intermediary licenses:
Air Sea Containers, Inc., et al., 43316–43317
Binex Line Corp., et al., 43317
Trimex Logistics, Inc., et al., 43317–43318

Federal Reserve System
RULES
Home mortgage disclosure (Regulation C):
Miscellaneous amendments; staff interpretation, 43218–43227
Telephone application rule; technical amendment, 43217–43218
NOTICES
Banks and bank holding companies:
Change in bank control, 43318
Formations, acquisitions, and mergers, 43318
Privacy Act:
Systems of records, 43318–43320

Food and Drug Administration
RULES
Animal drugs, feeds, and related products:
Chlortetracycline, 43248–43252
Sponsor name and address changes—
Church & Dwight Co., Inc., 43247–43248
NOTICES
Agency information collection activities:
Proposed collection; comment request, 43323–43324
Food additive petitions:
Cyanotech Corp., 43324–43325
Food for human consumption:
Identity standards deviation; market testing permits—
Del Monte Corp., 43325
Iceberg Industries Corp., iceberg water, 43325–43326
Grants and cooperative agreements; availability, etc.:
Assuring Radiation Protection, 43326–43330
Reports and guidance documents; availability, etc.:
Prescription drug samples; donations to free clinics; draft guidance, 43330–43331
Providing regulatory submissions in electronic format; industry guidance, 43331–43332
Veterinary Medicinal Products, International Cooperation on Harmonisation of Technical Requirements for Registration—
Anthelmintics effectiveness; general and specific recommendations, 43332–43333

Food and Nutrition Service
RULES
Child nutrition programs:
Child and Adult Care Program—
Strengthen program integrity; legislative reform implementation, 43447–43494

Food Safety and Inspection Service
NOTICES
Agency information collection activities:
Proposed collection; comment request, 43271–43273

Forest Service
NOTICES
Environmental statements; notice of intent:
Manti-La Sal National Forest, UT, 43273–43274

Mt. Hood National Forest, OR, 43274–43276
Meetings:
Resource Advisory Committees—
Madera County, 43276
Siskiyou County, 43276

General Services Administration
RULES
Federal Acquisition Regulation (FAR):
Claim definition and termination terms, 43512–43514
Federal Supply Schedule order disputes and incidental items, 43513–43516
Introduction, 43511–43513
Relocation costs, 43515–43520
Small Entity Compliance Guide, 43520–43521
Technical amendments, 43519–43521
PROPOSED RULES
Federal Acquisition Regulation (FAR):
Individuals with disabilities; Section 508 contract clauses, 43523–43524
NOTICES
Federal Acquisition Regulation (FAR):
Agency information collection activities—
Submission for OMB review; comment request, 43290–43291

Government Ethics Office
NOTICES
Criminal conflict of interest statutes; review, 43321

Health and Human Services Department
See Centers for Disease Control and Prevention
See Food and Drug Administration
See Substance Abuse and Mental Health Services Administration
NOTICES
Meetings:
Vital and Health Statistics National Committee, 43321

Interior Department
See National Indian Gaming Commission
NOTICES
Meetings:
Delaware & Lehigh National Heritage Corridore Commission, 43337

International Trade Administration
NOTICES
Antidumping:
Folding metal tables and chairs from—
China, 43277–43278
Fresh tomatoes from—
Mexico, 43278–43280
Export trade certificates of review, 43280–43281
Grants and cooperative agreements; availability, etc.:
International Buyers Program; domestic trade shows support (FY 2004), 43281–43283
Applications, hearings, determinations, etc.:
Cold-rolled carbon steel flat products from—
Netherlands, 43280

International Trade Commission
NOTICES
Import investigations:
Clay target throwing machines and components thereof, 43337
Integrated circuits, processes for making same, and products containing same, 43338–43340
Polyethylene terephthalate film, sheet, and strip from—
India and Taiwan, 43340
Structural steel beams from—
Various countries, 43340

Justice Department
See Antitrust Division
See Drug Enforcement Administration
NOTICES
Pollution control; consent judgments:
Fruit of the Loom, Inc., 43341
Magnan, Henry J., 43341
Senior Executive Service:
Performance Review Boards; membership, 43341–43342

Labor Department
See Occupational Safety and Health Administration

Maritime Administration
NOTICES
Agency information collection activities:
Submission for OMB review; comment request, 43383–43384
Coastwise trade laws; administrative waivers; deadline, 43384–43385

Merit Systems Protection Board
NOTICES
Opportunity to file amicus briefs:
Abrahamsen, Kevin D. v. Department of Veterans, 43347–43349

National Aeronautics and Space Administration
RULES
Federal Acquisition Regulation (FAR):
Claim definition and termination terms, 43512–43514
Federal Supply Schedule order disputes and incidental items, 43513–43516
Introduction, 43511–43513
Relocation costs, 43515–43520
Small Entity Compliance Guide, 43520–43521
Technical amendments, 43519–43521
PROPOSED RULES
Federal Acquisition Regulation (FAR):
Individuals with disabilities; Section 508 contract clauses, 43523–43524
NOTICES
Federal Acquisition Regulation (FAR):
Agency information collection activities—
Submission for OMB review; comment request, 43290–43291

National Archives and Records Administration
RULES
Public availability and use:
NARA facilities; addresses and hours, 43254–43255
Technical amendments, 43253–43254
NOTICES
Agency records schedules; availability, 43350–43356

National Foundation on the Arts and the Humanities
NOTICES
Meetings:
Leadership Initiatives Advisory Panel, 43356–43357

National Indian Gaming Commission
RULES
Management contract provisions:
Minimum internal control standards, 43389–43445

National Oceanic and Atmospheric Administration
PROPOSED RULES
Fishery conservation and management:
Atlantic highly migratory species—
Atlantic bluefin tuna, 43266–43269
Magunuson-Stevens Act provisions—
Domestic fisheries; exempted fishing permit applications, 43265–43266
NOTICES
Meetings:
Gulf of Mexico Fishery Management Council, 43283
Permits:
Marine mammals, 43283–43285

Nuclear Regulatory Commission
NOTICES
Agency information collection activities:
Proposed collection; comment request, 43357
Submission for OMB review; comment request, 43357–43358
Applications, hearings, determinations, etc.:
Foster Wheeler Environmental Corp., 43358–43359

Occupational Safety and Health Administration
NOTICES
Agency information collection activities:
Proposed collection; comment request, 43345–43347

Public Health Service
See Centers for Disease Control and Prevention
See Food and Drug Administration
See Substance Abuse and Mental Health Services Administration

Railroad Retirement Board
NOTICES
Agency information collection activities:
Proposed collection; comment request, 43359–43360

Securities and Exchange Commission
RULES
Securities:
Security futures products trading; application of Federal securities laws provisions, 43234–43247
NOTICES
Meetings; Sunshine Act, 43363–43364
Self-regulatory organizations; proposed rule changes:
National Association of Securities Dealers, Inc., 43364–43367
Pacific Exchange, Inc., 43367–43372
Philadelphia Stock Exchange, Inc., 43372–43377
Applications, hearings, determinations, etc.:
Jackson National Life Insurance Co. of New York, et al., 43360–43363

State Department
PROPOSED RULES
Exchange Visitor Program:
Professor and research scholar participation, 43264–43265
NOTICES
Grants and cooperative agreements; availability, etc.:
Mexico; post-secondary educational opportunities, 43379–43382
Mexico, Central America and the Caribbean Regional Educational Advising Coordinator Program, 43377–43379

Substance Abuse and Mental Health Services Administration
NOTICES
Grant and cooperative agreement awards:
Brigham and Women's Hospital, Harvard University, 43333
National Families in Action, Inc., 43333–43334
Grants and cooperative agreements; availability, etc.:
Mental Health Services Center—
Targeted Capacity Expansion; National Technical Assistance Center for Mental Health Services Needs of Older Adults, 43334–43335
National Center for Child Traumatic Stress, 43335–43337

Transportation Department
See Coast Guard
See Federal Aviation Administration
See Maritime Administration
See Transportation Statistics Bureau

Transportation Statistics Bureau
NOTICES
Grants and cooperative agreements; availability, etc.:
Transportation Statistics Research Program, 43385–43386

Treasury Department
See Alcohol, Tobacco and Firearms Bureau
See Customs Service

Veterans Affairs Department
NOTICES
Agency information collection activities:
Submission for OMB review; comment request, 43386–43387

Separate Parts In This Issue

Part II
Interior Department, National Indian Gaming Commission, 43389–43445

Part III
Agriculture Department, Food and Nutrition Service, 43447–43494

Part IV
Treasury Department, Alcohol, Tobacco and Firearms Bureau, 43495–43509

Part V
Defense Department; General Services Administration; National Aeronautics and Space Administration, 43511–43521

Part VI
Defense Department; General Services Administration; National Aeronautics and Space Administration, 43523–43524

Reader Aids
Consult the Reader Aids section at the end of this issue for phone numbers, online resources, finding aids, reminders, and notice of recently enacted public laws.

To subscribe to the Federal Register Table of Contents LISTSERV electronic mailing list, go to http://listserv.access.gpo.gov and select Online mailing list archives, FEDREGTOC-L, Join or leave the list (or change settings); then follow the instructions.

CFR PARTS AFFECTED IN THIS ISSUE

A cumulative list of the parts affected this month can be found in the Reader Aids section at the end of this issue.

7 CFR
226 43448

12 CFR
203 (2 documents) 43217, 43218

14 CFR
39 (4 documents) 43227, 43229, 43230, 43232

17 CFR
231 43234
241 43234

19 CFR
12 43247

21 CFR
510 43247
520 43247
558 43248

22 CFR
Proposed Rules:
62 43264

25 CFR
542 43390

27 CFR
Proposed Rules:
7 43496

33 CFR
3 43252
117 43252

36 CFR
1228 43253
1250 43253
1253 43254
1254 43253

40 CFR
180 43255

47 CFR
78 43257
Proposed Rules:
73 43265
76 43265

48 CFR
Chapter 1 (2 documents) 43512, 43521
2 43513
8 43514
17 43513
31 (2 documents) 43513, 43516
33 43513
49 43513
51 43514
52 (2 documents) 43513, 43520
Proposed Rules:
39 43524
52 43524

50 CFR
Proposed Rules:
600 43265
635 43266

Rules and Regulations

Federal Register

Vol. 67, No. 124

Thursday, June 27, 2002

This section of the FEDERAL REGISTER contains regulatory documents having general applicability and legal effect, most of which are keyed to and codified in the Code of Federal Regulations, which is published under 50 titles pursuant to 44 U.S.C. 1510.

The Code of Federal Regulations is sold by the Superintendent of Documents. Prices of new books are listed in the first FEDERAL REGISTER issue of each week.

FEDERAL RESERVE SYSTEM

12 CFR Part 203

[Regulation C; Docket No. R–1120]

Home Mortgage Disclosure

AGENCY: Board of Governors of the Federal Reserve System.

ACTION: Final rule; technical amendment.

SUMMARY: The Board is publishing amendments to Regulation C (Home Mortgage Disclosure). The amendments require lenders to ask applicants their race or national origin and sex in applications taken by telephone, conforming the telephone application rule to the rule applicable to mail and Internet applications.

DATES: The amendments are effective January 1, 2003.

FOR FURTHER INFORMATION CONTACT: John C. Wood, Counsel, Kathleen C. Ryan, Senior Attorney, or Dan S. Sokolov, Attorney, Division of Consumer and Community Affairs, Board of Governors of the Federal Reserve System, Washington, DC 20551, at (202) 452–3667 or (202) 452–2412. For users of Telecommunications Device for the Deaf (TDD) *only*, contact (202) 263–4869.

SUPPLEMENTARY INFORMATION:

I. Background

The Home Mortgage Disclosure Act (HMDA) requires certain depository and for-profit nondepository institutions to collect, report, and publicly disclose data about originations and purchases of home mortgage and home improvement loans. Institutions must also report data about applications that do not result in originations. The Board's Regulation C implements HMDA.

On January 23, 2002, the Board approved a final rule amending Regulation C, effective January 1, 2003. 67 FR 7222, February 15, 2002. The Board subsequently delayed the effective date of the amendments from January 1, 2003, until January 1, 2004. 67 FR 30771, May 8, 2002.

At the same time that the final rule was published, the Board issued a proposed rule for comment on three items related to the final rule: (1) The appropriate thresholds for purposes of reporting pricing data on loan originations; (2) whether lenders should report lien status; and (3) whether lenders should be required to ask applicants for monitoring information on ethnicity, race, and sex in applications taken entirely by telephone. 67 FR 7252, February 15, 2002.

The Board has issued a final rule, adopting the three proposed items, in a notice published elsewhere in today's **Federal Register**. For reasons discussed in that notice, the revised rule regarding the collection of monitoring information about ethnicity, race, and sex is effective as of January 1, 2003. Because the final rule published today amends the revised regulation—which does not take effect until January 1, 2004—the Board is publishing a rule with respect to monitoring information, set forth in this notice, to cover the period from January 1, 2003, to December 31, 2003. The rule amends the portions of the current Appendices A and B to Regulation C that set forth instructions for collecting monitoring information in telephone applications.

Thus, for applications taken beginning January 1, 2003, lenders must ask telephone applicants for monitoring information under Appendix A, Paragraph V.D.2, and Appendix B, Paragraph I.B.4., as revised by the Board in this notice. For these applications, lenders must use the race or national origin categories in current Appendix A, Paragraph V.D.3., and in the sample data collection form in current Appendix B. For applications taken on or after January 1, 2004, lenders are required to ask telephone applicants for monitoring information under Appendix A, Paragraph I.D.2., and Appendix B, Paragraph II.A., as revised in the notice published elsewhere in today's **Federal Register**, using the revised ethnicity and race categories in Appendix A, Paragraphs I.D.3. and 4., and the sample data collection form in Appendix B approved by the Board on January 23, 2002.

List of Subjects in 12 CFR Part 203

Banks, banking, Mortgages, Reporting and recordkeeping requirements.

For the reasons set forth in the preamble, the Board amends 12 CFR Part 203 as follows:

PART 203—HOME MORTGAGE DISCLOSURE (REGULATION C)

1. The authority citation for part 203 continues to read as follows:

Authority: 12 U.S.C. 2801–2810.

2. Appendix A is amended by revising Paragraph V.D.2. to read as follows:

Appendix A to Part 203—Form and Instructions for Completion of HMDA Loan/Application Register

* * * * *

V. Instructions for Completion of Loan/Application Register

* * * * *

D. Applicant Information—Race or National Origin, Sex, and Income

* * * * *

2. *Mail, Internet, or Telephone Applications.* All loan applications, including applications taken by mail, Internet, or telephone, must use a collection form similar to that shown in appendix B regarding race or national origin and sex. For applications taken by telephone, the information in the collection form must be stated orally by the lender, except for information that pertains uniquely to applications taken in writing. If the applicant does not provide these data in an application taken by mail, Internet or telephone, enter the code for ''information not provided by applicant in mail or telephone application'' specified in paragraphs V.D.3. and 4. of this appendix. (*See* appendix B for complete information on the collection of these data in mail, Internet, or telephone applications.)

* * * * *

3. Appendix B is amended by revising paragraph I.B.4. to read as follows:

Appendix B to Part 203—Form and Instructions for Data Collection on Race or National Origin and Sex

* * * * *

I. Instructions on collection of data on race or national origin and sex

* * * * *

B. Procedures

* * * * *

4. You must ask the applicant for this information (but you cannot require the applicant to provide it) whether the application is taken in person, by mail or telephone, or on the Internet. For

applications taken by telephone, the information in the collection form must be stated orally by the lender, except for that information which pertains uniquely to applications taken in writing. You need not provide the data when you take an application by mail or telephone or on the Internet, if the applicant fails to answer. You should indicate whether an application was received by mail, telephone, or the Internet, if it is not otherwise evident on the face of the application.

* * * * *

By order of the Board of Governors of the Federal Reserve System, acting through the Secretary of the Board under delegated authority, June 21, 2002.

Jennifer J. Johnson,

Secretary of the Board.

[FR Doc. 02–16189 Filed 6–26–02; 8:45 am]

BILLING CODE 6210–01–P

FEDERAL RESERVE SYSTEM

12 CFR Part 203

[Regulation C; Docket No. R–1120]

Home Mortgage Disclosure

AGENCY: Board of Governors of the Federal Reserve System.

ACTION: Final rule; staff interpretation.

SUMMARY: The Board is publishing amendments to Regulation C (Home Mortgage Disclosure). The amendments establish the thresholds for determining the loans for which financial institutions must report loan pricing data (the spread between the annual percentage rate on a loan and the yield on comparable Treasury securities) as required under a final rule approved in January 2002; the thresholds are a spread of 3 percentage points for first-lien loans and 5 percentage points for subordinate-lien loans. The amendments require lenders to report the lien status of a loan or application. The amendments also require that lenders ask applicants their ethnicity, race, and sex in applications taken by telephone; this monitoring requirement is made applicable as of January 1, 2003, through a rule published elsewhere in today's **Federal Register**.

DATES: The amendments are effective January 1, 2004.

FOR FURTHER INFORMATION CONTACT: John C. Wood, Counsel, Kathleen C. Ryan, Senior Attorney, or Dan S. Sokolov, Attorney, Division of Consumer and Community Affairs, Board of Governors of the Federal Reserve System, Washington, DC 20551, at (202) 452–3667 or (202) 452–2412. For users of Telecommunications Device for the Deaf (TDD) *only*, contact (202) 263–4869.

SUPPLEMENTARY INFORMATION:

I. Background

The Home Mortgage Disclosure Act (HMDA) (12 U.S.C. 2801–2810) has three purposes. One is to provide the public and government officials with data that will help show whether lenders are serving the housing needs of the neighborhoods and communities in which they are located. A second purpose is to help public officials target public investment to promote private investment where it is needed. A third purpose is to provide data that assist in identifying possible discriminatory lending patterns and enforcing antidiscrimination statutes.

HMDA accordingly requires certain depository and for-profit nondepository lenders to collect, report, and publicly disclose data about originations and purchases of loans secured by residential real property and of home improvement loans. Lenders must also report data about applications that did not result in originations.

The Board's Regulation C implements HMDA. Regulation C generally requires that lenders report data about:

- *Each application or loan*, including the application date; the action taken and the date of that action; the loan amount; the loan type and purpose; and, if the loan is sold, the type of purchaser;
- *Each applicant or borrower*, including ethnicity, race, sex, and income; and
- *Each property*, including location and occupancy status.

Lenders report this information to their supervisory agencies on an application-by-application basis using a loan application register format (HMDA/LAR). Lenders must make their HMDA/LARs—with certain fields redacted to preserve applicants' privacy—available to the public. The Federal Financial Institutions Examination Council (FFIEC), acting on behalf of the supervisory agencies, compiles the reported information and prepares an individual disclosure statement for each institution. The FFIEC also aggregates data and prepares reports for all lenders in each metropolitan area and for the nation. These disclosure statements and reports are available to the public.

On January 23, 2002, the Board approved amendments to Regulation C after a comprehensive review of the regulation. 67 FR 7222, February 15, 2002. Among other things, the final rule requires lenders to report the spread between the APR on loans and the yield on Treasury securities with comparable maturity periods, if the spread meets or exceeds certain thresholds specified by the Board.

At the same time that the final rule was published, the Board issued a proposed rule for comment on whether thresholds of 3 percentage points above the yield on comparable Treasury securities for first-lien loans and 5 percentage points for subordinate-lien loans (which generally have a higher APR) are appropriate thresholds for identifying the loans for which financial institutions must report loan pricing data. 67 FR 7252, February 15, 2002. The Board also proposed to require lenders (1) to report the lien status on loans and applications and (2) to ask telephone applicants their ethnicity, race, and sex.

The Board received approximately 250 comments on the proposed rule; commenters were generally divided on the issues. Industry commenters provided differing views on the appropriate thresholds for reporting pricing data and on the burden associated with reporting lien status. They were generally opposed to the proposed collection of applicants' ethnicity, race, and sex in telephone applications.

Commenters representing community groups, researchers, and state, local and tribal officials generally urged the Board to require lenders to report pricing information on all loans. These commenters supported the reporting of lien status for originations and applications, and argued for extending the requirement to purchased loans. They believed that lenders should be required to ask for applicants' ethnicity, race, and sex in telephone applications.

Many industry commenters, in addition to commenting on the proposed rule, also requested a delay in the effective date of the final rule published on February 15, 2002. On May 2, 2002, the Board delayed the effective date of the final rule to January 1, 2004. Lenders must, however, use the census tract numbers and corresponding geographic areas from the 2000 Census for all applications and loans recorded on their 2003 HMDA/LAR and reported to the supervisory agencies by March 1, 2004. 67 FR 30771, May 8, 2002.

Industry commenters also requested guidance on how to collect and report data when an application is received before—and final action is taken after—January 1, 2004, the effective date of the revised rule. In some instances, several months may elapse between application and final action, and applications taken in 2003 may not be acted upon until 2004.

Lenders generally must comply with the revised rules for all applications upon which final action is taken on and after January 1, 2004. The Board plans

to issue guidance later this year to alleviate the burden on lenders to ''look back'' at all applications taken in 2003 but acted on in 2004. For example, the Board could establish that for applications taken before a certain date—such as November 1, 2003—a lender would not be required to use the revised rules.

II. Section-by-Section Analysis of the Final Rule

The following discussion generally tracks the regulation (including appendices) as amended by the Board. Revisions to the staff commentary are addressed under the sections of the regulation that they interpret.

Section 203.2—Definitions

2(i) Manufactured Home

Commenters asked whether the definition of a manufactured home in § 203.2(i) includes modular, panelized, and pre-cut homes. The definition in § 203.2 refers to the federal building code for factory-built housing established by the Department of Housing and Urban Development (HUD). The HUD code requires generally that housing be essentially ready for occupancy upon leaving the factory and being transported to a building site. Modular homes that meet all of the HUD code standards are included in the definition because they are ready for occupancy upon leaving the factory. Other factory-built homes, such as panelized and pre-cut homes, generally do not meet the HUD code because they require a significant amount of construction on site before they are ready for occupancy. Loans and applications relating to manufactured homes that do not meet the HUD code should not be identified as manufactured housing under HMDA. Comment 203.2(i)–1 contains this guidance.

Section 203.4—Compilation of Loan Data

4(a)(12) Rate Spread Information

The Board proposed a reporting threshold of 3 percentage points above the yield on Treasury securities of comparable maturity for first-lien loans and 5 percentage points for subordinate-lien loans (which generally have a higher APR). The thresholds are intended to ensure, to the extent possible, that pricing data for higher-cost loans are collected and disclosed. The data available to the Board when it proposed the thresholds indicated that these thresholds would exclude the vast majority of prime loans and include the vast majority of other loans. The Board solicited comment on the appropriate thresholds before finalizing them. Information on the following specific issues and questions was also solicited:

- Whether the rule for determining coverage under the Home Ownership and Equity Protection Act (HOEPA) should be used to determine whether rate spread information must be reported under HMDA—specifically, whether the 15th day of the month preceding the month in which the application for the loan was received should be used for determining the APR spread.
- The proportion of loan originations (by number of loans) reported under HMDA that would fall above and below various thresholds, segregated by risk class (for example, A, A-minus, and B) and lien status.
- Circumstances or special credit products that might be particularly subject to misclassification, as loans associated with a higher credit risk than prime loans, should the proposed thresholds be implemented. For example, are there product lines in which loans with very little credit risk nonetheless have high APRs? Alternatively, are there product lines in which loans with relatively high credit risk nonetheless have low APRs?
- Is the 2-percentage point difference between the proposed thresholds for first- and subordinate-lien loans appropriate?

Some industry commenters supported the thresholds of 3 and 5 percentage points, although they objected to reporting any pricing data. These commenters stated that, based on their experience, the tentative thresholds would exclude nearly all prime loans from the pricing-data reporting. Nearly all industry commenters—whether or not they supported thresholds of 3 and 5 percentage points—indicated that a 2-percentage point difference between thresholds is appropriate.

Many industry commenters argued that the proposed thresholds were too low, based on a belief that the thresholds would capture a significant number of prime loans. Some commenters stated that the proposed thresholds would include loans that they believe are not higher-priced loans, for example, short-term loans with balloon payments, loans involving manufactured homes, and FHA-insured and VA-guaranteed loans. These commenters did not, however, provide data to support their views. Industry commenters also expressed concern that stigma would attach to loans that meet the pricing thresholds and that responsible subprime lending would consequently be curtailed.

Some commenters urged the Board to adopt the thresholds for HOEPA coverage (8 percentage points for first-lien loans and 10 percentage points for subordinate-lien loans) for reporting pricing information under Regulation C. Others suggested thresholds of 5 percentage points and 7 percentage points for first- and subordinate-lien loans, respectively, so as to capture only what they believe to be higher-priced loans.

In addition to commenting on the proposed thresholds, many industry commenters urged the Board to reverse its decision to require lenders to report pricing information under HMDA. Some of these commenters stated that, in the alternative, the Board should allow lenders the option of reporting the APR on a loan and having the Board calculate the spread. They said that reporting the spread would be more burdensome than reporting the APR, because lenders do not track the yield on Treasury securities and may have difficulty obtaining the correct information to use in calculating the spread. Commenters were concerned that lenders could make inadvertent errors in calculating the spread and, if the errors were pervasive, could incur the costs of resubmission of HMDA data or civil money penalties.

A few industry commenters urged the Board not to use the yield on Treasury securities for calculating the spread. They suggested that lenders be permitted to use other indices for calculating the spread, such as the LIBOR (London Inter-Bank Offered Rate) index, that they said play a more direct role in their pricing.

Still others—community groups, researchers, and state, local, and tribal officials—urged the Board to require pricing information on all loans reported under HMDA, and not just those that meet or exceed certain thresholds. These commenters believed that requiring pricing information only on higher-priced loans would allow discrimination and other abusive lending practices to go undetected in the prime market. Some of these commenters also argued that the APR, and not the spread, should be reported to facilitate fair lending enforcement. Some community groups, while preferring pricing information on all loans, stated that the thresholds of 3 and 5 percentage points were appropriate.

The Board is adopting the proposed thresholds of 3 and 5 percentage points for first- and subordinate-lien loans, respectively. In January 2002, the Board adopted the requirement to report the spread only for loans over specific thresholds in order to adjust pricing

data for changes in market conditions over time, focus on higher-cost loans, and limit reporting burden (because fewer loans would be subject to the reporting requirement). The data supplied by commenters tended to confirm the data available to the Board indicating that the proposed thresholds would avoid capturing the vast majority of prime loans while capturing the vast majority of other loans.

The Board believes that the thresholds will not result in misclassification of the products mentioned by some commenters—for example, FHA-insured loans, VA-guaranteed loans and manufactured home loans. While the spread on many manufactured home loans may exceed the thresholds, these loans tend to have elevated credit risk and are generally not considered prime loans. The thresholds should exclude most FHA-insured loans and VA-guaranteed loans. Moreover, Regulation C requires lenders to distinguish FHA and VA loans from other loan types on their HMDA/LARs; and under the final rules, lenders will also be required to distinguish loans for manufactured homes from loans for site-built homes. Thus, even if these loans are misclassified as higher-priced loans, data users can treat these loans as distinct product lines in their analyses.

The Board will take steps to minimize any difficulties lenders may have in calculating the spread and also to minimize the risk of errors. These steps include publishing the applicable Treasury yields for common maturity periods on the FFIEC's Internet web site, in addition to making the information available by fax upon request. Lenders will be required to use only the rates published by the Board—and not the H–15 or the Treasury auction results, which lenders may use for HOEPA purposes—to ensure consistent and accurate calculations for HMDA data collection and reporting. An interactive tool could also be available on the FFIEC Web site to calculate the rate spread for a loan, based on information input by the lender.

The final regulation approved in January set an ''application date'' rule for determining whether the rate spread must be reported. That is, lenders would compare the APR on a loan at consummation with the yield on Treasury securities of comparable maturity as of the 15th day of the month preceding the month in which the loan application was received. This is the rule used to determine HOEPA coverage. The Board solicited comment on whether HOEPA's application date rule is appropriate in calculating the spread for HMDA purposes.

Many industry commenters, including the banking trade associations, supported use of the application date for identifying the applicable Treasury security yield. They noted that adopting the HOEPA rule would ease compliance burden, as lenders whose loans are covered by HOEPA are already familiar with this rule. Other industry commenters suggested that the ''lock date,'' or date that the lender sets the interest rate for the loan, would result in a more accurate determination of whether a loan was a prime loan or a higher-priced loan. A small number of industry commenters suggested using the date of origination or consummation.

The Board is adopting the date the final interest rate is set as the date for determining the yield on comparable Treasury securities. The rule provides that lenders use the 15th-of-the-month prior to the date the final rate is set. For example, if the lender sets the interest rate for the final time before the loan closing on September 3, 2004, the relevant date for use of the Board's table is August 15, 2004; if the lender sets the rate for the final time before closing on September 17, 2004, the relevant date is September 15, 2004. If the rate is set on September 15, 2004, the relevant date is September 15, 2004. These instructions have been incorporated into Appendix A, Paragraphs I.G.1. and 2.

The date the final rate is set more accurately reflects the lender's pricing decision than a date related to the date of application or to the date of consummation. A date related to the date of application or consummation might reflect a different rate environment than existed when the final interest rate was established, and could result in inaccurate and misleading data for periods when interest rates are volatile.

Using the date the final rate is set may impose additional burden on some lenders, as many lenders do not systematically track the date the interest rate is set or locked. In contrast, using the HOEPA rule (a date measured from the application date) may impose less burden on lenders that currently make HOEPA loans or routinely monitor their loans for HOEPA coverage (although it does not pose that advantage for lenders that do not make HOEPA loans); and the dates of application and consummation also may be less burdensome because these dates are already collected and reported under HMDA. On balance, however, the Board believes that the benefits of increasing the accuracy of pricing information by selecting the date the final interest rate is set outweigh the compliance burden associated with the requirement.

Section 4(a)(12) is also modified to clarify that lenders must report the rate spread on a loan if the spread equals or exceeds the thresholds. This change conforms the regulation to the instructions for reporting rate-spread information in Appendix A, Paragraph I.G.1.

4(a)(14) Lien Status

The Board proposed to require lenders to report whether a loan is or would be (1) secured by a first lien on a dwelling; (2) secured by a subordinate lien on a dwelling; or (3) not secured by a lien on a dwelling. The Board solicited comment on these reporting categories (and also on whether reporting of lien status should be required for purchased loans). Data on lien status may help explain some pricing disparities, because interest rates, and therefore APRs, vary according to lien status. Rates on first-lien loans are generally lower than rates on subordinate-lien or unsecured loans. In addition, lien status would enable data users to better analyze information on secured and unsecured home improvement loans.

Most industry commenters—although opposed generally to reporting more data under HMDA—stated that lien status was closely linked to pricing and that it would not be unduly burdensome for them to report this information for originations on their HMDA/LAR. Most industry commenters, however, opposed a requirement to collect and report these data for purchased loans, because they believe the additional burden is not warranted. Some commenters stated that lien status should not be required for applications that do not result in loans; they suggested that an application might be denied before the lender knows what the lien status of the loan would have been.

Other industry commenters opposed the requirement to report lien status even for originations as unduly burdensome. These commenters stated that while they know when a loan they make is secured, they often do not know their lien position with certainty. They were concerned that a final rule would require title searches for all reportable loans. Some commenters stated that they generally assume they will have a first lien for all home purchase applications and loans; but for other home mortgages, often they do not know their lien position even if the loan is originated, and base their pricing decisions on the assumption that they will have a subordinate lien. A few commenters suggested that the Board

should allow lenders to report lien status based on these assumptions.

Community groups, researchers, and state, local, and tribal officials stated that lien status was critical to interpreting pricing data and distinguishing secured from unsecured home improvement loans, and many argued that lien status should be reported for purchased loans as well. Some of these commenters suggested that the data collection might serve to deter lenders from persuading consumers to consolidate a small first mortgage and unsecured debt into a new first mortgage (when a second mortgage or an unsecured loan might be more in the consumer's interest). Some also stated that data on lien status for purchased loans would facilitate monitoring of the activities of subprime lenders that purchase loans which may be unfairly priced, and for which little data are available.

The final rule requires lenders to report lien status on applications and originations, but not on purchased loans. Conforming changes have been made to the HMDA/LAR and the HMDA/LAR Code Sheet in Appendix A. Lien status on loan originations will help the public and the agencies interpret the pricing information. Collecting lien status on loan originations will enable data users to differentiate between secured and unsecured home improvement loans, and will facilitate fair lending data analysis.

Lien status for applications that do not result in originations is also important information in the analysis of acceptance and denial ratios for borrowers of different races. Disparities by race or ethnicity in acceptance and denial ratios that initially suggest unlawful discrimination are often explained by differences in the lien status of the loan for which application was made, but only after significant effort is expended to retrieve information on lien status from individual loan files.

Lenders are required to report the lien status according to the best information readily available to them at the time final action is taken on an application. A comment has been added to the staff commentary, clarifying that Regulation C does not require lenders to conduct title searches solely for HMDA reporting purposes. Lenders may rely on the title search they routinely require for home purchase loans; lenders may also rely on other information readily available to them and that they reasonably believe to be accurate, such as the applicant's credit report or the applicant's statement on the application. For example, a lender would report a loan origination as secured by a subordinate lien if the application states that there is a mortgage on the property (and the mortgage will not be paid off as part of the transaction). If the same application did not result in an origination—for example, because the application is denied or withdrawn—the lender would report the application as an application for a subordinate-lien loan.

The final rule does not require lenders to collect and report lien status for loans that they purchase. Pricing information is not required for purchased loans, nor is information on ethnicity, race, and sex. Thus, the utility of lien-status data on purchased loans would be limited and would not justify the additional reporting burden.

Appendix A to Part 203—Form and Instructions for Completion of HMDA Loan/Application Register

In the final rules, the instructions for completing the HMDA/LAR provide three codes for indicating whether a loan or application relates to a preapproval request as defined in § 203.2(b). Codes 1 and 2 indicate whether a preapproval for a home purchase loan was requested. Because only preapprovals for home purchase loans are covered under the final rule, lenders use code 3, ''not applicable,'' for refinancings and home improvement loans and applications and for purchased loans of any type. Commenters asked what code should be used for home purchase applications and loans if a lender does not have a preapproval program as defined in § 203.2(b). Appendix A has been changed to clarify that code 3 should be used for home purchase loans and applications if the lender does not offer covered preapprovals.

Instructions for calculating the rate spread and for reporting lien status have been added to Appendix A, as discussed above under §§ 203.4(a)(12) and (14). The HMDA/LAR and the HMDA/LAR Code Sheet have been modified to reflect the requirement in § 203.4(a)(14) to report lien status. Appendix A has also been modified to reflect the revised rules regarding collection of ethnicity, race, and sex in applications taken by telephone, discussed under Appendix B below.

Appendix B to Part 203—Form and Instructions for Data Collection on Ethnicity, Race, and Sex

The Board proposed to conform the telephone application rule regarding ethnicity, race, and sex to the rule applicable to mail and Internet applications. There has been a substantial decline in response rates regarding race and ethnicity. From 1993 to 2000, the proportion of home mortgage loan applications of all types with missing race or ethnicity data increased from about 8 percent to about 28 percent. (Missing data about the applicant's sex have increased in a similar fashion.) At least part of this decline may be explained by an apparent increase in lenders' use of the telephone to take applications. The Board solicited comment on the benefits and burdens of this proposal.

Commenters were divided on whether lenders should be required to ask for ethnicity, race, and sex in telephone applications. Community groups, researchers, and state, local, and tribal officials urged the Board to require lenders to ask for such information on telephone applications. Many of these commenters pointed out that without the information, fair lending analyses based on HMDA data are less effective. These commenters also believe that the number of applications taken by telephone will continue to grow and, thus, that the rate of applications and loans missing information about ethnicity, race, and sex will increase as well. Some industry commenters supported the proposal, stating that it was simpler to have one rule on collection of ethnicity, race, and sex that applies regardless of the manner in which an application is taken.

On the other hand, many other industry commenters opposed the proposal because they believe that applicants will resent the intrusion into an area they regard as confidential or sensitive. Some commenters believe that applicants will fear discrimination, and will not pursue an application, will refuse to supply the information, or will supply incorrect information. Still others said that requiring lenders to ask for information about ethnicity, race, and sex would raise the cost of taking telephone applications. A few commenters asked the Board to provide a script for requesting the information in telephone applications.

The final rule requires lenders to ask for applicants' ethnicity, race, and sex in telephone applications. This amendment will serve the fair lending enforcement purpose of HMDA by improving the data obtained on ethnicity, race, and sex; the Board believes this benefit outweighs the costs of compliance.

The Board is making the amended rule applicable as of January 1, 2003, through a rule published elsewhere in today's **Federal Register**. Although for at least some lenders the cost of implementing the telephone rule in

2003 may be somewhat greater than the cost of implementing it in 2004, the Board believes that the cost difference is justified by the need to try to stem the increasing rate of missing data.

The final rule conforms the procedures for requesting applicant information in telephone applications to those for applications taken by mail or on the Internet. Generally, loan applicants must be advised that requesting information about ethnicity, race, and sex is mandated by the federal government to assist in the enforcement of fair lending laws. In addition, applicants must be advised that the lenders are prohibited from discriminating on the basis of the information provided, or on the basis of the applicant's choosing to provide or not provide the information.

For applications taken beginning January 1, 2003, lenders are required to ask telephone applicants for monitoring information using the national origin or race categories in the current Appendices A and B, as set forth in a notice published elsewhere in today's **Federal Register**. For applications taken by telephone on or after January 1, 2004, lenders are required to ask for monitoring information using the ethnicity and race categories in revised Appendices A and B.

III. Paperwork Reduction Act

In accordance with the Paperwork Reduction Act of 1995 (44 U.S.C. 3506; 5 CFR 1320 Appendix A.1), the Board reviewed the rule under the authority delegated to the Board by the Office of Management and Budget. The Federal Reserve may not conduct or sponsor, and an organization is not required to respond to, this information collection unless it displays a currently valid OMB control number. The OMB control number is 7100–0247 for the Federal Reserve's information collection under Regulation C.

The mandatory collection of information that is revised by this rulemaking is found in 12 CFR part 203, which implements 12 U.S.C. 2801–2810. Public officials use this information to determine whether financial institutions are serving the housing needs of their communities; to help target public investment to promote private investment where it is needed; and to identify possible discriminatory lending patterns for enforcement of antidiscrimination statutes.

The respondents are all financial institutions, depositories and non-depositories, that meet the tests for coverage under the regulation. Depository institutions with offices in metropolitan areas whose assets are below an asset size threshold (currently $32 million) that adjusts yearly are not required to comply. Under the Paperwork Reduction Act the Federal Reserve accounts for the burden of the paperwork associated with the regulation only for state member banks, their subsidiaries, subsidiaries of bank holding companies, U.S. branches and agencies of foreign banks (other than federal branches, federal agencies, and insured state branches of foreign banks), commercial lending companies owned or controlled by foreign banks, and organizations operating under section 25 or 25A of the Federal Reserve Act (12 U.S.C. 601–604a; 611–631). Other federal agencies account for the paperwork burden for the institutions they supervise. Respondents must maintain their HMDA/LARs and modified HMDA/LARs for three years, and their disclosure statements for five years.

The final rule has three principal elements. In January 2002, the Board approved several amendments to Regulation C, including one that requires lenders to report the spread between the APR on a loan and the yield on Treasury securities of comparable maturity when the spread exceeds a certain threshold. The final rule sets the reporting threshold (which depends on lien status) at the level proposed by the Board in January 2002. The final rule also adds a field to the HMDA/LAR for lien status, which must be reported for loans and applications, but not for purchased loans. Finally, the final rule requires lenders to ask telephone applicants their ethnicity, race, and sex. The public comments on these issues are summarized above in the **SUPPLEMENTARY INFORMATION.**

When the Board adopted the January 2002 amendments, it estimated the annual burden for the information collection as varying from 12 to 12,000 hours, averaging 242 hours for state member banks and 192 hours for mortgage banking subsidiaries and other respondents. (These estimates were based on the number of HMDA data submissions by Federal Reserve supervised respondents that were required to report calendar year 2000 data in March 2001.) Two items in the present amendments will increase the annual burden: The requirement to report lien status and the requirement to ask telephone applicants their ethnicity, race, and sex. The Board estimates that the addition of these two items will increase the burden by 7 percent. Accordingly, the Board estimates that the annual burden for the information collection varies from 13 to 12,840 hours per institution, averaging 260 hours for state member banks and 200 hours for mortgage banking subsidiaries and other respondents. Therefore, the annual burden of the information collection under Regulation C is estimated to be approximately 155,000 total annual hours for Federal Reserve supervised respondents.

The present rule changes will also cause respondents to incur a modest programming cost in addition to the programming cost associated with the January 2002 amendments. In particular, institutions will have to program their systems to add a new field to the HMDA/LAR for lien status; and institutions that do not now collect ethnicity, race, and sex on telephone applications may have to reprogram their systems to enable such collection. The Board believes that these additional costs will fit within the broad cost ranges the Board estimated applied to the January 2002 amendments. For convenience, those ranges are reproduced here: Institutions that use vendor-provided software systems (the bulk of reporting institutions) will face costs averaging around $2,000–$5,000; institutions that purchase and adapt off-the-shelf applications will face costs averaging between $20,000–$50,000; and institutions that use mainframe systems (the largest institutions) will face costs averaging between $120,000–$270,000. Using the maximum cost for each of the three ranges to calculate a weighted average, it is estimated that the average covered financial institution will incur a total cost from the January 2002 amendments and the present amendments of approximately $17,500.

The Board's Legal Division has determined that HMDA data collection and reporting are required by law; completion of the loan/application register, submission to the Federal Reserve, and disclosure to the public upon request are mandatory. After the data are redacted as required by the statute and regulation, they are made publicly available and are not considered confidential. Data that the statute and regulation require be redacted (loan number, date the application is received, and the date the action is taken) are given confidential treatment under exemption 6 of the Freedom of Information Act (5 U.S.C. 552(b)(6)).

The Board has a continuing interest in the public's opinions of its collections of information. At any time, comments regarding the burden estimate, or any other aspect of this collection of information, including suggestions for reducing the burden, may be sent to: Secretary, Board of Governors of the

Federal Reserve System, 20th and C Streets, NW., Washington, DC 20551; and to the Office of Management and Budget, Paperwork Reduction Project (7100–0247), Washington, DC 20503.

IV. Regulatory Flexibility Analysis

In accordance with section 3(a) of the Regulatory Flexibility Act (5 U.S.C. 604(a)), the Board has prepared a final regulatory analysis of these revisions. A copy of the analysis may be obtained from Publications Services, Board of Governors of the Federal Reserve System, Washington, DC 20551, at (202) 452–3245. A summary of the analysis follows.

The final rule is a consequence of Board policy to review its regulations periodically and a desire to update the regulation to reflect mortgage markets more clearly and enhance consumer protection.

The Board received no comments specifically responding to the initial regulatory analysis published in conjunction with the proposed rule. As discussed in Sections I and II, however, some comments the Board received discussed the burden arising from particular aspects of the proposed rule. Such comments are summarized throughout Sections I and II, as are the Board's responses. Section II also discusses alternative measures the Board considered.

The changes under the final rule require more data on certain covered transactions. Some of the changes will affect all institutions currently within the scope of the regulation, including covered small institutions; others will affect only certain institutions, depending upon the interest rates and fees they charge and on whether they take applications by telephone.

It is difficult to quantify the benefits and costs associated with the final rule. The new information will provide data to help identify possible discriminatory lending patterns and assist regulators in conducting examinations under the Community Reinvestment Act and other laws. Additional data on covered transactions will allow for more precise differentiation among loan products and reduce the potential bias that results when dissimilar loan products are jointly classified. The data will also help inform the public about developments in the mortgage market by revealing pricing information on higher-cost home loans, and improve local governments' ability to use HMDA data to help guide local investments. More complete data about applicant characteristics in telephone applications will improve fair lending analysis.

Although the final rule offers a number of benefits, it also will require covered lenders, including small institutions, to change their current procedures and systems for collecting and reporting required data. The Board believes the benefits outweigh these added costs.

List of Subjects in 12 CFR Part 203

Banks, Banking, Mortgages, Reporting and recordkeeping requirements.

For the reasons set forth in the preamble, the Board amends 12 CFR part 203 as follows:

PART 203—HOME MORTGAGE DISCLOSURE (REGULATION C)

1. The authority citation for part 203 continues to read as follows:

Authority: 12 U.S.C. 2801–2810.

2. Section 203.4 is amended by:

a. Revising paragraph (a)(12); and

b. Adding a new paragraph (a)(14).

§ 203.4 Compilation of loan data.

(a) *Data format and itemization.*

* * *

(12) For originated loans subject to Regulation Z, 12 CFR part 226, the difference between the loan's annual percentage rate (APR) and the yield on Treasury securities having comparable periods of maturity, if that difference is equal to or greater than 3 percentage points for loans secured by a first lien on a dwelling, or equal to or greater than 5 percentage points for loans secured by a subordinate lien on a dwelling. The lender shall use the yield on Treasury securities as of the 15th day of the preceding month if the rate is set between the 1st and the 14th day of the month and as of the 15th day of the current month if the rate is set on or after the 15th day, as prescribed in appendix A to this part.

* * * * *

(14) The lien status of the loan or application (first lien, subordinate lien, or not secured by a lien on a dwelling).

* * * * *

3. Appendix A is amended by:

a. Revising paragraph I.A.8.;

b. Revising paragraph I.D.2.;

c. Revising paragraph I.G.1.;

d. Redesignating paragraph I.G.2. as paragraph I.G.3. and adding a new paragraph I.G.2.;

e. Adding a new paragraph I.H.;

f. Revising the Loan/Application Register; and

g. Revising the Loan/Application Register Code Sheet.

Appendix A to Part 203—Form and Instructions for Completion of HMDA Loan/Application Register

* * * * *

I. Instructions for Completion of Loan/Application Register

* * * * *

A. Application or Loan Information

* * * * *

8. *Request for Preapproval of a Home Purchase Loan*

Indicate whether the application or loan involved a request for preapproval of a home purchase loan by entering the applicable code from the following:

Code 1—Preapproval requested
Code 2—Preapproval not requested
Code 3—Not applicable

a. Enter code 2 if your institution has a covered preapproval program but the applicant does not request a preapproval.

b. Enter code 3 if your institution does not have a preapproval program as defined in § 203.2(b).

c. Enter code 3 for applications or loans for home improvement or refinancing, and for purchased loans.

* * * * *

D. Applicant Information—Ethnicity, Race, Sex, and Income

* * * * *

2. *Mail, Internet, or Telephone Applications.* All loan applications, including applications taken by mail, Internet, or telephone must use a collection form similar to that shown in appendix B regarding ethnicity, race, and sex. For applications taken by telephone, the information in the collection form must be stated orally by the lender, except for information that pertains uniquely to applications taken in writing. If the applicant does not provide these data in an application taken by mail or telephone or on the Internet, enter the code for ''information not provided by applicant in mail, Internet, or telephone application'' specified in paragraphs I.D.3., 4., and 5. of this appendix. (See appendix B for complete information on the collection of these data in mail, Internet, or telephone applications.)

* * * * *

G. Pricing-Related Data

1. *Rate Spread*

a. For a home purchase loan, a refinancing, or a dwelling-secured home improvement loan that you originated, report the spread between the annual percentage rate (APR) and the applicable Treasury yield if the spread is equal to or greater than 3 percentage points for first-lien loans or 5 percentage points for subordinate-lien loans. To determine whether the rate spread meets this threshold, use the Treasury yield for securities of a comparable period of maturity as of the 15th day of a given month, depending on when the interest rate was set, and use the APR for the loan, as calculated and disclosed to the consumer under §§ 226.6 or 226.18 of Regulation Z (12 CFR part 226). Use the 15th day of a given month for any loan on which the interest rate was set on or after that 15th day through the 14th

day of the next month. (For example, if the rate is set on September 17, 2004, use the Treasury yield as of September 15, 2004; if the interest rate is set on September 3, 2004, use the Treasury yield as of August 15, 2004). To determine the applicable Treasury security yield, the financial institution must use the table published on the FFIEC's Web site (*http://www.ffiec.gov/hmda*) entitled ''Treasury Securities of Comparable Maturity under Regulation C.''

b. If the loan is not subject to Regulation Z, or is a home improvement loan that is not dwelling-secured, or is a loan that you purchased, enter ''NA.''

c. Enter ''NA'' in the case of an application that does not result in a loan origination.

d. Enter the rate spread to two decimal places, and use a leading zero. For example, enter 03.29. If the difference between the APR and the Treasury yield is a figure with more than two decimal places, round the figure or truncate the digits beyond two decimal places.

e. If the difference between the APR and the Treasury yield is less than 3 percentage points for a first-lien loan and less than 5 percentage points for a subordinate-lien loan, enter ''NA.''

2. *Date the interest rate was set.* The relevant date to use to determine the Treasury yield is the date on which the loan's interest rate was set by the financial institution for the final time before closing. If an interest rate is set pursuant to a ''lock-in'' agreement between the lender and the borrower, then the date on which the agreement fixes the interest rate is the date the rate was set. If a rate is re-set after a lock-in agreement is executed (for example, because the borrower exercises a float-down option or the agreement expires), then the relevant date is the date the rate is re-set for the final time before closing. If no lock-in agreement is executed, then the relevant date is the date on which the institution sets the rate for the final time before closing.

* * * * *

H. Lien Status

Use the following codes for loans that you originate and for applications that do not result in an origination:

Code 1—Secured by a first lien.
Code 2—Secured by a subordinate lien.
Code 3—Not secured by a lien.
Code 4—Not applicable (purchased loan).

a. Use Codes 1 through 3 for loans that you originate, as well as for applications that do not result in an origination (applications that are approved but not accepted, denied, withdrawn, or closed for incompleteness).

b. Use Code 4 for loans that you purchase.

* * * * *

BILLING CODE 6210–01–P

LOAN/APPLICATION REGISTER Page___of___

Name of Reporting Institution

City, State, ZIP

Form FR HMDA–LAR

Reporter's Identification Number

Agency Code

All columns (except Reasons for Denial) must be completed for each entry. See the instructions for details.

Application or Loan Information								Action Taken		Property Location				Applicant Information A = Applicant CA = Co-Applicant									Other Data		
														Ethnicity		Race		Sex							
Application or Loan Number	Date Application Received (mm/dd/ccyy)	Loan Type	Property Type	Purpose	Owner Occupancy	Loan Amount in Thousands	Preapproval	Type	Date (mm/dd/ccyy)	Four-Digit Metropolitan Area Number	Two-Digit State Code	Three-Digit County Code	Six-Digit Census Tract	A	CA	A	CA	A	CA	Gross Annual Income in thousands	Type of Purchaser of Loan	Reasons for Denial (optional)	Rate Spread	HOEPA Status	Lien Status
Example of Loan Originated Following Preapproval																									
LB-687439	01/15/2004	1	1	1	1	65	1	1	02/22/2004	8840	51	059	421.85	2	5	35	8	1	5	24	7		NA.	2	1
Example of Preapproval Request Denied																									
567890432 1-123409876 5	06/01/2004	1	1	1	1	125	1	7	06/20/2004	NA	NA	NA	NA	2	2	3	2	1	2	40	0	1,3	NA.	2	1
Example of Application Denied Following Preapproval																									
0123456789-9876543210	03/20/2004	1	1	1	1	50	1	3	04/30/2004	0450	01	015	0021.00	1	1	5	3	2	1	30	0	4,5	NA.	2	1

LOAN/APPLICATION REGISTER CODE SHEET

Use the following codes to complete the Loan/Application Register. The instructions to the HMDA-LAR explain the proper use of each code.

Application or Loan Information

Loan Type:
1—Conventional (any loan other than FHA, VA, FSA, or RHS loans)
2—FHA-insured (Federal Housing Administration)
3—VA-guaranteed (Veterans Administration)
4—FSA/RHS (Farm Service Agency or Rural Housing Service)

Property Type:
1—One to four-family (other than manufactured housing)
2—Manufactured housing
3—Multifamily

Purpose of Loan:
1—Home purchase
2—Home improvement
3—Refinancing

Owner-Occupancy:
1—Owner-occupied as a principal dwelling
2—Not owner-occupied
3—Not applicable

Preapproval (home purchase loans only):
1—Preapproval was requested
2—Preapproval was not requested
3—Not applicable

Action Taken:
1—Loan originated
2—Application approved but not accepted
3—Application denied by financial institution
4—Application withdrawn by applicant
5—File closed for incompleteness
6—Loan purchased by financial institution
7—Preapproval request denied by financial institution
8—Preapproval request approved but not accepted (optional reporting)

Applicant Information

Ethnicity:
1—Hispanic or Latino
2—Not Hispanic or Latino
3—Information not provided by applicant in mail, Internet, or telephone application
4—Not applicable (see App. A, I.D.)
5—No co-applicant

Race:
1—American Indian or Alaska Native
2—Asian
3—Black or African American
4—Native Hawaiian or Other Pacific Islander
5—White
6—Information not provided by applicant in mail, Internet, or telephone application
7—Not applicable (see App. A, I.D.)
8—No co-applicant

Sex:
1—Male
2—Female
3—Information not provided by applicant in mail, Internet, or telephone application
4—Not applicable (see App. A, I.D.)
5—No co-applicant

Type of Purchaser

0—Loan was not originated or was not sold in calendar year covered by register
1—Fannie Mae
2—Ginnie Mae
3—Freddie Mac
4—Farmer Mac
5—Private securitization
6—Commercial bank, savings bank or savings association
7—Life insurance company, credit union, mortgage bank, or finance company
8—Affiliate institution
9—Other type of purchaser

Reasons for Denial (optional reporting)

1—Debt-to-income ratio
2—Employment history
3—Credit history
4—Collateral
5—Insufficient cash (downpayment, closing costs)
6—Unverifiable information
7—Credit application incomplete
8—Mortgage insurance denied
9—Other

Other Data

HOEPA Status (only for loans originated or purchased):
1—HOEPA loan
2—Not a HOEPA loan

Lien Status (only for applications and originations):
1—Secured by a first lien
2—Secured by a subordinate lien
3—Not secured by a lien
4—Not applicable (purchased loans)

BILLING CODE 6210–01–C

4. Appendix B is amended by revising Paragraph II.A to read as follows:

Appendix B to Part 203—Form and Instructions for Data Collection on Ethnicity, Race, and Sex

* * * * *

II. Procedures

A. You must ask the applicant for this information (but you cannot require the applicant to provide it) whether the application is taken in person, by mail or telephone, or on the Internet. For applications taken by telephone, the information in the collection form must be stated orally by the lender, except for that information which pertains uniquely to applications taken in writing.

* * * * *

5. In Supplement I to Part 203:

a. Under *Section 203.2—Definitions,* a new heading *2(i) Manufactured Home* and a new paragraph 1 are added.

b. Under *Section 203.4—Compilation of Loan Data,* under *Paragraph 4(a)(12),* paragraph 1 is revised; and a new heading *Paragraph 4(a)(14)* and a new paragraph 1 are added.

Supplement I to Part 203—Staff Commentary

* * * * *

Section 203.2—Definitions

* * * * *

2(i) Manufactured home.

1. *Definition of a manufactured home.* The definition in § 203.2(i) refers to the federal building code for factory-built housing established by the Department of Housing and Urban Development (HUD). The HUD code requires generally that housing be essentially ready for occupancy upon leaving the factory and being transported to a building site. Modular homes that meet all of the HUD code standards are included in the definition because they are ready for occupancy upon leaving the factory. Other factory-built homes, such as panelized and pre-cut homes, generally do not meet the HUD code because they require a significant amount of construction on site before they are ready for occupancy. Loans and applications relating to manufactured homes that do not meet the HUD code should not be identified as manufactured housing under HMDA.

* * * * *

Section 203.4—Compilation of Loan Data

4(a) Data Format and Itemization. * * *

Paragraph 4(a)(12) Rate spread information.

1. *Treasury securities of comparable maturity.* To determine the yield on a Treasury security, lenders must use the table entitled ''Treasury Securities of Comparable Maturity under Regulation C,'' which will be published on the FFIEC's Web site (*http://www.ffiec.gov/hmda*) and made available in paper form upon request. This table will provide, for the 15th day of each month, Treasury security yields for every available loan maturity. The applicable Treasury yield date will depend on the date on which the financial institution set the interest rate on the loan for the final time before closing. See Appendix A, Paragraphs I.G.1. and 2.

* * * * *

Paragraph 4(a)(14) Lien status.

1. *Determining lien status for applications and loans originated.* i. Lenders are required to report lien status for loans they originate and applications that do not result in originations. Lien status is determined by reference to the best information readily available to the lender at the time final action is taken and to the lender's own procedures. Thus, lenders may rely on the title search they routinely perform as part of their underwriting procedures—for example, for home purchase loans. Regulation C does not require lenders to perform title searches solely to comply with HMDA reporting requirements. Lenders may rely on other information that is readily available to them at the time final action is taken and that they reasonably believe is accurate, such as the applicant's statement on the application or the applicant's credit report. For example, where the applicant indicates on the application that there is a mortgage on the property or where the applicant's credit report shows that the applicant has a mortgage—and that mortgage is not going to be paid off as part of the transaction—the lender may assume that the loan it originates is secured by a subordinate lien. If the same application did not result in an origination—for example, because the application is denied or withdrawn—the lender would report the application as an application for a subordinate-lien loan.

ii. Lenders may also consider their established procedures when determining lien status for applications that do not result in originations. For example, a consumer applies to a lender to refinance a $100,000 first mortgage; the consumer also has a home equity line of credit for $20,000. If the lender's practice in such a case is to ensure that it will have first-lien position—through a subordination agreement with the holder of the mortgage on the home equity line—then the lender should report the application as an application for a first-lien loan.

* * * * *

By order of the Board of Governors of the Federal Reserve System, June 21, 2002.

Jennifer J. Johnson,

Secretary of the Board.

[FR Doc. 02–16191 Filed 6–26–02; 8:45 am]

BILLING CODE 6210–01–P

DEPARTMENT OF TRANSPORTATION

Federal Aviation Administration

14 CFR Part 39

[Docket No. 2001–SW–40–AD; Amendment 39–12793; AD 2002–13–05]

RIN 2120–AA64

Airworthiness Directives; MD Helicopters, Inc. Model 369D, 369E, 369F, and 369FF Helicopters

AGENCY: Federal Aviation Administration, DOT.

ACTION: Final rule.

SUMMARY: This amendment adopts a new airworthiness directive (AD) for specified MD Helicopters, Inc. (MDHI) helicopters with a tailboom modified according to Aerometals Supplemental Type Certificate (STC) SH5055NM or SH4801NM. This AD requires an inspection to identify the part number (P/N) of the bolts that attach the tail rotor gearbox to the tailboom and replacing any bolt of inadequate grip length with an airworthy bolt. This AD also requires determining the number of bolt threads protruding from each nutplate and adding an additional washer if more than four threads protrude. This amendment is prompted by the discovery that bolts of inadequate grip length were specified to attach the tail rotor gearbox to the tailboom. The actions specified by this AD are intended to prevent loss of a tail rotor gearbox due to attaching bolts of inadequate grip length and subsequent loss of control of the helicopter.

DATES: Effective August 1, 2002.

FOR FURTHER INFORMATION CONTACT: John Cecil, Aviation Safety Engineer, FAA, Los Angeles Aircraft Certification Office, Airframe Branch, 3960 Paramount Blvd., Lakewood, California 90712–4137, telephone (562) 627–5228, fax (562) 627–5210.

SUPPLEMENTARY INFORMATION: A proposal to amend 14 CFR part 39 to include an AD for the specified MDHI helicopters was published in the **Federal Register** on December 27, 2001 (66 FR 66821). That action proposed requiring the following:

- Identifying the P/N of the bolts that attach the tail rotor gearbox to the tailboom;
- Replacing any bolt that is not a NAS1304–26 part-numbered bolt with a NAS1304–26 bolt;
- Replacing any bolt of inadequate grip length; and
- Determining the number of bolt threads protruding from each nutplate

and adding an additional washer if more than four threads protrude.

Aerometals issued Service Bulletin SB–001, dated August 3, 2000 (SB), which describes procedures for verifying that the proper attaching bolts are used to install the tail rotor gearbox to the tailboom.

Interested persons have been afforded an opportunity to participate in the making of this amendment. Due consideration has been given to the comment received.

The one commenter states that the applicability of the AD should be limited to certain part-numbered tailbooms with serial number (S/N) 5001–5032 specified in the FAA-approved Aerometals SB. The FAA disagrees because the specified tailbooms, S/N 5001–5032, installed with the affected bolts, may not have remained on the same helicopters. Any of the helicopters listed in the proposed AD may have had bolts with inadequate grip length installed per Aerometals STC SH5055NM or SH4801NM and must be inspected and, if required, modified.

After careful review of the available data, including the comment noted above, the FAA has determined that air safety and the public interest require the adoption of the rule as proposed. However, we have added introductory language for Figure 1 and placed Figure 1 directly after the AD paragraph in which it is referenced. We have determined that these changes will neither increase the economic burden on any operator nor increase the scope of the AD.

The FAA estimates that this AD will:

- Affect 500 helicopters of U.S. registry;
- Require ½ work hour per helicopter to determine whether a helicopter has been modified by either STC; and
- Require 1 work hour to inspect and replace the bolts for each of approximately 40 helicopters modified by the STC's.

The average labor rate is $60 per work hour. Required parts will cost approximately $40 per helicopter. Based on these figures, we estimate the total cost impact of the AD on U.S. operators to be $19,000.

The regulations adopted herein will not have a substantial direct effect on the States, on the relationship between the national Government and the States, or on the distribution of power and responsibilities among the various levels of government. Therefore, it is determined that this final rule does not have federalism implications under Executive Order 13132.

For the reasons discussed above, I certify that this action (1) is not a ''significant regulatory action'' under Executive Order 12866; (2) is not a ''significant rule'' under DOT Regulatory Policies and Procedures (44 FR 11034, February 26, 1979); and (3) will not have a significant economic impact, positive or negative, on a substantial number of small entities under the criteria of the Regulatory Flexibility Act. A final evaluation has been prepared for this action and it is contained in the Rules Docket. A copy of it may be obtained from the FAA, Office of the Regional Counsel, Southwest Region, 2601 Meacham Blvd., Room 663, Fort Worth, Texas.

List of Subjects in 14 CFR Part 39

Air transportation, Aircraft, Aviation safety, Safety.

Adoption of the Amendment

Accordingly, pursuant to the authority delegated to me by the Administrator, the Federal Aviation Administration amends part 39 of the Federal Aviation Regulations (14 CFR part 39) as follows:

PART 39—AIRWORTHINESS DIRECTIVES

1. The authority citation for part 39 continues to read as follows:

Authority: 49 U.S.C. 106(g), 40113, 44701.

§ 39.13 [Amended]

2. Section 39.13 is amended by adding a new airworthiness directive to read as follows:

2002–13–05 MD Helicopters, Inc.: Amendment 39–12793. Docket No. 2001–SW–40–AD.

Applicability: Model 369D, 369E, 369F, and 369FF helicopters, modified in accordance with Aerometals Supplemental Type Certificate (STC) SH5055NM or SH4801NM, certificated in any category.

Note 1: This AD applies to each helicopter identified in the preceding applicability provision, regardless of whether it has been otherwise modified, altered, or repaired in the area subject to the requirements of this AD. For helicopters that have been modified, altered, or repaired so that the performance of the requirements of this AD is affected, the owner/operator must request approval for an alternative method of compliance in accordance with paragraph (c) of this AD. The request should include an assessment of the effect of the modification, alteration, or repair on the unsafe condition addressed by this AD; and if the unsafe condition has not been eliminated, the request should include specific proposed actions to address it.

Compliance: Required as indicated, unless accomplished previously.

To prevent loss of the tail rotor gearbox due to attaching bolts of inadequate grip length and subsequent loss of helicopter control, accomplish the following:

(a) Within 25 hours time-in-service (TIS), conduct the following inspections:

(1) For each tail rotor gearbox attaching bolt (bolt):

(i) Determine the part number (P/N).

(ii) If the P/N cannot be determined or if the bolt is not P/N NAS1304–26, before further flight, replace the bolt with bolt, P/N NAS1304–26.

(iii) Torque the bolt to 100–110 in-lbs and apply a slippage mark.

(2) Remove the tailboom control rod and determine the number of bolt threads protruding from each nutplate on the internal surface of the aft tailboom frame casting, P/N 369D23503, as shown in Figure 1 of this AD. At least one thread must protrude. If more than four threads protrude, add an additional washer, P/N AN960D416, under the bolt head. Torque the bolt to 100–110 in-lbs, and reapply a slippage mark. See Figure 1:

BILLING CODE 4910–13–P

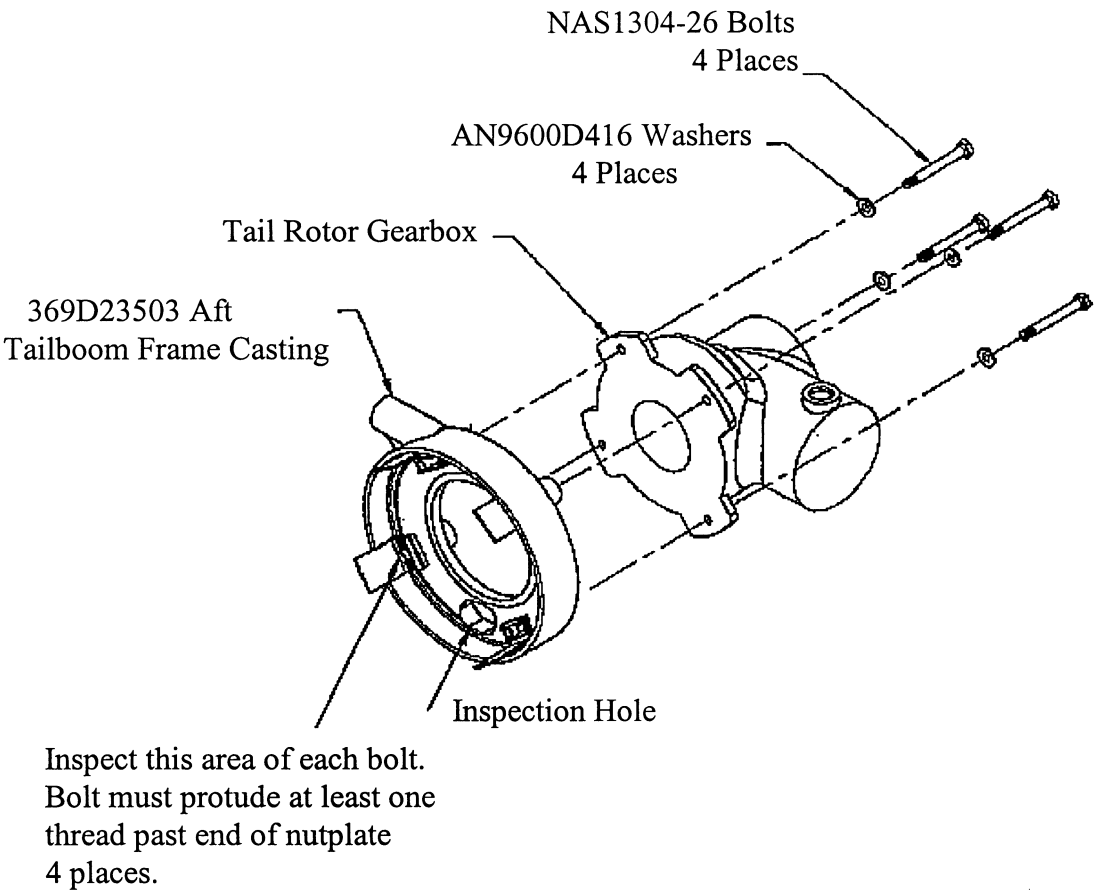

Figure 1 - Inspection Location

BILLING CODE 4910–13–C

(b) Between 2 and 10 hours TIS after accomplishing the requirements of paragraph (a) of this AD, inspect the torque on each bolt by applying 100 in-lbs. If any bolt movement occurs, retorque the bolt to 100–110 in-lbs and reapply a slippage mark. Reinspect the torque between 2 and 10 hours TIS thereafter until no bolt movement occurs.

Note 2: Aerometals Service Bulletin SB–001, dated August 3, 2000, pertains to the subject of this AD.

(c) An alternative method of compliance or adjustment of the compliance time that provides an acceptable level of safety may be used if approved by the Manager, Los Angeles Aircraft Certification Office (LAACO), FAA. Operators shall submit their requests through an FAA Principal Maintenance Inspector, who may concur or comment and then send it to the Manager, LAACO.

Note 3: Information concerning the existence of approved alternative methods of compliance with this AD, if any, may be obtained from the LAACO.

(d) Special flight permits will not be issued.

(e) This amendment becomes effective on August 1, 2002.

Issued in Fort Worth, Texas, on June 18, 2002.

Eric Bries,

Acting Manager, Rotorcraft Directorate, Aircraft Certification Service.

[FR Doc. 02–16057 Filed 6–26–02; 8:45 am]

BILLING CODE 4910–13–P

DEPARTMENT OF TRANSPORTATION

Federal Aviation Administration

14 CFR Part 39

[Docket No. 99–NE–49–AD; Amendment 39–12670; AD 2002–05–02]

RIN 2120–AA64

Airworthiness Directives; General Electric Company CF34–3A1 and –3B1 Series Turbofan Engines; Correction

AGENCY: Federal Aviation Administration, DOT.

ACTION: Final rule; correction.

SUMMARY: This document makes a correction to Airworthiness Directive (AD) 2002–05–02, applicable to General Electric Company (GE) CF34–3A1 and –3B1 series turbofan engines. AD 2002–05–02 was published in the **Federal**

Register on March 8, 2002 (67 FR 10606). Information in the Mandatory Inspections Requirements Table is incorrect in two places. In all other respects, the original document remains the same.

EFFECTIVE DATE: April 12, 2002.

FOR FURTHER INFORMATION CONTACT: Barbara Caufield, Aerospace Engineer, Engine Certification Office, FAA, Engine and Propeller Directorate, 12 New England Executive Park, Burlington, MA 01803–5299; telephone (781) 238–7146; fax (781) 238–7199.

SUPPLEMENTARY INFORMATION: A final rule airworthiness directive FR DOC. 02–5527, applicable to General Electric Company (GE) CF34–3A1 and –3B1 series turbofan engines, was published in the **Federal Register** on March 8, 2002 (67 FR 10606). The following correction is needed:

§ 39.13 [Corrected]

On page 10608, in AD 2002–05–02, in Table 804 Mandatory Inspection Requirements, in the Part nomenclature column, fourth line, ''HPT Rotor Outer Torque Coupling (all)'' is corrected to read ''HPT Rotor Outer Torque Coupling'' and in the eleventh line, ''Stage 3–8 Compressor Rotor Spool (all)'', in the Mandatory inspection column for that line, ''All Areas (FPI)'' is corrected to read ''All Non-coated Areas (FPI)''.

Issued in Burlington, MA, on June 17, 2002.

Jay J. Pardee,

Manager, Engine and Propeller Directorate, Aircraft Certification Service.

[FR Doc. 02–16175 Filed 6–26–02; 8:45 am]

BILLING CODE 4910–13–P

DEPARTMENT OF TRANSPORTATION

Federal Aviation Administration

14 CFR Part 39

[Docket No. 2000–NE–19–AD; Amendment 39–12792; AD 2002–13–04]

RIN 2120–AA64

Airworthiness Directives; Teledyne Continental Motors

AGENCY: Federal Aviation Administration, DOT.

ACTION: Final rule, request for comments.

SUMMARY: This amendment supersedes emergency airworthiness directive (AD) 2000–11–51 that was sent previously to all known U.S. owners and operators of Teledyne Continental Motors (TCM) O–300, IO–360, TSIO–360, and LTSIO–520–AE series reciprocating engines. That action required within 10 flight hours after receipt of that AD, replacement of certain magnetos if they fall within the specified serial number range, inspection of the removed magneto to verify that the stop pin is still in place, and, if the stop pin is not in place, inspection of the engine gear train. This amendment requires the same replacement and inspections and adds TCM C–125 and C145 series reciprocating engines to the applicability, which were inadvertently omitted from the emergency AD. This amendment is prompted by reports of engine failures on certain TCM reciprocating engines. The actions specified by this AD are intended to prevent engine failure and loss of control of the airplane due to migration of the magneto impulse coupling stop pin out of the magneto frame and into the gear train of the engine.

DATES: Effective July 12, 2002.

Comments for inclusion in the Rules Docket must be received on or before August 26, 2002.

ADDRESSES: Submit comments in triplicate to the Federal Aviation Administration (FAA), New England Region, Office of the Regional Counsel, Attention: Rules Docket No. 2000–NE–19–AD, 12 New England Executive Park, Burlington, MA 01803–5299. Comments may be inspected at this location, by appointment, between 8:00 a.m. and 4:30 p.m., Monday through Friday, except Federal holidays. Comments may also be sent via the Internet using the following address: ''*9-ane-adcomment@faa.gov*''. Comments sent via the Internet must contain the docket number in the subject line. The service information referenced in this AD may be obtained from Teledyne Continental Motors, PO Box 90, Mobile, AL 36601; telephone (888) 200–7565. Information regarding this action may be examined at the FAA, New England Region, Office of the Regional Counsel, 12 New England Executive Park, Burlington, MA.

FOR FURTHER INFORMATION CONTACT: Michael Downs, Aerospace Engineer, Chicago Aircraft Certification Office, FAA, 2300 East Devon Avenue, Des Plaines, IL 60018; telephone (847) 294–7870, fax (847) 294–7834.

SUPPLEMENTARY INFORMATION: On June 7, 2000, the Federal Aviation Administration (FAA) issued Emergency airworthiness directive (AD) 2000–11–51, applicable to TCM O–300, IO–360, TSIO–360, and LTSIO–520–AE series reciprocating engines, which requires, within 10 flight hours after the receipt of that AD, replacement of the magneto if it falls within the specified serial number range, an inspection of the removed magneto to verify that the stop pin is still in place, and, if the stop pin is not in place, an inspection of the engine gear train. That action was prompted by reports of engine failures on certain TCM reciprocating engines. This amendment requires the same replacement and inspections and adds TCM C–125 and C145 series reciprocating engines to the applicability, which were inadvertently omitted from the emergency AD. This condition, if not corrected, could result in engine failure and subsequent loss of control of the airplane.

FAA's Determination of an Unsafe Condition and Required Actions

Since the unsafe condition described is likely to exist or develop on other engines of the same type design, this AD is being issued to prevent engine failure and loss of control of the airplane due to migration of the magneto impulse coupling stop pin out of the magneto frame and into the gear train of the engine. This requires:

- Replacement of the magneto within 10 flight hours after the effective date, of this AD, if it falls within the specified serial number range, and
- Inspection of the removed magneto to verify that the stop pin is still in place, and
- If the stop pin is not in place, inspection of the engine gear train.

Immediate Adoption of This AD

Since it was found that immediate corrective action was required, notice and opportunity for prior public comment thereon were impracticable and contrary to the public interest, and good cause existed to make the AD effective immediately on June 7, 2000 to all known U.S. owners and operators of Teledyne Continental Motors (TCM) O–300, IO–360, TSIO–360, and LTSIO–520–AE series reciprocating engines. TCM C–125 and C145 series reciprocating engines are added to the applicability, which were inadvertently omitted from the emergency AD. These conditions still exist, and the AD is hereby superseded in the **Federal Register** as an amendment to Section 39.13 of part 39 of the Federal Aviation Regulations (14 CFR part 39) to make it effective to all persons.

Comments Invited

Although this action is in the form of a final rule that involves requirements affecting flight safety and, thus, was not preceded by notice and an opportunity for public comment, comments are invited on this rule. Interested persons

are invited to comment on this rule by submitting such written data, views, or arguments as they may desire. Communications should identify the Rules Docket number and be submitted in triplicate to the address specified under the caption **ADDRESSES.** All communications received on or before the closing date for comments will be considered, and this rule may be amended in light of the comments received. Factual information that supports the commenter's ideas and suggestions is extremely helpful in evaluating the effectiveness of the AD action and determining whether additional rulemaking action would be needed.

Comments are specifically invited on the overall regulatory, economic, environmental, and energy aspects of the rule that might suggest a need to modify the rule. All comments submitted will be available, both before and after the closing date for comments, in the Rules Docket for examination by interested persons. A report that summarizes each FAA-public contact concerned with the substance of this AD will be filed in the Rules Docket.

Commenters wishing the FAA to acknowledge receipt of their comments submitted in response to this notice must submit a self-addressed, stamped postcard on which the following statement is made: ''Comments to Docket Number 2000–NE–19–AD.'' The postcard will be date stamped and returned to the commenter.

Regulatory Analysis

This final rule does not have federalism implications, as defined in Executive Order 13132, because it would not have a substantial direct effect on the States, on the relationship between the national government and the States, or on the distribution of power and responsibilities among the various levels of government. Accordingly, the FAA has not consulted with state authorities prior to publication of this final rule.

The FAA has determined that this regulation is an emergency regulation that must be issued immediately to correct an unsafe condition in aircraft, and is not a ''significant regulatory action'' under Executive Order 12866. It has been determined further that this action involves an emergency regulation under DOT Regulatory Policies and Procedures (44 FR 11034, February 26, 1979). If it is determined that this emergency regulation otherwise would be significant under DOT Regulatory Policies and Procedures, a final regulatory evaluation will be prepared and placed in the Rules Docket. A copy of it, if filed, may be obtained from the Rules Docket at the location provided under the caption **ADDRESSES.**

List of Subjects in 14 CFR Part 39

Air transportation, Aircraft, Aviation safety, Safety.

Adoption of the Amendment

Accordingly, pursuant to the authority delegated to me by the Administrator, the Federal Aviation Administration amends part 39 of the Federal Aviation Regulations (14 CFR part 39) as follows:

PART 39—AIRWORTHINESS DIRECTIVES

1. The authority citation for part 39 continues to read as follows:

Authority: 49 U.S.C. 106(g), 40113, 44701.

§ 39.13 [Amended]

2. Section 39.13 is amended by adding a new airworthiness directive, Amendment 39–12792, to read as follows:

2002–13–04 Teledyne Continental Motors: Amendment 39–12792. Docket No. 2000–NE–19–AD.

Applicability

This airworthiness directive (AD) is applicable to Teledyne Continental Motors (TCM) C–125, C145, O–300, IO–360, TSIO–360, and LTSIO–520-AE series reciprocating engines with Unison Industries (Slick) Magnetos, models 6314, 6324, and 6364, with magneto serial numbers of 99110001 through 9912999 inclusive. These engines are used on, but not limited to Cessna 170, 170A, 170B, 172, 172A through 172H, 172XP, 336, 337, and T303, Beagle B242–C, Cirrus SR20 and SR22, Globe Swift GC–1A and GC–1B, Maule M4, Piper PA–28R–201T and PA–34, and Reims (Cessna) FA172, F337, and FR172.

Note 1: The magneto serial number (SN) can be found in logbooks or other maintenance records. If the magneto was installed, or if the engine was assembled new, rebuilt, or overhauled before October 31, 1999, it is likely that a suspect magneto is not installed on the engine.

Note 2: This airworthiness directive (AD) applies to each engine identified in the preceding applicability provision, regardless of whether it has been modified, altered, or repaired in the area subject to the requirements of this AD. For engines that have been modified, altered, or repaired so that the performance of the requirements of this AD is affected, the owner/operator must request approval for an alternative method of compliance in accordance with paragraph (d) of this AD. The request should include an assessment of the effect of the modification, alteration, or repair on the unsafe condition addressed by this AD; and, if the unsafe condition has not been eliminated, the request should include specific proposed actions to address it.

Compliance

Compliance with this AD is required within 10 flight hours after the effective date of this AD, unless already done.

To prevent engine failure and loss of control of the airplane due to migration of the magneto impulse coupling stop pin out of the magneto frame and into the gear train of the engine, do the following:

Replacement of Magneto

(a) Replace any magneto that has a SN of 99110001 through 99129999, inclusive, with a magneto that does not have a serial number in that range.

Inspections

(b) Inspect each removed magneto to verify that the impulse coupling stop pin is present. If the pin is missing, do the following:

(1) For C–125, C145, O–300, IO–360, and TSIO–360 series engines, do the following:

(i) Remove magnetos, alternator or generator, and starter adapter from the accessory case.

(ii) Remove the accessory case from the crankcase and oil sump.

(iii) Visually inspect the entire engine gear train for damaged or broken gears and gear teeth.

(iv) Inspect visible portions of the engine crankcase and accessory case for damage due to the stop pin becoming lodged between the engine gear train and the crankcase or accessory case.

(v) If the accessory case is damaged, repair or replace the accessory case.

(vi) If the engine crankcase is damaged, disassemble the engine, and repair or replace the crankcase.

(vii) Inspect the oil pump drive gear teeth and inner cam gear teeth for damage. Replace any engine drive train component that has been damaged.

(viii) Replace any damaged gear, and magnaflux the mating gears using the applicable engine overhaul manual.

(2) For LTSIO–520-AE series engines, do the following:

(i) Remove the starter adapter, fuel pump, vacuum pumps, accessory drive pads, and both magnetos.

(ii) Visually inspect the entire engine gear train for damaged or broken gears and gear teeth.

(iii) If any damage has occurred, remove the engine from the airplane, disassemble the engine, and inspect it for damage. If any damage is found, repair as necessary.

(iv) Replace any damaged gear, and magnaflux the mating gears using the applicable engine overhaul manual.

(v) Inspect the interior portions of the engine crankcase for damage due to the stop pin becoming lodged between the gear train and the crankcase. If the crankcase is damaged, repair or replace the crankcase.

(c) After the effective date of this AD, do not install any Unison Industries magnetos, model 6314, 6324, or 6364 that have a SN of 99110001 through 99129999 inclusive, on any engine.

Note 3: A cross-reference for part numbers (P/N's) for Unison magneto model 6314 (TCM P/N 653271), model 6324 (TCM P/N 653292), and model 6364 (TCM P/N 649696)

can be found in TCM Mandatory Service Bulletin 00–6A, dated June 8, 2000.

Alternative Methods of Compliance

(d) An alternative method of compliance or adjustment of the compliance time that provides an acceptable level of safety may be used if approved by the Manager, Chicago Aircraft Certification Office (CHIACO). Operators must submit their requests through an appropriate FAA Principal Maintenance Inspector, who may add comments and then send it to the Manager, CHIACO.

Note 4: Information concerning the existence of approved alternative methods of compliance with this airworthiness directive, if any, may be obtained from the CHIACO.

Special Flight Permits

(e) Special flight permits may be issued in accordance with §§ 21.197 and 21.199 of the Federal Aviation Regulations (14 CFR 21.197 and 21.199) to operate the aircraft to a location where the requirements of this AD can be done.

Effective Date

(f) This amendment becomes effective July 12, 2002.

Issued in Burlington, Massachusetts, on June 17, 2002.

Jay J. Pardee,

Manager, Engine and Propeller Directorate, Aircraft Certification Service.

[FR Doc. 02–16174 Filed 6–26–02; 8:45 am]

BILLING CODE 4910–13–P

DEPARTMENT OF TRANSPORTATION

Federal Aviation Administration

14 CFR Part 39

[Docket No. 98–ANE–38–AD; Amendment 39–12790; AD 2002–13–03]

RIN 2120–AA64

Airworthiness Directives; CFM International (CFMI) CFM56–2, –2A, –2B, –3, –3B, –3C, –5, –5B, –5C, and –7B Series Turbofan Engines

AGENCY: Federal Aviation Administration, DOT.

ACTION: Final rule.

SUMMARY: This amendment supersedes an existing airworthiness directive (AD), that is applicable to certain CFM International (CFMI) CFM56 series turbofan engines. That AD currently requires revisions to the Airworthiness Limitations Section of applicable Engine Shop Manuals (ESM's) to include required enhanced inspection of selected critical life-limited parts at each piece-part exposure. This amendment requires revisions to the Airworthiness Limitations Section of the applicable manufacturer's manuals and air carrier's approved continuous airworthiness maintenance program to incorporate additional inspections of selected critical life-limited parts at each piece-part exposure. This amendment is prompted by an FAA study of in-service events involving uncontained failures of critical rotating parts. The actions specified by this AD are intended to prevent critical life-limited rotating engine part failure, which could result in an uncontained engine failure and damage to the airplane.

DATES: Effective date August 1, 2002.

ADDRESSES: Information regarding this action may be examined, by appointment, at the Federal Aviation Administration (FAA), New England Region, Office of the Regional Counsel, 12 New England Executive Park, Burlington, MA.

FOR FURTHER INFORMATION CONTACT: Diane Cook, Aerospace Engineer, Engine Certification Office, FAA, Engine and Propeller Directorate, 12 New England Executive Park, Burlington, MA 01803–5299; telephone (781) 238–7133, fax (781) 238–7199.

SUPPLEMENTARY INFORMATION: A proposal to amend part 39 of the Federal Aviation Regulations (14 CFR part 39) by superseding AD 2000–12–01, Amendment 39–11779 (65 FR 37031, June 13, 2000), which is applicable to certain CFMI CFM56 series turbofan engines, was published in the **Federal Register** on October 5, 2001, (66 FR 50910). That action proposed to modify the airworthiness limitations section of the manufacturer's manual and an air carrier's approved continuous airworthiness maintenance program to incorporate additional inspection requirements.

Comments

Interested persons have been afforded an opportunity to participate in the making of this amendment. Due consideration has been given to the comments received.

Typographical Errors

Four commenters requested typographical errors be corrected in the Mandatory Inspections Table as follows:

- For HPT Disk, change Engine Manual Section from 75–72–02 to 75–52–02.
- For HPC Rear (CDP) Air Seal, change Engine Manual Section from 72–52–03 to 72–31–08.
- For LPT Stub Shaft, change Engine Models from All to -2, -2A, -2B, -3, -3B, and -3C.
- For LPT Stub Shaft, change Engine Manual Section from 72–52–03 to 72–55–02.
- For LPT Shaft, change Inspection from FPI to MPI.

The FAA agrees and has corrected these typographical errors in the final rule.

Concern for Lead Time

One commenter is concerned that for operators to put procedures and tooling in place in time to comply with the AD, the manufacturer should release the Engine Manual time limit and procedural changes by Temporary Revision before the issuance of the AD, or, revise the AD compliance time to state compliance to be within 30 days after the issuance of the Engine Manual revision (or Temporary Revision).

The FAA understands the commenter's concern. The FAA is aware that the manufacturer has not yet issued Temporary Revisions to the Engine Manual time limits section. However, the existing AD and this final rule allow the manufacturer up to 30 days after the effective date of the AD to issue the necessary revisions to the time limits section. Therefore, no action is necessary to address the commenter's observation.

Question on Model Effectivity

One commenter asks why the proposed rule does not affect the various models of the CFM56–5A engine. The FAA understands that the commenter is referring to the CFM56–5–A engine in the proposed rule and in the final rule that is an engine subset covered under the -5 series. The -5 series is listed in the Applicability section, and therefore, the CFM56–5–A engine is included in the applicability of this AD.

After careful review of the available data, including the comments noted above, the FAA has determined that air safety and the public interest require the adoption of the rule with the changes described previously. The FAA has determined that these changes will neither increase the economic burden on any operator nor increase the scope of the AD.

Economic Analysis

The FAA estimates that 5,100 CFM56 engines installed on airplanes of US registry would be affected by this AD and that there are approximately 2,300 piece part annual inspections that would be required. It would take approximately 2,775 work hours to do these inspections. The average labor rate is $60 per work hour. The total estimated annual cost of the new inspections on US operators is expected to be approximately $166,500.

Regulatory Analysis

This final rule does not have federalism implications, as defined in Executive Order 13132, because it would not have a substantial direct effect on the States, on the relationship between the national government and the States, or on the distribution of power and responsibilities among the various levels of government. Accordingly, the FAA has not consulted with state authorities prior to publication of this final rule.

For the reasons discussed above, I certify that this action (1) is not a ''significant regulatory action'' under Executive Order 12866; (2) is not a ''significant rule'' under the DOT Regulatory Policies and Procedures (44 FR 11034, February 26, 1979); and (3) if promulgated, will not have a significant economic impact, positive or negative, on a substantial number of small entities under the criteria of the Regulatory Flexibility Act. A final evaluation has been prepared for this action and it is contained in the Rules Docket. A copy of it may be obtained by contacting the Rules Docket at the location provided under the caption **ADDRESSES.**

List of Subjects in 14 CFR Part 39

Air transportation, Aircraft, Aviation safety, Safety.

Adoption of the Amendment

Accordingly, pursuant to the authority delegated to me by the Administrator, the Federal Aviation Administration amends part 39 of the Federal Aviation Regulations (14 CFR part 39) as follows:

PART 39—AIRWORTHINESS DIRECTIVES

1. The authority citation for part 39 continues to read as follows:

Authority: 49 U.S.C. 106(g), 40113, 44701.

§ 39.13 [Amended]

2. Section 39.13 is amended by removing Amendment 39–11779 (65 FR 3731, June 13, 2000), and by adding a new airworthiness directive, Amendment 39–12790, to read as follows:

2002–13–03 CFM International: Amendment 39–12790. Docket No. 98–ANE–38–AD. Supersedes AD 2000–12–01, Amendment 39–11779.

Applicability

This airworthiness directive (AD) is applicable to CFM International (CFMI) CFM56–2, –2A, –2B, –3, –3B, –3C, –5, –5B, –5C, and –7B series turbofan engines, installed on but not limited to McDonnell Douglas DC–8 series, Boeing 737 series, Airbus Industrie A319, A320, A321, and A340 series, as well as Boeing C–135, E–3, E–6, KC–135, KE–3, and RC–135 (military) series airplanes.

Note 1: This AD applies to each engine identified in the preceding applicability provision, regardless of whether it has been modified, altered, or repaired in the area subject to the requirements of this AD. For engines that have been modified, altered, or repaired so that the performance of the requirements of this AD is affected, the owner/operator must request approval for an alternative method of compliance in accordance with paragraph (c) of this AD. The request should include an assessment of the effect of the modification, alteration, or repair on the unsafe condition addressed by this AD; and, if the unsafe condition has not been eliminated, the request should include specific proposed actions to address it.

Compliance

Compliance with this AD is required as indicated, unless already accomplished.

To prevent critical life-limited rotating engine part failure, which could result in an uncontained engine failure and damage to the airplane, accomplish the following:

Inspections

(a) Within the next 30 days after the effective date of this AD, revise the Airworthiness Limitations Section (chapter 05–00–00) of Engine Shop Manual (ESM) CFMI–TP.SM.4, for CFM56–2 series engines, ESM CFMI–TP.SM.6, for CFM56–2A/–2B series engines, ESM CFMI–TP.SM.5, for CFM56–3/–3B/–3C series engines, ESM CFMI–TP.SM.7 for CFM56–5 series engines, ESM CFMI–TP.SM.9 for CFM56–5B series engines, ESM CFMI–TP.SM.8 for CFM56–5C series engines, and ESM CFMI–TP.SM.10 for CFM56–7B series engines, and for air carrier operations, revise the approved continuous airworthiness maintenance program, by adding the following:

''MANDATORY INSPECTIONS

(1) Perform inspections of the following parts at each piece-part opportunity in accordance with the Inspection/Check section instructions provided in the applicable manual sections listed below:

Engine models	Part name	Engine manual section	Inspection
All Models	Fan Disk (All Part Numbers (P/N))	72–21–03	Disk Fluorescent Penetrant Inspection (FPI) and Disk Bore and Dovetail Eddy Current Inspection (ECI).
All Models	Fan Shaft (All P/N)	72–22–01	Magnetic Particle Inspection (MPI).
CFM56–2, –2A, –2B, –3, –3B, and –3C.	HPT Disk (All P/N)	72–52–02	FPI, Disk Bore ECI and Disk Rim Bolt Hole(s) ECI.
CFM56–5,–5B, –5C, and –7B	HPT Disk (All P/N)	72–52–02	FPI, Disk Bore ECI.
CFM56–2	HPT Front Rotating Air Seal (All P/N)	72–52–03	FPI, Seal Bore ECI and Bolt Hole(s) or Focused FPI as applicable.
CFM56–2A, –2B, –3, –3B, and –3C.	HPT Front Rotating Air Seal (All P/N)	72–52–03	FPI, Seal Bore ECI and Bolt Hole(s) ECI.
CFM56–5, –5B, –5C, and –7B	HPT Front Rotating Air Seal (All P/N)	72–52–03	FPI, Seal Bore ECI and Bolt Hole(s) Focused FPI.
All Models	HPC Stage 1–2 Spool (All P/N)	72–31–04	FPI.
All Models	HPC Stage 3 Disk (All P/N)	72–31–05	FPI.
All Models	HPC Stage 4–9 Spool (All P/N)	72–31–06	FPI.
All Models	HPC Front Shaft (All P/N)	72–31–07	FPI

Engine models	Part name	Engine manual section	Inspection
All Models	HPC Rear (CDP) Air Seal (All P/N)	72–31–08	FPI.
All Models	LPT Stage 1 Disk (All P/N)	72–54–03	FPI.
All Models	LPT Stage 2 Disk (All P/N)	72–54–03	FPI.
All Models	LPT Stage 3 Disk (All P/N)	72–54–03	FPI
All Models	LPT Stage 4 Disk (All P/N)	72–54–03	FPI.
CFM56–5C.	LPT Stage 5 Disk (All P/N)	72–54–03	FPI.
All Models	LPT Rotor Support (All P/N)	72–54–05	FPI.
All Models	LPT Shaft (All P/N)	72–55–01	MPI.
CFM56–2, –2A, –2B, –3, –3B and –3C.	LPT Stub Shaft (All P/N)	72–55–02	FPI.

(2) For the purposes of these mandatory inspections, piece-part opportunity means:

(i) The part is considered completely disassembled when accomplished in accordance with the disassembly instructions in the manufacturer's engine manual; and

(ii) The part has accumulated more than 100 cycles in service since the last piece-part opportunity inspection, provided that the part was not damaged or related to the cause for its removal from the engine.''

(b) Except as provided in paragraph (c) of this AD, and notwithstanding contrary provisions in § 43.16 of the Federal Aviation Regulations (14 CFR 43.16), these mandatory inspections must be performed only in accordance with the Time Limits section of the manufacturer's ESM.

Alternative Methods of Compliance

(c) An alternative method of compliance or adjustment of the compliance time that provides an acceptable level of safety may be used if approved by the Manager, Engine Certification Office. Operators must submit their request through an appropriate FAA Principal Maintenance Inspector, who may add comments and then send it to the Manager, Engine Certification Office.

Note 2: Information concerning the existence of approved alternative methods of compliance with this airworthiness directive, if any, may be obtained from the Engine Certification Office.

Special Flight Permits

(d) Special flight permits may be issued in accordance with §§ 21.197 and 21.199 of the Federal Aviation Regulations (14 CFR 21.197 and 21.199) to operate the airplane to a location where the requirements of this AD can be accomplished.

Continuous Airworthiness Maintenance Program

(e) FAA-certificated air carriers that have an approved continuous airworthiness maintenance program in accordance with the record keeping requirement of § 121.369(c) of the Federal Aviation Regulations (14 CFR 121.369(c)) of this chapter must maintain records of the mandatory inspections that result from revising the Airworthiness Limitations Section of the applicable ESM and the air carrier's continuous airworthiness program. Alternatively, certificated air carriers may establish an approved system of record retention that provides a method for preservation and retrieval of the maintenance records that include the inspections resulting from this AD, and include the policy and procedures for implementing this alternate method in the air carrier's maintenance manual required by § 121.369(c) of the Federal Aviation Regulations (14 CFR 121.369 (c)); however, the alternate system must be accepted by the appropriate PMI and require the maintenance records be maintained either indefinitely or until the work is repeated. Records of the piece-part inspections are not required under § 121.380(a)(2)(vi) of the Federal Aviation Regulations (14 CFR 121.380(a)(2)(vi)). All other operators must maintain the records of mandatory inspections required by the applicable regulations governing their operations.

Note 3: The requirements of this AD have been met when the ESM changes are made and air carriers have modified their continuous airworthiness maintenance plans to reflect the requirements in the applicable ESM.

Effective Date

(f) This amendment becomes effective on August 1, 2002.

Issued in Burlington, Massachusetts, on June 17, 2002.

Jay J. Pardee,

Manager, Engine and Propeller Directorate, Aircraft Certification Service.

[FR Doc. 02–16173 Filed 6–26–02; 8:45 am]

BILLING CODE 4910–13–P

SECURITIES AND EXCHANGE COMMISSION

17 CFR Parts 231 and 241

[Release Nos. 33–8107; 34–46101; File No. S7–23–02]

Commission Guidance on the Application of Certain Provisions of the Securities Act of 1933, the Securities Exchange Act of 1934, and Rules Thereunder to Trading in Security Futures Products

AGENCY: Securities and Exchange Commission.

ACTION: Interpretation; request for comments.

SUMMARY: The Commission is publishing its views regarding the application of certain provisions of the federal securities laws to trading in security futures products. We also are soliciting comment.

DATES: *Effective Date:* The guidance is effective on June 27, 2002.

ADDRESSES: Comments should be submitted in triplicate to Jonathan G. Katz, Secretary, Securities and Exchange Commission, 450 5th Street, NW., Washington, DC 20549–0609. Comments also may be submitted electronically at the following E-mail address: *rule-comments@sec.gov.* All comment letters should refer to File No. S7–23–02; this file number should be included on the subject line if E-mail is used. All comments received will be available for public inspection and copying in the Commission's Public Reference Room, 450 5th Street, NW., Washington, DC 20549–0102. Electronically submitted comment letters will be posted on the

Commission's Internet site *(http://www.sec.gov)*.[1]

FOR FURTHER INFORMATION CONTACT: With respect to discussions concerning Securities Act and director, officer, and principal stockholder issues administered by the Division of Corporation Finance, contact Robert Plesnarski, Special Counsel (Securities Act Rule 144) or Anne Krauskopf, Special Counsel (rules under Exchange Act Section 16), (202) 942–2900, Office of Chief Counsel, Division of Corporation Finance, Securities and Exchange Commission, 450 Fifth Street, NW., Washington, DC 20549–0402.

With respect to discussions concerning mergers and acquisitions issues administered by the Division of Corporation Finance, contact Pamela Carmody, Special Counsel, (202) 942–2920, Office of Mergers & Acquisitions, Division of Corporation Finance, Securities and Exchange Commission, 450 Fifth Street, NW., Washington, DC 20549–0303.

With respect to general questions about the interpretive positions expressed by the Division of Corporation Finance in this release, contact N. Sean Harrison, Special Counsel, (202) 942–2910, Office of Rulemaking, Division of Corporation Finance, Securities and Exchange Commission, 450 Fifth Street, NW., Washington, DC 20549–0310.

With respect to discussions concerning market supervision issues administered by the Division of Market Regulation contact Theodore Lazo, Senior Special Counsel, or Andrew Shipe, Special Counsel, (202) 942–0160, Office of Market Supervision, Division of Market Regulation, Securities and Exchange Commission, 450 Fifth Street, NW., Washington, DC 20549–1001.

With respect to discussions concerning trading practices issues administered by the Division of Market Regulation contact James Brigagliano, Assistant Director, Nancy Oremland, Special Counsel (Regulation M and Exchange Act Rule 14e–5), Kevin Campion, Special Counsel (Exchange Act Rule 14e–4), Joan Collopy, Special Counsel (Exchange Act Rule 10b–18), or Greg Dumark, Special Counsel (Exchange Act Rule 10a–1 and Rule 3b–3), (202) 942–0772, Office of Trading Practices, Division of Market Regulation, Securities and Exchange Commission, 450 Fifth Street, NW., Washington, DC 20549–1001.

With respect to discussions concerning other broker-dealer issues administered by the Division of Market Regulation contact Catherine McGuire, Chief Counsel, Paula Jenson, Deputy Chief Counsel, Kenneth Rosen, Special Counsel, or Christina McGlosson, Special Counsel, (202) 942–0073, Office of Chief Counsel, Division of Market Regulation, Securities and Exchange Commission, 450 Fifth Street, NW., Washington, DC 20549–1001.

SUPPLEMENTARY INFORMATION:

I. Background

On December 21, 2000, Congress enacted the Commodity Futures Modernization Act of 2000 (''CFMA''),[2] addressing the regulation of security futures products.[3] Security futures products are securities for purposes of the federal securities laws, including the Securities Act of 1933 (''Securities Act'') and the Securities Exchange Act of 1934 (''Exchange Act''), and are ''futures'' for purposes of the Commodity Exchange Act (''CEA'').[4] Because these products are both securities and futures, the CFMA established a framework for the joint regulation of these products by the Securities and Exchange Commission (''SEC'' or ''Commission'') and the Commodity Futures Trading Commission (''CFTC'').

In creating this framework, the CFMA exempted security futures products, as well as certain security futures products intermediaries and markets, from certain provisions of the Securities Act, the Exchange Act, and the CEA, and directed the Commission and the CFTC to coordinate in certain aspects the regulation of dually regulated persons.[5] Accordingly, security futures products must be traded on trading facilities and through intermediaries that are registered with both the Commission and the CFTC. Given this new regulatory framework, various industry participants have requested guidance regarding the application of certain provisions of the federal securities laws to trading in security futures products.

Section II.A. below addresses some of the questions that may arise under certain statutory provisions and rules administered by the Commission's Division of Corporation Finance. Section II.B. addresses some of the questions that may arise under certain statutory provisions and rules administered by the Commission's Division of Market Regulation. Because security futures products are new products, the guidance provided is based on how we expect markets in these products to operate. As these markets develop and we learn more about their operations and security futures products themselves, we may need to revisit some of the guidance provided today or provide guidance on additional issues.[6]

II. Discussion

A. Guidance on Statutory Provisions and Rules Administered by the Division of Corporation Finance

1. Securities Act and Director, Officer, and Principal Stockholder Issues

a. Securities Act Registration and Exemptions From Registration: Securities Act Rule 144

Every offer or sale of a security in interstate commerce or by use of the mails must either be registered under the Securities Act or exempt from

[1] We do not edit personal, identifying information, such as name or e-mail addresses, from electronic submissions. Submit only information you wish to make publicly available.

[2] *See* Pub. L. 106–554, 114 Stat. 2763.

[3] *See* Exchange Act section 3(a)(56) (15 U.S.C. 78c(a)(56)), Securities Act Section 2(a)(16) (15 U.S.C. 77b(a)(16)), and CEA section 1a(32) (7 U.S.C. 1a(32)) define ''secruity futures product'' as a security future or an option on a security future.

[4] Exchange Act section 3(a)(10) (15 U.S.C. 78c(a)(10)) defines a ''security'' to include a security future. The Securities Act defines a ''security'' to include a security future in section 2(a)(1) (15 U.S.C. 77b(a)(1)). The term ''security future'' is defined in Exchange Act section 3(a)(55) and in CEA section 1a(31) (7 U.S.C. 1a(31)) as a contract of sale for future delivery of a single security or of a narrow-based security index. *See also* Securities Act section 2(a)(16) (15 U.S.C. 77b(a)(16)).

[5] Specifically, certain markets and intermediaries that are registered with only the CFTC may register with the SEC by submitting a written notice that is effective upon filing. Exchange Act §§ 6(g) and 15(b)(11) (15 U.S.C. 78f(g) and 78o(b)(11)). *Cf.* CEA §§ 5f and 4f(a)(2) (7 U.S.C. 7b–1 and 6f(a)(2)). A ''notice-registered'' (as opposed to a fully registered) broker-dealer is exempt from provisions specified in section 15(b)(11)(B) of the Exchange Act. A ''notice-registered'' exchange is exempt from provisions specified in section 6(g)(4) of the Exchange Act, and certain floor brokers on such exchanges are exempt from broker-dealer registration and the provisions specified in section 15(b)(12) of the Exchange Act. The CFMA also requires the Commission, in consultation with the CFTC, to issue rules, regulations, or orders as necessary to avoid duplicative or conflicting regulations applicable to firms that are subject to all of the provisions of the Exchange Act and the CEA with respect to the treatment of customer funds, securities, or property, maintenance of books and records, financial reporting, or other financial responsibility rules involving security futures products. *See* Exchange Act section 15(c)(3)(B) [15 U.S.C. 78o(c)(3)(B)]; CEA section 4d(c) (7 U.S.C. 6d(c)).

[6] In addition, some of the guidance provided in this release relates to security futures instead of all security futures products. As noted above, security futures products are a broader set of instruments that include options on security futures as well as security futures themselves. *See supra* note 3. Should the Commission in coordination with the CFTC permit the trading of such instruments in the future, *see* section 6(h)(6) of the Exchange Act (15 U.S.C. 78f(h)(6)), at that time, the Commission could look at the function of such instruments to determine whether this guidance for security futures is appropriate for options on security futures.

registration.[7] Securities Act Rule 144 [8] provides a nonexclusive safe harbor for the unregistered resale of restricted [9] and other securities held by affiliates of an issuer, as well as for the unregistered resale of restricted securities by non-affiliates of the issuer. The Rule sets forth specific standards that, if met, permit persons who hold such securities to sell them publicly without being deemed to be ''underwriters'' under the Securities Act [10] and in reliance on the Securities Act section 4(1) exemption from registration.[11]

The CFMA amended the Securities Act in the following manner:

- It amended Section 2(a)(1) [12] to include security futures products within the definition of ''security.''
- It added section 3(a)(14) [13] to exempt the offer and sale of a security futures product from the registration requirements of Section 5 if the security futures product is: (1) Traded on a national securities exchange or a national securities association registered under section 15A(a) of the Exchange Act [14] and (2) cleared by a clearing agency that is either registered under section 17A of the Exchange Act [15] or exempt from registration under section 17A(b)(7) of the Exchange Act.[16]
- It amended section 2(a)(3) [17] to ensure that security futures products could not be used by an issuer,[18] its affiliates [19] or underwriters to circumvent the registration requirements of Section 5 with respect to the issuer's securities underlying the security futures product. As amended, Section 2(a)(3) provides ''[a]ny offer or sale of a security futures product by or on behalf of the issuer of the securities underlying the security futures product, an affiliate of the issuer, or an underwriter, shall constitute a contract for sale of, sale of, offer for sale, or offer to sell the underlying securities.'' Accordingly, a transaction in a security futures product on a security of an issuer by such persons also is a transaction in the issuer's underlying security that must be registered unless an exemption from registration is available.[20]

Q1: May an affiliate of an issuer rely upon Rule 144 in connection with the offer or sale of securities of that issuer that occurs by virtue of the affiliate's offer or sale of a security future?

A1: Yes. Section 2(a)(3) provides that the offer or sale of the security future by the affiliate also is a concurrent offer or sale of the underlying securities. Accordingly, the concurrent offer or sale of the underlying securities would either have to be registered or satisfy the conditions of an exemption from registration. The affiliate may rely on Rule 144 to establish the availability of the section 4(1) exemption.

Q2: May a person who is not an affiliate of the issuer rely upon Rule 144 in connection with the offer or sale of restricted securities of the issuer that occurs by virtue of the person's offer or sale of a security future?

A2: Yes. If the non-affiliate is an ''underwriter'' of the underlying securities, its offer or sale of the security future also is a concurrent offer or sale of the underlying securities. Accordingly, the concurrent offer or sale of the underlying securities would either have to be registered or satisfy the conditions of an exemption from registration. The non-affiliate seller of restricted securities must, therefore, establish that it is not an ''underwriter'' of the underlying securities. The non-affiliate seller may rely on Rule 144 to establish that it is not an ''underwriter'' of the securities.

Q3: In analyzing whether a seller of securities that are sold by virtue of the sale of a security future may rely on Rule 144 in connection with that sale, when should the sale of the underlying securities be deemed to have occurred?

A3: The transaction in the underlying securities is deemed to have occurred at the same time as the transaction in the related security future. Accordingly, in determining the ability to rely on Rule 144, a seller should assess that reliance at the time of the sale of the security future.[21]

Q4: How should a seller of a security future assess his or her reliance on Rule 144 in connection with the offer or sale of the securities underlying that security future?

A4: The seller should analyze the transaction for purposes of Rule 144 as if it were a transaction in the underlying securities themselves.

Q5: May a non-affiliate settle a security future transaction with restricted securities?

A5: A non-affiliate may settle a security future transaction with restricted securities only if it could rely upon Rule 144 to offer and sell the underlying restricted securities at the time it offered and sold the security future.

Q6: What information should be provided in the Form 144 filed for securities of the issuer that underlie a security future?

A6: The Form 144 should be completed to cover the sale of underlying securities. Persons filing the Form 144 should make reference to the security future in the ''Remarks'' section. For example, disclosure could read: ''This Form 144 reflects the intended deemed sale of 10,000 shares of ABC issuer's securities that underlie (describe security future's material terms).''

---

[7] *See* section 5 of the Securities Act (15 U.S.C. 77e).

[8] 17 CFR 230.144.

[9] The term ''restricted securities'' is defined in Rule 144(a)(3) (17 CFR 230.144(a)(3)).

[10] Section 2(a)(11) of the Securities Act (15 U.S.C. 77b(a)(11)) defines an ''underwriter'' as ''[a]ny person who has purchased from an issuer with a view to, or offers or sells for an issuer in connection with, the distribution of any security, or participates or has a direct or indirect participation in any such undertaking, or participates or has a participation in the direct or indirect underwriting of any such undertaking * * *'' The definition applies to any person. No distinction is made between professional securities dealers and individual investors; any person who performs one of the specified functions in relation to an offering of securities is an underwriter within the meaning of section 2(a)(11).

[11] Securities Act section 4(1) (15 U.S.C. 77d(1)) states that the section 5 registration requirements shall not apply to transactions by any person other than an issuer, underwriter, or dealer.

[12] 15 U.S.C. 77b(a)(1).

[13] 15 U.S.C. 77c(a)(14).

[14] 15 U.S.C. 78o–3(a).

[15] 15 U.S.C. 78q–*1*.

[16] 15 U.S.C. 78q–*l*(b)(7).

[17] 15 U.S.C. 77b(a)(3).

[18] The term ''issuer'' is defined in section 2(a)(4) of the Securities Act and includes ''every person who issues or proposes to issue any security * * *'' (15 U.S.C. 77b(a)(4)).

[19] An ''affiliate'' of an issuer is defined as a ''person that directly, or indirectly through one or more intermediaries, controls, or is controlled by, or is under common control with, such issuer'' (17 CFR 230.405).

[20] All security futures establish obligations on the purchaser and seller of the security futures to either: (i) Deliver the underlying securities (in the case of a seller of a security future) or accept delivery of the underlying securities (in the case of a purchaser of a security future); or (ii) make or accept a cash payment at maturity of the security future to settle any gains or losses based on the difference between the settlement price of the security future on the last trading day and the price of the security future when the security future was originated. The terms of the security future dictate whether it is settled by physical delivery of the underlying securities or by cash payment.

Issues related to settlement method are raised throughout this interpretive release. However, settlement method may or may not affect the application of particular statutory provisions or rules. This release delineates where settlement method would affect the guidance provided. The Commission typically does not view settlement method of a derivative product as determinative of whether such product is or is not a security. *See, e.g., infra* note 97 (citing *Caiola* amicus curiae brief).

[21] The provision in section 2(a)(3) stating that ''(a)ny offer or sale of a security futures product by or on behalf of the issuer of the securities underlying the security futures product, an affiliate of the issuer, or an underwriter, shall constitute a contract for sale of, sale of, offer for sale, or offer to sell the underlying securities(,)'' applies regardless of whether a security future calls for physical delivery of the underlying security or cash settlement.

b. Disclosure Requirements and Short Swing Profit Recovery: Exchange Act Section 16

The CFMA amended section 16 of the Exchange Act so that it covers ownership of, and transactions in, security futures products.[22] Section 16 applies to every person who is the beneficial owner of more than 10% of any class of equity security registered under section 12 of the Exchange Act, and each officer and director (collectively ''insiders'') of the issuer of such security. Generally:

- Section 16(a) requires an insider to file an initial report with the Commission disclosing his or her beneficial ownership of all equity securities of the issuer upon becoming an insider. To keep this information current, section 16(a) also requires insiders to report changes in such holdings with respect to each month in which such a change occurs.[23]
- Section 16(b) provides the issuer (or shareholders suing on behalf of the issuer) a private right of action to recover from an insider any profit realized by the insider from any purchase and sale (or sale and purchase) of any equity security of the issuer within any period of less than six months.[24]
- Section 16(c) makes it unlawful for an insider to sell any equity security of the issuer if the insider: (1) Does not own the security sold; or (2) owns the security, but does not deliver it against the sale within specified time periods.[25]

The following responses address how section 16 would apply to security futures in some common situations.[26]

Q7: Section 16 applies to every person who is directly or indirectly the beneficial owner of more than ten percent of any class of equity security (other than an exempted security) registered under section 12 of the Exchange Act.[27] Exchange Act Rule 16a–1(a)(1)[28] provides that for purposes of determining whether a person is a ''beneficial owner'' of more than ten percent of any class of equity securities, the term ''beneficial owner'' shall mean any person who is deemed a ''beneficial owner'' pursuant to section 13(d) of the Exchange Act and the rules thereunder.[29] Would the equity securities underlying a security future be counted for purposes of determining whether the purchaser of the security future is a ''beneficial owner'' of more than ten percent of a class of equity security?

A7: Yes. A person is deemed to be the beneficial owner of the equity securities underlying a security future that requires physical settlement[30] of the long security future if the security future is held within 60 days of the last trading day of the security future.[31] However, the purchaser of a cash-settled security future (i.e., a security future that, by its terms, must be settled by a cash payment) is not deemed to beneficially own the securities underlying that security future for purposes of determining whether the purchaser is a ''beneficial owner'' of more than ten percent of the underlying class of equity security, because he or she does not have the right to acquire beneficial ownership of the underlying security.[32]

Q8: Is a security future on an equity security or a narrow-based security index[33] a ''derivative security'' under the Section 16 rules?

A8: Yes. Exchange Act Rule 16a–1(c)[34] generally defines the term ''derivative securities'' as ''any option, warrant, convertible security, stock appreciation right or similar right with an exercise or conversion privilege at a price related to an equity security, or similar securities with a value derived from the value of an equity security,'' subject to specific exclusions. A security future on an equity security or a narrow-based security index would be a ''similar security with a value derived from the value of an equity security'' and thus a ''derivative security'' within the meaning of Rule 16a–1(c), regardless of whether the security future calls for physical or cash settlement.

Q9: Exchange Act Rule 16a–1(b)[35] defines a ''call equivalent position'' as a derivative security position that increases in value as the value of the underlying equity security increases, including, but not limited to, a long convertible security, a long call option, or a short put option position. Is the purchase of a security future by an insider, or a long security future position, a ''call equivalent position?''

A9: Yes. Because the purchaser of a security future, regardless of whether the security future calls for cash or physical settlement, would benefit from an increase in value of the underlying equity security, the purchase of a security future establishes a call equivalent position.

Q10: Exchange Act Rule 16a–1(h)[36] defines a ''put equivalent position'' as a derivative security position that increases in value as the value of the underlying equity decreases, including, but not limited to, a long put option or a short call option position. Is the sale of a security future by an insider, or a short security future position, a put equivalent position?

A10: Yes. Because the seller of a security future, regardless of whether the security future calls for cash or physical settlement, would benefit from a decrease in value in the underlying equity security, the sale of a security future establishes a put equivalent position.

Q11: Exchange Act Rule 16b–6(a)[37] states that the establishment of, or increase, in a call equivalent position, or liquidation of, or decrease, in a put equivalent position shall be deemed a purchase of the underlying security for purposes of section 16(b). Conversely, Rule 16b–6(a) states that the establishment of, or increase, in a put equivalent position, or liquidation of, or decrease, in a call equivalent position shall be deemed a sale of the underlying securities for purposes of section 16(b). How would purchases and sales of security futures be subject to matching for Section 16(b) short-swing profit recovery purposes?

A11: The purchase of a security future (''call equivalent position'') would be matchable with any of the following transactions within any period of less than six months:

- Any disposition of the equity security underlying the security future;
- Any liquidation or decrease in a ''call equivalent position'' on the same class of equity security underlying the security future; or
- Any establishment or increase of a ''put equivalent position'' on the same class of equity security underlying the security future.

[22] Exchange Act section 16(f) (15 U.S.C. 78p(f)).

[23] Exchange Act section 16(a) (15 U.S.C. 78p(a)).

[24] Exchange Act section 16(b) (15 U.S.C. 78p(b)).

[25] Exchange Act section 16(c) (15 U.S.C. 78p(c)).

[26] These examples and other examples in this section are for purposes of section 16 of the Exchange Act only and do not address any other issues under the Exchange Act or the Securities Act. For a discussion of the Securities Act, see Section II.A.1.a.

[27] 15 U.S.C. 78*l*.

[28] 17 CFR 240.16a–1(a)(1).

[29] *See infra* Section II.A.2.

[30] *See supra* note 20.

[31] The last trading day is the day on which the security future terminates trading, *i.e.,* the last day in which an open position in a security future, either a long or short position, can be closed or liquidated either by buying or selling an opposite position. Any security future that has not been liquidated by the close of trading for that security future on the last trading day must be settled pursuant to the terms of the security future.

[32] *See infra* Section II.A.2 (discussing the application of the beneficial ownership rules of Regulation 13D).

[33] The term ''narrow-based security index'' is defined in section 3(a)(55) of the Exchange Act [15 U.S.C. 78c(a)(55)].

[34] 17 CFR 240.16a–1(c).

[35] 17 CFR 240.16a–1(b).

[36] 17 CFR 240.16a–1(h).

[37] 17 CFR 240.16b–6(a).

The sale of a security future (''put equivalent position'') would be matchable with any of the following transactions within any period of less than six months:

- Any acquisition of the equity security underlying the security future;
- Any liquidation or decrease in a ''put equivalent position'' on the same class of equity security underlying the security future; or
- Any establishment or increase of a ''call equivalent position'' on the same class of equity security underlying the security future.

Examples. For purposes of the following four examples, assume that the common stock of Company XYZ is registered under section 12 of the Exchange Act.

Example 1: On January 3, 2003, W, an officer of Company XYZ, purchases 10,000 shares of XYZ common stock. On September 3, 2003, W purchases 100 December delivery security futures on XYZ common stock. Each security future is on 100 shares of XYZ common stock. This purchase establishes a ''call equivalent position'' with respect to 10,000 shares of XYZ common stock. On November 3, 2003, W sells 10,000 shares of XYZ common stock. Interpretation: W's September purchase of the security futures would be matchable with W's November sale of the XYZ shares. Exchange Act Rule 16b-6(c)(2) [38] would apply to the determination of recoverable profits.

Example 2: On January 3, 2003, W purchases 100 September delivery security futures on XYZ common stock. On April 3, 2003, W sells call options on 5,000 shares of XYZ common stock. Interpretation: W's January purchase of the security futures established a ''call equivalent position'' with respect to 10,000 shares of XYZ common stock. W's subsequent sale of the call options established a ''put equivalent position'' with respect to 5,000 shares of XYZ common stock and is matchable with his purchase of 50 of the September delivery security futures.

Example 3: For purposes of this example, assume that W owns 10,000 shares of XYZ common stock. On January 3, 2003, W sells 100 June delivery security futures on XYZ common stock. On April 3, 2003, W sells put options overlying 10,000 shares of XYZ common stock. Interpretation: W's January sale of the security futures established a ''put equivalent position'' with respect to 10,000 shares of XYZ common stock. W's subsequent sale of the put options established a ''call equivalent position'' (W is obligated to purchase the XYZ shares underlying the put options if the holder of the options exercises them) and is matchable with his January sale of the security futures.

Example 4: On January 3, 2003, W purchases 100 September delivery security futures on XYZ common stock. On February 10, 2003, W purchases 10,000 shares of XYZ common stock. On September 5, 2003, W sells 100 September delivery security futures on XYZ common stock, to offset [39] the security futures purchased in January. Interpretation: Because W's sale of the security futures occurred more than six months after both his January purchase of the security futures and his February purchase of the XYZ common stock, the offsetting sale would not be matchable with either purchase. However, the offsetting sale would be matchable with W's purchase of the XYZ shares in February, if it occurred within six months of the February purchase, and it would be matchable with either the January or February purchase (depending upon which transaction had the lowest purchase price) if it occurred within six months of the January purchase.[40]

Q12: Exchange Act Rule 16b–6(b) exempts from Section 16(b) the closing of a derivative security position as a result of its exercise or conversion, and the acquisition of underlying securities at a fixed exercise price due to the exercise or conversion of a call equivalent position, or the disposition of underlying securities at a fixed exercise price due to the exercise of a put equivalent position.[41] The Rule further provides, however, that the acquisition of underlying securities from the exercise of an out-of-the-money [42] option, warrant or right shall not be exempt.

(a) Would the settlement of a security future through delivery or receipt of the underlying equity security be exempted by Rule 16b–6(b)?

(b) Would cash settlement of a security future be exempted by Rule 16b–6(b)?

A12: (a) The disposition of a security future and delivery or receipt of the underlying security upon settlement would be exempted by Rule 16b–6(b). The provision in Rule 16b–6(b) that excludes from the exemption the exercise of out-of-the-money options would not apply. Unlike certain option contracts, where the holder of the option can choose whether or not and (in the case of American style options) when to exercise the option, a security future creates an obligation either to purchase or sell the underlying securities at a specified future date. Accordingly, the physical settlement of a security future is more similar to a conversion for purposes of Rule 16b–6(b). An out-of-the-money conversion that otherwise complies with Rule 16b–6(b) is exempt under that Rule.

(b) For purposes of section 16, cash settlement of a security future, like the cash settlement of any other derivative security, involves the deemed sale of the underlying securities in addition to the transactions described in (a) above that take place upon physical settlement.[43] Where an insider holds a long security future position, cash settlement would involve the insider's deemed sale of the underlying securities back to the counterparty. Where an insider holds a short security future position, cash settlement would involve the insider's deemed repurchase of the underlying securities from the counterparty. Rule 16b-6(b) exempts only the transactions described in (a) above, and does not

[38] 17 CFR 240.16b–6(c)(2). Exchange Act Rule 16b-6(c)(2) sets forth the methods for determining the profits recoverable under section 16(b) from short-swing transactions involving derivative securities with different characteristics but related to the same underlying security (*e.g.,* the purchase and sale of call options with different strike prices and expiration dates), and from short-swing transactions involving derivative securities and the underlying security. Under Rule 16b–6(c)(2), profits from short-swing transactions involving derivative securities having different characteristics but related to the same underlying security, or involving derivative securities and the underlying security, cannot exceed the difference in price of the underlying security on the date of purchase or sale and the date of sale or purchase.

[39] Offset refers to the method of closing or liquidating an outstanding long or short security future position through an opposite trade (*i.e.,* an equal and opposite transaction to the one that opened the position). Offset will occur only if the purchase or sale matches the original security future transaction with respect to the underlying security, number of security futures, and delivery month. Once a party has offset his or her outstanding security future position, the party has no further obligations with respect to the original transaction or the offsetting transaction.

[40] See, for example, *Smolowe* v. *Delendo Corp.,* 136 F.2d 231 (2d Cir. 1943), *cert. denied* 320 U.S. 751 (1943), regarding ''lowest price in highest price out'' profit computation. Under this method, recoverable profit is computed by matching the highest sale price with the lowest purchase price within six months, the next highest sale price with the next lowest purchase price within six months, and so on, until all shares have been included in the computation.

[41] 17 CFR 240.16b–6(b).

[42] For a person who has a long security future position, the security future would be ''out-of-the-money,'' as that term is used in Rule 16b–6(b), if the settlement price of the security future is above the market price of the underlying security on the settlement date. Conversely, a short security future position would be ''out-of-the money'' if the settlement price of the security future is above the market price of the underlying security on the settlement date.

[43] *See* Securities Exchange Act Release No. 28869 (February 8, 1991), 56 FR 7242 (February 21, 1991).

exempt either of these additional transactions.

Q13: Generally, persons subject to the reporting requirements of section 16 must file a report on Form 4 within ten days after the close of any month in which a change in beneficial ownership has occurred in the equity securities of the subject issuer. Unlike most transactions exempt from section 16(b), which are eligible for deferred reporting on Form 5, exercises and conversions of derivative securities that are exempt from section 16(b) must be reported on Form 4.[44] General Instruction 8 of Form 4 specifies transaction codes that should be used to identify the type of transaction being reported. What codes should be used to identify insiders' transactions in security futures?

A13: Transactions in security futures should be reported as follows:

- Purchase of a security future should be identified in Table II, column 4 of the form with transaction code ''P.''
- Sale of a security future should be identified in Table II, column 4 of the form with transaction code ''S.''
- Physical settlement of a long security future should be identified in Table I, column 3 and Table II, column 4 with transaction code ''C.''
- Physical settlement of a short security future should be identified in Table I, column 3 and Table II, column 4 with transaction code ''C.''
- Cash settlement of a long security future should be identified in Table I, column 3 and Table II, column 4 with transaction code ''C,'' and with transaction code ''S'' on a separate line in Table I, column 3 (to report the deemed sale of the underlying securities).
- Cash settlement of a short security future should be identified in Table I, column 3 and Table II, column 4 with the transaction code ''C,'' and with transaction code ''P'' on a separate line in Table I, column 4 (to report the deemed repurchase of the underlying security).

Q14: Exchange Act Rule 16c–4 provides that establishing or increasing a put equivalent position is exempt from section 16(c) so long as the amount of securities underlying the put equivalent position does not exceed the amount of underlying securities otherwise owned by the insider. How would Rule 16c–4 apply to an insider's sale of a security future?

A14: For the duration of the insider's put equivalent position pursuant to the security future, an insider who sells a security future must otherwise own an amount of the underlying securities sufficient to cover his or her delivery obligations under the security future. In computing the amount of underlying securities otherwise owned, an insider may include securities of the same class as the underlying securities on deposit in a margin account.

Example: The common stock of Company XYZ is registered under section 12 of the Exchange Act. On May 5, 2003, S, an officer of Company XYZ, owns 10,000 shares of XYZ common stock. On May 5, 2003, S sells 100 December delivery security futures on XYZ common stock. This sale establishes a ''put equivalent position'' with respect to 10,000 shares of XYZ common stock (each security future is on 100 shares of Company XYZ common stock). S deposits 2,000 shares of Company XYZ common stock as margin on the security futures. Interpretation: Including the 2,000 shares of XYZ common stock S deposited for margin, S otherwise owns a sufficient amount of XYZ shares to cover his obligation to deliver 10,000 XYZ shares upon settlement of the security futures within the meaning of Rule 16c–4. S must continue to otherwise own 10,000 shares of XYZ common stock for the duration of the put equivalent position with respect to the 100 December delivery security futures.

Q15: Are the securities underlying a long security future that calls for physical settlement considered ''otherwise owned'' for purposes of Rule 16c–4?

A15: An insider who is long a security future does not ''otherwise own'' the securities underlying the security future until he or she is obligated to accept delivery under the security future (*i.e.,* if the security future is not offset prior to the close of trading for that security future on the last trading day). Once an insider is obligated to accept delivery, he or she may include the securities underlying the security future in computing the amount of underlying securities ''otherwise owned.'' An insider who is long a cash-settled security future does not ''otherwise own'' the underlying securities.

Example: The common stock of Company XYZ is registered under Section 12 of the Exchange Act. S, an officer of Company XYZ, does not own any shares of XYZ common stock. On May 5, 2003, S purchases 10 December delivery security futures on XYZ common stock. Each security future is on 100 shares of XYZ common stock. The last trading day of the December delivery security futures is the third Friday in December (December 19, 2003). S wishes to buy put options on 1000 shares of XYZ common stock on or after December 19, 2003. Interpretation: S becomes obligated to accept delivery of the 1000 XYZ common shares underlying the 10 December delivery security futures after the close of trading on December 19, 2003. Accordingly, as of the close of trading on December 19, 2003, S is deemed to otherwise own those 1000 XYZ common shares for purposes of Rule 16c–4. Therefore, S's purchase of put options on 1000 shares of XYZ common stock after the close of trading on December 19, 2003, would be exempt from Section 16(c) pursuant to Rule 16c–4.

2. Mergers and Acquisitions Issues

Beneficial Ownership Disclosure Requirements: Exchange Act Regulation 13D[45]

Rule 13d–1 of the Exchange Act[46] requires any person who becomes a beneficial owner of more than five percent of a class of equity security[47] to file a statement containing the information required by either Schedule 13D or Schedule 13G.[48] Under Exchange Act Rule 13d–3(a),[49] a person

[44] Exchange Act Rule 16a–3(f)(1)(i)(A) [17 CFR 240.16a–3(f)(1)(i)(A)].

[45] Regulation 13D also encompasses the Schedule 13G requirements.

[46] 17 CFR 240.13d–1.

[47] For the purpose of Regulation 13D, the term ''equity security'' is defined in Rule 13d–1(i) (17 CFR 240.13d–1(i)) as any equity security of a class which is registered under section 12 of the Exchange Act (15 U.S.C. 78*l*), or any equity security of any insurance company which would have been required to be registered under the Exchange Act except for the exemption contained in section 12(g)(2)(G) of the Exchange Act (15 U.S.C. 78*l*(g)(2)(G)), or any equity security issued by a closed-end investment company registered under the Investment Company Act of 1940 (15 U.S.C 80a *et seq.*). The term does not include securities of a class of non-voting securities.

[48] 17 CFR 240.13d–101 or 240.13d–102. Unless otherwise exempt, a person acquiring more than five percent of a class of equity security must file a Schedule 13D within 10 days of the acquisition. A Schedule 13D filer must disclose, among other things, his or her identity and background, the source and amount of funds used to acquire the securities, the purpose of the acquisition and any plans or proposals of the filer concerning the issuer. Institutional investors who acquire more than five percent of a class of equity security in the ordinary course of business, and not with the purpose or effect of changing or influencing control of the issuer, may file the short-form Schedule 13G, in lieu of the Schedule 13D, within 45 days after the end of the calendar year. Passive investors who acquire more than 5% of a class of equity security, but less than 20% of the class, and not with the purpose or effect of changing or influencing control of the issuer, may file the short-form Schedule 13G, in lieu of the Schedule 13D, within 10 days after the acquisition. A Schedule 13G filer must disclose, among other things, his or her identity, residence and citizenship, and amount of securities beneficially owned.

[49] 17 CFR 240.13d–3(a). The Rule states that voting power includes the power to vote or to direct the voting of the security, and that investment

Continued

is deemed to be the beneficial owner of a security, for purposes of sections 13(d) and 13(g) of the Exchange Act,[50] if that person has or shares voting and/or investment power with respect to the security. The Rule deems a person to be the beneficial owner of a security if that person has the right to acquire beneficial ownership of the security within 60 days, including, but not limited to, a right to acquire it through exercise of an option, warrant, right or through the conversion of another security.[51] Any person who acquires the right to acquire a security in this manner with the purpose or effect of changing or influencing control of the issuer of the security is immediately deemed to be the beneficial owner of the security upon acquisition of the right to acquire the security, regardless of when the right is exercisable.[52]

Q16: Is a security future an ''equity security'' that is reportable under Regulation 13D?

A16: No. Security futures are not covered by the Rule 13d–1(i) definition of ''equity security'' [53] because they are exempt from registration under section 12 of the Exchange Act.[54]

Q17: Would the equity securities underlying a security future that requires physical settlement of the security future be counted for purposes of determining whether the purchaser of the security future is subject to the Regulation 13D beneficial ownership reporting requirements?

A17: Yes, but only during the period when there are 60 or fewer days before the last trading day, or immediately upon purchase of the security future if it was acquired for the purpose of changing or influencing control of the issuer of the underlying securities.[55]

Example 1: On June 3, 2002, W purchases 100 security futures for December delivery. Each security future calls for physical delivery of 100 shares of Company XYZ common stock. The last trading day of the December delivery contracts is December 20, 2002. Before his acquisition of the security futures, W was not required to file a beneficial ownership report on either Schedule 13D or 13G. Interpretation: On the purchase date, June 3, 2002, W does not have to count the shares of Company XYZ common stock underlying the security futures contracts for purposes of determining beneficial ownership under Rule 13d–3 because this date is more than 60 days from the last trading day of the security futures.[56] If W has not offset the security futures on or before October 21, 2002, W would count the shares of XYZ common stock underlying the security futures for purposes of determining whether he is subject to the Regulation 13D beneficial ownership reporting requirements.

Example 2: Same facts as in Example 1 above, except W purchases the December delivery security futures (with the last trading day of December 20, 2002) on Company XYZ common stock on October 23, 2002. The amount of Company XYZ common stock beneficially owned by W before his purchase of the security futures, combined with the shares of Company XYZ common stock underlying the contracts, brings W above the five percent beneficial ownership threshold. Interpretation: W must file a Schedule 13D or 13G within 10 days after his purchase of the security futures.[57]

Q18: Would the equity securities underlying a security future that requires cash settlement be counted for purposes of determining whether the purchaser of the contract is subject to the Regulation 13D beneficial ownership reporting requirements?

A18: No. A purchaser of a cash-settled security future (*i.e.,* a security future that, by its terms, must be settled by a cash payment) would not count the equity securities underlying the contract for purposes of determining whether he or she is subject to the Regulation 13D reporting requirements, because he or she does not have the right to acquire beneficial ownership of the underlying security.

Q19: If the equity securities underlying a security future that requires physical settlement are counted for purposes of determining beneficial ownership under Regulation 13D, would the securities underlying a security future that is purchased to liquidate or offset an existing security future position be counted for purposes of determining beneficial ownership?

A19: No, but only to the extent that the offsetting purchase does not establish a new security future position. If a purchaser buys a security future to offset an outstanding short position, the purchaser has no obligation to accept delivery of the securities underlying the long security future.[58]

Q20: Other than for purposes of determining beneficial ownership, how does the purchase or sale of a security future affect Schedule 13D disclosure?

A20: As with other derivative contracts overlying an ''equity security'' under Rule 13d-1(i), a purchaser or seller of a security future who is subject to Schedule 13D reporting requirements with respect to the underlying security may have to amend Schedule 13D to disclose his or her transactions in security futures on securities of a class of equity security beneficially owned by such person, whether settled by physical delivery or in cash. For example, the purchase or sale of a security future may represent a change in the source of funds under Item 3 of Schedule 13D, a possible shift in purpose under Item 4 (particularly to the extent that the transaction is part of a plan or proposal to dispose of Company XYZ securities that W did not disclose previously), or a ''transaction'' in the subject security under Item 5. Furthermore, the security future would be a ''contract, agreement, understanding, or relationship * * * with respect to * * * securities of the issuer'' under Item 6. A Schedule 13G filer would disclose transactions in security futures in accordance with Regulation 13D and the item requirements of Schedule 13G.

B. Guidance on Statutory Provisions and Rules Administered by the Division of Market Regulation

1. Market Supervision Issues

The Duty of Best Execution

Broker-dealers have long been subject to a duty of best execution when effecting securities transactions for customers. This duty derives from

power includes the power to dispose, or to direct the disposition of the security.

[50] 15 U.S.C. 78m(d) and (g).

[51] Rule 13d–3(d)(1)(i) (17 CFR 240.13d–3(d)(1)(i)). Additionally, the Rule deems a person to be the beneficial owner of a security if the person has the right to acquire beneficial ownership of the security within 60 days pursuant to the power to revoke a trust, discretionary account, or similar arrangement through the termination of a trust, discretionary account or similar arrangement. *See* Rule 13d–3(d)(1)(i)(C) and (D) (17 CFR 240.13d–3(d)(1)(i)(C) and (D)).

[52] Rule 13d–3(d)(1) (17 CFR 240.13d–3(d)(1)).

[53] *See supra* note .

[54] Exchange Act section 12(a) (15 U.S.C. 78l(a)) exempts security futures traded on a national securities exchange from registration under both sections 12(b) and section 12(g) of the Exchange Act (15 U.S.C. 78l(b) and (g)). Exchange Act section 12(g) clarifies that security futures are not equity securities of the issuer of the underlying securities.

[55] *See supra* note.

[56] This example assumes that the security futures were not purchased with the purpose or effect of changing or influencing control of the issuer.

[57] In this example, W would be eligible to file on the short-form Schedule 13G if he is an institutional or passive investor and can certify that he did not purchase the security futures for the purpose of changing control of Company XYZ, and the purchase did not have the effect of changing control of Company XYZ. *See* Rule 13d–1(b) and (c) (17 CFR 240.13d–1(b) and (c)).

[58] *See supra* note . A transaction is not an offsetting transaction if it does not liquidate the previously established security future position. Once a security future has been offset, the obligation to accept or make delivery of the underlying securities or to accept or make payment of the value of the underlying securities (in the case of a cash settled security future) is canceled.

common law agency principles and fiduciary obligations, and has been incorporated in self-regulatory organization rules and, through judicial and Commission decisions, in the enforcement of the antifraud provisions of the federal securities laws. Questions have arisen as to the applicability of this duty to security futures products.

Q21: Does the duty of best execution apply to security futures products?

A21: Yes. The duty of best execution requires a broker-dealer ''to seek the most favorable terms reasonably available under the circumstances for a customer's transaction.''[59] The duty of best execution is not limited by the type of transaction or security involved and applies equally to security futures products.

Q22: Are broker-dealers expected to comply with the duty of best execution in the absence of national market system mechanisms for security futures products?

A22: Yes. While the national market system mechanisms adopted under the Exchange Act were designed in part ''to assure * * * the practicability of brokers executing investors'' orders in the best market,''[60] the duty of best execution predates the national market system provisions of the federal securities laws. Accordingly, the Commission has never considered the duty of best execution to be contingent on the existence of such mechanisms.[61] Best execution obligations, for example, also apply to securities for which national market system plans do not exist, such as government securities and corporate debt.[62]

Q23: Are broker-dealers expected to comply with the duty of best execution with respect to instruments that may not be standardized or fungible across markets?

A23: As noted above, the duty of best execution requires a broker-dealer to seek the most favorable terms reasonably available under the circumstances for a customer's transaction. In the absence of specific instructions from a customer, a broker-dealer has an obligation to use reasonable efforts to execute customer orders in the market that maximizes the economic benefit to the customer.[63] The Commission recognizes that it would be difficult to apply these principles to contracts that are materially different as to their terms. If the customer has specified the market or contract in which to trade, the broker-dealer must seek to achieve the best possible execution within that market. If the customer has not specified the market or contract, the Commission reminds broker-dealers that, even with respect to contracts that are materially different, they should consider the applicability of other agency or fiduciary duties, including suitability.

2. Trading Practices Issues [64]

a. Short Sale Regulation: Exchange Act Rules 10a–1 and 3b–3

A short sale is the sale of a security that the seller does not own or that the seller owns but does not deliver. The Commission has plenary authority to regulate short sales of securities registered on a national securities exchange (listed securities) as necessary to protect investors under Section 10(a) of the Exchange Act.[65] The Commission adopted Exchange Act Rule 10a–1 [66] to restrict short selling in a declining market.[67] Specifically, Rule 10a–1(a)(1) provides that, subject to certain exceptions, a listed security may be sold short: (i) At a price above the price at which the immediately preceding sale was effected (plus tick), or (ii) at the last sale price if it is higher than the last different price (zero-plus tick). Conversely, short sales are not permitted on minus ticks or zero-minus ticks, subject to narrow exceptions. The operation of these provisions constitute what is commonly described as the ''tick test.''

Exchange Act Rule 3b–3 defines the term ''short sale'' as any sale of a security that the seller does not own or any sale that is consummated by the delivery of a security borrowed by, or for the account of, the seller. Rule 3b–3 also defines specific instances when a person shall be deemed to own a security, *i.e.,* a long position.

Q24: Will sales of security futures be subject to Rule 10a–1?

A24: No. In authorizing the trading of futures contracts involving single stocks and narrow-based security indices, Congress exempted security futures products from the operation of Section 10(a)(1) of the Exchange Act under which Rule 10a–1 is adopted.[68]

Q25: Does a security future convey ownership under Rule 3b–3 for the purposes of short sale regulation?

A25: A person who holds a security future obligating him to take delivery of the underlying securities by physical settlement would not be considered long these securities for the purposes of Rule 3b–3 until the security future terminates trading.[69] This interpretation is consistent with the way Rule 3b–3 addresses several instances where a person owns a security that entitles a person to acquire securities underlying the instrument, *e.g.,* options, rights, warrants, and convertibles. In those instances, Rule 3b–3 requires the option, right, warrant, or convertible to be exercised, tendered, or converted before the person can be considered as having a long position in the underlying security. These provisions also implicitly contemplate that the person will shortly acquire the security being sold. For a physically-settled security future, the holder will obtain the underlying security only after the security future terminates trading. A security future settled by receipt of cash has no effect on a person's long position.

b. Safe Harbor for Issuer Repurchases: Exchange Act Rule 10b–18

Exchange Act Rule 10b–18 [70] provides a non-exclusive ''safe harbor'' from liability for manipulation under sections 9(a)(2) and 10(b) of the Exchange Act, and Rule 10b–5 under the Exchange Act, when an issuer or its affiliated purchaser bids for or purchases shares of the issuer's common stock in accordance with the Rule's manner, timing, price, and volume conditions. Because Rule 10b–18 is a voluntary safe harbor, an issuer is not required to comply with the provisions of the Rule when making market purchases, and no adverse inference about manipulation may be drawn if an issuer's purchases do not satisfy the Rule's conditions or are not covered by the Rule. Rule 10b–18's conditions are

[59] Securities Exchange Act Release No. 37619A (September 6, 1996), 61 FR 48290, 48322 (September 12, 1996).

[60] 15 U.S.C. 78k–1(a)(1)(C)(iv).

[61] *See* Securities Exchange Act Release No. 43591 (November 17, 2000), 65 FR 75439, 75439–40 (December 1, 2000) (discussing best execution obligations with respect to exchange-listed options).

[62] *See* NASD Rule 2320.

[63] *See Newton* v. *Merrill, Lynch, Pierce, Fenner & Smith, Inc.,* 135 F.3d 266, 270 (3d Cir. 1998) (en banc); NASD Rule 2320.

[64] Exchange Act Rules 15c2–4 and 15c2–8 [17 CFR 240.15c2–4 and 240.15c2–8] apply to sales of security futures by brokers and dealers that constitute distributions. We anticipate that security futures will be issued by clearing agencies, and brokers and dealers therefore will not participate in distributions of security futures. If brokers and dealers, however, participate in a distribution of security futures, we will address any questions regarding Rules 15c2–4 and 15c2–8 at that time.

[65] 15 U.S.C. 78j(a).

[66] 17 CFR 240.10a–1.

[67] *See* Securities Exchange Act Release No. 1548 (January 24, 1938), 3 FR 213 (January 26, 1938).

[68] *See* 15 U.S.C. 78j(a)(2).

[69] Termination of trading is the moment at which an open position in a security future, either a long or short position, can no longer be closed or liquidated either by buying or selling an opposite position. Similarly, a person obligated to deliver would be considered short at the termination of trading.

[70] 17 CFR 240.10b–18.

designed to limit the market impact of the issuer's repurchase activity. In so doing, Rule 10b–18 provides a measure of assurance to investors that a security's market price is based on independent market forces and not influenced in a manipulative manner by the issuer.

Q26: Is the Rule 10b–18 safe harbor available for issuer repurchase transactions involving security futures (including the receipt of securities underlying such futures)?

A26: No. Rule 10b–18 only applies to what is defined as a ''Rule 10b–18 purchase.'' [71] A Rule 10b–18 purchase encompasses only purchases by an issuer or its affiliate of its common stock. It does not apply to any other type of security—even if related to the common stock (*e.g.,* transactions in derivative securities such as warrants, options, or security futures that are physically-settled).[72] Thus, consistent with the treatment of options under Rule 10b–18, we view the term ''Rule 10b–18 purchase'' as not including issuer repurchase transactions involving security futures (including the receipt of securities underlying such futures).

c. The Short Tender Rule: Exchange Act Rule 14e–4

Exchange Act Rule 14e–4,[73] commonly referred to as the ''short tender rule,'' is generally designed to preclude persons from tendering more shares than they own in order to avoid or reduce the risk of pro rata acceptance in a partial tender offer. A person may tender shares into a partial tender offer only if both at the time of tender and at the end of the proration period the person has a ''net long position'' in the subject security or an equivalent security equal to or greater than the amount tendered into the partial tender offer. Under Rule 14e–4, a person's ''net long position'' in a subject security equals the excess, if any, of such person's ''long position'' over a person's ''short position.'' The calculation of the net long position must be done both at the time of tender and at the end of the proration period, or period during which securities are accepted by lot, including any extension thereof.

Q27: How should a security future be considered in calculating a person's *long position* for the purposes of Rule 14e–4 when the underlying security is the subject of a partial tender offer?

A27: A person who holds a security future obligating him to take delivery of a subject security by physical settlement will be considered to be long the subject security for the purposes of Rule 14e–4 only after the security future terminates trading.[74] This interpretation is consistent with the treatment of standardized options positions in Rule 14e–4. The owner of a standardized option in a subject security is not considered to be long the underlying security under Rule 14e–4 for tendering purposes until the standardized option is exercised. A security future settled by receipt of cash has no effect on the shareholder's long position.

Q28: How should a security future be considered in calculating a person's *short position* for the purposes of Rule 14e–4 when the underlying security is the subject of a partial tender offer?

A28: In order to prevent hedged tendering and over-tendering, Rule 14e–4 requires a person tendering into a partial tender offer to include in the calculation of his or her short position the amount of subject securities such person is obligated to deliver pursuant to a security future that was entered into on or after the date that a tender offer is first publicly announced or otherwise made known by the bidder to the holders of the security to be acquired, if the security future terminates trading at or before the end of the proration period. If one or more tender offers for the same security are ongoing on such date, the announcement date shall be that of the first announced offer. This requires inclusion of the amount of such subject securities in the person's short position, regardless of the price of the security future relative to the price of the subject security underlying the security future, because (in contrast to an option, discussed below) the security future requires the person to deliver the securities upon maturity.

This interpretation is consistent with the treatment of standardized options positions in Rule 14e–4. Rule 14e–4 requires a person tendering into a partial tender offer to include in the calculation of his or her short position the amount of subject securities that the person is obligated to deliver upon exercise of a standardized in-the-money call option that was sold on or after the date that a tender offer is first publicly announced or otherwise made known by the bidder to the holders of the security to be acquired. For purposes of Rule 14e–4, in-the-money call options are those options with strike prices below the highest tender offer price or stated amount of consideration offered for the subject security. A security future settled by receipt of cash has no effect on the person's short position.[75]

d. Purchases Outside of a Tender Offer: Exchange Act Rule 14e–5

In connection with a tender offer for equity securities, Rule 14e–5 of the Exchange Act [76] generally prohibits a covered person from directly or indirectly purchasing or arranging to purchase outside of the tender offer (i) the securities or class of securities that are sought to be acquired in the transaction or that are otherwise the subject of the transaction (''subject securities''), or (ii) securities that are immediately convertible into, exchangeable for, or exercisable for subject securities (''related securities'').[77]

Q29: Would Rule 14e–5 apply to the purchase by a covered person of security futures during a tender offer for the securities underlying the security futures?

A29: The security futures would not be subject securities. Nor would the security futures be related securities because they would not be ''immediately convertible into, exchangeable for, or exercisable for'' the subject securities (*i.e.,* the underlying securities). However, if the security futures provide for physical settlement, and the security futures will terminate trading [78] prior to expiration of the tender offer, the purchase of the security futures would be prohibited under Rule 14e–5 as an arrangement (*i.e.,* the security future contract) to purchase subject securities (*i.e.,* the underlying securities) during the tender offer.

Q30: Would Rule 14e–5 prohibit the physical settlement of a long security futures position by a covered person during a tender offer for the underlying security?

A30: The acquisition of the underlying securities upon physical settlement of a long security futures position would be considered a purchase of subject securities. Rule 14e–5(b)(1), however, permits transactions by covered persons to convert, exchange, or exercise related securities owned *before* public announcement of

[71] *See* Exchange Act Rule 10b–18(a)(3) (17 CFR 240.10b–18(a)(3)).

[72] Rule 10b–18 also would not apply to security futures that are cash-settled, as these products do not result in a purchase of the common stock for purposes of the Rule.

[73] 17 CFR 240.14e–4.

[74] *See supra* note 69 (explaining termination of trading).

[75] Further, the holder of a cash-settled futures contract is not considered to own the subject securities underlying the contract for purposes of Rule 14e–4, and so cannot tender shares on the basis of the security future. As such, security futures settled by receipt of cash have no effect on the number of subject securities eligible to be tendered into an offer.

[76] 17 CFR 240.14e–5.

[77] Relevant terms are defined in paragraph (c) of Rule 14e–5.

[78] *See supra* note 69.

the tender offer into subject securities. Because the acquisition of subject securities upon the physical settlement of security futures is substantially similar to acquisitions of subject securities by conversion, exchange or exercise of other securities, the acquisition of underlying securities that are the subject of a tender offer upon physical settlement of a long security futures position is within the Rule 14e–5(b)(1) exception, if the covered person owned the security futures before public announcement of the tender offer.

Q31: Would Rule 14e–5 prohibit the acquisition of subject securities to satisfy an obligation to deliver those securities upon physical settlement of a short position in security futures?

A31: The acquisition of the underlying securities in order to physically settle a short position in security futures would be considered a purchase of subject securities. Rule 14e–5(b)(6), however, permits purchases that are made to satisfy an obligation to deliver a subject security arising from the exercise of an option by a non-covered person or a short sale, provided that (i) the short sale or option was established before public announcement of the tender offer, and (ii) the short sale or option transaction was made in the ordinary course of business and not to facilitate the offer. Because the acquisition of subject securities upon the physical settlement of a short security futures position is substantially similar to the acquisition of subject securities in a covering transaction arising from a short sale or the exercise of an option by a non-covered person, the acquisition is within the Rule 14e–5(b)(6) exception, provided the obligation to settle by physical delivery was established before public announcement of the tender offer and the security future transaction was made in the ordinary course of business and not to facilitate the offer.

Q32: Would Rule 14e–5 apply to the cash settlement by a covered person of a long security futures position?

A32: No. The cash settlement of a long security futures position would not involve an acquisition of the securities underlying the security futures.

e. Anti-manipulation Rules Regarding Distributions: Regulation M

Regulation M[79] is intended to preclude manipulative conduct by persons with an interest in the outcome of an offering of securities. It governs the activities of underwriters, issuers, selling security holders, and others that participate in the offering, as well as their affiliated purchasers. Regulation M prohibits such persons from directly or indirectly bidding for, purchasing, or attempting to induce any person to bid for or purchase, any security that is the subject of a distribution (a ''subject security''), or any ''reference security'' (together, ''covered securities''), until after the applicable restricted period.[80]

Q33: Would Regulation M apply to the purchase of security futures during a distribution of the securities underlying the security futures?

A33: Yes. The purchase of the security futures would be considered within the prohibition against directly or indirectly bidding for, purchasing, or attempting to induce any person to bid for or purchase, a covered security (*i.e.,* the underlying securities) because, at a minimum, the purchase of the security futures would be an indirect purchase of a covered security.

Q34: Is the actively-traded securities exception available in connection with acquisitions of security futures during distributions of the underlying stock?

A34: The actively-traded securities exception under Rule 101(c)(1) would be available to acquisitions of security futures by distribution participants and their affiliated purchasers where the underlying securities are actively-traded securities. However, that exception is not available to purchases of security futures by issuers, selling security holders, or affiliated purchasers of the underlying securities who are governed by Rule 102(d)(1).[81]

Q35: Would Regulation M prohibit the physical settlement of a long security futures position during a distribution of the underlying security?

A35: The acquisition of the underlying security upon physical settlement of a long security futures position would be considered the purchase of a covered security. Rules 101(b)(4) and 102(b)(4), however, permit distribution participants, and issuers and selling shareholders, respectively, to acquire a covered security through the exercise of any option, warrant, right, or any conversion privileges set forth in the instrument governing a security. In adopting these exceptions, the Commission stated that it believes that exercises or conversions of derivative securities generally have an uncertain and attenuated manipulative potential.[82] Because the acquisition of underlying securities upon physical settlement of a long security future is substantially similar to the acquisition of a covered security upon the exercise of an option, warrant, right, or conversion privilege, the acquisition is within the exceptions in Rules 101(b)(4) and 102(b)(4).

Q36: Would Regulation M apply to the cash settlement of a long security futures position?

A36: No. Regulation M would not prohibit the cash settlement of a long security futures position.

3. Other Broker-Dealer Issues

a. Eligible OTC Derivative Instruments: Exchange Act Rule 3b–13

OTC derivatives dealers are a class of registered dealers that limit their trading to eligible over-the-counter derivative products and certain related transactions.[83] Registration with the Commission as an OTC derivatives dealer is an alternative to registration as a full broker-dealer.[84] OTC derivatives dealers may engage in dealer activities in ''eligible OTC derivative instruments,'' as that term is defined in Exchange Act Rule 3b–13.[85] OTC derivatives dealers may also engage in certain additional securities activities related to conducting an OTC derivatives business.[86]

Q37: Would security futures products be eligible OTC derivative instruments as defined in Exchange Act Rule 3b–13?

A37: No. Exchange Act Rule 3b–13(b)(2)(i) defines an eligible OTC derivative instrument, and specifically excludes from the definition of eligible OTC derivative instrument a security that is listed or traded on a securities exchange. Security futures products are

[79] 17 CFR 242.100–242.105.

[80] Relevant terms, including ''distribution,'' ''reference security,'' and ''restricted period,'' are defined in Rule 100 of Regulation M.

[81] *See* 17 CFR 242.102.

[82] Securities Exchange Act Release No. 38067 (December 20, 1996), 62 FR 520, 528 (January 3, 1997).

[83] *See* 17 CFR 240.3b–12.

[84] *See* Securities Exchange Act Release No. 40594 (October 23, 1998), 63 FR 59362 (November 3, 1998).

[85] 17 CFR 240.3b–13.

[86] *Id.* In particular, an OTC derivatives dealer must limit its securities activities to: (1) Engaging in dealer activities in eligible OTC derivative instruments (as defined in Rule 3b–13) that are securities; (2) issuing and reacquiring securities that are issued by the dealer, including warrants on securities, hybrid securities, and structured notes; (3) engaging in cash management securities activities (as defined in Rule 3b–14); (4) engaging in ancillary portfolio management securities activities (as defined in Rule 3b–15); and (5) engaging in such other securities activities that the Commission designates by order pursuant to Rule 15a–1(b)(1). 17 CFR 240.3b–12(a). In addition, such dealer's securities activities must consist primarily of those described in categories (1) through (3), 17 CFR 240.3b–12(b), and do not consist of any other securities activities, including engaging in any transaction in any security that is not an eligible OTC derivative instrument, except as permitted in categories (3) through (5). 17 CFR 240.3b–12(c). Moreover, an OTC derivatives dealer must also be affiliated with a fully regulated broker-dealer. 17 CFR 240.3b–12.

exchange listed instruments.[87] Because a security futures product is a security that is listed on a registered national securities exchange, it is excluded from the definition of an eligible OTC derivative instrument.[88] Accordingly, an OTC derivatives dealer that wishes to engage in activities involving security futures products would be limited to those activities permissible in securities that are not eligible OTC derivative instruments—activities such as ancillary portfolio management securities activities.[89]

b. Addressing Conflicts Associated With Proprietary Trading and Trading for Discretionary Accounts by Exchange Members: Exchange Act Section 11(a)

Section 11(a) of the Exchange Act[90] prohibits a member of a national securities exchange (other than a notice-registered exchange) from effecting transactions on that exchange for its own account, the account of an associated person, or an account over which it or its associated person exercises investment discretion, unless an exemption applies. Members of notice-registered futures exchanges are exempt from section 11(a) for purposes of their activities on those notice-registered exchanges, but are subject to a similar restriction.[91]

Congress enacted section 11(a) to encourage fair dealing and fair access in the exchange markets by reducing the conflicts arising from an exchange member trading for its own account in the public exchange markets.[92] Exempt from this prohibition are certain types of transactions that ''* * * contribute to the fairness and orderliness of exchange markets or which have not given rise to serious problems.''[93] For instance, section 11(a)(1)(A) provides an exemption from the prohibitions of section 11(a) for any transaction by a dealer acting in the capacity of a market maker.[94] Another type of transaction specifically exempted from section 11(a) is ''any bona fide hedge transaction involving a long or short position in an equity security and a long or short position in a security entitling the holder to acquire or sell such equity security. * * *''[95] The Commission implemented this exemption in 1979 by adopting Exchange Act Rule 11a1–3(T).[96]

Q38: Are both cash-settled and physically-settled security futures securities ''entitling the holder to acquire or sell an equity security'' so as to permit stock-to-futures, options-to-futures and futures-to-futures hedging transactions?

A38: Yes. Security futures are classic futures contracts—agreements to buy or sell a specific amount of a security at a particular price on a stipulated future date. Whether settlement on that date is done by cash or by physical delivery of the underlying securities, such an instrument can be used as a hedging vehicle.

From a regulatory perspective, cash-settlement is not a determinative factor in this context. The Commission has long considered security options that are cash-settled, as opposed to physically-settled, to be ''options on securities'' within the definition of security in Exchange Act section 3(a)(10).[97] Such an approach helps to ''meet the countless and variable schemes devised by those who seek the use of money of others on the promise of profits.''[98] For similar reasons, whether cash or physically-settled, security futures are securities ''entitling the holder to acquire or sell an equity security'' as contemplated by Rule 11a1–3(T).

Moreover, Congress did not intend to impose excessively rigid limits on the activities of arbitrageurs and other specialized traders in connection with transactions of the types listed in section 11(a)(1)(D), which includes bona fide hedge transactions.[99] Section 11(a)(1) was not designed to narrow or unduly complicate arbitrage activities and hedging transactions.[100] Because

[87] *See* Exchange Act Sections 6(h)(1) [15 U.S.C. 78f(h)(1)].

[88] Exchange Act Rule 3b–13(b)(2)(i) specifically excludes from the definition of eligible OTC derivative instrument a contract, agreement or transaction that provides, in whole or in part, on a firm or contingent basis, for the purchase or sale of, or is based on the value of, or any interest in, any security, (or group or index of securities), and is listed on, or traded on or through, a national securities exchange or registered national securities association or a facility or market thereof. *See* 17 CFR 240.3b–13(b)(2)(i).

[89] Exchange Act Rule 3b–15 defines ancillary portfolio management securities activities. As the Commission explained in adopting the Rule:

These securities activities must be limited to transactions in connection with the OTC derivatives dealer's dealer activities in eligible OTC derivative instruments, the issuance of securities by the dealer, or such other securities activities that the Commission designates by order. They must also (1) be conducted for the purpose of reducing the dealer's market or credit risk or consist of incidental trading activities for portfolio management purposes; and (2) be limited to risk exposures within the market, credit, leverage, or liquidity risk parameters set forth in the trading authorizations granted to the associated person (or to the associated person's supervisor) who executes the transaction for the dealer, and in the written guidelines approved by the dealer's governing body and included in the dealer's internal risk management control system (as required under new (Exchange Act) Rule 15c3–4). Rule 3b–15 also requires that ancillary portfolio management securities activities be conducted only by associated persons of the dealer who perform substantial duties for the dealer in connection with its dealer activities in eligible OTC derivative instruments.

See Securities Exchange Act Release No. 40594 (October 23, 1998), 63 FR 59362 (November 3, 1998); 17 CFR 240.3b–15. *See also supra* note (noting generally other permissible activities).

[90] 15 U.S.C. 78k(a).

[91] As directed by the CFMA, the CFTC recently adopted rules that prohibit futures intermediaries from trading for accounts in which they have any interest, during the same trading session that they also trade for the accounts of customers, the same security futures product on the same designated contract market or registered derivatives transaction execution facility. These rules also specifically require electronic markets to adopt rules to prohibit the execution of customer orders through systems that provide an unfair advantage to market intermediaries. That unfair advantage may be a time and place advantage, or the ability to influence or guide an order once the order enters the system. *See* Commodity Exchange Act Release No. 3038–AB83 (March 1, 2002), 67 FR 11223 (March 13, 2002).

[92] *See* Securities Act Amendments of 1975, Report of the Senate Comm. on Banking, Housing and Urban Affairs to Accompany S. 249, S. Rep. No. 94–75, 9th Cong., 1st Sess. 99 (1975).

[93] Securities Acts Amendments of 1975, Report of the Senate Comm. on Banking, Housing and Urban Affairs to Accompany S. 249, S. Rep. No. 94–75, 9th Cong., 1st Sess. 99 (1975).

[94] *See* Exchange Act section 11(a)(1)(A) (15 U.S.C. 78k(a)(1)(A)); Exchange Act Section 3(a)(38) (15 U.S.C. 78c(a)(38)) (defining market maker).

[95] Exchange Act section 11(a)(1)(D) (15 U.S.C. 78k(a)(1)(D)).

[96] Exchange Act Rule 11a1–3(T) provides that:

(a) bona fide hedge transaction effected on a national securities exchange by a member for its own account or an account of an associated person thereof and involving a long or short position in a security entitling the holder to acquire or sell an equity security, and a long or short position in one or more other securities entitling the holder to acquire or sell such equity security, shall be deemed to be of a kind which is consistent with the purposes of section 11(a)(1) of the Act, the protection of investors, and the maintenance of fair and orderly markets.

17 CFR 240.11a1–3(T).

[97] Exchange Act section 3(a)(10) (15 U.S.C. 78c(a)(10)). *See, e.g.,* Brief of the SEC, *Amicus Curae,* in Support of Appellant on Issues Addressed at 10–11, *Louis S. Caiola* v. *Citibank, N.A.,* On Appeal from the United States District Court for the Southern District of New York (No. 01–7545) (explaining that Congress did not intend to exclude cash-settled options on securities from the definition of ''security'' in the Exchange Act).

[98] *SEC* v. *W.J. Howey Co.,* 328 U.S. 293, 299 (1946).

[99] *See* Securities Acts Amendments of 1975, Report of the Senate Comm. on Banking, Housing and Urban Affairs to Accompany S.249, S. Rep. No. 94–75, 9th Cong., 1st Sess. 99 (1975).

[100] *See id.* The exemption for bona fide hedge transactions in Exchange Act Rule 11a1–3(T) was drafted broadly to encompass the variety and complexity of hedging techniques. As the Commission noted when it adopted Rule 11a1–3(T):

The question whether particular combinations of stock positions and options positions result in risk reduction in each of the positions involves subjective judgments as to the volatility and risk characteristics of those positions. * * * The Commission recognizes that the calculation of volatility and risk can only be approximate, and believes that, for purposes of section 11(a)(1)(D), the determination of what constitutes an offset may be made by the use of any responsible method of calculating the risk of stock and options positions.

Securities Exchange Act Release No. 15533 (January 29, 1979), 44 FR 6093 (January 31, 1979).

the bona fide hedge exemptions in section 11(a)(1)(D) and Rule 11a1–3(T) were intended to be interpreted broadly to encompass the variety and complexity of hedging techniques, we interpret section 11(a)(1)(D) of the Exchange Act and Rule 11a1–3(T) to permit cash-to-futures, options-to-futures and futures-to-futures hedging with security futures.

Q39: Would floor traders effecting transactions in security futures products on a fully registered national securities exchange qualify for the market making exemption under section 11(a)(1)(A)?

A39: Section 11(a)(1)(A) of the Exchange Act exempts from the general prohibitions of section 11(a) any transaction by a dealer acting in the capacity of a market maker, as that term is defined in section 3(a)(38) of the Exchange Act.[101] This exemption reflects the special role of market makers in our securities markets. Section 3(a)(38) defines a market maker as ''any specialist permitted to act as a dealer, any dealer acting in the capacity of block positioner, and any dealer who, with respect to a security, holds himself out (by entering quotations in an interdealer communications system or otherwise) as being willing to buy and sell such security for his own account on a regular or continuous basis.'' As a practical matter, consistent with this definition of ''market maker,'' fully registered national securities exchanges—*i.e.,* those not registered pursuant to Exchange Act section 6(g)[102]—have established both affirmative and negative obligations, including appropriate dual trading restrictions, for specialists and other market makers.[103] Such obligations are significant, because floor traders generally buy and sell securities for their own benefit and interest, unless the market imposes obligations to serve the market or public interest. Thus, only to the extent a floor trader is acting subject to the type of exchange imposed obligations applicable to market makers in other securities, including dual trading restrictions, will such floor trader be deemed acting in a market making capacity in a security futures product on a fully registered national securities exchange.

c. Extensions of Credit: Exchange Act Section 11(d) and Exchange Act Rule 10b–16

Section 11(d) of the Exchange Act[104] generally prohibits any person that does business as both a broker and a dealer from extending credit to a customer on any security that was part of a new issue when the broker-dealer participated in the distribution of the new issue within thirty days prior to the customer's transaction.[105] Exchange Act Rule 10b-16[106] prohibits the extension of credit by a broker-dealer to a customer in connection with any securities transaction unless the broker-dealer has established procedures to ensure that the customer is given, at the time the account is opened and periodically thereafter, specified information with respect to the amount of and reasons for credit charges.[107]

A security future potentially raises various issues related to the extension of credit. For instance, questions may arise as to whether the contract should be viewed as an instrument in and of itself, or viewed as a down payment on ownership of the underlying security. We provide guidance about the security future itself and extensions of credit in relation to that instrument.

Q40: Would a security future constitute an extension of credit under section 11(d) of the Exchange Act and for purposes of the disclosure requirements of Rule 10b–16?

A40: A security future itself is not an extension of credit. The value of a security future can fluctuate throughout the life of the contract based on the value of the underlying security, with each party to the contract exposed to such fluctuations. Traditionally, marking to market of futures contracts allows gains and losses on futures contracts to be transferred regularly between contract parties throughout the life of the contract. While this practice could in a sense be viewed as involving only partial payment for a security, we believe that it actually reflects the nature of a futures contract, and not an attempt to extend credit in the sense contemplated by section 11(d) or Rule 10b–16. As one commentator on futures explained, ''margin in futures accounts does not represent partial payment of the security as it does in stock transactions. No loan is involved. Margin in futures contracts simply represents a good faith deposit against performance.''[108]

Q41: Would extensions of credit in relation to a security future be considered extensions of credit in relation to a *new issue* for purposes of section 11(d)(1)?

A41: No. We expect security futures to be issued by clearing agencies and not underwritten or distributed by broker-dealers. Although credit may be extended in relation to security futures (*e.g.,* advance funds to meet margin calls or make periodic variation payments), such extensions of credit are intended to support the margining system for futures contracts, a system set up to manage risk in the clearance and settlement system for this particular type of instrument. It is generally recognized that section 11(d)(1) is primarily intended to prohibit ''share pushing'' by broker-dealers engaged in a distribution of a new issue of non-exempted securities.[109] Further, section 11(d)(1) serves a related customer protection purpose by precluding the overextension of customers with respect to new issue securities. As stated by the staff of the Federal Reserve Bank of New York, ''inducing customers to buy new issues on margin was perceived as a sales technique used by underwriters to reduce rapidly their exposure to risk

[101] *See* 15 U.S.C. 78e(a)(38).

[102] 15 U.S.C. 78f(g).

[103] For example, registered traders in options on the American Stock Exchange (''Amex'') are subject to Amex Rule 958, prohibiting them from initiating options transactions for any account in which they have an interest except in accordance with the Rule's provisions. Moreover, section (c) of Rule 958 generally requires that when a registered trader enters a trading crowd in other than a floor brokerage capacity, or is called upon by a Floor Official or a Floor Broker acting in an agency capacity, the registered trader ''is required to make competitive bids and offers as reasonably necessary to contribute to the maintenance of a fair and orderly market and shall engage, to a reasonable degree under the existing circumstances, in dealings for his own account when there exists a lack of price continuity, a temporary disparity between the supply of and demand for option contracts of a particular series, or a temporary distortion of the price relationships between option contracts of the same class.'' *See* Amex Rule 958(c); *see also* Amex Rule 958, cmt. .01 (designating registered trader engaging in Exchange options transactions as a Specialist for purposes of certain provisions of the Exchange Act and the rules and regulations thereunder); Amex Rule 111(c) (''No Registered Trader shall effect, on the Floor of the Exchange, a transaction for an account in which he has an interest and execute as broker an off-Floor order in the same stock during the same trading session.'') (incorporated into the option rules by Amex Rule 950(c)).

[104] 15 U.S.C. 78k(d).

[105] *See* H. R. Rep. No. 1383, 73d Cong., 2d Sess. (1934) 22; *see also* S. Rep. No. 792, 73d Cong., 2d Sess. (1934) 12. Congress stated that section 11(d) ''* * * strikes at one of the greatest potential evils inherent in the combination of the broker and dealer function in the same person, by assuring that he will not induce his customers to buy on credit, securities which he has undertaken to distribute to the public.'' *Id.* This prohibition applies to the direct or indirect extension or maintenance of credit, as well as arranging for the extension or maintenance of credit. *See also supra* note (concerning expectation that security futures will be issued by clearing agencies and not broker-dealers).

[106] 17 CFR 240.10b-16.

[107] *See* Securities Exchange Act Release No. 8773 (December 8, 1969), 34 FR 19717 (December 16, 1969).

[108] *See* New York Institute of Finance, *Stocks Bonds Options Futures, Investments and Their Markets* 184 (Stuart R. Veale, ed. 1987).

[109] *See* VII Loss & Seligman, *Securities Regulation* 3290 n.420 (3d ed. 1991).

and as a technique that had resulted in credit-financed purchases which were not always appropriate for the buyers of new issues.''[110] For purposes of section 11(d)(1), we expect markets in security futures issued by clearing agencies to operate more like secondary markets than markets in new issues. Moreover, leverage in such markets should derive more from the nature of the instrument than from a desire for broker-dealers to extend credit to induce additional sales to deplete an underwriting inventory. Thus, the traditional public policy concerns underlying section 11(d)(1)'s limitations on credit activities in relation to new issues do not appear to be present for security futures. In the event private parties or broker-dealers begin to issue security futures, we might revisit extensions of credit in relation to such instruments.

Q42: Does Rule 10b–16 apply to extensions of credit related to security futures, including an extension of credit to fund a margin obligation?

A42: Yes. While the future itself is not an extension of credit, Rule 10b–16 applies to all extensions of credit, directly or indirectly, to any customer in connection with any securities transaction, including a security future. Investors in security futures, including those extended credit in connection with margining, should benefit from the transparency of credit terms fostered by this Rule.

d. Ancillary Securities Activities by Notice-Registered Broker-Dealers

Under the Exchange Act, only broker-dealers that limit their securities activities to security futures products and government securities pursuant to Exchange Act Rules 3a43–1 [111] and 3a44–1 [112] can be ''notice-registered,'' as opposed to fully registered broker-dealers.[113] Some have suggested identifying additional securities activities that would not trigger the need to fully register.

Q43: Will the Commission provide an exemption from full broker-dealer registration for notice-registered broker-dealers that engage in ancillary activities in securities other than, but in relation to, security futures products?

A43: At this time, we do not believe broad exemptive relief is necessary for any additional ancillary securities activities of notice-registered broker-dealers.[114] In providing for notice registration, Congress envisioned that a notice-registered broker-dealer would engage in only security futures product activities.[115] Limiting the scope of such notice registrants' activities serves the public interest because a wide array of broker-dealer regulations aimed at protecting investors and maintaining fair and orderly securities markets are not applied to notice-registered broker-dealers.[116] Moreover, protections afforded by those notice registrants' other regulator, the CFTC, focus on futures, not securities markets.[117] Should additional securities activities be necessary in conjunction with security futures products transactions, a notice-registered broker-dealer could direct customers to a fully registered broker-dealer or could fully register itself.[118]

Of note, futures commission merchants already offer futures on broad-based stock indexes without special relief to engage in activities in the equity securities underlying such indexes without registering as broker-dealers.[119] The intermediaries themselves may determine whether to register fully as broker-dealers in order for them to expand the scope of their securities activities. The Commission stands ready to address requests for exemptive relief, consistent with the public interest and the protection of investors, for highly delineated securities activities, where the services of a fully registered broker-dealer are unavailable and full registration is impractical.

III. Solicitation of Comments

As noted above, security futures products are new products and markets in these products have only begun to develop. Guidance provided necessarily is based on how we expect security futures products markets to operate. Accordingly, we solicit comment to identify market developments that might make it necessary to revisit our guidance or to provide guidance on additional issues.

List of Subjects in 17 CFR Parts 231 and 241

Securities.

Amendments to the Code of Federal Regulations

For the reasons set forth above, the Commission is amending title 17, chapter II of the Code of Federal Regulations as set forth below:

PART 231—INTERPRETATIVE RELEASES RELATING TO THE SECURITIES ACT OF 1933 AND GENERAL RULES AND REGULATIONS THEREUNDER

1. Part 231 is amended by adding Release No. 8107 and the release date of June 21, 2002, to the list of interpretive releases.

PART 241—INTERPRETIVE RELEASES RELATING TO THE SECURITIES EXCHANGE ACT OF 1934 AND GENERAL RULES AND REGULATIONS THEREUNDER

2. Part 241 is amended by adding Release No. 46101 and the release date of June 21, 2002 to the list of interpretive releases.

---

[110] *See* Federal Reserve Bank of New York Staff Study: Securities Credit Regulations of the Board of Governors of the Federal Reserve System, pt. 1, at 126 (1979).

[111] 17 CFR 240.3a43–1.

[112] 17 CFR 240.3a44–1.

[113] *See supra* note 5.

[114] The Commission already has addressed the issue of a notice-registered broker-dealer handling certain securities upon expiration of a security future that is physically-settled. As we stated when we adopted rules to permit notice registration, a notice-registered broker-dealer that accepts and occasionally delivers the underlying securities upon the expiration of a security future is not acting as a broker or a dealer with respect to those securities. It therefore is not required to register as a full broker-dealer. Because most futures transactions are generally closed out by offsetting transactions, and not by physical settlement, this should not be an issue for most notice-registered broker-dealers. A futures commission merchant that routinely closes out its transactions in security futures products by physical delivery, however, should register as a full broker-dealer. *See* Securities Exchange Act Release No. 44730 (August 21, 2001), 66 FR 45138 (August 27, 2001).

[115] *See* 15 U.S.C. 78o(b)(11)(A). The fact that certain financial intermediaries could want to engage in a wider range of activities that would require both full broker-dealer and full futures commission merchant registration is reflected in the statute as well. *See, e.g.,* 15 U.S.C. 78o(c)(3)(B); *supra* note 5.

In addition, previously when Congress specifically envisioned the exemption of CFTC registrants from broker-dealer registration solely for government securities activities incidental to their futures business, Congress explicitly provided a statutory basis for such action. *See* Securities Exchange Act Release No. 24726 (July 22, 1987), 52 FR 27962 (July 24, 1987) (adopting Exchange Act Rules 3a43–1 and 3a44–1 implementing amendments to Section 3(a)(43) and 3(a)(44) of the Exchange Act defining government securities broker and government securities dealer contained in the Government Securities Act of 1986).

[116] *See supra* note 5.

[117] *See, e.g.,* CEA Section 16(e) [7 U.S.C. 20(e)].

[118] In addition, in connection with the management of its proprietary account, a notice-registered broker-dealer itself could effect transactions in equity securities in its own account with a fully registered broker-dealer. Such activities generally would not independently trigger the need to fully register as a broker-dealer unless they constituted activities of a ''dealer'' as that term is defined in the federal securities laws.

[119] Exchange Act Rules 3a43–1 and 3a44–1 provide some relief from broker-dealer registration related to a future commission merchant's ancillary government securities activities. *See* 17 CFR 240.3a43–1; 240.3a44–1. However, such rules are inapposite to notice-registered broker-dealers wishing to engage in equity securities activities in addition to activities in security futures products. *See supra* note 115.

By the Commission.

Dated: June 21, 2002.

Margaret H. McFarland,

Deputy Secretary.

[FR Doc. 02–16211 Filed 6–26–02; 8:45 am]

BILLING CODE 8010–01–P

DEPARTMENT OF THE TREASURY

Customs Service

19 CFR PART 12

[T.D. 02—30]

RIN 1515–AD12

Extension of Import Restrictions Imposed on Archaeological and Ethnological Materials From Peru; Correction

AGENCY: Customs Service, Treasury.

ACTION: Final rule; correction.

SUMMARY: This document contains corrections to the final rule (T.D. 02–30) that was published in the **Federal Register** on June 6, 2002. The final rule extended for a period of five years from June 9, 2002, the import restrictions that were already in place for certain archaeological and ethnological materials from Peru. This document corrects the Internet web site address for accessing the Designated List of Archaeological and Ethnological Materials from Peru to which the import restrictions apply and an accompanying image database. The document also clarifies that the beginning date of the five year extension is June 9, 2002.

EFFECTIVE DATE: June 9, 2002.

FOR FURTHER INFORMATION CONTACT: (Regulatory Aspects) Joseph Howard, Intellectual Property Rights Branch (202) 927–2336; (Operational Aspects) Al Morawski, Trade Operations (202) 927–0402.

SUPPLEMENTARY INFORMATION:

Background

A final rule document, published as T.D. 02–30 in the **Federal Register** (67 FR 38877) on Thursday June 6, 2002, extended for a period of five years from June 9, 2002, the import restrictions that were already in place for certain archaeological and ethnological materials from Peru. The final rule amended section 12.104g(a), Customs Regulations (19 CFR 12.104g(a)).

This document corrects an error in the Background section of the document regarding the Internet web site address that was set forth to enable the public to access the Designated List of Archaeological and Ethnological Materials from Peru, which describes the materials covered by the import restrictions, and an accompanying image database. The document also clarifies that the beginning date of the five year extension is June 9, 2002, by changing the effective date of the regulation to June 9, 2002.

Corrections

In rule FR Doc. 02–14219, published on June 6, 2002 (67 FR 38877), make the following corrections:

1. On page 38877, in the first column, the **EFFECTIVE DATE** section should read as follows:

EFFECTIVE DATE: June 9, 2002.

2. On page 38877, in the third column, the first full sentence should read as follows:

The list and accompanying image database may also be found at the following Internet web site address: *http://exchanges.state.gov/culprop.*

Dated: June 24, 2002.

Sandra L. Bell,

Acting Assistant Commissioner, Office of Regulations and Rulings.

[FR Doc. 02–16235 Filed 6–26–02; 8:45 am]

BILLING CODE 4820–02–P

DEPARTMENT OF HEALTH AND HUMAN SERVICES

Food and Drug Administration

21 CFR Parts 510 and 520

New Animal Drugs; Change of Sponsor

AGENCY: Food and Drug Administration, HHS.

ACTION: Final rule.

SUMMARY: The Food and Drug Administration (FDA) is amending the animal drug regulations to reflect a change of sponsor for two approved new animal drug applications (NADAs) and an approved abbreviated new animal drug application (ANADA) from Lambert-Kay, A Division of Carter-Wallace, Inc., to Church & Dwight Co., Inc. The drug labeler code for Church & Dwight Co., Inc., is also being listed.

DATES: This rule is effective June 27, 2002.

FOR FURTHER INFORMATION CONTACT: Lonnie W. Luther, Center for Veterinary Medicine (HFV–101), Food and Drug Administration, 7500 Standish Pl., Rockville, MD 20855, 301–827–0209, e-mail: lluther@cvm.fda.gov.

SUPPLEMENTARY INFORMATION: Lambert-Kay, A Division of Carter-Wallace, Inc., P.O. Box 1001, Half Acre Rd., Cranbury, NJ 08512–0181, has informed FDA that it has transferred ownership of, and all rights and interest in, NADA 101–497 for TINY TIGER (dichlorophene/toluene) Worming Capsules, NADA 101–498 for LK (dichlorophene/toluene) Worming Capsules, and ANADA 200–028 for EVICT (pyrantel pamoate) Liquid Wormer to Church & Dwight Co., Inc., 469 North Harrison St., Princeton, NJ 08543–5297. Accordingly, the agency is amending the regulations in §§ 520.580 and 520.2043 (21 CFR 520.580 and 520.2043) to reflect the transfer of ownership.

Church & Dwight Co., Inc., has not been previously listed in the animal drug regulations as a sponsor of an approved application. Following these changes of sponsorship, Lambert-Kay is no longer the sponsor of any approved applications. Accordingly, 21 CFR 510.600(c)(1) and (c)(2) is being amended to add entries for Church & Dwight Co., Inc., and to remove the entries for Lambert-Kay. Also, § 520.2043 is being revised to reflect a current format.

This rule does not meet the definition of ''rule'' in 5 U.S.C. 804(3)(A) because it is a rule of ''particular applicability.'' Therefore, it is not subject to the congressional review requirements in 5 U.S.C. 801–808.

List of Subjects

21 CFR Part 510

Administrative practice and procedure, Animal drugs, Labeling, Reporting and recordkeeping requirements.

21 CFR Part 520

Animal drugs.

Therefore, under the Federal Food, Drug, and Cosmetic Act and under authority delegated to the Commissioner of Food and Drugs and redelegated to the Center for Veterinary Medicine, 21 CFR parts 510 and 520 are amended as follows:

PART 510—NEW ANIMAL DRUGS

1. The authority citation for 21 CFR part 510 continues to read as follows:

Authority: 21 U.S.C. 321, 331, 351, 352, 353, 360b, 371, 379e.

2. Section 510.600 is amended in the table in paragraph (c)(1) by removing the entry for ''Lambert-Kay, A Division of Carter-Wallace, Inc.'' and by alphabetically adding an entry for ''Church & Dwight Co., Inc.'' and in the table in paragraph (c)(2) by removing the entry ''011615'' and by numerically adding an entry for ''010237'' to read as follows:

§ 510.600 Names, addresses, and drug labeler codes of sponsors of approved applications.

* * * * *

(c) * * *

(1) * * *

Firm name and address	Drug labeler code
* * * * * * *	
Church & Dwight Co., Inc., 469 North Harrison St., Princeton, NJ 08543–5297	010237
* * * * * * *	

(2) * * *

Drug labeler code	Firm name and address
* * * * * * *	
010237	Church & Dwight Co., Inc., 469 North Harrison St., Princeton, NJ 08543–5297
* * * * * * *	

PART 520—ORAL DOSAGE FORM NEW ANIMAL DRUGS

3. The authority citation for 21 CFR part 520 continues to read as follows:

Authority: 21 U.S.C. 360b.

§ 520.580 [Amended]

4. Section 520.580 *Dichlorophene and toluene capsules* is amended by removing footnote 1 every place it appears in the section and in paragraph (b)(1) by removing ''011615'' and by adding in its place ''010237''.

5. Section 520.2043 is revised to read as follows:

§ 520.2043 Pyrantel pamoate suspension.

(a) *Specifications*. (1) Each milliliter (mL) contains pyrantel pamoate equivalent to 50 milligrams (mg) pyrantel base.

(2) Each mL contains pyrantel pamoate equivalent to 2.27 or 4.54 mg pyrantel base.

(3) Each mL contains pyrantel pamoate equivalent to 4.54 mg pyrantel base.

(b) *Sponsors*. See sponsors in § 510.600(c) of this chapter for uses as in paragraph (d) of this section.

(1) Nos. 000069 and 059130 for use of the product described in paragraph (a)(1) as in paragraph (d)(1) of this section.

(2) Nos. 000069, 010237, and 059130 for use of the products described in paragraph (a)(2) as in paragraph (d)(2) of this section.

(3) No. 023851 for use of the product described in paragraph (a)(3) as in paragraph (d)(2) of this section.

(c) *Special considerations*. See § 500.25 of this chapter.

(d) *Conditions of use*—(1) *Horses and ponies*. It is used as follows:

(i) *Amount*. 3 mg per pound (/lb) body weight as a single dose mixed with the usual grain ration, or by stomach tube or dose syringe.

(ii) *Indications for use*. For the removal and control of infections from the following mature parasites: Large strongyles (*Strongylus vulgaris*, *S. edentatus*, *S. equinus*), small strongyles, pinworms (*Oxyuris*), and large roundworms (*Parascaris*).

(iii) *Limitations*. Not for use in horses and ponies to be slaughtered for food purposes. When the drug is for administration by stomach tube, it shall be labeled: ''Federal law restricts this drug to use by or on the order of a licensed veterinarian.''

(2) *Dogs*. It is used as follows:

(i) *Dogs and puppies*—(A) *Amount*. 2.27 mg/lb body weight as a single dose in the animal's feed bowl by itself or mixed in a small quantity of food.

(B) *Indications for use*. For the removal of large roundworms (*Toxocara canis* and *Toxascarias leonina*) and hookworms (*Ancylostoma caninum* and *Uncinaria stenocephala*).

(C) *Limitations*. Additional treatment may be required and should be confirmed by fecal examination within 2 to 4 weeks.

(ii) *Dogs, puppies, and lactating bitches after whelping*—(A) *Amount*. 2.27 mg/lb body weight.

(B) *Indications for use*. To prevent reinfections of *T. canis*.

(C) *Limitations*. Administer to puppies at 2, 3, 4, 6, 8, and 10 weeks of age. Administer to lactating bitches 2 to 3 weeks after whelping. Adult dogs kept in heavily contaminated quarters may be treated at monthly intervals.

Dated: May 24, 2002.

Andrew J. Beaulieu,

Acting Director, Office of New Animal Drug Evaluation, Center for Veterinary Medicine.

[FR Doc. 02–16050 Filed 6–26–02; 8:45 am]

BILLING CODE 4160–01–S

DEPARTMENT OF HEALTH AND HUMAN SERVICES

Food and Drug Administration

21 CFR Part 558

New Animal Drugs for Use in Animal Feeds; Chlortetracycline

AGENCY: Food and Drug Administration, HHS.

ACTION: Final rule.

SUMMARY: The Food and Drug Administration (FDA) is amending the animal drug regulations to reflect approval of a supplemental new animal drug application (NADA) filed by Alpharma, Inc. The supplemental NADA provides for the administration of Type C medicated feeds containing chlortetracycline to cattle as a top dress on feed for the treatment of enteritis and pneumonia.

DATES: This rule is effective June 27, 2002.

FOR FURTHER INFORMATION CONTACT: Janis R. Messenheimer, Center for Veterinary Medicine (HFV–135), Food and Drug Administration, 7500 Standish Pl., Rockville, MD 20855, 301–827–7578, e-mail: jmessenh@cvm.fda.gov.

SUPPLEMENTARY INFORMATION: Alpharma, Inc., One Executive Dr., P.O. Box 1399, Fort Lee, NJ 07024, filed a supplement to NADA 48–761 for AUREOMYCIN 50, 90, or 100 (chlortetracycline) Type A medicated articles. The supplemental NADA provides for the administration of Type C medicated feeds containing chlortetracycline to calves, beef and nonlactating dairy cattle as a top dress on feed to deliver 10 milligrams (mg) chlortetracycline per pound of body weight daily. These medicated feeds are used for the treatment of bacterial enteritis caused by *Escherichia coli* and

bacterial pneumonia caused by *Pasteurella multocida* susceptible to chlortetracycline. The supplemental NADA is approved as of January 24, 2002, and the regulations are amended in 21 CFR 558.128 to reflect the approval. The basis of approval is discussed in the freedom of information summary.

Section 558.128 is also being amended to relocate a recently assigned withdrawal time (64 FR 23539, May 3, 1999) to the ''Limitations'' column of the table describing conditions of use. This is being done to improve the readability of the regulations.

In accordance with the freedom of information provisions of 21 CFR part 20 and 514.11(e)(2)(ii), a summary of safety and effectiveness data and information submitted to support approval of this supplemental application may be seen in the Dockets Management Branch (HFA–305), Food and Drug Administration, 5630 Fishers Lane, rm. 1061, Rockville, MD 20852, between 9 a.m. and 4 p.m., Monday through Friday.

Under section 512(c)(2)(F)(iii) of the Federal Food, Drug, and Cosmetic Act (21 U.S.C. 360b(c)(2)(F)(iii)), this approval for food-producing animals qualifies for 3 years of marketing exclusivity beginning January 24, 2002, because the application contains substantial evidence of the effectiveness of the drug involved, any studies of animal safety or, in the case of food-producing animals, human food safety studies (other than bioequivalence or residue studies) required for the approval and conducted or sponsored by the applicant.

The agency has determined under 21 CFR 25.33(a)(1) that this action is of a type that does not individually or cumulatively have a significant effect on the human environment. Therefore, neither an environmental assessment nor an environmental impact statement is required.

This rule does not meet the definition of ''rule'' in 5 U.S.C. 804(3)(A) because it is a rule of ''particular applicability.'' Therefore, it is not subject to the congressional review requirements in 5 U.S.C. 801–808.

List of Subjects in 21 CFR Part 558

Animal drugs, Animal feeds.

Therefore, under the Federal Food, Drug, and Cosmetic Act and under authority delegated to the Commissioner of Food and Drugs and redelegated to the Center for Veterinary Medicine, 21 CFR part 558 is amended as follows:

PART 558—NEW ANIMAL DRUGS FOR USE IN ANIMAL FEEDS

1. The authority citation for 21 CFR part 558 continues to read as follows:

Authority: 21 U.S.C. 360b, 371.

2. Section 558.128 is amended by redesignating paragraphs (a), (b), and (d) as paragraphs (b), (c), and (e), respectively; by adding new paragraphs (a) and (d); and by revising newly redesignated paragraphs (b) and (e) to read as follows:

§ 558.128 Chlortetracycline.

(a) *Specifications*. Type A medicated articles containing either chlortetracycline calcium complex equivalent to chlortetracycline hydrochloride or, for products intended for use in milk replacer, chlortetracycline hydrochloride.

(b) *Approvals*. See sponsors in § 510.600(c) of this chapter for use as in paragraph (e) of this section.

(1) Nos. 046573, 053389, and 066104: 50 to 100 grams per pound (g/lb) of Type A medicated article.

(2) No. 017519: 50 g/lb of Type A medicated article.

* * * * *

(d) *Special considerations*. (1) In milk replacers or starter feed; include on labeling the warning: ''A withdrawal period has not been established for this product in preruminating calves. Do not use in calves to be processed for veal.''

(2) Manufacture for use in free-choice feeds as in paragraph (e)(4)(iii) of this section must conform to § 510.455 of this chapter.

(3) When manufactured for use as in paragraph (e)(5)(iv) of this section, include on labeling the warning: ''Psittacosis, avian chlamydiosis, or ornithosis is a reportable communicable disease, transmissible between wild and domestic birds, other animals, and man. Contact appropriate public health and regulatory officials.''

(e) Conditions of use—(1) *Chickens*. It is used as follows:

Chlortetracycline amount	Indications for use	Limitations	Sponsor
(i) 10 to 50 g/ton	Chickens: For increased rate of weight gain and improved feed efficiency.	. . . . . . Do not feed to chickens producing eggs for human consumption.	046573. 017519, 046573, 053389, 066104.
(ii) 100 to 200 g/ton	Chickens: For control of infectious synovitis caused by *Mycoplasma synoviae* susceptible to chlortetracycline.	1. Feed continuously for 7 to 14 d. 2. Feed continuously for 7 to 14 d; do not feed to chickens producing eggs for human consumption.	046573. 017519, 046573, 053389, 066104.
(iii) 200 to 400 g/ton	Chickens: For the control of chronic respiratory disease (CRD) and air sac infection caused by *M. gallisepticum* and *Escherichia coli* susceptible to chlortetracycline.	1. Feed continuously for 7 to 14 d. 2. Feed continuously for 7 to 14 d; do not feed to chickens producing eggs for human consumption.	046573. 017519, 046573, 053389, 066104.
(iv) 500 g/ton	Chickens: For the reduction of mortality due to *E. coli* infections susceptible to chlortetracycline.	1. Feed for 5 d. 2. Feed for 5 d; do not feed to chickens producing eggs for human consumption.	046573. 017519, 046573, 053389, 066104.

(2) *Turkeys*. It is used as follows:

Chlortetracycline amount	Indications for use	Limitations	Sponsor
(i) 10 to 50 g/ton	Growing turkeys: For increased rate of weight gain and improved feed efficiency.	Do not feed to turkeys producing eggs for human consumption.	017519, 046573, 053389, 066104.
(ii) 200 g/ton	Turkeys: For control of infectious synovitis caused by *M. synoviae* susceptible to chlortetracycline.	Feed continuously for 7 to 14 d; do not feed to turkeys producing eggs for human consumption.	017519, 046573, 053389, 066104.
(iii) 400 g/ton	1. Turkeys: For control of hexamitiasis caused by *Hexamita meleagrides* susceptible to chlortetracycline.	Feed continuously for 7 to 14 d; do not feed to turkeys producing eggs for human consumption.	017519, 046573, 053389, 066104.
	2. Turkey poults not over 4 weeks of age: For reduction of mortality due to paratyphoid caused by *Salmonella typhimurium* susceptible to chlortetracycline.		017519, 046573, 053389, 066104.
(iv) 25 mg/lb of body weight	Turkeys: For control of complicating bacterial organisms associated with bluecomb (transmissible enteritis; coronaviral enteritis) susceptible to chlortetracycline.	Feed continuously for 7 to 14 d; do not feed to turkeys producing eggs for human consumption.	017519, 046573, 053389, 066104.

(3) *Swine*. It is used as follows:

Chlortetracycline amount	Indications for use	Limitations	Sponsor
(i) 10 to 50 g/ton	Growing swine: For increased rate of weight gain and improved feed efficiency.		017519, 046573, 053389, 066104.
(ii) 50 to 100 g/ton	Swine: For reducing the incidence of cervical lymphadenitis (jowl abscesses) caused by Group *E. Streptococci* susceptible to chlortetracycline.		017519, 046573, 053389, 066104.
(iii) 400 g/ton	Breeding swine: For the control of leptospirosis (reducing the incidence of abortion and shedding of leptospirae) caused by *Leptospira pomona* susceptible to chlortetracycline.	Feed continuously for not more than 14 d.	017519, 046573, 053389, 066104.
(iv) 10 mg/lb of body weight	1. Swine: For the treatment of bacterial enteritis caused by *E. coli* and *S. choleraesuis* and bacterial pneumonia caused by *Pasteurella multocida* susceptible to chlortetracycline.	Feed approximately 400 g/t, varying with body weight and feed consumption to provide 10 mg/lb per day. Feed for not more than 14 d; withdraw 5 d prior to slaughter for sponsor 017519.	017519, 046573, 053389, 066104.
	2. Swine: For the control of porcine proliferative enteropathies (ileitis) caused by *Lawsonia intracellularis* susceptible to chlortetracycline.	Feed for not more than 14 d.	046573.

(4) *Cattle*. It is used as follows:

Chlortetracycline amount	Indications for use	Limitations	Sponsor
(i) 0.1 mg/lb of body weight daily.	Calves (up to 250 lb): For increased rate of weight gain and improved feed efficiency.	See paragraph (d)(1) of this section.	017519, 046573, 053389, 066104.
(ii) 0.5 mg/lb of body weight daily.	Beef cattle (over 700 lb); control of active infection of anaplasmosis caused by *Anaplasma marginale* susceptible to chlortetracycline.	Withdraw 48 h prior to slaughter. To sponsor No. 046573: zero withdrawal time. To sponsor No. 053389: 1 d withdrawal time.	017519, 046573, 053389, 066104.

Chlortetracycline amount	Indications for use	Limitations	Sponsor
(iii) 0.5 to 2.0 mg/lb of body weight daily.	Beef cattle and nonlactating dairy cattle: As an aid in the control of active infection of anaplsmosis caused by *A. marginale* susceptible to chlortetracycline.	In free-choice cattle feeds such as feed blocks or salt-mineral mixes manufactured from approved Type A articles. See paragraph (d)(2) of this section.	046573.
(iv) 10 mg/lb of body weight daily.	1. Calves, beef and nonlactating dairy cattle; treatment of bacterial enteritis caused by *E. coli* and bacterial pneumonia caused by *P. multocida* organisms susceptible to chlortetracycline.	Feed approximately 400 g/ton, varying with body weight and feed consumption to provide 10 mg/lb per day. Treat for not more than 5 d; in feed including milk replacers; withdraw 10 d prior to slaughter. To sponsor No. 053389: 1 d withdrawal time. To sponsor No. 046573: zero withdrawal time. See paragraph (d)(1) of this section.	017519, 046573, 053389, 066104.
	2. Calves (up to 250 lb): For the treatment of bacterial enteritis caused by *E. coli* susceptible to chlortetracycline.	See paragraph (d)(1) of this section.	017519, 046573, 053389, 066104.
(v) 4,000 to 20,000 g/ton	Calves, beef and nonlactating dairy cattle; treatment of bacterial enteritis caused by *E. coli* and bacterial pneumonia caused by *P. multocida* organisms susceptible to chlortetracycline.	As a top dress, varying with body weight and feed consumption, to provide 10 mg/lb per day. Treat for not more than 5 days. See paragraph (d)(1) of this section.	046573.
(vi) 25 to 70 mg/head/day	Calves (250 to 400 lb): For increased rate of weight gain and improved feed efficiency.	See paragraph (d)(1) of this section.	017519, 046573, 053389, 066104.
(vii) 70 mg/head/day	Growing cattle (over 400 lb): For increased rate of weight gain, improved feed efficiency, and reduction of liver condemnation due to liver abscesses.	See paragraph (d)(1) of this section.	017519, 046573, 053389, 066104.
(viii) 350 mg/head/day	1. Beef cattle: For control of bacterial pneumonia associated with shipping fever complex caused by *Pasteurella*spp. susceptible to chlortetracycline.	Withdraw 48 h prior to slaughter. For sponsor 046573: zero withdrawal time. For sponsor 053389: 1 d withdrawal time.	017519, 046573, 053389, 066104.
	2. Beef cattle (under 700 lb): For control of active infection of anaplasmosis caused by *A. marginale* susceptible to chlortetracycline.	Withdraw 48 h prior to slaughter. For sponsor 046573: zero withdrawal time. For sponsor 053389: 1 d withdrawal time.	017519, 046573, 053389, 066104.

(5) *Minor species*. It is used as follows:

Chlortetracycline amount	Indications for use	Limitations	Sponsor
(i) 20 to 50 g/ton	Growing sheep; increased rate of weight gain and improved feed efficiency.		046573, 053389, 066104.
(ii) 80 mg/head/day	Breeding sheep; reducing the incidence of (vibrionic) abortion caused by *Campylobacter fetus* infection susceptible to chlortetracycline.		046573, 053389, 066104.
(iii) 200 to 400 g/ton	Ducks: For the control and treatment of fowl cholera caused by *P. multocida* susceptible to chlortetracycline.	Feed in complete ration to provide from 8 to 28 mg/lb of body weight per day depending upon age and severity of disease, for not more than 21 d. Do not feed to ducks producing eggs for human consumption.	046573.

Chlortetracycline amount	Indications for use	Limitations	Sponsor
(iv) 10 mg/g of finished feed daily.	Psittacine birds (cockatoos, macaws, and parrots) suspected or known to be infected with psittacosis caused by *Chlamydia psittaci* sensitive to chlortetracycline.	Feed continuously for 45 d; each bird should consume daily an amount of medicated feed equal to one fifth of its body weight. See paragraph (d)(3) of this section.	046573.

(6) *Chlortetracycline*. It may be used in accordance with this section in combinations as follows:

(i) Amprolium in accordance with § 558.55.

(ii) Amprolium plus ethopabate in accordance with § 558.58.

(iii) Bacitracin methylene disalicylate in accordance with § 558.76.

(iv) Clopidol in accordance with § 558.175.

(v) Decoquinate in accordance with § 558.195.

(vi) Hygromycin B in accordance with § 558.274.

(vii) Monensin in accordance with § 558.355.

(viii) Robenidine hydrochloride in accordance with § 558.515.

(ix) Roxarsone in accordance with § 558.530.

(x) Salinomycin alone or with roxarsone in accordance with § 558.550.

(xi) Tiamulin in accordance with § 558.600.

(xii) Zoalene in accordance with § 558.680.

Dated: May 29, 2002.

Andrew J. Beaulieu,

Acting Director, Office of New Animal Drug Evaluation, Center for Veterinary Medicine.

[FR Doc. 02–16161 Filed 6–26–02; 8:45 am]

BILLING CODE 4160–01–S

DEPARTMENT OF TRANSPORTATION

Coast Guard

33 CFR Part 3

[USCG–2002–12471]

RIN 2115–AG44

Navigation and Navigable Waters—Technical Amendments, Organizational Changes, Miscellaneous Editorial Changes and Conforming Amendments; Delay of Effective Date for Certain Amendments Relating to the Marine Inspection Zones and Captain of the Port Zones for Hampton Roads and Wilmington (NC)

AGENCY: Coast Guard, DOT.

ACTION: Final rule; delay of effective date for certain amendments.

SUMMARY: We are revising the effective date of two sections of a technical amendments rule published June 18, 2002, that will become effective June 28, 2002. That rule makes technical and organizational amendments to Coast Guard navigation and navigable waters regulations. The two sections of the rule that revise the boundaries between Hampton Roads Marine Inspection/Captain of the Port Zone and the Wilmington Marine Inspection/Captain of the Port Zone, will not become effective until October 1, 2002. This rule changes the effective date for just those two sections.

DATES: The effective date for the revisions to 33 CFR 3.25–10(b) and 3.25–20(b), published at 67 FR 41331, June 18, 2002, is delayed from June 28, 2002, until October 1, 2002.

FOR FURTHER INFORMATION CONTACT: If you have questions on this rule, call Robert Spears, Project Manager, Standards Evaluation and Development Division, (G–MSR–2), Coast Guard, at 202–267–1099. If you have questions on viewing, or submitting material to the docket, call Dorothy Beard, Chief, Dockets, Department of Transportation, at 202–366–5149.

SUPPLEMENTARY INFORMATION: On June 18, 2002, in Volume 67 of **Federal Register** Number 117, pages 41329–41334, the Coast Guard published a final rule entitled ''Navigation and Navigable Waters—Technical Amendments, Organizational Changes, Miscellaneous Editorial Changes and Conforming Amendments.'' The final rule made editorial and technical changes throughout title 33 of the Code of Federal Regulations (CFR) to update the title before recodification on July 1, 2002. The final rule updated organization names and addresses, and made conforming amendments and technical corrections.

Two revisions changed the boundaries between the Hampton Roads Marine Inspection/Captain of the Port Zone (33 CFR 3.25–10(b)) and the Wilmington Marine Inspection/Captain of the Port Zone (33 CFR 3.25–20(b)) (67 FR 41331). We anticipate that Coast Guard Marine Safety Office Wilmington will have a fully staffed, operation-ready detachment in place to serve the public in this new area of responsibility by September 2002. Therefore, we are making the revisions to 33 CFR 3.25–10(b) and 33 CFR 3.25–20(b) effective October 1, 2002.

Dated: June 21, 2002.

Joseph J. Angelo,

Director of Standards, Marine Safety, Security and Environmental Protection.

[FR Doc. 02–16237 Filed 6–26–02; 8:45 am]

BILLING CODE 4910–15–P

DEPARTMENT OF TRANSPORTATION

Coast Guard

33 CFR Part 117

[CGD07–02–070]

Drawbridge Operation Regulations; Atlantic Intracoastal Waterway, Mile 1074.0 at Hallandale Beach, Broward County, FL

AGENCY: Coast Guard, DOT.

ACTION: Notice of temporary deviation from regulations.

SUMMARY: The Commander, Seventh Coast Guard District, has approved a temporary deviation from the regulations governing the operation of the New Hallandale Beach Boulevard bridge, mile 1074.0 at Hallandale Beach, Florida. This deviation allows this bridge to only open a single-leaf from July 1, 2002, to August 29, 2002. This action is necessary to facilitate workers' safety during construction of the new bridge.

DATES: This deviation is effective from 12:01 a.m. on July 1, 2002, until 11 p.m. on August 29, 2002.

ADDRESSES: Material received from the public, as well as documents indicated in this preamble as being available in the docket, will become part of this docket and will be available for inspection or copying at Commander (obr), Seventh Coast Guard District, 909 SE. 1st Avenue, Room 432, Miami, FL 33131 between 7:30 a.m. and 4 p.m., Monday through Friday, except Federal holidays.

FOR FURTHER INFORMATION CONTACT: Mr. Michael Lieberum, Project Officer,

Seventh Coast Guard District, Bridge Section at (305) 415–6744.

SUPPLEMENTARY INFORMATION: The Hallandale Beach Boulevard (SR 824) bridge, mile 1074.0 at Hallandale Beach, Broward County, Florida will continue to operate on schedule. The existing operating regulations in 33 CFR 117.261 (kk) require the bridge to open on signal; except that, from 7:15 a.m. to 6:15 p.m., the draw need open only on the quarter hour and three-quarter hour. The new Hallandale Beach Boulevard bridge, mile 1074.0 at Hallandale Beach, Broward County, Florida will be erected in the down position. When the first leaf is installed it will provide a horizontal clearance of 60 feet between the down span and the fender system.

The contractors notified the Coast Guard on May 28, 2002, that the work on the new bascule leaves would start on July 1, 2002, and due to a safety issue involving welding deck plates, and pouring concrete, they requested that the new bascule bridge be able to only open a single-leaf of the bridge from July 1, 2002 until August 29, 2002. This action will not significantly hinder navigation, as a horizontal clearance of 60 feet will be available during the construction.

The District Commander has granted a temporary deviation from the operating requirements listed in 33 CFR 117.5 to construct the new drawbridge. Under this deviation, the New Hallandale Beach Boulevard bridge, mile 1074.0 at Hallandale Beach, need only open a single-leaf from 12:01 a.m. on July 1, 2002, until 10 p.m. on August 29, 2002.

Dated: June 18, 2002.

Greg Shapley,

Chief, Bridge Administration Branch, Seventh Coast Guard District.

[FR Doc. 02–16238 Filed 6–26–02; 8:45 am]

BILLING CODE 4910–15–P

NATIONAL ARCHIVES AND RECORDS ADMINISTRATION

36 CFR Parts 1228, 1250, and 1254

RIN 3095–AB15

NARA Regulations; Technical Amendments

AGENCY: National Archives and Records Administration (NARA).

ACTION: Final rule.

SUMMARY: NARA is correcting references to NARA Web sites in its regulations. References to NARA Web sites are currently in our records management regulations and in our public availability and use of records regulations. This final rule will affect Federal agencies and the public.

EFFECTIVE DATE: June 27, 2002.

FOR FURTHER INFORMATION CONTACT: Kim Richardson at telephone number 301–837–2902, or fax number 301–837–0319.

SUPPLEMENTARY INFORMATION: NARA has redesigned its public Web site and its Web site address is changed from *www.nara.gov* to *www.archives.gov.* Parts 1228, 1250, and 1254 contain references to the NARA Web site. These references need to be corrected to reflect the new Web site address. This final rule contains technical amendments such as references to NARA Web sites.

This rule is effective upon publication for ''good'' cause as permitted by the Administrative Procedure Act (5 U.S.C. 553(d)(3)). NARA believes that delaying the effective date for 30 days is unnecessary as this rule represents minor technical amendments. Moreover, as the public benefits immediately being provided with accurate Web site addresses for NARA's public Web site, any delay in the effective date would be contrary to the public interest.

This final rule is not a significant regulatory action for the purposes of Executive Order 12866 and has not been reviewed by the Office of Management and Budget. As required by the Regulatory Flexibility Act, I certify that this final rule will not have a significant impact on a substantial number of small entities. This regulation does not have any federalism implications.

List of Subjects

36 CFR Part 1228

Archives and records.

36 CFR Part 1250

Confidential business information, Freedom of information.

36 CFR Part 1254

Archives and records, Confidential business information, Freedom of information, Micrographics.

For the reasons set forth in the preamble, NARA amends parts 1228, 1250, and 1254 of title 36, Code of Federal Regulations, as follows:

PART 1228—DISPOSITION OF FEDERAL RECORDS

1. The authority citation for Part 1228 continues to read as follows:

Authority: 44 U.S.C. chs. 21, 29, and 33.

§ 1228.12 [Amended]

2. In the introductory paragraph of § 1228.12, remove the Web site address ''*http://www.nara.gov/records/pubs/*'' and add in its place the Web site address ''*http://www.archives.gov/records_management/publications/disposition_of_federal_records/index.html.*''

§ 1228.22 [Amended]

3. In the introductory paragraph of § 1228.22, remove the Web site address ''*http://www.nara.gov/records/pubs/*'' and add in its place the Web site address ''*http://www.archives.gov/records_management/publications/disposition_of_federal_records/index.html.*''

§ 1228.150 [Amended]

4. In paragraph (a) of § 1228.150 remove the Web site address ''*http://www.nara.gov*'' and add in its place the Web site address ''http://www.archives.gov/facilities/index.html.''

§ 1228.160 [Amended]

5. In paragraph (f) of § 1228.160 remove the Web site address ''*http://www.nara.gov*'' and add in its place the Web site address ''*http://www.archives.gov.*''

§ 1228.166 [Amended]

6. In paragraph (b) of § 1228.166 remove the Web site address ''*http://www.nara.gov/regional/cpr.html*'' and add in its place the Web site address ''*http://www.archives.gov/facilities/mo/st_louis.html.*''

PART 1250—PUBLIC AVAILABILITY AND USE OF FEDERAL RECORDS

1. The authority citation for Part 1250 continues to read as follows:

Authority: 44 U.S.C. 2104(a), 2204; 5 U.S.C. 552; E.O. 12600, 52 FR 23781, 3 CFR, 1987 Comp., p. 235.

§ 1250.12 [Amended]

2. In paragraph (c) of § 1250.12 remove the Web site address ''*http://www.nara.gov/foia*'' and add in its place the Web site address ''*http://www.archives.gov/research_room/foia_reading_room/foia_reading_room.html.*''

§ 1250.24 [Amended]

3. In § 1250.24 remove the Web site address ''*inquire@nara.gov*'' and add in its place the Web site address ''*http://www.archives.gov/global_pages/inquire_form.html.*''

§ 1250.76 [Amended]

4. In § 1250.76 remove the Web site address ''*inquire@nara.gov*'' and add in its place the Web site address ''*http://*

www.archives.gov/global_pages/inquire_form.html.''

PART 1254—AVAILABILITY OF RECORDS AND DONATED HISTORICAL MATERIALS

1. The authority citation for Part 1254 continues to read as follows:

Authority: 44 U.S.C. 2101–2118; 5 U.S.C. 552; and E.O. 12600, 52 FR 23781, 3 CFR, 1987 Comp., p. 235.

2. In § 1254.2, revise paragraph (a) to read as follows:

§ 1254.2 Location of documents and hours of use.

(a) Researchers should identify the location of the documents needed. Information about the location of records may be obtained by writing to the National Archives and Records Administration (NWCC1), Washington, DC 20408; by sending an e-mail message to *http://www.archives.gov/global_pages/inquire_form.html;* sending a fax request to (301) 837–0483; or calling (202) 501–5400 or (301) 837–2000.

* * * * *

Dated: June 21, 2002.

John W. Carlin,

Archivist of the United States.

[FR Doc. 02–16165 Filed 6–26–02; 8:45 am]

BILLING CODE 7515–01–P

NATIONAL ARCHIVES AND RECORDS ADMINISTRATION

36 CFR Part 1253

RIN 3095–AB08

NARA Facilities; Addresses and Hours

AGENCY: National Archives and Records Administration (NARA).

ACTION: Final rule.

SUMMARY: The National Archives and Records Administration is amending its regulation that lists NARA facilities and hours when the public and other Federal agency staff may use the records in those facilities. This final rule includes corrections to email addresses for the Presidential libraries, corrections to phone and fax numbers, and in some cases, modifies the hours that these facilities are open for research. In addition, NARA is also implementing a uniform policy on research room facility closings for Federal holidays in order to standardize them throughout NARA. This final rule affects members of the public who do research at NARA facilities.

EFFECTIVE DATE: June 27, 2002.

FOR FURTHER INFORMATION CONTACT: Kim Richardson at telephone number 301–713–7360, ext. 240, or fax number 301–713–7270.

SUPPLEMENTARY INFORMATION: The proposed rule was published in the April 15, 2002, **Federal Register** (67 FR 18146) for a 60-day comment period. NARA did not receive any comments.

This rule is effective upon publication for ''good'' cause as permitted by the Administrative Procedure Act (5 U.S.C. 553(d)(3)). NARA believes that delaying the effective date for 30 days is unnecessary as this rule represents minor technical amendments. Moreover, as the public benefits immediately being provided with corrections to email addresses for the Presidential libraries, phone and fax numbers, and in some cases, modifications to the hours that these facilities are open for research, any delay in the effective date would be contrary to the public interest.

This rule is not a significant regulatory action for the purposes of Executive Order 12866 and has not been reviewed by the Office of Management and Budget. As required by the Regulatory Flexibility Act, I certify that this rule will not have a significant impact on a substantial number of small entities. This regulation does not have any federalism implications.

List of Subjects in 36 CFR Part 1253

Archives and records.

For the reasons set forth in the preamble, NARA amends part 1253 of title 36, Code of Federal Regulations, chapter XII, as follows:

PART 1253—LOCATION OF RECORDS AND HOURS OF USE

1. The authority citation for Part 1253 continues to read as follows:

Authority: 44 U.S.C. 2104(a).

2. Amend § 1253.3 by revising paragraphs (a) through (j) to read as follows:

§ 1253.3 Presidential Libraries.

* * * * *

(a) Herbert Hoover Library is located at 210 Parkside Dr., West Branch, IA (mailing address: PO Box 488, West Branch, IA 52358–0488). The phone number is 319–643–5301 and the fax number is 319–643–5825. The e-mail address is *hoover.library@nara.gov.*

(b) Franklin D. Roosevelt Library is located at 4079 Albany Post Rd., Hyde Park, NY 12538–1999. The phone number is 845–229–8114 and the fax number is 845–229–0872. The e-mail address is *roosevelt.library@nara.gov.*

(c) Harry S. Truman Library is located at 500 W. US Hwy 24, Independence, MO 64050–1798. The phone number is 816–833–1400 and the fax number is 816–833–4368. The e-mail address is *truman.library@nara.gov.*

(d) Dwight D. Eisenhower Library is located at 200 SE Fourth Street, Abilene, KS 67410–2900. The phone number is 785–263–4751 and the fax number is 785–263–4218. The e-mail address is *eisenhower.library@nara.gov.*

(e) John Fitzgerald Kennedy Library is located at Columbia Point, Boston, MA 02125–3398. The phone number is 617–929–4500 and the fax number is 617–929–4538. The e-mail address is *kennedy.library@nara.gov.*

(f) Lyndon Baines Johnson Library is located at 2313 Red River St., Austin, TX 78705–5702. The phone number is 512–916–5137 and the fax number is 512–916–5171. The e-mail address is *johnson.library@nara.gov.*

(g) Gerald R. Ford Museum is located at 303 Pearl St., Grand Rapids, MI 49504–5353. The phone number is 616–451–9263 and the fax number is 616–451–9570. The e-mail address is *ford.museum@nara.gov.* Gerald R. Ford Library is located at 1000 Beal Avenue, Ann Arbor, MI 48109–2114. The phone number is 734–741–2218 and the fax number is 734–741–2341. The e-mail address is *ford.library@nara.gov.*

(h) Jimmy Carter Library is located at 441 Freedom Parkway, Atlanta, GA 30307–1498. The phone number is 404–331–3942 and the fax number is 404–730–2215. The e-mail address is *carter.library@nara.gov.*

(i) Ronald Reagan Library is located at 40 Presidential Dr., Simi Valley, CA 93065–0699. The phone number is 800–410–8354 or 805–522–8444 and the fax number is 805–522–9621. The e-mail address is *reagan.library@nara.gov.*

(j) George Bush Library is located at 1000 George Bush Drive West, College Station, TX 77845. The phone number is 979–260–9554 and the fax number is 979–260–9557. The e-mail address is *bush.library@nara.gov.*

3. Revise § 1253.5 to read as follows:

§ 1253.5 National Personnel Records Center.

(a) *Military Personnel Records.* NARA—National Personnel Records Center—Military Personnel Records is located at 9700 Page Ave., St. Louis, MO 63132–5100. The hours are 7:30 a.m. to 3:45 p.m., Monday through Friday, except Federal holidays.

(b) *Civilian Personnel Records.* NARA—National Personnel Records Center—Civilian Personnel Records is located at 111 Winnebago St., St. Louis, MO 63118–4199. The hours are 7:30 a.m. to 3:45 p.m., Monday through Friday, except Federal holidays.

4. Amend § 1253.6 by revising paragraphs (a) through (f), and (h) through (l) to read as follows:

§ 1253.6 Records Centers.

* * * * *

(a) NARA—Northeast Region (Boston) is located at the Frederick C. Murphy Federal Center, 380 Trapelo Rd., Waltham, MA 02452–6399. The hours are 8 a.m. to 4:30 p.m., Monday through Friday. The telephone number is 781–647–8104.

(b) NARA—Northeast Region (Pittsfield, MA) is located at 10 Conte Drive, Pittsfield, MA 01201–8230. The hours are 8 a.m. to 4:30 p.m., Monday through Friday. The telephone number is 413–445–6885.

(c) NARA—Mid Atlantic Region (Northeast Philadelphia) is located at 14700 Townsend Rd., Philadelphia, PA 19154–1096. The hours are 8 a.m. to 4:30 p.m., Monday through Friday. The telephone number is 215–671–9027.

(d) NARA—Southeast Region (Atlanta) is located at 1557 St. Joseph Ave., East Point, GA 30344–2593. The hours are 7 a.m. to 4 p.m., Monday through Friday. The telephone number is 404–763–7474.

(e) NARA—Great Lakes Region (Dayton) is located at 3150 Springboro Rd., Dayton, OH 45439–1883. The hours are 7 a.m. to 4:30 p.m., Monday through Friday. The telephone number is 937–225–2852.

(f) NARA—Great Lakes Region (Chicago) is located at 7358 S. Pulaski Rd., Chicago, IL 60629–5898. The hours are 8 a.m. to 4:30 p.m., Monday through Friday. The telephone number is 773–581–7816.

* * * * *

(h) NARA—Central Plains Region (Lee's Summit, MO) is located at 200 Space Center Drive, Lee's Summit, MO 64064–1182. The hours are 8 a.m. to 4 p.m., Monday through Friday. The telephone number is 816–823–6272.

(i) NARA—Southwest Region (Fort Worth) is located at 501 West Felix St., Bldg. 1, Fort Worth, TX (mailing address: P.O. Box 6216, Fort Worth, TX 76115–0216). The hours are 8 a.m. to 2:00 p.m., Monday through Friday. The telephone number is 817–334–5515.

(j) NARA—Rocky Mountain Region (Denver) is located at Building 48, Denver Federal Center, West 6th Ave. and Kipling Street, Denver, CO (mailing address: PO Box 25307, Denver, CO 80225–0307). The hours are 7:30 a.m. to 4 p.m., Monday through Friday. The telephone number is 303–236–0804.

(k) NARA—Pacific Region (San Francisco) is located at 1000 Commodore Dr., San Bruno, CA 94066–2350. The hours are 7:30 a.m. to 4 p.m., Monday through Friday. The telephone number is 650–876–9001.

(l) NARA—Pacific Region (Laguna Niguel, CA) is located at 24000 Avila Rd., 1st Floor East Entrance, Laguna Niguel, CA (mailing address: PO Box 6719, Laguna Niguel, CA 92607–6719). The hours are 8 a.m. to 4:30 p.m., Monday through Friday. The telephone number is 949–360–2626.

* * * * *

5. Amend § 1253.7 by revising paragraphs (b), (d), (g), (h), and (i) to read as follows:

§ 1253.7 Regional Archives.

* * * * *

(b) NARA—Northeast Region (Pittsfield, MA) is located at 10 Conte Drive, Pittsfield, MA 01201–8230. The hours are 8 a.m. to 4:30 p.m., Monday through Friday. The telephone number is 413–445–6885.

* * * * *

(d) NARA—Mid Atlantic Region (Center City Philadelphia) is located at 900 Market St., Philadelphia, PA 19107–4292. The hours are 8 a.m. to 5 p.m., Monday through Friday. The telephone number is 215–597–3000.

* * * * *

(g) NARA—Central Plains Region (Kansas City) is located at 2312 E. Bannister Rd., Kansas City, MO 64131–3060. The hours are 7:30 a.m. to 4 p.m., Monday through Friday. The telephone number is 816–926–6920.

(h) NARA—Southwest Region (Fort Worth) is located at 501 West Felix St., Bldg. 1, Dock 1, Fort Worth, TX (mailing address: P.O. Box 6216, Fort Worth, TX, 76115–0216). The hours are 6:30 a.m. to 4 p.m., Monday through Friday. The telephone number is 817–334–5525.

(i) NARA—Rocky Mountain Region (Denver) Textual Research room is located at Building 48, Denver Federal Center, West 6th Ave. and Kipling Street, Denver, CO. The Microfilm Research room is located at Building 46, Denver Federal Center, West 6th Ave. and Kipling Street, Denver, CO. (The mailing address: PO Box 25307, Denver, CO 80225–0307). The hours are 7:30 a.m. to 3:45 p.m., Monday through Friday. The telephone number is 303–236–0817.

* * * * *

6. Add § 1253.8 to read as follows:

§ 1253.8 Are NARA research room facilities closed on Federal holidays?

(a) NARA research room facilities are closed on all Federal holidays.

(b) When a Federal holiday is on a Saturday but the official observance is on the preceding Friday, the research rooms that are normally open on Saturday will be closed on the Saturday as well as the Friday.

Dated: June 21, 2002.

John W. Carlin,

Archivist of the United States.

[FR Doc. 02–16166 Filed 6–26–02; 8:45 am]

BILLING CODE 7515–01–P

ENVIRONMENTAL PROTECTION AGENCY

40 CFR Part 180

[OPP–2002–0087; FRL–7185–1]

Cyhalofop-butyl; Pesticide Tolerance Technical Correction

AGENCY: Environmental Protection Agency (EPA).

ACTION: Technical correction.

SUMMARY: EPA issued a final rule in the **Federal Register** of June 4, 2002 establishing time-limited tolerances for cyhalofop-butyl in § 180.579. However, time-limited tolerances for cyhalofop-butyl were previously established under § 180.576. This document is being issued to amend 40 CFR 180.576 and to remove § 180.579.

DATES: This regulation is effective June 27, 2002. Objections and requests for hearings, identified by docket ID number OPP–2002–0087, must be received on or before August 26, 2002.

ADDRESSES: Comments may be submitted by mail, electronically, or in person. Please follow the detailed instructions for each method as provided in Unit II. of the **SUPPLEMENTARY INFORMATION**. To ensure proper receipt by EPA, it is imperative that you identify docket ID number OPP–2002–0087 in the subject line on the first page of your response.

FOR FURTHER INFORMATION CONTACT: By mail: Joanne I. Miller, Registration Division (7505C), Office of Pesticide Programs, Environmental Protection Agency, 1200 Pennsylvania Ave., NW.,Washington, DC 20460; telephone number: (703) 305–6224; e-mail address: miller.joanne@epa.gov

SUPPLEMENTARY INFORMATION:

I. General Information

A. Does this Action Apply to Me?

You may be affected by this action if you are an agricultural producer, food manufacturer, or pesticide manufacturer. Potentially affected categories and entities may include, but are not limited to:

Categories	NAICS codes	Examples of potentially affected entities
Industry	111 112 311 32532	Crop production Animal production Food manufacturing Pesticide manufacturing

This listing is not intended to be exhaustive, but rather provides a guide for readers regarding entities likely to be affected by this action. Other types of entities not listed in the table could also be affected. The North American Industrial Classification System (NAICS) codes have been provided to assist you and others in determining whether or not this action might apply to certain entities. If you have questions regarding the applicability of this action to a particular entity, consult the person listed under **FOR FURTHER INFORMATION CONTACT.**

B. How Can I Get Additional Information, Including Copies of this Document and Other Related Documents?

1. *Electronically.*You may obtain electronic copies of this document, and certain other related documents that might be available electronically, from the EPA Internet Home Page at http://www.epa.gov/. To access this document, on the Home Page select ''Laws and Regulations,'' ''Regulations and Proposed Rules,'' and then look up the entry for this document under the ''**Federal Register**—Environmental Documents.'' You can also go directly to the **Federal Register** listings at http://www.epa.gov/fedrgstr/. A frequently updated electronic version of 40 CFR part 180 is available at http://www.access.gpo.gov/nara /cfr/cfrhtml_00/Title_40/40cfr180_00.html, a beta site currently under development.

2. *In person.* The Agency has established an official record for this action under docket ID number OPP–2002–0087. The official record consists of the documents specifically referenced in this action, and other information related to this action, including any information claimed as Confidential Business Information (CBI). This official record includes the documents that are physically located in the docket, as well as the documents that are referenced in those documents. The public version of the official record does not include any information claimed as CBI. The public version of the official record, which includes printed, paper versions of any electronic comments submitted during an applicable comment period is available for inspection in the Public Information and Records Integrity Branch (PIRIB), Rm. 119, Crystal Mall #2, 1921 Jefferson Davis Hwy., Arlington, VA, from 8:30 a.m. to 4 p.m., Monday through Friday, excluding legal holidays. The PIRIB telephone number is (703) 305–5805.

III. What Does this Technical Correction Do?

Time-limited tolerances for cyhalofop-butyl on various commodities were published in the **Federal Register** on June 4, 2002 (67 FR 38407) (FRL–7178–5)] under 40 CFR 180.579. However, time-limited tolerances for cyhalofop-butyl were previously established under § 180.576. This document is being issued to update 40 CFR 180.576 and to remove § 180.579.

IV. Do Any of the Regulatory Assessment Requirements Apply to this Action?

This action corrects tolerances established under FFDCA section 408(e). The Office of Management and Budget (OMB) has exempted these types of actions from review under Executive Order 12866, entitled *Regulatory Planning and Review* (58 FR 51735, October 4, 1993). Because this technical correction has been exempted from review under Executive Order 12866 due to its lack of significance, this technical correction is not subject to Executive Order 13211, entitled *Actions Concerning Regulations That Significantly Affect Energy Supply, Distribution, or Use* (66 FR 28355, May 22, 2001). In addition, this technical correction does not contain any information collections subject to OMB approval under the Paperwork Reduction Act, 44 U.S.C. 3501 *et seq.*, or impose any enforceable duty or contain any unfunded mandate as described under Title II of the Unfunded Mandates Reform Act of 1995 (Public Law 104–4). Nor does it require any prior consultation as specified by Executive Order 12875, entitled *Enhancing the Intergovernmental Partnership* (58 FR 58093, October 28, 1993), or special considerations as required by Executive Order 12898, entitled *Federal Actions to Address Environmental Justice in Minority Populations and Low-Income Populations* (59 FR 7629, February 16, 1994), or require OMB review in accordance with Executive Order 13045, entitled *Protection of Children from Environmental Health Risks and Safety Risks* (62 FR 19885, April 23, 1997).

In addition, under the Regulatory Flexibility Act (5 U.S.C. 601 *et seq.*), the Agency previously assessed whether establishing tolerances, exemptions from tolerances, raising tolerance levels, or expanding exemptions might adversely impact small entities and concluded, as a generic matter, that there is no adverse economic impact. The factual basis for the Agency's generic certification for tolerance actions published on May 4, 1981 (46 FR 24950), and was provided to the Chief Counsel for Advocacy of the Small Business Administration.

List of Subjects in 40 CFR Part 180

Environmental protection, Administrative practice and procedure, Agricultural commodities, Pesticides and pests, Reporting and recordkeeping requirements.

Dated: June 20, 2002.

Debra Edwards,

Acting Director, Registration Division, Office of Pesticide Programs.

Therefore, 40 CFR part 180 is corrected as follows:

PART 180—[AMENDED]

1. The authority citation for part 180 continues to read as follows:

Authority: 21 U.S.C. 321(q), 346(a) and 374.

2. Section 180.576 is revised to read as follows:

§ 180.576 Cyhalofop-butyl; tolerances for residues.

(a) *General.* Time-limited tolerances are established for combined residues of cyhalofop (cyhalofop-butyl, R-(+)-n-butyl-2-(4(4-cyano-2-fluorophenoxy)-phenoxy)propionate, plus cyhalofop acid, R-(+)-2-(4(4-cyano-2-fluorophenoxy)-phenoxy)propionic acid) and the di-acid metabolite, (2R)-4-[4-(1-carboxyethoxy)phenoxy]-3-fluorobenzoic acid, from the application of the herbicide cyhalofop-butyl in or on the following raw agricultural commodities:

Commodity	Parts per million	Expiration/Revocation Date
Rice, grain	0.03	6/1/2007
Rice, straw	8.0	6/1/2007

(b) *Section 18 emergency exemptions.* [Reserved]

(c) *Tolerances with regional registrations.* [Reserved]

(d) *Indirect or inadvertent residues.* [Reserved]

§ 180.579 [Removed]

3. Section 180.579 is removed.

[FR Doc. 02–16279 Filed 6–26–02; 8:45 am]

BILLING CODE 6560–50–S

FEDERAL COMMUNICATIONS COMMISION

47 CFR Part 78

[CS Docket No. 99–250, FCC 02–149]

Cable Television Relay Service

AGENCY: Federal Communications Commission.

ACTION: Final rule.

SUMMARY: The Commission amends its rules to expand eligibility for licenses in the Cable Television Relay Service (CARS) to all Multichannel Video Programming Distributors (''MVPDs''). This action will enhance opportunities for additional competition to incumbent cable operators. It will increase the number of frequencies available to more MVPDs and treat all MVPDs equally for access to microwave frequencies. Thus, all MVPDs will have the opportunity to use CARS frequencies to support their delivery of video services in a balanced competitive environment.

DATES: Effective July 29, 2002, except for § 78.13(f), which contains information collection requirements that have not been approved by OMB. The Federal Communications Commission will publish a document in the **Federal Register** announcing the effective date.

FOR FURTHER INFORMATION CONTACT: Wayne T. McKee, 202–418–2355, or John P. Wong, 202–418–7012. For additional information concerning the information collection(s) contained in this document, contact Judith B. Herman at 202–418–0214, or via the Internet at *jboley@fcc.gov.*

SUPPLEMENTARY INFORMATION: This is a summary of the Commission's Report and Order (R&O) in CS Docket No. 99–250; FCC 02–149, adopted May 21, 2002, and released May 21, 2002. The complete text of this R&O is available for inspection and copying during normal business hours in the FCC Reference Information Center, Courtyard Level, 445 12th Street, SW., Washington, DC, and also may be purchased from the Commission's copy contractor, Qualex International, Portals II, 445 12th Street, SW., Room CY–B402, Washington, DC 20554, telephone 202–863–2893, facsimile 202–863–2898, or via e-mail at *qualexint@aol.com.* Alternative formats (computer diskette, large print, audio cassettes, and Braille) are available to persons with disabilities by contacting Brian Millin at 202–418–7426, TTY 202–418–7365, or at *bmillin @fcc.gov.* In addition to filing comments with the Office of the Secretary, a copy of any comments on the information collection(s) contained herein should be submitted to Judith B. Herman, Federal Communications Commission, Room 1-C804, 445 12th Street, SW, Washington, DC 20554, or via the Internet to *jboley@fcc.gov.*

The Notice of Proposed Rule Making (NPRM) in this proceeding may be found at 64 FR 41899, August 2, 1999.

Synopsis of the Report and Order

All Multichannel Video Programming Distributors (MVPDs) will now be eligible for licenses to operate microwave facilities in the Cable Television Relay Service (CARS). Currently, franchised cable systems and wireless cable systems are eligible for CARS licenses, but private cable operators (PCOs), Direct Broadcast Satellite (DBS), Open Video Systems (OVS) and others are not. This action enhances opportunities for additional competition to incumbent cable operators by making MVPDs eligible to use all CARS frequencies, including frequencies in the 12 GHz CARS band (12.70 to 13.20 GHz). It also increases the number of frequencies available to PCOs and other MVPDs for video programming distribution in the 18 GHz band (17.70 to 18.58 GHz), in addition to those on which they may currently operate under part 101 of the Commission's rules. Thus, all MVPDs will have the opportunity to use CARS frequencies to provide video services in a balanced competitive environment in which all MVPDs share microwave spectrum.

CARS licensees may now use the frequency band segment from 13.20 to 13.25 GHz for delivery of video programming on a secondary basis. CARS license applicants need no longer apply for waivers for minor variations in the frequency of channels. They may apply for the usual channel changes as an alternate channel regime. A frequency coordinator suggested that CARS should use the same frequency coordination procedures as other services that share these frequencies; this suggestion is adopted.

Paperwork Reduction Act

This Report and Order contains a modified information collection. The Commission, as part of its continuing effort to reduce paperwork burdens, invites the general public to comment on the information collection(s) contained in this Report and Order as required by the Paperwork Reduction Act of 1995, Public Law 104–13. Public and agency comments are due August 26, 2002.

Final Regulatory Flexibility Analysis

As required by the Regulatory Flexibility Act (''RFA''), an Initial Regulatory Flexibility Analysis (''IRFA'') was incorporated in the Notice of Proposed Rulemaking (''NPRM'') in CS Docket No. 99–250, FCC 99–166. The Commission sought written public comment on the proposals in the NPRM, including comment on the IRFA. This Final Regulatory Flexibility Analysis (''FRFA'') conforms to the RFA.

A. Need for, and Objectives of, this Report and Order

The Commission undertook this proceeding in response to a petition for rulemaking filed by OpTel, Inc. The NPRM sought comment on OpTel's request that we expand the definition of entities eligible to use the 12 GHz Cable Television Relay Service (''CARS'') frequency band to include private cable operators (''PCOs''). CARS is a microwave radio service used predominantly by cable systems to provide video links between portions of their systems. PCOs provide a video service similar to cable systems, for example, to apartment buildings, but PCOs do not use public rights-of-way. By its own motion, the Commission expanded the NPRM to include other multichannel video programming distributors (''MVPDs''). MVPDs are anyone who provides multiple channels of video programming to subscribers. This Report and Order adopts rules which will increase competition to incumbent, franchised cable operators, particularly with regard to video programming service to multi-dwelling units, by expanding eligibility to use the CARS band to PCOs and other MVPDs, such as direct broadcast satellite (''DBS'') and open video systems (''OVS''). This Report and Order promotes competition in multichannel video programming distribution by allowing new services to compete with existing services by giving those new services access to the same technologies as existing services while balancing the interests of incumbent distributors by not hampering their use of those technologies.

B. Summary of Significant Issues Raised by Public Comments in Response to IRFA

We received one comment in direct response to the IRFA. The Society of Broadcast Engineers (''SBE'') states that the Commission analysis in the IRFA of the impact on small entities did not include the needs for production spectrum of television broadcasters and Local Television Transmission Service

(''LTTS''). Although the IRFA did not specifically mention broadcasters or LTTS providers, the Commission did request comment concerning the impact on small businesses, small organizations, and small business concerns. In addition, the NPRM requested comment on ''the compatibility of shared use of the spectrum between fixed PCOs and mobile [broadcast auxiliary stations]'' and on ''any existing or future impact this sharing may have with BAS, especially as it relates to the required digital transition for broadcasters.'' SBE and others discussed this specific issue in their comments. Briefly, SBE opposes use of the spectrum from 13.20 GHz to 13.25 GHz by PCOs as proposed by the PCOs. The Order addresses and pays all due deference to the concerns and issues raised. The PCOs are allocated the spectrum only as secondary users of the spectrum from 13.20 GHz to 13.25 GHz, which means they cannot cause interference to television broadcasters or LTTS providers.

C. Description and Estimate of the Number of Small Entities to Which the Rules Will Apply

The RFA directs the Commission to provide a description of and, where feasible, an estimate of the number of small entities that will be affected by the rules adopted herein. The RFA defines the term ''small entity'' as having the same meaning as the terms ''small business,'' ''small organization,'' and ''small governmental jurisdiction'' under section 3 of the Small Business Act. Under the Small Business Act, a small business concern is one which: (1) Is independently owned and operated; (2) is not dominant in its field of operation; and (3) satisfies any additional criteria established by the Small Business Administration (''SBA''). A small organization is generally ''any not-for-profit enterprise which is independently owned and operated and is not dominant in its field.'' Nationwide, as of 1992, there were approximately 275,801 small organizations. ''Small government jurisdiction'' generally means ''governments of cities, counties, towns, townships, villages, school districts, or special districts, with a population of less than 50,000.'' As of 1992, there were approximately 85,006 governmental entities in the United States. This number includes 38,978 counties, cities, and towns: of these, 37,566, or 96%, have populations of fewer than 50,000. The Census Bureau estimates that this ratio is approximately accurate for all governmental entities. Thus, of the 85,006 governmental entities, we estimate that 81,600 (96%) are small entities. Below, we further describe and estimate the number of small entity licensees and regulatees that may be affected by these rules.

The rules we adopt as a result of the Report and Order will add PCOs and other MVPDs to those entities eligible to use the 12 GHz CARS frequency band. The 12 GHz CARS frequency band, 12.70 GHz–13.25 GHz, is currently used by franchised cable, licensees and conditional licensees of channels in the Multipoint Distribution Service (''MDS''), Multichannel, Multipoint Distribution Service (''MMDS''), and Instructional Television Fixed Services (''ITFS''). The 12 GHz CARS spectrum, 12 GHz–12.35 GHz, is also used by television broadcasters for both fixed and short-range mobile transmissions by Broadcast Auxiliary Stations (''BAS'').

Small MVPDs. SBA has developed a definition of small entities for cable and other pay television services, which includes such companies generating $11 million or less in annual receipts. This definition includes cable system operators, closed circuit television services, direct broadcast satellite services, multipoint distribution systems, satellite master antenna systems, and subscription television services. According to the Census Bureau, there were 1,423 such cable and other pay television services generating less than $11 million in revenue. We address below services individually to provide a more precise estimate of small entities.

The Commission has developed, with SBA's approval, its own definition of a small cable system operator for the purposes of rate regulation. Under the Commission's rules, a ''small cable company'' is one serving fewer than 400,000 subscribers nationwide. Based on our most recent information, we estimate that there were 1439 cable operators that qualified as small cable companies at the end of 1995. Since then, some of those companies may have grown to serve over 400,000 subscribers, and others may have been involved in transactions that caused them to be combined with other cable operators. The Commission's rules define a ''small system,'' for the purposes of rate regulation, as a cable system with 15,000 or fewer subscribers. The Commission does not request nor does the Commission collect information concerning cable systems serving 15,000 or fewer subscribers and thus is unable to estimate, at this time, the number of small cable systems nationwide.

The Communications Act also contains a definition of a small cable system operator, which is ''a cable operator that, directly of through an affiliate, serves in the aggregate fewer than 1% of all subscribers in the United States and is not affiliated with any entity or entities whose gross annual revenues in the aggregate exceed $250,000,000.'' The Commission has determined that there are 61,700,000 subscribers in the United States. Therefore, a cable operator serving fewer than 617,000 subscribers shall be deemed a small operator, if its annual revenues, when combined with the total annual revenues of all of its affiliates, do not exceed $250 million in the aggregate. Based on available data, we find that the number of cable operators serving 617,000 subscribers or less totals approximately 1450. Although it seems certain that some of these cable system operators are affiliated with entities whose gross annual revenues exceed $250,000,000, we are unable at this time to estimate with greater precision the number of cable system operators that would qualify as small cable operators under definition in the Communications Act. It should be further noted that recent industry estimates project that there will be a total of 64,000,000 subscribers and we have based our fee revenue estimates on that figure.

Private Cable Operators/Satellite Master Antenna Systems. Based on our most recent information, we estimate that there are 3400 private cable operators serving multiple dwelling units that qualify as small cable companies. Some of those companies may have grown to serve from 800,000 to 1.6 million subscribers, and others may have been involved in transactions that caused them to be combined with other cable operators. Consequently, we estimate that there are fewer than 3,400 small entity private cable system operators that may be affected by the decisions and rules we are adopting.

Open Video System (''OVS''). The Commission has certified eleven OVS operators. Of these eleven, only two are providing service. Affiliates of residential Communications Network, Inc. (''RCN'') received approval to operate OVS systems in New York City, Boston, Washington, D.C., and other areas. RCN has sufficient revenues to assure us that they do not qualify as small business entities. Little financial information is available for the other entities authorized to provide OVS service that are not yet operational. Given that other entities have been authorized to provide OVS service but have not yet begun to generate revenues,

we conclude that at least some of the OVS operators qualify as small entities.

Multichannel, Multipoint Distribution Service (''MMDS''). The Commission refined the definition of ''small entity'' for the auction of MMDS as an entity that, together with its affiliates, has average gross revenues that are not more than $40 million for the proceeding three calendar years. This definition of a small entity, in the context of the Commission's decision concerning MMDS auctions, has been approved by the SBA. The Commission completed its MMDS auction in March 1996 for authorization in 493 basic trading areas (''BTAs''). Of the 67 winning bidders, 61 qualified as small entities. Five winners indicated that they were minority-owned and four winners indicated that they were women-owned businesses. MMDS is an especially competitive service, with approximately 1573 previously authorized and proposed MMDS facilities. Information available to us indicates that no MMDS facility generates revenue in excess of $11 million annually. We conclude that there are approximately 1634 small MMDS providers as defined by the SBA and the Commission's auction rules.

D. Description of Projected Reporting, Record Keeping And other Compliance Requirements

This Report and Order makes an additional class that will be eligible for CARS licenses. As such, they will be subject to the reporting, record keeping, and other compliance requirements of CARS. These newly eligible entities will be required to file an application, FCC Form 327, to obtain a license and to modify or renew that license. They will also be required to maintain certain station records related to maintenance of the technical parameters of the station, as specified in § 78.69 of the Commission's rules.

E. Steps Taken To Minimize the Impact on Small Entities, and Significant Alternatives Considered

The RFA requires an agency to describe any significant alternatives that it has considered in developing its approach, which may include the following four alternatives (among others): ''(1) The establishment of differing compliance or reporting requirements or timetables that take into account the resources available to small entities; (2) the clarification, consolidation, or simplification of compliance and reporting requirements under the rule for such small entities; (3) the use of performance rather than design standards; and (4) an exemption from coverage of the rule, or any part thereof, for such small entities.''

This Report and Order creates opportunities for small entities, such as PCOs and other MVPDs, to compete with incumbent providers of video programming in the 12 GHz CARS frequency band. The Commission's decision will allow new entrants, many of whom are deemed to be small entities, to have access to the 12 GHz CARS frequency band on an equal basis with franchised cable operators and other users. No significant alternatives were considered other than to examine whether the options currently available to the entities currently not eligible for CARS licenses are adequate for their needs. These options are use of 18 GHz frequencies or 23 GHz frequencies under part 101 of the Commission's rules. In the Order, the Commission has decided that because the 12 GHz CARS band provides greater range at a reduced cost, that the petitioning PCOs should be given the relief requested. On its own motion, the Commission extended the eligibility to use the 12 GHz CARS band to all MVPDs. Further, the Commission made these entities eligible to use all CARS frequencies, rather than just the 12 GHz band. This will eliminate a significant barrier to entry into the MVPD market for small entities and will lessen the cost of expansion for others. Small entities, from a regulatory standpoint, will now be on a par with wireless cable operators and, in this sense, with cable systems.

Report to Congress. We will send a copy of this Report and Order, including this FRFA, in a report to Congress pursuant to the Congressional Review Act of 1996, 5 U.S.C. 801(a)(1)(A). A copy of this report and Order and FRFA (or summary thereof) will also be published in the **Federal Register**, pursuant to 5 U.S.C. 604(b), and will be sent to the Chief Counsel for Advocacy of the Small Business Administration.

Ordering Clauses

Accordingly, IT IS ORDERED that, pursuant to authority found in sections 4(i)–(j) of the Communications Act of 1934, as amended, 47 U.S.C. 154(i)–(j), 303(c), (f), and (r), and 309(j), the Commission's rules ARE AMENDED as set forth in this Order.

IT IS FURTHER ORDERED that the amendments to §§ 78.18 and 78.36 of the Commission's rules WILL BECOME EFFECTIVE July 29, 2002. The action contained herein has been analyzed with respect to the Paperwork Reduction Act of 1995 and found to impose new or modified reporting or record keeping requirements or burdens on the public. Implementation of these new or modified reporting or record keeping requirements will be subject to approval by the Office of Management and Budget (OMB) as prescribed by the Paperwork Reduction Act. Consequently, amendments to § 78.13 of the Commission's rules WILL NOT BECOME EFFECTIVE until OMB approval of the modified reporting or record keeping requirements.

IT IS FURTHER ORDERED that the Consumer and Governmental Affairs Bureau, Reference Information Center, SHALL SEND a copy of this Report and Order, including the Final Regulatory Flexibility Analysis, to the Chief Counsel for Advocacy of the Small Business Administration.

List of Subjects in 47 CFR Part 78

Cable television, Communications equipment, Radio, Reporting and recordkeeping requirements.

Federal Communications Commission.

Marlene H. Dortch,

Secretary.

Rule Changes

For the reasons discussed in the preamble, the Federal Communications Commission amends 47 CFR part 78 as follows:

PART 78—CABLE TELEVISION RELAY SERVICE

1. The authority for part 78 continues to read as follows:

Authority: Secs. 2, 3, 4, 301, 303, 307, 308, 309, 48 Stat., as amended, 1064, 1065, 1066, 1081, 1082, 1083, 1084, 1085; 47 U.S.C. 152, 153, 154, 301, 303, 307, 308, 309.

2. In § 78.13, add paragraph (f) to read as follows:

§ 78.13 Eligibility for license.

* * * * *

(f) To private cable operators and other multichannel video programming distributors not specifically identified in this section.

3. In § 78.18, revise the tables in paragraph (a)(2) and add paragraph (m) to read as follows:

§ 78.18 Frequency assignments.

(a) * * *

(2) * * *

GROUP C CHANNELS

Designation	Channel boundaries (GHz) [C channels]	Alternate channel boundaries (GHz) [Ca channels]
C01 [1]	12.7005–12.7065	12.7005–12.7065
C02 [1]	12.7065–12.7125	12.7065–12.7125
C03 [1]	12.7125–12.7185	12.7125–12.7185
C04 [1]	[2] 12.7185–12.7225	12.7185–12.7245
C05 [1]	12.7225–12.7285	12.7225–12.7305
C06 [1]	12.7285–12.7345	12.7285–12.7365
C07 [1]	12.7345–12.7405	12.7345–12.7425
C08 [1]	12.7405–12.7465	12.7405–12.7485
C09 [1]	12.7465–12.7525	12.7465–12.7545
C10 [1]	[2] 12.7525–12–7545	N/A
C11 [1]	12.7545–12.7605	12.7545–12.7605
C12 [1]	12.7605–12.7665	12.7605–12.7665
C13 [1]	12.7665–12.7725	12.7665–12.7725
C14 [1]	12.7725–12.7785	12.7725–12.7785
C15 [1]	12.7785–12.7845	12.7785–12.7845
C16 [1]	12.7845–12.7905	12.7845–12.7905
C17 [1]	12.7905–12.7965	12.7905–12.7965
C18 [1]	12.7965–12.8025	12.7965–12.8025
C19 [1]	12.8025–12.8085	12.8025–12.8085
C20 [1]	12.8085–12.8145	12.8085–12.8145
C21 [1]	12.8145–12.8205	12.8145–12.8205
C22 [1]	12.8205–12.8265	12.8205–12.8265
C23 [1]	12.8265–12.8325	12.8265–12.8325
C24 [1]	12.8325–12.8385	12.8325–12.8385
C25 [1]	12.8385–12.8445	12.8385–12.8445
C26 [1]	12.8445–12.8505	12.8445–12.8505
C27 [1]	12.8505–12.8565	12.8505–12.8565
C28 [1]	12.8565–12.8625	12.8565–12.8625
C29 [1]	12.8625–12.8685	12.8625–12.8685
C30 [1]	12.8685–12.8745	12.8685–12.8745
C31 [1]	12.8745–12.8805	12.8745–12.8805
C32 [1]	12.8805–12.8865	12.8805–12.8865
C33 [1]	12.8865–12.8925	12.8865–12.8925
C34 [1]	12.8925–12.8985	12.8925–12.8985
C35 [1]	12.8985–12.9045	12.8985–12.9045
C36 [1]	12.9045–12.9105	12.9045–12.9105
C37 [1]	12.9105–12.9165	12.9105–12.9165
C38 [1]	12.9165–12.9225	12.9165–12.9225
C39 [1]	12.9225–12.9285	12.9225–12.9285
C40 [1]	12.9285–12.9345	12.9285–12.9345
C41 [1]	12.9345–12.9405	12.9345–12.9405
C42 [1]	12.9405–12.9465	12.9405–12.9465
C43 [1]	12.9465–12.9525	12.9465–12.9525

[1] See footnote 1 following GROUP A CHANNELS.
[2] For transmission of pilot subcarriers or other authorized narrow band signals.

GROUP D CHANNELS

Designation	Channel boundaries (GHz) [D channels]	Alternate channel boundaries (GHz) [Da channels]
D01 [1]	12.7597–12.7657	12.7597–12.7657
D02 [1]	12.7657–12.7717	12.7657–12.7717
D03 [1]	12.7717–12.7777	12.7717–12.7777
D04 [1]	[2] 12.7777–12.7817	12.7777–12.7837
D05 [1]	12.7817–12.7877	12.7837–12.7897
D06 [1]	12.7877–12.7937	12.7897–12.7957
D07 [1]	12.7937–12.7997	12.7957–12.8017
D08 [1]	12.7997–12.8057	12.8017–12.8077
D09 [1]	12.8057–12.8117	12.8077–12.8137
D10 [1]	[2] 12.8117–12–12.8137	N/A
D11 [1]	12.8137–12.8197	12.8137–12.8197
D12 [1]	12.8197–12.8257	12.8197–12.8257
D13 [1]	12.8257–12.8317	12.8257–12.8317
D14 [1]	12.8317–12.8377	12.8317–12.8377
D15 [1]	12.8377–12.8437	12.8377–12.8437
D16 [1]	12.8437–12.8497	12.8437–12.8497
D17 [1]	12.8497–12.8557	12.8497–12.8557
D18 [1]	12.8557–12.8617	12.8557–12.8617

GROUP D CHANNELS—Continued

Designation	Channel boundaries (GHz) [D channels]	Alternate channel boundaries (GHz) [Da channels]
D19 [1]	12.8617–12.8677	12.8617–12.8677
D20 [1]	12.8677–12.8737	12.8677–12.8737
D21 [1]	12.8737–12.8797	12.8737–12.8797
D22 [1]	12.8797–12.8857	12.8797–12.8857
D23 [1]	12.8857–12.8917	12.8857–12.8917
D24 [1]	12.8917–12.8977	12.8917–12.8977
D25 [1]	12.8977–12.9037	12.8977–12.9037
D26 [1]	12.9037–12.9097	12.9037–12.9097
D27 [1]	12.9097–12.9157	12.9097–12.9157
D28 [1]	12.9157–12.9217	12.9157–12.9217
D29 [1]	12.9217–12.9277	12.9217–12.9277
D30 [1]	12.9277–12.9337	12.9277–12.9337
D31 [1]	12.9337–12.9397	12.9337–12.9397
D32 [1]	12.9397–12.9457	12.9397–12.9457
D33 [1]	12.9457–12.9517	12.9457–12.9517
D34 [1]	12.9517–12.9577	12.9517–12.9577
D35 [1]	12.9577–12.9637	12.9577–12.9637
D36 [1]	12.9637–12.9697	12.9637–12.9697
D37 [1]	12.9697–12.9757	12.9697–12.9757
D38 [1]	12.9757–12.9817	12.9757–12.9817
D39 [1]	12.9817–12.9877	12.9817–12.9877
D40 [1]	12.9877–12.9937	12.9877–12.9937
D41 [1]	12.9937–12.9997	12.9937–12.9997
D42 [1]	12.9997–13.0057	12.9997–13.0057
D43 [1]	13.0057–13.0117	13.0057–13.0117

[1] See footnote 1 following GROUP A CHANNELS.
[2] For transmission of pilot subcarriers or other authorized narrow band signals.

GROUP E CHANNELS

Designation	Channel boundaries (GHz) [E channels]	Alternate channel boundaries (GHz) [Ea channels]
E01 [1]	12.9525–12.9585	12.9525–12.9585
E02 [1]	12.9585–12.9645	12.9585–12.9645
E03 [1]	12.9645–12.9705	12.9645–12.9705
E04 [1]	[2] 12.9705–12.9745	12.9705–12.9765
E05 [1]	12.9745–12.9805	12.9765–12.9825
E06 [1]	12.9805–12.9865	12.9825–12.9885
E07 [1]	12.9865–12.9925	12.9885–12.9945
E08 [1]	12.9925–12.9985	12.9945–13.0005
E09 [1]	12.9985–13.0045	13.0005–13.0065
E10 [1]	[2] 13.0045–13.0065	N/A
E11 [1]	13.0065–13.0125	13.0065–13.0125
E12 [1]	13.0125–13.0185	13.0125–13.0185
E13 [1]	13.0185–13.0245	13.0185–13.0245
E14 [1]	13.0245–13.0305	13.0245–13.0305
E15 [1]	13.0305–13.0365	13.0305–13.0365
E16 [1]	13.0365–13.0425	13.0365–13.0425
E17 [1]	13.0425–13.0485	13.0425–13.0485
E18 [1]	13.0485–13.0545	13.0485–13.0545
E19 [1]	13.0545–13.0605	13.0545–13.0605
E20 [1]	13.0605–13.0665	13.0605–13.0665
E21 [1]	13.0665–13.0725	13.0665–13.0725
E22 [1]	13.0725–13.0785	13.0725–13.0785
E23 [1]	13.0785–13.0845	13.0785–13.0845
E24 [1]	13.0845–13.0905	13.0845–13.0905
E25 [1]	13.0905–13.0965	13.0905–13.0965
E26 [1]	13.0965–13.1025	13.0965–13.1025
E27 [1]	13.1025–13.1085	13.1025–13.1085
E28 [1]	13.1085–13.1145	13.1085–13.1145
E29 [1]	13.1145–13.1205	13.1145–13.1205
E30 [1]	13.1205–13.1265	13.1205–13.1265
E31 [1]	13.1265–13.1325	13.1265–13.1325
E32 [1]	13.1325–13.1385	13.1325–13.1385
E33 [1]	13.1385–13.1445	13.1385–13.1445
E34 [1]	[3] 13.1445–13.1505	[3] 13.1445–13.1505
E35 [1]	[3] 13.1505–13.1565	[3] 13.1505–13.1565
E36 [1]	[3] 13.1565–13.1625	[3] 13.1565–13.1625

GROUP E CHANNELS—Continued

Designation	Channel boundaries (GHz) [E channels]	Alternate channel boundaries (GHz) [Ea channels]
E37 [1]	[3] 13.1625–13.1685	[3] 13.1625–13.1685
E38 [1]	[3] 13.1685–13.1745	[3] 13.1685–13.1745
E39 [1]	[3] 13.1745–13.1805	[3] 13.1745–13.1805
E40 [1]	[3] 13.1805–13.1865	[3] 13.1805–13.1865
E41 [1]	[3] 13.1865–13.1925	[3] 13.1865–13.1925
E42 [1]	[3] 13.1925–13.1985	[3] 13.1925–13.1985

[1] See footnote 1 following GROUP A CHANNELS.
[2] For transmission of pilot subcarriers or other authorized narrow band signals.
[3] See paragraph (l) of this section.

GROUP F CHANNELS

Designation	Channel boundaries (GHz) [F channels]	Alternate channel boundaries (GHz) [Fa channels]
F01 [1]	13.0125–13.0185	13.0125–13.0185
F02 [1]	13.0185–13.0245	13.0185–13.0245
F03 [1]	13.0245–13.0305	13.0245–13.0305
F04 [1]	[2] 13.0305–13.0345	13.0305–13.0365
F05 [1]	13.0345–13.0405	13.0365–13.0425
F06 [1]	13.0405–13.0465	13.0425–13.0485
F07 [1]	13.0465–13.0525	13.0485–13.0545
F08 [1]	13.0525–13.0585	13.0545–13.0605
F09 [1]	13.0585–13.0645	13.0605–13.0665
F10 [1]	[2] 13.0645–13.0665	N/A
F11 [1]	13.0665–13.0725	13.0665–13.0725
F12 [1]	13.0725–13.0785	13.0725–13.0785
F13 [1]	13.0785–13.0845	13.0785–13.0845
F14 [1]	13.0845–13.0905	13.0845–13.0905
F15 [1]	13.0905–13.0965	13.0905–13.0965
F16 [1]	13.0965–13.1025	13.0965–13.1025
F17 [1]	13.1025–13.1085	13.1025–13.1085
F18 [1]	13.1085–13.1145	13.1085–13.1145
F19 [1]	13.1145–13.1205	13.1145–13.1205
F20 [1]	13.1205–13.1265	13.1205–13.1265
F21 [1]	13.1265–13.1325	13.1265–13.1325
F22 [1]	13.1325–13.1385	13.1325–13.1385
F23 [1]	13.1385–13.1445	13.1385–13.1445
F24 [1]	[3] 13.1445–13.1505	[3] 13.1445–13.1505
F25 [1]	[3] 13.1505–13.1565	[3] 13.1505–13.1565
F26 [1]	[3] 13.1565–13.1625	[3] 13.1565–13.1625
F27 [1]	[3] 13.1625–13.1685	[3] 13.1625–13.1685
F28 [1]	[3] 13.1685–13.1745	[3] 13.1685–13.1745
F29 [1]	[3] 13.1745–13.1805	[3] 13.1745–13.1805
F30 [1]	[3] 13.1805–13.1865	[3] 13.1805–13.1865
F31 [1]	[3] 13.1865–13.1925	[3] 13.1865–13.1925
F32 [1]	[3] 13.1925–13.1985	[3] 13.1925–13.1985

[1] See footnote 1 following GROUP A CHANNELS.
[2] For transmission of pilot subcarriers or other authorized narrow band signals.
[3] See paragraph (l) of this section.

* * * * *

(m) CARS stations may be authorized use of the band from 13.20 to 13.25 GHz on a secondary basis to Television Broadcast Auxiliary Stations. Any CARS application seeking authorization for use of the 13.20 to 13.25 GHz band must demonstrate that the applicant has exhausted all spectrum available to it in the 12.70 to 13.20 GHz band. Applications for use of this band must specify whether the channels are 6 MHz, 12.5 MHz, or 25 MHz wide and give the upper and lower boundaries and the polarization for each channel.

4. Revise § 78.36 to read as follows:

§ 78.36 Frequency coordination.

Coordination of fixed and mobile assignments will be in accordance with the procedure established in § 101.103(d) of this chapter.

[FR Doc. 02–16093 Filed 6–26–02; 8:45 am]

BILLING CODE 6412–01–P

Proposed Rules

Federal Register
Vol. 67, No. 124
Thursday, June 27, 2002

This section of the FEDERAL REGISTER contains notices to the public of the proposed issuance of rules and regulations. The purpose of these notices is to give interested persons an opportunity to participate in the rule making prior to the adoption of the final rules.

DEPARTMENT OF STATE

22 CFR Part 62

[Public Notice 4054]

Participation in the Exchange Visitor Program as Professor and Research Scholar

AGENCY: Department of State.

ACTION: Proposed rule with request for comment.

SUMMARY: The Department is proposing to amend its existing regulations governing participation in the Exchange Visitor Program as a professor and research scholar. These proposed amendments will extend the duration of program participation from three years to five years and eliminate program extensions beyond the five-year period. Limitations governing the eligibility for program participation of professor and research scholar participants are also included. These limitations enhance the integrity and programmatic effectiveness of the Exchange Visitor Program.

DATES: Written comments regarding this rule will be accepted until July 29, 2002.

ADDRESSES: Comments regarding this rule must be presented in duplicate and addressed as follows: U.S. Department of State, Office of Exchange Coordination and Designation, Bureau of Educational and Cultural Affairs, 301 4th Street, SW., Room 852, Washington, DC 20547.

FOR FURTHER INFORMATION CONTACT: Stanley S. Colvin, Acting Director, Office of Exchange Coordination and Designation, U.S. Department of State, 301 Fourth Street, SW., Room 852, Washington, DC 20547; telephone (202) 401–9810; fax (202) 401–9809.

SUPPLEMENTARY INFORMATION: Since 1949, a three-year period of program duration has been afforded to professors and research scholars participating in Department-designated exchange visitor programs. During the development of comprehensive rules published in 1993, numerous comments were received suggesting that the period of program duration for professors and research scholars should be greater than three years. In recent consultation with the academic community, there has once again been great interest in extending the program duration for this category.

Accordingly, the Department proposes to amend existing regulatory provisions under the professor and research scholar category at section 22 CFR 62.20(i) to permit a maximum duration of program participation of five years. Calculation of the five years shall begin from the initial program start date listed on the DS–2019 pursuant to which professor or research scholar participant status is acquired and shall end five years from that date. (Example: July 1, 2002–July 1, 2007). It shall include time spent outside the United States. With this change to the length of program duration, the Department is of the opinion that extensions beyond the proposed five-year maximum period of program duration will be inappropriate. Therefore, the Department proposes the deletion of section 22 CFR 62.20(j) regarding extensions to the professor and research category. If adopted, these amendments would also permit program sponsors to extend a current participant's program up to the maximum program duration of five years. Extensions beyond the duration of participation are not permitted under this category.

The Department also proposes to limit repeated program participation. No individual who has been afforded a five-year period of program participation as a professor or research scholar will be eligible for repeat participation in the professor or research scholar category for a period of two years from the end date of his/her prior program. This provision is proposed to ensure that the reciprocal exchange objectives underlying the Exchange Visitor Program are met, and that the exchange visitor's visa is not misused for long-term employment purposes.

The twelve-month bar will remain as stated in section 22 CFR 62.20(d)(ii). This regulation places a twelve-month bar from continued program participation upon individuals who have been physically present in the United States for all or part of the twelve months immediately preceding their commencement of program participation as a professor or research scholar. However, 22 CFR 62.20(d)(ii) does provide exceptions to the application of the twelve-month bar including one for prospective participants who have previously participated in the Exchange Visitor Program as short-term scholars.

The Department invites comments regarding this proposed rule. The Department will accept comments for 30 days following publication of this proposed rule. A final rule will be adopted following Department review of all comments received and coordination with the adoption of the Student and Exchange Visitor Information System (SEVIS).

Regulatory Analysis and Notices

Administrative Procedure Act

The Department is publishing this rule as a proposed rule, with a 30-day provision for post-promulgation public comments, based on the ''good cause'' exceptions set forth at 5 U.S.C. 553(b)(3)(B) and 553(d)(3). The proposed changes will provide notice and a comment period prior to adoption of this rule.

Regulatory Flexibility Act

The Department of State, in accordance with the Regulatory Flexibility Act (5 USC 605(b)), has reviewed this regulation and, by approving it, certifies that this rule is not expected to have a significant economic impact on a substantial number of small entities.

Unfunded Mandates Reform Act of 1995

This rule will not result in the expenditure by State, local and tribal governments, in the aggregate, or by the private sector, of $100 million in any year and it will not significantly or uniquely affect small governments. Therefore, no actions were deemed necessary under the provisions of the Unfunded Mandates Reform Act of 1995.

Small Business Regulatory Enforcement Fairness Act of 1996

This rule is not a major rule as defined by section 804 of the Small Business Regulatory Enforcement Act of 1996. This rule will not result in an annual effect on the economy of $100 million or more; a major increase in costs or prices; or significant adverse effects on competition, employment,

investment, productivity, innovation, or on the ability of United States-based companies to compete with foreign-based companies in domestic and export markets.

Executive Order 12866

The Department of State does not consider this rule to be a ''significant regulatory action'' under Executive Order 12866, section 3(f), Regulatory Planning and Review. In addition, the Department is exempt from Executive Order 12866 except to the extent that it is promulgating regulations in conjunction with a domestic agency that are significant regulatory actions. The Department has nevertheless reviewed the regulation to ensure its consistency with the regulatory philosophy and principles set forth in that Executive Order.

Executive Order 13132

This regulation will not have substantial direct effects on the States, on the relationship between the national government and the States, or on the distribution of power and responsibilities among the various levels of government. Therefore, in accordance with section 6 of Executive Order 13132, it is determined that this rule does not have sufficient federalism implications to require consultations or warrant the preparation of a federalism summary impact statement.

Paperwork Reduction Act

This rule does not impose any new reporting or record-keeping requirements subject to the Paperwork Reduction Act, 44 U.S.C. Chapter 35.

List of Subjects in 22 CFR Part 62

Cultural exchange programs.

Accordingly, 22 CFR part 62 is proposed to be amended as follows:

PART 62—EXCHANGE VISITOR PROGRAM

1. The authority citation for part 62 continues to read as follows:

Authority: 8 U.S.C. 1101(a)(15)(J), 1182, 1184, 1258; 22 U.S.C. 1431–1442, 2451–2460; Foreign Affairs Reform and Restructuring Act of 1998, Pub. L. 105–277, 112 Stat. 2681 *et seq.*; Reorganization Plan No. 2 of 1977, 3 CFR, 1977 Comp. p.200; E.O.12048 of March 27, 1978; 3 CFR, 1978 Comp. p. 168.

2. Amend § 62.20 by revising paragraph (i) and removing paragraph (j) to read as follows:

§ 62.20 Professors and research scholars.

* * * * *

(i) *Duration of participation.* The permitted duration of program participation for a professor or research scholar shall be as follows:

(1) *General limitation.* The professor and research scholar shall be authorized to participate in the Exchange Visitor Program for the length of time necessary to complete his or her program, which time shall not exceed five years. The five-year period of permitted program participation shall begin with the initial program start date listed on the DS–2019 pursuant to which professor or research scholar participant status is acquired and shall end five years from such date. It shall include time spent outside the United States.

(2) *Repeat Participation.* Individuals who have entered the United States under the Exchange Visitor Program as a professor or research scholar, or who have acquired such status while in the United States shall not be eligible for repeat participation as a professor or research scholar for a period of two years.

(3) *Change of category.* A change between the categories of professor and research scholar shall not extend an exchange visitor's permitted period of participation beyond five years.

(4) Extensions beyond the duration of participation are not permitted under this category.

Dated: June 4, 2002.

Patricia S. Harrison,

Assistant Secretary, Bureau of Educational and Cultural Affairs, Department of State.

[FR Doc. 02–16157 Filed 6–26–02; 8:45 am]

BILLING CODE 4710–05–P

FEDERAL COMMUNICATIONS COMMISSION

47 CFR Parts 73 and 76

[MM Docket No. 98–204; DA 02–1025]

En Banc Hearing on Broadcast and Cable EEO Rules and Policies

AGENCY: Federal Communications Commission.

ACTION: Proposed rule; clarification.

SUMMARY: On June 20, 2002, the Commission released a document announcing the June 24, 2002, *en banc* hearing to discuss issues and views on the Commission's proceeding to promulgate new broadcast and cable equal employment opportunity (EEO) rules. The intended effect of this action is to clarify the public notification of the Commission's *en banc* hearing.

DATES: The *en banc* hearing will convene from 10 a.m. to 1 p.m. on June 24, 2002.

ADDRESSES: The hearing will be held at the Federal Communications Commission, 445 12th Street, SW., Washington, DC in the Commission Meeting Room (Room TW–C305).

FOR FURTHER INFORMATION CONTACT: Jamila Bess Johnson, Media Bureau. (202) 418–7200.

SUPPLEMENTARY INFORMATION:

1. By a document dated and released June 20, 2002, the Federal Communications Commission announced that it will hold an *en banc* hearing open to the public. The purpose of the *en banc* is to assist the Commission in its examination of the EEO rules applicable to broadcast and cable entities.

2. The *en banc* hearing was previously announced in Public Notice DA 02–1025 (May 3, 2002), but that public notice inadvertently was not published in the **Federal Register**. Accordingly, the Commission re-released the public notice pursuant to § 0.605(e) of its rules, 47 CFR 0.605(e). The Commission determined that to the extent the previous public notice was insufficient for purposes of § 0.605, the prompt and orderly conduct of the Commission's business required that this notice be issued less than one week prior to the *en banc* hearing and that earlier notice was not practicable, since the failure to publish the earlier public notice was just discovered.

Federal Communications Commission.

W. Kenneth Ferree,

Chief, Media Bureau.

[FR Doc. 02–16190 Filed 6–26–02; 8:45 am]

BILLING CODE 6712–01–P

DEPARTMENT OF COMMERCE

National Oceanic and Atmospheric Administration

50 CFR Part 600

[I.D. 061102B]

Magnuson-Stevens Act Provisions; General Provisions for Domestic Fisheries; Application for Exempted Fishing Permits (EFPs)

AGENCY: National Marine Fisheries Service (NMFS), National Oceanic and Atmospheric Administration (NOAA), Commerce.

ACTION: Notification of a proposal for EFPs to conduct experimental fishing; request for comments.

SUMMARY: The Administrator, Northeast Region, NMFS (Regional Administrator) has made a preliminary determination that the subject EFP application

contains all the required information and warrants further consideration. The Regional Administrator has also made a preliminary determination that the activities authorized under the EFP would be consistent with the goals and objectives of the Summer Flounder, Scup and Black Sea Bass Fishery Management Plan (FMP). However, further review and consultation may be necessary before a final determination is made to issue an EFP. Therefore, NMFS announces that the Regional Administrator proposes to issue an EFP that would allow one vessel to conduct fishing operations otherwise restricted by the regulations governing the fisheries of the Northeastern United States. The EFP would allow for an exemption to the black sea bass, *Centropristis striata*, closure requirements of the FMP. The experiment, coordinated by the Virginia Institute of Marine Sciences (VIMS), proposes to conduct fishing activities to compare black sea bass retention and discard rates using two different black sea bass pot escape vent configurations. Regulations under the Magnuson-Stevens Fishery Conservation and Management Act require publication of this notification to provide interested parties the opportunity to comment on applications for proposed EFPs.

DATES: Comments on this document must be received on or before 5 p.m. EST July 12, 2002.

ADDRESSES: Written comments should be sent to Patricia A. Kurkul, Regional Administrator, NMFS, Northeast Regional Office, 1 Blackburn Drive, Gloucester, MA 01930. Mark the outside of the envelope ''Comments on BSB Escape Vent EFP Proposal.'' Comments may also be sent via facsimile (fax) to (978) 281–9135.

FOR FURTHER INFORMATION CONTACT: Richard A. Pearson, Fishery Policy Analyst, 978–281–9279.

SUPPLEMENTARY INFORMATION: An application for an EFP was submitted to NMFS by VIMS on April 23, 2002. The EFP is being requested to facilitate a research project that would compare black sea bass retention and discard rates using two different escape vent configurations in black sea bass pots. Approximately 15 fishing trips would be conducted off the coasts of Maryland and Virginia during the autumn of 2002. To provide the greatest potential for fishing success, it would be necessary to allow the vessel to fish for, and possess, black sea bass during closures that may be implemented due to the attainment of the commercial quota. Black sea bass harvested during closure periods would not be landed, and would be returned to the water as soon as practicable.

The project will compare differences in the escapement of undersized black sea bass (less than 11 inches (27.94 cm)) between currently mandated single, 2–inch (5.08-–cm) square escape vents and an experimental design in which the entire parlor section of the trap is constructed of 2–inch (5.08–cm) square mesh. The objective of the research is to investigate the effectiveness of the experimental trap design at reducing the retention and discard of sublegal black sea bass, without affecting the retention rate of legal-sized black sea bass.

Traps with a single, 2–inch (5.08–cm) square escape vent would serve as controls. The experiment would use a randomized survey whereby three traps (one control and two experimental) are connected by rope at regular intervals and deployed. One rope, or ''string,'' of traps would be deployed at 10 different fishing sites per trip. These sites will be in close enough proximity to allow the traps to be hauled twice per day. Sixty traps per day are proposed to be hauled (3/traps/string, 1 string/site, and 10 sites hauled twice daily). Approximately 15 day-long research fishing trips are proposed for the project during the autumn months of 2002. The fishing activity will occur primarily between Wachapreague, VA, and Ocean City, MD.

To facilitate the collection of data during periods with the greatest potential for fishing success, the EFP would exempt one commercial vessel from the closure regulations specified at 50 CFR part 648, subpart I, and allow the vessel to fish for and possess black sea bass during periods when the commercial fishery is closed due to attainment of the quarterly quota. VIMS researchers will be onboard the participating vessel during all research trips. Any black sea bass harvested during a closure period would not be allowed to be landed, and would be returned to the water as soon as practicable after measurement of the fish. The commercial vessel that would participate in the research project has two live tanks onboard, which should reduce any discard mortality to black sea bass that could occur during a closure. Therefore, the catch levels during closed seasons are not expected to have a detrimental impact on the black sea bass resource. Any landings that would occur during an open season would be reported in the Vessel Trip Report, as required, because the participating vessel possesses a commercial black sea bass moratorium permit.

Authority: 16 U.S.C. 1801 *et seq.*

Dated: June 21, 2002.

Virginia M. Fay,

Acting Director, Office of Sustainable Fisheries, National Marine Fisheries Service.

[FR Doc. 02–16281 Filed 6–26–02; 8:45 am]

BILLING CODE 3510–22–S

DEPARTMENT OF COMMERCE

National Oceanic and Atmospheric Administration

50 CFR Part 635

[Docket No. 020612146–2146–01; I.D. 042602F]

RIN 0648–AP90

Atlantic Highly Migratory Species; Atlantic Bluefin Tuna Quota Specifications and General Category Effort Controls

AGENCY: National Marine Fisheries Service (NMFS), National Oceanic and Atmospheric Administration (NOAA), Commerce.

ACTION: Proposed initial 2002 quota specifications and General category effort controls; public hearings; request for comments.

SUMMARY: NMFS proposes initial specifications for the Atlantic bluefin tuna (BFT) fishery to set BFT quota and General category effort controls for the fishing year beginning June 1, 2002. The proposed initial quota specifications and effort controls are necessary to implement the 1998 recommendation of the International Commission for the Conservation of Atlantic Tunas (ICCAT) establishing a rebuilding program for Western Atlantic BFT, which is required by the Atlantic Tunas Convention Act (ATCA), and to achieve domestic management objectives under the Magnuson-Stevens Fishery Conservation and Management Act (Magnuson-Stevens Act). NMFS will hold public hearings to receive comments from fishery participants and other members of the public regarding the proposed initial quota specifications and effort controls.

DATES: Written comments must be received on or before July 24, 2002.

The public hearings dates are:

1. July 8, 2002, 7 p.m.—9 p.m., Gloucester, MA.
2. July 9, 2002, 2 p.m.—4 p.m., Silver Spring, MD.
3. July 10, 2002, 7 p.m.—9 p.m., Atlantic Beach, NC.

ADDRESSES: Written comments on the proposed initial quota specifications and General category effort controls

should be sent to Christopher Rogers, Chief, Highly Migratory Species Management Division, Office of Sustainable Fisheries (F/SF1), NMFS, 1315 East-West Highway, Silver Spring, MD 20910–3282. Comments also may be sent via facsimile (fax) to (301) 713–1917. Comments will not be accepted if submitted via e-mail or the Internet.

The public hearing locations are:

1. Fuller Elementary School, 4 School House Road, Gloucester, MA 01930.
2. Silver Spring NOAA Science Center, 1301 East-West Highway, Silver Spring, MD 20910.
3. Atlantic Beach Sheraton Atlantic Beach Oceanfront Hotel, 2717 W. Fort Macon Road, Atlantic Beach, NC 28512.

FOR FURTHER INFORMATION CONTACT: Brad McHale (978) 281–9260.

SUPPLEMENTARY INFORMATION: Atlantic tunas are managed under the dual authority of the Magnuson-Stevens Act and ATCA. ATCA authorizes the Secretary of Commerce (Secretary) to implement binding recommendations of ICCAT. The authority to issue regulations under the Magnuson-Stevens Act and ATCA has been delegated from the Secretary to the Assistant Administrator for Fisheries, NOAA (AA).

Background

On May 28, 1999, NMFS published in the **Federal Register** (64 FR 29090) final regulations, effective July 1, 1999, implementing the Fishery Management Plan for Atlantic Tunas, Swordfish, and Sharks (HMS FMP) that was adopted and made available to the public in April 1999. The proposed initial specifications are necessary to implement the 1998 ICCAT recommendation, establishing a rebuilding program for Western Atlantic BFT, which is required by ATCA, and to achieve domestic management objectives under the Magnuson-Stevens Act. The proposed initial quota specifications would allocate the total ICCAT-recommended quota among the several established fishing categories, would carryover any unharvested 2001 fishing year quota, and would be consistent with the BFT rebuilding program as set forth in the HMS FMP.

NMFS proposes the 2002 fishing year (June 1, 2002—May 31, 2003) BFT initial quota specifications under the annual and inseason adjustment procedures of the HMS FMP. Also, in accordance with the HMS FMP, NMFS proposes the General category effort control schedule, including time-period subquotas and restricted fishing days (RFDs), for the upcoming fishing season. After consideration of public comment, NMFS will issue final initial specifications and publish them in the **Federal Register**. The final initial quota specifications may subsequently be adjusted during the course of the fishing year, consistent with the provisions of the HMS FMP. Notice of any such adjustments will be published in the **Federal Register**.

Domestic Quota Allocation

The HMS FMP and the implementing regulations established baseline percentage quota shares of the ICCAT-recommended U.S. BFT quota for each of the domestic fishing categories. These percentage shares were based on allocation procedures that had been developed by NMFS over several years. The baseline percentage quota shares established in the HMS FMP for fishing years beginning June 1, 1999 are as follows: General category— 47.1 percent; Harpoon category—3.9 percent; Purse Seine category—18.6 percent; Angling category—19.7 percent; Longline category—8.1 percent; Trap category—0.1 percent; and Reserve —2.5 percent.

The current ICCAT BFT quota recommendation allows, and U.S. regulations require, the addition or subtraction, as appropriate, of any underharvest or overharvest in a fishing year to the following fishing year, provided that such carryover does not result in overharvest of the total annual quota and is consistent with all applicable ICCAT recommendations, including restrictions on landings of school BFT. Therefore, NMFS proposes to adjust the 2002 fishing year quota specifications for the BFT fishery to account for underharvest and overharvest in the 2001 fishing year.

The General and Purse Seine category fisheries for BFT have been closed for the remainder of the 2001 fishing year (June 1, 2001 - May 31, 2002). The landings figures are still preliminary, however, and may be updated before the 2002 specifications are finalized. For the 2001 fishing year, NMFS has preliminarily determined that General category landings were higher than the adjusted General category quota by 13.0 mt and Purse Seine category landings were fewer than the adjusted Purse Seine category quota by 59.7 mt. Based on the estimated amount of Reserve that NMFS is maintaining for the landing of BFT taken during ongoing scientific research projects, NMFS estimates that 6.9 mt of Reserve remains unharvested from the 2001 fishing year. This remaining Reserve quota will be used to partially cover the General category overharvest in 2001.

Given estimated catch rates and available quota, the Angling Longline, Trap, and Harpoon category fisheries will remain open through May 31, 2002. As NMFS anticipates publication of final BFT quota specifications for the 2002 fishing year prior to the availability of final 2001 landings figures for these three categories, best estimates will be used to determine carryover amounts, if any. To date, Harpoon category landings are less than the adjusted Harpoon category quota by 22.0 mt and the Angling category has the following underharvests for the 2001 fishing year: School BFT—84.6 mt; large school/small medium BFT—70.3 mt; and large medium/giant BFT—1.0 mt. In addition, 20.1 mt remains in the school reserve. To date, 56.6 mt remain in the Longline category. The final initial 2002 BFT quota specifications will be issued based on updated 2001 landings. Should adjustments to the final initial 2002 BFT quota specifications be required based on the final 2001 BFT landings figures, NMFS will publish a **Federal Register** notice adjusting the final initial 2002 fishing year quota specifications.

In accordance with the regulations regarding annual adjustments at § 635.27(a)(9)(ii), NMFS proposes specifications for the 2002 fishing year that include carryover adjustments. The proposed quotas are: General category—647.2 mt; Harpoon category—76.1 mt; Purse Seine category—317.7 mt; Angling category—429.1 mt; Longline category—148.9 mt; and Trap category—2.3 mt. Additionally, 75.3 mt would be reserved for inseason allocations or to cover scientific research collection and potential overharvest in any category except the Purse Seine category. Regulations at 50 CFR 635.27(a)(9)(i) require Purse Seine category under or overharvests be subtracted from or added to each individual vessel's quota allocation, as appropriate. These proposed quotas include provisions for each category to carry forward any underharvest from 2001 to the 2002 fishing year. The exception to this is that the unused school reserve (approximately 20.1 mt) from 2001, along with an additional 20.0 mt of unused Longline South subcategory quota would be placed into the Reserve. This additional reserve quota would be allocated among the domestic fishing categories, as appropriate during the 2002 fishing year, in accordance with the inseason transfer criteria in the HMS regulations.

As part of the BFT rebuilding program, ICCAT recommended an allowance for dead discards. The U.S. dead discard allowance is 68 mt. The

2000 preliminary estimate of U.S. dead discards, as reported in pelagic longline vessel logbooks, totaled 67.0 mt (U.S. National Report to ICCAT 2001). As estimates of BFT dead discards for the 2001 fishing year will not be available for some time, the estimate for the 2000 calendar year was used to calculate the amount to be added to, or subtracted from, the U.S. BFT landings quota for 2002 as a result of dead discards. Estimates of dead discards from other gear types and fishing sectors that do not use the pelagic longline vessel logbook are unavailable at this time and thus are not included in this calculation. As U.S. fishing activity is estimated to have resulted in less dead discards than its allowance, the ICCAT recommendation and U.S. regulations state that the U.S. may add one half of the difference between the amount of dead discards and the allowance (i.e., 68.0 mt - 67.0 mt = 1.0 mt, 1.0 mt/2 = 0.5 mt) to its total allowed landings for the following year, or to individual fishing categories or to the Reserve. NMFS proposes to allocate the 0.5 mt to the Reserve quota, which could than be allocated to individual fishing categories as necessary during the fishing year.

Based on the proposed initial specifications, the Angling category quota of 429.1 mt would be divided as follows: School BFT—175.1 mt, with 98.1 mt to the northern area (north of 39° 18′ N. latitude), 77.0 mt to the southern area (south of 39° 18′ N. latitude), plus 20.5 mt held in reserve; large school/small medium BFT— 226.2 mt, with 120.5 mt to the northern area and 105.7 mt to the southern area; and large medium/giant BFT—7.3 mt, with 3.1 mt to the northern area and 4.2 mt to the southern area. These subquotas reflect the adjusted north-south dividing line (39° 18′ N. latitude) and percentage quota allocations in the northern and southern areas for the Angling category, as implemented by NMFS through a final rule on August 15, 2001 (66 FR 42801).

The Longline category quota of 148.9 mt would be subdivided as follows: 30.9 mt to longline vessels landing BFT north of 34° N. latitude and 118.0 mt to longline vessels landing BFT south of 34° N. latitude.

General Category Effort Controls

For the last several years, NMFS has implemented General category time-period subquotas to increase the likelihood that fishing would continue throughout the late summer and early fall fishing seasons. The subquotas are consistent with the objectives of the HMS FMP and are designed to address concerns regarding allocation of fishing opportunities, to assist with distribution and achievement of optimum yield, to allow for a late season fishery, and to improve market conditions and scientific monitoring.

The HMS FMP divides the annual General category quota into three time-period subquotas as follows: 60 percent for June-August, 30 percent for September, and 10 percent for October-December. These percentages would be applied to the adjusted 2002 coastwide quota for the General category of 637.2 mt, with the remaining 10.0 mt being reserved for the New York Bight fishery. Therefore, coastwide, 382.3 mt would be available in the period beginning June 1 and ending August 31; 191.2 mt would be available in the period beginning September 1 and ending September 30; and 63.7 mt would be available in the period beginning October 1 and ending December 31, 2001.

In addition to time period subquotas, NMFS also has implemented General category RFDs to extend the fishing season throughout the summer and fall. The RFDs are consistent with the objectives of the HMS FMP and are designed to address the same issues addressed by time-period subquotas. For the 2002 fishing year, NMFS proposes a schedule of RFDs that is similar to that implemented in 2001, adjusted as necessary to coordinate with Japanese market holidays.

As proposed, persons aboard vessels permitted in the General category would be prohibited from fishing, including tag-and-release, for BFT of all sizes on the following days: August 10, 11, and 12; September 1, 2, 4, 8, 9, 11, 15, 16, 18, 22, 23, 25, 29, and 30; October 2, 6, 7, and 9. These proposed RFDs would improve distribution of fishing opportunities without increasing BFT mortality.

Public Hearings and Special Accommodations

The public is reminded that NMFS expects participants at the public hearings to conduct themselves appropriately. At the beginning of each public hearing, a NMFS representative will explain the ground rules (e.g., alcohol is prohibited from the hearing room; attendees will be called to give their comments in the order in which they registered to speak; each attendee will have an equal amount of time to speak; and attendees should not interrupt one another). The NMFS representative will attempt to structure the hearing so that all attending members of the public will be able to comment, if they so choose, regardless of the controversial nature of the subject(s). Attendees are expected to respect the ground rules, and, if they do not, they will be asked to leave the hearing.

The public hearing sites are physically accessible to people with disabilities. Requests for sign language interpretation or other auxiliary aids should be directed to Brad McHale (see **FOR FURTHER INFORMATION CONTACT**) at least 7 days prior to the hearing.

Classification

These proposed specifications and effort controls are published under the authority of the Magnuson-Stevens Act, 16 U.S.C. 1801 *et seq.*, and the Atlantic Tunas Convention Act, 16 U.S.C. 971 *et seq*. Preliminarily, the AA has determined that the proposed specifications and the effort controls are consistent with the HMS FMP, the Magnuson-Stevens Act, and the 1998 ICCAT BFT catch recommendation.

The Chief Counsel for Regulation of the Department of Commerce has certified to the Chief Counsel for Advocacy of the Small Business Administration that the proposed specifications and effort controls would not have a significant economic impact on a substantial number of small entities as follows:

The current level of participation in the Atlantic BFT fisheries has remained relatively consistent over the last couple of years since the HMS FMP was finalized. For instance, in 2001 there were 22,289 vessels that possessed either an Atlantic tunas permit or a HMS CHB permit. In 2000 and in 1999 there were 24,845 and 23,005 vessel permits respectively. The number of Atlantic tunas permit holders in each quota category has also remained relatively consistent since the HMS FMP was finalized. For example, in 2000 there were 9,468 vessels that possessed either a General category Atlantic tunas permit or a HMS Charter/Headboat permit, in 2001 there were 9,332 vessels permitted in either the General category Atlantic tunas permit or the HMS Charter/Headboat permit category. The similarity in number of vessels participating in a particular quota category from year to year holds true for the remaining category types (Angling, Longline, Harpoon, Purse Seine, and Trap) as well. In addition, according to the 2002 SAFE report, the value of the BFT fishery has increased from $17,488,624 in 1996 to $18,810,704 in 2000.

Due to the fact that the value of the BFT fishery is increasing, the overall U.S. Atlantic baseline BFT quota has not changed, the domestic breakdown of the U.S. Atlantic baseline BFT quota has not changed, and the level of participation in the U.S. Atlantic BFT fishery has remained relatively consistent since the original economic analyses were conducted in the HMS FMP, as reflected more recently in the 2002 SAFE report, NMFS has determined the Proposed Initial 2002 Quota Specifications and General Category Effort Controls, if implemented, would not have a significant economic

impact on a substantial number of small entities.

As mentioned above, NMFS has certified to the Small Business Administration that the proposed rule is not significant. As a result of this certification, an Initial Regulatory Flexibility Analysis was not prepared for this action.

Because of this certification, an Initial Regulatory Flexibility Analysis was not prepared.

These proposed quota specifications and General category effort controls have been determined to be not significant for purposes of Executive Order 12866.

On September 7, 2000, NMFS reinitiated formal consultation for all HMS commercial fisheries under section 7 of the Endangered Species Act. A Biological Opinion (BiOp) issued June 14, 2001, concluded that continued operation of the Atlantic pelagic longline fishery is likely to jeopardize the continued existence of endangered and threatened sea turtle species under NMFS jurisdiction. NMFS is currently implementing the reasonable and prudent alternative required by the BiOp. These proposed quota specifications and effort controls would not have any additional impact on sea turtles as these actions would not likely increase or decrease pelagic longline effort, nor are they expected to shift effort into other fishing areas. No irreversible or irretrievable commitments of resources are expected from this proposed action that would have the effect of foreclosing the implementation of the requirements of the BiOp.

The area in which this proposed action is planned has been identified as EFH for species managed by the New England Fishery Management Council, the Mid-Atlantic Fishery Management Council, the South Atlantic Fishery Management Council, the Gulf of Mexico Fishery Management Council, the Caribbean Fishery Management Council, and the Highly Migratory Species Division of the Office of Sustainable Fisheries at NMFS. It is not anticipated that this action will have any adverse impacts to EFH and, therefore, no consultation is required.

Dated: June 24, 2002.

William T. Hogarth,

Assistant Administrator for Fisheries, National Marine Fisheries Service.

[FR Doc. 02–16264 Filed 6–24–02; 3:07 pm]

BILLING CODE 3510–22–S

Notices

Federal Register

Vol. 67, No. 124

Thursday, June 27, 2002

This section of the FEDERAL REGISTER contains documents other than rules or proposed rules that are applicable to the public. Notices of hearings and investigations, committee meetings, agency decisions and rulings, delegations of authority, filing of petitions and applications and agency statements of organization and functions are examples of documents appearing in this section.

DEPARTMENT OF AGRICULTURE

Submission for OMB Review; Comment Request

June 21, 2002.

The Department of Agriculture has submitted the following information collection requirement(s) to OMB for review and clearance under the Paperwork Reduction Act of 1995, Public law 104–13. Comments regarding (a) whether the collection of information is necessary for the proper performance of the functions of the agency, including whether the information will have practical utility; (b) the accuracy of the agency's estimate of burden including the validity of the methodology and assumptions used; (c) ways to enhance the quality, utility and clarity of the information to be collected; (d) ways to minimize the burden of the collection of information on those who are to respond, including through the use of appropriate automated, electronic, mechanical, or other technological collection techniques or other forms of information technology should be addressed to: Desk Officer for Agriculture, Office of Information and Regulatory Affairs, Office of Management and Budget (OMB), Washington, DC 20503 *and* to Departmental Clearance Office, USDA, OCIO, Mail Stop 7602, Washington, DC 20250–7602. Comments regarding these information collections are best assured of having their full effect if received within 30 days of this notification. Copies of the submission(s) may be obtained by calling (202) 720–6746.

An agency may not conduct or sponsor a collection of information unless the collection of information displays a currently valid OMB control number and the agency informs potential persons who are to respond to the collection of information that such persons are not required to respond to the collection of information unless it displays a currently valid OMB control number.

Farm Service Agency

Title: Storage of Honey Forfeited to CCC by Honey Producers.

OMB Control Number: 0560–0216.

Summary of Collection: Public Law 80–806, the Commodity Credit Corporation (CCC) Charter Act, authorizes CCC to enter into storage contracts with commercial warehouse operators. The Act permits CCC to enter into various types of contracts as are necessary in the conduct of its business and directs CCC to utilize the usual and customary channels, facilities and arrangements of trade and commerce in its functions of purchasing, warehousing, transporting, processing, or handling of agricultural commodities. The CCC must maintain a List of Approved Warehouses to store CCC owned or loan honey. The use of warehouses on this list reduces the risk of loss faced by CCC by using only those facilities that meet the financial, physical, and managerial requirements of CCC and have met the Standards of Approval of Dry and Cold Storage Warehouses Processed Agricultural Commodities, Extracted Honey, and Bulk Oils. The purpose of requiring warehouses to meet the Standards for Approval is to assure that CCC-owned or loan honey is stored and handled by qualified warehouse operators with the necessary financial resources and managerial skills. The Farm Service Agency (FSA) will collect information using several forms.

Need and Use of the Information: FSA will collect information that will allow CCC to contract for warehouse storage and related services and to monitor and enforce all honey provisions of 7 CFR Part 1423. The information is also required to establish and maintain the Approved List, follow accepted warehousing practices, and represent the minimum burden to carry out various mandatory price support programs.

Description of Respondents: Business or other for-profit.

Number of Respondents: 75.

Frequency of Responses: Recordkeeping; Reporting: On occasion.

Total Burden Hours: 2,539.

Animal and Plant Health Inspection Service

Title: Application for Inspection and Certification of Animal Byproducts.

OMB Control Number: 0579–0008.

Summary of Collection: The Animal and Plant Health Inspection Service (APHIS) on behalf of the Secretary of Agriculture has been delegated the authority (7 U.S.C. 1622, 1624) to establish and implement a system for verifying that the importation and commercial distribution of certain animal byproducts have been processed according to the condition and requirements of the importing country. The laws and regulations that govern the importation and commercial distribution of certain animal byproducts in some foreign countries may require the U.S. exporter to furnish certificates that have been issued or endorsed by APHIS' Veterinary Service. These certificates attest to the class and quality of these products, and also attest to the procedures used to process these products for exportation to the receiving country. APHIS will collect information using VS Form 16–24, ''Application for Inspection and Certification of Animal Byproducts.''

Need and Use of the Information: APHIS collects information from applicants requesting that APHIS monitor the processing of the product. After monitoring the processing technique, APHIS certifies that the product was processed according to the conditions and requirements of the importing country. A copy of the form then accompanies the shipment. Without this certification, the importing country would not accept the product, and the applicant would be unable to conduct business with that country.

Description of Respondents: Business or other for-profit.

Number of Respondents: 20.

Frequency of Responses: Reporting: On occasion.

Total Burden Hours: 10.

Animal and Plant Health Inspection Service

Title: User Fee Regulation, 7 CFR part 354 and 9 CFR part 130.

OMB Control Number: 0579–0094.

Summary of Collection: The Food, Agriculture, Conservation and Trade Act of 1990, authorizes the Secretary of Agriculture and the Animal and Plant Health Inspection Service (APHIS) to

prescribe and collect fees to cover the cost of providing certain Agricultural Quarantine and Inspection (AQI) services. The Act gives the Secretary the authority to charge for the inspection of international passengers, commercial vessels, trucks, aircraft, and railroad cars, and to recover the costs of providing the inspection of plants and plant products offered for export. The Secretary is authorized to use the revenue to provide reimbursements to any appropriation accounts that incur costs associated with the AQI services provided. APHIS will collect information using several APHIS forms.

Need and Use of the Information: APHIS collects information, which includes the taxpayer identification number, name, and address and telephone number to collect fees. The procedures and the information requested for the passengers and aircrafts are used to ensure that the correct users fees are collected and remitted in full in a timely manner. Without the information from the respondents, APHIS would not be able to ensure substantial compliance with the statute. Noncompliance with the statute could result in misappropriation of public funds and lost revenue to the Federal Government.

Description of Respondents: Business or other for-profit; Not-for-profit institutions; Individuals or households; Federal Government; State, Local or Tribal Government.

Number of Respondents: 88,453.

Frequency of Response: Recordkeeping; Reporting: On occasion.

Total Burden Hours: 7,640.

Animal and Plant Health Inspection Service

Title: Animal Welfare, 9 CFR part 3, Marine Mammals.

OMB Control Number: 0579–0115.

Summary of Collection: The Laboratory Animal Welfare Act (AWA). (Public Law 89–544) enacted August 24, 1966, and amended December 24, 1970 (Public Law 91–579); April 22, 1976 (Public Law 94–279); and December 23, 1985 (Public Law 99–198) requires the U.S. Department of Agriculture (USDA) to regulate the humane care and handling of most warm-blooded animals, including marine mammals, used for research or exhibition purposes, sold as pets, or transported in commerce. This legislation and its amendments were the result of extensive demand by organized animal welfare groups and private citizens requesting a Federal law to protect such animals. USDA, Animal and Plant Health Inspection Service (APHIS), Animal Care (AC) has the responsibility to enforce the Animal Welfare Act and the provisions of 9 CFR, Chapter 1, Subchapter A, which implements the Animal Welfare Act. APHIS will collect information through the use of reports and records that are kept for a period of at least one year to ensure that the animals are cared for in the prescribed manner that is required by regulations.

Need and Use of the Information: APHIS will collect information on the review and evaluation of program compliance by regulated facilities, and provide a workable enforcement system to carry out the requirements of the AWA, and the intent of Congress, on a practical daily basis without resorting to more detailed and stringent regulations and standards which could be more burdensome to regulated facilities.

Description of Respondents: Business or other for-profit; Not-for-profit institutions.

Number of Respondents: 3,190.

Frequency of Responses: Recordkeeping; Reporting: On occasion; Semi-annually.

Total Burden Hours: 15,607.

Agricultural Marketing Service

Title: Plan for Estimating Daily Livestock Slaughter Under Federal Inspection.

OMB Control Number: 0581–0050.

Summary of Collection: The Agriculture Marketing Act of 1946 (7 U.S.C. 1621) Section 203(g), directs and authorizes the collection and dissemination of marketing information including adequate outlook information, on a market area basis, for the purpose of anticipating and meeting consumer requirements aiding in the maintenance of farm income and to bring about a balance between production and utilization. Livestock and Grain News provides a timely exchange of accurate and unbiased information on a current marketing conditions (supply, demand, prices, trends, movement, and other information) affecting trade in livestock, meats, grain, and wool. Administered by the U.S. Department of Agriculture's Agricultural Marketing Service (AMS), this nationwide market news program is conducted in cooperation with approximately 30 State departments of agriculture. The up-to-the minute reports collected and disseminated by professional market reporters are intended to provide both buyers and sellers with the information necessary for making intelligent, informed marketing decisions, thus putting everyone in the marketing system in an equal bargaining position.

Need and Use of the Information: AMS will collect information on estimation of the current day's slaughter at their plant(s) and the actual slaughter of the previous day. The report is used to make market outlook projections and maintain statistical data. The information must be collected and disseminated by an impartial third party. Since the government is a large purchaser of meat, a system to monitor the collection and reporting of data is needed. Collecting this information less frequently would hinder the timely use of this data.

Description of Respondents: Business or other for-profit; Individuals or households; Farms; Federal Government; State, Local or Tribal Government.

Number of Respondents: 72.

Frequency of Responses: Reporting; Weekly; Other: Daily.

Total Burden Hours: 624.

Sondra A. Blakey,

Departmental Information Clearance Officer.

[FR Doc. 02–16171 Filed 6–26–02; 8:45 am]

BILLING CODE 3410–01–M

DEPARTMENT OF AGRICULTURE

Food Safety and Inspection Service

[Docket No. 01–039N2]

Notice of Request for New Information Collection Regarding Consumer Practices, Concerns, and Awareness Specific to Meat, Poultry, and Egg Products

AGENCY: Food Safety and Inspection Service, USDA.

ACTION: Notice and request for comments.

SUMMARY: In accordance with the Paperwork Reduction Act of 1995 and the Office of Management and Budget (OMB) regulations, this notice announces the Food Safety and Inspection Service's (FSIS) intention to request information collection regarding consumer food safety practices, concerns, and awareness, specific to meat, poultry, and egg products. Also, in this same issue of the **Federal Register**, FSIS is publishing a notice of request for new information collection regarding industry practices specific to meat, poultry, and egg products.

DATES: Comments on this notice must be received on or before August 26, 2002.

ADDITIONAL INFORMATION OR COMMENTS: Contact Lee Puricelli, Paperwork Specialist, Food Safety and Inspection Service, USDA, 300 12th Street, SW., Room 109, Washington, DC 20250–3700, (202) 720–0346.

SUPPLEMENTARY INFORMATION:

Title: Consumer Data to Support Risk Assessments, Regulation Development, and Food Safety Education Initiatives.

Expiration Date of Approval: 3 years.

Type of Request: Regular.

Abstract: FSIS has been delegated the authority to exercise the functions of the Secretary as provided in the Federal Meat Inspection Act (FMIA) (21 U.S.C. 601 *et seq.*), the Poultry Products Inspection Act (PPIA) (21 U.S.C. 451, *et seq.*), and the Egg Products Inspection Act (EPIA) (21 U.S.C. 1031–1056). These statutes provide that FSIS is to protect the public by ensuring that meat, poultry, and egg products are safe, wholesome, unadulterated, and properly labeled and packaged.

To accomplish this objective, several program areas within FSIS need consumer data. The Office of Public Health and Science (OPHS) needs consumer behavior data for food safety risk assessments. The Office of Policy, Program Development, and Evaluation (OPPDE) needs data on consumer practices and expectations for regulatory impact analyses and policy development. The Food Safety Education and Communications Staff needs data on consumer knowledge and behavior to identify food safety education needs and to develop and evaluate educational campaigns. Since FSIS now works in a risk analysis policy framework, the timeliness and comprehensiveness of consumer data is increasingly important to achieve the Agency goal of protecting the public health by significantly reducing the prevalence of foodborne hazards from meat, poultry, and egg products.

To meet the Agency's need for timely consumer data related to meat, poultry, and egg products, FSIS has considered three options: (1) Depending on other recurring government surveys, (2) conducting surveys via the Internet, and (3) conducting probability web-enabled panel surveys. The first option, adding questions to other recurring government surveys, is not feasible because FSIS requires specific consumer data obtained in a timely manner. These surveys usually occur only periodically and limit the content and quantity of questions that FSIS may add. The second option, Internet surveys, does not provide statistically valid results that are representative of the U.S. population. The third option, web-enabled panel surveys, is the best option because it has the speed of Internet surveys, but, unlike Internet surveys, it is based on true probability sampling and is a research method that produces reliable information for decision-making.

FSIS is requesting OMB approval of a new Information Collection Request to conduct consumer surveys that use the web-enabled panel survey methodology. Specifically, the initial survey will include questions on:

- How consumers store, handle, and prepare specific meat, poultry, and egg products;
- How well consumers understand and follow the 4 Fight BAC!™ food safety messages and other safe food handling instructions;
- Consumers' expectations and concerns regarding labeling; and
- Consumers' awareness of food safety rules related to residues.

Estimate of Burden: The public reporting burden for this collection of information is estimated to average .25 hours (15 minutes) per response.

Respondents: Adult household food preparers in the United States who prepare meat or poultry products at least three times a week.

Estimated Number of Respondents: 2400.

Estimated Number of Responses per Respondent: 1.

Estimated Total Annual Burden on Respondents: 600 hours.

Copies of this information collection assessment can be obtained from Lee Puricelli. *See* **ADDITIONAL INFORMATION OR COMMENTS.**

Comments are invited on: (a) Whether the proposed collection of information is necessary for the proper performance of FSIS' functions, including whether the information will have practical utility; (b) the accuracy of FSIS' estimate of the burden of the proposed collection of information, including the validity of the methodology and assumptions used; (c) ways to enhance the quality, utility, and clarity of the information to be collected; and (d) ways to minimize the burden of the collection of information on those who are to respond, including through use of appropriate automated, electronic, mechanical, or other technological collection techniques, or other forms of information technology. Comments may be sent to both Lee Puricelli at the address provided above, and the Desk Officer for Agriculture, Office of Information and Regulatory Affairs, Office of Management and Budget, Washington, DC 20253.

All responses to this notice will be summarized and included in the request for OMB approval. All comments will also become a matter of public record.

Additional Public Notification

Public awareness of all segments of rulemaking and policy development is important. Consequently, in an effort to better ensure that minorities, women, and persons with disabilities are aware of this notice, FSIS will announce it and make copies of this **Federal Register** publication available through the FSIS Constituent Update. FSIS provides a weekly Constituent Update, which is communicated via Listserv, a free e-mail subscription service. In addition, the update is available on-line through the FSIS web page located at *http://www.fsis.usda.gov.* The update is used to provide information regarding FSIS policies, procedures, regulations, **Federal Register** notices, FSIS public meetings, recalls, and any other types of information that could effect or would be of interest to our constituents/stakeholders. The constituent Listserv consists of industry, trade, and farm groups, consumer interest groups, allied health professionals, scientific professionals, and other individuals that have requested to be included. Through the Listserv and web page, FSIS is able to provide information to a much broader, more diverse audience.

For more information contact the Congressional and Public Affairs Office, at (202) 720–9113. To be added to the free e-mail subscription service (Listserv) go to the ''Constituent Update'' page on the FSIS web site at *http://www.fsis.usda.gov/oa/update/update.htm.* Click on the ''Subscribe to the Constituent Update Listserv'' link, then fill out and submit the form.

Done at Washington, DC, on: May 31, 2002.

William J. Hudnall,

Acting Administrator.

[FR Doc. 02–16193 Filed 6–26–02; 8:45 am]

BILLING CODE 3410–DM–P

DEPARTMENT OF AGRICULTURE

Food Safety and Inspection Service

[Docket No. 01–039N]

Notice of Request for New Information Collection Regarding Industry Practices

AGENCY: Food Safety and Inspection Service, USDA.

ACTION: Notice and request for comments.

SUMMARY: In accordance with the Paperwork Reduction Act of 1995 and the Office of Management and Budget (OMB) regulations, this notice announces the intention of Food Safety and Inspection Service (FSIS) to request information collection regarding industry practices specific to meat, poultry, and egg products. Also, in this same issue of the **Federal Register** FSIS is publishing a notice of request for new

information collection regarding consumer practices, concerns, and awareness, specific to meat, poultry, and egg products.

DATES: Comments on this notice must be received on or before August 26, 2002.

ADDITIONAL INFORMATION OR COMMENTS: Contact Lee Puricelli, Paperwork Specialist, Food Safety and Inspection Service, USDA, 300 12th Street, SW, Room 109, Washington, DC 20250–3700, (202) 720–0346.

SUPPLEMENTARY INFORMATION:

Title: Industry Stakeholder Survey.

Expiration Date of Approval: 3 years.

Type of Request: Regular.

Abstract: FSIS has been delegated the authority to exercise the functions of the Secretary as provided in the Federal Meat Inspection Act (FMIA) (21 U.S.C. 601 *et seq.*), the Poultry Products Inspection Act (PPIA) (21 U.S.C. 451, *et seq.*), and the Egg Products Inspection Act (EPIA) (21 U.S.C. 1031–1056). These statutes provide that FSIS is to protect the public by ensuring that meat, poultry, and egg products are safe, wholesome, unadulterated, and properly labeled and packaged.

Executive Order 12866, the Regulatory Flexibility Act (RFA), and the Small Business Regulatory Enforcement Fairness Act of 1996 (SBREFA) direct Federal agencies to conduct regulatory impact analysis, and to consider flexible regulatory approaches. In order to perform these mandatory analyses it is often necessary to survey regulated industry to determine existing practices, and the changes in those practices, likely under various policy options.

FSIS is seeking OMB clearance to conduct surveys to implement Executive Order 12866, RFA, and SBREFA. Participation in the surveys will be voluntary. FSIS will use the information gathered from these surveys to identify current business practices. FSIS projects 1 survey per year, with a sample of about 200 to 1,000 respondents for each mail survey. FSIS will target the questions to the appropriate sample population to reduce response burden.

Estimate of Burden: The public reporting burden for this collection of information is estimated to average ½ hour per response.

Respondents: regulated industry, health and science professionals, consumers.

Estimated Number of Respondents: 3000.

Estimated Number of Responses per Respondent: 1.

Estimated Total Annual Burden on Respondents: 1500 hours.

Copies of this information collection assessment can be obtained from Lee Puricelli. See **ADDITIONAL INFORMATION OR COMMENTS.**

Comments are invited on: (a) Whether the proposed collection of information is necessary for the proper performance of FSIS' functions, including whether the information will have practical utility; (b) the accuracy of FSIS' estimate of the burden of the proposed collection of information, including the validity of the methodology and assumptions used; (c) ways to enhance the quality, utility, and clarity of the information to be collected; and (d) ways to minimize the burden of the collection of information on those who are to respond, including thorough use of appropriate automated, electronic, mechanical, or other technological collection techniques, or other forms of information technology. Comments may be sent to both Lee Puricelli at the address provided above, and the Desk Officer for Agriculture, Office of Information and Regulatory Affairs, Office of Management and Budget, Washington, DC 20253.

All responses to this notice will be summarized and included in the request for OMB approval. All comments will also become a matter of public record.

Additional Public Notification

Public awareness of all segments of rulemaking and policy development is important. Consequently, in an effort to better ensure that minorities, women, and persons with disabilities are aware of this notice, FSIS will announce it and make copies of this **Federal Register** publication available through the FSIS Constituent Update. FSIS provides a weekly Constituent Update, which is communicated via Listserv, a free e-mail subscription service. In addition, the update is available on-line through the FSIS web page located at *http://www.fsis.usda.gov.* The update is used to provide information regarding FSIS policies, procedures, regulations, **Federal Register** notices, FSIS public meetings, recalls, and any other types of information that could effect or would be of interest to our constituents/stakeholders. The constituent Listserv consists of industry, trade, and farm groups, consumer interest groups, allied health professionals, scientific professionals, and other individuals that have requested to be included. Through the Listerv and web page, FSIS is able to provide information to a much broader, more diverse audience.

For more information contact the Congressional and Public Affairs Office, at (202) 720–9113. To be added to the free e-mail subscription service (Listserv) go to the ''Constituent Update'' page on the FSIS web site at *http://www.fsis.usda.gov/oa/update/update.htm.* Click on the ''Subscribe to the Constituent Update Listserv'' link, then fill out and submit the form.

Done at Washington DC, on May 31, 2002.

William J. Hudnall,

Acting Administrator.

[FR Doc. 02–16194 Filed 6–26–02; 8:45 am]

BILLING CODE 3410–DM–P

DEPARTMENT OF AGRICULTURE

Forest Service

Manti-La Sal National Forest, Utah Oak Creek Ridge Aspen Project

AGENCY: Forest Service, USDA.

ACTION: Notice of intent to prepare an environmental impact statement.

SUMMARY: The Forest Service will prepare an Environmental Impact Statement (EIS) to document the analysis and disclose the environmental impacts of proposed actions to:

1. Harvest approximately 1 MMBF of aspen/mixed conifer on approximately 125 acres. Burning of slash concentrations and fencing will follow treatment.

2. Chainsaw fell conifers on approximately 75 acres of existing young aspen stands.

3. Reconstruction (culvert replacement) of approximately 2.5 miles FDR 138.

DATES: Comments concerning the scope of the analysis must be received by August 1, 2002. The draft environmental impact statement is expected October 2002 and the final environmental impact statement is expected March 2003.

ADDRESSES: Send written comments to: Diane M. Cote, Sanpete Ranger District, Manti-LaSal National Forest, 540 North Main, Emphraim, Utah 84627, *dcote@fs.fed.us.*

For further information, mail correspondence to: Diane M. Cote, Sanpete Ranger District, Manti-LaSal National Forest, 540 North Main, Ephraim, Utah 84627, *dcote@fs.fed.us.*

FOR FURTHER INFORMATION CONTACT: See above addresses:

SUPPLEMENTARY INFORMATION: The Oak Ridge Project area includes portions of the Oak Creek and Dry Creek. These areas are managed as Range (RNG) under the Manti-La Sal National Forest Land and Resource Management Plan (USDA, 1986).

The project area encompasses approximately 615 total acres. The project area contains about 463 acres of

aspen and aspen/mixed conifer types that could be silviculturally treated to provide a more diverse ecosystem. Drainages within the project area include Dry and Oak Creek. The Oak Creek Inventories Roadless Area is within and adjacent to the project area. Approximately 125 acres of the proposed treatments are within the Oak Creek Inventoried Roadless Area.

Forest development road (FDR) 50138 provides access through the area and to a parcel of state owned land. The proposed treatment units are adjacent to this road. This proposal has been developed through consultation with Forest Service specialists, and other individuals and agencies with interest in the resources of the area.

Purpose and Need for Action

Purpose #1—Move towards restoration of the ecological structure, function, processes, and composition of the aspen component of the landscape.

Need: Eighty-three percent of the aspen/mixed conifer stands (463 acres) in the Oak Creek Ridge Project Area are in a mid-aged to mature condition, the other 75 acres is in a young structural stage. Conifers are encroaching in these aspen stands and crowding the shade-intolerant aspen. Fire exclusion and lack of any alternate regeneration treatment over the past 100 years has caused the decline of these stands and changed the distribution of the structural stages. Converting the mature aspen/mixed conifer stands to a seedling/sapling structure will move the project area closer to the desired future condition discussed in the NFMA (National Forest Management Act) analysis.

Proposed Action

1. Harvest approximately 1 MMBF of aspen/mixed conifer on approximately 125 acres. Burning of slash concentrations and fencing will follow treatment.
2. Chainsaw fell conifers on approximately 75 acres of existing young aspen stands.
3. Reconstruction (culvert replacement) of approximately 2.5 miles FDR (Forest Development Road) 138.

Possible Alternatives

No additional alternatives other than ''No Action'' have been identified at this time.

Responsible Official

The Forest Supervisor, Elaine Zieroth is the responsible official for this project. The Forest Supervisor's office of the Manti-La Sal National Forest is located at 599 West Price River Drive, Price, Utah 84501, phone: 435–637–2817.

Nature of Decision To Be Made

The Forest Supervisor of the Manti-LaSal must decide whether to conduct vegetation management activities now or to defer management until a later time.

If she decides to apply vegetation management activities now, she must decide the following specific management activities:

- Which acres to treat
- What, if any, acres to treat with harvest
- What, if any, acres to treat with conifer removal
- What mitigation and/or monitoring measures to implement to meet Forest standards and minimize resource damage
- Whether to close roads not needed for resource management.

Scoping Process

Agency representatives and other interested people are invited to visit with Forest Service officials at any time during the EIS process. Two specific time periods are identified for the receipt of formal comments on the analysis. The two comment periods are: (1) During the scoping process, the next 30 days following publication of this notice in the **Federal Register**, and (2) During the formal review period of the Draft EIS. The comment period on the draft environmental impact statement will be 45 days from the date the Environmental Protection Agency publishes the notice of availability in the **Federal Register**.

Preliminary Issues

Possible impacts to the Oak Creek Inventoried roadless Area if the project is implemented as stated in the proposed action.

Comment Request

This notice of intent initiates the scoping process which guides the development of the environmental impact statement.

Early Notice of Importance of Public Participation in Subsequent Environmental Review: A draft environmental impact statement will be prepared for comment. The comment period on the draft environmental impact statement will be 45 days from the date the Environmental Protection Agency publishes the notice of availability in the **Federal Register**.

The Forest Service believes, at this early stage, it is important to give reviewers notice of several court rulings related to public participation in the environmental review process. First, reviewers of draft environmental impact statements must structure their participation in the environmental review of the proposal so that it is meaningful and alerts an agency to the reviewer's position and contentions. *Vermont Yankee Nuclear Power Corp.* v. *NRDC,* 435 U.S. 519, 553 (1978). Also, environmental objections that could be raised at the draft environmental impact statement stage but that are not raised until after completion of the final environmental impact statement may be waived or dismissed by the courts. *City of Angoon* v. *Hodel,* 803 F.2d 1016, 1022 (9th Cir. 1986) and *Wisconsin Heritages, Inc.* v. *Harris,* 490 F. Supp. 1334, 1338 (E.D. Wis. 1980). Because of these court rulings, it is very important that those interested in this proposed action participate by the close of the August 10, 2002 comment period so that substantive comments and objections are made available to the Forest Service at a time when it can meaningfully consider them and respond to them in the final environmental impact statement.

To assist the Forest Service in identifying and considering issues and concerns on the proposed action, comments on the draft environmental impact statement should be as specific as possible. It is also helpful if comments refer to specific pages or chapters of the draft statement. Comments may also address the adequacy of the draft environmental impact statement or the merits of the alternatives formulated and discussed in the statement. Reviewers may wish to refer to the Council on Environmental Quality Regulations for implementing the procedural provisions of the National Environmental Policy Act at 40 CFR 1503.3 in addressing these points.

(**Authority:** 40 CFR 1501.7 and 1508.22; Forest Service Handbook 1909.15, Section 21).

Dated: June 21, 2002.

Elaine J. Zieroth,

Forest Supervisor.

[FR Doc. 02–16228 Filed 6–27–02; 8:45 am]

BILLING CODE 3410–11–M

DEPARTMENT OF AGRICULTURE

Forest Service

Juncrock Timber Sale, Mt. Hood National Forest, Wasco County, OR

AGENCY: Forest Service, USDA.

ACTION: Notice of intent to prepare an environmental impact statement.

SUMMARY: The Forest Service, USDA, will prepare an environmental impact statement (EIS) on a proposal to improve forest health on approximately 550 acres of land, using commercial thinning and individual tree selection treatments, and to reconstruct approximately 1.5 miles, and close approximately 22 miles of roads within the planning area. The proposed action will be in compliance with the 1990 Mt. Hood National Forest Land and Resource Management Plan (Forest Plan) as amended by the Northwest Forest Plan, which establishes the overall goals and guidelines for management of this area. The proposed action is within the White River watershed on the Barlow Ranger District. It is scheduled for implementation in fiscal years 2003 and 2004. The Mt. Hood National Forest invites written comments and suggestions on the scope of the analysis. The agency will give notice of the full environmental analysis and decision-making process so interested and affected people may be able to participate and contribute in the final decision.

DATES: Comments concerning the scope of the analysis should be postmarked by July 31, 2002.

ADDRESSES: Send written comments and suggestions concerning the proposed action in this area to Becky Nelson, NEPA Coordinator, 780 N.E. Court Street, Dufur, Oregon (phone: 541–467–2291). Comments may also be sent by FAX (541–467–2271). Include your name and mailing address with your comments so documents pertaining to this project may be mailed to you.

FOR FURTHER INFORMATION CONTACT: Questions about the proposed action and EIS should be directed to Becky Nelson (address and phone number listed above), or to Mike Redmond, Environmental Coordination, 16400 Champion Way, Sandy, Oregon 97055–7248 (phone: 503–668–1776).

SUPPLEMENTARY INFORMATION: The proposed action would promote forest health by removing trees that are dead, or affected by insects, disease, overstocking, or defects on approximately 550 acres. This treatment would help reach the goal of creating multi-storied, disease resistant, stands in this area.

Existing roads would be extended approximately 0.5 miles where access is needed. A total of 4 roads would be reconstructed for approximately 1 mile. Approximately 9 miles of wildlife closures would occur on 18 roads. Two segments of roads would be decommissioned for about 1 mile. Approximately 12 miles of roads not needed for future management would be closed.

The planning area is located approximately 38 miles south of Hood River, Oregon in portions of Sections 1, 12, & 13, of T.5 S., R.9 E., and portions of Sections 3, 4, 5, 6, 7, 8, 9, 10, 17, & 18, of T.5 S., R. 10 E., Willamette Meridian, Wasco County, Oregon. The planning area does not include any wilderness, RARE II inventoried roadless, or other unroaded areas. It is outside the White River Wild and Scenic River corridor as identified in the ''White River Wild and Scenic River Plan.'' The planning area is immediately adjacent to the White River late successional reserve (LSR). The planning area is identified as a Tier 2 Key Watershed in the Northwest Forest Plan. The Juncrock Timber Sale is included in the C–1, Timber Emphasis allocation, and the B–2, Scenic Viewshed allocation, of the Forest Plan.

Two preliminary issues have been identified; the impacts from removing mature and over-mature trees, and the impacts from extending existing roads. This analysis will evaluate a range of alternatives for implementation of the project activities including a no-action alternative.

Since the summer issue of 1998, the Juncrock Planning Area has been identified in ''Sprouts'', the Mt. Hood National Forest quarterly publication that lists upcoming proposed projects. There have been two field trips with interested public groups. Future scoping will include continued inclusion in ''Sprouts'', and continued identification and clarification of issues, identification of key issues to be analyzed in depth, and identification of potential environmental effects of the proposed action and alternatives.

The Forest Service believes, at this early stage, it is important to give reviewers notice of several court rulings related to public participation in the environmental review process. First, reviewers of draft EIS must structure their participation in the environmental review of the proposal so that it is meaningful and alerts an agency to the reviewer's position and contentions. *Vermont Yankee Nuclear Power Corp.* v. *NRDC,* 435 U.S. 519, 553 (1978). Also, environmental objections that could be raised at the draft EIS stage but are not raised until after completion of the final EIS may be waived or dismissed by the courts. *City of Angoon* v. *Hodel,* 803 F.2d 1016, 1022 (9th Cir. 1986) and *Wisconsin Heritages, Inc.* v. *Harris,* 490 F. Supp. 1334, 1338 (E.D. Wis. 1980). Because of these court rulings, it is very important that those interested in this proposed action participate by the close of the 45-day comment period so that substantive comments and objections are made available to the Forest Service at a time when it can meaningfully consider them and respond to them in the final EIS.

To assist the Forest Service in identifying and considering issues and concerns on the proposed action, comments on the draft EIS should be as specific as possible. It is also helpful if comments refer to specific pages or chapters of the draft EIS. Comments may also address the adequacy of the draft EIS or the merits of the alternatives formulated and discussed in the statement. Reviewers may wish to refer to the Council on Environmental Quality Regulations for implementing the procedural provisions of the National Environmental Policy Act at 40 CFR 1503.3 in addressing these points.

The draft EIS is planned to be filed with the Environmental Protection Agency (EPA) and available for public review in August 2002. At that time, copies of the draft EIS will be distributed to interested and affected agencies, organizations, Indian Tribes, and members of the public for their review and comment. The EPA will publish a Notice of Availability (NOA) of the draft EIS in **Federal Register**. The comment period on the draft EIS will be 45 days from the date the NOA appears in the **Federal Register**.

The Forest Service is seeking information, comments, and assistance from other agencies, organizations, Indian Tribes, and individuals who may be interested in or affected by the proposed action. Your comments are appreciated throughout the analysis process.

Comments received in response to this proposed action, including names and addresses of those who comment, will be considered part of the public record on this proposed action and will be available for public inspection. Comments submitted anonymously will be accepted and considered; however, those who submit anonymous comments will not have standing to appeal the subsequent decision under 36 CFR parts 214 or 217. Additionally, pursuant to 7 CFR 1.27(d), any person may request the agency to withhold a submission from the public record by showing how the Freedom of Information Act (FOIA) permits such confidentiality. Persons requesting such confidentiality should be aware that, under the FOIA, confidentiality may be granted in only very limited circumstances, such as to protect trade secrets. The Forest Service will inform the requestor of the agency's decision

regarding the request for confidentiality, and where the request is denied, the agency will return the submission and notify the requestor that the comments may be resubmitted with or without names and address within thirty days.

The final EIS is scheduled to be available by December 2002. In the final EIS, the Forest Service is required to respond to substantive comments received during the comment period for the draft EIS. The responsible official is Gary Larsen, Mt. Hood National Forest Supervisor. The responsible official will decide which, if any, of the alternatives will be implemented. The Juncrock Planning Area decision and rationale will be documented in a Record of Decision, which will be subject to Forest Service Appeal Regulations (36 CFR part 215).

Dated: June 20, 2002.

Kathryn J. Silverman,

Deputy Forest Supervisor.

[FR Doc. 02–16231 Filed 6–26–02; 8:45 am]

BILLING CODE 3410–11–M

DEPARTMENT OF AGRICULTURE

Forest Service

Siskiyou County Resource Advisory Committee

AGENCY: Forest Service, USDA.

ACTION: Notice of meeting.

SUMMARY: The Siskiyou County Resource Advisory Committee (RAC) will meet on July 15, 2002, in Yreka, California. The focus of this meeting will be to discuss the following topics: Approval of previous Meeting Minutes; second round of project proposals; outcome of the proponent assistance workshop held July 12th; County Supervisors' response to RAC presentation; CEQA/NEPA compliance requirements; merchantable materials sales; review of rating criteria and design for project evaluation; and a presentation on the noxious weed issue.

DATES: The meeting will be held July 15, 2002, from 4 p.m. to 7 p.m.

ADDRESSES: The meeting will be held at the Yreka High School Liberty, Preece Way, Yreka, California.

FOR FURTHER INFORMATION CONTACT: Nancy Gibson, Klamath National Forest USDA, 1312 Fairlane Road, Yreka, California, 96097, (530) 841–4412; E-MAIL *ngibson@fs.fed.us*

SUPPLEMENTARY INFORMATION: The meeting is open to the public. Public comment opportunity will be provided and individuals will have the opportunity to address the Committee at that time.

Dated: June 20, 2002.

Margaret J. Boland,

Forest Supervisor, Klamath National Forest.

[FR Doc. 02–16177 Filed 6–26–02; 8:45 am]

BILLING CODE 3410–11–M

DEPARTMENT OF AGRICULTURE

Forest Service

Madera County Resource Advisory Committee

AGENCY: Forest Service, USDA.

ACTION: Notice of Resource Advisory Committee Meeting.

SUMMARY: Pursuant to the authorities in the Federal Advisory Committee Act of 1972 (Public Law 92–463) and under the secure Rural Schools and Community Self-Determination Act of 2000 (Public Law 106–393) the Sierra National Forest's Resource Advisory Committee for Madera County will meet on Monday, July 15, 2002. The Madera Resource Advisory Committee will meet at the Forest Service Headquarters office, 57003 Road 225, North Fork, California 93643. The purpose of the meeting will be a field review of proposed projects in North Fork.

DATES: The Madera Resource Advisory Committee meeting will be held Monday, July 15, 2002. The meeting will be held from 7 p.m. to 9 p.m.

ADDRESSES: The Madera County RAC meeting will be held at the Forest Service Headquarters, 57003 Road 225, North Fork, CA 93643.

FOR FURTHER INFORMATION CONTACT: Dave Martin, U.S.D.A., Sierra National Forest, 57003 Road 225, North Fork, CA 93643, (559) 877–2218 ext. 3100; e-mail: *dmartin05@fs.fed.us.*

SUPPLEMENTARY INFORMATION: Agenda items to be covered include: (1) a field review of current proposed resource project proposal, (2) public comments. The meeting is open to the public. Public input opportunity will be provided and individuals will have the opportunity to address the Committee at that time.

Dated: June 21, 2002.

David W. Martin,

District Ranger.

[FR Doc. 02–16225 Filed 6–26–02; 8:45 am]

BILLING CODE 3410–11–M

DEPARTMENT OF COMMERCE

Economic Development Administration

Notice of Petitions by Producing Firms for Determination of Eligibility To Apply for Trade Adjustment Assistance

AGENCY: Economic Development Administration (EDA).

ACTION: To give all interested parties an opportunity to comment.

Petitions have been accepted for filing on the dates indicated from the firms listed below.

LIST OF PETITION ACTION BY TRADE ADJUSTMENT ASSISTANCE FOR PERIOD MAY 17, 2002–JUNE 19, 2002

Firm name	Address	Date petition accepted	Product
MJM International, Inc	2003 North I Road, San Juan, TX 78589	05/28/02	Medical furniture of PVC pipes and fabric.
Compton Wood Products, Inc	901Holley Drive, Martinsville, VA 24112	05/28/02	Furniture frames, moldings, panel doors, drawer slides, tables, etc. of wood.
Unico Foods, Inc	13006 Darrington Road, El Paso, Texas 79928.	05/28/02	Chorizo.
Inland Tool & Manufacturing Co	630 South 5th Street, Kansas City, KS 66105.	05/28/02	Industrial tooling and die fabrication.
Austro Mold, Inc	3 Rutter Street, Rochester, NY 14606	05/28/02	Injection or compression type molds for rubber or plastic for the manufacture of semiconductor devices.
Co-planar, Inc	100 Round Hill Drive, Rockaway, NJ 07866.	06/30/02	Metal lead frames, auto connectors and contacts and electric razor metal parts.
Catskill Craftsmen, Inc	15 West End Avenue, Stamford, NY 12167.	06/12/02	Kitchen workstations of wood.

LIST OF PETITION ACTION BY TRADE ADJUSTMENT ASSISTANCE FOR PERIOD MAY 17, 2002–JUNE 19, 2002—Continued

Firm name	Address	Date petition accepted	Product
R. J. Zeman Tool & Mfg. Co	W228 N575 W. Mound Dr., Waukesha, WI 53186.	06/13/02	Machined metal molds for injection molding of plastic and die casting of metal.
Circuits Engineering, Inc	1832 180th Street SE, Bothell, WA 98012	06/13/02	Printed circuit boards.
Douglas & Harper Manufacturing Co., Inc	1126 South Main Street, Baxley, GA 31515.	06/13/02	Textile based health care items, i.e. moist heat packs, halter traction devices, padded toilet seat risers, sanitary belts, lumbar support belts, etc.
Sussex Wire, Inc	4 Danforth Drive, Easton, PA 18045	06/14/02	Wire leads used in the semiconductor industry.
IKKA Technology, Inc	5 Barber, Industrial Court, Villa Rica, GA 30180.	06/14/02	Video cassette cases.
Plas-Tech Engineering, Inc	281 E. Sheridan, Springs Rd., Lake Geneva, WI 53147.	06/19/02	Injection molded plastic components for non-electric medical instruments.

The petitions were submitted pursuant to section 251 of the Trade Act of 1974 (19 U.S.C. 2341). Consequently, the United States Department of Commerce has initiated separate investigations to determine whether increased imports into the United States of articles like or directly competitive with those produced by each firm contributed importantly to total or partial separation of the firm's workers, or threat thereof, and to a decrease in sales or production of each petitioning firm.

Any party having a substantial interest in the proceedings may request a public hearing on the matter. A request for a hearing must be received by Trade Adjustment Assistance, Room 7315, Economic Development Administration, U.S. Department of Commerce, Washington, DC 20230, no later than the close of business of the tenth calendar day following the publication of this notice.

The Catalog of Federal Domestic Assistance official program number and title of the program under which these petitions are submitted is 11.313, Trade Adjustment Assistance.

Dated: June 21, 2002.

Anthony J. Meyer,

Coordinator, Trade Adjustment and Technical Assistance.

[FR Doc. 02–16229 Filed 6–26–02; 8:45 am]

BILLING CODE 3510–24–P

DEPARTMENT OF COMMERCE

International Trade Administration

[A–570–868]

Antidumping Duty Order: Folding Metal Tables and Chairs From the People's Republic of China

AGENCY: Import Administration, International Trade Administration, Department of Commerce.

ACTION: Notice of antidumping duty order.

EFFECTIVE DATE: June 27, 2002.

FOR FURTHER INFORMATION CONTACT: John Drury or Helen Kramer, Enforcement Group III, Office 8, Import Administration, International Trade Administration, U.S. Department of Commerce, 1401 Constitution Avenue, NW, Washington, DC 20230; telephone: (202) 482–0195 or (202) 482–0405, respectively.

Applicable Statute and Regulations

Unless otherwise indicated, all citations to the Tariff Act of 1930, as amended (''the Act''), are references to the provisions effective January 1, 1995, the effective date of the amendments made to the Act by the Uruguay Round Agreements Act. In addition, unless otherwise indicated, all citations to the Department's regulations are to the regulations at 19 CFR part 351 (2001).

SUPPLEMENTARY INFORMATION:

Background

On April 17, 2002, the Department issued its final determination in the antidumping duty investigation of folding metal tables and chairs from the People's Republic of China (''PRC''). *See Notice of Final Determination of Sales at Less Than Fair Value: Folding Metal Tables and Chairs from the People's Republic of China,* 67 FR 20090 (April 24, 2002). On May 10, 2002, the Department issued its amended final determination in the antidumping duty investigation of folding metal tables and chairs from the PRC. *See Notice of Amended Final Determination of Sales at Less Than Fair Value: Folding Metal Tables and Chairs from the People's Republic of China,* 67 FR 34898 (May 16, 2002) (''Amended Final Determination''). In the Amended Final Determination, the Department amended the weighted-average margin for Feili Furniture Development Co., Ltd. and Feili (Fujian) Co., Ltd. (''Feili Group''), Dongguan Shichang Metals Factory Co. Ltd., and New-Tec Integration Co., Ltd.

On June 4, 2002, the International Trade Commission notified the Department of its final determination pursuant to section 735(b)(1)(A)(i) of the Act that an industry in the United States is materially injured by reason of less-than-fair-value imports of folding metal tables and chairs from the PRC. The Commission also determined that critical circumstances do not exist with regard to imports of such merchandise that are subject to the Department's affirmative critical circumstances finding.

Scope of the Investigation

The merchandise subject to this investigation consists of assembled and unassembled folding tables and folding chairs made primarily or exclusively from steel or other metal, as described below:

(1) Assembled and unassembled folding tables made primarily or exclusively from steel or other metal (''folding metal tables''). Folding metal tables include square, round, rectangular, and any other shapes with legs affixed with rivets, welds, or any

other type of fastener, and which are made most commonly, but not exclusively, with a hardboard top covered with vinyl or fabric. Folding metal tables have legs that mechanically fold independently of one another, and not as a set. The subject merchandise is commonly, but not exclusively, packed singly, in multiple packs of the same item, or in five piece sets consisting of four chairs and one table. Specifically excluded from the scope of folding metal tables are the following:

Lawn furniture;
Trays commonly referred to as ''TV trays'';
Side tables;
Child-sized tables;
Portable counter sets consisting of rectangular tables 36″ high and matching stools; and

Banquet tables. A banquet table is a rectangular table with a plastic or laminated wood table top approximately 28″ to 36″ wide by 48″ to 96″ long and with a set of folding legs at each end of the table. One set of legs is composed of two individual legs that are affixed together by one or more cross-braces using welds or fastening hardware. In contrast, folding metal tables have legs that mechanically fold independently of one another, and not as a set.

(2) Assembled and unassembled folding chairs made primarily or exclusively from steel or other metal (''folding metal chairs''). Folding metal chairs include chairs with one or more cross-braces, regardless of shape or size, affixed to the front and/or rear legs with rivets, welds or any other type of fastener. Folding metal chairs include: those that are made solely of steel or other metal; those that have a back pad, a seat pad, or both a back pad and a seat pad; and those that have seats or backs made of plastic or other materials. The subject merchandise is commonly, but not exclusively, packed singly, in multiple packs of the same item, or in five piece sets consisting of four chairs and one table. Specifically excluded from the scope of folding metal chairs are the following:

Folding metal chairs with a wooden back or seat, or both;
Lawn furniture;
Stools;
Chairs with arms; and
Child-sized chairs.

The subject merchandise is currently classifiable under subheadings 9401710010, 9401710030, 9401790045, 9401790050, 9403200010 and 9403200030 of the HTSUS. Although the HTSUS subheadings are provided for convenience and U.S. Customs Service purposes, the Department's written description of the merchandise is dispositive.

Antidumping Duty Order

In accordance with section 736(a)(1) of the Act, the Department is directing Customs officers to assess, upon further advice by the Department, antidumping duties equal to the amount by which the normal value of the merchandise exceeds the export price of the merchandise for all relevant entries of folding metal tables and chairs from the PRC. The antidumping duties will be assessed on all unliquidated entries of folding metal tables and chairs from the PRC entered, or withdrawn from warehouse, for consumption on or after December 3, 2001, the date on which the Department published its notice of preliminary determination in the **Federal Register**. *See Notice of Preliminary Determination of Sales at Less Than Fair Value: Folding Metal Tables and Chairs from the People's Republic of China,* 66 FR 60185. On or after the date of publication of this notice in the **Federal Register**, customs officers must require, at the same time as importers would normally deposit estimated duties on this merchandise, a cash deposit equal to the estimated weighted-average dumping margins as noted below. The PRC-wide rate applies to all exporters of subject merchandise from the PRC other than the companies named. The weighted-average dumping margins are as follows:

Exporter/manufacturer	weighted-average margin percentage
Feili Furniture Development Co., Ltd. and Feili (Fujian) Co., Ltd	13.72
Dongguan Shichang Metals Factory Co. Ltd	13.72
New-Tec Integration Co., Ltd	13.72
Shin Crest Pte. Ltd	00.00
PRC-wide	70.71

This notice constitutes the antidumping duty order with respect to folding metal tables and chairs from the PRC. Interested parties may contact the Department's Central Records Unit, room B–099 of the main Department of Commerce building, for copies of an updated list of antidumping duty orders currently in effect.

This order is published in accordance with section 736(a) of the Act.

Dated: June 14, 2002.

Faryar Shirzad,

Assistant Secretary for Import Administration.

[FR Doc. 02–16199 Filed 6–26–02; 8:45 am]

BILLING CODE 3510–DS–P

DEPARTMENT OF COMMERCE

International Trade Administration

[A–201–820]

Fresh Tomatoes From Mexico

AGENCY: Import Administration, International Trade Administration, Department of Commerce.

ACTION: Notice of intent to terminate suspension agreement, intent to terminate the five-year sunset review, intent to resume antidumping investigation, and request for comments on the use of updated information: fresh tomatoes from mexico.

SUMMARY: On May 31, 2002, Mexican tomato growers accounting for a large percentage of all fresh tomatoes imported into the United States from Mexico provided written notice to the Department of Commerce of their withdrawal from the agreement suspending the antidumping investigation on fresh tomatoes from Mexico. Because the suspension agreement will no longer cover substantially all imports of fresh tomatoes from Mexico when these withdrawals become effective, the Department of Commerce intends to terminate the suspension agreement, terminate the five-year sunset review, and resume the antidumping investigation.

The Department of Commerce invites interested parties to submit comments on whether it should use updated information to complete the antidumping investigation. Comments must be submitted to the Department of Commerce within five days from the date of publication of this notice in the **Federal Register**.

FOR FURTHER INFORMATION CONTACT: Yang Jin Chun or Mark Ross at (202) 482–5760 or (202) 482–4794, respectively; Office of AD/CVD Enforcement 3, Import Administration, International Trade Administration, U.S. Department of Commerce, 14th Street & Constitution Avenue, NW., Washington, DC 20230.

Applicable Statute and Regulations

Unless otherwise indicated, all citations to the statute are references to the provisions effective January 1, 1995, the effective date of the amendments made to the Tariff Act of 1930 (the Act) by the Uruguay Round Agreements Act. In addition, unless otherwise indicated, all citations to Department of Commerce (Department) regulations refer to the regulations codified at 19 CFR part 353 (1996).

SUPPLEMENTARY INFORMATION:

Background

On April 18, 1996, the Department initiated an antidumping investigation to determine whether imports of fresh tomatoes from Mexico are being, or are likely to be, sold in the United States at less than fair value (LTFV) (61 FR 18377, April 25, 1996). On May 16, 1996, the United States International Trade Commission (ITC) notified the Department of its affirmative preliminary injury determination.

On October 10, 1996, the Department and Mexican tomato growers initialed a proposed agreement suspending the antidumping investigation, and on October 28, 1996, the Department preliminarily determined that imports of fresh tomatoes from Mexico are being sold at LTFV in the United States. See *Notice of Preliminary Determination of Sales at Less Than Fair Value and Postponement of Final Determination: Fresh Tomatoes from Mexico*, 61 FR 56607 (November 1, 1996) (*Preliminary Determination*). On the same day, the Department and certain producers/exporters of fresh tomatoes from Mexico signed the final suspension agreement. See *Suspension of Antidumping Investigation: Fresh Tomatoes from Mexico*, 61 FR 56618 (November 1, 1996). On May 31, 2002, Mexican tomato growers accounting for a large percentage of all fresh tomatoes imported into the United States from Mexico submitted to the Department a notice of their withdrawal from the agreement suspending the antidumping investigation on fresh tomatoes from Mexico.

Scope of the Investigation

The products covered by this investigation are all fresh or chilled tomatoes (fresh tomatoes) except for cocktail tomatoes and those tomatoes which are for processing. For purposes of this investigation, cocktail tomatoes are greenhouse-grown tomatoes, generally larger than cherry tomatoes and smaller than roma or common round tomatoes, and are harvested and packaged on-the-vine for retail sale. For purposes of this investigation, processing is defined to include preserving by any commercial process, such as canning, dehydrating, drying or the addition of chemical substances, or converting the tomato product into juices, sauces or purees. Further, imports of fresh tomatoes for processing are accompanied by an ''Importer's Exempt Commodity Form'' (FV–6) (within the meaning of 7 CFR 980.501(a)(2) and 980.212(i)). Fresh tomatoes that are imported for cutting up, not further processed (*e.g.*, tomatoes used in the preparation of fresh salsa or salad bars), and not accompanied by an FV–6 form are covered by the scope of this investigation.

All commercially grown tomatoes sold in the United States, both for the fresh market and for processing, are classified as Lycopersicon esculentum. Important commercial varieties of fresh tomatoes include common round, cherry, plum, and pear tomatoes, all of which, with the exception of cocktail tomatoes, are covered by this investigation. Tomatoes imported from Mexico covered by this investigation are classified under the following subheadings of the Harmonized Tariff Schedules of the United States (HTSUS), according to the season of importation: 0702 and 9906.07.01 through 9906.07.09. Although the HTSUS numbers are provided for convenience and customs purposes, our written description of the scope of this proceeding is dispositive.

Intent To Terminate Suspension Agreement and Resume the Antidumping Investigation

On May 31, 2002, Mexican tomato growers accounting for a large percentage of all fresh tomatoes imported into the United States from Mexico provided written notice to the Department of their withdrawal from the agreement suspending the antidumping investigation on fresh tomatoes from Mexico. Pursuant to the terms of the suspension agreement, these withdrawals will become effective 60 days after this notification to the Department, *i.e.*, July 30, 2002. Because the suspension agreement will no longer cover substantially all imports of fresh tomatoes from Mexico, the Department intends to terminate the suspension agreement effective July 30, 2002.

Intent To Resume Antidumping Investigation

With the termination of the suspension agreement on July 30, 2002, in accordance with section 734(i)(1)(B) of the Act, the Department intends to resume the underlying antidumping investigation. Pursuant to section 734(i)(1)(B) of the Act, the Department intends to resume the investigation as if it had published the affirmative preliminary determination under section 733(b) of the Act on July 30, 2002. As explained in the *Preliminary Determination* at 61 FR 56609, the Department postponed the final determination until the 135th day after the date of the preliminary determination. The Department therefore intends to make its final determination in the resumed investigation by December 12, 2002.

Intent To Terminate the Five-Year Sunset Review

On October 1, 2001, the Department initiated a five-year sunset review of the suspended antidumping investigation on fresh tomatoes from Mexico pursuant to section 751(c) of the Act (66 FR 49926, October 1, 2001). On January 29, 2002, the Department published its preliminary results of the sunset review (67 FR 4237, January 29, 2002) (*Preliminary Results*). In the *Preliminary Results*, the Department preliminarily found that termination of the suspended antidumping duty investigation on fresh tomatoes from Mexico would be likely to lead to the continuation or recurrence of dumping. On May 13, 2002, the Department extended the deadline for the final results of sunset review until August 27, 2002 (67 FR 35099, May 17, 2002).

If the Department terminates the suspension agreement, there will no longer be a suspended investigation for which to perform a sunset review. Therefore, the Department hereby announces its intent to terminate the sunset review of the suspended LTFV investigation on fresh tomatoes from Mexico, effective July 30, 2002.

Request for Comments on the Use of Updated Information

Given the unusual nature of this proceeding (*e.g.*, based on our analysis of U.S. Customs data, three of the originally investigated companies have not exported tomatoes to the United States in the last two years) and the significant lapse of time since initiation of the investigation (*i.e.*, over six years), the Department is considering selecting new respondents and collecting updated information for use in completing the investigation of sales at LTFV. In the event we collect updated information, the period of investigation will be from April 1, 2001, through March 31, 2002. This period reflects the most recently completed four fiscal quarters before the Mexican tomato growers accounting for a large percentage of all fresh tomatoes imported into the United States from Mexico provided written notice to the Department of their withdrawal from the suspension agreement. The Department invites interested parties to submit comments on this issue.

Interested parties should submit comments to the U.S. Department of Commerce, Room 1870, 14th Street and Constitution Avenue, NW, Washington, DC 20230, within five days of the date of publication of this notice in the **Federal Register**. Interested parties must file rebuttal comments within three days after the deadline for submission of

comments. A list of authorities used, a table of contents, and an executive summary of each comment should accompany these submissions to the Department.

International Trade Commission

The Department has notified the International Trade Commission (ITC) of its intent to terminate the suspension agreement and resume the LTFV investigation. If the Department makes a final affirmative determination, then the ITC is scheduled to make its final determination concerning injury within 45 days after publication of the Department's final determination (by approximately January 27, 2003). If both the Department's and the ITC's final determinations are affirmative, the Department will issue an antidumping duty order.

Suspension of Liquidation

The Department will instruct the U.S. Customs Service (Customs) to suspend liquidation of entries of fresh tomatoes from Mexico that are entered, or withdrawn from warehouse, for consumption on or after the effective date of the termination of the suspension agreement, which is July 30, 2002. Customs shall require antidumping duty cash deposits or bonds for entries of the subject merchandise based on the preliminary dumping margins, which range from 4.16 to 188.45 percent.

Administrative Protective Order Access

Administrative protective orders previously granted in the original investigation will remain in effect. Any necessary amendments for changes in staff must be submitted promptly.

This determination is issued and published in accordance with section 733(f) of the Act (19 U.S.C. 1673b(f)) and 19 CFR 353.15(1996).

Dated: June 19, 2002.

Faryar Shirzad,

Assistant Secretary for Import Administration.

[FR Doc. 02–16198 Filed 6–26–02; 8:45 am]

BILLING CODE 3510–DS–P

DEPARTMENT OF COMMERCE

International Trade Administration

[A–421–810]

Certain Cold-Rolled Carbon Steel Flat Products from The Netherlands: Postponement of Final Determination of Sales at Less Than Fair Value

AGENCY: Import Administration, International Trade Administration, Department of Commerce.

ACTION: Notice of Extension of Final Determination of Sales at Less Than Fair Value.

EFFECTIVE DATE: June 27, 2002.

FOR FURTHER INFORMATION CONTACT: Geoffrey Craig or David Salkeld, AD/CVD Enforcement Office VI, Group II, Import Administration, International Trade Administration, U.S. Department of Commerce, 14th Street and Constitution Avenue, NW, Washington, DC 20230; telephone: (202) 482–4161 or (202) 482–1168, respectively.

SUPPLEMENTARY INFORMATION:

Time Limits

Statutory Time Limits

Section 735(a)(1) of the Tariff Act of 1930, as amended (the Act), requires the Department to issue (1) the final determination regarding sales at less than fair value (LTFV) in this investigation within 75 days after the date of its preliminary determination. However, section 735(a)(2) of the Act states that the Department may postpone the final determination until not later than 135 days after the date of publication of the preliminary determination if, in the case of a proceeding in which the preliminary determination by the administering authority under section 733(b) was affirmative, a request in writing for such a postponement is made by an exporter which accounts for a significant portion of the exports of the merchandise which is subject to the investigation. Section 351.210 of the Department's regulations further states that the exporter must also request that the Department extend the provisional measures from a four month period to a period of not more than 6 months. Alternatively, in the case of a proceeding in which the preliminary determination by the administering authority under section 733(b) was negative, the request for postponement may be made in writing by the petitioner.

Background

On May 9, 2002, the Department published the preliminary determination regarding sales at LTFV in this investigation (67 FR 31268). We preliminarily determined that certain cold-rolled carbon steel flat products (cold-rolled steel) from the Netherlands are being, or likely to be, sold in the United States at LTFV, as provided in section 733(b) of the Tariff Act of 1930, as amended. On May 1, 2002, Corus Staal BV, the sole respondent in this investigation, requested that the Department postpone the final determination to 135 days after the publication of the preliminary determination and requested that the Department extend the provisional measures period from four months to a period not longer than 6 months.

Postponement of Final Determination

Given the fact that the Department made an affirmative preliminary determination and the largest exporter/producer of imports during the period of investigation requested postponement and also asked that the Department extend the provisional measures from a four month period to a period of not more than six months, as required by the Department's regulations, we are postponing the final determination until no later than September 23, 2002 (*i.e.*, 135 days after the publication of the preliminary determination).

This extension is in accordance with section 735(a)(2)(A) of the Act.

Dated: June 19, 2002.

Faryar Shirzad,

Assistant Secretary for Import Administration.

[FR Doc. 02–16290 Filed 6–26–02; 8:45 am]

BILLING CODE 3510–DS–S

DEPARTMENT OF COMMERCE

International Trade Administration

Export Trade Certificate of Review

ACTION: Notice of Issuance of an Export Trade Certificate of Review, Application No. 02–00001.

SUMMARY: The Department of Commerce has issued an Export Trade Certificate of Review to ROCACO INC., (''ROCACO'') dba REIS Network and World Business Exchange Network. This notice summarizes the conduct for which certification has been granted.

FOR FURTHER INFORMATION CONTACT: Jeffrey C. Anspacher, Director, Office of Export Trading Company Affairs, International Trade Administration, by telephone at (202) 482–5131 (this is not a toll-free number), or by E-mail at *oetca@ita.doc.gov.*

SUPPLEMENTARY INFORMATION: Title III of the Export Trading Company Act of 1982 (15 U.S.C. Sections 4001–21) authorizes the Secretary of Commerce to issue Export Trade Certificates of Review. The regulations implementing Title III are found at 15 CFR part 325 (2001).

The Office of Export Trading Company Affairs (''OETCA'') is issuing this notice pursuant to 15 CFR 325.6(b), which requires the Department of Commerce to publish a summary of the Certificate in the **Federal Register**. Under section 305 (a) of the Act and 15 CFR 325.11(a), any person aggrieved by the Secretary's determination may, within 30 days of the date of this notice, bring an action in any appropriate district court of the United States to set aside the determination on the ground that the determination is erroneous.

Description of Certified Conduct

Export Trade

1. *Products.* All products.
2. *Services.* All services.
3. *Technology Rights.* All intellectual property rights associated with Products or Services, including, but not limited to: patents, trademarks, copyrights, and trade secrets.
4. *Export Trade Facilitation Services (as they Relate to the Export of Products, Services, and Technology Rights).* Export Trade Facilitation Services include professional services in the areas of government relations and assistance with state and federal programs; foreign trade and business protocol; consulting; market research and analysis; collection and dissemination of information on trade opportunities; marketing; negotiations; joint ventures; export management; export licensing; advertising; documentation and services related to compliance with customs requirements; insurance and financing; trade show exhibitions and seminars; organizational development; management and labor strategies; transfer of technology; and facilitating transportation and shipping.

Export Markets

The Export Markets include all parts of the world except the United States (the fifty states of the United States, the District of Columbia, the Commonwealth of Puerto Rico, the Virgin Islands, American Samoa, Guam, the Commonwealth of the Northern Mariana Islands, and the Trust Territory of the Pacific Islands).

Export Trade Activities and Methods of Operation

ROCACO and/or its Member may:

1. Develop Export Trading Companies who provide and/or arrange for the provision of Export Trade Facilitation Services;
2. Engage in promotional and marketing activities and collect information on trade opportunities in the Export Markets and distribute such information to clients;
3. Enter into exclusive and/or non-exclusive licensing and/or sales agreements with Suppliers for the export of Products, Services, and/or Technology Rights to Export Markets;
4. Enter into exclusive and/or non-exclusive agreements with distributors and/or sales representatives in Export Markets;
5. Allocate export sales or divide Export Markets among Suppliers for the sale and/or licensing of Products, Services, and/or Technology Rights;
6. Allocate export orders among Suppliers;
7. Establish the price of Products, Services, and/or Technology Rights for sales and/or licensing in Export Markets;
8. Negotiate, enter into, and/or manage licensing agreements for the export of Technology Rights;
9. Enter into contracts for shipping; and
10. Exchange information on a one-to-one basis with individual Suppliers regarding inventories and near-term production schedules for the purpose of determining the availability of Products for export and coordinating export with its distributors.

Terms and Conditions of Certificate

1. In engaging in Export Trade Activities and Methods of Operation, neither ROCACO nor its Member will intentionally disclose, directly or indirectly, to any Supplier any information about any other Supplier's costs, production, capacity, inventories, domestic prices, domestic sales, or U.S. business plans, strategies, or methods that are not already generally available to the trade or public.

2. ROCACO and its Member will comply with requests made by the Secretary of Commerce on behalf of the Secretary of Commerce or the Attorney General for information or documents relevant to conduct under the Certificate. The Secretary of Commerce will request such information or documents when either the Attorney General or the Secretary of Commerce believes that the information or documents are required to determine that the Export Trade, Export Trade Activities, and Methods of Operation of a person protected by this Certificate of Review continue to comply with the standards of Section 303(a) of the Act.

Definitions

1. ''Member,'' within the meaning of Section 325.2(1) of the Regulation, is The REIS Foundation.
2. ''Supplier'' means a person who produces, provides, or sells Products, Services and/or Technology Rights.

Protection Provided by the Certificate

This Certificate protects ROCACO, its Member, and their directors, officers, and employees acting on their behalf from private treble damage actions and government criminal and civil suits under U.S. federal and state antitrust laws for the export conduct specified in the Certificate and carried out during its effective period in compliance with its terms and conditions.

A copy of this certificate will be kept in the International Trade Administration's Freedom of Information Records Inspection Facility Room 4102, U.S. Department of Commerce, 14th Street and Constitution Avenue, NW., Washington, DC 20230.

Dated: June 21, 2002.

Jeffrey C. Anspacher,

Director, Office of Export Trading, Company Affairs.

[FR Doc. 02–16195 Filed 6–26–02; 8:45 am]

BILLING CODE 3510–DR–P

DEPARTMENT OF COMMERCE

International Trade Administration

[Docket No. 020613147–2147–01]

International Buyer Program Support for Domestic Trade Shows

AGENCY: International Trade Administration, Commerce.

ACTION: Notice and call for applications for the FY 2004 International Buyer Program.

SUMMARY: This notice sets forth objectives, procedures and application review criteria associated with the International Buyer Program (IBP) of the U.S. Department of Commerce (DOC), to support domestic trade shows. Selection is for the International Buyer Program for Fiscal Year 2004 (October 1, 2003 through September 30, 2004).

The International Buyer Program was established to bring international buyers together with U.S. firms by promoting leading U.S. trade shows in industries with high export potential. The International Buyer Program emphasizes cooperation between the DOC and trade show organizers to benefit U.S. firms exhibiting at selected events and

provides practical, hands-on assistance such as export counseling and market analysis to U.S. companies interested in exporting. The assistance provided to show organizers includes worldwide overseas promotion of selected shows to potential international buyers, end-users, representatives and distributors. The worldwide promotion is executed through the offices of the DOC United States and Foreign Commercial Service (hereinafter referred to as the Commercial Service) in 74 countries representing America's major trading partners, and also in U.S. Embassies in countries where the Commercial Service does not maintain offices. The Department expects to select approximately 28 shows for FY2004 from among applicants to the program. Shows selected for the International Buyer Program will provide a venue for U.S. companies interested in expanding their sales into international markets.

DATES: Applications must be received within August 26, 2002. Contributions (discussed below) are for shows selected and promoted during the period between October 1, 2003, and September 30, 2004.

ADDRESSES: Export Promotion Services/ International Buyer Program, Commercial Service, International Trade Administration, U.S. Department of Commerce, 14th & Constitution Avenue, NW., H2116, Washington, DC 20230. Telephone: (202) 482–0146 (For deadline purposes, facsimile or email applications will be accepted as interim applications, to be followed by signed original applications).

FOR FURTHER INFORMATION CONTACT: Jim Boney, Product Manager, International Buyer Program, Room 2116, Export Promotion Services, U.S. and Foreign Commercial Service, International Trade Administration, U.S. Department of Commerce, 14th & Constitution Avenue, NW., Washington, DC 20230. Telephone: (202) 482–0146; Fax: (202) 482–0115; Email: *Jim.Boney@mail.doc.gov.*

SUPPLEMENTARY INFORMATION: The Commercial Service is accepting applications for the International Buyer Program (IBP) for events taking place between October 1, 2003, and September 30, 2004. A contribution of *$7,000* for shows of five days or less is required. For shows more than five days in duration, or requiring more than one International Business Center, a contribution of *$9,000* is required.

Under the IBP, the Commercial Service seeks to bring together international buyers with U.S. firms by selecting and promoting U.S. domestic trade shows in international markets in industries with high export potential. Selection of a trade show is valid for one event, *i.e., a trade show organizer seeking selection for a recurring event must submit a new application for selection for each occurrence of the event.* Even if the event occurs more than once in the 12-month period covering this announcement, the trade show organizer must submit a separate application for each event.

The Commercial Service will select approximately 28 events to support between October 1, 2003, through September 30, 2004. The Commercial Service will select those events that, in its judgment, most clearly meet the Commercial Service's statutory mandate to promote U.S. exports, especially those of small and medium size enterprises and that best meet selection criteria articulated below.

Successful show organizer applicants will be required to enter into a Memorandum of Understanding (MOU) with the DOC. The MOU constitutes an agreement between the DOC and the show organizer specifying which responsibilities are to be undertaken by DOC as part of the IBP and, in turn, which responsibilities are to be undertaken by the show organizer. *Anyone who requests information regarding applying will be sent a copy of the MOU along with the application package.* The responsibilities to be undertaken by DOC will be carried out by the Commercial Service.

The Department selects trade shows to be IBP partners that it determines to be leading international trade shows appropriate for participation by U.S. exporting firms and for promotion in overseas markets by U.S. Embassies and Consulates. Selection as an IBP partner does not constitute a guarantee by the U.S. Government of the show's success. IBP partnership status is not an endorsement of the show organizer except as to its international buyer activities. Non-selection should not be viewed as a finding that the event will not be successful in the promotion of U.S. exports.

Exclusions: Trade shows that are either first-time or horizontal (non-industry specific) events will not be considered. Annual trade shows will not be selected for this program more than three times in any four-year period (e.g., shows selected for fiscal years 2001, 2002 and 2003 are not eligible for inclusion in this program in fiscal year 2004, but can be considered in subsequent years).

General Selection Criteria: The Department will select shows to be IBP partners that, in the judgment of the Department, best meet the following criteria:

(a) *Export Potential:* The trade show promotes products and services from U.S. industries that have high export potential, as determined by DOC sources, e.g., Commercial Service best prospects lists and U.S. export statistics (certain industries are rated as priorities by our domestic and international commercial officers in their Country Commercial Guides).

(b) *International Interest:* The trade show meets the needs of a significant number of overseas markets and corresponds to marketing opportunities as identified by the posts in their Country Commercial Guides (e.g. best prospect lists). Previous international attendance at the show may be used as an indicator.

(c) *U.S. Content of Show Exhibitors:* Trade shows with exhibitors featuring a high percentage of U.S. products or products with a high degree of U.S. content will be preferred. To be considered ''U.S.'', products and services to be exhibited must be produced or manufactured in the U.S., or if produced or manufactured outside of the U.S., the products or services must contain more than 50% U.S. content and must be marketed under the name of a U.S. firm.

(d) *Stature of the show:* The trade show is clearly recognized by the industry it covers as a leading event for the promotion of that industry's products and services, both domestically and internationally, and as a showplace for the latest technology or services in that industry or sector.

(e) *Exhibitor Interest:* There is demonstrated interest on the part of U.S. exhibitors in receiving international business visitors during the trade show. A significant number of U.S. exhibitors should be new-to-export or seeking to expand sales into additional international markets.

(f) *Overseas Marketing:* There has been a demonstrated effort to market prior shows overseas. In addition, the applicant should describe in detail the international marketing program to be conducted for the event, explaining how efforts should increase individual and group international attendance. [Planned cooperation with Visit USA Committees overseas is desirable.]

(g) *Logistics:* The trade show site, facilities, transportation services, and availability of accommodations are in the stature of an international-class trade show.

(h) *Cooperation:* The applicant demonstrates a willingness to cooperate with the Commercial Service to fulfill the program's goals and to adhere to

target dates set out in the MOU and the event timetable, both of which are available from the program office (*see* ''For Further Information'' section above on when, where, and how to apply). Past experience in the IBP will be taken into account in evaluating current applications to the program.

Legal Authority: The Commercial Service has the legal authority to enter into MOUs with for-profit show organizers and other groups (partners) under the provisions of the Mutual Educational and Cultural Exchange Act of 1961 ((MECEA), as amended (22 U.S.C. Section 2455(f)) MECEA allows the Commercial Service to accept contribution of funds and services from firms for the purposes of furthering its mission. The statutory program authority for the Commercial Service to conduct the International Buyer Program is 15 U.S.C. 4724.

The Office of Management and Budget (OMB) has approved the information collection requirements of the application to this program under the provisions of the Paperwork Reduction Act of 1995 (44 U.S.C. 3512 *et seq.*) (OMB Control No. 0625–0151). Notwithstanding any other provision of law, no person is required to respond to nor shall a person be subject to a penalty for failure to comply with a collection of information subject to the requirements of the Paperwork Reduction Act unless that collection of information displays a currently valid OMB Control Number.

John Klingelhut,

Director, Office of Trade Event Programs, U.S. and Foreign Commercial Service, International Trade Administration, U.S. Department of Commerce.

[FR Doc. 02–16258 Filed 6–26–02; 8:45 am]

BILLING CODE 3510–FP–P

DEPARTMENT OF COMMERCE

National Oceanic and Atmospheric Administration

[I.D. 061402C]

Gulf of Mexico Fishery Management Council; Public Meetings; Correction

AGENCY: National Marine Fisheries Service (NMFS), National Oceanic and Atmospheric Administration (NOAA), Commerce.

ACTION: Notice of public meeting; correction.

SUMMARY: The Gulf of Mexico Fishery Management Council published a document in the **Federal Register** of June 24, 2002, convening public meetings. The document contained insufficient data. This document provides additional important information concerning these meetings..

DATES: The meetings will be held on July 8–12, 2002.

ADDRESSES: These meetings will be held at the Hyatt Sarasota Hotel, 1000 Boulevard of the Arts, Sarasota, FL 34236; telephone: 941–953–1234.

Council address: Gulf of Mexico Fishery Management Council, 3018 U.S. Highway 301 North, Suite 1000, Tampa, FL 33619.

FOR FURTHER INFORMATION CONTACT: Wayne E. Swingle, Executive Director, Gulf of Mexico Fishery Management Council; telephone: (813) 228–2815.

SUPPLEMENTARY INFORMATION:

Correction

In 67 FR Doc. 02–15885 of June 24, 2002, on page 42547, in the second column, add the following information under the last entry for July 12, 2002, ''Other Business'' to read as follows:

11:45–12 noon—Other Business.

The Council will consider a request from the South Atlantic Fishery Management Council (SAFMC) to the Secretary of Commerce that the SAFMC be allowed to have their own Dolphin/Wahoo Fishery Management Plan.

Dated: June 24, 2002.

Theophilus R. Brainerd,

Acting Director, Office of Sustainable Fisheries, National Marine Fisheries Service.

[FR Doc. 02–16280 Filed 6–26–02; 8:45 am]

BILLING CODE 3510–22–S

DEPARTMENT OF COMMERCE

National Oceanic and Atmospheric Administration

[I.D. 052102I]

Marine Mammals; File No. 662–1345

AGENCY: National Marine Fisheries Service (NMFS), National Oceanic and Atmospheric Administration (NOAA), Commerce.

ACTION: Issuance of permit amendment.

SUMMARY: Notice is hereby given that Dena Matkin, P.O. Box 22, Gustavus, Alaska 99826, has been issued an amendment to scientific research Permit No. 662–1345–00.

ADDRESSES: The amendment and related documents are available for review upon written request or by appointment in the following office(s):

Permits, Conservation and Education Division, Office of Protected Resources, NMFS, 1315 East-West Highway, Room 13705, Silver Spring, MD 20910; phone (301)713–2289; fax (301)713–0376; and Alaska Region, NMFS, P.O. Box 21668, Juneau, AK 99802-1668; phone (907)586–7221; fax (907)586–7249.

FOR FURTHER INFORMATION CONTACT: Jill Lewandowski or Trevor Spradlin, (301)713–2289.

SUPPLEMENTARY INFORMATION: The subject amendment to Permit No. 662–1345–00, originally issued on May 30, 1997 (62 FR 13368), has been granted under the authority of the Marine Mammal Protection Act of 1972, as amended (16 U.S.C. 1361 et seq.), and the Regulations Governing the Taking and Importing of Marine Mammals (50 CFR part 216).

The permit holder requested authorization to extend Permit No. 662–1345–00 for an additional 12 months and change the annual report due date to December 31. The new expiration date for the permit is May 31, 2003, and the new annual report due date is December 31 of each year the permit is valid. The permit number has been changed to No. 662–1345–01 to reflect that the permit has been amended.

Dated: June 20, 2002.

Trevor Spradlin,

Acting Chief, Permits, Conservation and Education Division, Office of Protected Resources, National Marine Fisheries Service.

[FR Doc. 02–16282 Filed 6–26–02; 8:45 am]

BILLING CODE 3510–22–S

DEPARTMENT OF COMMERCE

National Oceanic and Atmospheric Administration

[I.D. 062002A]

Marine Mammals; Permit No. 358-1564–02, Permit No. 782–1532, File No. 1016–1651, File No. 800–1664, File No. 434–1669, and File No. 881–1668

AGENCY: National Marine Fisheries Service (NMFS), National Oceanic and Atmospheric Administration (NOAA), Commerce.

ACTION: Receipt of applications to amend permits, receipt of applications for scientific research permits, and availability of Environmental Assessment.

SUMMARY: Notice is hereby given of the following actions regarding permits for takes of Steller sea lions (*Eumetopias jubatus*) for the purposes of scientific research: NMFS has received permit applications from Dr. Glenn VanBlaricom, Washington Cooperative Fish and Wildlife Research Unit, School of Aquatic and Fishery Sciences, University of Washington, Seattle, WA 98195; Dr. Randall Davis, Department of

Marine Biology, Texas A&M University, Galveston, TX 77551; the Oregon Department of Fish and Wildlife (ODFW), Corvallis, Oregon 97330 (PI: Robin Brown); and the Alaska SeaLife Center (ASLC), Seward, Alaska 99664 (PI: Don Calkins). NMFS has received applications to amend Permit No. 782–1532, issued to The National Marine Mammal Laboratory (NMML), National Marine Fisheries Service, NOAA, Seattle, WA 98115–0070 (PI: Dr. Thomas Loughlin) and Permit No. 358–1564-02, issued to the Alaska Department of Fish and Game (ADFG), Juneau, Alaska 99802–5526 (PI: Dr. Thomas Gelatt).

DATES: Written or telefaxed comments on the new applications, amendment requests or Environmental Assessment must be received on or before July 29, 2002.

ADDRESSES: The applications, amendment requests and related documents, and the Environmental Assessment are available for review upon written request, by downloading from the internet, or by appointment in the following office(s):

All documents: Permits, Conservation and Education Division, Office of Protected Resources, NMFS, 1315 East-West Highway, Room 13705, Silver Spring, MD 20910, (301)713–2289, or the Division's web page at *http://www.nmfs.noaa.gov/prot_res/PR1/Permits/pr1permits_review.html* .

For permit 782–1532 (NMML) and Files No. 1016–1651 (Univ. of Washington) and 434–1669 (ODFW): Northwest Region, NMFS, 7600 Sand Point Way NE, BIN C15700, Bldg. 1, Seattle, WA 98115–0700,(206)526–6150; and

For permits 782–1532 (NMML), 358–1564–02 (ADFG) and Files No. 1016–1651 (Univ. of Washington), 800–1664 (Davis), and 881–1668 (ASLC): Alaska Region, NMFS, P.O. Box 21668, Juneau, AK 99802–1668,(907)586–7221.

FOR FURTHER INFORMATION CONTACT: Tammy Adams or Ruth Johnson, 301/713–2289.

SUPPLEMENTARY INFORMATION: The subject permits and amendments are requested under the authority of the Marine Mammal Protection Act of 1972, as amended (MMPA; 16 U.S.C. 1361 *et seq.*), the Regulations Governing the Taking and Importing of Marine Mammals (50 CFR part 216), the Endangered Species Act of 1973, as amended (ESA; 16 U.S.C. 1531 *et seq.*), the regulations governing the taking, importing, and exporting of endangered and threatened species (50 CFR parts 222–226), and the Fur Seal Act of 1966, as amended (16 U.S.C. 1151 *et seq.*).

Applications to Amend Permits

A notice of receipt for a major amendment to Permit No. 358–1564–00, issued to Alaska Department of Fish and Game on June 28, 2000 (65 FR 39878) was published on July 5, 2001 (66 FR 35412). Permit No. 358–1564–00 authorizes the permit holder to take Steller sea lions of all ages and both sexes over a 5–year period in Alaska and British Columbia by aerial/boat surveys, capturing, handling, tagging, blood/biopsy sampling, and branding. The permit holder requested authorization to: administer Evans blue dye, collect additional blood and tissue samples from, and attach scientific instruments to Steller sea lions already authorized to be captured and handled, and increase the frequency of aerial surveys and recaptures for purposes of scientific research. Subsequent to publication of the Notice of Receipt to amend this permit, the Permit Holder submitted supplementary information and requests for additional modifications to the permit, including an increase in the number of accidental mortalities.

A notice of receipt for a major amendment to Permit No. 782–1532, issued to NMFS, National Marine Mammal Laboratory on January 14, 2000 (65 FR 2383) was published on June 8, 2001 (66 FR 30885). Permit No. 782–1532–01 authorizes the permit holder to take Steller sea lions of all ages and both sexes over a 5–year period in Alaska, California, Washington, and Oregon by aerial/boat surveys, capturing, handling, tagging, blood/biopsy sampling, and branding. The permit holder requested authorization to: increase the frequency of takes by aerial surveys; include Southeast Alaska in monthly surveys; increase the number of animals to be incidentally harassed during scat collection; and allow additional procedures for animals already authorized for capture, including using gas anesthesia, branding of any animal captured, injecting Evan's blue dye and deuterated water, collecting additional blood and tissue samples, and using bioelectric impedance analysis. Subsequent to publication of the Notice of Receipt to amend this permit, the Permit Holder submitted supplementary information and requests for additional modifications to the permit, including an increase in the number of accidental mortalities.

Subsequent to publication of the Notice of Receipt to amend these permits, the NMFS determined that preparation of an Environmental Assessment (EA) was warranted and deferred a decision on these amendment requests pending its completion.

Applications for Permits

Dr. Randall Davis (File No. 800–1664) proposes to take threatened and endangered Steller sea lions in Alaska by capture, anesthesia, hot-branding, tissue sampling (including blood, skin, and blubber), attachment of scientific instruments (video system/data logger and satellite transmitters), and accidental mortality to compare hunting behavior and three-dimensional movements of free-ranging adult females (including pregnant animals) and juveniles of both sexes at various rookeries, as it relates to prey preferences and predator-prey relationships.

Dr. Glenn VanBlaricom (File No. 1016–1641) proposes to take threatened and endangered Steller sea lions in the Aleutian Islands, Gulf of Alaska, and southeast Alaska by remote biopsy darting, incidental harassment, and accidental mortality, to collect blubber samples for analysis to assess prey selection. Some samples will be exported to Canada for analysis. Northern fur seals (*Callorhinus ursinus*) and harbor seals (*Phoca vitulina richardsi*) may be incidentally harassed during biopsy sampling.

The Oregon Department of Fish and Wildlife (File No. 434–1669) proposes to take threatened Steller sea lions in California, Washington, and Oregon by capture, hot-branding, flipper tagging, collection of blood and tissue samples from, attachment external scientific instruments to, harassment incidental to these activities and remote monitoring, and accidental mortality. The purpose of the research is to continue monitoring the status of the Alaskan Steller sea lion population and to identify causes of the population decline so as to provide for the population's recovery.

The Alaska SeaLife Center (File No. 881–1668) proposes to take threatened and endangered Steller sea lions in Alaska by capture, hot-branding, flipper tagging, collection of blood and tissue samples from, attachment of external scientific instruments to, implanting scientific instruments in, holding in captivity for up to 3 months, conducting controlled feeding and endocrinology experiments on, accidental mortality, and harassment incidental to these activities and remote monitoring. The overall purpose of the research is to collect information on the health status, physiology, life history, foraging behavior and habitat use of Steller sea lions.

NOAA environmental review procedure provide that scientific

research permits are generally categorically excluded from the National Environmental Policy Act of 1969 (NEPA; 42 U.S.C. 4321 *et seq.*) requirements to prepare an EA or environmental impact statement (EIS). However, because of the magnitude and intensity of proposed research, which is largely related to the recent funding opportunities, and the intense public interest in this species, NMFS determined that an EA was warranted. For additional information on recent funding, see the notice of availability of funds for the Steller Sea Lion Research Initiative (66 FR 15842). An EA was prepared on the issuance of the proposed permits, resulting in a finding of no significant impact, and is available for review as a companion document to the scientific research permit applications. The EA also considered proposed takes of Steller sea lions by aerial/vessel survey, harassment during scat collection and behavioral observations, as requested in an application for a scientific research permit submitted by the Aleutians East Borough, File No. 1010–1641. A notice of receipt of this application was published on August 22, 2001 (66 FR 44120) and a decision was deferred pending preparation of the EA.

Concurrent with the publication of this notice in the **Federal Register**, NMFS is forwarding copies of these applications to the Marine Mammal Commission and its Committee of Scientific Advisors.

Dated: June 21, 2002.

Trevor Spradlin,

Acting Chief, Permits, Conservation and Education Division, Office of Protected Resources, National Marine Fisheries Service.

[FR Doc. 02–16283 Filed 6–26–02; 8:45 am]

BILLING CODE 3510–22–S

DEPARTMENT OF COMMERCE

National Oceanic and Atmospheric Administration

[I.D. 061002B]

Marine Mammals; Permit No. 782–1645–01

AGENCY: National Marine Fisheries Service (NMFS), National Oceanic and Atmospheric Administration (NOAA), Commerce.

ACTION: Issuance of permit amendment.

SUMMARY: Notice is hereby given that the National Marine Mammal Laboratory, Alaska Fisheries Science Center, 7600 Sand Point Way, N.E., BIN C15700, Seattle, WA 98115 (PI: Dr. Robert DeLong) has been issued an amendment to scientific research Permit No. 782–1645.

ADDRESSES: The amendment and related documents are available for review upon written request or by appointment in the following office(s):

Permits, Conservation and Education Division, Office of Protected Resources, NMFS, 1315 East-West Highway, Room 13705, Silver Spring, MD 20910; phone (301)713–2289; fax (301)713–0376;

Northwest Region, NMFS, 7600 Sand Point Way NE, BIN C15700, Bldg. 1, Seattle, WA 98115–0700; phone (206)526–6150; fax (206)526–6426; and

Southwest Region, NMFS, 501 West Ocean Blvd., Suite 4200, Long Beach, CA 90802–4213; phone (562)980–4001; fax (562)980–4018.

FOR FURTHER INFORMATION CONTACT: Ruth Johnson or Carrie Hubard (301)713–2289.

SUPPLEMENTARY INFORMATION: On April 25, 2002, notice was published in the **Federal Register** (67 FR 20491) that an amendment of Permit No. 782–1645, issued September 4, 2001 (66 FR 47016), had been requested by the above-named organization. The requested amendment has been granted under the authority of the Marine Mammal Protection Act of 1972, as amended (16 U.S.C. 1361 *et seq.*), and the Regulations Governing the Taking and Importing of Marine Mammals (50 CFR part 216).

The Permit was amended to allow capture, tagging and sampling of Dall's porpoise in Washington, Oregon and California waters.

Dated: June 21, 2002.

Trevor R. Spradlin,

Acting Chief, Permits, Conservation and Education Division, Office of Protected Resources, National Marine Fisheries Service.

[FR Doc. 02–16284 Filed 6–26–02; 8:45 am]

BILLING CODE 3510–22–S

COMMODITY FUTURES TRADING COMMISSION

Agency Information Collection Activities: Rules Related to Risk Disclosure Concerning Exchange Traded Commodity Futures and Options

AGENCY: Commodity Futures Trading Commission.

ACTION: Notice.

SUMMARY: The Commodity Futures Trading Commission (CFTC) is announcing an opportunity for public comment on the proposed collection of certain information by the agency. Under the Paperwork Reduction act of 1995 (PRA), 44 U.S.C. 3501 *et seq.*, Federal agencies are required to publish notice in the **Federal Register** concerning each proposed collection of information, including each proposed extension of an existing collection of information, and to allow 60 days for public comment in response to the notice. This notice solicits comments on rules related to risk disclosure concerning exchange traded commodity futures and options.

DATES: Comments must be submitted on or before August 26, 2002.

ADDRESSES: Comments may be mailed to Lawrence B. Patent, Division of Trading and Markets, U.S. Commodity Futures Trading Commission, 1155 21st Street, NW., Washington, DC 20581.

FOR FURTHER INFORMATION CONTACT: Lawrence B. Patent, (202) 418–5439; FAX: (202) 418–5536; E-mail: *lpatent@cftc.gov*.

SUPPLEMENTARY INFORMATION: Under the PRA, Federal agencies must obtain approval from the Office of Management and Budget (OMB) for each collection of information they conduct or sponsor. ''Collection of information'' is defined in 44 U.S.C. 3502(3) and 5 CFR 1320.3(c) and includes agency requests or requirements that members of the public submit reports, keep records, or provide information to a third party. Section 3506(c)(2)(A) of the PRA, 44 U.S.C. 3506(c)(2)(A), requires Federal agencies to provide a 60-day notice in the **Federal Register** concerning each proposed collection of information, including each proposed collection of information, including each proposed extension of an existing collection of information, before submitting the collection to OMB for approval. To comply with this requirement, the CFTC is publishing notice of the proposed collection of information listed below.

With respect tot he following collection of information, the CFTC invites comments on:

- Whether the proposed collection of information is necessary for the proper performance of the functions of the Commission, including whether the information will have a practical use;
- The accuracy of the Commission's estimate of the burden of the proposed collection of information, including the validity of the methodology and assumptions used;
- Ways to enhance the quality, usefulness, and clarity of the information to be collected; and
- Ways to minimize the burden of collection of information on those who are to respond, including through the use of appropriate automated electronic, mechanical, or other technological collection techniques or other forms of

information technology; *e.g.*, permitting electronic submission of responses.

Rules Related to Risk Disclosure Concerning Exchange Traded Commodity Futures and Options, OMB Control Number 3038–0007—Extension

The rules require futures commission merchants and introducing brokers: (1) To provide their customers with standard risk disclosure statements concerning the risk of trading commodity interests; and (2) to retain all promotional material and the source of authority for information contained therein. The purpose of these rules is to ensure that customers are advised of the risks of trading commodity interests and to avoid fraud and misrepresentation. This information collection contains the recordkeeping and reporting requirements needed to ensure regulatory compliance with Commission rules relating to this issue.

The Commission estimates the burden of this collection of information as follows:

ESTIMATED ANNUAL REPORTING BURDEN

17 CFR section	Annual number of respondents	Total annual responses	Hours per response	Total hours
33.7 and 33.8	415	20,380	0.39	7,985

There are no capital costs or operating and maintenance costs associated with this collection.

Dated: June 20, 2002.

Jean A. Webb,

Secretary of the Commission.

[FR Doc. 02–16202 Filed 6–26–02; 8:45 am]

BILLING CODE 6351–01–M

DEPARTMENT OF DEFENSE

Office of the Secretary

[Transmittal No. 02–26]

36(b)(1) Arms Sales Notification

AGENCY: Department of Defense, Defense Security Cooperation Agency.

ACTION: Notice.

SUMMARY: The Department of Defense is publishing the unclassified text of a section 36(b)(1) arms sales notification. This is published to fulfill the requirements of section 155 of Public Law 104–164 dated 21 July 1996.

FOR FURTHER INFORMATION CONTACT: Ms. J. Hurd, DSCA/COMPT/RM, (703) 604–6575.

The following is a copy of a letter to the Speaker of the House of Representative, Transmittal 02–26 with attached transmittal, policy justification, and Sensitivity of Technology.

Dated: June 20, 2002.

Patricia L. Toppings,

Alternate OSD Federal Register Liaison Officer, Department of Defense.

BILLING CODE 5001–08–M

DEFENSE SECURITY COOPERATION AGENCY

WASHINGTON, DC 20301-2800

13 June 2002

In reply refer to:
I-02/005890

The Honorable J. Dennis Hastert
Speaker of the House of
Representatives
Washington, D.C. 20515-6501

Dear Mr. Speaker:

Pursuant to the reporting requirements of Section 36(b)(1) of the Arms Export Control Act (AECA), as amended, we are forwarding herewith Transmittal No. 02-26, concerning the Department of the Navy's proposed Letter(s) of Offer and Acceptance (LOA) to Japan for defense articles and services estimated to cost $24 million. Soon after this letter is delivered to your office, we plan to notify the news media.

Sincerely,

Richard J. Millies
Deputy Director

Same ltr to: House Committee on International Relations
Senate Committee on Appropriations
Senate Committee on Foreign Relations
House Committee on Armed Services
Senate Committee on Armed Services
House Committee on Appropriations

Attachments

Transmittal No. 02-26

Notice of Proposed Issuance of Letter of Offer
Pursuant to Section 36(b)(1)
of the Arms Export Control Act, as amended

(i) **Prospective Purchaser: Japan**

(ii) **Total Estimated Value:**

Major Defense Equipment*	$19 million
Other	$ 5 million
TOTAL	$24 million

(iii) **Description and Quantity or Quantities of Articles or Services under Consideration for Purchase: 16 SM-2 Block IIIA STANDARD missiles, 16 MK 13 MOD 0 canisters, containers, spare and repair parts, supply support, U.S. Government and contractor technical assistance and other related elements of logistics support**

(iv) **Military Department: Navy (AOZ)**

(v) **Prior Related Cases, if any:**
FMS case AKV - $12 million - 24Mar92
FMS case ALI - $ 7 million - 28Oct92
FMS case ALT - $10 million - 27Aug93
FMS case AMZ - $ 7 million - 17Oct94
FMS case ANU - $17 million - 21Dec98
FMS case AOB - $16 million - 9Dec99
FMS case AOI - $17 million - 1Nov00
FMS case AOO - $18 million – 19Dec01

(vi) **Sales Commission, Fee, etc., Paid, Offered, or Agreed to be Paid: none**

(vii) **Sensitivity of Technology Contained in the Defense Article or Defense Services Proposed to be Sold: see Annex attached**

(viii) **Date Report Delivered to Congress:**

* as defined in Section 47(6) of the Arms Export Control Act.

POLICY JUSTIFICATION

Japan – SM-2 Block III STANDARD Missiles

The Government of Japan has requested a possible sale of 16 SM-2 Block IIIA STANDARD missiles, 16 MK 13 MOD 0 canisters, containers, spare and repair parts, supply support, U.S. Government and contractor technical assistance and other related elements of logistics support. The estimated cost is $24 million.

Japan is one of the major political and economic powers in East Asia and the Western Pacific and a key ally of the United States in ensuring the peace and stability of that region. It is vital to the U.S. national interest to assist Japan to develop and maintain a strong and ready self-defense capability, which will contribute to an acceptable military balance in the area. This proposed sale is consistent with these U.S. objectives and with the 1960 Treaty of Mutual Cooperation and Security.

Japan will use these missiles to update older or less reliable missiles currently in the Japan Maritime Self Defense Force fleet. Japan, which already has STANDARD missiles in its inventory, will have no difficulty absorbing these additional missiles.

The proposed sale of this equipment and support will not affect the basic military balance in the region.

The prime contractor will be Raytheon Missile Systems Company in Tucson, Arizona. There are no offset agreements proposed in connection with this potential sale.

Implementation of this proposed sale will not require the assignment of any additional U.S. Government or contractor representatives to Japan.

There will be no adverse impact on U.S. defense readiness as a result of this proposed sale.

Transmittal No. 02-26

Notice of Proposed Issuance of Letter of Offer Pursuant to Section 36(b)(1) of the Arms Export Control Act

Annex
Item No. vii

(vii) Sensitivity of Technology:

1. The possible sale of STANDARD SM-2 Block IIIA missiles will result in the transfer of sensitive technology and information as well as classified and unclassified defense equipment and technical data. The STANDARD missile guidance section, Target Detecting Device (TDD), warhead, rocket motor, steering control section, safety and arming unit, and auto-pilot battery unit are classified Secret. Certain operating frequencies and performance characteristics are classified Secret. The parametric documents, missile handling procedures, general performance data, firing guidance, dynamics information, and flight analysis procedures of the STANDARD missile documentation are classified up to Confidential.

2. If a technologically advanced adversary were to obtain knowledge of the specific hardware and software elements, the information could be used to develop countermeasures which might reduce weapon system effectiveness or be used in the development of a system with similar or advanced capabilities.

3. A determination has been made that Japan can provide substantially the same degree of protection for the sensitive technology being released as the U.S. Government. This sale is necessary in furtherance of the U.S. foreign policy and national security objectives outlined in the Policy Justification.

[FR Doc. 02–16182 Filed 6–26–02; 8:45 am]
BILLING CODE 5001–08–M

DEPARTMENT OF DEFENSE

GENERAL SERVICES ADMINISTRATION

NATIONAL AERONAUTICS AND SPACE ADMINISTRATION

[OMB Control No. 9000–0068]

Federal Acquisition Regulation; Submission for OMB Review; Economic Price Adjustment

AGENCIES: Department of Defense (DOD), General Services Administration (GSA), and National Aeronautics and Space Administration (NASA).

ACTION: Notice of request for public comments regarding an extension to an existing OMB clearance.

SUMMARY: Under the provisions of the Paperwork Reduction Act of 1995 (44 U.S.C. Chapter 35), the Federal Acquisition Regulation (FAR) Secretariat has submitted to the Office of Management and Budget (OMB) a request to review and approve an extension of a currently approved information collection requirement concerning economic price adjustment. A request for public comments was published in the **Federal Register** at 67 FR 18179, April 15, 2002. No comments were received.

Public comments are particularly invited on: Whether this collection of information is necessary for the proper performance of functions of the FAR, and whether it will have practical utility; whether our estimate of the public burden of this collection of information is accurate, and based on valid assumptions and methodology; ways to enhance the quality, utility, and clarity of the information to be collected; and ways in which we can minimize the burden of the collection of information on those who are to respond, through the use of appropriate technological collection techniques or other forms of information technology.

DATES: Submit comments on or before July 29, 2002.

ADDRESSES: Submit comments regarding this burden estimate or any other aspect of this collection of information, including suggestions for reducing this burden to: FAR Desk Officer, OMB, Room 10102, NEOB, Washington, DC 20503, and a copy to the General Services Administration, FAR Secretariat (MVP), 1800 F Street, NW, Room 4035, Washington, DC 20405. Please cite OMB Control No. 9000–0068, Economic Price Adjustment, in all correspondence.

FOR FURTHER INFORMATION CONTACT: Julia Wise, Acquisition Policy Division, GSA (202) 208–1168.

SUPPLEMENTARY INFORMATION:

A. Purpose

Afixed-price contract with economic price adjustment provides for upward and downward revision of the stated contract price upon occurrence of specified contingencies. In order for the contracting officer to be aware of price changes, the firm must provide pertinent information to the Government. The information is used to determine the proper amount of price adjustments required under the contract.

B. Annual Reporting Burden

Respondents: 5,346.

Responses Per Respondent: 1.

Annual Responses: 5,346.

Hours Per Response: .25.

Total Burden Hours: 1,337.

Obtaining Copies of Proposals

Requesters may obtain a copy of the information collection documents from the General Services Administration, FAR Secretariat (MVP), Room 4035, 1800 F Street, NW, Washington, DC 20405, telephone (202) 501–4755. Please cite OMB Control No. 9000–0068, Economic Price Adjustment, in all correspondence.

Dated: June 18, 2002.

Al Matera,

Director, Acquisition Policy Division.

[FR Doc. 02–15938 Filed 6–26–02; 8:45 am]

BILLING CODE 6820–EP–P

DEPARTMENT OF DEFENSE

Office of the Secretary

Notice of Meeting

AGENCY: Retirement Board of Actuaries, DOD.

ACTION: Notice of meeting.

SUMMARY: A meeting of the Board has been scheduled to execute the provisions of Chapter 74, Title 10, United States Code (10 U.S.C. 1464 *et seq.*). The Board shall review DoD actuarial methods and assumptions to be used in the valuation of the Military Retirement System. Persons desiring to: (1) Attend the DoD Retirement Board of Actuaries meeting or, (2) make an oral presentation or submit a written statement for consideration at the meeting, must notify Inger Pettygrove at (703) 696–7413 by July 24, 2002. Notice of this meeting is required under the Federal Advisory Committee Act.

DATES: September 5, 2002, 1 p.m. to 5 p.m.

ADDRESSES: The Pentagon, Room 1E801.

FOR FURTHER INFORMATION CONTACT: Inger Pettygrove, DoD Office of the Actuary, 1555 Wilson Boulevard, Suite 701, Arlington, VA 22209–2405, (703) 696–7413.

Dated: June 21, 2002.

Patricia L. Toppings,

Alternate OSD Federal Register Liaison Officer, Department of Defense.

[FR Doc. 02–16184 Filed 6–26–02; 8:45 am]

BILLING CODE 5001–08–M

DEPARTMENT OF DEFENSE

Office of the Secretary

Education Benefits Board of Actuaries; Notice of Meeting

AGENCY: DoD.

ACTION: Notice of meeting.

SUMMARY: A meeting of the Board has been scheduled to execute the provisions of Chapter 101, Title 10, United States Code (10 U.S.C. 2006). The Board shall review DoD actuarial methods and assumptions to be used in the valuation of the G.I. Bill. Persons desiring to: (1) Attend the DoD Education Benefits Board of Actuaries meeting or, (2) make an oral presentation or submit a written statement for consideration at the meeting must notify Inger Pettygrove at (703) 696–7413 by July 24, 2002.

Notice of this meeting is required under the Federal Advisory Committee Act.

DATES: September 6, 2002; 10 a.m. to 1 p.m.

ADDRESSES: The Pentagon, Room 1E801.

FOR FURTHER INFORMATION CONTACT: Inger Pettygrove, DoD Office of the Actuary, 1555 Wilson Boulevard, Suite 701, Arlington, VA 22209–2405, (703) 696–7413.

Dated: June 21, 2002.

Patricia L. Toppings,

Alternate OSD Federal Register Liaison Officer, Department of Defense.

[FR Doc. 02–16183 Filed 6–26–02; 8:45 am]

BILLING CODE 5001–08–M

DEPARTMENT OF DEFENSE

Office of the Secretary

Medicare-Eligible Retiree Health Care Board of Actuaries; Notice of Meeting

AGENCY: DoD.

ACTION: Notice of meeting.

SUMMARY: A meeting of the Board has been scheduled to execute the provisions of Chapter 56, Title 10, United States Code (10 U.S.C. 1114 *et seq.*). The Board shall review DoD actuarial methods and assumptions to be used in the valuation of benefits under DoD retiree health care programs for Medicare-eligible beneficiaries. Persons desiring to: (1) Attend the DoD Medicare-Eligible Retiree Health Care Board of Actuaries meeting or, (2) make an oral presentation or submit a written statement for consideration at the meeting, must notify Bill Klunk at (703) 696–7404 by July 12, 2002.

Notice of this meeting is required under the Federal Advisory Committee Act.

DATES: August 23, 2002, 9:30 a.m. to 1 p.m.

ADDRESSES: The Pentagon, Room 1E801.

FOR FURTHER INFORMATION CONTACT: Bill Klunk, DoD Office of the Actuary, 1555 Wilson Boulevard, Suite 701, Arlington, VA 22209–2405, (703) 696–7404.

Dated: June 21, 2002.

Patricia L. Toppings,

Alternate OSF Federal Register Liaison Officer, Department of Defense.

[FR Doc. 02–16185 Filed 6–26–02; 8:45 am]

BILLING CODE 5001–08–M

DEPARTMENT OF DEFENSE

Defense Threat Reduction Agency

Privacy Act of 1974; System of Records

AGENCY: Defense Threat Reduction Agency, DoD.

ACTION: Notice to delete a system of records.

SUMMARY: The Defense Threat Reduction Agency is deleting one system of records notice in its existing inventory of record systems subject to the Privacy Act of 1974, (5 U.S.C. 552a), as amended.

DATES: This proposed action would be effective without further notice on July 29, 2002 unless comments are received which result in a contrary determination.

ADDRESSES: Chief, Information Support Branch, Defense Threat Reduction Agency (ADF), 6801 Telegraph Road, Alexandria, VA 22310–3398.

FOR FURTHER INFORMATION CONTACT: Ms. Sandy Ford at (703) 325–1205.

SUPPLEMENTARY INFORMATION: The Defense Threat Reduction Agency systems of records notices subject to the Privacy Act of 1974, (5 U.S.C. 552a), as amended, have been published in the **Federal Register** and are available from the address above.

The specific changes to the records systems being amended are set forth below followed by the notices, as amended, published in their entirety. The proposed amendments are not within the purview of subsection (r) of the Privacy Act of 1974, (5 U.S.C. 552a), as amended, which requires the submission of a new or altered system report.

Dated: June 21, 2002.

Patricia L. Toppings,

Alternate OSD Federal Register Liaison Officer, Department of Defense.

HDTRA 018

SYSTEM NAME:

Travel Management Program (December 14, 1998, 63 FR 68736).

REASON:

Records are now being maintained under the Defense Finance and Accounting Service system of records T7333, Travel Payment System (August 22, 2000, 65 FR 50973).

[FR Doc. 02–16186 Filed 6–26–02; 8:45 am]

BILLING CODE 5001–08–P

DEPARTMENT OF DEFENSE

Defense Finance and Accounting Service; Privacy Act of 1974; System of Records

AGENCY: Defense Finance and Accounting Service, DoD.

ACTION: Notice of altered System of Records.

SUMMARY: The Defense Finance and Accounting Service proposes to alter an existing system of records notice in its inventory of record systems subject to the Privacy Act of 1974, (5 U.S.C. 552a), as amended. The alteration consists of adding a new routine use to permit the release of information to the Department of the Treasury for administrative wage garnishment.

DATES: This action will be effective without further notice on July 29, 2002, unless comments are received that would result in a contrary determination.

ADDRESSES: FOIA/PA Program Manager, Defense Finance and Accounting Service—Denver Center, Specialized Legal Support Division, Office of General Counsel, 6760 E. Irvington Place, Denver, CO 80279–8000.

FOR FURTHER INFORMATION CONTACT: Ms. Linda Krabbenhoft on (303) 676–7514.

SUPPLEMENTARY INFORMATION: The complete inventory of Defense Finance and Accounting Service records system notices subject to the Privacy Act of 1974 (5 U.S.C. 552a), as amended, have been published in the **Federal Register** and are available from the address above.

The proposed system report, as required by 5 U.S.C. 552a(r) of the Privacy Act of 1974, as amended, was submitted on June 19, 2002, to the House Committee on Government Reform, the Senate Committee on Governmental Affairs, and the Office of Management and Budget (OMB) pursuant to paragraph 4c of Appendix I to OMB Circular No. A–130, 'Federal Agency Responsibilities for Maintaining Records About Individuals,' dated February 8, 1996 (February 20, 1996, 61 FR 6427).

Dated: June 21, 2002.

Patricia L. Toppings,

Alternate OSD Federal Register Liaison Officer, Department of Defense.

T7332

SYSTEM NAME:

Defense Debt Management System (April 8, 1997, 62 FR 16793).

CHANGES:

* * * * *

SYSTEM LOCATION:

Delete entry and replace with 'Defense Finance and Accounting Service-Denver Center, 6760 East Irvington Place, Denver, CO 80279–8000.'

CATEGORIES OF INDIVIDUALS COVERED BY THE SYSTEM:

Delete 'contractors' from entry.

CATEGORIES OF RECORDS IN THE SYSTEM:

First paragraph, first sentence, add 'billing and follow-up' between 'debt' and 'collection'. In second sentence replace 'amount of debt or' with 'original debt principal and the', and add 'late payment charges', and 'due process notice, and records of e-mail, telephone, or written' to entry.

Third paragraph, replace first sentence with 'Correspondence with other Federal agencies requesting administrative offset from payments owed to the debtor.'

Fourth paragraph, add 'U.S. Department of Justice' to entry.

Delete paragraphs six and nine.

* * * * *

PURPOSE(S):

Delete the fourth paragraph.

Delete fifth paragraph and replace with 'To determine the validity of waivers or to make referrals to the Defense Office of Hearings and Appeals (DOHA).'

ROUTINE USES OF RECORDS MAINTAINED IN THE SYSTEM, INCLUDING CATEGORIES OF USERS AND THE PURPOSES OF SUCH USES:

Delete paragraphs five and nine.

Add a new paragraph 'To the U.S. Department of Treasury (DOT) for centralized administrative or salary offset, including the offset of Federal income tax refunds, for the purpose of collecting debts owed the U.S. Government; to the DOT contracted private collection agencies for the purpose of obtaining collection services, including administrative wage garnishment (AWG) in accordance with the Debt Collection Improvement Act of 1996 (Pub. L. 104–134), 31 U.S.C. 3720D, and 31 CFR part 285, to recover moneys owed to the U.S. Government.'

* * * * *

T7332

SYSTEM NAME:

Defense Debt Management System.

SYSTEM LOCATION:

Defense Finance and Accounting Service-Denver Center, 6760 East Irvington Place, Denver, CO 80279–8000.

CATEGORIES OF INDIVIDUALS COVERED BY THE SYSTEM:

Individuals who are indebted to a Department of Defense (DoD) agency that have transferred debts to the Defense Debt Management System serviced by the Defense Finance and Accounting Service.

EXCLUSION:

This system does not include individuals who are indebted to a DoD agency and who have been identified as currently receiving pay from DoD.

CATEGORIES OF RECORDS IN THE SYSTEM:

Information varies depending on the debtor and the related history of debt billing and follow-up collection activity. These records may include name, Social Security Number, mailing address, original debt principal and the delinquent amount, basis of the debt, date debt arose, late payment charges, office referring the debt, collection efforts, credit reports, collection letters, due process notice, and records of e-mail, telephone, or written correspondence to or from the debtor relating to the debt.

Correspondence with other Federal agencies to initiate the collection of debts through voluntary or involuntary offset procedures against the indebted employees' salaries or compensation due a retiree.

Correspondence with other Federal agencies requesting administrative offset from payments owed to the debtor. These records may include individual's name, rank, date of birth, Social Security Number, debt amount, documentation establishing overpayment status, military pay records, financial status affidavits, credit references, and substantiating documents such as military pay orders, pay adjustment authorizations, military master pay account printouts, records of travel payments, financial record data

folders, miscellaneous vouchers, debtor financial records, credit reports, promissory notes, and debtor financial statements.

Information on U.S. Treasury Department, Internal Revenue Service (IRS), U.S. Department of Justice, and U.S. General Accounting Office (GAO) inquiries, judicial proceedings regarding bankruptcy, pay account histories, and token payment information.

Applications for waiver of erroneous payment or for remission of indebtedness with supporting documents including statements of financial status (personal income and expenses), statements of commanders or Defense Accounting Officers, correspondence with debtors, or records of overpayments of Survivor Benefit Plan benefits.

Reports from probate courts regarding the estates of deceased debtors.

Reports from bankruptcy courts regarding claims of the U.S. Government against debtors.

AUTHORITY FOR MAINTENANCE OF THE SYSTEM:

5 U.S.C. 301, Departmental Regulations, 5512, 5513, 5514, and 5584; 10 U.S.C. 1442, 1453, 2774, 2775, 9835; 31 U.S.C. 3325, 3342, 3526, 3701, 3702, 3711, 3716–3718; 32 U.S.C. 710, 716; 37 U.S.C. 1007(c); 40 U.S.C. 721, 723, 725, 726, 727, 728, 729; the Debt Collection Act of 1982 (Pub. L. 97–365, as amended by Pub. L. 104–134, the Debt Collection Improvement Act of 1996); Pub. L. 89–508; E.O. 9397 (SSN); and DoD 7000.14–R, Department of Defense Financial Management Regulation, Volume 5, Part Two.

PURPOSE(S):

To administratively manage the collection of debts owed to the Department of Defense (DoD). These debts include, but are not limited to, past due loan payments, overpayments, fines, interest, penalties, administrative fees, and amounts derived from damages, leases, and sales of real or personal property.

To implement the salary offset provisions of 5 U.S.C. 5514, the administrative offset provisions of 31 U.S.C. 3711 and 3716–3718, and the provisions of the Federal Claims Collection Standards (31 CFR parts 900–904), that apply to personal debts.

To permit collection of delinquent claims and debts owed to the U.S. Government under any program or service administered by any creditor DoD Component.

To determine the validity of waivers or to make referrals to the Defense Office of Hearings and Appeals (DOHA).

To maintain records of investigations conducted for the purpose of confirming, canceling, or determining if the debts are accurate or valid, and whether the debt should be remitted or waived.

All records in this system are subject to use in authorized computer matching programs within DoD and with other Federal agencies or non-Federal agencies as regulated by the Privacy Act of 1974 (5 U.S.C. 552a), as amended.

ROUTINE USES OF RECORDS MAINTAINED IN THE SYSTEM, INCLUDING CATEGORIES OF USERS AND THE PURPOSES OF SUCH USES:

In addition to those disclosures generally permitted under 5 U.S.C. 552a(b) of the Privacy Act, these records or information contained therein may specifically be disclosed outside the DoD as a routine use pursuant to 5 U.S.C. 552a(b)(3) as follows:

To the U.S. General Accounting Office, the U.S. Department of the Justice, Internal Revenue Service, U.S. Department of Treasury, or other Federal agencies for further collection action on any delinquent account when circumstances warrant.

To commercial credit reporting agencies for the purpose of adding debt payment or non-payment data to a credit history file on an individual for use in the administration of debt collection. Delinquent debt information may be furnished for the purpose of establishing an inducement for debtors to pay their obligations to the U.S. Government.

To any Federal agency where the debtor is employed or receiving some type of payment from that agency for the purpose of collecting debts owed the U.S. Government by non-centralized offset. Non-centralized offset encompasses an offset program administered by any Federal agency other than the U.S. Department of Treasury. The agency holding the payment subject to offset will use the indebtedness information for collection purposes after counseling the debtor. The collection may be accomplished either voluntarily or involuntarily by initiating administrative or salary offset procedures under the provisions of the Debt Collection Act of 1982 (Pub. L. 97–365, as amended by Pub. L. 104–134, the Debt Collection Improvement Act of 1996).

To the U.S. Department of Treasury (DOT) for centralized administrative or salary offset, including the offset of Federal income tax refunds, for the purpose of collecting debts owed the U.S. Government; to the DOT contracted private collection agencies for the purpose of obtaining collection services, including administrative wage garnishment (AWG) in accordance with the Debt Collection Improvement Act of 1996 (Pub. L. 104–134), 31 U.S.C. 3720D, and 31 CFR part 285, to recover moneys owed to the U.S. Government.

To the U.S. Department of Veteran Affairs for administration of laws pertaining to veterans' benefits.

To any Federal agency for the purpose of accomplishing the administrative procedures to collect or dispose of a debt owed to the U.S. Government. This includes, but is not limited to, the Office of Personnel Management for personnel management functions and the Internal Revenue Service to obtain a mailing address of a taxpayer for the purpose of locating such taxpayer to collect or compromise a Federal claim against the taxpayer pursuant to 26 U.S.C. 1603(m)(2), and in accordance with 31 U.S.C. 3711, 3217, and 3718. The Internal Revenue Service may also request locator service for delinquent accounts receivable in order to report closed out accounts as taxable income, including amounts compromised or terminated, and accounts barred from litigation due to age.

To any Federal, state, or local agency for the purpose of conducting an authorized computer-matching program to identify and locate delinquent debtors for recoupment of debts owed DoD.

To publish or otherwise publicly disseminate information regarding the identity of the debtor and the existence of the non-tax debt, subject to review by the Secretary of the Treasury.

The DoD 'Blanket Routine Uses' published at the beginning of the DFAS compilation of record system notices also apply to this system.

DISCLOSURE TO CONSUMER REPORTING AGENCIES:

Disclosures pursuant to 5 U.S.C. 552a(b)(12) may be made from this system to 'consumer reporting agencies' as defined in the Fair Credit Reporting Act (15 U.S.C. 1681a(f)) or the Federal Claims Collection Act of 1966 (31 U.S.C. 3701(a)(3)). The purpose of this disclosure is to aid in the collection of outstanding debts owed to the Federal government, typically to provide an incentive for debtors to repay delinquent Federal government debts by making these debts part of their credit records.

The disclosure is limited to information necessary to establish the identity of the individual, including name, address, and taxpayer identification number (Social Security Number); the amount, status, and history of the claim; and the agency or program under which the claim arose for the sole purpose of allowing the

consumer reporting agency to prepare a commercial credit report.

POLICIES AND PRACTICES FOR STORING, RETRIEVING, ACCESSING, RETAINING, AND DISPOSING OF RECORDS IN THE SYSTEM:

STORAGE:

Records are maintained on computer disks, magnetic tape, microfiche, and paper file folders.

RETRIEVABILITY:

Retrieved by name, Taxpayer Identification Number, other identification number or system identifier, or name of accountable disbursing office in whose custody the public funds were entrusted when the debt arose.

SAFEGUARDS:

Records are accessed by the custodian of the record system and by personnel responsible for servicing the record system in performance of their official duties. Records are stored in locked cabinets or rooms, or in guarded buildings.

RETENTION AND DISPOSAL:

All cases will remain active until settled by full payment, waiver, write-off, or close out. The system contains records requiring a retention period of up to 10 years after final action. Records are retired to National Records Centers. Destruction is accomplished by tearing, shredding, pulping, macerating, or burning.

SYSTEM MANAGER(S) AND ADDRESS:

Chief, Debt Management Systems Division, Directorate of Debt and Claims Management, Defense Finance and Accounting Service—Denver Site, 6760 East Irvington Place, Denver, CO 80279–8000.

NOTIFICATION PROCEDURE:

Individuals seeking to determine whether information about themselves is contained in this system should address written inquiries to the Defense Finance and Accounting Service—Denver Site, DFAS–GA/DE, 6760 East Irvington Place, Denver, CO 80279–8000.

The individuals should furnish their name, Social Security Numbers, and reasonably describe the information they are seeking.

RECORD ACCESS PROCEDURES:

Individuals seeking access to information about themselves contained in this system of records should address written inquiries to the Defense Finance and Accounting Service—Denver Site, DFAS–GA/DE, 6760 East Irvington Place, Denver, CO 80279–8000.

The individuals should furnish their name, Social Security Numbers, and reasonably describe the information they are seeking.

CONTESTING RECORD PROCEDURES:

The DFAS rules for accessing records, for contesting contents and appealing initial agency determinations are published in DFAS Regulation 5400.11–R; 32 CFR part 324; or may be obtained from the Privacy Act Officer at any DFAS Center.

RECORD SOURCE CATEGORIES:

Records are obtained from the debtor, DFAS centers, other DoD organizations, and agencies of Federal, state, and local governments, as applicable or appropriate for processing the case.

EXEMPTIONS CLAIMED FOR THE SYSTEM:

None.

[FR Doc. 02–16188 Filed 6–26–02; 8:45 am]

BILLING CODE 5001–08–P

DEPARTMENT OF DEFENSE

Department of the Air Force

Privacy Act of 1974; System of Records

AGENCY: Department of the Air Force, DoD.

ACTION: Notice to delete Systems of Records.

SUMMARY: The Department of the Air Force is deleting four systems of records notices in its existing inventory of record systems subject to the Privacy Act of 1974, (5 U.S.C. 552a), as amended.

DATES: This proposed action would be effective without further notice on July 29, 2002, unless comments are received which result in a contrary determination.

ADDRESSES: Send comments to the Air Force Privacy Act Manager, Office of the Chief Information Officer, AF–CIO/P, 1155 Air Force Pentagon, Washington, DC 20330–1155.

FOR FURTHER INFORMATION CONTACT: Mrs. Anne Rollins at (703) 601–4043.

SUPPLEMENTARY INFORMATION: The Department of the Air Force systems of records notices subject to the Privacy Act of 1974, (5 U.S.C. 552a), as amended, have been published in the **Federal Register** and are available from the address above.

The specific changes to the records systems being amended are set forth below followed by the notices, as amended, published in their entirety. The proposed amendments are not within the purview of subsection (r) of the Privacy Act of 1974, (5 U.S.C. 552a), as amended, which requires the submission of a new or altered system report.

Dated: June 21, 2002.

Patricia L. Toppings,

Alternate OSD Federal Register Liaison Officer, Department of Defense.

F044 AFSG B

SYSTEM NAME:

Bioenvironmental Engineer Personnel Career Information System (June 11, 1997, 62 FR 31793).

Reason: Information is now maintained under the system of records F036 AF PC C, Military Personnel Records System. Therefore, this notice is obsolete.

F044 AF SG P

SYSTEM NAME:

Nursing Skill Inventory (June 11, 1997, 62 FR 31793).

Reason: Records no longer maintained because the requirement was cancelled.

F065 AF SG A

SYSTEM NAME:

Control Logs (June 11, 1997, 62 FR 31793).

Reason: Records no longer exist because requirement was cancelled.

F031 497IG C

SYSTEM NAME:

Security File for Foreign Intelligence Collection (June 11, 1997, 62 FR 31793).

Reason: Records no longer exist; organization deactivated.

[FR Doc. 02–16187 Filed 6–26–02; 8:45 am]

BILLING CODE 5001–08–P

DEPARTMENT OF EDUCATION

Notice of Proposed Information Collection Requests

AGENCY: Department of Education.

SUMMARY: The Leader, Regulatory Information Management Group, Office of the Chief Information Officer, invites comments on the proposed information collection requests as required by the Paperwork Reduction Act of 1995.

DATES: Interested persons are invited to submit comments on or before August 26, 2002.

SUPPLEMENTARY INFORMATION: Section 3506 of the Paperwork Reduction Act of 1995 (44 U.S.C. Chapter 35) requires that the Office of Management and Budget (OMB) provide interested Federal agencies and the public an early

opportunity to comment on information collection requests. OMB may amend or waive the requirement for public consultation to the extent that public participation in the approval process would defeat the purpose of the information collection, violate State or Federal law, or substantially interfere with any agency's ability to perform its statutory obligations. The Leader, Regulatory Information Management Group, Office of the Chief Information Officer, publishes that notice containing proposed information collection requests prior to submission of these requests to OMB. Each proposed information collection, grouped by office, contains the following: (1) Type of review requested, *e.g.,* new, revision, extension, existing or reinstatement; (2) title; (3) summary of the collection; (4) description of the need for, and proposed use of, the information; (5) respondents and frequency of collection; and (6) reporting and/or recordkeeping burden. OMB invites public comment. The Department of Education is especially interested in public comment addressing the following issues: (1) Is this collection necessary to the proper functions of the Department; (2) will this information be processed and used in a timely manner; (3) is the estimate of burden accurate; (4) how might the Department enhance the quality, utility, and clarity of the information to be collected; and (5) how might the Department minimize the burden of this collection on the respondents, including through the use of information technology.

Dated: June 21, 2002.

John Tressler,

Leader, Regulatory Information Management, Office of the Chief Information Officer.

Federal Student Aid

Type of Review: Extension of a currently approved collection.

Title: Application for Approval to Participate in Federal Student Financial Aid Programs.

Frequency: On Occasion Other: Prior to expiration of eligibility.

Affected Public: Businesses or other for-profit; not-for-profit institutions.

Reporting and Recordkeeping Hour Burden:

Responses: 2970.

Burden Hours: 20830.

Abstract: The Higher Education Act of 1965, as amended requires postsecondary institutions to complete and submit this application as a condition of eligibility for any of the Title IV student financial assistance programs and for the other postsecondary programs authorized by the HEA. The institution must submit the form (1) initially when it first seeks to become eligible for the Title IV programs; (2) when its program participation agreement expires (recertification); (3) when it changes ownership, merges, or changes from structure; (4) to be reinstated in the Title IV programs; (5) to notify the Department when it makes certain changes, *e.g.,* name or address; and (5) if it wishes to have a new program (outside its current scope) or new location approved for Title IV purposes.

Requests for copies of the proposed information collection request may be accessed from *http://edicsweb.ed.gov,* by selecting the ''Browse Pending Collections'' link and by clicking on link number 2048. When you access the information collection, click on ''Download Attachments'' to view. Written requests for information should be addressed to Vivian Reese, Department of Education, 400 Maryland Avenue, SW, Room 4050, Regional Office Building 3, Washington, DC 20202–4651 or to the e-mail address *vivian_reese@ed.gov.* Requests may also be electronically mailed to the Internet address *OCIO_RIMG@ed.gov* or faxed to 202–708–9346. Please specify the complete title of the information collection when making your request.

Comments regarding burden and/or the collection activity requirements should be directed to Joe Schubart at (202) 708–9266. Individuals who use a telecommunications device for the deaf (TDD) may call the Federal Information Relay Service (FIRS) at 1–800–877–8339.

Federal Student Aid

Type of Review: New Collection.

Title: Federal Family Education Loan, Direct Loan and Perkins Loan Total Permanent Disability Discharge Form (JS).

Frequency: Other: One time.

Affected Public: Businesses or other for-profit (primary); Individuals or household.

Reporting and Recordkeeping Hour Burden:

Responses: 15000.

Burden Hours: 7500.

Abstract: This form will serve as the means of collecting the information to determine whether a FFEL, Direct Loan, or Perkins Loan borrower qualifies for a conditional discharge of their loan due to total and permanent disability.

Requests for copies of the proposed information collection request may be accessed from *http://edicsweb.ed.gov,* by selecting the ''Browse Pending Collections'' link and clicking on link number 2043. When you access the information collection, click on ''Download Attachments'' to view. Written requests for information should be addressed to Vivian Reese, Department of Education, 400 Maryland Avenue, SW, Room 4050, Regional Office Building 3, Washington, DC 20202–4651 or to the e-mail address *vivian_reese@ed.gov.* Requests may also be electronically mailed to the Internet address *OCIO_RIMG@ed.gov* or faxed to 202–708–9346. Please specify the complete title of the information collection when making your request.

Comments regarding burden and/or the collection activity requirements should be directed to Joe Schubart at (202) 708–9266. Individuals who use a telecommunications device for the deaf (TDD) may call the Federal Information Relay Service (FIRS) at 1–800–877–9339.

[FR Doc. 02–16197 Filed 6–26–02; 8:45 am]

BILLING CODE 4000–01–M

DEPARTMENT OF EDUCATION

Submission for OMB Review; Comment Request

AGENCY: Department of Education.

SUMMARY: The Leader, Regulatory Information Management Group, Office of the Chief Information Officer invites comments on the submission for OMB review as required by the Paperwork Reduction Act of 1995.

DATES: Interested persons are invited to submit comments on or before July 29, 2002.

ADDRESSES: Written comments should be addressed to the Office of Information and Regulatory Affairs, Attention: Karen Lee, Acting Desk Officer, Department of Education, Office of Management and Budget, 725 17th Street, NW., Room 10235, New Executive Office Building, Washington, DC 20503 or should be electronically mailed to the internet address *Karen_F._Lee@omb.eop.gov.*

SUPPLEMENTARY INFORMATION: Section 3506 of the Paperwork Reduction Act of 1995 (44 U.S.C. chapter 35) requires that the Office of Management and Budget (OMB) provide interested Federal agencies and the public an early opportunity to comment on information collection requests. OMB may amend or waive the requirement for public consultation to the extent that public participation in the approval process would defeat the purpose of the information collection, violate State or Federal law, or substantially interfere with any agency's ability to perform its statutory obligations. The Leader,

Regulatory Information Management Group, Office of the Chief Information Officer, publishes that notice containing proposed information collection requests prior to submission of these requests to OMB. Each proposed information collection, grouped by office, contains the following: (1) Type of review requested, e.g. new, revision, extension, existing or reinstatement; (2) Title; (3) Summary of the collection; (4) Description of the need for, and proposed use of, the information; (5) Respondents and frequency of collection; and (6) Reporting and/or Recordkeeping burden. OMB invites public comment.

Dated: June 21, 2002.

John D. Tressler,

Leader, Regulatory Information Management, Office of the Chief Information Officer.

Office of Educational Research and Improvement

Type of Review: Reinstatement, with change, of a previously approved collection for which approval has expired.

Title: 2004 National Survey of Postsectondary Faculty (NSOPF:04): List Collection Procedures and Institution Questionnaire (KA).

Frequency: Other: One time.

Affected Public: Not-for-profit institutions (primary).

Reporting and Recordkeeping Hour Burden:

Response: 100.

Burden Hours: 446.

Abstract: The fourth cycle of the NSOPF is being conducted in response to a continuing need for data on faculty and instructors. The study will provide information about faculty in postsecondary institutions, which is key to learning about the quality of education and research in these institutions. This study will expand the information about faculty and instructional staff in two ways: allowing comparisons to be made over time and examining critical issues surrounding faculty that have developed since the first three studies. This clearance request covers field test and full scale activities for the first phase of the study—collection of lists of current faculty an instructors from sampled postsecondary institutions and a questionnaire to be completed by institution administrative officials to provide information about the context of the institution, such as hiring and promotion practices, policies on benefits, tenure, workload, etc. A second clearance request will be submitted shortly covering the faculty survey materials.

Requests for copies of the submission for OMB review; comment request may be accessed from *http://ediscweb.ed.gov,* by selecting the ''Browse Pending Collections'' link and by clicking on link number 2001. When you access the information collection, click on ''Download Attachments'' to view. Written requests for information should be addressed to Vivian Reese, Department of Education, 400 Maryland Avenue, SW., Room 4050, Regional Office Building 3, Washington, DC 20202–4651 or to the e-mail address *vivan.reese.@ed.gov.* Requests may also be electronically mailed to the internet address *OCIO_RIMG@ed.gov* or faxed to 202–708–9346. Please specify the complete title of this information collection when making your request.

Comments regarding burden and/or the collection activity requirements be directed to Kathy Axt at her internet address *Kathy.Axt@ed.gov.* Individuals who use a telecommunications device for the deaf (TDD) may call the Federal Information Relay Service (FIRS) at 1–800–877–8339.

Office of Civil Rights

Type of Review: Reinstatement.

Title: 2002 Elementary and Secondary School Survey (also referred to as the Elementary and Secondary School Civil Rights Compliance Report).

Frequency: Biennially.

Affected Public: State, local, or tribal gov't; SEAs or LEAs.

Reporting and Recordkeeping Hour Burden:

Responses: 33,000.

Burden Hours: 337,500.

Abstract: The Elementary and Secondary School Survey (E&S Survey) is a biennial survey which collects data from schools and school districts on issues of interest to the Office for Civil Rights, U.S. Department of Education. The E&S Survey is the instrument used by OCR to obtain trend data regarding the nation's public elementary and secondary schools. Data from the survey is used by social scientists conducting research on discrimination, and by civil rights and other groups monitoring issues related to their programs. The survey collects data related to Title VI of the Civil Rights Act of 1964 (which prohibits discrimination on the basis of race, color, or national origin), Title IX of the Education Amendments of 1972 (which prohibits discrimination on the basis of sex) and Section 504 of the Rehabilitation Act of 1973 (which prohibits discrimination on the basis of handicap).

On January 17, 2002 a Notice of Proposed Information Collection and request for public comment for the Fall 2002 Elementary and Secondary Civil Rights Compliance Report was published in the **Federal Register**. That proposed data collection included three new tables regarding the collection of student performance assessment data. The Department is no longer proposing to collect this data as part of the 2002 Elementary and Secondary Civil Rights Compliance Report which has been revised accordingly.

Requests for copies of the submissions for OMB review; comment request may be accessed from *http://edicsweb.ed.gov,* by selecting the ''Browse Pending Collections'' link and by clicking on link number 1902. When you access the information collection, click on ''Download Attachments'' to view. Written requests for information should be addressed to Vivian Reese, Department of Education, 400 Maryland Avenue, SW., Room 4050, Regional Office Building 3, Washington, DC 20202–4651 or to the e-mail address *vivan.reese@ed.gov.* Requests may also be electronically mailed to the internet address *OCIO_RIMG@ed.gov* or faxed to 202–708–9346. Please specify the complete title of the information collection when making your request.

Comments regarding burden and/or the collection activity requirements should be directed to Jacqueline Montague at her internet address *Jackie.Montague@ed.gov.* Individuals who use a telecommunications device for the deaf (TDD) may call the Federal Information Relay Service (FIRS) at 1–800–877–8339.

[FR Doc. 02–16196 Filed 6–26–02; 8:45 am]

BILLING CODE 4000–01–M

DEPARTMENT OF EDUCATION

[CFDA No.: 84.206A]

Office of Elementary and Secondary Education

Jacob K. Javits Gifted and Talented Students Education Program; Notice Inviting Applications for New Awards for Fiscal Year (FY) 2002; Correction

On May 24, 2002, we published a notice in the **Federal Register** (67 FR 36583 through 36586) inviting applications for new awards for the Jacob K. Javits Gifted and Talented Students Education Program, with a Deadline for Intergovernmental Review Date of June 24, 2002. The Deadline for Intergovernmental Review Date of ''June 24, 2002'' is corrected to read ''August 7, 2002''.

FOR APPLICATIONS AND FURTHER INFORMATION CONTACT: Emily McAdams, U.S. Department of Education, Room

5W252, 400 Maryland Avenue, SW, Washington, DC 20202. Telephone: (202) 260–8753 or the following e-mail or Internet address: *emily.mcadams@ed.gov*

If you use a telecommunications device for the deaf (TDD), you may call the Federal Information Relay service (FIRS) at 1–80–877.8339.

Individuals with disabilities may obtain this document in an alternative format (e.g., Braille, large print, audiotape, or computer diskette) on request to the contact person listed.

Electronic Access to This Document

You may view this document, as well as all other Department of Education documents published in the **Federal Register**, in text or Adobe Portable Document Format (PDF) on the Internet at the following site: *www.ed.gov/legislation/FedRegister*

To use PDF you must have the Adobe Acrobat Reader, which is available free at this site. If you have questions about using PDF, call the U.S. Government Printing Office (GPO) toll free, at 1–888–293–6498; or in the Washington, DC area at (202) 512–1530.

Note: The official version of this document is the document published in the **Federal Register**. Free Internet access to the official edition of the **Federal Register** and the Code of Federal Regulations is available on GPO Access at: *http://www.access.gpo.gov/nara/index/html.*

Program Authority: 20 U.S.C. 7253 *et seq.*

Dated: June 24, 2002.

Susan B. Neuman,

Assistant Secretary for Elementary and Secondary Education.

[FR Doc. 02–16344 Filed 6–26–02; 8:45 am]

BILLING CODE 4000–01–P

DEPARTMENT OF EDUCATION

National Committee on Foreign Medical Education and Accreditation; Meeting

AGENCY: National Committee on Foreign Medical Education and Accreditation, Department of Education.

What Is the Purpose of This Notice?

The purpose of this notice is to announce the upcoming meeting of the National Committee on Foreign Medical Education and Accreditation. Parts of this meeting will be open to the public, and the public is invited to attend those portions.

When and Where Will the Meeting Take Place?

We will hold the public meeting on September 5, 2002 beginning at 9 a.m. in Mt. Vernon Room at The Wyndham City Center Hotel, 1143 New Hampshire Avenue, NW, Washington, DC 20037. You may call the hotel at (202) 775–0800 or fax the hotel at (202) 887–9171 to inquire about room accommodations.

What Assistance Will Be Provided to Individuals With Disabilities?

The meeting site is accessible to individuals with disabilities. If you will need an auxiliary aid or service to participate in the meeting (*e.g.,* interpreting service, assistive listening device, or materials in an alternate format) notify the contact person listed in this notice at least two weeks before the scheduled meeting date. Although we will attempt to meet a request received after that date, we may not be able to make available the requested auxiliary aid or service because of insufficient time to arrange it.

Who Is the Contact Person for the Meeting?

Please contact Ms. Bonnie LeBold, the Executive Director of the National Committee on Foreign Medical Education and Accreditation, if you have questions about the meeting. You may contact her at the U.S. Department of Education, room 7007, MS 7563, 1990 K St. NW., Washington, DC 20006, telephone: (202) 219–7009, fax: (202) 219–7008, e-mail: *Bonnie.LeBold@ed.gov.*

Individuals who use a telecommunications device for the deaf (TDD) may call the Federal Information Relay Service at 1–800–877–8339.

What Are the Functions of the National Committee?

The National Committee on Foreign Medical Education and Accreditation was established by the Secretary of Education under section 102 of the Higher Education Act of 1965, as amended. The Committee's responsibilities are to:

- Evaluate the standards of accreditation applied to applicant foreign medical schools; and
- Determine the comparability of those standards to standards for accreditation applied to United States medical schools.

What Items Will Be on the Agenda for Discussion at the Meeting?

The National Committee on Foreign Medical Education and Accreditation will review the standards of accreditation applied to medical schools by several foreign countries to determine whether those standards are comparable to the standards of accreditation applied to medical schools in the United States. Discussions of the standards of accreditation will be held in sessions open to the public. Discussions that focus on specific determinations of comparability are closed to the public in order that each country may be properly notified of the decision. The countries tentatively scheduled to be discussed at the meeting include Belize, Costa Rica, Dominican Republic, Israel, Mexico, the Philippines, Poland, St. Lucia, St. Maarten, Sweden, and the United Kingdom. Beginning August 22, you may call the contact person listed above to obtain the final listing of the countries whose standards will be discussed during this meeting. The listing of countries will also be posted on the Department of Education's Web site at the following address: *http://www.ed.gov/offices/OPE/accreditation/ncfmeetings.html.*

How May I Obtain Electronic Access to This Document?

You may view this document, as well as all other Department of Education documents published in the **Federal Register**, in text or Adobe Portable Document Format (PDF) on the Internet at the following site: *http://www.ed.gov/legislation/FedRegister.*

To use PDF you must have Adobe Acrobat Reader, which is available free at this site. If you have questions about using PDF, call the U.S. Government Printing Office (GPO), toll free, at 1–888–293–6498; or in the Washington, DC, area at (202) 512–1530.

Note: The official version of this document is the document published in the **Federal Register**. Free Internet access to the official edition of the **Federal Register** and the Code of Federal Regulations is available on GPO Access at: *http://www.access.gpo.gov/nara/index.html.*

Authority: 5 U.S.C. Appendix 2.

Dated: June 20, 2002.

Sally L. Stroup,

Assistant Secretary for Postsecondary Education.

[FR Doc. 02–16233 Filed 6–26–02; 8:45 am]

BILLING CODE 4000–01–P

DEPARTMENT OF ENERGY

Office of Los Alamos Site Operations, National Nuclear Security Administration; Notice of Floodplain Involvement for the Proposed Future Disposition of Certain Cerro Grande Fire Flood and Sediment Retention Structures at Los Alamos National Laboratory, Los Alamos, NM

AGENCY: National Nuclear Security Administration, Office of Los Alamos Site Operations, DOE.

ACTION: Notice of floodplain involvement.

SUMMARY: The Department of Energy (DOE), National Nuclear Security Administration (NNSA), Office of Los Alamos Site Operations proposes to demolish the above ground portions of two structures built to retain or divert flood waters at Los Alamos National Laboratory (LANL) and retain five others intact with continuing maintenance, which could include periodic sediment removal actions; these structures were constructed in the wake of the Cerro Grande Fire in 2000 as emergency actions to address post fire danger to LANL facilities from floods and sediment movement. All of these structures are located in floodplains; one structure that is being proposed for remaining intact, the Los Alamos Canyon gabion weir, is associated with an area that might develop into a wetland. In accordance with 10 CFR part 1022, DOE has prepared a floodplain/wetland assessment and will perform this proposed action in a manner so as to avoid or minimize potential harm to or within the affected floodplain.

DATES: Comments are due to the address below no later than July 12, 2002.

ADDRESSES: Written comments should be addressed to: Elizabeth Withers, Department of Energy, National Nuclear Security Administration, Los Alamos Area Office, 528 35th Street, Los Alamos, NM 87544, or submit them to the Mail Room at the above address between the hours of 8 a.m. and 4:30 p.m., Monday through Friday. Written comments may also be sent electronically to: *ewithers@doeal.gov* or by facsimile to (505) 667–9998.

FOR FURTHER INFORMATION CONTACT: Karen Agogino, Department of Energy, National Nuclear Security Administration, Albuquerque Field Office, Pennsylvania and H Street, Kirtland Air Force Base, Albuquerque, NM 87116. Telephone (505) 845–6100, facsimile (505) 284–7107.

For Further Information on General DOE Floodplain Environmental Review Requirements, contact: Carol M. Borgstrom, Director, Office of NEPA Policy and Compliance, EH–42, Department of Energy, 100 Independence Avenue, SW., Washington DC 20585–0119. Telephone (202) 586–4600 or (800) 472–2756, facsimile (202) 586–7031.

SUPPLEMENTARY INFORMATION: NNSA constructed several permanent flood and sediment retention structures within various canyons across LANL during the four months immediately following the devastating Cerro Grande Fire that occurred in mid-2000. These structures and their locations are as follows:

- A substantial concrete flood retention structure and a steel flood diversion wall were built within Pajarito Canyon;
- A low-head rock gabion weir together with a sediment detention basin were built in Los Alamos Canyon;
- Four concrete road reinforcement areas were built along State Road 501 and Anchor Ranch Road at their crossings of Two-Mile, Pajarito and Water Canyons; and
- Reinforcements were made to the Los Alamos Canyon Reservoir near the head of Los Alamos Canyon [note: the Reservoir is located on property administered by the U.S. Department of Agriculture, Forest Service, Santa Fe National Forest and is not subject to DOE's current proposal].

These structures, along with other various actions and activities taken to extinguish the fire and as recovery actions in the wake of the fire were subject to the emergency provisions of the National Environmental Policy Act (NEPA); a Special Environmental Analysis (DOE/SEA–03) was prepared to analyze the impacts of the actions taken by NNSA rather than normal NEPA documents. However, the ultimate disposition of these permanent structures was not identified and analyzed in the Special Environmental Analysis issued in September 2000. The disposition of the seven permanent structures located within the boundaries of LANL is the subject of a separate NEPA Environmental Assessment (EA). NNSA's proposed disposition action for these seven structures is to partially breach the above ground portions of the flood retention structure in Pajarito Canyon, remove the above ground portions of the steel flood diversion wall in Pajarito Canyon, and retain the remaining five structures intact and continue to routinely maintain these structures into the foreseeable future (which is defined for the purposes of this proposal as being the next ten years). Routine maintenance of these structures may include accumulated sediment removal. Other alternatives considered are the No Action Alternative (consisting of the retention of all the structures intact with on-going continuation of routine maintenance) and the Disassembly of All Structures Alternative (consisting of the demolition of all above ground portions of all the subject structures).

In accordance with DOE regulations for compliance with floodplain and wetlands environmental review requirements (10 CFR part 1022), NNSA has also prepared a floodplain/wetland assessment for this action, which is part of the NEPA draft EA. The draft EA (containing the floodplain/wetland assessment) is available by contacting Elizabeth Withers at the previously identified addresses, phone and facsimile numbers. The draft EA (containing the floodplain/wetland assessment) is also available for review at the DOE Reading Room at the Los Alamos Outreach Center, 1619 Central Avenue, Los Alamos, NM 878544; and the DOE Reading Room at the Zimmerman Library, University of New Mexico, Albuquerque, NM 87131. The NNSA will publish a floodplain statement of findings for this project in the **Federal Register** no sooner than July 12, 2002.

Issued in Los Alamos, NM, on June 20, 2002.

E. Dennis Martinez,

Acting Director, U.S. Department of Energy, National Nuclear Security Administration, Office of Los Alamos Site Operations.

BILLING CODE 6450–01–P

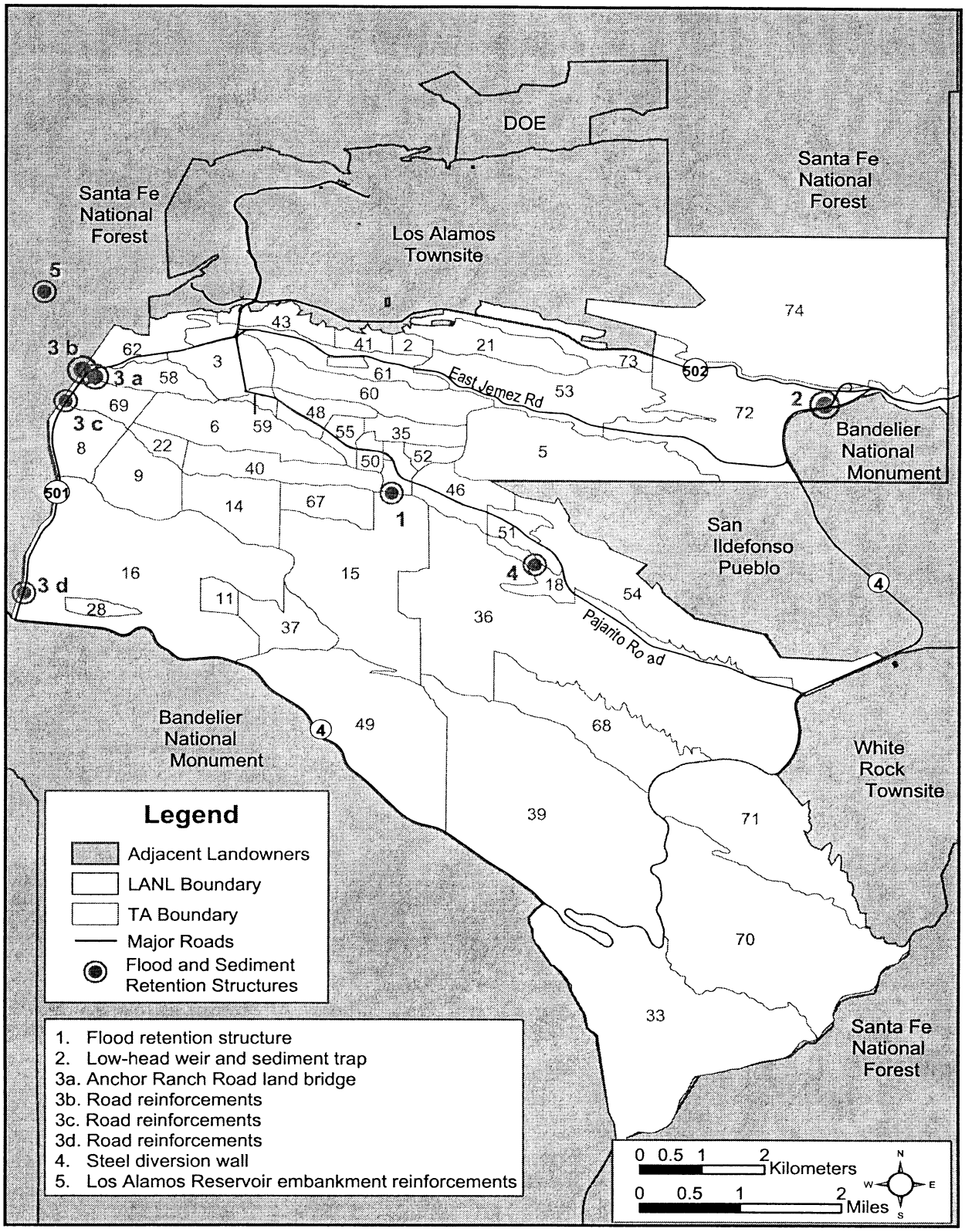

Figure 1. Location of certain flood and sediment retention structures within LANL

[FR Doc. 02–16240 Filed 6–26–02; 8:45 am]
BILLING CODE 6450–01–C

DEPARTMENT OF ENERGY

National Nuclear Security Administration, Office of Los Alamos Site Operations; Notice of Floodplain Involvement for the Construction and Operation of a 12-inch Natural Gas Pipeline in Los Alamos Canyon at Los Alamos National Laboratory, Los Alamos, NM

AGENCY: National Nuclear Security Administration, Office of Los Alamos Site Operations, Department of Energy.

ACTION: Notice of floodplain involvement.

SUMMARY: The National Nuclear Security Administration (NNSA), Office of Los Alamos Site Operations at the Department of Energy (DOE), plans to grant an easement to the Public Service Company of New Mexico (PNM) to construct, operate, and maintain a 15,000 foot, 12-inch diameter natural gas transmission line on DOE-owned land at Los Alamos National Laboratory (LANL). The new gas line would begin at an existing valve station at the bottom of Los Alamos Canyon, cross under the streambed to avoid encroaching on wetlands, and continue upstream for about two miles. The gas line would then cross back under the stream to connect with an existing gas line. The proposed easement would be 50 feet wide and would parallel an existing electric power line. Portions of the gas line will be constructed in the 100-year floodplain of Los Alamos Canyon, as identified in the location map.

In accordance with 10 CFR part 1022, NNSA has prepared a floodplain/wetland assessment and will perform this proposed action in a manner so as to avoid or minimize potential harm to or within the affected floodplain.

DATES: Comments are due to the address below no later than July 12, 2002.

ADDRESSES: Written comments should be addressed to: Elizabeth Withers, Department of Energy, National Nuclear Security Administration, Office of Los Alamos Site Operations, 528 35th Street, Los Alamos, NM 87544, or submit them to the Mail Room at the above address between the hours of 8 a.m. and 4:30 p.m., Monday through Friday. Written comments may also be sent electronically to: *ewithers@doeal.gov* or by facsimile to (505) 667–9998.

FOR FURTHER INFORMATION CONTACT: Milton West, Department of Energy, National Nuclear Security Administration, Albuquerque Operations Office, P.O. Box 5400, Building 388, Albuquerque, New Mexico 87185–5400. Telephone (505) 845–4452, facsimile (505) 284–7191.

For further information on General DOE Floodplain Environmental Review Requirements, contact: Carol M. Borgstrom, Director, Office of NEPA Policy and Compliance, EH–42, Department of Energy, 1000 Independence Avenue, SW., Washington DC 20585–0119. Telephone (202) 586–4600 or (800) 472–2756, facsimile (202) 586–7031.

SUPPLEMENTARY INFORMATION: In August 2001, NNSA considered a proposal for constructing a new 12-inch natural gas pipeline to provide additional natural gas capacity to Los Alamos County and LANL. A 50-foot right-of-way would be cleared along the length of the easement to facilitate construction and operation of the gas line. The proposed project would be located at the bottom of Los Alamos Canyon parallel to an intermittent stream and along an existing electric power line. Stream crossings would be accomplished by tunneling under the streambed to avoid wetland areas. Portions of the gas line construction would occur in the 100-year floodplain. The floodplain/wetlands assessment will discuss engineering best management practices that will be implemented to control erosion and sedimentation from the construction activities. Construction of the gas pipeline would begin in the spring of 2003 and be completed in approximately six months.

In accordance with DOE regulations for compliance with floodplain and wetlands environmental review requirements (10 CFR part 1022), NNSA has prepared a floodplain/wetland assessment for this action, which is available by contacting Elizabeth Withers at the previously identified addresses, phone and facsimile numbers. The floodplain/wetland assessment is available for review at the DOE Reading Room at the Los Alamos Outreach Center, 1619 Central Avenue, Los Alamos, NM 87544; and the DOE Reading Room at the Zimmerman Library, University of New Mexico, Albuquerque, NM 87131. The NNSA will publish a floodplain statement of findings for this project in the **Federal Register** no sooner than July 12, 2002.

Issued in Los Alamos, NM, on June 20, 2002.

E. Dennis Martinez,

Acting Director, U. S. Department of Energy, National Nuclear Security Administration, Office of Los Alamos Site Operations.

BILLING CODE 6450–01–P

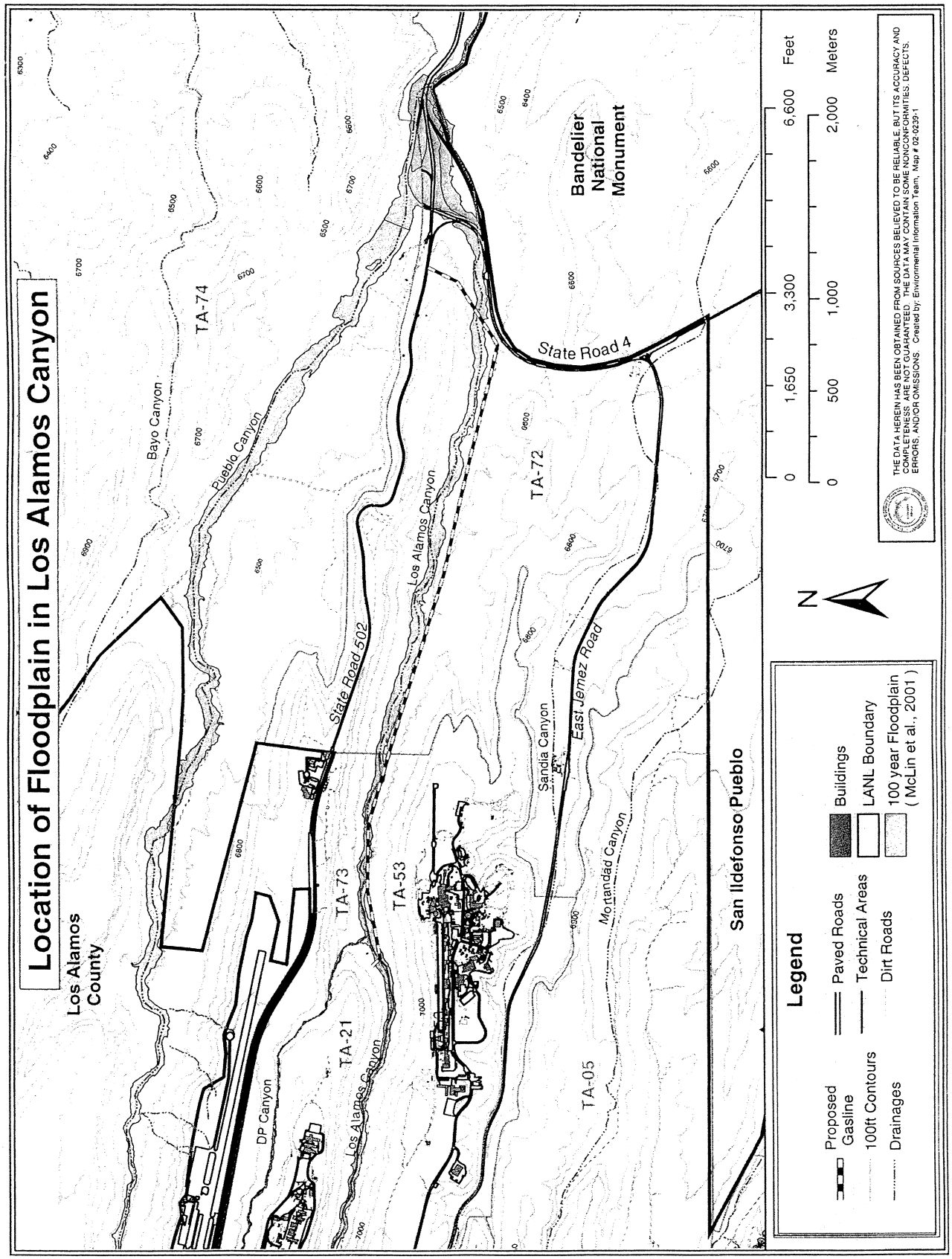
Location of Floodplain in Los Alamos Canyon
Los Alamos County
Bayo Canyon
Pueblo Canyon
TA-74
TA-73
TA-21
TA-53
TA-72
TA-05
DP Canyon
Los Alamos Canyon
State Road 502
State Road 4
East Jemez Road
Sandia Canyon
Mortandad Canyon
Bandelier National Monument
San Ildefonso Pueblo
Legend
Proposed Gasline
100ft Contours
Drainages
Paved Roads
Technical Areas
Dirt Roads
Buildings
LANL Boundary
100 year Floodplain (McLin et al., 2001)
0 1,650 3,300 6,600 Feet
0 500 1,000 2,000 Meters
N
THE DATA HEREIN HAS BEEN OBTAINED FROM SOURCES BELIEVED TO BE RELIABLE, BUT ITS ACCURACY AND COMPLETENESS ARE NOT GUARANTEED. THE DATA MAY CONTAIN SOME NONCONFORMITIES, DEFECTS, ERRORS, AND/OR OMISSIONS. Created by: Environmental Information Team, Map # 02-0239-1

[FR Doc. 02–16241 Filed 6–26–02; 8:45 am]

BILLING CODE 6450–01–C

DEPARTMENT OF ENERGY

Environmental Management Site-Specific Advisory Board, Oak Ridge Reservation

AGENCY: Department of Energy.

ACTION: Notice of open meeting.

SUMMARY: This notice announces a meeting of the Environmental Management Site-Specific Advisory Board (EM SSAB), Oak Ridge. The Federal Advisory Committee Act (Pub. L. 92–463, 86 Stat. 770) requires that public notice of these meetings be announced in the **Federal Register**.

DATES: Wednesday, July 10, 2002, 6 p.m.–9:30 p.m.

ADDRESSES: DOE Information Center, 475 Oak Ridge Turnpike, Oak Ridge, TN.

FOR FURTHER INFORMATION CONTACT: Pat Halsey, Federal Coordinator, Department of Energy Oak Ridge Operations Office, P.O. Box 2001, EM–922, Oak Ridge, TN 37831. Phone (865) 576–4025; Fax (865) 576–5333 or E-mail: *halseypj@oro.doe.gov.*

SUPPLEMENTARY INFORMATION: *Purpose of the Board:* The purpose of the Board is to make recommendations to the Department of Energy and its regulators in the areas of environmental restoration, waste management, and related activities.

Tentative Agenda:

1. A presentation on the Oak Ridge Reservation Land Use Planning Process will be provided by Ms. Pat Parr, Project Manager, Oak Ridge National Laboratory.
2. Comments from the Deputy Designated Federal Official and Ex-officio
3. Motions and recommendations for consideration for Board approval.
4. Public comment period

Public Participation: The meeting is open to the public. Written statements may be filed with the Committee either before or after the meeting. Individuals who wish to make oral statements pertaining to agenda items should contact Pat Halsey at the address or telephone number listed above. Requests must be received five days prior to the meeting and reasonable provision will be made to include the presentation in the agenda. The Deputy Designated Federal Officer is empowered to conduct the meeting in a fashion that will facilitate the orderly conduct of business. Each individual wishing to make public comment will be provided a maximum of five minutes to present their comments at the end of the meeting.

Minutes: Minutes of this meeting will be available for public review and copying at the Department of Energy's Information Resource Center at 105 Broadway, Oak Ridge, TN between 7:30 a.m. and 5:30 p.m. Monday through Friday, or by writing to Pat Halsey, Department of Energy Oak Ridge Operations Office, P.O. Box 2001, EM–922, Oak Ridge, TN 37831, or by calling her at (865) 576–4025.

Issued at Washington, DC on June 20, 2002.

Belinda G. Hood,

Acting Deputy Advisory Committee Management Officer.

[FR Doc. 02–16242 Filed 6–26–02; 8:45 am]

BILLING CODE 6450–01–P

DEPARTMENT OF ENERGY

Federal Energy Regulatory Commission

[Docket Nos. CP97–319–004 and CP97–315–006]

ANR Pipeline Company, Independence Pipeline Company; Errata Notice

June 19, 2002.

On June 19, 2002, the Commission issued a notice of its June 26, 2002 meeting. Item No. C–8 lists ''Docket No. CP97–319–004, ANR Pipeline Company''. Item No. C–8 should also include Docket No. CP97–315–006, Independence Pipeline Company.

Magalie R. Salas,

Secretary.

[FR Doc. 02–16151 Filed 6–26–02; 8:45 am]

BILLING CODE 6717–01–P

DEPARTMENT OF ENERGY

Federal Energy Regulatory Commission

[Docket No. CP02–386–000]

MDU Resources Group, Inc.; Notice of Application

June 21, 2002.

Take notice that on June 12, 2002, MDU Resources Group, Inc.(MDU), 918 East Divide Avenue, Bismarck, North Dakota 58506, filed in Docket No. CP02–386–000 , an application pursuant to Section 7(f) of the Natural Gas Act (NGA) for a determination of a service area, a declaration that MDU qualifies as a local distribution company (LDC) and a waiver of the regulatory requirements under the NGA and the Natural Gas Policy Act (NGPA), all as more fully set forth in the application which is on file with the Commission and open to public inspection. Copies of this filing are on file with the Commission and are available for public inspection. This filing may be viewed on the web at *http://www.ferc.gov* using the ''RIMS'' link, select ''Docket #'' from the RIMS Menu and follow the instructions (call (202) 208–2222 for assistance).

MDU requests a service area determination for the area it serves in Otter Tail and Wilkin Counties, Minnesota, and Richland County, North Dakota in order to be able to enlarge or extend its facilities for the purpose of supplying increased market demands without the need to apply to the Commission for further authorization. MDU also requests a declaration that it qualifies as an LDC in the service area to be determined for the purposes of section 311 of the NGPA. In addition, MDU requests a waiver of the regulatory requirements ordinarily applicable to natural gas companies under the NGA and the NGPA. It is asserted that MDU's operations are almost entirely in intrastate commerce, with the exception of a small portion extending across the Minnesota-North Dakota border in order to serve the Richland County market. It is stated that MDU's services and rates are regulated by the Minnesota Public Utilities Commission and the North Dakota Public Service Commission.

Any questions regarding this amendment should be directed to Douglas W. Schultz, Senior Attorney, MDU Resources Group, Inc., at (701) 222–7613.

There are two ways to become involved in the Commission's review of this project. First, any person wishing to obtain legal status by becoming a party to the proceedings for this project should, on or before July 12, 2002, file with the Federal Energy Regulatory Commission, 888 First Street, NE, Washington, DC 20426, a motion to intervene in accordance with the requirements of the Commission's Rules of Practice and Procedure (18 CFR 385.214 or 385.211) and the Regulations under the NGA (18 CFR 157.10). A person obtaining party status will be placed on the service list maintained by the Secretary of the Commission and will receive copies of all documents filed by the applicant and by all other parties. A party must submit 14 copies of filings made with the Commission and must mail a copy to the applicant and to every other party in the proceeding. Only parties to the proceeding can ask for court review of Commission orders in the proceeding.

However, a person does not have to intervene in order to have comments considered. The second way to participate is by filing with the Secretary of the Commission, as soon as possible, an original and two copies of comments in support of or in opposition to this project. The Commission will consider these comments in determining the appropriate action to be taken, but the filing of a comment alone will not serve to make the filer a party to the proceeding. The Commission's rules require that persons filing comments in opposition to the project provide copies of their protests only to the party or parties directly involved in the protest.

Comments, protests and interventions may be filed electronically via the Internet in lieu of paper. See, 18 CFR 385.2001(a)(1)(iii) and the instructions on the Commission's web site under the ''e-Filing'' link.

If the Commission decides to set the application for a formal hearing before an Administrative Law Judge, the Commission will issue another notice describing that process. At the end of the Commission's review process, a final Commission order approving or denying a certificate will be issued.

Linwood A. Watson, Jr.,

Deputy Secretary.

[FR Doc. 02–16248 Filed 6–26–02; 8:45 am]

BILLING CODE 6717–01–P

DEPARTMENT OF ENERGY

Federal Energy Regulatory Commission

[Docket No. EG02–156–000, et al.]

Mt. Camel Cogen, Inc., et al.; Electric Rate and Corporate Regulation Filings

June 20, 2002.

The following filings have been made with the Commission. The filings are listed in ascending order within each docket classification.

1. Mt. Carmel Cogen, Inc.

[Docket No. EG02–156–000]

Take notice that on June 18, 2002, Mt. Carmel Cogen, Inc. (Mt. Carmel), a Delaware corporation with its principal place of business in Mount Carmel, Northumberland County, Pennsylvania, filed with the Federal Energy Regulatory Commission (Commission), an application for determination of exempt wholesale generator status pursuant to Part 365 of the Commission's regulations.

Mt. Carmel owns and operates a 45-MW power generation facility located in Mount Carmel, Pennsylvania. (the Facility). Mt. Carmel states that electric energy produced from the Facility will be sold by Mt. Carmel to the wholesale power market in the PJM.

Comment Date: July 11, 2002.

2. Carthage Energy, LLC

[Docket No. ER99–2541–003]

Take notice that on June 14, 2002, Carthage Energy LLC (Carthage Energy) tendered a letter concerning its triennial market power review pursuant to an order issued by the Commission in Docket No. ER99–2541 on June 17, 1999 granting Carthage Energy market-based rate authorization.

Comment Date: July 8, 2002.

3. Cleco Power LLC, Cleco Marketing & Trading LLC, Cleco Evangeline LLC, Perryville Energy Partners, L.L.C., Acadia Power Partners LLC

[Docket Nos. ER99–3855–002, ER99–2300–004, ER99–2928–001, ER01–1397–002, and ER 02–1406–001]

Take notice that on June 17, 2002, Cleco Corporation, on behalf of its public utility affiliates, Cleco Power LLC, Cleco Marketing & Trading LLC, Cleco Evangeline LLC, Perryville Energy Partners, L.L.C., and Acadia Power Partners LLC, tendered for filing a combined notification of change in status and a three-year updated generation market analysis regarding the market-based rate schedules approved in the following orders: Cleco Power LLC, October 8, 1996, in Docket No. ER96–2677–000 for Cleco Power's predecessor-in-interest Central Louisiana Electric Company, Inc., Cleco Marketing & Trading LLC, 87 FERC 62,313 (1999); Cleco Evangeline LLC, 88 FERC 61,005 (1999); Perryville Energy Partners, L.L.C., Docket No. ER01–1397–000, issued May 3, 2001; Acadia Power Partners LLC, Docket No. ER02–1406–000, issued May 28, 2002.

Comment Date: July 8, 2002.

4. American Electric Power Service Corporation

[Docket Nos. ER00–2413–007]

Take notice that on June 17, 2002, American Electric Power Service Corporation, on behalf of the operating companies of the American Electric Power System (collectively AEP) filed proposed amendments to its Open Access Transmission Tariff in compliance with the Commission's May 16, 2002 Order in the above-referenced dockets.

AEP requests an effective date of June 1, 2002 for the proposed amendments. Copies of AEP's filing have been served upon AEP's transmission customers and the public service commissions of Arkansas, Indiana, Kentucky, Louisiana, Michigan, Ohio, Oklahoma, Tennessee, Texas, Virginia and West Virginia.

Comment Date: July 8, 2002.

5. BP Energy Company

[Docket No. ER00–3614–002]

Take notice that on June 17, 2002, BP Energy Company tendered for filing an updated market study in compliance with the Commission's Order in Cleco Trading & Marketing, LLC, et al., 87 FERC (CCH) ¶ 61, 311 (1999).

Comment Date: July 8, 2002.

6. Southern Company Services, Inc.

[Docket No. ER02–851–005]

Take notice that on May 1, 2002, Southern Company Services, Inc., acting as agent for Alabama Power Company, Georgia Power Company, Gulf Power Company, Mississippi Power Company, and Savannah Electric and Power Company (collectively Southern Companies) are filing informational data inputs to the formula rate adopted by Southern Companies and thereby establish updated charges for the use of their bulk transmission facilities under their Open Access Transmission Tariff, FERC Electric Tariff, Fourth Revised Volume No. 5.

Comment Date: July 11, 2002.

7. Midwest Independent Transmission System Operator, Inc.

[Docket No. ER02–1420–002]

Take notice that on June 17, 2002, the Southwestern Electric Power Company and Public Service Company of Oklahoma, operating companies of the American Electric Power System, filed a letter advising the Federal Energy Regulatory Commission (Commission) why it should not be ordered to join the Resulting Company as stated in its Order Conditionally Accepting Proposed Tariff Revisions and Revised Agreement and Conforming Regional Transmission Organization Status, 99 FERC ¶ 61,250 (2002).

A copy of the filing was served upon the parties on the official Commission service list in this docket.

Comment Date: July 8, 2002.

8. Central Illinois Generation

[Docket No. ER02–1688–001]

Take notice that on June 14, 2002, Central Illinois Generation (CIGI) tendered for filing with the Federal Energy Regulatory Commission (Commission) additional information to support CIGI's Application for Market-Based Rate Authority, Waivers and Acceptance of Power Supply and Interconnection Agreements filed on May 1, 2002 in Docket No. ER02–1688–000.

Comment Date: July 5, 2002.

9. Progress Energy On behalf of Carolina Power & Light Company

[Docket No. ER02–2101–000]

Take notice that on June 14, 2002, Carolina Power & Light Company (CP&L) tendered for filing a Service Agreement for Network Integration Transmission Service and a Network Operating Agreement with The City of Seneca, SC. Service to this Eligible Customer will be in accordance with the terms and conditions of the Open Access Transmission Tariff filed on behalf of CP&L.

CP&L is requesting an effective date of May 16, 2002 for this Service Agreement. A copy of the filing was served upon Seneca, the North Carolina Utilities Commission and the South Carolina Public Service Commission.

Comment Date: July 5, 2002.

10. Progress Energy On behalf of Carolina Power & Light Company

[Docket No. ER02–2101–000]

Take notice that on June 14, 2002, Carolina Power & Light Company (CP&L) tendered for filing a Service Agreement for Network Integration Transmission Service and a Network Operating Agreement with The City of Seneca, SC. Service to this Eligible Customer will be in accordance with the terms and conditions of the Open Access Transmission Tariff filed on behalf of CP&L.

CP&L is requesting an effective date of May 16, 2002 for this Service Agreement. A copy of the filing was served upon Seneca, the North Carolina Utilities Commission and the South Carolina Public Service Commission.

Comment Date: July 5, 2002.

11. Exelon Generation Company, LLC

[Docket No. ER02–2103–000]

Take notice that on June 17, 2002, Exelon Generation Company, LLC (Exelon Generation), submitted for filing a power sales service agreement between Exelon Generation and TXU Energy Trading Company, LP, under Exelon Generation's wholesale power sales tariff, FERC Electric Tariff Original Volume No. 2.

Comment Date: July 8, 2002.

12. DPL Energy

[Docket No. ER02–2104–000]

Take notice that on June 17, 2002, DPL Energy (DPLE), tendered for filing a long-term transaction agreement with The Dayton Power and Light Company.

Comment Date: July 8, 2002.

13. Arizona Public Service Company

[Docket No.ER02–2105–000]

Take notice that on June 17, 2002, Arizona Public Service Company (APS) tendered for filing a Service Agreement to provide point-to-point transmission service to Southwest Transmission Cooperative, Inc. under APS'' Open Access Transmission Tariff.

A copy of this filing has been served on Southwest Transmission Cooperative, Inc. and the Arizona Corporation Commission.

Comment Date: July 8, 2002.

14. Arizona Public Service Company

[Docket No. ER02–2106–000]

Take notice that on June 17, 2002, Arizona Public Service Company (APS) tendered for filing additions to the Interconnection and Operating Agreements under its Open Access Transmission Tariff with Panda Gila River, L.P.

A copy of this filing has been served on Panda Gila River, L.P., the Western Electricity Coordinating Council and the Arizona Corporation Commission.

Comment Date: July 8, 2002.

15. Southern California Edison Company

[Docket No. ER02–2107–000]

Take notice that on June 17, 2002, Southern California Edison Company (SCE) filed an amendment to the Firm Transmission Service Agreement (Victorville-Lugo/Midway) between SCE and M–S–R Public Power Agency, First Revised Rate Schedule FERC No. 339. The amendment amends the rates to be charged to the MSR Public Power Agency (MSR). A copy of this amendment has been served on MSR and the California Public Utilities Commission.

Comment Date: July 8, 2002.

16. Orion Power MidWest, L.P.

[Docket No. ER02–2108–000]

Take notice that on June 17, 2002, Orion Power MidWest, L.P. (Orion Power MidWest) tendered for filing six copies of a First Revised Rate Schedule FERC No. 10 under Orion Power MidWest's market-based rate tariff, between Orion Power MidWest and Duquesne Light Company.

Comment Date: July 8, 2002.

17. Orion Power MidWest, L.P.

[Docket No. ER02–2109–000]

Take notice that on June 17, 2002, Orion Power MidWest, L.P. (Orion Power MidWest) tendered for filing an Original Service Agreement No. 5 under Orion Power MidWest's market-based rate tariff, between Orion Power MidWest and Duquesne Light Company.

Comment Date: July 8, 2002.

18. Florida Power Corporation

[Docket Nos. ER02–2110–000]

Take notice that on June 17, 2002, Florida Power Corporation (FPC) tendered for filing two notices of cancellation and two revised service agreement cover sheets (collectively, Cancellation Documents) to terminate two service agreements that were filed under previous versions of FPC's open-access transmission tariff, FERC Electric Tariff, Second Revised Volume No. 6. Specifically, FPC is terminating Service Agreement No. 7 between FPC and Tampa Electric Company (TECO), providing for Network Integration Transmission Service, that was filed and accepted under FPC's FERC Electric Tariff, Original Volume No. 6; and Service Agreement No. 52 between FPC and Seminole Electric Cooperative, Inc. (Seminole), providing for Network Contract Demand Transmission Service, that was filed and accepted under FPC's FERC Electric Tariff, First Revised Volume No. 6. The Cancellation Documents are being filed because FPC is no longer providing transmission service under the service agreements.

FPC respectfully requests that the Cancellation Documents become effective as of June 18, 2002, the day after filing. Copies of the filing were served upon the Florida Public Service Commission, TECO and Seminole.

Comment Date: July 8, 2002.

19. Public Service Company of New Mexico

[Docket No. ER02–2111–000]

Take notice that on June 14, 2002, Public Service Company of New Mexico (PNM) submitted for filing an executed copy of the Amended and Restated Agreement for Electric Service dated June 7, 2002 (Agreement), between PNM and The City of Gallup, New Mexico (Gallup). The Agreement which is being filed as Service Agreement No. 35 under PNM FERC Electric Tariff, First Revised Volume No. 3 (Power and Energy Sales Tariff), extends, modifies and supersedes in its entirety, the existing Contract for Electric Service between PNM and Gallup, and sets forth the terms and conditions under which PNM will provide all of the electric power and energy to Gallup (other than Gallup's entitlement to an allocation of federal hydro-electric power or the replacement thereof from Western Area Power Administration) to serve Gallup's McKinley County, New Mexico electric customers, from July 1, 2002 through

June 30, 2013. PNM's filing is available for public inspection at its offices in Albuquerque, New Mexico.

Copies of this filing have been served upon Gallup, the New Mexico Public Regulation Commission and the New Mexico Attorney General.

Comment Date: July 5, 2002.

20. Kansas City Power & Light Company

[Docket No. ER02–2112–000]

Take notice that on June 17, 2002, Kansas City Power & Light Company (KCPL) tendered for filing with the Federal Energy Regulatory Commission (Commission) a Facilities Agreement, dated May 3, 2002 between Kansas City Power & Light Company(KCPL) and the city of Baldwin City, Kansas. KCPL proposes an effective date of July 1, 2002 and requests any necessary waiver of the Commission's notice requirement.

Comment Date: July 8, 2002.

Standard Paragraph

E. Any person desiring to intervene or to protest this filing should file with the Federal Energy Regulatory Commission, 888 First Street, NE., Washington, DC 20426, in accordance with Rules 211 and 214 of the Commission's Rules of Practice and Procedure (18 CFR 385.211 and 385.214). Protests will be considered by the Commission in determining the appropriate action to be taken, but will not serve to make protestants parties to the proceeding. Any person wishing to become a party must file a motion to intervene. All such motions or protests should be filed on or before the comment date, and, to the extent applicable, must be served on the applicant and on any other person designated on the official service list. This filing is available for review at the Commission or may be viewed on the Commission's web site at http://www.ferc.gov using the ''RIMS'' link, select ''Docket #'' and follow the instructions (call 202–208–2222 for assistance). Protests and interventions may be filed electronically via the Internet in lieu of paper; see 18 CFR 385.2001(a)(1)(iii) and the instructions on the Commission's web site under the ''e-Filing'' link.

Magalie R. Salas,

Secretary.

[FR Doc. 02–16247 Filed 6–26–02; 8:45 am]

BILLING CODE 6717–01–P

DEPARTMENT OF ENERGY

Federal Energy Regulatory Commission

[Docket No. EL00–95–061]

San Diego Gas & Electric Company California Independent System Operator Corporation California Power Exchange Corporation; Notice of Filing

June 21, 2002.

Take notice that on May 28, 2002, California Independent System Operator Corporation tendered for filing with the Federal Energy Regulatory Commission (Commission), a compliance filing pursuant to the Commission's February 27, 2002 order issued in the above-proceeding.

Any person desiring to intervene or to protest this filing should file with the Federal Energy Regulatory Commission, 888 First Street, NE., Washington, DC 20426, in accordance with Rules 211 and 214 of the Commission's Rules of Practice and Procedure (18 CFR 385.211 and 385.214). Protests will be considered by the Commission in determining the appropriate action to be taken, but will not serve to make protestants parties to the proceeding. Any person wishing to become a party must file a motion to intervene. All such motions or protests should be filed on or before the comment date, and, to the extent applicable, must be served on the applicant and on any other person designated on the official service list. This filing is available for review at the Commission or may be viewed on the Commission's web site at *http://www.ferc.gov* using the ''RIMS'' link, select ''Docket #'' and follow the instructions (call 202–208–2222 for assistance). Protests and interventions may be filed electronically via the Internet in lieu of paper; *see* 18 CFR 385.2001(a)(1)(iii) and the instructions on the Commission's web site under the ''e-Filing'' link.

Comment Date: June 28, 2002.

Linwood A. Watson, Jr.,

Deputy Secretary.

[FR Doc. 02–16249 Filed 6–26–02; 8:45 am]

BILLING CODE 6717–01–P

DEPARTMENT OF ENERGY

Federal Energy Regulatory Commission

Notice of Application Accepted for Filing and Soliciting Comments, Protests, and Motions To Intervene

June 21, 2002.

Take notice that the following hydroelectric application has been filed with the Commission and is available for public inspection:

a. *Type of Application:* Preliminary Permit.

b. *Project No.:* 12174–000.

c. *Date filed:* May 30, 2002.

d. *Applicant:* Lexington Hydro, LLC.

e. *Name and Location of Project:* The Lexington Project would be located on Los Gatos Creek, a tributary of the Guadalupe River in Santa Clara County, California. The project would be located on an existing dam owned by Pacific Water & Power. The project would be partially located on lands owned by Pacific Water & Power.

f. *Filed Pursuant to:*'' Federal Power Act, 16 U.S.C. 791(a)—825(r).

g. *Applicant contact:* Mr. Brent L. Smith, President, Northwest Power Services, Inc., P.O. Box 535, Rigby, ID 83442, (208) 745–8630, fax (208) 745–7909.

h. *FERC Contact:* Tom Papsidero, (202) 219–2715.

i. *Deadline for filing comments, protests, and motions to intervene:* 60 days from the issuance date of this notice.

All documents (original and eight copies) should be filed with: Magalie R. Salas, Secretary, Federal Energy Regulatory Commission, 888 First Street, NE., Washington, DC 20426. Motions to intervene, protests, and comments may be filed electronically via the internet in lieu of paper. See, 18 CFR 385.2001(a)(1)(iii) and the instructions on the Commission's web site under the ''e-Filing'' link. Please include the project number (P–12174–000) on any comments or motions filed.

The Commission's Rules of Practice and Procedure require all interveners filing documents with the Commission to serve a copy of that document on each person in the official service list for the project. Further, if an intervener files comments or documents with the Commission relating to the merits of an issue that may affect the responsibilities of a particular resource agency, they must also serve a copy of the document on that resource agency.

j. *Description of Project:* The proposed project would use the existing Lexington Reservoir, impounded by an

existing 810-foot-long, 205-foot-high earthfill dam, and having a surface area of 450 acres and a storage capacity of 21,430 acre-feet at normal maximum water surface elevation 645 feet msl and include: (1) A proposed powerhouse with a total installed capacity of 1 megawatt, (2) a proposed 200-foot-long, 3.5-foot-diameter penstock, (3) a proposed 1-mile-long, 15 kv transmission line, and (4) appurtenant facilities. The project would operate in a run-of-river mode and would have an average annual generation of 8.76 GWh.

k. Copies of this filing are on file with the Commission and are available for public inspection. This filing may also be viewed on the web at *http://www.ferc.gov* using the ''RIMS'' link, select ''Docket #'' and follow the instructions (call 202–208–2222 for assistance).

l. *Preliminary Permit*—Anyone desiring to file a competing application for preliminary permit for a proposed project must submit the competing application itself, or a notice of intent to file such an application, to the Commission on or before the specified comment date for the particular application (see 18 CFR 4.36). Submission of a timely notice of intent allows an interested person to file the competing preliminary permit application no later than 30 days after the specified comment date for the particular application. A competing preliminary permit application must conform with 18 CFR 4.30(b) and 4.36.

m. *Preliminary Permit*—Any qualified development applicant desiring to file a competing development application must submit to the Commission, on or before a specified comment date for the particular application, either a competing development application or a notice of intent to file such an application. Submission of a timely notice of intent to file a development application allows an interested person to file the competing application no later than 120 days after the specified comment date for the particular application. A competing license application must conform with 18 CFR 4.30(b) and 4.36.

n. *Notice of Intent*—A notice of intent must specify the exact name, business address, and telephone number of the prospective applicant, and must include an unequivocal statement of intent to submit, if such an application may be filed, either a preliminary permit application or a development application (specify which type of application). A notice of intent must be served on the applicant(s) named in this public notice.

o. *Proposed Scope of Studies under Permit*—A preliminary permit, if issued, does not authorize construction. The term of the proposed preliminary permit would be 36 months. The work proposed under the preliminary permit would include economic analysis, preparation of preliminary engineering plans, and a study of environmental impacts. Based on the results of these studies, the Applicant would decide whether to proceed with the preparation of a development application to construct and operate the project.

p. *Comments, Protests, or Motions to Intervene*—Anyone may submit comments, a protest, or a motion to intervene in accordance with the requirements of Rules of Practice and Procedure, 18 CFR 385.210, 385.211, 385.214. In determining the appropriate action to take, the Commission will consider all protests or other comments filed, but only those who file a motion to intervene in accordance with the Commission's Rules may become a party to the proceeding. Any comments, protests, or motions to intervene must be received on or before the specified comment date for the particular application.

q. *Filing and Service of Responsive Documents*—Any filings must bear in all capital letters the title ''COMMENTS'', ''NOTICE OF INTENT TO FILE COMPETING APPLICATION'', ''COMPETING APPLICATION'', ''PROTEST'', or ''MOTION TO INTERVENE'', as applicable, and the Project Number of the particular application to which the filing refers. Any of the above-named documents must be filed by providing the original and the number of copies provided by the Commission's regulations to: The Secretary, Federal Energy Regulatory Commission, 888 First Street, NE., Washington, DC 20426. An additional copy must be sent to Director, Division of Hydropower Administration and Compliance, Federal Energy Regulatory Commission, at the above-mentioned address. A copy of any notice of intent, competing application or motion to intervene must also be served upon each representative of the Applicant specified in the particular application.

r. *Agency Comments*—Federal, state, and local agencies are invited to file comments on the described application. A copy of the application may be obtained by agencies directly from the Applicant. If an agency does not file comments within the time specified for filing comments, it will be presumed to have no comments. One copy of an agency's comments must also be sent to the Applicant's representatives.

Linwood A. Watson, Jr.,

Deputy Secretary.

[FR Doc. 02–16250 Filed 6–26–02; 8:45 am]

BILLING CODE 6717–01–P

DEPARTMENT OF ENERGY

Federal Energy Regulatory Commission

Notice of License Amendment Request and Soliciting Comments, Motions To Intervene, and Protests

June 21, 2002.

Take notice that the following application has been filed with the Commission and is available for public inspection:

a. *Application Type:* Request for License Amendment.

b. *Project No:* 2833–086.

c. *Date Filed:* April 10, 2002.

d. *Applicant:* Lewis County Public Utility District.

e. *Name of Project:* Cowlitz Falls Hydroelectric Project

f. *Location:* The project is located on the Cowlitz River just below its confluence with the Cispus River in Lewis County, Washington.

g. *Filed Pursuant to:* 18 CFR 4.200.

h. *Applicant Contact:* Mr. David J. Muller, Lewis County Public Utility District, P.O. Box 330, Chehalis, WA 98532–0330, (360) 748–9261.

i. *FERC Contact:* Any questions on this notice should be addressed to Mr. Erich Gaedeke at (202) 208–0777, or e-mail address: *erich.gaedeke@ferc.gov*.

j. *Deadline for filing comments and or motions:* July 22, 2002.

All documents (original and seven copies) should be filed with: Magalie R. Salas, Secretary, Federal Energy Regulatory Commission, 888 First Street, NE, Washington DC 20426. Please include the project number (P–2833–086) on any comments or motions filed.

k. *Description of Request:* The Lewis County Public Utility District (licensee) filed an application to amend its approved Fish and Wildlife Mitigation Plan for the Cowlitz Falls Hydroelectric Project. The licensee requests Commission approval to modify its Mitigation Trout Stocking Program in Lake Scanewa to better strike a balance between meeting the project mitigation catch rate and protecting Endangered Species Act listed species. The Washington State Department of Fish and Wildlife has already approved the licensee's proposal.

l. *Locations of the Application:* A copy of the application is available for inspection and reproduction at the Commission's Public Reference Room, located at 888 First Street, NE, Room 2A, Washington, DC 20426, or by calling (202) 208–1371. This filing may also be viewed on the web at *http://www.ferc.gov* using the ''RIMS'' link, select ''Docket#'' and follow the instructions (call 202–208–2222 for assistance). A copy is also available for inspection and reproduction at the address in item (h) above.

m. Individuals desiring to be included on the Commission's mailing list should so indicate by writing to the Secretary of the Commission.

n. Comments, Protests, or Motions to Intervene—Anyone may submit comments, a protest, or a motion to intervene in accordance with the requirements of Rules of Practice and Procedure, 18 CFR 385.210, .211, .214. In determining the appropriate action to take, the Commission will consider all protests or other comments filed, but only those who file a motion to intervene in accordance with the Commission's Rules may become a party to the proceeding. Any comments, protests, or motions to intervene must be received on or before the specified comment date for the particular application.

o. Filing and Service of Responsive Documents—Any filings must bear in all capital letters the title ''COMMENTS'', ''RECOMMENDATIONS FOR TERMS AND CONDITIONS'', ''PROTEST'', OR ''MOTION TO INTERVENE'', as applicable, and the Project Number of the particular application to which the filing refers. A copy of any motion to intervene must also be served upon each representative of the Applicant specified in the particular application.

p. Agency Comments—Federal, state, and local agencies are invited to file comments on the described application. A copy of the application may be obtained by agencies directly from the Applicant. If an agency does not file comments within the time specified for filing comments, it will be presumed to have no comments. One copy of an agency's comments must also be sent to the Applicant's representatives.

q. Comments, protests and interventions may be filed electronically via the Internet in lieu of paper. *See*, 18 CFR 385.2001(a)(1)(iii) and the instructions on the Commission's web site at *http://www.ferc.gov* under the ''e-Filing'' link.

Linwood A. Watson, Jr.,

Deputy Secretary.

[FR Doc. 02–16254 Filed 6–26–02; 8:45 am]

BILLING CODE 6717–01–P

DEPARTMENT OF ENERGY

Federal Energy Regulatory Commission

[Project No. 2000–036 NY]

Power Authority of the State of New York; Notice of Site Visit

June 21, 2002.

On July 10 and July 11, 2002, the Office of Energy Projects Staff (Staff) will participate in an on-site visit of the St. Lawrence-FDR Power Project on the St. Lawrence River near Massena, in St. Lawrence County, New York. On July 10, 2002, the site visit will begin at 8:30 a.m., meeting at the New York Power Authority (NYPA) Robert Moses Powerhouse. The site visit conducted on July 11, 2002 is intended for Staff only, to view areas in the project vicinity by boat. Staff will be touring the project vicinity by boat on July 11, 2002. Due to public safety concerns and ex parte limitations, Staff will not be able to provide boating access for others.

All interested parties and individuals are welcome to attend the site visit on July 10, 2002. Individuals interested in participating in the site tour on July 10, 2002 must provide their own transportation. Those planning to attend must contact Susan O'Brien at (202) 219–2840 or *susan.obrien@ferc.gov* no later than July 5, 2002.

Linwood A. Watson, Jr.,

Deputy Secretary.

[FR Doc. 02–16251 Filed 6–26–02; 8:45 am]

BILLING CODE 6717–01–P

DEPARTMENT OF ENERGY

Federal Energy Regulatory Commission

[Project Nos. 2146–090,82–019, and 618–104—AlabamaCoosa River Project, Mitchell, Project, and Jordan Project]

Alabama Power Company; Notice of Proposed Restricted Service List for a Programmatic Agreement for Managing Properties Included in or Eligible for Inclusion in the National Register of Historic Places

June 21, 2002.

Rule 2010 of the Federal Energy Regulatory Commission's (Commission) Rules of Practice and Procedure provides that, to eliminate unnecessary expense or improve administrative efficiency, the Secretary may establish a restricted service list for a particular phase or issue in a proceeding.[1] The restricted service list should contain the names of persons on the service list who, in the judgment of the decisional authority establishing the list, are active participants with respect to the phase or issue in the proceeding for which the list is established.

The Commission staff is consulting with the Alabama and Georgia State Historic Preservation Officer (hereinafter, SHPOs) and the Advisory Council on Historic Preservation (hereinafter, Council) pursuant to the Council's regulations, 36 CFR part 800, implementing Section 106 of the National Historic Preservation Act, as amended, (16 U.S.C. Section 470 f), to prepare and execute a programmatic agreement for managing properties included in, or eligible for inclusion in, the National Register of Historic Places at Project Nos. 2146, 82, and 618.

The programmatic agreement, when executed by the Commission, the SHPOs, and the Council, would satisfy the Commission's Section 106 responsibilities for all individual undertakings carried out in accordance with the licenses until the licenses expire or are terminated (36 CFR 800.13[e]). The Commission's responsibilities pursuant to Section 106 for the above projects would be fulfilled through the programmatic agreement, which the Commission proposes to draft in consultation with certain parties listed below. The executed programmatic agreement would be incorporated into any Orders issuing licenses.

Alabama Power Company, as licensee for Project Nos. 2146, 82, and 618, and the Mississippi Band of Choctaw Indians, Jena Band of Choctaw Indians, Chickasaw Nation, Poarch Band of Creek Indians, and the U.S. Bureau of Indian Affairs have expressed an interest in this preceding and are invited to participate in consultations to develop the programmatic agreement.

For purposes of commenting on the programmatic agreement, we propose to restrict the service list for the aforementioned projects as follows:

Dr. Laura Henley Dean, Advisory Council on Historic Preservation, The Old Post Office Building, Suite 803, 1100 Pennsylvania Avenue, NW., Washington, DC 20004.

Amanda McBride, Alabama Historical Commission, 1500 Tower Building,

[1] 18 CFR Section 385.2010.

323 Center Street, Little Rock, AR 72201.

David Crass, Georgia Historic Preservation Division, 156 Trinity Avenue SW., Suite 101, Atlanta, GA 30303–1040.

Christine Norris, Tribal Historic Preservation Officer, Jena Band of Choctaw Indians, P.O. Box 14, Jena, LA 71342.

William Day, Tribal Historic Preservation Officer, Poarch Band of Creek Indians, 128 Olive St., Pineville, LA 71360.

Rena Duncan, Tribal Historic Preservation Officer, Chickasaw Nation, P.O. Box 1548, Ada, OK 74820.

Ken Carleton, Tribal Historic Preservation Officer, Mississippi Band of Choctaw Indians, P.O. Box 6257, Choctaw, MS 39350.

Dr. James Kardatzke, Bureau of Indian Affairs, Eastern Region Office, 711 Stewarts Ferry Pike, Nashville, TN 37214.

Kelly Schaeffer, 6225 Brandon Avenue, Suite 110, Springfield, VA 22150.

Barry Lovett, Alabama Power Company, P.O. Box 2641, Birmingham, AL 35291.

John Harrington, Esq., Office of Solicitor, Southeast Regional Office, 75 Spring St., SW., Suite 304, Atlanta, GA 30303.

Any person on the official service list for the above-captioned proceedings may request inclusion on the restricted service list, or may request that a restricted service list not be established, by filing a motion to that effect within 15 days of this notice date. In a request for inclusion, please identify the reason(s) why there is an interest to be included. Also please identify any concerns about Historic Properties, including Traditional Cultural Properties. If Historic Properties are to be identified within the motion, please use a separate page, and label it NON-PUBLIC Information.

An original and 8 copies of any such motion must be filed with Magalie Salas, the Secretary of the Commission (888 First Street, NE., Washington, DC 20426) and must be served on each person whose name appears on the official service list. If no such motions are filed, the restricted service list will be effective at the end of the 15 day period. Otherwise, a further notice will be issued ruling on any motion or motions filed within the 15 day period.

Linwood A. Watson, Jr.,

Deputy Secretary.

[FR Doc. 02–16252 Filed 6–26–02; 8:45 am]

BILLING CODE 6717–01–P

DEPARTMENT OF ENERGY

Federal Energy Regulatory Commission

[Project No. 2165–015—Alabama Black Warrior River Project]

Alabama Power Company; Notice of Proposed Restricted Service List for a Programmatic Agreement for Managing Properties Included in or Eligible for Inclusion in the National Register of Historic Places

June 21, 2002.

Rule 2010 of the Federal Energy Regulatory Commission's (Commission) Rules of Practice and Procedure provides that, to eliminate unnecessary expense or improve administrative efficiency, the Secretary may establish a restricted service list for a particular phase or issue in a proceeding.[1] The restricted service list should contain the names of persons on the service list who, in the judgment of the decisional authority establishing the list, are active participants with respect to the phase or issue in the proceeding for which the list is established.

The Commission staff is consulting with the Alabama State Historic Preservation Officer (hereinafter, SHPO) and the Advisory Council on Historic Preservation (hereinafter, Council) pursuant to the Council's regulations, 36 CFR part 800, implementing Section 106 of the National Historic Preservation Act, as amended, (16 U.S.C. Section 470 f), to prepare and execute a programmatic agreement for managing properties included in, or eligible for inclusion in, the National Register of Historic Places at Project No. 2165–015.

The programmatic agreement, when executed by the Commission, the SHPO, and the Council, would satisfy the Commission's Section 106 responsibilities for all individual undertakings carried out in accordance with the license until the license expires or is terminated (36 CFR 800.13[e]). The Commission's responsibilities pursuant to Section 106 for the Black Warrior River Project would be fulfilled through the programmatic agreement, which the Commission proposes to draft in consultation with certain parties listed below. The executed programmatic agreement would be incorporated into any Order issuing a license.

Alabama Power Company, as licensee for Project No. 2165, and the Mississippi Band of Choctaw Indians, Jena Band of Choctaw Indians, Chickasaw Nation, Poarch Band of Creek Indians, U. S. Forest Service, U.S. Army Corp of Engineers, and the U.S. Bureau of Indian Affairs have expressed an interest in this preceding and are invited to participate in consultations to develop the programmatic agreement.

For purposes of commenting on the programmatic agreement, we propose to restrict the service list for the aforementioned projects as follows:

Dr. Laura Henley Dean, Advisory Council on Historic Preservation, The Old Post Office Building, Suite 803, 1100 Pennsylvania Avenue, NW., Washington, DC 20004

Amanda McBride, Alabama Historical Commission, 1500 Tower Building, 323 Center Street, Little Rock, AR 72201

Christine Norris, Tribal Historic Preservation Officer, Jena Band of Choctaw Indians, P.O. Box 14, Jena, LA 71342

William Day, Tribal Historic Preservation Officer, Poarch Band of Creek Indians, 128 Olive St., Pineville, LA 71360

Rena Duncan, Tribal Historic Preservation Officer, Chickasaw Nation, P.O. Box 1548, Ada, OK 74820

Ken Carleton, Tribal Historic Preservation Officer, Mississippi Band of Choctaw Indians, P.O. Box 6257, Choctaw, MS 39350

Dr. James Kardatzke, Bureau of Indian Affairs, Eastern Region Office, 711 Stewarts Ferry Pike, Nashville, TN 37214

Robert Pasquill, United States Forest Service, 2946 Chestnut St., Montgomery, AL 36107–3010

Elrand Denson, United States Forest Service, 2946 Chestnut St., Montgomery, AL 36107–3010

Michael Eubanks, United States Army Corp of Engineers, 109 Saint Joseph St., Mobile, AL 36628

Charles Gault, Esq., Office of Solicitor, 530 Gay St., Room 308, Knoxville, TN 37918

Kelly Schaeffer, 6225 Brandon Avenue, Suite 110, Springfield, VA 22150

Barry Lovett, Alabama Power Company, P.O. Box 2641, Birmingham, AL 35291

Any person on the official service list for the above-captioned proceeding may request inclusion on the restricted service list, or may request that a restricted service list not be established, by filing a motion to that effect within 15 days of this notice date. In a request for inclusion, please identify the reason(s) why there is an interest to be included. Also please identify any concerns about Historic Properties, including Traditional Cultural Properties. If Historic Properties are to

[1] 18 CFR Section 385.2010.

be identified within the motion, please use a separate page, and label it NON-PUBLIC Information.

An original and 8 copies of any such motion must be filed with Magalie Salas, the Secretary of the Commission (888 First Street, NE., Washington, DC 20426) and must be served on each person whose name appears on the official service list. If no such motions are filed, the restricted service list will be effective at the end of the 15 day period. Otherwise, a further notice will be issued ruling on any motion or motions filed within the 15 day period.

Linwood A. Watson, Jr.,

Deputy Secretary.

[FR Doc. 02–16253 Filed 6–26–02; 8:45 am]

BILLING CODE 6717–01–P

DEPARTMENT OF ENERGY

Federal Energy Regulatory Commission

[Docket No. RM98–1–000]

Regulations Governing Off-the-Record Communications; Public Notice

June 21, 2002.

This constitutes notice, in accordance with 18 CFR 385.2201(h), of the receipt of exempt and prohibited off-the-record communications.

Order No. 607 (64 FR 51222, September 22, 1999) requires Commission decisional employees, who make or receive an exempt or a prohibited off-the-record communication relevant to the merits of a contested on-the-record proceeding, to deliver a copy of the communication, if written, or a summary of the substance of any oral communication, to the Secretary.

Prohibited communications will be included in a public, non-decisional file associated with, but not part of, the decisional record of the proceeding. Unless the Commission determines that the prohibited communication and any responses thereto should become part of the decisional record, the prohibited off-the-record communication will not be considered by the Commission in reaching its decision. Parties to a proceeding may seek the opportunity to respond to any facts or contentions made in a prohibited off-the-record communication, and may request that the Commission place the prohibited communication and responses thereto in the decisional record. The Commission will grant such requests only when it determines that fairness so requires. Any person identified below as having made a prohibited off-the-record communication should serve the document on all parties listed on the official service list for the applicable proceeding in accordance with Rule 2010, 18 CFR 385.2010.

Exempt off-the-record communications will be included in the decisional record of the proceeding, unless the communication was with a cooperating agency as described by 40 CFR 1501.6, made under 18 CFR 385.2201(e)(1)(v).

The following is a list of exempt and prohibited off-the-record communications recently received in the Office of the Secretary. Copies of this filing are on file with the Commission and are available for public inspection. The documents may be viewed on the web at *http://www.ferc.gov* using the ''RIMS'' link, select ''Docket#'' and follow the instructions (call 202–208–2222 for assistance).

EXEMPT

Docket No.	Date filed	Presenter or requester
1. Project No. 1354–000	6–11–02	Brandy Bradford.
2. Project No. 1354–000	6–11–02	Karen Miller.
3. Project No. 1494–032	6–12–02	Edward B. Leinbach.
4. Project No. 1494–237/240 and 241	6–12–02	Steve Naugle.
5. Project No. 2342–000	6–17–02	Gail Miller.
6. Project No. 2342–000	6–18–02	Olivia Romano (Nicholas Jayjack).
7. Project No. 2342–000	6–18–02	Ed Woodruff (Nicholas Jayjack).
8. Docket No. CP01–57–000	6–18–02	William Lavarco (Joel Zipp).

Linwood A. Watson, Jr.,

Deputy Secretary.

[FR Doc. 02–16255 Filed 6–26–02; 8:45 am]

BILLING CODE 6717–01–P

DEPARTMENT OF ENERGY

Federal Energy Regulatory Commission

[Docket Nos. RM01–12–000 et al.]

Errata Notice

June 19, 2002.

In the matter of: RM01–12–000, RT01–99–000, 001, 002 and 003, RT01–95–000, 001 and 002, RT01–86–000, 001 and 002, RT01–2–000, 001, 002 and 003, RT01–98–000; Electric Market Design and Structure, Regional Transmission Organizations, New York Independent System Operator, Inc., Bangor Hydro-Electric Company, PJM Interconnection, L.L.C., and PJM Interconnection, L.L.C.

The ''Notice of Request for Comments on Timeline and Report by the Northeast Independent System Operators on Seams Resolution'' issued June 18, 2002,[1] needs to be corrected as follows:

In the caption, Midwest Independent System Operator, Docket No. RT01–87–000 and Alliance Companies, Docket No. EL02–65–000 should be deleted and Electric Market Design and Structure, Docket No. RM01–12–000, should be added.

In the first paragraph, the fourth and fifth sentences should read as follows: ''The Federal Energy Regulatory Commission requested that these independent system operators incorporate the views of the state commissions and affected stakeholders into the seams resolution plan. Toward this end, the Federal Energy Regulatory Commission advised the independent system operators to coordinate their efforts with the state commissions and affected stakeholders.''

Magalie R. Salas,

Secretary.

[FR Doc. 02–16246 Filed 6–26–02; 8:45 am]

BILLING CODE 6717–01–P

[1] The ''Notice of Request for Comments on Timeline and Report by the Northeast Independent System Operators on Seams Resolution'' issued on June 18, 2002, is scheduled to be published in the **Federal Register** on Tuesday, June 25, 2002.

ENVIRONMENTAL PROTECTION AGENCY

[OPP–2002–0115; FRL–7183–2]

Notice of Filing a Pesticide Petition to Establish a Tolerance fora Certain Pesticide Chemical in or on Food

AGENCY: Environmental Protection Agency (EPA).

ACTION: Notice.

SUMMARY: This notice announces the initial filing of a pesticide petition proposing the establishment of regulations for residues of a certain pesticide chemical in or on various food commodities.

DATES: Comments, identified by docket control number OPP–2002–0115, must be received on or before July 29, 2002.

ADDRESSES: Comments may be submitted by mail, electronically, or in person. Please follow the detailed instructions for each method as provided in Unit I.C. of the **SUPPLEMENTARY INFORMATION**. To ensure proper receipt by EPA, it is imperative that you identify docket control number OPP–2002–0115 in the subject line on the first page of your response.

FOR FURTHER INFORMATION CONTACT: By mail: Dani Daniel, Registration Support Branch, Registration Division (7505C), Office of Pesticide Programs, Environmental Protection Agency, 1200 Pennsylvania Ave., NW., Washington, DC 20460; telephone number: (703) 305–5409; e-mail address: daniel.dani@epa.gov.

SUPPLEMENTARY INFORMATION:

I. General Information

A. Does this Action Apply to Me?

You may be affected by this action if you are an agricultural producer, food manufacturer or pesticide manufacturer. Potentially affected categories and entities may include, but are not limited to:

Categories	NAICS codes	Examples of potentially affected entities
Industry	111 112 311 32532	Crop production Animal production Food manufacturing Pesticide manufacturing

This listing is not intended to be exhaustive, but rather provides a guide for readers regarding entities likely to be affected by this action. Other types of entities not listed in the table could also be affected. The North American Industrial Classification System (NAICS) codes have been provided to assist you and others in determining whether or not this action might apply to certain entities. If you have questions regarding the applicability of this action to a particular entity, consult the person listed under **FOR FURTHER INFORMATION CONTACT**.

B. How Can I Get Additional Information, Including Copies of this Document and Other Related Documents?

1. *Electronically*. You may obtain electronic copies of this document, and certain other related documents that might be available electronically, from the EPA Internet Home Page at http://www.epa.gov/. To access this document, on the Home Page select ''Laws and Regulations,'' ''Regulations and Proposed Rules,'' and then look up the entry for this document under the ''**Federal Register**—Environmental Documents.'' You can also go directly to the **Federal Register** listings at http://www.epa.gov/fedrgstr/. A frequently updated electronic version of 40 CFR part 180 is available at http://www.access.gpo.gov/nara/cfr/cfrhtml_00/Title_40/40cfr180_00.html, a beta site currently under development.

2. *In person*. The Agency has established an official record for this action under docket control number OPP–2002–0115. The official record consists of the documents specifically referenced in this action, any public comments received during an applicable comment period, and other information related to this action, including any information claimed as confidential business information (CBI). This official record includes the documents that are physically located in the docket, as well as the documents that are referenced in those documents. The public version of the official record does not include any information claimed as CBI. The public version of the official record, which includes printed, paper versions of any electronic comments submitted during an applicable comment period, is available for inspection in the Public Information and Records Integrity Branch (PIRIB), Rm. 119, Crystal Mall #2, 1921 Jefferson Davis Highway, Arlington, VA, from 8:30 a.m. to 4 p.m., Monday through Friday, excluding legal holidays. The PIRIB telephone number is (703) 305–5805.

C. How and to Whom Do I Submit Comments?

You may submit comments through the mail, in person, or electronically. To ensure proper receipt by EPA, it is imperative that you identify docket ID number OPP–2002–0115 in the subject line on the first page of your response.

1. *By mail*. Submit your comments to: Public Information and Records Integrity Branch (PIRIB), Information Resources and Services Division (7502C), Office of Pesticide Programs (OPP), Environmental Protection Agency, 1200 Pennsylvania Ave., NW., Washington, DC 20460.

2. *In person or by courier*. Deliver your comments to: Public Information and Records Integrity Branch (PIRIB), Information Resources and Services Division (7502C), Office of Pesticide Programs (OPP), Environmental Protection Agency, Rm. 119, Crystal Mall #2, 1921 Jefferson Davis Highway, Arlington, VA. The PIRIB is open from 8:30 a.m. to 4 p.m., Monday through Friday, excluding legal holidays. The PIRIB telephone number is (703) 305–5805.

3. *Electronically*. You may submit your comments electronically by e-mail to: opp-docket@epa.gov, or you can submit a computer disk as described above. Do not submit any information electronically that you consider to be CBI. Avoid the use of special characters and any form of encryption. Electronic submissions will be accepted in Wordperfect 6.1/8.0 or ASCII file format. All comments in electronic form must be identified by docket ID number OPP–2002–0115. Electronic comments may also be filed online at many Federal Depository Libraries.

D. How Should I Handle CBI That I Want to Submit to the Agency?

Do not submit any information electronically that you consider to be CBI. You may claim information that you submit to EPA in response to this document as CBI by marking any part or all of that information as CBI. Information so marked will not be disclosed except in accordance with procedures set forth in 40 CFR part 2. In addition to one complete version of the comment that includes any information claimed as CBI, a copy of the comment that does not contain the information claimed as CBI must be submitted for inclusion in the public version of the official record. Information not marked confidential will be included in the public version of the official record without prior notice. If you have any questions about CBI or the procedures for claiming CBI, please consult the person identified under **FOR FURTHER INFORMATION CONTACT**.

E. What Should I Consider as I Prepare My Comments for EPA?

You may find the following suggestions helpful for preparing your comments:

1. Explain your views as clearly as possible.
2. Describe any assumptions that you used.
3. Provide copies of any technical information and/or data you used that support your views.
4. If you estimate potential burden or costs, explain how you arrived at the estimate that you provide.
5. Provide specific examples to illustrate your concerns.
6. Make sure to submit your comments by the deadline in this notice.
7. To ensure proper receipt by EPA, be sure to identify the docket ID number assigned to this action in the subject line on the first page of your response. You may also provide the name, date, and **Federal Register** citation.

II. What Action is the Agency Taking?

EPA has received a pesticide petition as follows proposing the establishment and/or amendment of regulations for residues of a certain pesticide chemical in or on various food commodities under section 408 of the Federal Food, Drug, and Cosmetic Act (FFDCA), 21 U.S.C. 346a. EPA has determined that this petition contains data or information regarding the elements set forth in section 408(d)(2); however, EPA has not fully evaluated the sufficiency of the submitted data at this time or whether the data support granting of the petition. Additional data may be needed before EPA rules on the petition.

List of Subjects

Environmental protection, Agricultural commodities, Feed additives, Food additives, Pesticides and pests, Reporting and recordkeeping requirements.

Dated: June 17, 2002.

Debra Edwards,

Acting Director, Registration Division, Office of Pesticide Programs.

Summary of Petition

The petitioner summary of the pesticide petition is printed below as required by section 408(d)(3) of the FFDCA. The summary of the petition was prepared by Sygenta Crop Protection Inc. and represents the view of Sygenta. EPA is publishing the petition summary verbatim without editing it in any way. The petition summary announces the availability of a description of the analytical methods available to EPA for the detection and measurement of the pesticide chemical residues or an explanation of why no such method is needed.

PP 0F6142

EPA has received a pesticide petition (0F6142) from Syngenta Crop Protection Inc., P.O. Box 18300, Greensboro, NC 27419–8300 proposing, pursuant to section 408(d) of the Federal Food, Drug, and Cosmetic Act (FFDCA), 21 U.S.C. 346a(d), to amend 40 CFR part 180, by establishing a tolerance for residues of thiamethoxam and its metabolite in or on the raw agricultural commodity corn forage at 0.10 parts per million (ppm); corn stover at 0.05 ppm; and popcorn, corn grain and sweet corn (kernal and cob with husk removed) at 0.02 ppm. EPA has determined that the petition contains data or information regarding the elements set forth in section 408(d)(2) of the FFDCA; however, EPA has not fully evaluated the sufficiency of the submitted data at this time or whether the data support granting of the petition. Additional data may be needed before EPA rules on the petition.

A. Residue Chemistry

1. *Plant metabolism.* The primary metabolic pathways of thiamethoxam in plants (corn, rice, pears, and cucumbers) were similar to those described for animals, with certain extensions of the pathway in plants. Parent compound and CGA–322704 were the major residues in all crops. The metabolism of thiamethoxam in plants and animals is understood for the purposes of the proposed tolerances. Parent thiamethoxam and the metabolite, CGA–322704, are the residues of concern for tolerance setting purposes.

2. *Analytical method.* Syngenta Crop Protection Inc. has submitted practical analytical methodology for detecting and measuring levels of thiamethoxam in or on raw agricultural commodities. The method is based on crop specific cleanup procedures and determination by liquid chromatography with either ultraviolet (UV) or mass spectroscopy (MS) detection. The limit of detection (LOD) for each analyte of this method is 1.25 nanogram (ng) injected for samples analyzed by UV and 0.25 ng injected for samples analyzed by MS, and the limit of quantitation (LOQ) is 0.005 ppm for milk and juices and 0.01 ppm for all other substrates.

3. *Magnitude of residues.* A residue program was performed for thiamethoxam used as a seed treatment for corn. Seed was treated at label rates of 100 to 450 (maximum) grams of thiamethoxam per 100 kilograms of seed. A 3X exaggerated rate trial was also conducted to determine the magnitude of the residue in processed field corn commodities.

Thirty-six field trials were conducted in 19 states representing typical corn growing areas of the United States, including 21 field corn, 12 sweet corn, and 3 popcorn field trials. There were no detectable residues (<0.01 ppm) of either thiamethoxam or the major metabolite in any grain, ear or field corn processed fraction. The maximum residues in animal feed commodities were 0.09 ppm in forage and 0.03 ppm in stover (total thiamethoxam equivalents).

B. Toxicological Profile

1. *Acute toxicity.* The acute oral LD_{50} for thiamethoxam in the rat is 1,563 milligrams/kilogram body weight (mg/kg bwt). The acute dermal LD_{50} of thiamethoxam is >2,000 mg/kg bwt. Thiamethoxam is non-toxic at atmospheric concentrations of 3.72 mg/L. Thiamethoxam is minimally irritating to the eye, non-irritating to skin and is not a dermal sensitizer.

In an acute neurotoxicity screening study in rats (OPPTS 870.6200), the no observed adverse effect level (NOAEL) was 100 mg/kg/day with a NOAEL of 500 mg/kg/day based on drooped palpebral closure, decrease in rectal temperature and locomotor activity and increase in forelimb grip strength (males only). At higher dose levels, mortality, abnormal body tone, ptosis, impaired respiration, tremors, longer latency to first step in the open field, crouched over posture, gait impairment, hypo-arousal, decreased number of rears, uncoordinated landing during the righting reflex test, slight lacrimation (females only) and higher mean average input stimulus value in the auditory startle response test (males only).

2. *Genotoxicty.* In gene mutation studies with *S. typhimurium* and *E. coli* (OPPTS 870.5100 and 870.5265, there was no evidence of gene mutation when tested up to 5,000 μg/plate and there was no evidence of cytotoxicity.

In a gene mutation study with chinese hampster V79 cells at hypoxanthine guanine phophoribosyl transferase (HGPRT) focus (OPPTS 870.5300), there was no evidence of of gene mutation when tested up to the solubility limit.

In a chinese hampster ovary (CHO) cell cytogenetics study (OPPTS 870.5375), there was no evidence of

chromosomal aberrations when tested up to cytotoxic or solubility limit concentrations.

An *in vivo* mouse bone marrow micronucleus study (OPPTS 870.5395) was negative when tested up to levels of toxicity in whole animals; however, no evidence of target cell cytotoxicity.

An unscheduled DNA synthesis (UDS) assay (OPPTS 870.5550) was negative when tested up to precipitating concentrations.

3. *Reproductive and developmental toxicity.* A prenatal developmental study in the rat (OPPTS 870.3700) resulted in maternal and developmental NOAELs of 30 mg/kg/day and 200 mg/kg/day, respectively. The maternal lowest observed adverse effect level (LOAEL) is 200 mg/kg/day based on decreased body weight, body weight gain and food consumption. The developmental LOAEL was 750 mg/kg/day based on decreased fetal body weight and an increased incidence of skeletal anomalies.

A prenatal developmental study in the rabbit (OPPTS 870.3700) resulted in maternal and developmental NOAELs of 50 mg/kg/day. The maternal and developmental LOAEL is 150 mg/kg/day. The maternal LOAEL is based on maternal deaths, hemorrhagic discharge, decreased body weight and food intake during the dosing period. The developmental LOAEL is based on decreased fetal body weights, increased incidence of post-implantation loss and a slight increase in the incidence of a few skeletal anomolies/variations.

In a reproduction and fertility effects study in rats (OPPTS 870.3800) the parental/systemic NOAEL is 1.84 (males), 202.06 (females) mg/kg/day; the reproductive NOAEL is 0.61 (males), 202.06 (females) mg/kg/day; and the offspring NOAEL is 61.25 (males), 79.20 (females) mg/kg/day. The parental/systemic LOAEL is 61.25 (males), not determined (females) mg/kg/day based on increased incidence of hyaline change in renal tubules in F0 and F1 males. The reproductive LOAEL is 1.84 (males), not determined (females) mg/kg/day based on increased incidence and severity of tubular atrophy observed in testes of the F1 generation males. The offspring LOAEL is 158.32 (males), 202.06 (females) mg/kg/day based on reduced body weight gain during the lactation period in all litters.

4. *Subchronic toxicity.* A 90–day oral toxicity study in rats (OPPTS 870.3100) resulted in a NOAEL of 1.74 (males), 92.5 (females) mg/kg/day. The LOAEL is 17.64 (male), 182.1 (female) mg/kg/day based on increased incidence of hyaline change of renal tubules epithelium (males), fatty change in adrenal-gland of females, liver changes in females, all at the LOAEL. A 90–day oral toxicity study in mice (OPPTS 870.3100) resulted in an NOAEL of 1.41 (males), 19.2 (females) mg/kg/day. The LOAEL was 14.3 (male) 231 (female) mg/kg/day based on increased incidence of hepatocellular hypertrophy. At higher dose levels: Decrease in body weight and body weight gain, necrosis of individual hepatocytes, pigmentation of Kupffer cells, and lymphocytic infiltration of the liver in both sexes; slight hematologic effects and decreased absolute and relative kidney weights in males; and ovarian atrophy, decreased ovary and spleen weights and increased liver weights in females.

In a 90–day oral toxicity study in dogs (OPPTS 870.3150), the NOAEL is 8.23 (males), 9.27 (females) mg/kg/day. The LOAEL is 32.0 (male), 33.9 (female) mg/kg/day based on slightly prolonged prothrombin times and decreased plasma albumin and A/G ration (both sexes); decreased calcium levels and ovary weights and delayed maturation in the ovaries (female); decreased cholesterol and phospholipid levels, testis weights, spermatogenesis, and spermatic giant cells in testes (male).

In a 28–day dermal study in rats (OPPTS 870.3200), the NOAEL was 250 (male), 60 (female) mg/kg/day. The LOAEL was 1,000 (male), 250 (female) mg/kg/day based on increased plasma glucose, triglyceride levels, and alkaline phosphatase activity and inflammatory cell infiltration in the liver and necrosis if single hepatocytes in females and hyaline change in renal tubules and a very slight reduction in body weight in males. At higher dose levels in females, chronic tubular lesions in the kidneys and inflammatory cell infiltration in the adrenal cortex were observed.

In a subchronic neurotoxicity screening study in rats (OPPTS 870.6200), the NOAEL was 95.4 (male), 216.4 (female) mg/kg/day, both at highest dose tested. The LOAEL was not determined. No treatment related observations at any dose level. LOAEL was not achieved. May not have been tested at sufficiently high dose levels; however, a new study is not required because the weight of the evidence from other toxicity studies indicates no evidence of concern.

5. *Chronic toxicity.* In a chronic toxicity study in dogs (OPPTS 870.4100), the NOAEL was 4.05 (male), 4.49 (female) mg/kg/day. The LOAEL was 21.0 (male), 24.6 (female) mg/kg/day based on increase of creatinine in both sexes, transient decrease in food consumption in females, and occasional increase in urea levels, decrease in ALT, and atrophy of seminiferous tubules in males.

In a mouse carcinogenicity study (OPPTS 870.4200), the NOAEL was 2.63 (male), 3.68 (female) mg/kg/day. The LOAEL was 63.8 (male), 87.6 (female) mg/kg/day based on hepatocyte hypertrophy, single cell necrosis, inflammatory cell infiltration, pigment deposition, foci of cellular alteration, hyperplasia of kupffer cells and increased mitotic activity, also an increase in the incidence of hepatocellular adenoma (both sexes). At higher doses, there was an increase in the incidence of hepatocelluar adenocarcinoma (both sexes) and the number of animals with multiple tumors, evidence of carcinogenicity.

In a combined chronic caricinogenicity study in rats (OPPTS 870.4300), the NOAEL was 21.0 (male), 50.3 (female) mg/kg/day. The LOAEL was 63.0 (male), 255 (female) mg/kg/day based on increased incidence of lymphocytic infiltration of the renal pelvis and chronic nephropathy in males and decreased body weight gain, slight increase in the severity of hemosiderosis of the spleen, foci of cellular alteration in liver and chronic tubular lesions in kidney in females. No evidence of carcinogenicity.

In a hepatic cell proliferation study in mice, the NOAEL was 16 (male), 20 (female)mg/kg/day. The LOAEL was 72 (male), 87 (female) mg/kg/day based on proliferative activity of hepatocytes. At higher dose levels, increases in absolute and relative liver weights, speckled liver, heptocellular glycogenesis/fatty change, heptocellular necrosis, apoptosis and pigmentation were observed.

In a 28–day feeding study to assess replicative DNA synthesis in the male rat, the NOAEL was 711 mg/kg/day. The LOAEL was not established. Immunohistochemical staining of liver sections from control and high dose animals for proliferating cell nuclear antigen gave no indication for a treatment related increase in the fraction of DNA syntesizing hepatocytes in S-phase. CGA293343 did not stimulate hepatocyte cell proliferation in male rats.

In a special study to assess liver biochemistry in the mouse, the NOAEL was 17 (male), 92 (female)mg/kg/day. The LOAEL was 74 (male), 92 (female) mg/kg/day based on marginal to slight increases in absolute and relative liver weights, a slight increase in the microsomal protein content of the livers, moderate increases in the cytochrome P450 content, slight to moderate increases in the activity of several microsomal enzymes, slight to

moderate induction of cytosolic glutathionw S-transfersase activity. Treatment did not affect peroxisomal fatty acid B-oxidation.

6. *Animal metabolism.* The metabolism of thiamethoxam in rats and livestock animals is adequately understood. The residues of concern have been determined to be parent thiamethoxam and its metabolite (N-(2-chloro-thiazol-5-ylmethyl)-N′ methyl-N′-nitro-guanidine.

7. *Metabolite toxicology.* For risk assessment purposes, residues of the metabolite corrected for molecular weight are considered to be toxicologically equivalent to parent thiamethoxam.

C. Aggregate Exposure

1. *Dietary exposure.* Permanent tolerances have been established (40 CFR 180.565) for the combined residues of the insecticide thiamethoxam, 3-[(2-chloro-5-thiazolyl) methyl] tetrahydro-5-methyl-N-nitro-4H-1,3,5-oxadiazin-4-imine and its metabolite (N-(2-chloro-thiazol-5-ylmethyl)-N′-methyl-N′-nitro-guanidine), in or on a variety of RACs at levels ranging from 0.02 ppm to 1.5 ppm (including barley, canola, cotton, sorghum, wheat, cucurbit vegetables, fruiting vegetables, pome fruits and livestock commodities). Pending tolerances include coffee, grapes, raisins, grape juice, pecans, peanut nutmeats, peanut hay, corn grain, sweet corn (kernal with husk removed), pop corn, corn forage and stover, head and stem brassica, leafy brassica greens and leafy vegetables.

i. *Food—a. Acute risk.* The acute dietary exposure evaluation (food only) for thiamethoxam (CGA–293343) was based on a point residue (highest average field trial residue value) DEEM acute analysis. This assessment was based on a Monte Carlo analysis (1,000 iterations) and utilized an acute endpoint of 100 mg/kg-bw/day (acute neurotoxicity study). Residue values for thiamethoxam (CGA–293343) and its corresponding acid metabolite (CGA–322704) were compiled using data from field trial studies. For those field trial samples which had non-detectable residues, a value of ½ the statistically derived limit of detection (½ sLOD) was used. Non-nursing infants (<1 year old) were the most sensitive subpopulation with a total exposure of 0.42% of the acute reference dose (aRfD). The next most sensitive subpopulation was all infants <1 year old) with an exposure of 0.37% of the aRfD. Acute exposure for the U.S. population was 0.12% of the aRfD at the 99.9th percentile of exposure. Therefore, it is expected that the proposed tolerances for corn commodities will have minimal impact on acute dietary risk and that the aggregate exposure will not exceed 100% of the acute RfD.

b. *Chronic and lifetime risk.* For the chronic and lifetime exposure assessments, all of the DEEM™ inputs including residue and percent of crop treated (%CT) for currently registered uses were from EPA's August 28, 2000 dietary exposure assessment on thiamethoxam (DP Barcode D268606, PC Code 060109). For these assessments, the 1996–1998 CSFII was used and %CT value for apples was 2%. All residue data were from field trials where thiamethoxam was applied at the maximum intended use rate and the samples were harvested at the minimum pre-harvest interval (PHI) to obtain maximum expected residues. All values from the EPA ''baseline'' assessment assumed one-half limit of quantitation (½ LOQ) for all non-detects in the field trial samples.

c. *Chronic risk.* The chronic dietary exposure from food use indicated that chronic dietary exposure from food utilizes 3.5% of the chronic RfD for the U.S. population and 7.9% of the chronic RfD for children 1–6 years old. Addition of corn field trial residues to the assessment caused a negligible increase in chronic exposure (0.1% for the U.S. population and 0.3% for children 1–6 years old). Therefore, the proposed tolerances for corn commodities will have minimal impact on chronic dietary risk and that the aggregate exposure will not exceed 100% of the chronic RfD.

d. *Lifetime risk.* Results from the lifetime dietary exposure analysis (food only) show that there are acceptable safety margins with respect to chronic exposures incurred by the dietary consumption of thiamethoxam-treated commodities, including corn. Lifetime exposures to the U.S. population (48 states, all seasons) resulted in a value of 8.13×10^{-7} which represents 81.3% of the lifetime risk limit of 1×10^{-6} This represents a slight increase (2.1%) in the lifetime risk of 7.92×10^{-7} (79.2%) associated with currently registered uses of thiamethoxam.

ii. *Drinking water.* EPA used the Pesticide Root Zone/Exposure Analysis Modeling System (PRZM/EXAMS) to estimate pesticide concentrations in surface water and SCI-GROW, which predicts pesticide concentrations in ground water. None of these models include consideration of the impact processing (mixing, dilution, or treatment) of raw water for distribution as drinking water would likely have on the removal of pesticides from the source water. The primary use of these models by the Agency at this stage is to provide a coarse screen for sorting out pesticides for which it is highly unlikely that drinking water concentrations would ever exceed human health levels of concern. Based on the SCI-GROW and PRZM/EXAMS models, EPA calculated that estimated environmental concentrations (EECs) of thiamethoxam at the highest use rate of 0.125 pound active ingredient per acre (lb a.i./acre) are 1.94 parts per billion (ppb) for acute and chronic exposure to ground water and 8 ppb and 0.6 ppb for acute and chronic exposure, respectively, to surface water. Based on both field and laboratory data, Syngenta predicts that the potential exposure to ground water is much lower than that predicted by the conservative SCI-GROW model. EPA determined EECs are used for comparison to drinking water levels of comparison (DWLOC).

a. *Acute risk.* Acute drinking water levels of comparison were calculated based on an acute populated adjusted dose (aPAD) of 0.1 mg/kg/day. For the acute assessment, the non-nursing infants (<1 year old) subpopulation generated the lowest acute DWLOC of approximately 996 ppb. EPA has determined that the surface water acute EEC is 8 ppb and the ground water EEC is 1.94 ppb. Since the surface water value is greater than the ground water value, the surface water value will be used for comparison purposes and will protect for any concerns for ground water concentrations. Since the acute DWLOC of 996 ppb is considerably higher than the acute EEC of 8 ppb, EPA should not have a concern for acute risk to either surface or ground water.

b. *Chronic risk.* Chronic drinking water levels of comparison were calculated based on a chronic populated adjusted dose (cPAD) of 0.0006 mg/kg/day. For the chronic assessment, the non-nursing infants subpopulation generated the lowest chronic DWLOC of approximately 5.5 ppb. EPA has determined that the surface water chronic EEC is 0.6 ppb and the ground water EEC is 1.94 ppb. Since the ground water value is greater than the surface water value, the ground water value will be used for comparison purposes and will protect for any concerns for surface water concentrations. Since the chronic DWLOC of 5.5 ppb is higher than the chronic EEC of 1.94 ppb, EPA should not have a concern for chronic risk to either surface or ground water.

c. *Cancer risk.* Based on currently registered uses for thiamethoxam, EPA has determined a drinking water level of comparison for cancer (cancer DWLOC) of 2.14 ppb based upon a 2% market share for apples. Based on the addition of the proposed corn seed treatment use,

the cancer DWLOC would be 2.12 ppb, representing only a minimal change. At the currently registered maximum use rate of 0.125 lb. a.i./acre per growing season, EPA has used the SCI-GROW model to predict a ground water EEC of 1.94 ppb; therefore, the cancer DWLOC (2.12 ppb) is not exceeded. For the proposed corn seed treatment uses, the maximum use rate on a per acre basis is 0.123 lb active ingredient. This maximum rate (0.123 lb) would be applicable only to field corn and would represent only 0.18% of all corn acres grown. Ninety-seven percent of thiamethoxam treated corn (5.4% of all corn acres grown) will be planted with a maximum rate on a per acre basis of 0.070 lbs a.i. per acre. Using EPA determined input values, the SCI-GROW model predicts an EEC of 1.90 ppb for the 0.123 lb rate and an EEC of 1.08 ppb for the 0.070 lb rate. Neither of these EECs (1.90 or 1.08 ppb) exceeds the cancer DWLOC (2.12 ppb).

The SCI-GROW model uses extremely conservative assumptions. However, even when using the conservative SCI-GROW model, it can be concluded that the proposed corn seed treatment use of thiamethoxam presents a negligible risk concern for exposure through drinking water.

2. *Non-dietary exposure.* Thiamethoxam is not currently registered for use on any sites that would result in residential exposure.

D. Cumulative Effects

The potential for cumulative effects of thiamethoxam and other substances that have a common mechanism of toxicity has also been considered. Thiamethoxam belongs to a new pesticide chemical class known as the neonicotinoids. There is no reliable information to indicate that toxic effects produced by thiamethoxam would be cumulative with those of any other chemical including another pesticide. Therefore, Syngenta believes it is appropriate to consider only the potential risks of thiamethoxam in an aggregate risk assessment.

E. Safety Determination

1. *U.S. population.* Syngenta concludes, as described above, that there is reasonable certainty that no harm to the U.S. population will result from aggregate acute or chronic dietary exposure to thiamethoxam residues including the proposed tolerances for corn commodities.

2. *Infants and children.* Syngenta concludes, as described above, that there is reasonable certainty that no harm to infants and children will result from aggregate acute or chronic exposure to thiamethoxam residues including the proposed tolerances for corn commodities.

F. International Tolerances

There are no codex MRLs established for residues of thiamethoxam on corn commodities.

[FR Doc. 02–16276 Filed 6–26–02; 8:45 am]

BILLING CODE 6560–50–S

ENVIRONMENTAL PROTECTION AGENCY

[OPP–2002–0124; FRL–7185–3]

Carbofuran; Receipt of Application for Emergency Exemption, Solicitation of Public Comment

AGENCY: Environmental Protection Agency (EPA).

ACTION: Notice.

SUMMARY: EPA has received a specific exemption request from the Louisiana Department of Agriculture and Forestry to use the pesticide carbofuran (CAS No. 1563–66–2) to treat up to 100,000 acres of rice to control the rice weevil. Because this application for an emergency exemption program involves the use of a chemical which has been the subject of a Special Review by EPA under 40 CFR part 154, EPA is soliciting public comment on the exemption.

DATES: Comments, identified by docket ID number OPP–2002–0124, must be received on or before July 2, 2002.

ADDRESSES: Comments may be submitted by mail, electronically, or in person. Please follow the detailed instructions for each method as provided in Unit I. of the **SUPPLEMENTARY INFORMATION**. To ensure proper receipt by EPA, it is imperative that you identify docket ID number OPP–2002–0124 in the subject line on the first page of your response.

FOR FURTHER INFORMATION CONTACT: Dan Rosenblatt, Registration Division (7505C), Office of Pesticide Programs, Environmental Protection Agency, 1200 Pennsylvania Ave., NW., Washington, DC 20460; telephone number: (703) 308–9366; fax number: (703) 308–5433; e-mail address: rosenblatt.dan@epa.gov.

SUPPLEMENTARY INFORMATION:

I. General Information

A. Does this Action Apply to Me?

You may be potentially affected by this action if you petition EPA for emergency exemption under section 18 of FIFRA. Potentially affected categories and entities may include, but are not limited to:

Categories	NAICS codes	Examples of potentially affected entities
State government	9241	State agencies that petition EPA for section 18 pesticide exemption

This listing is not intended to be exhaustive, but rather provides a guide for readers regarding entities likely to be regulated by this action. Other types of entities not listed in the table in this unit could also be regulated. The North American Industrial Classification System (NAICS) codes have been provided to assist you and others in determining whether or not this action applies to certain entities. To determine whether you or your business is affected by this action, you should carefully examine the applicability provisions in Unit II. If you have any questions regarding the applicability of this action to a particular entity, consult the person listed under **FOR FURTHER INFORMATION CONTACT**.

B. How Can I Get Additional Information, Including Copies of this Document and Other Related Documents?

1. *Electronically.* You may obtain electronic copies of this document, and certain other related documents that might be available electronically, from the EPA Internet Home Page at http://www.epa.gov/. To access this document, on the Home Page select ''Laws and Regulations,'' ''Regulations and Proposed Rules,'' and then look up the entry for this document under the ''**Federal Register**—Environmental Documents.'' You can also go directly to the **Federal Register** listings at http://www.epa.gov/fedrgstr/.

2. *In person.* The Agency has established an official record for this action under docket ID number OPP–2002–0124. The official record consists of the documents specifically referenced in this action, any public comments received during an applicable comment period, and other information related to this action, including any information claimed as Confidential Business

Information (CBI). This official record includes the documents that are physically located in the docket, as well as the documents that are referenced in those documents. The public version of the official record does not include any information claimed as CBI. The public version of the official record, which includes printed, paper versions of any electronic comments submitted during an applicable comment period, is available for inspection in the Public Information and Records Integrity Branch (PIRIB), Rm. 119, Crystal Mall #2, 1921 Jefferson Davis Hwy., Arlington, VA, from 8:30 a.m. to 4 p.m., Monday through Friday, excluding legal holidays. The PIRIB telephone number is (703) 305–5805.

C. How and to Whom Do I Submit Comments?

You may submit comments through the mail, in person, or electronically. To ensure proper receipt by EPA, it is imperative that you identify docket ID number OPP–2002–0124 in the subject line on the first page of your response.

1. *By mail*. Submit your comments to: Public Information and Records Integrity Branch (PIRIB), Information Resources and Services Division (7502C), Office of Pesticide Programs (OPP), Environmental Protection Agency, 1200 Pennsylvania Ave., NW., Washington, DC 20460.

2. *In person or by courier*. Deliver your comments to: Public Information and Records Integrity Branch (PIRIB), Information Resources and Services Division (7502C), Office of Pesticide Programs (OPP), Environmental Protection Agency, Rm. 119, Crystal Mall #2, 1921 Jefferson Davis Hwy., Arlington, VA. The PIRIB is open from 8:30 a.m. to 4 p.m., Monday through Friday, excluding legal holidays. The PIRIB telephone number is (703) 305–5805.

3. *Electronically*. You may submit your comments electronically by e-mail to: opp-docket@epa.gov, or you can submit a computer disk as described in Unit I.C.3. Do not submit any information electronically that you consider to be CBI. Avoid the use of special characters and any form of encryption. Electronic submissions will be accepted in WordPerfect 6.1/8.0 or ASCII file format. All comments in electronic form must be identified by docket ID number OPP–2002–0124. Electronic comments may also be filed online at many Federal Depository Libraries.

D. How Should I Handle CBI that I Want to Submit to the Agency?

Do not submit any information electronically that you consider to be CBI. You may claim information that you submit to EPA in response to this document as CBI by marking any part or all of that information as CBI. Information so marked will not be disclosed except in accordance with procedures set forth in 40 CFR part 2. In addition to one complete version of the comment that includes any information claimed as CBI, a copy of the comment that does not contain the information claimed as CBI must be submitted for inclusion in the public version of the official record. Information not marked confidential will be included in the public version of the official record without prior notice. If you have any questions about CBI or the procedures for claiming CBI, please consult the person listed under **FOR FURTHER INFORMATION CONTACT.**

E. What Should I Consider as I Prepare My Comments for EPA?

You may find the following suggestions helpful for preparing your comments:

1. Explain your views as clearly as possible.
2. Describe any assumptions that you used.
3. Provide copies of any technical information and/or data you used that support your views.
4. If you estimate potential burden or costs, explain how you arrived at the estimate that you provide.
5. Provide specific examples to illustrate your concerns.
6. Offer alternative ways to improve the notice.
7. Make sure to submit your comments by the deadline in this document.
8. To ensure proper receipt by EPA, be sure to identify the docket ID number assigned to this action in the subject line on the first page of your response. You may also provide the name, date, and **Federal Register** citation.

II. Background

A. What Action is the Agency Taking?

Under section 18 of the Federal Insecticide, Fungicide, and Rodenticide Act (FIFRA) (7 U.S.C. 136p), at the discretion of the Administrator, a Federal or State agency may be exempted from any provision of FIFRA if the Administrator determines that emergency conditions exist which require the exemption. Louisiana Department of Agriculture and Forestry has requested the Administrator to issue a specific exemption for the use of carbofuran on rice to control the rice weevil. Information in accordance with 40 CFR part 166 was submitted as part of this request.

In the emergency exemption application, the Applicant asserts that rice producers in Louisiana do not have adequate alternatives to control the rice weevil and that carbofuran is the only material that can be applied at this point in the growing season that will control this pest. The rice weevil has historically been an important pest for rice producers. The Applicant estimates that yield losses of 20 to 40% will be experienced if this pest is not controlled by the requested emergency program. The Applicant asserts that there are weaknesses and limitations for the alternative control measures that require use of carbofuran this growing season. In the past, granular carbofuran was commonly applied to control this pest in water-seeded rice. However, it is no longer registered for this use. The use of granular carbofuran, generally, was canceled following an agreement between FMC Corporation, the chemical's manufacturer, and EPA in 1991. For rice, use was permitted to continue until August 1999, after which distribution, sale, and use of existing stocks labeled for rice were not permitted.

Since the cancellation of granular carbofuran, EPA has registered alternative chemicals for insect control on rice. Notably, an alternative rice weevil product called fipronil (trade name, Icon) was approved by EPA in 1998. Fipronil is a contact and ingestion insecticide that can be applied early in the growing season to control rice weevils.

The main reason that the Applicant believes this exemption is warranted is the unexpected and novel efficacy failure of fipronil in many fields that were treated this year with that chemical. The efficacy issues connected to fipronil's performance this year in rice are believed to be connected with high levels of hydrogen sulfide gas which are building up in fields due to the presence of straw and stubble from the previous year's rice crop. The breakdown of this organic material under anaerobic conditions (this involves water-seeded rice) is believed to interfere with the performance of fipronil. The high level of organic material in the fields is connected to reduced or no-till soil management practices.

The Applicant also indicated that weather and equipment issues have prevented growers from using other alternative controls this year. Total yield loss estimates projected by the Applicant range from $6.6 to $13.2 million.

The Applicant proposed to make no more than one application of a granular

carbofuran product that contains 3% active ingredient to 100,000 acres of rice in Louisiana. The proposed application rate called for 15 to 20 pounds of product per acre (or 0.45 to 0.60 pound active ingredient per acre). Treatments may occur following permanent flood of the rice fields, but, at minimum, 60 days prior to harvest.

Because EPA received additional information from the Applicant in the days following the receipt of this request which heightened the urgency of this emergency exemption application from the standpoint of the growers, the Agency has already authorized a limited number of rice producers who are currently experiencing a high level of pest infestation as a result of efficacy failure following treatments of Icon (fipronil) to make treatments under this exemption. Specifically, on June 19, 2002, EPA issued a section 18 authorization which permits 6,000 pounds of carbofuran active ingredient to be applied to 10,000 acres of rice. The authorization limits treatments to those fields which were first treated with fipronil, but where, nonetheless, high levels of pest problems now exist. Information on this exemption request, including the June 19 authorization, is available at the Docket. Since granular carbofuran is generally cancelled at this time, another important factor that impacts the scope of this exemption is the level of available product. At this time, existing stocks of granular carbofuran could permit treatment to 2,500 acres of rice. New product would have to be manufactured for treatment of the additional 7,500 acres. Carbofuran is believed to be the only alternative chemical means of control at this point in the growing season.

EPA's decision to permit treatments of carbofuran for this use relates only to growers able to certify that they experienced performance failure connected to the use of fipronil. In addition, EPA anticipates that soil management practices will be adopted that diminish the likelihood of hydrogen sulfide build up in future growing seasons. Therefore, EPA does not anticipate that this emergency will be repeated.

EPA has decided to open a shortened comment period and solicit input and comments from the public for a 5 day period. In general, the length of a comment period on an emergency exemption application is 15 days. However, EPA is shortening this comment period to five days due to the limited time available to consider this request in light of the typical harvest period for rice in Louisiana and also a label provision for this use that requires a 60 day pre-harvest interval. Because of these factors, EPA determined that a 15 day comment period was not possible for this request.

The Agency is specifically seeking input from the public and stakeholders on the scope and use terms of this exemption connected to the acres that might be treated but for which there is currently no available product. In particular, due to the product availability issues mentioned above, a further determination related to the remaining 7,500 acres is needed. The public comments will help EPA determine whether the exemption should be revised to limit it to the 2,500 acres or maintained up to the 10,000 acre limit.

In order to obtain the greatest amount of input from this shortened comment period, EPA is directly contacting several key affected stakeholders in advance of this **Federal Register** publication. In addition, EPA is preparing a general notification plan to ensure that stakeholders are informed about this solicitation for comments.

The Agency will review and consider all comments received during the comment period in determining whether to maintain the exemption as granted on June 19, 2002 or modify the specific exemption such that use is limited to the 2,500 acres currently being treated with available product.

List of Subjects

Environmental protection, Pesticides and pests.

Dated: June 24, 2002.

Debra Edwards,

Acting Director, Registration Division, Office of Pesticide Programs.

[FR Doc. 02–16265 Filed 6–24–02; 3:07 pm]

BILLING CODE 6560–50–S

FEDERAL MARITIME COMMISSION

Notice of Agreement(s) Filed

The Commission hereby gives notice of the filing of the following agreement(s) under the Shipping Act of 1984. Interested parties can review or obtain copies of agreements at the Washington, DC offices of the Commission, 800 North Capitol Street, NW., Room 940. Interested parties may submit comments on an agreement to the Secretary, Federal Maritime Commission, Washington, DC 20573, within 10 days of the date this notice appears in the **Federal Register**.

Agreement No.: 011528–021.

Title: Japan/United States Eastbound Freight Conference.

Parties:

American President Lines, Ltd.,
Hapag-Lloyd Container Linie, GmbH,
Kawasaki Kisen Kaisha, Ltd.,
Mitsui O.S.K. Lines, Ltd.,
A.P. Moller-Maersk Sealand,
Nippon Yusen Kaisha,
Orient Overseas Container Line Limited,
P&O Nedlloyd B.V.,
P&O Nedlloyd Limited,
Wallenius Wilhelmsen Lines AS.

Synopsis: The proposed agreement amendment extends the suspension of the conference for another six months, through January 31, 2003.

Dated: June 21, 2002.

By Order of the Federal Maritime Commission.

Bryant L. VanBrakle,

Secretary.

[FR Doc. 02–16172 Filed 6–26–02; 8:45 am]

BILLING CODE 6730–01–P

FEDERAL MARITIME COMMISSION

Ocean Transportation Intermediary License Revocations

The Federal Maritime Commission hereby gives notice that the following Ocean Transportation Intermediary licenses have been revoked pursuant to section 19 of the Shipping Act of 1984 (46 U.S.C. app. 1718) and the regulations of the Commission pertaining to the licensing of Ocean Transportation Intermediaries, effective on the corresponding date shown below:

License Number: 15837N.
Name: Air Sea Containers, Inc.
Address: 2749 NW 82nd Avenue, Miami, FL 33122.
Date Revoked: May 12, 2002.
Reason: Failed to maintain a valid bond.

License Number: 17180F.
Name: American Logistic Co. Inc.
Address: 10840 Warner Avenue, Suite 205, Fountain Valley, CA 92708.
Date Revoked: May 23, 2002.
Reason: Failed to maintain a valid bond.

License Number: 10743NF.
Name: Edward M. Jones & Company, Inc.
Address: 2580 South 156th, Transiplex Bldg. A, Room 105, Seatac, WA 98158.
Date Revoked: May 17, 2002.
Reason: Failed to maintain valid bonds.

License Number: 16426N.
Name: First Express International Corp.

Address: 148–36 Guy R. Brewer Blvd., Suite 200, Jamaica, NY 11434.
Date Revoked: May 25, 2002.
Reason: Failed to maintain a valid bond.

License Number: 17200F.
Name: Global Forwarding Corp.
Address: 10420 NW 37th Terrace, Miami, FL 33178.
Date Revoked: May 12, 2002.
Reason: Failed to maintain a valid bond.

License Number: 4297F.
Name: Latin American Brokers, Inc.
Address: 1150 NW 72nd Avenue, #420, Miami, FL 33126.
Date Revoked: May 25, 2002.
Reason: Failed to maintain a valid bond.

License Number: 15102N.
Name: Oceanic Cargo, Inc.
Address: 10050 NW 116th Way, Suite 15, Medley, FL 33178.
Date Revoked: May 15, 2002.
Reason: Failed to maintain a valid bond.

License Number: 6053N.
Name: Sino-Am Marine Company, Inc.
Address: 601 East Linden Avenue, Linden, NJ 07036.
Date Revoked: May 25, 2002.
Reason: Failed to maintain a valid bond.

License Number: 3610NF.
Name: Sorenna.
Address: 3051 E. Maria Street, Rancho Dominguez, CA 90221.
Date Revoked: May 25, 2002.
Reason: Failed to maintain valid bonds.

License Number: 15030N.
Name: Super Container Line, Inc.
Address: 2801 NW 74th Avenue, Suite 223, Box 49, Miami, FL 33122.
Date Revoked: May 12, 2002.
Reason: Failed to maintain a valid bond.

License Number: 4144F.
Name: Trade Management Services, Inc.
Address: 3105 Silby Memorial Hwy., Eagan, MN 55121.
Date Revoked: May 23, 2002.
Reason: Failed to maintain a valid bond.

License Number: 16237N.
Name: Trans-Union Container Line, Inc.
Address: 5250 W. Century Blvd., Suite 312, Los Angeles, CA 90045.
Date Revoked: June 6, 2002.
Reason: Failed to maintain a valid bond.

License Number: 15460N.
Name: Trident Line Corp.
Address: 1200 Fuller Road, Linden, NJ 07036.
Date Revoked: May 12, 2002.
Reason: Failed to maintain a valid bond.

License Number: 13778N.
Name: Triton Shipping Co., Inc.
Address: 8081 NW 67th Street, Miami, FL 33166.
Date Revoked: May 25, 2002.
Reason: Failed to maintain a valid bond.

License Number: 2308F.
Name: United Van Lines International, Inc.
Address: One United Drive, Fenton, MO 63026.
Date Revoked: May 31, 2002.
Reason: Failed to maintain a valid bond.

License Number: 17354N.
Name: Wingar Logistics Inc.
Address: 9690 Telstar Avenue, Suite 207, El Monte, CA 91731.
Date Revoked: May 25, 2002.
Reason: Failed to maintain a valid bond.

Sandra L. Kusumoto,
Director, Bureau of Consumer Complaints and Licensing.

[FR Doc. 02–16207 Filed 6–26–02; 8:45 am]

BILLING CODE 6730–01–P

FEDERAL MARITIME COMMISSION

Ocean Transportation Intermediary License; Reissuances

Notice is hereby given that the following Ocean Transportation Intermediary licenses have been reissued by the Federal Maritime Commission pursuant to section 19 of the Shipping Act of 1984, as amended by the Ocean Shipping Reform Act of 1998 (46 U.S.C. app. 1718) and the regulations of the Commission pertaining to the licensing of Ocean Transportation Intermediaries, 46 CFR 515.

License No.	Name/address	Date reissued
13354N	Binex Line Corp., 21818 S. Wilmington Avenue, Suite 404, Long Beach, CA 90810	May 17, 2002.
14568F	Districargo, Inc., 8015 NW 29th Street, Miami, FL 33122	May 1, 2002.
16267N	Trident Transport, International, Inc., 215 West Diehl Road, Naperville, IL 60563	April 12, 2002.
15097N	United Globe Cargo, Inc., 2142 NW 99th Avenue, Miami, FL 33172	May 12, 2002.

Sandra L. Kusumoto,
Director, Bureau of Consumer Complaints and Licensing.

[FR Doc. 02–16206 Filed 6–26–02; 8:45 am]

BILLING CODE 6730–01–P

FEDERAL MARITIME COMMISSION

Ocean Transportation Intermediary License Applicants

Notice is hereby given that the following applicants have filed with the Federal Maritime Commission an application for license as a Non-Vessel Operating Common Carrier and Ocean Freight Forwarder—Ocean Transportation Intermediary pursuant to section 19 of the Shipping Act of 1984 as amended (46 U.S.C. app. 1718 and 46 CFR part 515).

Persons knowing of any reason why the following applicants should not receive a license are requested to contact the Office of Transportation Intermediaries, Federal Maritime Commission, Washington, DC 20573.

Non-Vessel Operating Common Carrier Ocean Transportation Intermediary Applicants

Trimex Group, Incorporated dba Trimex, Logistics, Inc. & Trimex International, Inc., 28312 Industrial Blvd., Suite C, Hayward, CA 94545. *Officers:* Kab Young Lee, Vice President, (Qualifying Individual); Edward S. Park, President.

Societe Monegasque de Transports Maritimes, (Somotransma) dba Uni Container Line (UCL), 14 Avenue Crovetto, 98000 Monaco. *Officers:* Claudie Ballestra, Manager, (Qualifying Individual); Edmond Ruelle, Administrator.

Intertech Associates (Atlantic) LLC, dba I. T. Logistics, 52 Poplar Avenue, Fair Haven, NJ 07704. *Officers:* Yong Zhao, Vice President, (Qualifying Individual); John Knapp, President.

Benison Trans, Corp., 325 W. 38th Street, #202, New York, NY 10019. *Officers:* Inho Cho, President, (Qualifying Individual); OK Y. Kim, Secretary.

American Global Forwarding, LLC, 125 NE., 9th Street, Miami, FL 33132. *Officers:* Richard G. Rovirosa,

Managing Partner, (Qualifying Individual); Frank V. Rovirosa, Managing Partner.

ACX Logistics, Inc., 9133 S. La Cienega Blvd., #260, Inglewood, CA 90301. *Officer:* Tsu-Wei Lin, President, (Qualifying Individual).

Non-Vessel Operating Common Carrier and Ocean Freight Forwarder Transportation Intermediary Applicants

VSH-United (U.S.A.) L.L.C., 8055 N.W. 77th Court, Suite #3, Medley, FL 33166. *Officers:* Jeanine M. Liong-A-San, Office Manager, (Qualifying Individual); Patrick Healy, Manager.

Universal Logistics Inc., 145–32 157th Street, Jamaica, NY 11434. *Officers:* Ming Wong, President, (Qualifying Individual).

Ocean Freight Forwarder—Ocean Transportation Intermediary Applicants

LCL America Inc., 29 Burgess Drive, Glendale Heights, IL 60139. *Officers:* Kathleen A. Marston, Vice President, (Qualifying Individual); Clayton D. Lyman, President.

Dated: June 21, 2002.

Bryant L. VanBrakle,

Secretary.

[FR Doc. 02–16205 Filed 6–26–02; 8:45 am]

BILLING CODE 6730–01–P

FEDERAL RESERVE SYSTEM

Change in Bank Control Notices; Acquisition of Shares of Bank or Bank Holding Companies

The notificants listed below have applied under the Change in Bank Control Act (12 U.S.C. 1817(j)) and § 225.41 of the Board's Regulation Y (12 CFR 225.41) to acquire a bank or bank holding company. The factors that are considered in acting on the notices are set forth in paragraph 7 of the Act (12 U.S.C. 1817(j)(7)).

The notices are available for immediate inspection at the Federal Reserve Bank indicated. The notices also will be available for inspection at the office of the Board of Governors. Interested persons may express their views in writing to the Reserve Bank indicated for that notice or to the offices of the Board of Governors. Comments must be received not later than July 11, 2002.

A. Federal Reserve Bank of Minneapolis (Julie Stackhouse, Vice President) 90 Hennepin Avenue, Minneapolis, Minnesota 55480–0291:

1. The R.J. Doornek Trust and R.J. Doornek, as an individual and trustee of the trust, Wolf Point, Montana; to gain control of Western Holding Company of Wolf Point, Wolf Point, Montana, and thereby indirectly gain control of Western Bank of Wolf Point, Wolf Point, Montana.

B. Federal Reserve Bank of San Francisco (Maria Villanueva, Consumer Regulation Group) 101 Market Street, San Francisco, California 94105–1579:

1. Frederick K. Freeman, Betty J. Freeman, Suzanne L. McQuaid, Amy C. Schreck, and Bellevue Square Managers I Limited Partnership, Bellevue, Washington, to retain voting shares of First Mutual Bancshares, Inc., Bellevue, Washington, and thereby indirectly retain voting shares of First Mutual Bank, Bellevue, Washington.

Board of Governors of the Federal Reserve System, June 21, 2002.

Robert deV. Frierson,

Deputy Secretary of the Board.

[FR Doc. 02–16213 Filed 6–26–02; 8:45 am]

BILLING CODE 6210–01–S

FEDERAL RESERVE SYSTEM

Formations of, Acquisitions by, and Mergers of Bank Holding Companies

The companies listed in this notice have applied to the Board for approval, pursuant to the Bank Holding Company Act of 1956 (12 U.S.C. 1841 *et seq.*) (BHC Act), Regulation Y (12 CFR part 225), and all other applicable statutes and regulations to become a bank holding company and/or to acquire the assets or the ownership of, control of, or the power to vote shares of a bank or bank holding company and all of the banks and nonbanking companies owned by the bank holding company, including the companies listed below.

The applications listed below, as well as other related filings required by the Board, are available for immediate inspection at the Federal Reserve Bank indicated. The application also will be available for inspection at the offices of the Board of Governors. Interested persons may express their views in writing on the standards enumerated in the BHC Act (12 U.S.C. 1842(c)). If the proposal also involves the acquisition of a nonbanking company, the review also includes whether the acquisition of the nonbanking company complies with the standards in section 4 of the BHC Act (12 U.S.C. 1843). Unless otherwise noted, nonbanking activities will be conducted throughout the United States. Additional information on all bank holding companies may be obtained from the National Information Center website at www.ffiec.gov/nic/.

Unless otherwise noted, comments regarding each of these applications must be received at the Reserve Bank indicated or the offices of the Board of Governors not later than July 22, 2002.

A. Federal Reserve Bank of St. Louis (Randall C. Sumner, Vice President) 411 Locust Street, St. Louis, Missouri 63166–2034:

1. First Delta Bankshares, Inc., Blytheville, Arkansas; to acquire 100 percent of the voting shares of Bank of Trumann, Trumann, Arkansas.

2. Mid-Missouri Bancshares, Inc., Springfield, Missouri; to acquire 22.25 percent of the voting shares of Central States Bancshares, Inc., Springfield, Missouri, and thereby indirectly acquire voting shares of Webb City Bank, Webb City, Missouri.

3. Tri-County Bancshares, Inc., Beecher City, Illinois; to become a bank holding company by acquiring 100 percent of the voting shares of First State Bank of Beecher City, Beecher City, Illinois.

B. Federal Reserve Bank of Kansas City (Susan Zubradt, Assistant Vice President) 925 Grand Avenue, Kansas City, Missouri 64198–0001:

1. Nebraska Bankshares, Inc., Farnam, Nebraska; to retain 12.7 percent and to acquire an additional .3 percent , for a total of 13 percent of the voting shares of Stockmens Financial Corporation, Rapid City, South Dakota, and thereby indirectly acquire additional voting shares of Security First Bank, Sidney, Nebraska; BW Holdings, Inc., Castle Rock, Colorado; and BankWest, Castle Rock, Colorado.

Board of Governors of the Federal Reserve System, June 21, 2002.

Robert deV. Frierson,

Deputy Secretary of the Board.

[FR Doc. 02–16212 Filed 6–26–02; 8:45 am]

BILLING CODE 6210–01–S

FEDERAL RESERVE SYSTEM

[Docket No. R–1124]

Privacy Act of 1974; Notice of Amendment of System of Records

AGENCY: Board of Governors of the Federal Reserve System.

ACTION: Notice; amendment of one system of records.

SUMMARY: In accordance with the Privacy Act, the Board of Governors of the Federal Reserve System (Board) is publishing notice of the amendment of one system of records, entitled SCF-Survey of Consumer Finances (BGFRS–20). We invite public comment on this amended system of records.

DATES: Comments must be received on or before July 29, 2002.

ADDRESSES: Comments, which should refer to Docket No. R–1124, may be mailed to Ms. Jennifer J. Johnson, Secretary, Board of Governors of the Federal Reserve System, 20th Street and Constitution Avenue, NW., Washington, DC 20551 or mailed electronically to *regs.comments@federalreserve.gov.* Comments addressed to Ms. Johnson also may be delivered to the Board's mail room between 8:45 a.m. and 5:15 p.m. weekdays and to the security control room outside of those hours. The mail room and the security control room are accessible from the Eccles Building courtyard entrance, located on 20th Street between Constitution Avenue and C Street, NW. Comments may be inspected in Room MP–500 between 9 a.m. and 5 p.m. on weekdays pursuant to § 261.12, except as provided in § 261.14, of the Board's Rules Regarding Availability of Information, 12 CFR 261.12 and 261.14.

FOR FURTHER INFORMATION CONTACT: Arthur Kennickell, Project Director, Division of Research and Statistics (202/452–2247); or Elaine M. Boutilier, Managing Senior Counsel, Legal Division (202/452–2418), Board of Governors of the Federal Reserve System, 20th Street and Constitution Avenue, NW., Washington, DC 20551. For users of the Telecommunications Device for the Deaf (TDD) only, contact 202/263–4869.

SUPPLEMENTARY INFORMATION: The Board is amending its system of records for the Survey of Consumer Finances (SCF), to reflect the change in the independent contractor used to conduct the survey and to update the description of the records maintained in the system. This system of records contains statistical information regarding a periodic (every three years) survey that the Board has sponsored since 1983 to obtain information on the current state of U.S. households' finances. Approximately 5000 households voluntarily agree to respond to a survey questionnaire, which is administered through a detailed interview, conducted either in person or by telephone at the convenience of the participant. The names and addresses of each participant are confidential, and extraordinary steps are taken to uncouple the identities of the participants from the information they provide. The data collected provide a representative picture of what Americans own—from houses and cars to stocks and bonds—how and how much they borrow and how they bank.

In accordance with 5 U.S.C. 552a(r), a report of this amended system of records is being filed with the Chair of the House Committee on Government Reform and Oversight, the Chair of the Senate Committee on Governmental Affairs, and the Office of Management and Budget. This new system of records will become effective on August 1, 2002, without further notice, unless the Board publishes a notice to the contrary in the **Federal Register**.

BGFRS–20

SYSTEM NAME:

SCF—Survey of Consumer Finances.

SECURITY CLASSIFICATION:

None.

SYSTEM LOCATION(S):

(1) National Opinion Research Center at the University of Chicago (NORC), 155 East 60th Street, Chicago, IL 60637.

(2) Board of Governors of the Federal Reserve System, 20th & C Streets, NW, Washington, DC 20551.

CATEGORIES OF INDIVIDUALS COVERED BY THE SYSTEM:

Every three years beginning in 1983, the Board of Governors of the Federal Reserve System (Board) has sponsored a survey of U.S. households to obtain information on the current state of households' finances. For each instance of the survey, a national sample of approximately 10,000 households is selected using two statistical sampling procedures. Approximately 5,000 households voluntarily agree to participate in a detailed interview, which is conducted either in person or by telephone at the convenience of the participant.

CATEGORIES OF RECORDS IN THE SYSTEM:

(1) NORC, the independent contractor for survey data collection, holds three types of files:

(a) Answers given by survey participants in the course of the administration of the survey questionnaire. No identifying information is included in this category.

(b) Answers given by interviewers to questions about the administration, or attempted administration, of the survey interview, and answers given by interviewers to questions about the area around the sample addresses. No identifying information is included in this category.

(c) A control file containing the name, address, other identifying or locating characteristics of members of the survey sample, and technical information describing survey participation.

(2) The Board holds five types of files:

(a) All information included in (1)(a) and (1)(b).

(b) A control file containing general geographic characteristics and technical information describing survey participation. No identifying information is included in this category.

(c) For a part of the survey sample, information from statistical records derived from individual tax returns, including a social security number but containing no other identifying information.

(d) Files of information matched to the survey data by high-level characteristics, such as general location, occupation, banking market, etc. No identifying information is included in this category.

AUTHORITY FOR MAINTENANCE OF THE SYSTEM:

12 U.S.C. 225a and 15 U.S.C. 1601 note.

PURPOSE(S):

The data in the system described as (1)(a) under ''Categories of records in the system'' provide a basis for the statistical analysis of consumer financial status and behavior. All other information in the system is used for the statistical purposes of structuring, conducting, and processing the survey.

Data in the system from (1)(a) and (1)(b) and unidentified data from (1)(c) are used by staff at the Board to address policy and other statistical research questions in economics and topics of technical survey methodology. A version of the data described as (1)(a) under ''Categories of records in the system'' is further processed statistically to minimize the possibility of identification of survey participants based on characteristics or combinations of characteristics in the data; that altered information is made available to the public. The public version of the data forms a key part of the national statistical system and provides a basis for a wide variety of government, academic, and other statistical research.

The system is maintained for statistical purposes only and is not used in whole or in part in making any determination about benefits or other rights of any identifiable individual. It consist solely of ''statistical records'' as defined in the Privacy Act (5 U.S.C. 552(a)(6)).

ROUTINE USES OF RECORDS MAINTAINED IN THE SYSTEM, INCLUDING CATEGORIES OF USERS AND THE PURPOSE OF SUCH USES:

a. Prior to the completion of data collection, the survey contractor uses information in the system to devise and attempt to execute a plan to request an interview with all members of the survey sample; access to such information is available only to those

involved in the sample design and its implementation in the field.

b. Upon completion of data collection, access by the contractor to the system is limited to the specific information necessary to complete the initial processing of the data and to respond to requests from survey participants.

c. At the Board, access to data from the system is available only to staff members who have the primary responsibility for conducting and processing the survey. Access by those individuals is allowed for the following purposes: structuring, conducting, and preparing the survey data and performing statistical analysis of the data. A particularly important routine activity of these responsible individuals is a close review of the individual records described as (1)(a) under ''Categories of records in the system'' for preparation of a public version of the data that has been subjected to statistical procedures to minimize the possibility that any participant might be identified by a characteristic or set of characteristics in the data.

d. Disclosure may be made to a congressional office from the record of an individual in response to an inquiry from the congressional office on behalf of that individual.

DISCLOSURE TO CONSUMER REPORTING AGENCIES:

Not applicable.

POLICIES AND PRACTICES FOR STORING, RETRIEVING, ACCESSING, RETAINING, AND DISPOSING OF RECORDS IN THE SYSTEM:

STORAGE:

Magnetic disks, CD–ROMs, magnetic tape.

RETRIEVABILITY:

The contractor stores data described at (1)(a) and (1)(b) under ''Categories of records in the system'' in an electronic form separately from identifying information described in (1)(c). A set of identification numbers generated for administrative purposes may be used to link these files, but access to linked information is restricted to purposes necessary for the collection and preliminary processing of the survey data. The responsible staff at the Board maintain files described at (2)(c) separately from other files. A set of identification numbers may be used to link the information described at (2)(c) with the other information, and access to such information is restricted to those among the responsible staff with particular needs in structuring, conducting, preparing, and analyzing the survey data.

SAFEGUARDS:

During periods of data collection, the survey contractor limits access to identifying information only to staff directly engaged in data collection, managing the survey, and processing the data; access varies according to what is needed to perform each task; identifying information is maintained in files separate from other data. After the completion of data collection, personnel at the facilities of the contractor are allowed to have access to information that would identify members of the survey sample only for specific purposes authorized by their project director, and that are connected with attempts to validate whether the correct person was interviewed, to address other narrow statistical issues, or to respond to requests from sample members for information. All electronic files are held in secure computer systems, and paper files are held in locked cabinets.

At the Board, all potentially identifiable files are maintained in secure computer systems, locked files, or locked cabinets, and access to those files is restricted to staff directly responsible for the production of the survey.

RETENTION AND DISPOSAL:

All files containing identifying information held by NORC are destroyed within three years of the completion of work on a given execution of the SCF; all backup records used to maintain the integrity of such files are also destroyed. All files maintained by the Board will be maintained until such time as the survey may be discontinued, at which time all files containing identifying information will be destroyed except as otherwise required by law governing preservation of archival records. A version of the SCF, statistically altered to protect the identity of the survey participants, is placed in the public domain.

SYSTEMS MANAGER(S) AND ADDRESS:

Arthur Kennickell, Project Director, Survey of Consumer Finances, Monetary and Financial Studies Section, Division of Research and Statistics, Board of Governors of the Federal Reserve System, Washington, DC 20551.

NOTIFICATION PROCEDURE:

An individual requesting notice as to whether this system contains information pertaining to him or her should write to the government project director, at the address shown below, enclosing a notarized statement of his or her full name and current address. Simultaneously, with requesting notification of inclusion in the system of records, the individual may request record access as described in the following section ''Record access procedures.''

Arthur Kennickell, Project Director, Survey of Consumer Finances, Monetary and Financial Studies Section, Division of Research and Statistics, Room M–1412, Board of Governors of the Federal Reserve System, Washington, DC 20551.

RECORD ACCESS PROCEDURES:

Individuals who, through the notification procedures set out above, have established that the system of records contains information pertaining to them may request access to those records by writing to the government project director at the address given above. The government project director will notify the individual as to the place and time for access to the record(s). If the requester prefers, and if the information requested is not too voluminous, the material may be mailed.

CONTESTING RECORD PROCEDURES:

Individuals who seek to contest records in this system should contact the government project director at the address given above, reasonably identify the record(s), specify the information being contested and the rationale for the challenge, and supply the information to be substituted.

RECORD SOURCE CATEGORIES:

Answers to survey questions are obtained from participants. Other information about the steps taken to obtain an interview, the progress of the interview, and the general characteristics of the neighborhood of the sample address, is obtained from the survey interviewers. Technical sample design information for a geographically based part of the survey sample is obtained from NORC; for sample members in the other part of the sample, statistical records derived from individual tax returns are obtained from the Statistics of Income Division of the Internal Revenue Service.

SYSTEM EXEMPTED FROM CERTAIN PROVISIONS OF THE ACT:

None.

By order of the Board of Governors of the Federal Reserve System, acting through the Secretary of the Board under delegated authority, June 20, 2002.

Jennifer J. Johnson,

Secretary of the Board.

[FR Doc. 02–16192 Filed 6–26–02; 8:45 am]

BILLING CODE 6210–01–P

OFFICE OF GOVERNMENT ETHICS

Review of Criminal Conflict of Interest Statutes; Opportunity for Comment

AGENCY: Office of Government Ethics (OGE).

ACTION: Notice.

SUMMARY: The Office of Government Ethics is conducting a review of the criminal conflict of interest statutes, 18 U.S.C. 202–209. This notice provides the public and agencies an opportunity to comment.

DATES: July 29, 2002.

ADDRESSES: Send any comments to the Office of Government Ethics, Suite 500, 1201 New York Avenue, NW., Washington, DC 20005–3917, Attention: Mr. Stuart D. Rick. Comments also may be sent electronically to OGE's Internet E-mail address at *usoge@oge.gov.* For E-mail messages, the subject line should include the following reference—''Comments Regarding Criminal Conflict of Interest Law Review.''

FOR FURTHER INFORMATION CONTACT: Stuart D. Rick, Deputy General Counsel, Office of Government Ethics; Telephone: 202–208–8000; TDD: 202–208–8025; FAX: 202–208–8037.

SUPPLEMENTARY INFORMATION: In a report to Congress last year, the Office of Government Ethics announced its intention to examine whether the criminal conflict of interest laws could be simplified or otherwise improved without sacrificing the necessary protection they provide for a fair and impartial Government process. Office of Government Ethics, *Report on Improvements to the Financial Disclosure Process for Presidential Nominees* 21–22 (April 2001) (available on OGE's website, *www.usoge.gov,* under ''Forms, Publications & Other Ethics Documents''). Pursuant to its authorities under section 402 of the Ethics in Government Act of 1978, as amended (5 U.S.C. appendix), the Office of Government Ethics is now conducting a review of these statutes, which are codified at 18 U.S.C. 202–209.

The Office of Government Ethics is evaluating whether the conflict of interest laws are adequately tailored to their legislative purposes, in light of the realities of modern Government. The conflict of interest statutes have existed in more or less their current form for nearly 40 years, and the last comprehensive examination of the conflict of interest statutes occurred in 1989. *See To Serve With Honor: Report of the President's Commission on Federal Ethics Law Reform* (March 1989). Since that time, a number of developments have occurred, including, among others: sustained Government efforts toward privatization of certain functions; a growing emphasis on commercialization of Government-developed products; ever-increasing reliance on personnel with scientific and technological expertise; and a series of decisions by the courts that have called into question the appropriate scope of certain restrictions on the outside activities of Federal employees, *e.g., Van Ee* v. *EPA,* 202 F.3d 296 (D.C. Cir. 2000). The Office of Government Ethics' own experience in applying these laws over the years has led us to question whether some of the current restrictions may be unnecessarily broad. At the same time, we also believe there may be areas in which the current laws are too narrow to address real conflicts.

As part of its review, OGE invites members of the public to express their views concerning the need for change to the criminal conflict of interest statutes. Interested persons may submit written comments to OGE by July 29, 2002. Although numerous agency ethics officials already have provided comments concerning this matter in written submissions and/or meetings with OGE, any interested agencies also are invited to submit any additional comments they may have in response to this notice.

Approved: June 20, 2002.

Amy L. Comstock,

Director, Office of Government Ethics.

[FR Doc. 02–16256 Filed 6–26–02; 8:45 am]

BILLING CODE 6345–01–P

DEPARTMENT OF HEALTH AND HUMAN SERVICES

National Committee on Vital and Health Statistics: Meeting

Pursuant to the Federal Advisory Committee Act, the Department of Health and Human Services announces the following advisory committee meeting.

Name: National Committee on Vital and Health Statistics (NCVHS), Subcommittee on Populations.

Time and Date: 8:30 a.m. to 5 p.m., July 18, 2002.

Place: Hubert H. Humphrey Building, Room 705A, 200 Independence Avenue SW., Washington, DC 20201.

Status: Open.

Purpose: The Subcommittee on Populations, NCVHS, is holding a hearing to discuss issues relating to statistics for the determination of health disparities in racial and ethnic populations. The focus will be on State related issues in the collection and use of data on race and ethnicity. Invited panelists will address State and local collection of data and race and ethnicity, use of mixed race data, measurement of ethnic identity and perspectives on variables beyond race and ethnicity needed to determine health disparities in racial and ethnic groups.

Notice: In the interest of security, the Department has instituted stringent procedures for entrance to the Hubert H. Humphrey building by non-government employees. Thus, persons without a government identification card will need to have the guard call for an escort to the meeting.

Contact Person for More Information: Substantive program information as well as summaries of meetings and a roster of committee members may be obtained from Susan G. Queen, Ph.D., Deputy Director, Division of Information and Analysis, Health Resources and Services Administration, Room 11–05, 5600 Fishers Lane, Rockville, MD 20857, telephone: (301) 443–1129; or Marjorie S. Greenberg, Executive Secretary, NCVHS, National Center for Health Statistics, Centers for Disease Control and Prevention, Room 1100, Presidential Building, 6525 Belcrest Road, Hyattsville, Maryland 20782, telephone: (301) 458–4245. Information also is available on the NCVHS home page of the HHS Web site: *http://www.ncvhs.hhs.gov/* where an agenda for the meeting will be posted when available.

Dated: June 18, 2002.

James Scanlon,

Director, Division of Data Policy, Office of the Assistant Secretary for Planning and Evaluation.

[FR Doc. 02–16180 Filed 6–26–02; 8:45 am]

BILLING CODE 4151–05–M

DEPARTMENT OF HEALTH AND HUMAN SERVICES

Centers for Disease Control and Prevention

[60Day–02–63]

Proposed Data Collections Submitted for Public Comment and Recommendations

In compliance with the requirement of section 3506(c)(2)(A) of the Paperwork Reduction Act of 1995 for opportunity for public comment on proposed data collection projects, the Centers for Disease Control and Prevention (CDC) will publish periodic summaries of proposed projects. To

request more information on the proposed projects or to obtain a copy of the data collection plans and instruments, call the CDC Reports Clearance Officer on (404) 498–1210.

Comments are invited on: (a) Whether the proposed collection of information is necessary for the proper performance of the functions of the agency, including whether the information shall have practical utility; (b) the accuracy of the agency's estimate of the burden of the proposed collection of information; (c) ways to enhance the quality, utility, and clarity of the information to be collected; and (d) ways to minimize the burden of the collection of information on respondents, including through the use of automated collection techniques or other forms of information technology. Send comments to Anne O'Connor, CDC Assistant Reports Clearance Officer, 1600 Clifton Road, MS–D24, Atlanta, GA 30333. Written comments should be received within 60 days of this notice.

Proposed Project: Assisted Reproductive Technology (ART) Program Reporting System, (OMB No. 0920–0556)—Extension—National Center for Chronic Disease Prevention and Health Promotion (NCCDPHP), Centers for Disease Control and Prevention (CDC).

Background: Section 2(a) of Pub. L. 102–493 (known as the Fertility Clinic Success Rate and Certification Act of 1992 (FCSRCA), 42 U.S.C. 263a–1(a)) requires that each assisted reproductive technology (ART) program shall annually report to the Secretary through the Centers for Disease Control and Prevention—(1) pregnancy success rates achieved by such ART program, and (2) the identity of each embryo laboratory used by such ART program and whether the laboratory is certified or has applied for such certification under this act.

The Centers for Disease Control and Prevention (CDC) is seeking to extend approval of a reporting system for Assisted Reproductive Technology (ART) Program from the Office of Management and Budget (OMB). This reporting system has been designed in collaboration with the Society for Assisted Reproductive Technology (SART) to comply with the requirements of the FCSRCA. The reporting system includes all ART cycles initiated by any of the approximately 400 ART programs in the United States, and covers the pregnancy outcome of each cycle, as well as a number of data items deemed important to explain variability in success rates across clinics and across individuals. Data is to be collected through computer software developed by SART in consultation with CDC.

In developing the definition of pregnancy success rates and the list of data items to be reported, CDC has consulted with representatives of SART, the American Society for Reproductive Medicine, and RESOLVE, the National Infertility Association (a national, nonprofit consumer organization), as well as a variety of individuals with expertise and interest in this field. The average annual cost to the respondent, including data entry labor and fees, is estimated to be $2,140.

Respondents	Number of respondents	Number of responses/respondent	Average burden/response (in hours)	Total burden (in hours)
ART Clinics	400	220	5/60	7,333
Total				7,333

Dated: June 20, 2002.

Nancy E. Cheal,

Acting Deputy Director for Policy, Planning and Evaluation, Centers for Disease Control and Prevention.

[FR Doc. 02–16178 Filed 6–26–02; 8:45 am]

BILLING CODE 4163–18–P

DEPARTMENT OF HEALTH AND HUMAN SERVICES

Centers for Disease Control and Prevention

Translation Advisory Committee for Diabetes Prevention and Control Programs: Notice of Charter Renewal

This gives notice under the Federal Advisory Committee Act (Public Law 92–463) of October 6, 1972, that the Translation Advisory Committee for Diabetes Prevention and Control Programs of the Centers for Disease Control and Prevention, of the Department of Health and Human Services, has been renewed for a 2-year period extending through June 15, 2004.

FOR FURTHER INFORMATION CONTACT: Frank Vinicor, M.D., Executive Secretary, Translation Advisory Committee for Diabetes Prevention and Control Programs, Centers for Disease Control and Prevention, of the Department of Health and Human Services, 1600 Clifton Road, NE., m/s K–10, Atlanta, Georgia 30341–3724. Telephone (770) 488–5000, or fax (770) 488–5966.

The Director, Management Analysis and Services Office, has been delegated the authority to sign **Federal Register** notices pertaining to announcements of meetings and other committee management activities, for both the Centers for Disease Control and Prevention and the Agency for Toxic Substances and Disease Registry.

Dated: June 21, 2002.

John Burckhardt,

Acting Director, Management Analysis and Services Office, Centers for Disease Control and Prevention.

[FR Doc. 02–16223 Filed 6–26–02; 8:45 am]

BILLING CODE 4163–18–P

DEPARTMENT OF HEALTH AND HUMAN SERVICES

Centers for Disease Control and Prevention

Disease, Disability, and Injury Prevention and Control Special Emphasis Panel: Traumatic Brain Injury Follow-Up Registry and Surveillance of Traumatic Brain Injury in the Emergency Department, Program Announcement #02073

In accordance with section 10(a)(2) of the Federal Advisory Committee Act (Pub. L. 92–463), the Centers for Disease Control and Prevention (CDC) announces the following meeting:

Name: Disease, Disability, and Injury Prevention and Control Special Emphasis Panel (SEP): Traumatic Brain Injury Follow-Up Registry and Surveillance of Traumatic Brain Injury in the Emergency Department, Program Announcement #02073.

Times and Dates: 2 p.m.–2:15 p.m., July 12, 2002 (Open); 2:15 p.m.–4 p.m., July 12, 2002 (Closed).

Place: Teleconference number: 800.713.1971.

Status: Portions of the meeting will be closed to the public in accordance with provisions set forth in section 552b(c) (4) and

(6), Title 5 U.S.C., and the Determination of the Director, Management Analysis and Services Office, CDC, pursuant to Public Law 92–463.

Matters To Be Discussed: The meeting will include the review, discussion, and evaluation of applications received in response to PA# 02073.

Contact Person for More Information: Dr. Richard Sattin, Associate Director for Science, National Center for Injury Prevention and Control, CDC, 2495 Flowers Road, Atlanta, Georgia 30341; 770.488.4330.

The Director, Management Analysis and Services Office has been delegated the authority to sign **Federal Register** notices pertaining to announcements of meetings and other committee management activities, for both the Centers for Disease Control and Prevention and the Agency for Toxic Substances and Disease Registry.

Dated: June 21, 2002.

John C. Burckhardt,

Acting Director, Management Analysis and Services Office, Centers for Disease Control and Prevention (CDC).

[FR Doc. 02–16224 Filed 6–26–02; 8:45 am]

BILLING CODE 4163–18–P

DEPARTMENT OF HEALTH AND HUMAN SERVICES

Centers for Disease Control and Prevention

[Program Announcement #02003]

Disease, Disability, and Injury Prevention and Control Special Emphasis Panel: Community-Based Participatory Prevention Research

In accordance with section 10(a)(2) of the Federal Advisory Committee Act (Pub. L. 92–463), the Centers for Disease Control and Prevention (CDC) announces the following meeting:

Name: Disease, Disability, and Injury Prevention and Control Special Emphasis Panel (SEP): Community-Based Participatory Prevention Research, Program Announcement #02003, Supplemental Review.

Times and Dates: 10 a.m.–10:25 a.m., July 8, 2002 (Open), 10:30 a.m.–12 noon, July 8, 2002 (Closed).

Place: Teleconference number: 404.639.4100, Conference Code 935293.

Status: Portions of the meeting will be closed to the public in accordance with provisions set forth in section 552b(c) (4) and (6), Title 5 U.S.C., and the Determination of the Director, Management Analysis and Services Office, CDC, pursuant to Public Law 92–463.

Matters to be Discussed: The meeting will include the review, discussion, and evaluation of applications received in response to PA# 02003.

Note: Due to administrative oversight, this notice is being published less than fifteen days prior to the meeting date.

Contact Person for More Information: Theodore J. Meinhardt, Associate Director for Management and Operations, 4770 Buford Highway, MS–K38, Atlanta, Georgia 30341, 770.488.2505.

The Director, Management Analysis and Services Office has been delegated the authority to sign **Federal Register** notices pertaining to announcements of meetings and other committee management activities, for both the Centers for Disease Control and Prevention and the Agency for Toxic Substances and Disease Registry.

Dated: June 21, 2002.

John C. Burckhardt,

Acting Director, Management Analysis and Services Office, Centers for Disease Control and Prevention (CDC).

[FR Doc. 02–16298 Filed 6–26–02; 8:45 am]

BILLING CODE 4163–18–P

DEPARTMENT OF HEALTH AND HUMAN SERVICES

Food and Drug Administration

[Docket No. 02N–0259]

Agency Information Collection Activities; Proposed Collection; Comment Request; Telephone Questionnaire Administration to Control Subjects Recruited into FDA Lyme Vaccine Safety Study, ''A Case-Control Study of HLA Type and T-Cell Reactivity to Recombinant Outer Surface Protein A and Human Leukocyte Function-Associated Antigen-1''

AGENCY: Food and Drug Administration, HHS.

ACTION: Notice.

SUMMARY: The Food and Drug Administration (FDA) is announcing an opportunity for public comment on the proposed collection of certain information by the agency. Under the Paperwork Reduction Act of 1995 (the PRA), Federal agencies are required to publish notice in the **Federal Register** concerning each proposed collection of information, and to allow 60 days for public comment in response to the notice. This notice solicits comments on the use of a survey questionnaire to be administered by telephone interview to control subjects recruited into and participating in a vaccine safety study conducted by FDA to investigate reports of arthritis following administration of the Lyme disease vaccine. Informed consent for administration of this questionnaire will have been received prior to the interview, and the interview is to be conducted at a time specified by the control subject at the time of initial recruitment into this study. This questionnaire is an abridged version of one used in followup survey interviews with persons reported to the national Vaccine Adverse Event Reporting System (VAERS) as having developed joint problems or arthropathy following Lyme disease vaccine administration.

DATES: Submit written or electronic comments on the collection of information by August 26, 2002.

ADDRESSES: Submit electronic comments on the collection of information to http://www.accessdata.fda.gov/scripts/oc/dockets/edockethome.cfm. Submit written comments on the collection of information to the Dockets Management Branch (HFA–305), Food and Drug Administration, 5630 Fishers Lane, rm. 1061, Rockville, MD 20852. All comments should be identified with the docket number found in brackets in the heading of this document.

FOR FURTHER INFORMATION CONTACT: Jonna Capezzuto, Office of Information Resources Management (HFA–250), Food and Drug Administration, 5600 Fishers Lane, Rockville, MD 20857, 301–827–4659.

SUPPLEMENTARY INFORMATION: Under the PRA (44 U.S.C. 3501–3520), Federal agencies must obtain approval from the Office of Management and Budget (OMB) for each collection of information they conduct or sponsor. ''Collection of information'' is defined in 44 U.S.C. 3502(3) and 5 CFR 1320.3(c) and includes agency requests or requirements that members of the public submit reports, keep records, or provide information to a third party. Section 3506(c)(2)(A) of the PRA (44 U.S.C. 3506(c)(2)(A)) requires Federal agencies to provide a 60-day notice in the **Federal Register** concerning each proposed collection of information, before submitting the collection to OMB for approval. To comply with this requirement, FDA is publishing notice of the proposed collection of information set forth in this document.

With respect to the following collection of information, FDA invites comments on: (1) Whether the proposed collection of information is necessary for the proper performance of FDA's functions, including whether the information will have practical utility; (2) the accuracy of FDA's estimate of the burden of the proposed collection of information, including the validity of the methodology and assumptions used; (3) ways to enhance the quality, utility, and clarity of the information to be collected; and (4) ways to minimize the burden of the collection of information on respondents, including through the use of automated collection techniques,

when appropriate, and other forms of information technology.

Telephone Questionnaire Administration to Control Subjects Recruited into FDA Lyme Vaccine Safety Study, ''A Case-Control Study of HLA Type and T-Cell Reactivity to Recombinant Outer Surface Protein A and Human Leukocyte Function-Associated Antigen-1''

Section 505 of the Federal Food, Drug, and Cosmetic Act (the act) (21 U.S.C. 355), requires that important safety information relating to all human prescription drug products be made available to FDA so that it can take appropriate action to protect the public health when necessary. Section 702 of the act (21 U.S.C. 372) authorizes investigational powers to FDA for enforcement of the act.

Under section 519 of the act (U.S.C. 360i), FDA is authorized to require manufacturers to report medical device-related deaths, serious injuries, and malfunctions to FDA and to require user facilities to report device-related deaths directly to FDA and to manufacturers, and to report serious injuries to the manufacturer. Section 522 of the act (21 U.S.C. 360l) authorizes FDA to require manufacturers to conduct postmarket surveillance of medical devices. Section 705(b) of the act (21 U.S.C. 375(b)) authorizes FDA to collect and disseminate information regarding medical products or cosmetics in situations involving imminent danger to health or gross deception of the consumer. Section 903(d)(2) of the act (21 U.S.C. 393(d)(2)) authorizes the Commissioner of Food and Drugs (the Commissioner) to implement general powers (including conducting research) to carry out effectively the mission of FDA. These sections of the act enable FDA to enhance consumer protection from risks associated with medical products usage that are not foreseen or apparent during the premarket notification and review process.

FDA's regulations governing application for agency approval to market a new drug (21 CFR part 314) and regulations governing biological products (21 CFR part 600) implement these statutory provisions.

Currently FDA monitors medical product related postmarket adverse events via both the mandatory and voluntary MedWatch reporting systems using FDA forms 3500 and 3500A (OMB control number 0910–0291) and the vaccine adverse event reporting system (VAERS) using form VAERS–1. Health care providers and manufacturers are required by law (42 U.S.C. 300aa–25) to report adverse events following vaccination listed in the vaccine injury table. Reports for reactions to other vaccines are voluntary, and are received from vaccine recipients, their health care providers, and other reporters.

FDA is seeking OMB clearance to collect vital information through the use of the proposed survey questionnaire for control subjects participating in this vaccine safety study. The intended respondents are control subjects previously recruited to participate in this study, and are matched with case subjects reported to VAERS who developed arthritis following Lyme vaccine administration. Informed consent for administration of this questionnaire will have been received prior to the interview, and the interview is to be conducted at a time specified by the control subject at the time of initial recruitment into this study. Case and control subjects should have similar age, gender, and ethnic backgrounds. Specific genetic and immune factors will be compared between case and control subjects. This is a common, accepted type of epidemiological study called a case-control study. Information collected includes medical and vaccination history, family history, and possible exposures such as in the workplace that may play a part in the development of arthritis in some patients. FDA will use the information gathered from the use of this survey questionnaire to ensure appropriate matching of cases and controls in the study and to assess possible factors which may factor in the development of this adverse event. This study was approved by the FDA Research Involving Human Subjects Committee on February 15, 2002 (RIHSC #01–028B). This survey questionnaire is an abbreviated version of one used during enhanced surveillance followup of adverse events following Lyme vaccine administration reported to VAERS. The use of the vital information gathered using this survey questionnaire will aid FDA in assessing risks that may be associated with vaccine product usage that are not foreseen or apparent during the premarket notification and review process, so the agency may take appropriate public health or regulatory action including dissemination of this information as necessary and appropriate.

FDA estimates the burden of this collection of information as follows:

TABLE 1.—ESTIMATED ANNUAL REPORTING BURDEN[1]

Survey	No. of Respondents	Annual Frequency per Response	Total Annual Responses	Hours per Response	Total Hours
''A Case-Control Study of HLA Type and T-Cell Reactivity to Recombinant Outer Surface Protein A and Human Leukocyte Function-Associated Antigen-1''	225	1	225	0.5	112.5

[1]There are no capital costs or operating and maintenance costs associated with this collection of information.

FDA projects that there will be up to 75 case subjects recruited into this study with 3 control subjects recruited for each case subject, with a total maximum of 225 survey questionnaire respondents. FDA also projects a response time no greater than 0.5 hours per response. This estimate is based on previous results experienced with the instrument during enhanced surveillance followup of adverse events reported to VAERS. Respondents will only be contacted once during conduct of this study for the purposes of collection of vital information using this survey questionnaire.

Dated: June 21, 2002.

Margaret M. Dotzel,

Associate Commissioner for Policy.

[FR Doc. 02–16294 Filed 6–26–02; 8:45 am]

BILLING CODE 4160–01–S

DEPARTMENT OF HEALTH AND HUMAN SERVICES

Food and Drug Administration

[Docket No. 02F–0142]

Cyanotech Corp.; Withdrawal of Food Additive Petition

AGENCY: Food and Drug Administration, HHS.

ACTION: Notice.

SUMMARY: The Food and Drug Administration (FDA) is announcing the withdrawal, without prejudice to a future filing, of a food additive petition (FAP 2A4732) proposing that the food additive regulations be amended to provide for the safe use of *Haematococcus* algae astaxanthin as a nutrient supplement.

FOR FURTHER INFORMATION CONTACT: James C. Wallwork, Center for Food Safety and Applied Nutrition (HFS–265), Food and Drug Administration, 5100 Paint Branch Pkwy., College Park, MD 20740, 202–418–3078.

SUPPLEMENTARY INFORMATION: In a notice published in the **Federal Register** of April 11, 2002 (67 FR 17700), FDA announced that a food additive petition (FAP 2A4732) had been filed by Cyanotech Corp., c/o T. Todd Lorenz, 11034 West Ocean Air Dr., ι 252, San Diego, CA 92130 (currently 73–4460 Queen Kaahumanu Hwy., ι 102, Kailua-Kona, HI 96740). The petition proposed to amend the food additive regulations in Part 172 *Food Additives Permitted for Direct Addition to Food for Human Consumption* (21 CFR part 172) to provide for the safe use of *Haematococcus* algae astaxanthin as a nutrient supplement. Cyanotech Corp. has now withdrawn the petition without prejudice to a future filing (21 CFR 171.7(a)).

Dated: June 3, 2002.

Laura M. Tarantino,

Deputy Director, Office of Food Additive Safety, Center for Food Safety and Applied Nutrition.

[FR Doc. 02–16162 Filed 6–26–02; 8:45 am]

BILLING CODE 4160–01–S

DEPARTMENT OF HEALTH AND HUMAN SERVICES

Food and Drug Administration

[Docket No. 02N–0178]

Canned Tomatoes Deviating From Identity Standard; Temporary Permit for Market Testing

AGENCY: Food and Drug Administration, HHS.

ACTION: Notice.

SUMMARY: The Food and Drug Administration (FDA) is announcing that a temporary permit has been issued to Del Monte Corp. to market test canned tomato products that deviate from the U.S. standard of identity for canned tomatoes. The purpose of the temporary permit is to allow the applicant to measure consumer acceptance of the products, identify mass production problems, and assess commercial feasibility, in support of a petition to amend the standard of identity for canned tomatoes.

DATES: This permit is effective for 15 months, beginning on the date the food is introduced or caused to be introduced into interstate commerce, but not later than September 25, 2002.

FOR FURTHER INFORMATION CONTACT: Ritu Nalubola, Center for Food Safety and Applied Nutrition (HFS–822), Food and Drug Administration, 5100 Paint Branch Pkwy., College Park, MD 20740, 301–436–2371.

SUPPLEMENTARY INFORMATION: In accordance with 21 CFR 130.17 concerning temporary permits to facilitate market testing of foods deviating from the requirements of the standards of identity issued under section 401 of the Federal Food, Drug, and Cosmetic Act (21 U.S.C. 341), FDA is giving notice that a temporary permit has been issued to Del Monte Corp., One Market @ The Landmark, P.O. Box 193575, San Francisco, CA 94119–3575.

The permit covers limited interstate marketing tests of products identified as ''Stewed Tomatoes, Original Recipe,'' ''Chunky Tomatoes, Pasta Style,'' ''Diced Tomatoes, basil, garlic & oregano,'' ''Diced Tomatoes, garlic & onion,'' ''Diced Tomatoes, green pepper & onion,'' ''Tomato Wedges,'' ''Zesty Chunky Tomatoes, Chili Style,'' ''Stewed Tomatoes, Cajun Recipe with pepper, garlic, and Cajun spices,'' ''Stewed Tomatoes, Italian Recipe with basil, garlic & oregano,'' ''Stewed Tomatoes, Mexican Recipe with garlic, cumin, and jalapeños'' and ''Stewed Tomatoes, no salt added.'' These canned tomato products may deviate from the U.S. standard of identity for canned tomatoes (21 CFR 155.190) in two ways. First, a liquid carbohydrate sweetener, either corn syrup or high fructose corn syrup, is used as an optional ingredient in lieu of dry nutritive carbohydrate sweeteners. The liquid carbohydrate sweetener, corn syrup or high fructose corn syrup, is used in a quantity reasonably necessary to compensate for the tartness resulting from added organic acids, except that such addition of the liquid sweetener, in no case, may result in a finished canned tomato product with a tomato soluble solids content of less than 5.0 percent by weight as defined in 21 CFR 155.3(e) (which accounts for any added salt) and accounting for the soluble solids of the liquid sweetener. The feasibility of this tomato soluble solids requirement will be assessed during the temporary marketing of the test products. Second, this temporary marketing permit provides for use of the term ''chunky'' in lieu of the styles (i.e., whole, sliced, diced, and wedges) required by the standard. Except for the use of a liquid sweetener and the use of the alternative term ''chunky'' on some products, the test products meet all the requirements of the standard. Because test preferences vary by area, along with social and environmental differences, the purpose of this permit is to test the product throughout the United States.

This permit provides for the temporary marketing of a total of 5.6 million cases (5 million pounds or 2.3 million kilograms in weight) of the above-mentioned canned tomato products. The test products will be manufactured by Del Monte Corp. at 10652 Jackson Ave., Hanford, CA 93230. The products will be distributed by Del Monte Corp. in the United States. The information panel of the labels will bear nutrition labeling in accordance with 21 CFR 101.9. Each of the ingredients used in the food must be declared on the labels as required by the applicable sections of 21 CFR part 101. This permit is effective for 15 months, beginning on the date the food is introduced or caused to be introduced into interstate commerce, but not later than September 25, 2002.

Dated: June 19, 2002.

Christine Taylor,

Dierector, Office Nutritional Products, Labeling and Dietary Supplements, Center for Food Safety and Applied Nutrition.

[FR Doc. 02–16164 Filed 6–26–02; 8:45 am]

BILLING CODE 4160–01–S

DEPARTMENT OF HEALTH AND HUMAN SERVICES

Food and Drug Administration

[Docket No. 00P–1439]

Iceberg Water Deviating From Identity Standard; Extension of Temporary Permit for Market Testing

AGENCY: Food and Drug Administration, HHS.

ACTION: Notice.

SUMMARY: The Food and Drug Administration (FDA) is announcing the extension of a temporary permit issued to Iceberg Industries Corp., to market test products designated as ''Borealis Iceberg Water,'' a name not otherwise permissible under the U.S. standard of identity for bottled water. The extension will allow the permit holder to continue to collect data on consumer acceptance of products while the agency takes action on a petition to amend the

standard of identity for bottled water, which was submitted by the permit holder.

DATES: The new expiration date of the permit will be either the effective date of a final rule amending the standard of identity for bottled water that may result from the permit holder's petition or 30 days after denial of the petition, whichever the case may be.

FOR FURTHER INFORMATION CONTACT: Loretta A. Carey, Center for Food Safety and Applied Nutrition (HFS–822), Food and Drug Administration, 5100 Paint Branch Pkwy., College Park, MD 20740, 301–436–2371.

SUPPLEMENTARY INFORMATION: In accordance with § 130.17 (21 CFR 130.17), FDA issued a temporary permit to Iceberg Industries Corp., 16 Forest Rd., suite 300, St. John's, Newfoundland, Canada, A1C 2B9, to market test products identified as ''iceberg water'' a name that is not permitted under the U.S. standard of identity for bottled water in § 165.110 (21 CFR 165.110) (65 FR 54283, September 7, 2000). The agency issued the permit to facilitate market testing of products whose labeling differs from the requirements of the standard of identity for bottled water issued under section 401 of the Federal Food, Drug, and Cosmetic Act (21 U.S.C. 341). The permit covers limited interstate market testing of products that deviate from the standard for bottled water in § 165.110 in that they are identified as ''iceberg water'' rather than as ''bottled water'' or one of the other names specified in § 165.110(a)(2). The test product meets all the requirements of the standard with the exception of this deviation.

On September 28, 2001, Iceberg Industries Corp. requested that its temporary permit be extended to allow for additional time for the market testing of its products under the permit in order to gain additional information in support of its petition. The petitioner requests FDA to amend the standard of identity for bottled water to provide for a new kind of bottled water, ''iceberg water,'' and to require icebergs in a marine environment as its source.

The agency finds that it is in the interest of consumers to issue an extension of the time period for the market testing of products identified as iceberg water to gain information on consumer expectations and acceptance. FDA is inviting interested persons to participate in the market test under the conditions that apply to Iceberg Industries Corp. (e.g., the composition of the test product), except for the designated area of distribution. Any person who wishes to participate in the extended market test must notify, in writing, the Team Leader, Conventional Foods Team, Division of Standards and Labeling Regulations, Office of Nutritional Products, Labeling and Dietary Supplements, Center for Food Safety and Applied Nutrition (HFS–822), Food and Drug Administration, 5100 Paint Branch Pkwy., College Park, MD 20740. The notification must include a description of the test products to be distributed, justification for the amount requested, the area of distribution, and the labeling that will be used for the test product (i.e., a draft label for each size of container and each brand of product to be market tested). The information panel of the label must bear nutrition labeling in accordance with 21 CFR 101.9. Each of the ingredients used in the food must be declared on the label as required by the applicable sections of 21 CFR part 101.

Therefore, under the provisions of § 130.17(i), FDA is extending the temporary permit granted to Iceberg Industries Corp., 16 Forest Rd., suite 300, St. John's, Newfoundland, Canada, A1C 2B9 to provide for continued market testing on an annual basis of 150,000 cases of the 24 x 350 milliliters (mL), 150,000 cases of the 12 x 1 liters (L), and another 100,000 cases of the 24 x 500 mL giving 400,000 cases in total. The total fluid weight of the test product will be 1,124,024 gallons or 4,260,000 L. The test products will bear the name ''Borealis Iceberg Water.'' FDA is extending the expiration date of the permit so that the permit expires either on the effective date of a final rule amending the standard of identity for bottled water that may result from the permit holder's petition or 30 days after denial of the petition, whichever the case may be. All other conditions and terms of this permit remain the same.

Dated: June 18, 2002.

Christine Taylor,

Director, Office of Nutritional Products, Labeling and Dietary Supplements, Center for Food Safety and Applied Nutrition.

[FR Doc. 02–16291 Filed 6–26–02; 8:45 am]

BILLING CODE 4160–01–S

DEPARTMENT OF HEALTH AND HUMAN SERVICES

Food and Drug Administration

Assuring Radiation Protection; Availability of a Cooperative Agreement; Request for Applications

AGENCY: Food and Drug Administration, HHS.

ACTION: Notice.

SUMMARY: The Food and Drug Administration (FDA), Center for Devices and Radiological Health (CDRH), is announcing the availability of approximately $500,000 in total fiscal year (FY) 2002 funds. These funds will be used to support one cooperative agreement for the coordination of Federal and State actions to assure radiation protection of the American public.

DATES: Submit applications by July 29, 2002.

ADDRESSES: Completed applications should be submitted to: Maura C. Stephanos, Grants Management Specialist, Grants Management Staff (HFS–520), Division of Contracts and Procurement Management, Food and Drug Administration, 5600 Fishers Lane, rm. 2129, Rockville, MD 20857, 301–827–7183, FAX 301–827–7101, e-mail: *mstepha1@oc.fda.gov*. Application forms are available either from Maura C. Stephanos or on the Internet at *http://grants.nih.gov/grants/funding/pjs398/phs398.html/*. Note: Do not send applications to the Center for Scientific Research (CSR), National Institutes of Health (NIH).

FOR FURTHER INFORMATION CONTACT:

Regarding the administrative and financial management aspects of this notice, contact Maura C. Stephanos (*see* **ADDRESSES**).

Regarding the programmatic aspects of this notice, contact Penny R. Boyce, Center for Devices and Radiological Health (HFZ–240), Food and Drug Administration, 1350 Piccard Dr., Rockville, MD 20850, 301–594–3650, FAX 301–594–3306; e-mail: *pzb@cdrh.fda.gov*.

SUPPLEMENTARY INFORMATION: FDA is announcing its intention to accept and consider applications for a cooperative agreement in support of coordination of Federal and State action to protect the American public from exposure to radiation. The cooperative agreement covered by this notice will be in furtherance of FDA's responsibilities under section 532 of the Federal Food, Drug, and Cosmetic Act (21 U.S.C. 360ii) to establish and carry out a comprehensive radiation control program. FDA's authority to enter into grants and cooperative agreements is set out in section 301 of the Public Health Service Act (42 U.S.C. 241). FDA's research program is described in the Catalog of Federal Domestic Assistance No. 93.103. Before entering into cooperative agreements, FDA carefully considers the benefits such agreements will provide to the public.

The Public Health Service (PHS) strongly encourages all award recipients to provide a smoke-free workplace and to discourage the use of all tobacco products. This is consistent with the PHS mission to protect and advance the physical and mental health of the American people.

FDA is committed to achieving the health promotion and disease prevention objectives of ''Healthy People 2010,'' a national effort designed to reduce morbidity and mortality and to improve quality of life. Applicants may obtain a paper copy of the ''Healthy People 2010'' objectives, vols. I and II, for $70 ($87.50 foreign) S/N 017–000–00550–9 by writing to the Superintendent of Documents, P.O. Box 371954, Pittsburgh, PA 15250–7954. Telephone orders can be placed to 202–512–2250. The document is also available in CD–ROM format, S/N 017–001–00549–5 for $19 ($23.50 foreign) as well as on the Internet at http://health.gov/healthypeople. Internet viewers should proceed to ''Publications.''

I. Background

Since 1968, FDA has taken the lead in working with the Nuclear Regulatory Commission (NRC) and its predecessor organizations, the Environmental Protection Agency (EPA), the Federal Emergency Management Agency (FEMA), and the Department of Energy (DOE), to provide financial support for a forum established to foster the exchange of ideas and information among the States and the Federal Government concerning radiation control. This forum has made it possible for State and Federal agencies to work together to study existing and potential radiological health problems of mutual interest and to apply their increasingly limited resources with maximum efficiency in seeking ways to address these problems.

Three major mechanisms traditionally have been used to achieve this coordination between State and Federal agencies:

1. When certain radiation control issues warrant specific consideration, committees and other working groups comprised of representatives of State radiation control programs and liaison members from the concerned Federal agencies have been formed to evaluate these issues and recommend ways to address them. The recommendations of the committees are evaluated by a central management board and final recommended actions are relayed to the appropriate Federal and State agencies.

2. Annual meetings of Federal and State officials are convened to present and discuss the results of the studies conducted. The annual meetings also include workshops to more carefully define new problems and areas of mutual concern in radiation control, and clinics to demonstrate mutually beneficial radiological health techniques, procedures, and systems. The annual meeting lasts approximately 4 days, with an average attendance of 350 participants.

3. Additional educational activities have been provided for the benefit of members of State programs having radiation control responsibilities and the general public to acquaint them with radiation exposure problems and the proposed solutions. Methods used have included videotapes, publications, and training courses.

II. Goals and Objectives

The objective of this cooperative agreement will be to coordinate Federal and State activities to achieve effective solutions to present and future radiation control problems. The recipient of this cooperative agreement award will be expected to obtain the States' cooperation and participation on committees and working groups established to deal with individual problems. The recipient will also plan and facilitate an annual meeting, and develop and offer educational activities to demonstrate mutually beneficial techniques, procedures, and systems relevant to the mission of assuring radiation protection.

The recipient will establish committees to address, evaluate, and offer solutions for a wide range of radiation health and protection issues. Examples of relevant areas already identified to be of interest include, but are not limited to: (1) The application of x-rays to the healing arts; (2) the application of medical/nonmedical ionizing radiation; (3) the development of a system for managing the disposition of unwanted radioactive materials (orphan sources); and (4) the control and mitigation of radiation exposure from all sources. These areas are explained more fully in the following paragraphs.

A. Areas of Interest

1. Application of X-Rays to the Healing Arts

The recipient's activities related to x-rays in the healing arts should include issues related to general diagnostic radiology and mammography.

a. General Diagnostic Radiology

Issues related to radiography, fluoroscopy, and computed tomography should be considered in terms of practice guidelines, quality assurance procedures, and patient exposure evaluation. In the area of patient exposure, the recipient will be responsible for conducting an annual survey of a representative sample of medical x-ray facilities conducting one specific diagnostic x-ray procedure (from a set of predefined procedures that will be the subject of the survey over time).

b. Mammography

The recipient will be responsible for providing advice and recommendations to FDA on issues related to the implementation of the Mammography Quality Standards Act (MQSA). Consideration should be given to issues related to: The training of those conducting MQSA inspections; the results of the ongoing FDA Inspection Demonstration Program under MQSA; and informing mammography facilities about the results of MQSA inspections nationwide and steps that they can take to improve their performance under MQSA.

2. Application of Medical/Nonmedical Ionizing Radiation

The recipient will also address issues in the nonmedical applications of ionizing radiation as well as the medical and nonmedical applications of nonionizing radiation, particularly ultraviolet radiation.

3. Managing the Disposition of Unwanted Radioactive Materials (Orphan Sources)

The recipient will develop, implement, and manage a national program to identify, handle, and dispose of unwanted radioactive materials (orphan sources). The responsibilities for this task include: (1) Clarifying the State and Federal jurisdictional and regulatory responsibilities; (2) establishing agreements with interested NRC Agreement and non-Agreement States to identify and dispose of discrete orphan sources; (3) establishing cost guidelines for disposal of discrete orphan sources; and (4) reimbursing States for recovery, recycling, arrangements for reuse, and disposal costs of these sources. Additionally, the recipient will study, evaluate, and develop actions on issues related to radioactive waste disposal, radioactive contamination, contaminated sites, and international radiation protection as recommended by working groups and subcommittees established by the recipient.

4. Control and Mitigation of Radiation Exposure

The recipient will be responsible for developing criteria relevant to the control and mitigation of radiation exposure from all sources. Specific areas to be addressed include: Responding to radiation accidents or incidents; evaluating the adequacy of State radiation control programs, controlling residual radioactivity levels from decontamination and decommissioning of nuclear facilities, determining the propriety of delegating implementation authority for Federal standards for control of radionuclides as hazardous air pollutants, and implementing the Indoor Radon Abatement Act. The recipient will also be required to review and provide comments on issues related to radiological emergency preparedness.

B. Suggested State Regulations for the Control of Radiation (SSRCR)

Updating and maintaining the SSRCR will be an integral aspect of this cooperative agreement. These regulations will be disseminated to the States for the purpose of promoting uniformity between the States. The regulations will address issues relevant to controlling radiation exposure from all sources such as low-level waste, radioactive contamination, radioactive materials, radon, and x-rays in the healing arts.

C. Committee Oversight and Management

The recipient should anticipate oversight and management responsibilities for approximately 45 committees. In some instances, the recipient will be required to provide representatives to certain Federal radiation committees, such as the Federal Radiological Preparedness Coordinating Committee (FRPCC) and its subcommittees (overseen by FEMA).

Federal representatives will be appointed to these committees and other working groups dealing with problems related to the agency mission. These representatives will participate in the discussions leading to any recommendations developed by the committees and working groups. They will be primarily responsible for assuring that such recommendations are in accordance with Federal policy and regulations. The Federal representatives will also act as investigators, collaborators, or resource personnel, as appropriate.

D. Special Projects

The recipient will also occasionally implement special projects as determined by the participating State and Federal agencies. Areas for which groups may be needed include, but are not limited to, radioactive materials and radiation exposure problems in the environment, in the healing arts, in industry, and in, or related to, consumer products.

E. Annual Meeting

The recipient will be required to plan, conduct, and handle all administrative functions for an annual meeting. This meeting will offer an opportunity for member States and other interested parties to convene to exchange concerns and ideas for problem solving. The recipient should consult with stakeholders to determine priority agenda items and topics of interest. General sessions of this annual meeting should include workshops to define new problems, and discussions and lectures on mutually beneficial radiological health techniques, procedures, and systems. Identified areas of mutual concern in radiation control should be considered for assignment to a task force or committee comprised of experts. The recipient will be expected to publish the meeting proceedings in hardcopy and on the recipient's web site for limited dissemination to member States and relevant Federal personnel.

In conjunction with the annual meeting, the recipient will be required to hold training sessions. These sessions should demonstrate mutually beneficial techniques, procedures, and systems that have been developed by the sponsoring agencies or the recipient. The recipient may also be requested by FDA to provide instructors for Federal training courses with a radiological component held outside of the annual meeting.

Additionally, the recipient of this cooperative agreement award will be expected to provide the leadership to refresh and update previously-developed consensus guidance documents and SSRCR to provide States with up-to-date assistance in effective management of radiological hazards.

A Web site will be maintained by the recipient for the benefit of the States and other interested parties; the FDA Project Officer and other designated Federal personnel will be given complete and full access to all information posted on the site that is relevant to the work supported by FDA and other supporting agencies. The information and materials posted on the site should be reviewed and updated at regular intervals. Expertise in Web site maintenance and security is required to fulfill this task.

III. Reporting Requirements

An annual program progress report, a report detailing progress made under the National Orphan Source Program, and an annual Financial Status Report (FSR) (SF–269) are required. An original and two copies of these reports shall be submitted to FDA's Grants Management Officer within 90 days of the budget expiration date of the cooperative agreement. Failure to file these reports in a timely fashion may be grounds to withhold continued support of the cooperative agreement and/or suspend or terminate the agreement. The recipient will be advised of the suggested format for the annual Program Progress Report and the National Orphan Source Program report at the time an award is made.

A final program progress report and FSR will be due within 90 days after the expiration of the project period as noted on the Notice of Grant Award.

Reports generated by the task forces, committees, and workshops should include recommendations for the resolution of problem areas as well as cost/benefit evaluations. These reports will be reviewed by the recipient's governing body before final dissemination to Federal and/or State officials. Any publications supported by Federal funds must include a statement acknowledging Federal support, as well as a disclaimer that the information presented is not necessarily the view of the supporting agency.

Program monitoring of the recipient will be conducted by FDA on an ongoing basis through telephone conversations between the FDA Project Officer and/or the FDA Grants Management Specialist and the principal investigator. Periodic site visits with appropriate officials of the recipient organization may also be conducted. The results of these communications and visits will be recorded in the official cooperative agreement file and may be available to the recipient upon request consistent with FDA disclosure regulations.

The recipient will also provide a periodic newsletter that will be made available to member States and relevant Federal personnel on the Web site. The newsletter should include updates on projects and programs relevant to the mission of, and supported by, the contributing Federal agencies. The FDA Project Officer and liaisons from other agencies supporting this Agreement will be provided access to secured information on the Web site via passwords.

The recipient will maintain a database of personnel responsible for radiological

health programs in the member States and Federal agencies. This database will be updated annually and published for distribution by the recipient. Two paper copies of the directory and a noncopyright electronic version will be provided to all contributing Federal agencies.

IV. Mechanism of Support

A. Award Instrument

Support for this program will be in the form of a cooperative agreement award. This award will be subject to all policies and requirements that govern the research grant programs of PHS, including the provisions of 42 CFR part 52 and 45 CFR parts 74 and 92. The regulations issued under Executive Order 12372 do not apply to this program. The National Institutes of Health's (NIH) modular grant program does not apply to this FDA program.

B. Eligibility

This cooperative agreement is available to any domestic private or public nonprofit organization (including State and local units of government) and to any domestic for-profit organization. For-profit organizations must exclude fees or profit from their requested support. Organizations described in section 501(c)(4) of the Internal Revenue Code of 1968 that engage in lobbying are not eligible to receive awards.

C. Length of Support

The length of support will be for up to 5 years. Funding beyond the first year will be noncompetitive and will depend on: (1) Acceptable programmatic performance during the preceding year, and (2) the availability of Federal fiscal year funds.

D. Funding Plan

Federal funds are currently available from FDA for this program. However, an award is subject to the condition that, in addition to FDA funds, augmenting funds are transferred to FDA from other Federal agencies to fully support this program. As the lead Federal agency, FDA intends to collect funds from all other contributing Federal agencies through Interagency Agreements (IAGs) and fund one award for up to $500,000 in total costs (including both direct and indirect costs). Support of this cooperative agreement may be for up to 5 years in duration with the total budget amount not to exceed $500,000 (direct plus indirect costs) per year or a total of $2,500,000 for a 5-year award. Funds obligated through IAGs will be immediately transferred to FDA for use in support of this agreement.

Any application received that exceeds $500,000 (direct plus indirect costs) per year will not be considered responsive and will be returned to the applicant without being reviewed. After the first year, additional years of noncompetitive support are predicated upon acceptable performance during the preceding year and the availability of Federal funds.

V. Delineation of Substantive Involvement

Substantive involvement by the awarding agency is inherent in the cooperative agreement award. Accordingly, FDA will have a substantive involvement in the programmatic activities of the project funded by the cooperative agreement.

Substantive involvement includes, but is not limited to, the following:

(1) Priorities on issues to be addressed will be jointly agreed to by the recipient and FDA in coordination with the Federal liaisons of agencies providing funding to FDA under an Interagency Agreement. The FDA Project Officer will be invited to all planning meetings of the central management board or committee of the recipient of the award. These meetings must be held on normal business days during normal business hours. The Project Officer will participate in the making of decisions with respect to the annual meeting (including the topics to be discussed and meeting site selection), committee organization and mission, and other activities under this award.

(2) Senior Federal liaisons from all contributing Federal agencies will also be named and will regularly attend the planning meetings of the central management board or committee, and will communicate with the other liaisons from their agency who are members of the task forces and related committees. These Senior Federal Liaisons will also regularly attend the annual meeting. Through the FDA Project Officer, the recipient will communicate with agencies on major policy and regulatory issues relevant to the work of FDA and the supporting agencies.

(3) FDA will collaborate with the recipient on data analysis, interpretation of findings, and, where appropriate, coauthor publications.

VI. Review Procedures and Criteria

A. Review Procedures

FDA's grants management and program staff will review all applications submitted in response to this notice for responsiveness. To be responsive, an application must: (1) Be received by the specified due date; (2) be submitted in accordance with sections IV.B. ''Eligibility,'' VII. ''Submission Requirements,'' and VIII.A. ''Submission Instructions'' of this notice; (3) not exceed the recommended funding amount stated in section IV.D of this document; (4) address the specific requirements of the project stated in section II. ''Goals and Objectives'' of this document; and (5) bear the original signatures of both the Principal Investigator and the Institution's/Organization's Authorized Official. If applications are found to be nonresponsive, they will be returned to the applicants without further consideration.

Responsive applications will be reviewed and evaluated for scientific and technical merit by an ad hoc panel of experts. This review will be competitive. The final funding decision will be made by the Commissioner of Food and Drugs.

B. Review Criteria

The application will be reviewed and evaluated according to the following criteria that are of equal value:

1. The application clearly demonstrates an understanding of the purpose and objectives of the cooperative agreement regarding the coordination of Federal and State activities to assure radiation protection of the American public.

2. The application clearly describes the steps and a proposed schedule for planning, implementing, and accomplishing the activities to be carried out under the cooperative agreement. The application presents a clear plan and schedule of steps to accomplish the goals of the cooperative agreement.

3. The application establishes the applicant's ability to perform the responsibilities under the cooperative agreement, including the availability of appropriate staff and the ability to carry out the stated goals and objectives of the cooperative agreement within the established funding constraints stated in this notice.

4. The application specifies the manner in which interactions with FDA will be maintained throughout the lifetime of the project.

5. The application specifies how the recipient will monitor the progress of the work required under the cooperative agreement, and how the progress will be reported to FDA.

6. The application shall include a detailed and fully-justified budget that includes anticipated costs for personnel, travel, equipment, and supplies.

VII. Submission Requirements

The original and two copies of the completed Grant Application Form PHS 398 (Rev. 4/98 or Rev. 5/01) or the original and two copies of PHS 5161–1 (Rev. 7/00) for State and local governments, with copies of the appendices for each of the copies, should be delivered to Maura Stephanos (see **ADDRESSES**). State and local governments may choose to use the PHS 398 application form in lieu of PHS 5161–1. The application receipt date is July 29, 2002. No supplemental or addendum material will be accepted after the receipt date. The outside of the mailing package and item 2 of the application face page should be labeled: ''Response to RFA FDA CDRH–02–1.''

VIII. Method of Application

A. Submission Instructions

Applications will be accepted during normal business hours, 8 a.m. to 4:30 p.m., Monday through Friday, on or before the established receipt date. Applications will be considered received on time if sent or mailed on or before the receipt date as evidenced by a legible U.S. Postal Service dated postmark or a legible dated receipt from a commercial carrier, unless they arrive too late for orderly processing. Private metered postmarks shall not be acceptable as proof of timely mailing. Applications not received on time will not be considered for review and will be returned to the applicant. (Applicants should note that the U.S. Postal Service does not uniformly provide dated postmarks. Before relying on this method, applicants should check with their local post office.) Do not send applications to the Center for Scientific Research (CSR), NIH. Any application that is sent to NIH, and is then forwarded to FDA and not received in time for orderly processing will be deemed not responsive and returned to the applicant. Applications must be submitted via mail or hand delivered as stated above. FDA is unable to receive applications electronically. Applicants are advised that FDA does not adhere to the page limitations or the type size and line spacing requirements imposed by the NIH on its applications.

B. Format for Application

Submission of the application must be on Grant Application Form PHS 398 (Rev. 4/98 or Rev. 5/01) or on either form PHS 398 or PHS 5161–1 (Rev. 7/00) for State and local government applicants. All ''General Instructions'' and ''Specific Instructions'' in the application kit should be followed with the exception of the receipt dates and the mailing label address.

The face page of the application should reflect the request for applications number, RFA–FDA–CDRH–02–1. Data and information included in the application, if identified by the applicant as trade secret or confidential commercial information. Will be given confidential treatment to the extent permitted by the Freedom of Information Act (5 U.S.C. 552(b)(4)) and FDA's implementing regulations (21 CFR 20.61).

Information collection requirements requested on Form PHS 398 and the instructions have been submitted by PHS to the Office of Management and Budget (OMB) and were approved and assigned OMB control number 0925–0001. The requirements requested on Form PHS 5161–1 were approved and assigned OMB control number 0348–0043.

Dated: June 21, 2002.

Margaret M. Dotzel,

Associate Commissioner for Policy.

[FR Doc. 02–16293 Filed 6–26–02; 8:45 am]

BILLING CODE 4160–01–S

DEPARTMENT OF HEALTH AND HUMAN SERVICES

Food And Drug Administration

[Docket No. 02D–0260]

Draft Guidance for Industry on Prescription Drug Marketing Act Regulations for Donation of Prescription Drug Samples to Free Clinics; Availability

AGENCY: Food and Drug Administration, HHS.

ACTION: Notice.

SUMMARY: The Food and Drug Administration (FDA) is announcing the availability of a draft guidance for industry entitled ''Prescription Drug Marketing Act Regulations for Donation of Prescription Drug Samples to Free Clinics.'' The draft guidance provides information for free clinics that receive donated prescription drug samples from licensed practitioners or other charitable institutions. The draft guidance discusses concerns that have been expressed by certain individuals regarding regulatory requirements of FDA's regulations for drug sample donations. The draft guidance announces that FDA, in the exercise of its enforcement discretion, does not intend to object if a free clinic fails to comply with the requirements in the regulations, while the agency studies the potential impact of its regulations on free clinics.

DATES: Submit written or electronic comments on the draft guidance by September 25, 2002. General comments on agency guidance documents are welcome at any time.

ADDRESSES: Submit written requests for single copies of the draft guidance to Division of Drug Information (HFD–240), Center for Drug Evaluation and Research, Food and Drug Administration, 5600 Fishers Lane, Rockville, MD 20857. Send one self-addressed adhesive label to assist that office in processing your requests. Submit written comments on the draft guidance to the Dockets Management Branch (HFD–305), Food and Drug Administration, 5630 Fishers Lane, rm. 1061, Rockville, MD 20857. Submit electronic comments to *http://www.fda.gov/dockets/ecomments*. See the **SUPPLEMENTARY INFORMATION** section for electronic access to the draft guidance document.

FOR FURTHER INFORMATION CONTACT: Lee D. Korb, Office of Regulatory Policy (HFD–7), Center for Drug Evaluation and Research, 5600 Fishers Lane, Rockville, MD 20857, 301–594–2041.

SUPPLEMENTARY INFORMATION:

I. Background

FDA is announcing the availability of a draft guidance for industry entitled ''Prescription Drug Marketing Act Regulations for Donation of Prescription Drug Samples to Free Clinics.'' Section 203.39 (21 CFR 203.39) of the agency's regulations sets forth requirements for donation of prescription drug samples to charitable institutions. ''Charitable institution or charitable organization'' is defined in § 203.3(f) (21 CFR 203.3(f)) as ''a nonprofit hospital, health care entity, organization, institution, foundation, association, or corporation that has been granted an exemption under section 501(c)(3) of the Internal Revenue Code of 1954, as amended.'' Under § 203.39, a charitable institution may receive drug samples donated by a licensed practitioner or another charitable institution for dispensing to its patients, or may donate a drug sample to another charitable institution for dispensing to its patients, provided certain requirements are met. These requirements include, among other things, that a drug sample donated to a charitable institution must be inspected by a licensed practitioner or registered pharmacist, and that drug sample receipt and distribution records be maintained by the institution and retained for a minimum of 3 years.

The draft guidance announces that FDA, in the exercise of its enforcement discretion, does not intend to object if a free clinic fails to comply with the requirements in § 203.39 while the agency studies the potential impact of this regulation on the ability of free clinics to receive and distribute prescription drug samples. For the purposes of the draft guidance, a ''free clinic'' is a charitable institution or organization under § 203.3(f) that actually provides health care services and relies in whole or part on drug donations and volunteer help to achieve its goals. Thus, charitable institutions that receive donated drug samples, but do not provide health care services, or that provide health care services, but do not rely at least in part on drug donations and volunteer help to provide those services, would not be considered free clinics and are expected to comply with § 203.39.

This draft guidance is being issued consistent with FDA's good guidance practices regulation (21 CFR 10.115). The draft guidance, when finalized, will represent the agency's current thinking on enforcement of Prescription Drug Marketing Act Regulations for Donation of Prescription Drug Samples to Free Clinics. It does not create or confer any rights for or on any person and does not operate to bind FDA or the public. An alternative approach may be used if such approach satisfies the requirements of the applicable statutes and regulations.

II. Comments

Interested persons may submit to the Dockets Management Branch (see **ADDRESSES**) written or electronic comments on the draft guidance by September 25, 2002. Two copies of any comments are to be submitted, except that individuals may submit one copy. Comments are to be identified with the docket number found in brackets in the heading of this document. The draft guidance and received comments may be seen in the Dockets Management Branch between 9 a.m. and 4 p.m., Monday through Friday.

III. Electronic Access

Persons with access to the Internet may obtain the document at either *http://www.fda.gov/cder/guidance.index.htm* or *http://www.fda.gov/ohrms/dockets/default.htm*.

Dated: June 17, 2002.

Margaret M. Dotzel,

Associate Commissioner for Policy.

[FR Doc. 02–16160 Filed 6–26–02; 8:45 am]

BILLING CODE 4160–01–S

DEPARTMENT OF HEALTH AND HUMAN SERVICES

Food and Drug Administration

[Docket No. 01D–0475]

Guidance for Industry on Providing Regulatory Submissions in Electronic Format—ANDAs; Availability

AGENCY: Food and Drug Administration, HHS.

ACTION: Notice.

SUMMARY: The Food and Drug Administration (FDA) is announcing the availability of a guidance for industry entitled ''Providing Regulatory Submissions in Electronic Format—ANDAs.'' This guidance provides information for applicants on how to submit abbreviated new drug applications (ANDAs) in electronic format.

DATES: Submit written or electronic comments on agency guidances at any time.

ADDRESSES: Submit written requests for single copies of this guidance to the Division of Drug Information (HFD–240), Center for Drug Evaluation and Research, Food and Drug Administration, 5600 Fishers Lane, Rockville, MD 20857. Send one self-addressed adhesive label to assist that office in processing your requests. Submit written comments on the guidance to the Dockets Management Branch (HFA–305), Food and Drug Administration, 5630 Fishers Lane, rm. 1061, Rockville, MD 20857. Submit electronic comments to *http://www.fda.gov/dockets/ecomments*. See the **SUPPLEMENTARY INFORMATION** section for electronic access to the guidance document.

FOR FURTHER INFORMATION CONTACT: Ruth A. Warzala, Center for Drug Evaluation and Research (HFD–600), Food and Drug Administration, 7500 Standish Pl., Rockville, MD 20855, 301–827–5845, e-mail: *ESUB_OGD@CDER.fda.gov*.

SUPPLEMENTARY INFORMATION:

I. Background

FDA is announcing the availability of a guidance for industry entitled ''Providing Regulatory Submissions in Electronic Format—ANDAs.'' Traditionally, FDA has required that regulatory submissions, such as ANDAs and new drug applications, be submitted as paper documents. In the **Federal Register** of March 20, 1997 (62 FR 13430), FDA published the electronic records and electronic signatures regulation, which provided for the voluntary submission of parts or all of an application, as defined in the relevant regulations, in electronic format without an accompanying paper copy (21 CFR part 11). The agency also established public Docket No. 92S–0251 to provide a list of the agency units that are prepared to receive electronic submissions and the specific types of records and submissions that can be accepted in electronic format (62 FR 13430 at 13467). In the Prescription Drug User Fee Act as amended by the Food and Drug Administration Modernization Act of 1997 (Public Law 105–115), the agency stated its plans to develop and update its information management capabilities to allow electronic submissions by 2002. In the **Federal Register** of January 28, 1999, the agency announced the availability of two guidances for industry entitled ''Providing Regulatory Submissions in Electronic Format—NDAs'' (64 FR 4432) and ''Providing Regulatory Submissions in Electronic Format—General Considerations'' (64 FR 4433). These guidances were the first two of a series of guidances for industry on making regulatory submissions in electronic format. This guidance should be used in conjunction with ''Providing Regulatory Submissions in Electronic Format—NDAs'' and ''Providing Regulatory Submissions in Electronic Format—General Considerations.''

The Center for Drug Evaluation and Research (CDER) has encouraged the electronic submission of some types of data on a voluntary basis since 1997. However, these electronic submissions could not previously be archived and could only be made in addition to a complete paper submission. In the **Federal Register** of November 16, 2001 (66 FR 57721), CDER announced the availability of a draft guidance entitled ''Providing Regulatory Submissions in Electronic Format—ANDAs.'' This guidance provided new information on submitting a complete archival copy of the ANDA in electronic format. The comment period closed on January 15, 2002, and the agency considered the received comments as it finalized this guidance. As in the past, applicants planning to make submissions in electronic format should consult public Docket No. 92S–0251 to determine which agency units are prepared to receive electronic submissions and the specific types of documents that can be submitted in electronic format.

This guidance is being issued consistent with FDA's good guidance practices (GGPs) regulation (21 CFR 10.115). The guidance represents the agency's current thinking on providing

regulatory submissions in electronic format for ANDAs. It does not create or confer any rights for or on any person and does not operate to bind FDA or the public. An alternative approach may be used if such approach satisfies the requirements of the applicable statutes or regulations.

II. Comments

Interested persons may, at any time, submit written or electronic comments on the guidance to the Dockets Management Branch (see **ADDRESSES**). Two copies of any comments are to be submitted, except that individuals may submit one copy. Comments are to be identified with the docket number found in brackets in the heading of this document. The guidance and received comments are available for public examination in the Dockets Management Branch between 9 a.m. and 4 p.m., Monday through Friday.

III. Electronic Access

Persons with access to the Internet may obtain the document at either *http://www.fda.gov/cder/guidance/index.htm* or *http://www.fda.gov/ohrms/dockets/default.htm*.

Dated: June 11, 2002.

Margaret M. Dotzel,

Associate Commissioner for Policy.

[FR Doc. 02–16163 Filed 6–26–02; 8:45 am]

BILLING CODE 4160–01–S

DEPARTMENT OF HEALTH AND HUMAN SERVICES

Food and Drug Administration

[Docket No. 00D–1532]

International Cooperation on Harmonisation of Technical Requirements for Registration of Veterinary Medicinal Products (VICH); Final Guidances for Industry on ''Effectiveness of Anthelmintics: Specific Recommendations for Equine'' (VICH GL15), ''Effectiveness of Anthelmintics: Specific Recommendations for Porcine'' (VICH GL16), and ''Effectiveness of Anthelmintics: Specific Recommendations for Canine'' (VICH GL19); Availability

AGENCY: Food and Drug Administration, HHS.

ACTION: Notice.

SUMMARY: The Food and Drug Administration (FDA) is announcing the availability of three final guidances for industry (Nos. 109, 110, and 111 respectively) entitled ''Effectiveness of Anthelmintics: Specific Recommendations for Equine'' (VICH GL15), ''Effectiveness of Anthelmintics: Specific Recommendations for Porcine'' (VICH GL16), and ''Effectiveness of Anthelmintics: Specific Recommendations for Canine'' (VICH GL19). These related guidance documents have been developed by the International Cooperation on Harmonisation of Technical Requirements for Registration of Veterinary Medicinal Products (VICH). They are intended to standardize and simplify methods used in the evaluation of new anthelmintics submitted for approval to the European Union, Japan, and the United States.

DATES: Submit written or electronic comments on the final guidance documents at any time.

ADDRESSES: Submit written requests for single copies of the final guidance documents to the Communications Staff (HFV–12), Center for Veterinary Medicine, Food and Drug Administration, 7500 Standish Pl., Rockville, MD 20855. Send one self-addressed adhesive label to assist that office in processing your requests. *See* the **SUPPLEMENTARY INFORMATION** section for electronic access to the final guidance document.

Submit written comments on the final guidance documents to the Dockets Management Branch (HFA–305), Food and Drug Administration, 5630 Fishers Lane, rm. 1061, Rockville, MD 20852. Submit electronic comments to http://www.fda.gov/dockets/ecomments. Comments should be identified with the full title of the final guidance and the docket number found in brackets in the heading of this document.

FOR FURTHER INFORMATION CONTACT: Thomas Letonja, Center for Veterinary Medicine (HFV–135), Food and Drug Administration, 7500 Standish Pl., Rockville, MD 20855, 301–827–7576, e-mail: *tletonja@cvm.fda.gov*.

SUPPLEMENTARY INFORMATION:

I. Background

In recent years, many important initiatives have been undertaken by regulatory authorities and industry associations to promote the international harmonization of regulatory requirements. FDA has participated in efforts to enhance harmonization and has expressed its commitment to seek scientifically based harmonized technical procedures for the development of pharmaceutical products. One of the goals of harmonization is to identify and then reduce the differences in technical requirements for drug development among regulatory agencies in different countries.

FDA has actively participated in the International Conference on Harmonisation (ICH) of Technical Requirements for Registration of Pharmaceuticals for Human Use for several years to develop harmonized technical requirements for the approval of human pharmaceutical and biological products among the European Union, Japan, and the United States. The VICH is a parallel initiative for veterinary medicinal products. The VICH is concerned with developing harmonized technical recommendations for the approval of veterinary medicinal products in the European Union, Japan, and the United States, and includes input from both regulatory and industry representatives.

The VICH Steering Committee is composed of member representatives from the European Commission; European Medicines Evaluation Agency; European Federation of Animal Health; Committee on Veterinary Medicinal Products; the U.S. FDA; the U.S. Department of Agriculture; the Animal Health Institute; the Japanese Veterinary Pharmaceutical Association; the Japanese Association of Veterinary Biologics; and the Japanese Ministry of Agriculture, Forestry, and Fisheries.

Two observers are eligible to participate in the VICH Steering Committee: One representative from the Government of Australia/New Zealand and one representative from the industry in Australia/New Zealand. The VICH Secretariat, which coordinates the preparation of documentation, is provided by the Confédération Mondiale de L'Industrie de la Santé Animale (COMISA). A COMISA representative also participates in the VICH Steering Committee meetings.

II. Final Guidance on Effectiveness of Anthelmintics

In the **Federal Register** on October 19, 2000 (65 FR 62723), FDA published the notice of availability of these VICH draft guidances, giving interested persons until December 18, 2000, to submit comments. FDA received no comments. The final guidance was submitted to the VICH Steering Committee. At a meeting held on June 28, 2001, the VICH Steering Committee endorsed the three final guidances for industry, VICH GL15, VICH GL16, and VICH GL19.

The three final guidances VICH GL15, VICH GL16, and VICH GL19 should be read in conjunction with the ''Effectiveness of Anthelmintics: General Recommendations (EAGR)'' announced in the **Federal Register** on April 6, 2001 (66 FR 18257). The final

guidances for equine, porcine, and canine are part of the EAGR, and the aim of these three separate final guidances is to: (1) Be more specific for certain issues not discussed in the general guidance, (2) highlight differences with the EAGR on effectiveness data recommendations, and (3) give explanations for disparities between the EAGR and these documents.

These final level 1 guidance documents, developed under the VICH process, are consistent with FDA's good guidance practices regulation (21 CFR 10.115). These documents do not create or confer any rights for or on any person and will not operate to bind FDA or the public. An alternative method may be used as long as it satisfies the requirements of applicable statutes and regulations. (Information collected is covered under OMB control number 0910–0032.)

III. Comments

As with all of FDA's guidances, the public is encouraged to submit written or electronic comments with new data or other new information pertinent to these guidances. FDA will periodically review the comments in the docket and, where appropriate, will amend the guidances. The agency will notify the public of any such amendments through a notice in the **Federal Register**.

Interested persons may submit to the Dockets Management Branch (see **ADDRESSES**) written or electronic comments regarding these guidance documents at any time. Two copies of any comments are to be submitted, except that individuals may submit one copy. Comments are to be identified with the docket number found in brackets in the heading of this document. A copy of the final guidance documents and received comments are available for public examination in the Dockets Management Branch between 9 a.m. and 4 p.m., Monday through Friday.

IV. Electronic Access

Copies of the final guidance documents entitled ''Effectiveness of Anthelmintics: Specific Recommendations for Equine'' (VICH GL15), ''Effectiveness of Anthelmintics: Specific Recommendations for Porcine'' (VICH GL16), and ''Effectiveness of Anthelmintics: Specific Recommendations for Canine'' (VICH GL19) may be obtained on the Internet at http://www.fda.gov/cvm.

Dated: June 17, 2002.

Margaret M. Dotzel,

Associate Commissioner for Policy.

[FR Doc. 02–16292 Filed 6–26–02; 8:45 am]

BILLING CODE 4160–01–S

DEPARTMENT OF HEALTH AND HUMAN SERVICES

Substance Abuse and Mental Health Services Administration

Single Source Cooperative Agreement Award to the Brigham and Women's Hospital, Harvard University, Boston, MA

AGENCY: Center for Mental Health Services (CMHS), Substance Abuse and Mental Health Services Administration (SAMHSA), HHS.

ACTION: Notice of intent to award a single source cooperative agreement to Brigham and Women's Hospital, Harvard University, to support a program expansion and extension for the PRISMe multisite study Coordinating Center.

SUMMARY: The Center for Mental Health Services (CMHS), Substance Abuse and Mental Health Services Administration (SAMHSA), is publishing this notice to provide information to the public concerning a planned single source cooperative agreement award in the amount of $500,000 in FY 2002, and $500,000 in FY 2003 for a project period of two years to the Brigham and Women's Hospital, Harvard University. This is not a formal request for applications. Assistance will be provided only to Brigham and Women's Hospital based on the receipt of a satisfactory application that is approved by an independent review group.

Authority/Justification: The grant will be made under the authority of Section 520A of the Public Health Service Act, as amended. The award is intended to complete data analyses and write-up of the PRISMe multisite study findings, to complete the program manuals for the PRISMe study findings, and to produce an archive of the study database suitable for public use at the end of the project period. This award is being made on a single source basis because Brigham and Women's Hospital has coordinated the design and implementation of the PRISMe multisite study from which the additional data analyses, write-ups of study findings, program manuals, and archived database will be drawn. Making the award to another entity would require additional start-up time and costs, significant loss of critical information, as well as duplication of previously completed work.

The Catalog of Federal Domestic Assistance (CFDA) number for this program is 93.243.

CONTACT: For more information about this program, contact: Betsy McDonel Herr, Ph.D., Government Project Officer, Community Support Branch, Division of Knowledge Development and Systems Change, Center for Mental Health Services (CMHS), SAMHSA, Room 11C–22 Parklawn Building, 5600 Fishers Lane, Rockville, MD 20857, (301) 594–2197, *bmcdonel@samhsa.gov.*

Dated: June 20, 2002.

Richard Kopanda,

Executive Officer, SAMHSA.

[FR Doc. 02–16322 Filed 6–25–02; 1:58 pm]

BILLING CODE 4162–20–P

DEPARTMENT OF HEALTH AND HUMAN SERVICES

Substance Abuse and Mental Health Services Administration

Single Source Grant Award to the National Families in Action, Inc., Atlanta, GA

AGENCY: Center for Substance Abuse Prevention (CSAP), Substance Abuse and Mental Health Services Administration (SAMHSA), HHS.

ACTION: Notice of intent to award a single source grant to National Families in Action, Inc. to support updating, pilot testing and adaptation for different target audiences of the Basic Training I module for the National Parent Drug Prevention Corps.

SUMMARY: The Center for Substance Abuse Prevention (CSAP), Substance Abuse and Mental Health Services Administration (SAMHSA), is publishing this notice to provide information to the public concerning a planned single source grant award in the amount of $100,000 in FY 2002 for a project period of one year to the National Families in Action (NFIA). This is not a formal request for applications. Assistance will be provided only to NFIA based on the receipt of a satisfactory application that is approved by an independent review group.

Authority/Justification: The grant will be made under the authority of section 516 of the Public Health Service Act, as amended. The award is intended to support updating, pilot testing, adaptation for different target audiences of the Basic Training I module that will be used in the National Parent Drug Prevention Corps activities that CSAP

anticipates for FY 2003. This award is being made on a single source basis because NFIA has developed the original curriculum on which the Basic I training will be based and has the necessary training consultants and infrastructure in place to complete the pilot testing and refinement of the Basic I training curriculum prior to the start of the 2003 initiative. Making the award to another entity would require additional start-up time and costs, as well as duplication of previously completed work.

The Catalog of Federal Domestic Assistance (CFDA) number for this program is 93.243.

FOR FURTHER INFORMATION CONTACT: For more information about this program, contact: Dr. Alvera Stern, Acting Director, Division of Prevention, Application and Education, Center for Substance Abuse Prevention, SAMHSA, Rockwall II, Room 800, 5600 Fishers Lane, Rockville, MD 20857, (301) 443–0315.

Dated: June 20, 2002.

Richard Kopanda,

Executive Officer, SAMHSA.

[FR Doc. 02–16295 Filed 6–26–02; 8:45 am]

BILLING CODE 4162–20–P

DEPARTMENT OF HEALTH AND HUMAN SERVICES

Substance Abuse and Mental Health Services Administration

Fiscal Year (FY) 2002 Funding Opportunities

AGENCY: Substance Abuse and Mental Health Services Administration, HHS.

ACTION: Notice of Funding Availability for Targeted Capacity Expansion: National Technical Assistance Center for the Mental Health Services Needs of Older Adults.

SUMMARY: The Substance Abuse and Mental Health Services Administration (SAMHSA) Center for Mental Health Services (CMHS) announces the availability of FY 2002 funds for a cooperative agreement for the following activity. This notice is not a complete description of the activity; potential applicants *must* obtain a copy of the Guidance for Applicants (GFA), including Part I, *Targeted Capacity Expansion: National Technical Assistance Center for the Mental Health Services Needs of Older Adults (SM 02–016),* and Part II, *General Policies and Procedures Applicable to all SAMHSA Applications for Discretionary Grants and Cooperative Agreements,* before preparing and submitting an application.

Activity	Application deadline	Est. funds FY 2002	Est. number of awards	Project period
Older Adult Technical Assistance	July 24, 2002	$900,000	1	3 years.

The actual amount available for the award may vary, depending on unanticipated program requirements and the number and quality of applications received. This program is authorized under Section 520A of the Public Health Service Act. SAMHSA's policies and procedures for peer review and Advisory Council review of grant and cooperative agreement applications were published in the **Federal Register** (Vol. 58, No. 126) on July 2, 1993.

General Instructions: Applicants must use application form PHS 5161–1 (Rev. 7/00). The application kit contains the two-part application materials (complete programmatic guidance and instructions for preparing and submitting applications), the PHS 5161–1 which includes Standard Form 424 (Face Page), and other documentation and forms. Application kits may be obtained from: Knowledge Exchange Network (KEN), P.O. Box 42490, Washington, DC 20015, Telephone: 1–800–789–2647.

The PHS 5161–1 application form and the full text of the grant announcement are also available electronically via SAMHSA's World Wide Web Home Page: *http://www.samhsa.gov* (Click on ''Grant Opportunities'')

When requesting an application kit, the applicant must specify the particular announcement number for which detailed information is desired. All information necessary to apply, including where to submit applications and application deadline instructions, are included in the application kit.

Purpose: The Substance Abuse and Mental Health Services Administration (SAMHSA), Center for Mental Health Services (CMHS) announces the availability of fiscal year (FY) 2002 funds for increasing service capacity for older persons with mental health needs. One type of award will be made under the current announcement for a National Technical Assistance Center for the Mental Health Needs of Older Adults. The National Technical Assistance Center will identify, synthesize and disseminate the knowledge base for mental health outreach, prevention, early intervention, assessment, and treatment services for older persons.

Eligibility: Eligibility to apply for the National Technical Assistance Center will be limited to public and private nonprofit entities.

For example, the following are eligible to apply:

- State agencies or departments.
- County agencies.
- City agencies.
- State regional agencies.

Indian tribes or tribal organizations (as defined in Section 4(b) and Section 4(c) of the Indian Self-determination and Education Assistance Act).

- Private, not-for-profit agencies.
- Public or private universities.

States are defined in Section 2 of the PHS Act and include, in addition to the 50 States, the:

- District of Columbia.
- Guam.
- Commonwealth of Puerto Rico.
- Northern Mariana Islands.
- Virgin Islands.
- American Samoa.
- Trust Territory of the Pacific Islands (now Palau, Micronesia, and the Marshall Islands).

Interested parties who do not meet these criteria, are encouraged to partner with an agency or organization that is eligible to apply as the lead agency.

Applicants are encouraged to form partnerships with consumer, family, and consumer-supporter groups who are focused on the needs of older persons, both in the areas of mental health and the general issues of aging.

Applicants who applied for a Group I award as the lead organization under the program described under GFA No. SM 02–009 cannot apply as the lead organization for the Technical Assistance Center under this announcement.

Availability of Funds: It is estimated that a total of $900,000 will be available to support one award for a National Technical Assistance Center under this GFA in FY 2002. Actual funding levels will depend on the availability of funds. Support may be requested for a period of up to 3 years for the National Technical Assistance Center award (in three budget periods of 1 year each).

Period of Support: An award may be requested for a project period of up to 3 years.

Criteria for Review and Funding

General Review Criteria: Competing applications requesting funding under this activity will be reviewed for technical merit in accordance with established PHS/SAMHSA peer review procedures. Review criteria that will be used by the peer review groups are specified in the application guidance material.

Award Criteria for Scored Applications: Applications will be considered for funding on the basis of their overall technical merit as determined through the peer review group and the appropriate National Advisory Council review process. Availability of funds will also be an award criterion. Additional award criteria specific to the programmatic activity may be included in the application guidance materials.

Catalog of Federal Domestic Assistance Number: 93.243.

Program Contact: For questions concerning program issues, contact: Betsy McDonel Herr, PhD., Government Project Officer (GPO), Center for Mental Health Services, SAMHSA, Room 11C–22 Parklawn Building, 5600 Fishers Lane, Rockville, Maryland 20857, (301) 594–2197, E-mail: *bmcdonel@samhsa.gov.*

For questions regarding grants management issues, contact: Steve Hudak, Division of Grants Management, OPS/SAMHSA, Rockwall II, 6th floor, 5600 Fishers Lane, Rockville, MD 20857, (301) 443–9666, e-mail: *shudak@samhsa.gov.*

Public Health System Reporting Requirements: The Public Health System Impact Statement (PHSIS) is intended to keep State and local health officials apprised of proposed health services grant and cooperative agreement applications submitted by community-based nongovernmental organizations within their jurisdictions.

Community-based nongovernmental service providers who are not transmitting their applications through the State must submit a PHSIS to the head(s) of the appropriate State and local health agencies in the area(s) to be affected not later than the pertinent receipt date for applications. This PHSIS consists of the following information:

a. A copy of the face page of the application (Standard form 424).

b. A summary of the project (PHSIS), not to exceed one page, which provides:

(1) A description of the population to be served.

(2) A summary of the services to be provided.

(3) A description of the coordination planned with the appropriate State or local health agencies.

State and local governments and Indian Tribal Authority applicants are not subject to the Public Health System Reporting Requirements. Application guidance materials will specify if a particular FY 2002 activity is subject to the Public Health System Reporting Requirements.

PHS Non-use of Tobacco Policy Statement: The PHS strongly encourages all grant and contract recipients to provide a smoke-free workplace and promote the non-use of all tobacco products. In addition, Public Law 103–227, the Pro-Children Act of 1994, prohibits smoking in certain facilities (or in some cases, any portion of a facility) in which regular or routine education, library, day care, health care, or early childhood development services are provided to children. This is consistent with the PHS mission to protect and advance the physical and mental health of the American people.

Executive Order 12372: Applications submitted in response to the FY 2002 activity listed above are subject to the intergovernmental review requirements of Executive Order 12372, as implemented through DHHS regulations at 45 CFR Part 100. E.O. 12372 sets up a system for State and local government review of applications for Federal financial assistance. Applicants (other than Federally recognized Indian tribal governments) should contact the State's Single Point of Contact (SPOC) as early as possible to alert them to the prospective application(s) and to receive any necessary instructions on the State's review process. For proposed projects serving more than one State, the applicant is advised to contact the SPOC of each affected State. A current listing of SPOCs is included in the application guidance materials or on SAMHSA's website under ''Assistance with Grant Applications''. The SPOC should send any State review process recommendations directly to: Division of Extramural Activities, Policy, and Review, Substance Abuse and Mental Health Services Administration, Parklawn Building, Room 17–89, 5600 Fishers Lane, Rockville, Maryland 20857.

The due date for State review process recommendations is no later than 60 days after the specified deadline date for the receipt of applications. SAMHSA does not guarantee to accommodate or explain SPOC comments that are received after the 60-day cut-off.

Dated: June 20, 2002.

Richard Kopanda,

Executive Officer, SAMHSA.

[FR Doc. 02–16321 Filed 6–25–02; 1:58 pm]

BILLING CODE 4162–20–P

DEPARTMENT OF HEALTH AND HUMAN SERVICES

Substance Abuse and Mental Health Services Administration

Fiscal Year (FY) 2002 Funding Opportunities

AGENCY: Substance Abuse and Mental Health Services Administration, HHS.

ACTION: Notice of funding availability for a supplement to expand and extend the Cooperative Agreement for the National Center for Child Traumatic Stress (NCCTS).

SUMMARY: The Substance Abuse and Mental Health Services Administration (SAMHSA) Center for Mental Health Services (CMHS) announces the availability of FY 2002 funds for a grant for the following activity. This notice is not a complete description of the activity; potential applicants *must* obtain a copy of the Guidance for Applicants (GFA), including Part I, *Supplement to Expand and Extend the Cooperative Agreement for the National Center for Child Traumatic Stress (SM 02–014),* and Part II, *General Policies and Procedures Applicable to all SAMHSA Applications for Discretionary Grants and Cooperative Agreements,* before preparing and submitting an application.

Activity	Application deadline	Est. funds FY 2002	Est. Number of awards	Project period
Cooperative Agreement for the National Center for Child Traumatic Stress—Supplement.	July 24, 2002	$5.3 million	1	2 years.

The actual amount available for the award may vary, depending on unanticipated program requirements and the number and quality of applications received. This program is authorized under Section 582 of the

Public Health Service Act. SAMHSA's policies and procedures for peer review and Advisory Council review of grant and cooperative agreement applications were published in the **Federal Register** (Vol. 58, No. 126) on July 2, 1993.

General Instructions: Applicants must use application form PHS 5161–1 (Rev. 7/00). The application kit contains the two-part application materials (complete programmatic guidance and instructions for preparing and submitting applications), the PHS 5161–1 which includes Standard Form 424 (Face Page), and other documentation and forms. Application kits may be obtained from: Knowledge Exchange Network (KEN), P.O. Box 42490, Washington, DC 20015, Telephone: 1–800–789–2647.

The PHS 5161–1 application form and the full text of the activity are also available electronically via SAMHSA's World Wide Web Home Page: *http://www.samhsa.gov.*

When requesting an application kit, the applicant must specify the particular activity for which detailed information is desired. All information necessary to apply, including where to submit applications and application deadline instructions, are included in the application kit.

Purpose: The Substance Abuse and Mental Health Services Administration (SAMHSA), Center for Mental Health Services (CMHS) announces the availability of fiscal year (FY) 2002 funds for a supplement to expand and extend the cooperative agreement to develop and implement the National Center for Child Traumatic Stress (NCCTS). The NCCTS currently coordinates the National Child Traumatic Stress Network (NCTSN) and provides leadership and focus for 5 Intervention Development and Evaluation Centers (IDE) and 12 Community Treatment and Service Centers (CTS). These funds will enable NCCTS to (1) expand its Network and collaboration support for currently funded programs and extend this support to all new National Child Traumatic Stress Initiative (NCTSI) grantees funded in FY 2002; (2) comprehensively address the understanding, evaluation, and treatment of child traumatic stress resulting from disasters and terrorism; and (3) bring the knowledge gained and lessons learned from NCTSN to the nation through the National Resource Center on Child Traumatic Stress.

Eligibility: Eligibility is limited to the University of California at Los Angeles (UCLA). UCLA (in partnership with Duke University) has operated the currently funded NCCTS in its first year. The NCCTS has proven capable and effective in carrying out activities in pursuit of the goals of the NCTSI. This success is reflected in the expansion and supplementation of funding for NCTSI for FY 2002. The government's interest in building on capacity and infrastructure already developed with Government funds is a compelling argument for continuing the NCTSI coordination activities through the UCLA-Duke NCCTS. Further, duplication of effort and substantial confusion would result if a second ''National Center'' were established with a primary mission of networking and collaboration building in the NCTSI. For these reasons only the currently funded NCCTS, operated by UCLA, may apply for this award.

Availability of Funds: Approximately $5.3 million will be available for FY 2002 (both direct and indirect costs). Approximately $1.8 million of the award will be available (in FY 2002 only) to address child traumatic stress resulting from disasters and terrorism. In FY 2002 and FY 2003 approximately $2.55 million will be available to expand the general operations of the NCCTS (the Network is already expected to double in size in FY 2002) and approximately $950,000 of the award is expected to be put towards the expansion of the National Resource Center. The actual level will depend on appropriated funds and the application's budget justification.

Period of Support: An award may be requested for a project period of up to 2 years.

Criteria for Review and Funding:

General Review Criteria: Competing applications requesting funding under this activity will be reviewed for technical merit in accordance with established PHS/SAMHSA peer review procedures. Review criteria that will be used by the peer review groups are specified in the application guidance material.

Award Criteria for Scored Applications: Applications will be considered for funding on the basis of their overall technical merit as determined through the peer review group and the appropriate National Advisory Council review process. Availability of funds will also be an award criteria. Additional award criteria specific to the programmatic activity may be included in the application guidance materials.

Catalog of Federal Domestic Assistance Number: 93.243.

Program Contact: For questions concerning program issues, contact: Robert DeMartino, M.D., Associate Director for Program in Trauma and Terrorism, Division of Program Development, Special Populations and Projects, Center for Mental Health Services, SAMHSA, Room 17C–26, Parklawn Building, 5600 Fishers Lane, Rockville, MD 20857, (301) 443–2940, E-Mail: *rdemarti@samhsa.gov.*

For questions regarding grants management issues, contact: Steve Hudak, Division of Grants Management, OPS/SAMHSA, Rockwall II, 6th floor, 5600 Fishers Lane, Rockville, MD 20857, (301) 443–9666, E-Mail: *shudak@samhsa.gov.*

Public Health System Reporting Requirements: The Public Health System Impact Statement (PHSIS) is intended to keep State and local health officials apprised of proposed health services grant and cooperative agreement applications submitted by community-based nongovernmental organizations within their jurisdictions.

Community-based nongovernmental service providers who are not transmitting their applications through the State must submit a PHSIS to the head(s) of the appropriate State and local health agencies in the area(s) to be affected not later than the pertinent receipt date for applications. This PHSIS consists of the following information:

a. A copy of the face page of the application (Standard form 424).

b. A summary of the project (PHSIS), not to exceed one page, which provides:

(1) A description of the population to be served.

(2) A summary of the services to be provided.

(3) A description of the coordination planned with the appropriate State or local health agencies.

State and local governments and Indian Tribal Authority applicants are not subject to the Public Health System Reporting Requirements. Application guidance materials will specify if a particular FY 2002 activity is subject to the Public Health System Reporting Requirements.

PHS Non-use of Tobacco Policy Statement: The PHS strongly encourages all grant and contract recipients to provide a smoke-free workplace and promote the non-use of all tobacco products. In addition, Public Law 103–227, the Pro-Children Act of 1994, prohibits smoking in certain facilities (or in some cases, any portion of a facility) in which regular or routine education, library, day care, health care, or early childhood development services are provided to children. This is consistent with the PHS mission to protect and advance the physical and mental health of the American people.

Executive Order 12372: Applications submitted in response to the FY 2002 activity listed above are subject to the intergovernmental review requirements of Executive Order 12372, as implemented through DHHS regulations at 45 CFR Part 100. E.O. 12372 sets up a system for State and local government review of applications for Federal financial assistance. Applicants (other than Federally recognized Indian tribal governments) should contact the State's Single Point of Contact (SPOC) as early as possible to alert them to the prospective application(s) and to receive any necessary instructions on the State's review process. For proposed projects serving more than one State, the applicant is advised to contact the SPOC of each affected State. A current listing of SPOCs is included in the application guidance materials. The SPOC should send any State review process recommendations directly to: Division of Extramural Activities, Policy, and Review, Substance Abuse and Mental Health Services Administration, Parklawn Building, Room 17–89, 5600 Fishers Lane, Rockville, Maryland 20857.

The due date for State review process recommendations is no later than 60 days after the specified deadline date for the receipt of applications. SAMHSA does not guarantee to accommodate or explain SPOC comments that are received after the 60-day cut-off.

Dated: June 20, 2002.

Richard Kopanda,

Executive Officer, SAMHSA.

[FR Doc. 02–16296 Filed 6–26–02; 8:45 am]

BILLING CODE 4162–20–P

DEPARTMENT OF THE INTERIOR

Office of the Secretary

Delaware & Lehigh National Heritage Corridor Commission Meeting

AGENCY: Department of the Interior.

ACTION: Notice of meeting.

SUMMARY: This notice announces an upcoming meeting of the Delaware & Lehigh National Heritage Corridor Commission. Notice of this meeting is required under the Federal Advisory Committee Act (Public Law 92463).

MEETING DATE AND TIME: Friday, July 12, 2002, Time: 1:30 p.m. to 4 p.m.

ADDRESSES: Hanna's Ugly Mug Restaurant, 217219 Main Street, White Haven, PA 18661.

The agenda for the meeting will focus on implementation of the Management Action Plan for the Delaware & Lehigh National Heritage Corridor and State Heritage Park. The Commission was established to assist the Commonwealth of Pennsylvania and its political subdivisions in planning and implementing an integrated strategy for protecting and promoting cultural, historic and natural resources. The Commission reports to the Secretary of the Interior and to Congress.

SUPPLEMENTARY INFORMATION: The Delaware & Lehigh National Heritage Corridor Commission was established by Public Law 100–692, November 18, 1988 and extended through Public Law 105–355, November 13, 1998.

FOR FURTHER INFORMATION CONTACT: C. Allen Sachse, Executive Director, Delaware & Lehigh National Heritage Corridor Commission, 10 E. Church Street, Room A–208, Bethlehem, PA 18018, (610) 861–9345.

Dated: June 21, 2002.

C. Allen Sachse,

Executive Director, Delaware & Lehigh National Heritage Corridor Commission.

[FR Doc. 02–16227 Filed 6–26–02; 8:45 am]

BILLING CODE 6820–PE–M

INTERNATIONAL TRADE COMMISSION

[Investigation No. 337–TA–461]

In the Matter of Certain Clay Target Throwing Machines and Components Thereof; Notice of Commission Determination Not To Review an Initial Determination Granting a Joint Motion To Terminate the Investigation as to All Respondents on the Basis of a Settlement Agreement; Termination of Investigation

AGENCY: International Trade Commission.

ACTION: Notice.

SUMMARY: Notice is hereby given that the U.S. International Trade Commission has determined not to review an initial determination (''ID'') of the presiding administrative law judge (''ALJ'') granting the joint motion of complainant Stuart Patenaude (''complainant'') and respondents Gösta Gustafssons Mekaniska Vekstad AB, of Arboga, Sweden; GMV Superstar AB, of Arboga, Sweden; and Gert Holmqvist Enterprises, Ltd., of Okotoks, Alberta, Canada (''respondents'') to terminate the investigation as to respondents on the basis of a settlement agreement. Termination of these respondents terminates the investigation.

FOR FURTHER INFORMATION CONTACT: Michael Diehl, Esq. or Andrea Casson, Esq., Office of the General Counsel, U.S. International Trade Commission, telephone (202) 205–3095 or (202) 205–3105. Copies of the ALJ's ID and all other nonconfidential documents filed in connection with this investigation are or will be available for inspection during official business hours (8:45 a.m. to 5:15 p.m.) in the Office of the Secretary, U.S. International Trade Commission, 500 E Street, SW., Washington, DC 20436, telephone (202) 205–2000. Hearing-impaired persons are advised that information on this matter can be obtained by contacting the Commission's TDD terminal on (202) 205–1810. General information concerning the Commission may also be obtained by accessing its Internet server (*http://www.usitc.gov*). The public record of this investigation may be viewed on the Commission's electronic docket (EDIS–ON–LINE) at *http://dockets.usitc.gov/eol/public.*

SUPPLEMENTARY INFORMATION: This investigation was instituted on August 7, 2001, to determine whether there is a violation of section 337 of the Tariff Act of 1930, as amended, in the importation into the United States, sale for importation, or the sale within the United States after importation of certain clay target throwing machines and components thereof by reason by infringement of claims 1 or 6 of U.S. Letters Patent 5,249,563, or claims 1, 9, 10, 15, or 16 of U.S. Letters Patent 6,176,229 and whether an industry in the United States exists as required by subsection (a)(2) of section 337. 66 FR 42168 (2001). On March 13, 2002, complainant and respondents filed a Joint Motion for Termination of Investigation As to [Respondents] Based Upon a Settlement Agreement and License. On March 22, 2002, the Commission investigative attorney filed a response in support of the joint motion. On June 6, 2002, the presiding ALJ issued an ID (Order No. 5) granting the joint motion based on the settlement agreement and a non-exclusive patent license. There being no other respondents in the investigation, the ALJ ordered the investigation terminated in its entirety. No party petitioned for review of the ID.

This action is taken under the authority of section 337 of the Tariff Act of 1930, as amended, 19 U.S.C. 1337, and Commission rule 210.42(h), 19 CFR 210.42(h).

Issued: June 21, 2002.

By order of the Commission.

Marilyn R. Abbott,

Secretary to the Commission.

[FR Doc. 02–16239 Filed 6–26–02; 8:45 am]

BILLING CODE 7020–02–P

INTERNATIONAL TRADE COMMISSION

[Inv. No. 337–TA–450]

Certain Intergrated Circuits, Processes for Making Same, and Products Containing Same; Notice of Commission Decision to Review Portions of an Initial Determination Finding No Violation of Section 337 of the Tariff Act of 1930

AGENCY: International Trade Commission.

ACTION: Notice.

SUMMARY: Notice is hereby given that the U.S. International Trade Commission has determined to review certain portions of a final initial determination (ID) of the presiding administrative law judge (ALJ) finding no violation of section 337 of the Tariff Act of 1930, as amended, in the above-captioned investigation.

FOR FURTHER INFORMATION CONTACT: Clara Kuehn, Esq., Office of the General Counsel, U.S. International Trade Commission, 500 E Street, SW., Washington, DC 20436, telephone (202) 205–3012. Hearing-impaired persons are advised that information on this matter can be obtained by contacting the Commission's TDD terminal on 202–205–1810. General information concerning the Commission may also be obtained by accessing its Internet server (*http://www.usitc.gov.*)

Copies of the public version of the ALJ's ID and all other nonconfidential documents filed in connection with this investigation are or will be available for inspection during official business hours (8:45 a.m. to 5:15 p.m.) in the Office of the Secretary, U.S. International Trade Commission, 500 E Street, SW., Washington, D.C. 20436, telephone 202–205–2000.

SUPPLEMENTARY INFORMATION: The Commission instituted this investigation by notice published in the **Federal Register** on March 6, 2001. 66 FR 13567 (2001). The complainants are United Microelectronics Corporation, Hsinchu City, Taiwan; UMC Group (USA), Sunnyvale, CA; and United Foundry Service, Inc., Hopewell Junction, NY. Id. The Commission named two respondents, Silicon Integrated Systems Corp., Hsinchu City, Taiwan, and Silicon Integrated Systems Corporation, Sunnyvale, CA (collectively, ''SiS''). Id. The complaint, as supplemented, alleged violations of section 337 in the importation, the sale for importation, and the sale within the United States after importation of certain integrated circuits and products containing same by reason of infringement of claims 1, 2, and 8 of U.S. Letters Patent 5,559,352 (''the '352 patent'') and claims 1, 3–16, and 19–21 of U.S. Letters Patent 6,117,345 (''the '345 patent''). Id.

On November 2, 2001, the presiding ALJ issued an ID (ALJ Order No. 15) granting complainants' motion for summary determination on the issue of importation and denying respondents' motion for summary determination of lack of importation. That ID was not reviewed by the Commission. A tutorial session was held on November 5, 2001, and an evidentiary hearing was held from November 7, 2001, through November 16, 2001, and from December 10, 2001, through December 12, 2001.

The ALJ issued his final ID on May 6, 2002, concluding that there was no violation of section 337. With respect to the '352 patent, the ALJ found that: complainants have not established that the domestic industry requirement is met; none of respondents' accused devices practice any asserted claim of the '352 patent literally or under the doctrine of equivalents; and claims 1 and 2 of the '352 patent are invalid as anticipated under 35 U.S.C. 102 and claim 8 of the '352 patent is invalid for obviousness under 35 U.S.C. 103. The ALJ found each of the '345 patent claims listed in the notice of investigation, i.e., claims 1, 3–16, 19–20, and 21, invalid as anticipated by and made obvious by certain prior art. The ALJ stated that, in their post-hearing filings, complainants asserted only claims 1, 3–5, 9, 11–13, and 20–21 of the '345 patent against respondents. He found that, if valid, each of the asserted claims of the '345 patent, i.e., claims 1, 3–5, 9, 11–13, and 20–21, is literally infringed by SiS's existing (or old) SiON manufacturing process, but that respondents' new N_2O process does not infringe any asserted claim of the '345 patent. The ALJ further found that a domestic industry exists with respect to the '345 patent. On May 13, 2002, the ALJ issued his recommended determination on remedy and bonding.

On May 17, 2002, complainants and the Commission investigative attorney (''IA'') petitioned for review of the subject ID, and respondents filed a contingent petition for review. On May 24, 2002, complainants, the IA, and respondents filed responses.

Having examined the record in this investigation, including the ID, the petitions for review, and the responses thereto, the Commission has determined to review and clarify that the ALJ found claim 13 of the '345 patent made obvious, but not anticipated, by the Tobben patent. The Commission has also determined to review:

(1) the ALJ's findings and conclusions of law regarding the '352 patent with respect to infringement of the asserted claims and domestic industry under the doctrine of equivalents;

(2) the ALJ's finding that respondents' old E5 model ESD transistor does not infringe any asserted claim of the '352 patent, either literally or equivalently;

(3) the ALJ's claim construction of the limitations ''an ESD protection device'' (claims 1, 2, and 8 of the '352 patent), ''a gate'' (claims 1 and 2), ''gates'' (claim 8), and ''source/drain regions * * * with each source/drain region comprising'' (claims 1, 2, and 8), and the ALJ's invalidity, domestic injury, and infringement findings and conclusions of law with respect to those limitations;

(4) the ALJ's finding that claim 8 of the '352 patent is invalid as made obvious by a combination of prior art references;

(5) whether the economic prong of the domestic industry requirement is met with respect to the '352 patent;

(6) the ALJ's findings that the ''second antireflective coating'' (claim 1 and asserted dependent claims 3–8 of the '345 patent) and ''cap layer'' (claims 9–16, 19–20, and 21 of the '345 patent) are disclosed in the Tobben patent, and consequently (a) the ALJ's findings with respect to etching the second antireflective coating or cap layer (claims 4 and 12), (b) the ALJ's ultimate finding that the Tobben patent anticipates claims 1, 3–16, 19–20, and 21 of the '345 patent, and (c) the ALJ's conclusion that claim 13 is made obvious by the Tobben patent and other prior art;

(7) the ALJ's conclusion that claim 13 of the '345 patent is invalid as obvious in light of the Tobben patent; and

(8) the ALJ's conclusion that claims 1, 3–16, 19–20, and 21 of the '345 patent are invalid as made obvious by the Abernathey patent in combination with the Pan, Yagi, and/or Yota publications.

The Commission has determined not to review the remainder of the ID, including the ID's conclusions and findings of fact with respect to whether the Tobben patent is prior art to the '345 patent, infringement of the asserted claims of the '345 patent, domestic industry concerning the '345 patent, and failure to disclose the best mode of practicing the invention of the '345 patent.

On review, the Commission requests briefing based on the evidentiary record on all issues under review and is particularly interested in receiving answers to the following questions, with all answers cited to the evidentiary record:

1. Have complainants established the economic prong of the domestic industry requirement with respect to the '352 patent?

2. Should the term ''an ESD protection device'' in claims 1, 2, and 8 of the '352 patent be construed to require a protection device that is separate and apart from the circuit it protects?

3. Assuming that the term ''a gate'' refers to a single, particular gate for a specific FET (but without excluding multiple-FET ESD protection devices) (ID at 14–15), should the limitation ''source/drain regions * * * with each source/drain region comprising'' be construed as excluding from the claimed ESD protection device source/drain regions that lack one or more of the three implants (i.e., the ''first lightly implanted region,'' ''heavier implanted region,'' and ''second lightly implanted region'')? In responding to this question please address the ''open'' transition in claim 1 of the '352 patent (''An ESD protection device * * * comprising'').

4. In light of your answers to questions 2 and 3, are claims 1, 2, or 8 of the '352 patent infringed (literally or under the doctrine of equivalents)? Have complainants established the technical prong of the domestic industry requirement with respect to the '352 patent? In your response, please address *Festo Corp.* v. *Shoketsu Kinzoku Kogyo Kabushiki Co.,* 122 S.Ct. 1831 (2002).

5. Does respondents' old E5 model ESD transistor infringe any asserted claim of the '352 patent? In your response, please address *Symbol Technologies, Inc.* v. *Opticon, Inc.,* 935 F.2d 1569 (Fed. Cir. 1991).

6. In light of your answers to questions 2 and 3, are claims 1, 2, or 8 of the '352 patent invalid?

7. In light of the ALJ's construction of the term ''antireflective coating'' to require, inter alia, ''an antireflective effect * * *. whether through absorption or interference * * * significant to the purposes of the invention'' (ID at 79), does the Tobben patent's planarization layer disclose the ''second antireflective coating'' of claim 1 (and dependent claims 3–8) of the '345 patent?

8. In light of the ALJ's construction of the term ''cap layer'' of independent claims 9 and 21 of the '345 patent (ID at 119–20), does the Tobben patent disclose a cap layer that acts as either (a) an ''antireflective coating'' or (b) a protector for the top corners of metal wiring lines during the HDPCVD process? With respect to (a), above, please address column 3, lines 6–20 of the Tobben patent.

9. Assuming that claim 9 of the '345 patent is anticipated by the Tobben patent, is claim 13 obvious?

10. For purposes of obviousness under 35 U.S.C. 103, does the Abernathey patent teach one of ordinary skill in the relevant art a barrier layer that serves as an ''antireflective coating''? In your response please address how one of ordinary skill in the art would understand the thickness of the silicon dioxide barrier layer disclosed in the Abernathey patent.

11. Was the issue of the publication dates of the Yota, Pan, and Yagi references (see complainants' petition for review at 77) raised before the ALJ?

In connection with the final disposition of this investigation, the Commission may issue (1) an order that could result in the exclusion of the subject articles from entry into the United States, and/or (2) cease and desist orders that could result in respondents being required to cease and desist from engaging in unfair acts in the importation and sale of such articles. Accordingly, the Commission is interested in receiving written submissions that address the form of remedy, if any, that should be ordered. If a party seeks exclusion of an article from entry into the United States for purposes other than entry for consumption, the party should so indicate and provide information establishing that activities involving other types of entry that either are adversely affecting it or are likely to do so. For background information, see the Commission Opinion, In the Matter of Certain Devices for Connecting Computers via Telephone Lines, Inv. No. 337–TA–360. If the Commission contemplates some form of remedy, it must consider the effects of that remedy upon the public interest. The factors the Commission will consider include the effect that an exclusion order and/or cease and desist orders would have on (1) the public health and welfare, (2) competitive conditions in the U.S. economy, (3) U.S. production of articles that are like or directly competitive with those that are subject to investigation, and (4) U.S. consumers. The Commission is therefore interested in receiving written submissions that address the aforementioned public interest factors in the context of this investigation.

If the Commission orders some form of remedy, the President has 60 days to approve or disapprove the Commission's action. During this period, the subject articles would be entitled to enter the United States under a bond, in an amount to be determined by the Commission and prescribed by the Secretary of the Treasury. The Commission is therefore interested in receiving submissions concerning the amount of the bond that should be imposed.

On May 6, 2002, the ALJ issued Order No. 24 granting in part complainants' September 13, 2001, motion for sanctions. Pursuant to rule 210.25(d) of the Commission's Rules of Practice and Procedure, 19 CFR 210.25(d), the Commission has specified below the schedule for the filing of any petitions appealing Order No. 24 and the responses thereto.

Written Submissions

The parties to the investigation are requested to file written submissions on the issues under review. The submission should be concise and thoroughly referenced to the record in this investigation, including references to exhibits and testimony. Additionally, the parties to the investigation, interested government agencies, and any other interested persons are encouraged to file written submissions on the issues of remedy, the public interest, and bonding. Such submissions should address the ALJ's May 13, 2002, recommended determination on remedy and bonding. Complainant and the Commission investigative attorney are also requested to submit proposed remedial orders for the Commission's consideration. The written submissions and proposed remedial orders must be filed no later than the close of business on July 5, 2002. Reply submissions must be filed no later than the close of business on July 12, 2002. No further submissions will be permitted unless otherwise ordered by the Commission.

Any petitions appealing Order No. 24 must be filed no later than close of business on July 26, 2002. Reply submissions must be filed no later than the close of business on August 2, 2002.

Persons filing written submissions must file with the Office of the Secretary the original and 14 true copies thereof on or before the deadlines stated above. Any person desiring to submit a document (or portion thereof) to the Commission in confidence must request confidential treatment unless the information has already been granted such treatment during the proceedings. All such requests should be directed to the Secretary of the Commission and must include a full statement of the reasons why the Commission should grant such treatment. See 19 CFR 201.6. Documents for which confidential treatment is granted by the Commission will be treated accordingly. All nonconfidential written submissions

will be available for public inspection at the Office of the Secretary.

This action is taken under the authority of section 337 of the Tariff Act of 1930, as amended (19 U.S.C. 1337), and in sections 210.25 and 210.42–.45 of the Commission's Rules of Practice and Procedure (19 CFR 210.25, 210.42–.45).

Issued: June 21, 2002.

By order of the Commission.

Marilyn R. Abbott,

Secretary.

[FR Doc. 02–16243 Filed 6–26–02; 8:45 am]

BILLING CODE 7020–02–P

INTERNATIONAL TRADE COMMISSION

[Investigations Nos. 701–TA–415 and 731–TA–933–934 (Final)]

Polyethylene Terephthalate Film, Sheet, and Strip From India and Taiwan

Determinations

On the basis of the record [1] developed in the subject investigations, the United States International Trade Commission determines, pursuant to sections 705(b) and 735(b) of the Tariff Act of 1930 (19 U.S.C. 1671d(b) and 19 U.S.C. 1673d(b)) (the Act), respectively, that an industry in the United States is materially injured by reason of imports from India of polyethylene terephthalate film, sheet, and strip (PET film), provided for in subheading 3920.62.00 of the Harmonized Tariff Schedule of the United States, that have been found by the Department of Commerce to be subsidized by the Government of India and by reason of imports from India and Taiwan of PET film that have been found by the Department of Commerce to be sold in the United States at less than fair value (LTFV).

Background

The Commission instituted these investigations effective May 17, 2001, following receipt of a petition filed with the Commission and Commerce by DuPont Teijin Films, Wilmington, DE, Mitsubishi Polyester Film of America, Greer, SC, and Toray Plastics (America), Inc., North Kensington, RI. The final phase of the investigations was scheduled by the Commission following notification of preliminary determinations by Commerce that imports of PET film from India were being subsidized within the meaning of section 703(b) of the Act (19 U.S.C. 1671b(b)) and that imports of PET film from India and Taiwan were being sold at LTFV within the meaning of section 733(b) of the Act (19 U.S.C. 1673b(b)). Notice of the scheduling of the final phase of the Commission's investigations and of a public hearing to be held in connection therewith was given by posting copies of the notice in the Office of the Secretary, U.S. International Trade Commission, Washington, DC, and by publishing the notice in the **Federal Register** of February 1, 2002 (67 FR 4995). The hearing was held in Washington, DC, on May 9, 2002, and all persons who requested the opportunity were permitted to appear in person or by counsel.

The Commission transmitted its determinations in these investigations to the Secretary of Commerce on June 18, 2002. The views of the Commission are contained in USITC Publication 3518 (June 2002), entitled *Polyethylene Terephthalate Film, Sheet, and Strip from India and Taiwan: Investigations Nos. 701–TA–415 and 731–TA–933–934 (Final).*

By order of the Commission.

Issued: June 24, 2002.

Marilyn R. Abbott,

Secretary to the Commission.

[FR Doc. 02–16312 Filed 6–26–02; 8:45 am]

BILLING CODE 7020–02–P

[1] The record is defined in sec. 207.2(f) of the Commission's Rules of Practice and Procedure (19 CFR 207.2(f)).

INTERNATIONAL TRADE COMMISSION

[Investigations Nos. 731–TA–935–936 and 938–942 (Final)]

Certain Structural Steel Beams From China, Germany, Luxembourg, Russia, South Africa, Spain, and Taiwan

Determinations

On the basis of the record [1] developed in the subject investigations, the United States International Trade Commission determines,[2] pursuant to section 735(b) of the Tariff Act of 1930 (19 U.S.C. 1673d(b)) (the Act), that an industry in the United States is not materially injured or threatened with material injury, and the establishment of an industry in the United States is not materially retarded, by reason of imports from China, Germany, Luxembourg, Russia, South Africa, Spain, and Taiwan of certain structural steel beams, provided for in subheadings 7216.32.00 and 7216.33.00 of the Harmonized Tariff Schedule of the United States, that have been found by the Department of Commerce to be sold in the United States at less than fair value (LTFV).

Background

The Commission instituted these investigations effective May 23, 2001, following receipt of petitions filed with the Commission and Commerce by the Committee for Fair Beam Imports and its individual members Northwestern Steel & Wire Co., Sterling IL; Nucor Corp., Charlotte, NC; Nucor-Yamato Steel Co., Blytheville, AR; and TXI-Chaparral Steel Co., Midlothian, TX. The final phase of the investigations was scheduled by the Commission following notification of preliminary determinations by Commerce that imports of certain structural steel beams from China, Germany, Russia, South Africa, and Taiwan were being sold at LTFV within the meaning of section 733(b) of the Act (19 U.S.C. 1673b(b)). Although Commerce made negative preliminary determinations with respect to imports from Luxembourg [3] and Spain, the Commission decided, for purposes of efficiency, to proceed concurrently with the final phase of all the investigations. Notice of the scheduling of the final phase of the Commission's investigations and of a public hearing to be held in connection therewith was given by posting copies of the notice in the Office of the Secretary, U.S. International Trade Commission, Washington, DC, and by publishing the notice in the **Federal Register** of February 7, 2002 (67 FR 5851). The hearing was held in Washington, DC, on May 15, 2002, and all persons who requested the opportunity were permitted to appear in person or by counsel.

The Commission transmitted its determinations in these investigations to the Secretary of Commerce on June 28, 2002. The views of the Commission are contained in USITC Publication 3522 (June 2002), entitled Certain Structural Steel Beams from China, Germany, Luxembourg, Russia, South Africa, Spain, and Taiwan: Investigations Nos. 731–TA–935–936 and 938–942 (Final).

Issued: June 24, 2002.

By order of the Commission.

Marilyn R. Abbott,

Secretary to the Commission.

[FR Doc. 02–16305 Filed 6–26–02; 8:45 am]

BILLING CODE 7020–02–P

[1] The record is defined in sec. 207.2(f) of the Commission's Rules of Practice and Procedure (19 CFR § 207.2(f)).

[2] Commissioner Lynn M. Bragg dissenting.

[3] Although Commerce initially made an affirmative dumping determination, it published an amended preliminary determination of sales at not less than fair value on January 31, 2002.

DEPARTMENT OF JUSTICE

Notice Relating to Public Comment Period on Environmental Settlement in In Re Fruit of the Loom, Inc.

Notice is hereby given of an extension of the period for public comment with respect to the St. Louis Facility, Breckenridge Facility, and Hollywood Dump Facility under the proposed settlement entered into by the United States on behalf of U.S. EPA, Department of Interior, National Oceanic and Atmospheric Administration of the Department of Commerce, and the Nuclear Regulatory Commission, the States of Illinois, Michigan, New Jersey, and Tennessee, Debtors Fruit of the Loom, Inc. and NWI Land Management Corp., and Velsicol Chemical Corporation and True Specialty Corporation, which was filed on April 17, 2002 in *In re Fruit of the loom, Inc.*, No. 99–4497 (PJW) with the United States Bankruptcy Court for the District of Delaware. The public comment period has been extended until July 9, 2002 but only with respect to comments relating to the St. Louis Facility in St. Louis, Michigan; the Breckenridge Facility in St. Louis/Breckenridge, Michigan; and the Hollywood Dump Facility in Memphis, Tennessee. The proposed settlement would, *inter alia*, resolve certain claims of the Governmental Parties against the settling parties under the Comprehensive Environmental Response Compensation and Liability Act, 42 U.S.C. 9601 *et seq.*, Section 7003 of the Resource Conservation and Recovery Act (''RCRA''), 42 U.S.C. 6973, and the Atomic Energy Act, 42 U.S.C. §§ 2011 *et seq.*, relating to those Facilities. Under the settlement, *inter alia*, the following will be dedicated to fund response action or costs and natural resource damage assessment or restoration at certain Facilities: (1) $4,292,808 to be paid in full as an Allowed Administrative Expense; (2) certain proceeds from general liability insurance claims; (3) certain future recoveries from preferred shares of stock in True Specialty Corporation; and (4) certain proceeds from Fruit of the Loom's and Velsicol's ''cost cap'' and pollution legal liability insurance policies.

The United States published notice of the lodging of the Settlement Agreement in the **Federal Register** on May 2, 2002. 67 Fed. Reg. 22108 (2002). In response to requests for an extension of the public comment period, the United States has elected to extend the comment period with respect to these three Facilities and to accept public comments *received* no later than July 9, 2002. Comments should be addressed to the Assistant Attorney General of the Environment and Natural Resources Division, Department of Justice, P.O. Box 7611, Ben Franklin Station, Washington, DC 20044, and should refer to *In re Fruit of the Loom, Inc.*, D.J. Ref. No. 90–11–2–07096. Copies of the proposed settlements may be examined at the Office of the United States Attorney for the District of Delaware, 1201 Market Street, Suite 1100, Wilmington, DE, the United States Environmental Protection Agency, Region 2, 290 Broadway, 17th Floor, New York, New York, the United States Environmental Protection Agency, Region 4, 61 Forsyth Street, SW., Atlanta, Georgia, and the United States Environmental Protection Agency, Region 5, 77 West Jackson Blvd., 14th Floor, Chicago, Illinois. Copies of the proposed settlements may also be obtained by request addressed to the Department of Justice Consent Decree Library, P.O. Box 7611, Ben Franklin Station, Washington, DC 20044. In requesting a copy of the proposed settlements, please enclose a check in the amount of $24.75 for (25 cents per page for reproduction costs), payable to the United States Treasurer.

Bruce S. Gelber,

Section Chief, Environmental Enforcement Section, Environment and Natural Resources Division.

[FR Doc. 02–16214 Filed 6–26–02; 8:45 am]

BILLING CODE 4410–15–M

DEPARTMENT OF JUSTICE

Notice of Lodging Proposed Consent Decree

In accordance with Departmental Policy, 28 CFR 50.7, notice is hereby given that a proposed consent decree in *United States* v. *Henry J. Magnan,* Civil Action No. 1:01–CV–333 (D.VT), was lodged with the United States District Court for the District of Vermont on June 14, 2002. This proposed Consent Decree concerns a complaint filed by the United States against Henry J. Magnan, pursuant to Sections 301(a) and 404 of the Clean Water Act, 33 U.S.C. 1311(a) and 1344, and imposes civil penalties against Defendant Henry J. Magnan, for the unauthorized discharge of dredged or fill material into waters of the United States located in wetlands on property in Farfield, Vermont.

The proposed Consent Decree requires the payment of civil penalties in the amount of $5,000 and requires Henry J. Magnan to restore the wetland and implement certain mitigation measures restricting livestock use of the riparian area.

The Department of Justice will accept written comments relating to this proposed Consent Decree for thirty (30) days from the date of publication of this notice. Please address comments to Joseph R. Perella, Assistant United States Attorney, United States Attorney's Office, P.O. Box 570, Burlington, Vermont 05402, and refer to *United States* v. *Magnan,* Civ. No. 1:01–CV–333 (D.VT).

The proposed Consent Decree may be examined at the Clerk's Office, United States District Court for the District of Vermont, 204 Main St., Brattleboro, Vermont. In addition, the proposed consent decree may be viewed on the World Wide Web at *http://www.usdoj.gov/enrd/enrd-home.html.*

Scott A. Schachter,

Assistant Chief Environmental Defense Section.

[FR Doc. 02–16215 Filed 6–26–02; 8:45 am]

BILLING CODE 4410–15–M

DEPARTMENT OF JUSTICE

Membership of the 2002 Senior Executive Service Performance Review Boards

AGENCY: Department of Justice

ACTION: Notice of Department of Justice's 2002 Senior Executive Service Performance Review Boards.

SUMMARY: Pursuant to the requirements of 5 U.S.C. 4314(c)(4), the Department of Justice announces the membership of its Senior Executive Service (SES) Performance Review Boards (PRBs). The purpose of the PRBs is to provide fair and impartial review of SES performance appraisals and bonus recommendations. The PRBs will make recommendations regarding the final performance ratings to be assigned and SES bonuses to be awarded.

FOR FURTHER INFORMATION CONTACT: Debra M. Tomchek, Director, Personnel Staff, Justice Management Division, Department of Justice, Washington, DC 20530; (202) 514–6788.

Department of Justice, 2002 Senior Executive Service Performance Review Board Members

Office of the Solicitor General

Lawrence G. Wallace, Deputy Solicitor General

Office of Legal Counsel

Paul P. Colborn, Special Counsel

Office of Professional Responsibility

Judith B. Wish, Deputy Counsel on Professional Responsibility

Office of Intelligence Policy and Review

Robert O. Davis, Deputy Counsel for Intelligence Policy

Office of Policy Development

Kevin R. Jones, Deputy Assistant Attorney General

Office of Information and Privacy

Daniel J. Metcalfe, Director (Policy and Litigation)

Antitrust Division

Norman Familant, Chief, Economic Litigation Section
Roger W. Fones, Chief, Transportation, Energy, and Agriculture Section
Thomas D. King, Executive Officer
J. Robert Kramer, Chief, Litigation II Section

Civil Division

JoAnn J. Bordeaux, Deputy Director, Torts Branch
Jeanne E. Davidson, Deputy Director, Commercial Litigation Branch
Douglas N. Letter, Appellate Litigation Counsel, Appellate Staff
Eugene M. Thirolf, Director, Office of Consumer Litigation

Civil Rights Division

James S. Angus, Deputy Assistant Attorney General
David K. Flynn, Chief, Appellate Section
Albert N. Moskowitz, Chief, Criminal Section
John L. Wodatch, Chief, Disability Rights Section

Criminal Division

Sandra J. Bright, Executive Officer
Joseph E. Gangloff, Senior Counsel, Office of International Affairs
Julie E. Samuels, Director, Office of Policy and Legislation
Patty M. Stemler, Chief Appellate Section
Mary I. Warlow, Director, Office of International Affairs
Mary Lee Warren, Deputy Assistant Attorney General

Environment and Natural Resources Division

Robert L. Bruffy, Executive Officer
Virginia, P. Butler, Chief, Land Acquisition Section
Eileen Sobeck, Deputy Assistant Attorney General
Jean E. Williams, Chief, Wildlife and Marine Resources Section

Justice Management Division

Mary A. Braden, Director, Department Ethics Office
Leon J. Lofthus, Director Finance Staff
Theodius McBurrows, Director, Equal Employment Opportunity Staff
James E. Price, Director, Computer Services Staff

Tax Division

Stephen J. Csontos, Senior Legislative Counsel
David A. Hubert, Chief, Civil Trial Section, Eastern Region
Robert S. Watkins, Chief, Civil Trial Section, Central Region
Joseph E. Young, Executive Officer

Bureau of Prisons

Robin L. Beusse, Chief, Budget Development Administration Division
Joyce K. Conley, Senior Assistant Director, Administration Division
Michael W. Garrett, Senior Deputy Assistant Director, Program Review Division
John C. Hardwick, Deputy Assistant Director, Information, Policy, and Public Affairs
Maryellen Thoms, Assistant Director Health Services Division
John M. Vanyur, Senior Deputy Assistant Director, Correctional Programs Division

Immigration and Naturalization Service

J. Scott Blackman, Regional Director, Eastern Region
Michael D. Cronin, Assistant Commissioner for Policy and Inspection
Janis A. Sposato, Assistant Deputy Executive Associate Commissioner for Immigration Services
William T. Veal, Chief Patrol Agent, San Diego Sector
William R. Yates, Deputy Executive Associate Commissioner for Immigration Services
David A. Yentzer, Assistant Commissioner, Administration

United States Marshals Service

Gary E. Mead, Assistant Director for Business Services

Office of Justice Programs

Carolyn A. Hightower, Deputy Director, Office for Victims of Crime
Gary N. Silver, Director, Office of Administration

Executive Office of Immigration Review

Charles Adkins-Blanch, General Counsel
Margaret M. Philbin, Deputy Director

Executive Office for United States Attorneys

Steven J. Parent, Deputy Director for Financial Management

Executive Office for United States Trustees

Jeffrey M. Miller, Associate Director
Edward F. Cincinnati, Executive Officer

National Drug Intelligence Center

Michael T. Horn, Director, National Drug Intelligence Center

Valerie M. Willis,

Executive Secretary, Senior Executive Resources Board.

[FR Doc. 02–16218 Filed 6–26–02; 8:45 am]

BILLING CODE 4410–AR–M

DEPARTMENT OF JUSTICE

Antitrust Division

Notice Pursuant to the National Cooperative Research and Production Act of 1993—Chemical, Biological and Radiological Technology Alliance (''CBRTA'')

Notice is hereby given that, on May 29, 2002, pursuant to section 6(a) of the National Cooperative Research and Production Act of 1993, 15 U.S.C. 4301 *et seq.* (''the Act''), 3M Company (''3M'') has filed written notifications simultaneously with the Attorney General and the Federal Trade Commission disclosing (1) the identities of the parties and (2) the nature and objectives of the venture. The notifications were filed for the purpose of invoking the Act's provisions limiting the recovery of antitrust plaintiffs to actual damages under specified circumstances. Pursuant to section 6(b) of the Act, the identities of the parties are 3M Company, St. Paul, MN; Becton Dickinson and Company, acting through its BD Biosciences Business Unit, Franklin Lakes, NJ; BV Solutions Group, Inc., Overland Park, KS; Calspan-UB Research Center, Buffalo, NY; Cargill Incorporated, Wayzata, MN; General Dynamics Government Systems Corporation, Thousand Oaks, CA; Honeywell International Inc., Minneapolis, MN; Johns Hopkins University Applied Physics Laboratory, Laurel, MD; Lucent Technologies Inc., McLeansville, NY; Mayo Clinic Rochester, Rochester, NY; Motorola, Schaumburg, IL; RAE, Inc., Arlington, VA; Syracuse Research Corporation, Syracuse, NY; and Veridian Corporation, Arlington, VA. The fourteen parties formed a consortium called the ''Chemical, Biological, and Radiological Technology Alliance'' (''CBRTA''). The purpose of the CBRTA is to develop technologies that will provide detection, identification, and warning systems for defense against chemical, biological, and radiological

attacks. The CBRTA is performing the technology development under Government R&D Contract No. NMA401–02–9–2002, awarded by the U.S. Department of Defense's National Imagery and Mapping Agency (NIMA) to the CBRTA.

Constance K. Robinson,

Director of Operations, Antitrust Division.

[FR Doc. 02–16221 Filed 6–26–02; 8:45 am]

BILLING CODE 4410–11–M

DEPARTMENT OF JUSTICE

Antitrust Division

Notice Pursuant to the National Cooperative Research and Production Act of 1993—J Consortium, Inc.

Notice is hereby given that, on May 30, 2002, pursuant to section 6(a) of the National Cooperative Research and Production Act of 1993, 15 U.S.C. 4301 *et seq.* (''the Act''), J. Consortium, Inc. has filed written notifications simultaneously with the Attorney General and the Federal Trade Commission disclosing changes in its membership status. The notifications were filed for the purposes of extending the Act's provisions limiting the recovery of antitrust plaintiffs to actual damages under specified circumstances. Specifically. S. Jayaraman (individual member), Saratoga, CA; Andrei Netchitaliouk (individual member), Sunnyvale, CA; Leung Nim Ho Rickey (individual member), Clearwater Bay, Hong Kong-China; Charathram Ranganathan (individual member), Santa Clara, CA; and Yomie Chan (individual member), Clearwater Bay, Hong Kong-China have been added as parties to this venture.

No other changes have been made in either the membership or planned activity of the group research project. Membership in this group research project remains open, and J. Consortium, Inc. intends to file additional written notification disclosing all changes in membership.

On August 6, 1999, J. Consortium, Inc. filed its original notification pursuant to section 6(a) of the Act. The Department of Justice published a notice in the **Federal Register** pursuant to section 6(b) of the Act on March 21, 2000 (65 FR 15175).

The last notification was filed with the Department on January 30, 2002. A notice was published in the **Federal Register** pursuant to section 6(b) of the Act on March 8, 2002 (67 FR 10760).

Constance K. Robinson,

Director of Operations, Antitrust Division.

[FR Doc. 02–16220 Filed 6–26–02; 8:45 am]

BILLING CODE 4410–11–M

DEPARTMENT OF JUSTICE

Antitrust Division

Notice Pursuant to the National Cooperative Research and Production Act of 1993—PKI Forum, Inc.

Notice is hereby given that, on June 10, 2002, pursuant to section 6(a) of the National Cooperative Research and Production Act of 1993, 15 U.S.C. 4301 *et seq.* (''the Act''), PKI Forum, Inc. has filed written notifications simultaneously with the Attorney General and the Federal Trade Commission disclosing changes in its membership status. The notifications were filed for the purpose of extending the Act's provisions limiting the recovery of antitrust plaintiffs to actual damages under specified circumstances. Specifically, 724 Solutions, Toronto, Ontario, Canada; Aladdin Knowledge Systems Ltd., Tel Aviv, Israel; Andes Networks, Inc., Mountain View, CA; Authentica, Inc., Waltham, MA; CardBase Technologies Limited, Dun Laoghaire, Dublin, Ireland; Cisco Systems, San Jose, CA; Cylink Corporation, Santa Clara, CA; Diversinet Corporation, Toronto, Ontario, Canada; Enterasys Networks, Andover, MA; Fannie Mae, Washington, DC; GlobalSign SA/NV, Brussels, Belgium; Litronic Inc., Irvine, CA; Nortel Networks Corporation, Kanata, Ontario, Canada; Pricewaterhouse Coopers LLP, McLean, VA; Secude GmbH, Darmstadt, Germany; and Sonera SmartTrust AB, Stockholm, Sweden have been dropped as parties to this venture.

No other changes have been made in either the membership or planned activity of the group research project. Membership in this group research project remains open, and PKI Forum, Inc. intends to file additional written notification disclosing all changes in membership.

On April 2, 2001, PKI Forum, Inc. filed its original notification pursuant to section 6(a) of the Act. The Department of Justice published a notice in the **Federal Register** pursuant to section 6(b) of the Act on May 3, 2001 (66 FR 22260).

The last notification was filed with the Department on March 13, 2002. A notice was published in the **Federal Register** pursuant to section 6(b) of the Act on April 22, 2002 (67 FR 19588).

Constance K. Robinson,

Director of Operations, Antitrust Division.

[FR Doc. 02–16222 Filed 6–26–02; 8:45 am]

BILLING CODE 4410–11–M

DEPARTMENT OF JUSTICE

Antitrust Division

Notice Pursuant to the National Cooperative Research and Production Act of 1993—Wireless Application Protocol Forum, Ltd.

Notice is hereby given that, on May 3, 2002, pursuant to section 6(a) of the National Cooperative Research and Production Act of 1993, 15 U.S.C. 4301 *et seq.* (''the Act''), Wireless Application Protocol Forum, Ltd. (''WAP'') has filed written notifications simultaneously with the Attorney General and the Federal Trade Commission disclosing changes in its membership status. The notifications were filed for the purpose of extending the Act's provisions limiting the recovery of antitrust plaintiffs to actual damages under specified circumstances. Specifically, Aplix Corporation, Tokyo, Japan; CoCoNet AG, Erkrath, Germany; Sky Think Corporation Co., LTD., Osaka, Japan; and The Walt Disney Company Limited, London, United Kingdom, have been added as parties to this venture. Telphia, Inc., San Francisco, CA has acquired Mspect Inc., Sunnyvale, CA. Telefonica Mobiles, Madrid, Spain has acquired Terra Mobile, Madrid, Spain. Diversinet Corporation, Toronto, Ontario, Canada has changed its name to Diversinet Corp. Ericsson Mobile, Research Triangle Park, NC has changed its name to Ericsson Radio Systems AB. Sony International, Stockholm, Sweden has changed its name to Sony Ericsson Mobile Communications. UBS AB, Postfach, Switzerland has changed its name to UBS AG.

The following companies had their memberships cancelled: 724 Solutions, Inc., Toronto, Ontario, Canada; Accenture, Chicago, IL; Air-Go Technologies Corp., San Francisco, CA; Algorithmic Research, Petach-Tikva, Israel; Amdocs Ltd., Ra'anana, Israel; Arthur Anderson LLP, Atlanta, GA; Bull CP8, Louveciennes, France; CacheFlow, Inc., Tokyo, Japan; CellPoint Systems AB, Sollentua, Sweden; Conduit Software, Dublin, Ireland; Critical Path, San Francisco, CA; Dialogue Communications Limited, Sheffield, South Yorkshire, United Kingdom; Digital Boardwalk, Inc., Santa Monica, CA; earthport plc, London, United

Kingdom; EC-Gate NV, Toronto, Ontario, Canada; EdgeMatrix Pte Ltd., Singapore, Singapore; Emblaze Systems Ltd., Givataim, Israel; Enition Incorporated, Santa Clara, CA; Equifax, Atlanta, GA; Excite@Home, Redwood City, CA; Extensity, Inc., Emeryville, CA; Fidelity Investments, Boston, MA; Finetix Limited, London, United Kingdom; iConverse, Waltham, MA; Inktomi Corporation, Foster City, CA; LG Electronics Inc., Seoul, Republic of Korea; LG TeleCom, Ltd., Seoul, Republic of Korea; Lightbridge, Inc., Burlington, MA; Logical Design Solutions, Inc., Morristown, NJ; Macromedia, San Francisco, CA; Micropole, Nanterre, France; MobiApps, Inc., McLean, VA; MobileWay, Puteauz, France; MTI, Ltd., Tokyo, Japan; Netegrity Inc., Waltham, MA; Netfish Technologies, Inc., Santa Clara, CA; Netlife AG, Hamburg, Germany; Netonomy, Paris, France; NextCom K.K., Tokyo, Japan; Nextron, Inc., San Jose, CA; Northstream AB, Solna, Sweden; Omnitel Pronto Italia, Milan, Italy; OnMobile Systems, Inc., Fremont, CA; Orsus Solution Ltd., Or yuhuda, Israel; PacketVideo Corporation, San Diego, CA; Proteus, Inc., Washington, DC; Ripcord Systems, Inc., London, United Kingdom; @Road, Inc., Fremont, CA; Sanoma-WSOY Oyj, Helsinki, Finland; Sanyo Electric Co., Ltd., Osaky, Japan; SecureSoft Inc., Seoul, Republic of Korea; Sinotone Datacom Ltd., Hong Kong, Hong Kong-China; SkyGo.com, Redwood City, CA; Smart421, Welwyn Garden City, Herts, United Kingdom; Synapta, Palo Alto, CA; Synovial Inc., Fremont, CA; TD Waterhouse Group, Inc., New York, NY; Telemig Celular Participacoes S.A., Brasilia, Brazil; Telephia, Inc., San Francisco, CA; Telocity, Inc., Cupertino, CA; Tibco Softwares Inc., Palo Alto, CA; Unisys Corporation, London, United Kingdom; Vettro Corporation, New York, NY; Vitria Technology, Inc., Sunnyvale, CA; Wiral Ltd., Espoo, Finland; Wmode, Inc., Calgary, Alberta, Canada; Wysdom, Richmond Hill, Ontario, Canada; and YacCom, Chantepie, France.

The following companies have resigned: ACE*COMM Corporation, Gaithersburg, MD; Add2Phone Ltd., Helsinki, Finland; Appolis AG, Munich, Germany; Arcot Systems, Inc., Santa Clara, CA; Blue Martini Sofeware, San Mateo, CA; Brightpoint, Inc., Indianapolis, IN; Business Objects SA, Levalois Perret, France; Casio Soft Co., Ltd., Tokyo, Japan; Convergys, Cincinnati, OH; Dolphin Telecommunications, Basingstake, Hants, United Kingdom; EncrypTix, Inc., El Segundo, CA; Europay International, Waterloo, Belgium; Everypath, San Jose, CA; Geoworks Corporation, Alameda, CA; Go2 Systems, Inc., Irvine, CA; ICL, Helsinki, Finland; iDini Corporation, San Jose, CA; Impronta Communications, S.L., Madrid, Spain; Inventec Electronics (Shanghai) Co., Ltd., Shanghai, People's Republic of China; J-Phone East Co., Ltd., Tokyo, Japan; Mobilocity, Inc., New York, NY; NetManage, Inc., Cupertino, CA; Nocom AB, Uppsala, Sweden; OneName Corporation, Seattle, WA; OpenGrid, Inc., San Jose, CA; Opt(e)way, Paris France; ParaRede Technologies Ltd., Lisboa, Portugal; Purple Technologies Ltd., London, United Kingdom; Real Names Corp., Redwood City, CA; room33AB, Stockholm, Sweden; RTSe, Espoo, Finland; Seagull, Dordrecht, The Netherlands; Sila Communications Ltd., London, United Kingdom; SkyTel Communications, Jackson, MS; Solid Information Technology, Ltd., Helsinki, Finland; Soprano Design Pty Ltd, North Sydney, New South Wales, Australia; space2go.com GmbH & Co., Berlin, Germany; Speedia, Llc., Brooklyn, NY; Swisscom AG, Berne, Switzerland; Tegaron Telematics GmbH, Bonn, Germany; Telsim Mobil Telekomunikayson, Istanbul, Turkey; The PhonePages of Sweden AB, Kista, Sweden; Ubizen, Leuven, Belgium; Vignetter Corporation, Austin, TX; Webtiss Technologies, Paris, France; WIPRO Technologies-Global R & D Bangalore, India; WorldCom, Clinton, MS; worldzap, Zug, Switzerland; ZKEY.Com, Los Angeles, CA; and Zsigo Wireless Technologies, East Lansing, MI.

No other changes have been made in either the membership or planned activity of the group research project. Membership in this group research project remains open, and WAP intends to file additional written notifications disclosing all changes in membership.

On March 18, 1998, WAP filed its original notification pursuant to section 6(a) of the Act. The Department of Justice published a notice in the **Federal Register** pursuant to section 6(b) of the Act on December 31, 1998 (63 FR 72333).

The last notification was filed with the Department on January 28, 2002. A notice was published in the **Federal Register** pursuant to section 6(b) of the Act on April 4, 2002 (67 FR 16125).

Constance K. Robinson,

Director of Operations, Antitrust Division.

[FR Doc. 02–16219 Filed 6–26–02; 8:45 am]

BILLING CODE 4410–11–M

DEPARTMENT OF JUSTICE

Drug Enforcement Administration

Manufacturer of Controlled Substances; Notice of Registration

By Notice dated December 28, 2001, and published in the **Federal Register** on March 18, 2002, (67 FR 12049), Mallinckrodt, Inc., Mallinckrodt & Second Streets, St. Louis, Missouri 63147, made application by letter to the Drug Enforcement Administration (DEA) to be registered as a bulk manufacturer of the basic classes of controlled substances listed below:

Drug	Schedule
Codeine-N-oxide (9053)	I
Difenoxin (9168)	I
Morphine-N-oxide (9307)	I
Normorphine (9313)	I
Norlevorphanol (9634)	I
Benzoylecgonine (9180)	II

The firm plans to manufacture the controlled substances as analytical reference standards to be utilized internally and for sale to other companies.

No comments or objections were received. DEA has considered the factors in Title 21, United States Code, Section 823(a) and determined that the registration of Mallinckrodt, Inc. to manufacture listed controlled substances is consistent with the public interest at this time. DEA has investigated Mallainckrodt, Inc. on a regular basis to ensure that the company's continued registration is consistent with the public interest. These investigations have included inspection and testing of the company's physical security systems, verification of the company's compliance with state and local laws, and a review of the company's background and history. Therefore, pursuant to 21 U.S.C. 823 and 28 CFR 0.100 and 0.104, the Deputy Assistant Administrator, Office of Diversion Control, hereby orders that the application submitted by the above firm for registration as a bulk manufacturer of the basic classes of the controlled substances listed above is granted.

Dated: June 14, 2002.

Laura M. Nagel,

Deputy Assistant Administrator, Office of Diversion Control, Drug Enforcement Administration.

[FR Doc. 02–16287 Filed 6–26–02; 8:45 am]

BILLING CODE 4410–09–M

DEPARTMENT OF JUSTICE

Drug Enforcement Administration

Importation of Controlled Substances; Notice of Withdrawal of Application

As set forth in the **Federal Register** (FR Doc. 01–8551) Vol. 66, No. 67 at page 18309, dated March 29, 2001, Chirex Technology Center, Inc., DBA Chirex Cauldron, which has changed its name to Rhodia Chirex America, 383 Phoenixville Pike, Malvern, Pennsylvania 19355, made application by renewal to the Drug Enforcement Administration (DEA) to be registered as an importer of phenylacetone (8501), a basic class of controlled substance listed in Schedule II.

By letter dated May 30, 2002, Rhodia Chirex America requested that their application to import phenylacetone be withdrawn. Therefore, Rhodia Chirex America's application to import phenylacetone is hereby withdrawn.

Dated: June 14, 2002.

Laura M. Nagel,

Deputy Assistant Administrator, Office of Diversion Control, Drug Enforcement Administration.

[FR Doc. 02–16286 Filed 6–26–02; 8:45 am]

BILLING CODE 4410–09–M

DEPARTMENT OF LABOR

Occupational Safety and Health Administration

[Docket No. ICR–1218–0218(2002)

Hydrostatic Testing Provision of the Portable Fire Extinguishers Standard; Extension of the Office of Management and Budget's Approval of Information-Collection (Paperwork) Requirements

AGENCY: Occupational Safety and Health Administration (OSHA), Labor.

ACTION: Request for comment.

SUMMARY: OSHA requests comment concerning its proposed extension of the information-collection requirement specified by the hydrostatic testing provision of the Portable Fire Extinguishers Standard (29 CFR 1910.157). The paperwork provision of the hydrostatic testing provision specifies requirements for developing and maintaining certification records to demonstrate that portable fire extinguishers have been tested in accordance with and at intervals specified by the Standard (29 CFR 1910.157(f)(16)). The purpose of the records requirement is to reduce employees' risk of death or serious injury by ensuring that portable fire extinguishers are in operating condition.

DATES: Submit written comments on or before August 26, 2002.

ADDRESSES: Submit written comments to the Docket Office, Docket No. ICR–1218–0218(2002), OSHA, U.S. Department of Labor, Room N–2625, 200 Constitution Avenue, NW., Washington, DC 20210; telephone (202) 693–2350. Commenters may transmit written comments of 10 pages or less by facsimile to (202) 693–1648.

FOR FURTHER INFORMATION CONTACT: Theda Kenney, Directorate of Safety Standards Programs, OSHA, U.S. Department of Labor, Room N–3609, 200 Constitution Avenue, NW., Washington, DC 20210; telephone (202) 693–2222. A copy of the Agency's Information-Collection Request (ICR) supporting the need for the information collection specified by the Portable Fire Extinguishers Standard is available for inspection and copying in the Docket Office, or by requesting a copy from Theda Kenney at (202) 693–2222, or Todd Owen at (202) 693–2444. For electronic copies of the ICR, contact OSHA on the Internet at *http://www.osha.gov* and select "*Information Collection Requests.*"

SUPPLEMENTARY INFORMATION:

I. Background

The Department of Labor, as part of its continuing effort to reduce paperwork and respondent (i.e., employer) burden, conducts a preclearance consultation program to provide the public with an opportunity to comment on proposed and continuing information-collection requirements in accordance with the Paperwork Reduction Act of 1995 (PRA–95) (44 U.S.C. 3506(c)(2)(A)). This program ensures that information is in the desired format, reporting burden (time and cost) is minimal, collection instruments are understandable, and OSHA's estimate of the information-collection burden is correct.

The following section describes who uses the information on the hydrostatic testing of portable fire extinguishers that is collected under the records requirement (29 CFR 1910.157(f)(16)), as well as how they use it. The purpose of the requirement is to reduce employees' risk of death or serious injury by ensuring that portable fire extinguishers are in safe operating condition.

Test records (paragraph (f)(16)). Paragraph (f)(16) of the Standard requires employers to develop and maintain a certification record of hydrostatic testing of portable fire extinguishers. The certification record must include the date of inspection, the signature of the person who performed the test, and the serial number (or other identifier) to the fire extinguisher that was tested. The certification record must be made available to the Assistant Secretary or his/her representative upon request. The certification records provide assurance to employers, employees, and OSHA compliance officers that the fire extinguishers have been hydrostatically tested in accordance with and at the intervals specified in the Standard, thereby ensuring that they will operate properly in the event employees need to use them. These records also provide the most efficient means for the compliance officers to determine that an employer is complying with the Standard.

II. Special Issues for Comment

OSHA has a particular interest in comments on the following issues:

- Whether the proposed information-collection requirements are necessary for the proper performance of the Agency's functions, including whether the information is useful;
- The accuracy of OSHA's estimate of the burden (time and costs) of the information-collection requirements, including the validity of the methodology and assumptions used;
- The quality, utility, and clarity of the information collected; and
- Ways to minimize the burden on employers who must comply; for example, by using automated or other technological information-collection and -transmission techniques.

III. Proposed Action

OSHA proposes to extend the Office of Management and Budget's (OMB) approval of the collection-of-information requirements specified by the hydrostatic testing provision of the Portable Fire Extinguishers Standard. The Agency will summarize the comments submitted in response to this notice, and will include this summary in its request to OMB to extend the approval of these information-collection requirements.

Type of Review: Extension of a currently approved information-collection requirement.

Title: Hydrostatic Testing Provision of the Portable Fire Extinguishers (Certification Record) (29 CFR 1910.157).

OMB Number: 1218–0218.

Affected Public: Business or other for-profit; not-for-profit institutions; Federal government; State, local, or tribal governments.

Number of Respondents: 8,780,500.

Frequency of Recordkeeping: Varies from 5 to 12 years.

Average Time per Response: Varies from 2 (.03 hour) to 35 minutes (.58 hour).

Total Annual Hours Requested: 131,708.

Total Annual Costs (O&M): $11,941,480.

IV. Authority and Signature

John L. Henshaw, Assistant Secretary of Labor for Occupational Safety and Health, directed the preparation of this notice. The authority for this notice is the Paperwork Reduction Act of 1995 (44 U.S.C. 3506), and Secretary of Labor's Order No. 3–2000 (65 FR 50017).

Signed at Washington, DC on June 21, 2002.

John L. Henshaw,

Assistant Secretary of Labor.

[FR Doc. 02–16262 Filed 6–26–02; 8:45 am]

BILLING CODE 4510–26–M

DEPARTMENT OF LABOR

Occupational Safety and Health Administration

[Docket No. ICR–1218–0229(2002)]

Standard on Mechanical Power Presses; Extension of the Office of Management and Budget's Approval of Information-Collection (Paperwork) Requirements

AGENCY: Occupational Safety and Health Administration (OSHA), Labor.

ACTION: Request for comment.

SUMMARY: OSHA request comment concerning its proposed extension of the information-collection requirements contained in the Standard on Mechanical Power Presses (29 CFR 1910.217). The paperwork provisions of the Standard specify requirements for developing and maintaining records to certify that employers are inspecting presses as required by the Standard. The purpose of these requirements is to reduce employees' risk of death or serious injury by ensuring that employers maintain the mechanical power presses used by the employees in safe operating condition.

DATES: Submit written comments on or before August 26, 2002.

ADDRESSES: Submit written comments to the Docket Office, Docket No. ICR–1218–0229(2002), OSHA, U.S. Department of Labor, Room N–2625, 200 Constitution Avenue, NW., Washington, DC 20210; telephone (202) 693–2350. Commenters may transmit written comments of 10 pages or less by facsimile to (202) 693–1648.

FOR FURTHER INFORMATION CONTACT: Theda Kenney, Directorate of Safety Standards Programs, OSHA, U.S. Department of Labor, Room N–3609–200 Constitution Avenue, NW., Washington, DC 20210; telephone (202) 693–2222. A copy of the Agency's Information-Collection Request (ICR) supporting the need for the information collections specified in the Standard on Mechanical Power Presses is available for inspection and copying in the Docket Office, or by requesting a copy from Theda Kenney at (202) 693–2222 or Todd Owen at (202) 693–2444. For electronic copies of the ICR, contact OSHA on the Internet at *http://www.osha.gov* and select ''*Information Collection Requests.*''

SUPPLEMENTARY INFORMATION:

1. Background

The Department of Labor, as part of its continuing effort to reduce paperwork and respondent (i.e., employer) burden, conducts a preclearance consultation program to provide the public with an opportunity to comment on proposed and continuing information-collection requirements in accordance with the Paperwork Reduction Act of 1995 (PRA–95) (44 U.S.C. 3506(c)(2)(A)). This program ensures that information is in the desired format, reporting burden (time and costs) is minimal, collection instruments are clearly understandable, and OSHA's estimate of the information-collection burden is correct.

The Mechanical Power Presses Standard specifies two paperwork requirements. The following paragraphs describe who uses the information collected under each requirement, as well as how they use it. The purpose of these requirements is to reduce employees' risk of death or serious injury by ensuring that employers maintain the mechanical power presses used by the employees in safe operating condition. (Based on previous ICR approvals by OMB, OSHA determined that the training requirement in paragraph (f)(2) of the Standard is not a collection of information under the Paperwork Reduction Act of 1995.)

- Paragraph (e)(1)(i) requires employers to establish and follow a program of periodic and regular inspections of power presses to ensure that all their parts, auxiliary equipment, and safeguards are in safe operating condition and adjustment. Employers must maintain a certification record of inspections that includes the date of inspection, the signature of the person who performed the inspection, and the serial number, or other identifier, of the power press that was inspected.
- Paragraph (e)(1)(ii) requires employers to inspect and test each press no less than weekly to determine the condition of the clutch/brake mechanism, antirepeat feature, and single-stroke mechanism. Employers must perform and complete necessary maintenance or repair or both before the press is operated. In addition, employers must maintain a record of inspections, tests, and maintenance work. The record must include the date of the date of the inspection, test, or maintenance; the signature of the person who performed the inspection; and the serial number, or other identifier, of the press that was inspected, tested, or maintained.

The certification records required in 29 CFR 1910.217(e)(1)(i) and (e)(1)(ii) are necessary to ensure compliance with the requirement to inspect mechanical power presses. The inspection of mechanical power presses is critical to ensuring that employers maintain the presses in safe operating condition for employees. These records also provide the most efficient means for the compliance officers to determine that an employer is complying with the Standard.

II. Special Issues for Comment

OSHA has a particular interest in comments on the following issues:

- Whether the proposed information-collection are necessary for the proper performance of the Agency's functions, including whether the information is useful;
- The accuracy of OSHA's estimate of the burden (time and costs) of the information-collection requirements, including the validity of the methodology and assumptions used;
- The quality, utility, and clarity of the information collected; and
- Ways to minimize the burden on employers who must comply; for example, by using automated or other technological information-collection and -transmission techniques.

III. Proposed Actions

OSHA proposes to extend the Office of Management and Budget's (OMB) approval of the collection-of-information requirements specified in the Standard on Mechanical Power Presses (29 CFR 1910.217). OSHA will summarize the comments submitted in response to this notice, and will include this summary in its request to OMB to extend the approval of these information-collection requirements.

Type of Review: Extension of a currently approved information-collection requirement.

Title: Mechanical Power Presses (29 CFR 1910.217).

OMB Number: 1218–0229.

Affected Public: Business or other for-profit; not-for-profit institutions; Federal government; State, local, or tribal governments.

Number of Respondents: 191,750 (assuming one mechanical power press per employer).

Frequency of Recordkeeping: On occasion.

Average Time per Response: Varies from 5 minutes (.08 hour) to 20 minutes (.33 hour).

Total Annual Hours Requested: 1,372,930.

IV. Authority and Signature

John L. Henshaw, Assistant Secretary of Labor for Occupational Safety and Health, directed the preparation of this notice. The authority for this notice is the Paperwork Reduction Act of 1995 (44 U.S.C. 3506) and Secretary of Labor's Order No. 3–2000 (65 FR 50017).

Signed at Washington, DC, on June 21st, 2002.

John L. Henshaw,

Assistant Secretary of Labor.

[FR Doc. 02–16263 Filed 6–26–02; 8:45 am]

BILLING CODE 4510–26–M

MERIT SYSTEMS PROTECTION BOARD

[MSPB Docket No. DA–3443–00–0217–I–1]

Opportunity to File Amicus Briefs in *Kevdin D. Abrahamsen* v. *Department of Veterans Affairs*

AGENCY: Merit Systems Protection Board.

ACTION: The Merit Systems Protection Board is providing interested parties with an opportunity to submit *amicus* briefs in the above referenced appeal. The issues to be addressed in such briefs are set forth in the Board's June 18, 2002, Order, which is reprinted in its entirety in the Summary below.

SUMMARY:

Order

The agency issued a vacancy announcement in which it solicited applications to fill several positions as a Veterans Service Representative, GS–0996–07 with promotion potential to the GS–10 grade, in various agency offices, including four positions to be filled in the agency's Muskogee, Oklahoma office, IAF, Tab 4, Subtab 4a. The vacancy announcement stated that applicants would be evaluated on the basis of the application package submitted, rated on the quality and extent of their total accomplishments, experience, and/or education, and ranked on the basis of the degree to which each candidate's background matched the skills and ability requirements identified for the position. *Id.* The vacancy announcement further provided that individuals could apply for these positions if they met the criteria for one of the following recruitment categories: (1) Outstanding Scholars; (2) Veterans Readjustment Act (VRA) eligibles; (3) 30% or more disabled veterans; (4) Preference eligibles and veterans separated after 3 or more years of continuous active service; (5) Chapter 31 veterans; (6) Handicapped eligibles; and (7) VA CTAP or Interagency CTAP eligibles. *Id.*

The appellant submitted an application for the vacancies in the Muskogee office and attached a letter from the agency certifying his status as a 30% or more disabled veteran. *Id.*, Subtab 4b. After the vacancy announcement closed, the agency's Human Resources Center provided the selecting official with several memoranda, each of which related to a specific recruitment category listed in the vacancy announcement, listing the candidates who were eligible for consideration under the corresponding recruitment category. *Id.* Subtab 4c. The memoranda listed the candidates in alphabetical order by last name, and there is no indication that the candidates were rated or ranked. The agency included the appellant's name on a memorandum of VRA eligibles. On June 1, 1999, the selecting official noted his selections on the memoranda and returned them to the Human Resources Center. Each of the selected candidates had been included on the memorandum corresponding to the Outstanding Scholar program, although one of the selectees also had been included on the memorandum of VRA eligibles. By letter dated June 4, 1999, the agency notified the appellant that he had not been selected. IAF, Tab 4, Subtab 4d.

On November 12, 1999, the appellant wrote the agency requesting further information regarding his nonselection.[1] In its response, the agency asserted that applications were accepted from special categories of applicants, as authorized by the Office of Personnel Management (OPM), and that veterans' preference was applied within each of these special groups as required by law. IAF, Tab 1. The appellant filed a complaint with the Department of Labor's Veterans' Employment and Training Service (VETS) concerning his non-selection,[2] and, by letter dated January 7, 2000, VETS notified the appellant that it was closing his case, ''indicating no merit.'' *Id.*

On January 25, 2000, the appellant filed an appeal under the Veterans Employment Opportunities Act (VEOA), 5 U.S.C. 3330a, in which he claimed that the agency violated his veterans' preference rights. IAF, Tab 1. Specifically, the appellant claimed that the agency misapplied the Outstanding Scholar program when it selected the four candidates that appeared on the Outstanding Scholar program memorandum because the agency's use of this program ''as a primary tool and not as a supplement did not allow the full entitlement of veterans preference when the selections were made.'' *Id.* The administrative judge issued an acknowledgement order requiring the appellant to submit evidence and argument to show that the agency violated his rights under a specific statute or regulation relating to veterans' preference. IAF, Tab 2. In his response to this order, the appellant alleged that the agency violated 5 U.S.C. 2302(b)(1), (b)(11)(A) and (B), and (b)(12), as well as 38 U.S.C. 4214(a)(1). IAF, Tab 3. In its response to the appeal, the agency argued that veterans' preference does not apply to appointment made under the Outstanding Scholar program and that the Board lacks jurisdiction over any allegation that the agency abused or misused the program. IAF, Tab 4.

On March 22, 2000, the administrative judge issued an initial decision dismissing the appeal for lack of jurisdiction, finding that the appellant failed to meet his burden of proof on the issue of jurisdiction. Initial Decision (ID) at 4–5; *see* 5 CFR 1201.56(a)(2)(1). The administrative judge found that the Outstanding Scholar program hiring authority permitted the agency to hire individuals without regard to veterans' preference and stated that the appellant failed to identify a specific statute or regulation relating to his veterans' preference rights which the agency violate when it used the Outstanding Scholar hiring authority as a basis for its selections. ID at 4–5. The appellant has filed a timely petition for review in which he states that the Outstanding Scholar program is outside the Board's jurisdiction but argues that the administrative judge erred in concluding that the agency did not violate his veterans' preference rights under 38 U.S.C. 4214(a)(1). Petition for Review File (PFRF), Tab 1. The agency has filed a response in which it argues that 38 U.S.C. 4214(a)(1) is not a statute relating to veterans' preference. PFRF, Tab 3.

The Board has previously discussed the issue presented by this case in *Augustine* v. *Department of Veterans Affairs,* 88 M.S.P.R. 407 (2001). In *Augustine,* the Board found that the Veterans Service Representative position is a competitive service position, and it discussed the means by which veterans' preference is applied in the competitive examining process. *Augustine,* 88 M.S.P.R. 407, ¶¶ 8, 10–11. In order to qualify for an appointment to a competitive service position, an applicant must pass an examination or be specifically excepted from examination under section 3302 of title 5, United States Code. 5 U.S.C. 3304(b). In this case, there is no indication that any of the candidates the agency referred to the selecting official passed an examination for the Veterans Service Representative position.[3] However, when the competitive examining process is used to fill vacancies for competitive service positions other than scientific and professional positions in the grades of GS–09 or higher, disabled veterans who have a compensable service-connected disability of 10 percent or more, such as the appellant, are entered onto registers and referred on certificates of eligibles in order of their ratings ahead of all remaining applicants. 5 U.S.C. 3313(2), 3317(a). Furthermore, the appointing authority is required to select for appointment to each vacancy from the highest three eligibles available for appointment on the certificate of eligibles provided by the examining authority. 5 U.S.C. 3318(a). If the appointing authority proposes to pass over a preference eligible on a certificate in order to select an individual who is not preference eligible, the appointing authority must file written reasons for the pass over with OPM and obtain OPM's approval. 5 U.S.C. 3318(b)(1). In the case of a preference eligible veteran with a service-connected disability of 30% or ore, such as the appellant, the veteran is entitled to notice of the proposed pass over and an opportunity to respond to OPM. 5 U.S.C. 3318(b)(2).

It appears that only one of the candidates the agency selected was a veteran, and there is no indication that any of the selected candidates were preference eligible.[4] Thus, had the agency used competitive examining procedures to fill the positions at issue in this case, the appellant, as a preference eligible veteran with a service-connected disability of 10 percent or more, would have been ranked ahead of at least three of the candidates the agency selected, and the agency could not have selected any of these three candidates without obtaining OPM's approval to pass over the appellant. As the Board pointed out in *Augustine,* however, OPM's official guidance concerning the Outstanding Scholar program states:

> Under the terms of the *Luevano* [v. *Campbell,* 93 F.R.D. 68 (D.D.C. 1981)] consent decree the Outstanding Scholar program was established as a supplement to the competitive examining process where under-representation of Blacks and Hispanics exists. This authority was not intended to replace competitive examining, nor to become the primary method of hiring. This authority allows agencies to appoint Outstanding Scholars [meeting specified college grade-point or class standing criteria] as an exception to normal competitive procedures, that is, the rule of three [5 U.S.C. 3318(a)] and veterans' preference [5 U.S.C. 3318(b)] do not apply.

Office of Personnel Management, *Delegated Examining Operations Handbook,* § 2.8(A). Therefore, by considering the selected candidates under the non-competitive Outstanding Scholar program, the agency deprived the appellant of a significant advantage he would have had over these candidates if the agency had used competitive examining procedures.

While an agency generally has the discretion to fill a vacancy through any authorized method, *see Sherwood* v. *Department of Veterans Affairs,* 88 M.S.P.R. 208, ¶ 10 (2001), the record does not establish that the agency was authorized to use the Outstanding Scholar program in this case. The *Delegated Examining Operations Handbook* lists the criteria that positions must meet before they are covered under the *Luevano* consent decree:

> There are two additional limitations on the types of occupations for which agencies can examine:
>
> *1. Positions Covered Under the Luevano Consent Decree (formerly called Administrative Careers With America—ACWA) Defined.* The series and job titles covered under the *Luevano* Consent Decree are listed in Appendix B. In addition to the series being one of those listed in the Appendix, a covered position must also meet ALL of the following criteria:
>
> (a) it is being filled at either GS–5 or GS–7;
>
> (b) it is classified at 2-grade intervals; and
>
> (c) it must have promotion potential to GS–9, or higher.
>
> Agencies are reminded that the *Luevano* consent decree required the establishment and application of an approved rating procedure for entry into these covered positions. OPM continues to administer an approved examining instrument on a case-by-case basis; alternatively, OPM will administer the written test developed for the *Luevano* positions for an agency, upon request. When using the approved rating instrument, the specialized qualification questions can be modified, but the rating questions cannot be changed. Agencies that wish to consider developing an alternative examining instrument must obtain approval from the Department of Justice and the plaintiffs prior to implementation. Agencies should also be aware that there are data collection and reporting requirements that go along with examining for *Luevano* positions.
>
> The Outstanding Scholar provision of the *Luevano* decree is still available as a supplement to a formal competitive examination.

Id., § 1.2(B) (emphasis in the original).

It appears that the positions at issue in this case meet most of the *Luevano* criteria identified in the OPM handbook. The 0996 classification series is identified in Appendix B of the handbook, and the vacancy announcement indicated that the positions were being filled at the grade of GS–7 with promotion potential to the GS–10 grade. However, the job title identified in Appendix B of the OPM handbook for the 0996 classification series is ''Veterans Claims Examining,'' while the job title of the advertised positions in this case was ''Veterans Service Representative.'' In addition, it is unclear whether the position of ''Veterans Service Representative'' is classified in 2-grade intervals. Therefore, to the extent that the agency relied on authority delegated from OPM to appoint Outstanding Scholar program candidates to positions covered by the *Luevano* consent decree, the record, as it currently stands, does not establish that the positions at issue were covered by that decree.

Furthermore, even if the positions were covered by the *Luevano* consent decree, the record does not show that the agency's use of the Outstanding Scholar program in this case was consistent with OPM's requirement that the program be invoked ''as a supplement to the competitive examining process where the under-representation of Blacks and Hispanics exists.'' *Delegated Examining Operations Handbook,* § 2.8(A); *see Augustine,* 88 M.S.P.R. 407, ¶ 18. As mentioned previously, the record does not indicate that the agency conducted a competitive examination before selecting the four individuals to fill the vacancies at issue in this case. If it had, preference eligible candidates who should have taken and passed the competitive examination presumably would have been afforded their veterans' preference rights, at least with respect to the positions filled through the competitive examining process. Furthermore, the record contains no evidence to support the proposition that the agency invoked the Outstanding

Scholar appointing authority in this case to ameliorate ''under-representation of Blacks and Hispanics.'' *See Augustine,* 88 M.S.P.R. 407, ¶ 18.

With respect to the three selectees who were not included on the VRA memoranda, the agency has not identified any authority, other than the Outstanding Scholar program, that would have allowed these candidates to be appointed to the positions for which they were selected without passing an examination. Therefore, if the agency was not authorized to use the Outstanding Scholar hiring authority in this case, it could not have properly hired these candidates without conducting an examination. 5 U.S.C. 3304(b) (''An individual may be appointed in the competitive service only if he has passed an examination or is specifically excepted from examination under section 3302 of this title.''). In addition, because at least 36 applicants applied for the four vacancies, it appears that any examination the agency may have administered should have been an open, competitive examination in which the appellant and other preference eligible candidates would have had the opportunity to compete with the selected candidates. 5 U.S.C. 3304(a)(1). Following such an examination, the agency would have been required to augment the ratings of any preference eligible candidates who passed the examination by the appropriate number of veterans' preference points. 5 U.S.C. 3309. In addition, if the appellant had taken and passed the examination, his name would have been entered ahead of the names of any of the candidates who were not disabled veterans with a compensable service-connected disability of 10 percent or more, and the agency would have had to obtain OPM's approval to pass over the appellant to select any of the candidates it actually selected who did not qualify for a non-competitive appointment under some other statutory or regulatory authority. 5 U.S.C. 3313(2), 3318(a), (b).

Accordingly, the agency's use of the Outstanding Scholar hiring authority essentially precluded the appellant from exercising any veterans' preference rights he may have had in relation to the Outstanding Scholar candidates. Because the record as it currently stands, does not establish that the agency was properly authorized to use the Outstanding Scholar program when it filled the vacancies at issue in this appeal, we ORDER the agency to show cause why the Board should not find that the agency's use of the Outstanding Scholar hiring authority violated the appellant's veterans' preference rights by allowing the agency to appoint non-preference eligible candidates without affording the appellant the opportunity to compete against these candidates and exercise the veterans' preference rights he would have been afforded in a competitive examining process.

Within 30 days of the date of this order, the agency shall submit evidence and argument which (1) identifies the rules governing the use of the Outstanding Scholar appointing method, both in general, and when, as in this case, a qualified individual with veterans' preference applies for a competitive service position; and (2) establishes that the agency's use of the Outstanding Scholar hiring authority in this case complied with the rules identified in (1). The appellant may respond to the agency's submission within 30 days of the date of the service of the agency's argument and evidence.

The Clerk is directed to cause this order to be printed in the **Federal Register**, and to advice any interested party that it may submit an *amicus* brief on the issues identified above, within 30 days of the date of publication. The notice shall instruct *amici* to file two copies of their briefs with the Clerk of the Board, and shall include instruction for service of briefs on the agency. The Clerk will serve copies of *amicus* briefs on the appellant.

The agency and the appellant may respond to any *amicus* briefs filed within 20 days from the latest date an *amicus* brief is served, but in any case no later than 60 days from the date of publication of the notice in the **Federal Register**.

[1] Although the record does not include a copy of the appellant's letter to the agency, the agency's response identified the date of the letter and briefly summarized its contents as a request for ''information regarding your nonselection as a 30 percent or greater disabled veteran for the position of Veterans Service Representative in our Veterans Service Center, at the Muskogee VA Regional Office.'' IAF, Tab 1.

[2] Because the record does not include a copy of the complaint the appellant filed with VETS, it is not clear when the appellant filed his complaint with the Department of Labor.

[3] OPM requires written and/or performance tests for positions at the grades of GS–05 and GS–07 in the 0996 occupational series. *Office of Personnel Management Operating Manual, Qualification Standards for General Schedule Positions,* § 5, *<http://www.opm.gov/qualifications/sec-v/sec-v.htm>.*

[4] As mentioned previously, one of the candidates selected appeared on the Outstanding Scholar program memorandum and the VRA memorandum. Persons qualified for a VRA appointment include veterans of the Vietnam era and veterans who first became a member of the Armed Forces or first entered on active duty as a member of the Armed Forces after May 7, 1975, and were discharged or released from active duty under conditions other than dishonorable. 38 U.S.C. 4214(b)(2). However, veterans who are eligible for VRA appointments are not necessarily preference eligible. Still, it is possible that this candidate was preference eligible. *See* 5 U.S.C. 2108(3)(A), (B), (C) (defining the veterans who are preference eligible).

[5] The names of 36 applicants appear on the 6 memoranda the agency Human Resources Center provided the selecting official. IAF, Tab 4, Subtab 4c. The first merit system principle states that ''[r]ecruitment should be from qualified individuals * * * after fair and open competition which assures that all receive equal opportunity,'' 5 U.S.C. 2301(b)(1), but the statute provides that the President may prescribe rules which shall provide for noncompetitive examinations when competent applicants do not compete after notice has been given of the existence of the vacancy. 5 U.S.C. 3304(a)(2).

DATES: All briefs in response to this notice shall be filed with the Clerk of the Board on or before July 29, 2002.

ADDRESSES: All briefs shall include the case name and docket number noted above (*Kevin D. Abrahamsen* v. *Department of Veterans Affairs,* MSPB Docket No. DA–3443–00–0217–I–1) and be entitled '' Amicus Brief,'' and shall be submitted in duplicate. Briefs shall be filed with the Office of the Clerk, Merit Systems Protection Board, 1615 M St., NW., Washington, DC 20419. Because of possible mail delays caused by the closure of the Brentwood Mail facility, respondents are encouraged to file with the Clerk by facsimile transmittal to (202) 653–7130. A copy of any *amicus* brief that is submitted must also be served on Stephanie R. Darr, Esq., Office of Regional Counsel, Department of Veterans Affairs, 125 South Main Street, Muskogee, OK 74401.

FOR FURTHER INFORMATION CONTACT: Shannon McCarthy, Deputy Clerk of the Board, or Matthew Shannon, Legal Counsel to the Clerk, at (202) 653–7200.

Dated: June 21, 2002.

Bentley M. Roberts, Jr.,

Clerk of the Board.

[FR Doc. 02–16208 Filed 6–26–02; 8:45 am]

BILLING CODE 7400–01–M

NATIONAL ARCHIVES AND RECORDS ADMINISTRATION

RIN 3095–ZA04

General Records Schedule 24, Information Technology Operations and Management Records; Request for Comments

AGENCY: National Archives and Records Administration.

ACTION: Notice of proposed records schedule; request for comments.

SUMMARY: As required by statute (44 U.S.C. 3303a(d)), the National Archives and Records Administration (NARA) issues General Records Schedules (GRS) to provide disposal authority for temporary administrative records common to several or all agencies of the Federal Government. The GRS include records relating to civilian personnel, fiscal accounting, procurement, communications, printing, and other common functions. NARA has developed a new General Records Schedule, Information Technology Operations and Management Records, to provide disposal authority for certain administrative records generated in or acquired by agency components responsible for developing and operating network infrastructure and systems.

NARA invites public comments on this proposed new general records schedule, as required by 44 U.S.C. 3303a(a). Because of the widespread interest in the management of electronic records, NARA is publishing the full text of the schedule with additional information on each item.

DATES: Comments must be received in writing on or before August 26, 2002.

ADDRESSES: Comments should be sent to Modern Records Programs (NWM), National Archives at College Park, 8601 Adelphi Road, College Park, MD 20740–6001, faxed to 301–837–3697 or 301–837–3698, or sent to the following Internet address: *records.mgt@nara.gov.*

FOR FURTHER INFORMATION CONTACT: Michael L. Miller, Director, Modern Records Programs, 301–837–1980.

SUPPLEMENTARY INFORMATION: In 1978, use of the GRS was made legally mandatory. A Federal agency must destroy records in accordance with the GRS to the greatest extent possible. If an agency wishes to apply a different retention period for any series of records included in the GRS, the records officer must submit a Standard Form (SF) 115 providing justification for the desired deviation.

Relationship of This Draft GRS to GRS 20, Electronic Records

This schedule does not duplicate or replace GRS 20, Electronic Records. The proposed new schedule addresses the administrative records generated by units responsible for technical management of IT resources. The functions covered by the proposed GRS 24 are comparable to the administrative functions relating to budgeting, contracting, human resources, and property management that are covered by other GRS. The proposed GRS 24 does not apply to system data or information content, which must be scheduled separately by submitting an SF 115, Request for Records Disposition Authority, to NARA.

GRS 20 remains in effect to cover the records described in that schedule. GRS 20 records include certain files associated with temporary data base management systems such as print files, extract files, source records, and certain disposable electronic records produced by end users in office automation applications. NARA will conduct a separate review concerning the continuation of GRS 20 disposition authorities as part of its comprehensive review of the policies and procedures for scheduling and appraisal of records in all formats.

Background—Development of This Draft GRS

In late 1997, the Archivist established an interagency Electronic Records Work Group to review General Records Schedule 20 and recommend revisions to that schedule or other practical solutions for the scheduling of electronic records. In 1998, the work group submitted its final report to the Archivist (*http://www.nara.gov/records/grs20/reprt914.html*) recommending, among other things, that NARA issue a new general records schedule for information technology operations and management records to supplement, not replace, GRS 20.

Building on the efforts of the Work Group, NARA drafted a new GRS for common administrative records relating to operation and management of information technology and related services. Federal agencies reviewed the draft in the summer of 1999. The draft, revised in response to agency comments, was discussed at a January 2000 focus group meeting with agency records management and information technology management officials. NARA made appropriate changes in response to comments made at the meeting and in June 2000 again requested comments from Federal agencies.

Overall, agencies found that the schedule draft they reviewed in 2000 generally fits their records and could be implemented without undue difficulty. In response to specific comments about terminology, apparent redundancies, and retention periods for some items, NARA consolidated some items and provided other clarifications to address the concerns. NARA believes the schedule is now at the appropriate level of detail. Given the agencies' interest in having more flexibility in applying disposition standards for temporary records, NARA eliminated the cutoff instructions and reworded some of the disposition instructions to allow agencies disposition options based on their internal procedures and operations. NARA clarified that the schedule covers only the temporary administrative records described in the various items. It does not cover all records maintained by Information Technology (IT) management organizations. Agency responsibilities to schedule records documenting unique agency programs should now be more apparent.

On the advice of the Office of Management and Budget, in October 2001 NARA requested one last Federal agency review of this notice containing the proposed schedule and explanatory information for each item. This information includes the records appraisal analysis normally provided in a separate appraisal memorandum. Based on comments received in October, NARA made some changes for clarification and elimination of redundancies. Federal agencies should note that the disposition instructions for items 1a and b, 2, 9b, 12b, and 13b, and the description for items 1b, 3b, 4a and b, 6a and b, 9a and b, 12a, and 13 were modified in response to the comments on the October 2001 draft. In addition, former item 8b was incorporated into former item 9, and former items 8a and 11 were deleted. The remaining schedule items were renumbered accordingly.

Throughout the process of developing and refining this new GRS, NARA representatives consulted with agency records officers and IT officials to resolve questions and clarify coverage of items. NARA analysts also reviewed records both within NARA and in a number of other agencies to ascertain the content of files. The information gathered during these consultations and examination of records is reflected in the appraisal analysis following each item.

Given the multiple reviews by Federal agencies, NARA believes that this schedule will be useful and relevant to

agencies. NARA now invites public comment on this proposed new General Records Schedule for Information Technology Operations and Management Records. Following is the complete text of the proposed GRS. The explanatory information and appraisal analysis is provided in brackets at the end of each item.

General Records Schedule 24—Information Technology Operations and Management Records

Introduction

This schedule provides disposal authorization for certain files created and maintained in the operation and management of information technology (IT) and related services. As defined in the Information Technology Management Reform Act of 1996 (now the Clinger-Cohen Act), ''information technology'' includes computers, ancillary equipment, software, firmware and similar procedures, services (including support services), and related resources.

This GRS does not cover all records relating to information technology operations and management. Offices with responsibility for IT operations also maintain administrative records covered by other GRS and records not in the GRS that must be scheduled by the agency. In addition, this GRS does not apply to system data or information content, which must be scheduled separately by submitting an SF 115, Request for Records Disposition Authority, to NARA.

The disposition instructions apply to records regardless of physical form or characteristics. Records may be maintained on paper, in microform, or electronically. Dispositions apply, however, only to records that are maintained as described in each item or subitem. If documents are part of a larger case file or recordkeeping system that contains records not covered in this GRS, agencies must separately schedule that file or system by submitting an SF 115 to NARA. If records covered by more than one item in this schedule are maintained together in one file or recordkeeping system, agencies must retain the records for the longest retention period authorized for those items.

Note that GRS 20, Electronic Records, remains in effect. GRS 20 covers certain temporary files associated with data base management. This new schedule supplements GRS 20 by providing disposal authority for temporary records relating to overall IT management, as opposed to the operation and use of specific systems. NARA is reviewing alternatives to GRS 20 and will develop revised requirements as it explores new approaches to managing electronic records.

1. Oversight and Compliance Files

Records in offices with agency-wide or bureau-wide responsibility for managing IT operations relating to compliance with IT policies, directives, and plans including recurring and special reports, responses to findings and recommendations, and reports of follow-up activities.

a. Performance measurements and benchmarks.

Destroy/delete when 5 years old or 1 year after responsible office determines that there are no unresolved issues, whichever is longer.

b. All other oversight and compliance records including:

- Certification and accreditation of equipment
- Quality assurance reviews and reports
- Reports on implementation of plans
- Compliance reviews
- Data measuring or estimating impact and compliance

Destroy/delete when 3 years old or 1 year after responsible office determines that there are no unresolved issues, whichever is longer.

[**Note:** See item 3b for performance files relating to systems.]

[*Appraisal analysis:* Item 1a covers such records as statistical performance data concerning system (and network) operations, including process steps or paths, time required for completion, and event or error indicators. These records include system availability reports that draw upon sample performance indicators to measure overall system performance. The retention period for this item relates to the ''5 year plans'' typically associated with IT systems.

Item 1b covers such materials as target IT architecture reports, systems development lifecycle handbooks, computer network assessments and follow-up documentation, authority to operate records, and certification and accreditation of equipment. These records are critical to the proper functioning of systems. Network assessments, for example, are conducted at regular intervals, and in cases where performance is found to be in need of improvement, the agency institutes a process to change or upgrade network equipment, configuration, or other components. Records under this item typically take the form of structured reports. Examples include contractor evaluation reports and other quality assurance records, market analyses and performance surveys, and benefit-cost analyses. Agencies may also maintain other compliance reviews including related analyses such as histograms illustrating trends across time for various groups, activities, and systems, and follow-up correspondence and corrective action reports.

The proposed dispositions for these will ensure the availability of records for a period of time that is sufficient to allow adequate systems management and will also ensure the preservation of records identifying problems until the problems have been resolved.]

2. IT Facility, Site Management, and Equipment Support Services Records.

Records maintained by offices responsible for the control and operation of buildings and rooms where IT equipment, systems, and storage media are located including:

- Files identifying IT facilities and sites, and
- Files concerning implementation of IT facility and site management and equipment support services provided to specific sites, including reviews, site visit reports, trouble reports, equipment service histories, reports of follow-up actions, and related correspondence.

Destroy/delete when 3 years old, or when superseded or obsolete, whichever is longer.

[*Appraisal analysis:* These records document the control and operation of buildings and rooms where IT equipment, systems, and storage media are located. Files include listings of facilities, trouble reports, reports on site visits and inspections, and service histories for equipment. Also included are copies of agency directives and lines of authority relating to such matters as facility operations, physical security of facilities, environmental security, including documents on fire prevention and control, electric power supply protection, magnetism protection, and ''good housekeeping'' procedures for protection against dust, dirt, and fire hazards.

These records need only to be kept for a relatively short period of time to satisfy administrative and operational needs. The proposed three-year retention period is adequate to ensure that IT operations are carried out in an environment that meets all applicable standards.

Records documenting control and operation of facilities that are maintained by units responsible for facilities management and physical security are retained for varying periods of time in accordance with other GRS items (e.g., GRS 18, items 9 and 10) and individual agency schedules.]

3. IT Asset and Configuration Management Files.

a. Inventories of IT assets, network circuits, and building or circuitry diagrams, including equipment control systems such as databases of barcodes affixed to IT physical assets. Destroy/delete 1 year after completion of the next inventory.

b. Records created and retained for asset management, performance and capacity management, system management, configuration and change management, and planning, follow-up, and impact assessment of operational networks and systems. Includes, but is not limited to:

(1) Data and detailed reports on implementation of systems, applications and modifications; application sizing, resource and demand management; documents identifying, requesting, and analyzing possible changes, authorizing changes, and documenting implementation of changes; documentation of software distribution and release or version management.

Destroy/delete 1 year after termination of system.

(2) Records of IT maintenance on the network infrastructure documenting preventative, corrective, adaptive and perfective (enhancement) maintenance actions, including requests for service, work orders, service histories, and related records.

Destroy/delete when 3 years old or 1 year after termination of system, whichever is sooner.

[*Appraisal analysis:* This item covers routine administrative records relating to existing IT systems, such as inventories of assets, including equipment control systems, databases of barcodes affixed to physical assets, work orders and service histories on maintenance of network infrastructure, and reports and other files relating to system implementation and modification. Detailed information is found in bar code reports, asset management guides, requests for services, requisitions for equipment, leases, change orders, purchase orders, property transfer control systems, flow reconfiguration requests, standardization requests and justifications. Other records include listings of devices such as routers, hubs, switches, and servers, described by make and model, location, and pertinent capacity and configuration information. These records differ from those covered by item 11. The records under item 3 relate to the ongoing maintenance and management of existing IT assets. The records under item 11 relate to the acquisition and implementation of new systems.

The proposed retention period in item 3a is appropriate since only current inventories are needed. Note that documents (or sections of documents) that are unchanged from prior inventories but that remain valid are kept in conjunction with current inventories. The proposed disposition instructions for item 3b(1) reflects the business need to retain for the life of a system detailed reports and data concerning the implementation, modification, and upgrading of systems infrastructure. For item 3b(2), the proposed disposition enables disposal of system maintenance records when three years old or one year after termination of the system, whichever is sooner. This will enable the agencies to ensure that proper maintenance procedures have been followed and to allow for any follow-up activities. If any maintenance activities have a major impact on a system, or lead to a significant change, those activities should be documented in item 3b(1).]

4. System Backups and Tape Library Records.

a.Backup tapes maintained for potential system restoration in the event of a system failure or other unintentional loss of data.

(1) Delete/destroy incremental backup tapes when superseded by a full backup, or when no longer needed for system restoration, whichever is later.

(2) Delete/destroy full backup tapes when second subsequent backup is verified as successful or when no longer needed for system restoration, whichever is later.

[**Note:** See GRS 20, item 8, for backups of master files and databases.]

b. Tape library records including automated files and manual records used to control the location, maintenance, and disposition of magnetic media in a tape library including list of holdings and control logs.

Destroy/delete when superseded or obsolete.

[*Appraisal analysis:* This item pertains to records accumulated to ensure the ability to resume operations in the event of a system failure. Item 4a covers incremental and full system backup tapes maintained for potential system restoration. It is distinguished from GRS 20, item 8, Backups of Files, which covers security copies of the substantive contents of master files and databases. The GRS 24 item applies to an IT shop's backups of system software (which, due to system configuration, may also include substantive data separately covered under GRS 20, item 8). Item 4b applies to Tape Library records including automated files and manual records controlling location maintenance, and disposition in a tape library of the records covered by item 4a, including lists of holdings and control logs. These records include ''vault lists,'' and other reports listing all back-up medium, documents certifying the completion of backup processes, and other run tasks and differential backup activities. Tape libraries also maintain the addresses of offsite storage facilities, and ''bin'' location within storage facilities.

Agencies may produce backups for purposes other than system restoration. Master file and database backups, which are produced to ensure against the loss of documents and other data, remain covered by GRS 20, item 8, Backups of Files. Item 4a of this schedule pertains to backups implemented by systems administrators to ensure the ability to restore the entire system in the event of a major network failure.

The proposed GRS provides that incremental back-up tapes be destroyed when superseded or when no longer needed for system restoration. This disposition instruction allows agencies to keep only the current incremental backup or to retain it as long as the agency considers it may be needed for system restoration. Agencies will keep at least one additional backup of the full system, for security purposes. As for the incremental backups, agencies decide if the basic retention period is sufficient and may keep full backups for as long as they may be needed for system restoration. The disposition instruction for records used to control the location, maintenance, and disposition of magnetic media in a tape library provides for destruction when they are superseded, obsolete, or no longer needed. This authorization is appropriate because agencies need only the current, accurate information on the location and status of backup tapes.]

5. Files Related to Maintaining the Security of Systems and Data.

a. System Security Plans and Disaster Recovery Plans.

Destroy/delete 1 year after system is superseded.

b. Documents identifying IT risks and analyzing their impact, risk measurements and assessments, actions to mitigate risks, implementation of risk action plan, service test plans, test files and data.

Destroy/delete 1 year after system is superseded.

[*Appraisal analysis:* Item 5a provides disposal authority for records that outline official procedures for securing and maintaining IT infrastructure, typically system security plans, disaster recovery plans, and continuity of operations plans. The files include such records as published computer technical manuals and guides, examples and references used to produce guidelines covering security issues related to specific systems and equipment, records on disaster exercises and resulting evaluations, network vulnerability assessments, risk surveys, and other studies, such as formal security vulnerability assessments conducted by IG offices. These records relate to the specific systems for which they were written. System replacements will have new security and risk management requirements that may be totally different because of the architecture of the replacement system. The disposition instruction for item 5a provides for maintenance of the records to ensure a continuity of security controls throughout the life of the system.

Item 5b covers analysis of security policies, processes, and guidelines, as well as system risk management and vulnerability analyses. Examples of specific documents are automated information systems security directives and computer virus handbooks. Records covered by GRS 18, item 27 may appear similar, but GRS 18 relates to plans developed to protect life and property and GRS 24 covers records relating specifically to the security of IT systems. The retention period for these records reflects the need to retain records while a system is current and provides for review of documentation for superseded systems in connection with ensuring adequate protection for new systems.]

6. User Identification, Profiles, Authorizations, and Password Files

EXCLUDES records relating to electronic signatures.

a. Systems requiring special accountability, *e.g.,* those containing information that may be needed for audit or investigative purposes and those that contain classified records.

Destroy/delete inactive file 6 years after user account is terminated or password is altered, or when no longer needed for investigative or security purposes, whichever is later.

b. Routine systems, *i.e.,* those not covered by item 6a.

See GRS 20, item 1c.

[*Appraisal analysis:* Item 6a provides disposition instructions for user identification records, including user profiles and passwords associated with systems requiring special accountability, such as systems containing information that is security classified. The item authorizes the destruction of records concerning user identification six years after a user account is terminated or password is altered, or when it is no longer needed for security purposes, whichever is later. This will permit agencies to retain user identification records associated with highly sensitive or potentially vulnerable systems in order to provide historical data that may be needed in support of investigations or litigation arising from inappropriate access.

Records covered under item 6b include records such as user passwords and profiles for those systems not requiring special accountability. The records in these systems are typically system generated according to preset requirements. A system may, for example, prompt users for new passwords every 90 days for all users. These records are covered by GRS 20, Item 1c.]

7. Computer Security Incident Handling, Reporting and Follow-up Records

Destroy/delete 3 years after all necessary follow-up actions have been completed.

[*Appraisal analysis:* This item covers records relating to attempted or actual system security breaches, including break-ins (''hacks''), virus threats, improper staff usage, failure of security provisions or procedures, and potentially compromised information assets.

These records typically consist of narrative reports and background documentation relating to individual events or issues. These records include references to unauthorized intrusions, web site defacement, misuse of system resources, and other incidents noted by the Federal Computer Incident Response Center (FedCIRC, http://www.fedcirc.gov).

Retaining records for 3 years after all follow-up actions, including judicial procedures, have been completed ensures the availability of active case records and provides an adequate amount of time after a case is closed for any necessary follow-up action. Any significant incidents (e.g., a major system failure or compromise of critical government data) would be documented in program records, such as those in the office of the Inspector General, which must be scheduled separately by submitting an SF 115 to NARA.]

8. IT Operations Records

a. Workload schedules, run reports, and schedules of maintenance and support activities.

Destroy/delete when 1 year old.

b. Problem reports, proposals for changes and related decision documents relating to the software infrastructure of the network or system.

Destroy/delete 1 year after problem is resolved.

c. Reports on operations, including measures of benchmarks, performance indicators, and critical success factors, error and exception reporting, self-assessments, performance monitoring; and management reports.

Destroy/delete when 3 years old.

[*Appraisal analysis:* Item 8a includes workload schedules, run reports, including cycle time reports, schedules of maintenance, and related records. It is generally agreed within the Federal IT community that the value of these voluminous records expires after one year.

Item 8b covers problem reports, proposals for changes and related decision documents relating to the software infrastructure of a network or system. The retention period proposed for these records will satisfy the administrative and operational needs of IT offices by ensuring the retention of records relating to issues until they have been resolved.

Item 8c covers reports on operations, including measures of benchmarks, performance monitoring, and management reports. Agencies indicated that the proposed retention period would meet their administrative and operational requirements for these routine files.]

9. Financing of IT Resources and Services

Note: Copies of records needed to support contracts should be filed in procurement files, which are scheduled under GRS 3.]

a. Agreements formalizing performance criteria for quantity and quality of service, including definition of responsibilities, response times and volumes, charging, integrity guarantees, and non-disclosure agreements. Destroy/delete 3 years after agreement is superseded or terminated.

b. Files related to managing third-party services, including records that document control measures for reviewing and monitoring contracts and procedures for determining their effectiveness and compliance. Destroy/delete 3 years after control measures or procedures are superseded or terminated.

c. Records generated in IT management and service operations to identify and allocate charges and track payments for computer usage, data processing and other IT services EXCLUDING records that are part of the agency's cost accounting system, which are covered in GRS 8, items 6 and 7.

Destroy/delete records with no outstanding payment issues when 3 years old.

[*Appraisal analysis*: These records include agreements formalizing performance criteria for quantity and quality of service, files related to managing third-party services, and records generated in IT management and service operations, financial records including service level agreements defining service and support levels in quantified terms workload, hardware, software, as well as ad hoc reports documenting the continued validity of financial agreements. Records also include documentation related to contractor award fee for superior service.

These records relate to financial management, not IT equipment and services per se, and should be kept for three years after agreements, procedures, and payment issues are superseded, terminated, or resolved, as applicable. This retention period reflects normal audit cycles. These files are kept by IT offices to support their role in the acquisition of and payment for computer software and services. Records pertaining to these subjects that are needed to protect legal rights, address fiscal concerns, and/or provide Government accountability are maintained in procurement and finance offices in accordance with other GRS items or agency schedules.]

10. IT Customer Service Files

a. Records related to providing help desk information to customers, including pamphlets, responses to ''Frequently Asked Questions,'' and other documents prepared in advance to assist customers. Destroy/delete 1 year after record is superseded or obsolete.

b. Help desk logs and reports and other files related to customer query and problem response; query monitoring and clearance; and customer feedback records; and related trend analysis and reporting. Destroy/delete when 1 year old or when no longer needed for review and analysis, whichever is later.

[*Appraisal analysis*: The records covered by Item 10 relate to providing customer service and individual support to customers. Included are such records as pamphlets and Frequently Asked Questions, help desk logs and incident reports, ''help desk tickets,'' user guides, trouble reports, customer queries, feedback records, and trend analyses. These document end-user inquiries and requests for assistance.

These voluminous records are critical to the effective operation of IT systems. However, they have administrative value for only a brief period of time. This item will authorize destruction of customer service records such as pamphlets and lists of ''frequently asked questions'' (FAQs) one year after the record is superseded or obsolete and that help desk logs and other files related to customer query, feedback, and analysis be destroyed when one year old. The recommended disposition instructions will satisfy the administrative and operational needs of IT offices, including the need to dispose of these files in a timely fashion.]

11. *IT Infrastructure Design and Implementation Files*

Records of individual projects designed to provide and support new agency IT infrastructure (see Note), systems, and services. Includes records documenting:

- Requirements for and implementation of functions such as
  - —Maintaining network servers, desktop computers, and other hardware
  - —Installing and upgrading network operating systems and shared applications
  - —Providing data telecommunications
- Infrastructure development and maintenance such as
  - —Acceptance/accreditation of infrastructure components
  - —Analysis of component options, feasibility, costs and benefits
  - —Work associated with implementation, modification, and troubleshooting
- Models, diagrams, schematics, and technical documentation
- Quality assurance reviews and test plans, data, and results.

a. Records for projects that are not implemented. Destroy/delete 1 year after final decision is made.

b. Records for projects that are implemented.

Destroy/delete 5 years after project is terminated.

c. Installation and testing records. Destroy/delete 3 years after final decision on acceptance is made.

[Note: IT Infrastructure means the basic systems and services used to supply the agency and its staff with access to computers and data telecommunications. Components include hardware such as printers, desktop computers, network and web servers, routers, hubs, and network cabling, as well as software such as operating systems (e.g., Microsoft Windows and Novell NetWare) and shared applications (e.g., electronic mail, word processing, and database programs). The services necessary to design, implement, test, validate, and maintain such components are also considered part of an agency's IT infrastructure. However, records relating to specific systems that support or document mission goals are not covered by this item and must be scheduled individually by the agency by submission of an SF 115 to NARA.]

[*Appraisal analysis*: These records pertain to individual new enterprise projects designed to provide and support agency IT infrastructure. IT infrastructure includes the basic systems and services used to supply the agency and its staff with access to computers and data telecommunications. Included are hardware, software, and the services necessary to design, implement, and maintain such components. This item covers records concerning the infrastructure of IT operations. These records do not document programs fundamental to an agency's mission nor the IT systems utilized by agencies in carrying out their distinctive functions. Rather, these records are clearly administrative in nature and are of the same character throughout the Government. Records include developmental records such as quality assurance plans, requirement specifications, technology refresh plans, operational support and test plans, final operational support plan, and post installation reviews and briefings. These records differ from those found in Item 3 above. Item 3 is concerned with the ongoing maintenance and management of existing IT assets. Item 11 is concerned with the acquisition and implementation of new operating systems.

The disposition instruction for item 11a provides that records for projects that are not implemented be destroyed/deleted one year after a final decision has been made. This retention period is appropriate. If a proposed project is rejected, there is no need to retain the related records for an extended period of time. In accordance with Item 11b, records for projects that are implemented are to be destroyed five years after the project terminates. This proposed retention period will ensure that records germane to a requirement are available while the requirement is still current and for a period of time thereafter for use in developing new projects. In item 11c, installation and testing records are proposed for destruction or deletion 3 years after the final decision on acceptance is made. This retention period will ensure the

availability of records should problems develop and is also consistent with audit cycles.]

12. Electronic Mail and Word Processing System Copies

Electronic copies of records that are created on electronic mail and word processing systems and used solely to generate a recordkeeping copy of the records covered by the other items in this schedule. Also includes electronic copies of records created on electronic mail and word processing systems that are maintained for updating, revision, or dissemination.

a. Copies that have no further administrative value after the recordkeeping copy is made. Includes copies maintained by individuals in personal files, personal electronic mail directories, or other personal directories on hard disk or network drives, and copies on shared network drives that are used only to produce the recordkeeping copy. Destroy/delete within 180 days after the recordkeeping copy has been produced.

b. Copies used for dissemination, revision, or updating that are maintained in addition to the recordkeeping copy. Destroy/delete when dissemination, revision, or updating is completed.

[*Appraisal analysis*: This item will provide disposal authority for electronic mail (email) and word processing records used solely to produce records described in GRS 24, after a recordkeeping copy has been produced, and electronic copies of records described in GRS 24 used solely for dissemination, revision, or updating that are maintained in addition to the recordkeeping copy. In 1998 NARA added an item with the same wording as this item 12 to GRS 1–16, 18, and 23. Item 12 is in keeping with the authority that exists throughout the GRS to dispose of email and word processing copies of records within the scope of each GRS.

Agencies should use agency specific schedules developed following the guidance in NARA Bulletin 2001–03 or GRS 20 Items 13 and 14 to dispose of email and word processing copies of other information technology records (*i.e.*, records not covered by this GRS) that are not required for recordkeeping purposes. Please note that neither this item in GRS 24, the identical items in other GRS, nor GRS 20, items 13 and 14, apply to the copies of email and word processing records that are designated for recordkeeping purposes.]

Dated: May 16, 2002.

Michael J. Kurtz,

Assistant Archivist for Records Services—Washington DC.

[FR Doc. 02–16158 Filed 6–26–02; 8:45 am]

BILLING CODE 7515–01–P

NATIONAL ARCHIVES AND RECORDS ADMINISTRATION

Records Schedules; Availability and Request for Comments

AGENCY: National Archives and Records Administration (NARA).

ACTION: Notice of availability of proposed records schedules; request for comments.

SUMMARY: The National Archives and Records Administration (NARA) publishes notice at least once monthly of certain Federal agency requests for records disposition authority (records schedules). Once approved by NARA, records schedules provide mandatory instructions on what happens to records when no longer needed for current Government business. They authorize the preservation of records of continuing value in the National Archives of the United States and the destruction, after a specified period, of records lacking administrative, legal, research, or other value. Notice is published for records schedules in which agencies propose to destroy records not previously authorized for disposal or reduce the retention period of records already authorized for disposal. NARA invites public comments on such records schedules, as required by 44 U.S.C. 3303a(a).

DATES: Requests for copies must be received in writing on or before August 12, 2002. Once the appraisal of the records is completed, NARA will send a copy of the schedule. NARA staff usually prepare appraisal memorandums that contain additional information concerning the records covered by a proposed schedule. These, too, may be requested and will be provided once the appraisal is completed. Requesters will be given 30 days to submit comments.

ADDRESSES: To request a copy of any records schedule identified in this notice, write to the Life Cycle Management Division (NWML), National Archives and Records Administration (NARA), 8601 Adelphi Road, College Park, MD 20740–6001. Requests also may be transmitted by FAX to 301–837–3698 or by e-mail to *records.mgt@nara.gov*. Requesters must cite the control number, which appears in parentheses after the name of the agency which submitted the schedule, and must provide a mailing address. Those who desire appraisal reports should so indicate in their request.

FOR FURTHER INFORMATION CONTACT: Marie Allen, Director, Life Cycle Management Division (NWML), National Archives and Records Administration, 8601 Adelphi Road, College Park, MD 20740–6001. Telephone: (301) 837–3635. E-mail: *records.mgt@nara.gov.*

SUPPLEMENTARY INFORMATION: Each year Federal agencies create billions of records on paper, film, magnetic tape, and other media. To control this accumulation, agency records managers prepare schedules proposing retention periods for records and submit these schedules for NARA's approval, using the Standard Form (SF) 115, Request for Records Disposition Authority. These schedules provide for the timely transfer into the National Archives of historically valuable records and authorize the disposal of all other records after the agency no longer needs them to conduct its business. Some schedules are comprehensive and cover all the records of an agency or one of its major subdivisions. Most schedules, however, cover records of only one office or program or a few series of records. Many of these update previously approved schedules, and some include records proposed as permanent.

No Federal records are authorized for destruction without the approval of the Archivist of the United States. This approval is granted only after a thorough consideration of their administrative use by the agency of origin, the rights of the Government and of private persons directly affected by the Government's activities, and whether or not they have historical or other value.

Besides identifying the Federal agencies and any subdivisions requesting disposition authority, this public notice lists the organizational unit(s) accumulating the records or indicates agency-wide applicability in the case of schedules that cover records that may be accumulated throughout an agency. This notice provides the control number assigned to each schedule, the total number of schedule items, and the number of temporary items (the records proposed for destruction). It also includes a brief description of the temporary records. The records schedule itself contains a full description of the records at the file unit level as well as their disposition. If NARA staff has prepared an appraisal memorandum for the schedule, it too

includes information about the records. Further information about the disposition process is available on request.

Schedules Pending

1. Department of the Army, Agency-wide (N1–AU–02–21, 4 items, 2 temporary items). Records relating to notification rosters for continuity of operations emergency relocation groups. Included are files on contact information, member responsibilities, and relocation assignments. Also included are electronic copies of documents created using electronic mail and word processing. Recordkeeping copies of emergency plans and reports are proposed for permanent retention. This schedule authorizes the agency to apply the proposed disposition instructions to any recordkeeping medium.

2. Department of the Army, Agency-wide (N1–AU–02–22, 2 items, 2 temporary items). General correspondence, including comments provided to other offices on their issuances, requests for information and replies, reference copies of records, informal reports, recommendations and suggestions, work control records, and other records of a general, routine, and administrative nature. Also included are electronic copies of documents created using electronic mail and word processing. This schedule authorizes the agency to apply the proposed disposition instructions to any recordkeeping medium.

3. Department of the Army, Agency-wide (N1–AU–02–23, 5 items, 5 temporary items). Records relating to radiation safety. Included are training attendance records and test results, source accounting records, instrument and source calibration files, and routine reports. Also included are electronic copies of documents created using electronic mail and word processing. This schedule authorizes the agency to apply the proposed disposition instructions to any recordkeeping medium.

4. Department of Defense, Defense Intelligence Agency (N1–373–02–2, 7 items, 7 temporary items). Records relating to the use of International Merchants Purchase Authority Card (IMPAC) credit cards, including authorization letters, reports, account records, and electronic copies of records created using electronic mail and word processing.

5. Department of Health and Human Services, Food and Drug Administration (N1–88–02–1, 14 items, 14 temporary items). Records of the Center for Devices and Radiological Health accumulated in connection with the Medical Product Surveillance System Pilot. Included are such records as paper source documents, electronic data, and output reports relating to injuries caused by medical devices and to malfunctions of such devices. Also included are files relating to pilot administration and electronic copies of records created using electronic mail and word processing. Paper copies of these files were previously approved for disposal.

6. Department of Health and Human Services, Office of the General Counsel (N1–468–02–1, 3 items, 3 temporary items). Case files pertaining to litigation that does not establish a precedent. Also included are electronic copies of records created using electronic mail and word processing relating to litigation cases.

7. Department of the Interior, U.S. Geological Survey (N1–57–02–2, 227 items, 225 temporary items). Records relating to information resources management, administrative support matters, personnel management, equal employment opportunity, and payroll. Included are records relating to such matters as the agency web site, foreign and reimbursable travel, self-service stores, file plans, library operations, network operations, telecommunications, audits, personnel recruitment, position classification, training, time and attendance, and awards. Also included are reading and chronological files, administrative databases, and electronic copies of records created using electronic mail, spreadsheet, and word processing applications. Proposed for permanent retention are recordkeeping copies of records management filing systems records and regulations case files.

8. Environmental Protection Agency, Office of Inspector General (N1–412–02–1, 2 items, 2 temporary items). Reports of internal reviews of Office of Inspector General (OIG) procedures or programs for economy, efficiency, and compliance with OIG policies and professional standards. Also included are electronic copies of records created using electronic mail and word processing.

9. Environmental Protection Agency, Office of Inspector General (N1–412–02–2, 2 items, 2 temporary items). Records relating to Hotline complaints, including forms, correspondence, synopses of cases, and reports. Also included are electronic copies of records created using electronic mail and word processing.

10. Federal Energy Regulatory Commission, Agency-wide (N1–138–02–1, 3 items, 3 temporary items). Records relating to interpretations and advisory opinions. Included are correspondence providing informal advice, interpretations and/or opinions presented by Commission staff, and electronic copies of documents created using electronic mail and word processing. Official opinions were previously approved for permanent retention.

11. National Archives and Records Administration (N1–64–02–10, 5 items, 4 temporary items). Administrative records and work papers relating to a records management initiative project. Also included are electronic copies of records created using electronic mail and word processing. Proposed for permanent retention are recordkeeping copies of project program records.

12. Office of Personnel Management, Office of the Chief Information Officer (N1–478–02–4, 12 items, 9 temporary items). Records relating to agency oversight of Federal Executive Boards, including administrative guidance, project files, and the Federal Executive Board web site. Also included are electronic copies of records created using electronic mail and word processing. Proposed for permanent retention are recordkeeping copies of historical files, annual reports, and policy development project files.

Dated: June 20, 2002.

Michael J. Kurtz,

Assistant Archivist for Record Services—Washington, DC.

[FR Doc. 02–16159 Filed 6–26–02; 8:45 am]

BILLING CODE 7515–01–P

NATIONAL FOUNDATION ON THE ARTS AND THE HUMANITIES

National Endowment for the Arts; Leadership Initiatives Advisory Panel

Pursuant to section 10(a)(2) of the Federal Advisory Committee Act (Public Law 92–463), as amended, notice is hereby given that a meeting of the Leadership Initiatives Advisory Panel, Design Section (New Public Works category), will be held by teleconference from 12 p.m.–3:45 p.m. on Tuesday, July 2, 2002 in Room 730 at the Nancy Hanks Center, 1100 Pennsylvania Avenue, NW., Washington, DC, 20506.

This meeting is for the purpose of Panel review, discussion, evaluation, and recommendations on financial assistance under the National Foundation on the Arts and the Humanities Act of 1965, as amended, including information given in confidence to the agency. In accordance with the determination of the Chairman of May 2, 2002, these sessions will be closed to the public pursuant to

subsection (c)(4), (6) and (9)(B) of section 552b of Title 5, United States Code.

Further information with reference to this meeting can be obtained from Ms. Kathy Plowitz-Worden, Panel Coordinator, National Endowment for the Arts, Washington, DC, 20506, or call 202/682–5691.

Dated: June 21, 2002.

Kathy Plowitz-Worden,

Panel Coordinator.

[FR Doc. 02–16297 Filed 6–26–02; 8:45 am]

BILLING CODE 7537–01–P

NUCLEAR REGULATORY COMMISSION

Agency Information Collection Activities: Proposed Collection; Comment Request

AGENCY: Nuclear Regulatory Commission (NRC).

ACTION: Notice of pending NRC action to submit an information collection request to OMB and solicitation of public comment.

SUMMARY: The NRC is preparing a submittal to OMB for review of continued approval of information collections under the provisions of the Paperwork Reduction Act of 1995 (44 U.S.C. chapter 35).

Information pertaining to the requirement to be submitted:

1. *The title of the information collection:* 10 CFR part 9, Public Records.

2. *Current OMB approval number:* 3150–0043.

3. *How often the collection is required:* On occasion.

4. *Who is required or asked to report:* Individuals requesting access to records under the Freedom of Information or Privacy Acts, or to records that are already publicly available in the NRC's Public Document Room.

5. *The number of annual respondents:* 11,272.

6. *The number of hours needed annually to complete the requirement or request:* 2,832.

7. *Abstract:* 10 CFR part 9 establishes information collection requirements for individuals making requests for records under the Freedom of Information Act (FOIA) or Privacy Act (PA). It also contains requests to waive or reduce fees for searching for and reproducing records in response to FOIA requests; and requests for expedited processing of requests. The information required from the public is necessary to identify the records they are requesting; to justify requests for waivers or reductions in searching or copying fees; or to justify expedited processing.

Submit, by August 26, 2002, comments that address the following questions:

1. Is the proposed collection of information necessary for the NRC to properly perform its functions? Does the information have practical utility?

2. Is the burden estimate accurate?

3. Is there a way to enhance the quality, utility, and clarity of the information to be collected?

4. How can the burden of the information collection be minimized, including the use of automated collection techniques or other forms of information technology?

A copy of the draft supporting statement may be viewed free of charge at the NRC Public Document Room, One White Flint North, 11555 Rockville Pike, Room O–1 F23, Rockville, MD 20852. OMB clearance requests are available at the NRC worldwide web site: *http://www.nrc.gov/public-involve/doc-comment/omb/index.html.* The document will be available on the NRC home page site for 60 days after the signature date of this notice.

Comments and questions about the information collection requirements may be directed to the NRC Clearance Officer, Brenda Jo. Shelton, U.S. Nuclear Regulatory Commission, T–6 E6, Washington, DC 20555–0001, by telephone at 301–415–7233, or by Internet electronic mail at *INFOCOLLECTS@NRC.GOV.*

Dated at Rockville, Maryland, this 21st day of June, 2002.

For the Nuclear Regulatory Commission.

Beth St. Mary,

Acting NRC Clearance Officer, Office of the Chief Information Officer.

[FR Doc. 02–16245 Filed 6–26–02; 8:45 am]

BILLING CODE 7590–01–P

NUCLEAR REGULATORY COMMISSION

Agency Information Collection Activities: Submission for the Office of Management and Budget (OMB) Review; Comment Request

AGENCY: U.S. Nuclear Regulatory Commission (NRC).

ACTION: Notice of the OMB review of information collection and solicitation of public comment.

SUMMARY: The NRC has recently submitted to OMB for review the following proposal for the collection of information under the provisions of the Paperwork Reduction Act of 1995 (44 U.S.C. Chapter 35). The NRC hereby informs potential respondents that an agency may not conduct or sponsor, and that a person is not required to respond to, a collection of information unless it displays a currently valid OMB control number.

1. *Type of submission, new, revision, or extension:* Revision.

2. *The title of the information collection:* 48 CFR 20, U.S. Nuclear Regulatory Commission Acquisition Regulation (NRCAR).

3. *The form number if applicable:* Not applicable.

4. *How often the collection is required:* On occasion; one time.

5. *Who will be required or asked to report:* Offerors responding to NRC solicitations and contractors receiving awards from NRC.

6. *An estimate of the number of responses:* 3,504.

7. *The estimated number of annual respondents:* 355.

8. *An estimate of the number of hours needed annually to complete the requirement or request:* 26,088 hours (7.3 hours per response).

9. *An indication of whether Section 3507(d), Pub. L. 104–13 applies:* Not applicable.

10. *Abstract:* The mandatory requirements of the NRCAR implement and supplement the government-wide Federal Acquisition Regulation, and ensure that the regulations governing the procurement of goods and services within the NRC satisfy the needs of the agency.

A copy of the final supporting statement may be viewed free of charge at the NRC Public Document Room, One White Flint North, 11555 Rockville Pike, Room O–1 F23, Rockville, MD 20852. OMB clearance requests are available at the NRC worldwide web site: *http://www.nrc.gov/public-involve/doc-comment/omb/index.html.* The document will be available on the NRC home page site for 60 days after the signature date of this notice.

Comments and questions should be directed to the OMB reviewer listed below by July 29, 2002. Comments received after this date will be considered if it is practical to do so, but assurance of consideration cannot be given to comments received after this date.

Bryon Allen,
Office of Information and Regulatory Affairs (3150–0169),
NEOB–10202,
Office of Management and Budget,
Washington, DC 20503.

Comments can also be submitted by telephone at (202) 395–3084.

The NRC Clearance Officer is Brenda Jo. Shelton, 301–415–7233.

Dated at Rockville, Maryland, this 19th day of June, 2002.

For the Nuclear Regulatory Commission.

Brenda Jo. Shelton,

NRC Clearance Officer, Office of the Chief Information Officer.

[FR Doc. 02–16203 Filed 6–26–02; 8:45 am]

BILLING CODE 7590–01–P

NUCLEAR REGULATORY COMMISSION

[Docket No. 72–25]

Foster Wheeler Environmental Corporation, Idaho Spent Fuel Facility; Notice of Docketing, Notice of Consideration of Issuance, and Notice of Opportunity for a Hearing for a Materials License for the Idaho Spent Fuel Facility

The Nuclear Regulatory Commission (NRC or Commission) is considering an application dated November 19, 2001, for a materials license under the provisions of 10 CFR part 72, from Foster Wheeler Environmental Corporation (the applicant or FWENC) for the receipt, possession, storage and transfer of spent fuel and other radioactive materials associated with spent fuel at its proposed Idaho Spent Fuel Facility, an independent spent fuel storage installation (ISFSI), to be located on the Idaho National Engineering and Environmental Laboratory site in Butte County, Idaho. If granted, the license will authorize the applicant to store spent fuel in a dry storage system at the applicant's Idaho Spent Fuel Facility site. Pursuant to the provisions of 10 CFR part 72, the term of the license for the ISFSI would be twenty (20) years.

This application was docketed under 10 CFR part 72; the ISFSI Docket No. is 72–25.

Prior to issuance of the requested license, the Commission will have made the findings required by the Atomic Energy Act of 1954, as amended (the Act), and the Commission's regulations. The issuance of the materials license will not be approved until the NRC has reviewed the application and has concluded that approval of the license will not be inimical to the common defense and security and will not constitute an unreasonable risk to the health and safety of the public. The NRC will complete an environmental impact statement in accordance with 10 CFR part 51. This action will be the subject of a subsequent notice in the **Federal Register**.

By thirty (30) days from the date of publication of this notice in the **Federal Register**, the applicant may file a request for a hearing; and any person whose interest may be affected by this proceeding and who wishes to participate as a party in the proceeding must file a written request for a hearing and a petition for leave to intervene with respect to the subject materials license. Requests for a hearing and petitions for leave to intervene shall be filed in accordance with the Commission's ''Rules of Practice for Domestic Licensing Proceedings'' in 10 CFR part 2. Interested persons should consult a current copy of 10 CFR 2.714 [1], which is available at the Commission's Public Document Room (PDR), located at One White Flint North, 11555 Rockville Pike (first floor), Rockville, Maryland, or electronically on the Internet at the NRC Web site *http://www.nrc.gov/reading-rm/doc-collections/cfr.* If there are problems in accessing the document, contact the PDR Reference staff at 1–800–397–4209, 301–415–4737, or by e-mail to *pdr@nrc.gov.* If a request for hearing or petition for leave to intervene is filed by the above date, the Commission or an Atomic Safety and Licensing Board designated by the Commission or by the Chairman of the Atomic Safety and Licensing Board Panel will rule on the request and/or petition, and the Secretary or the designated Atomic Safety and Licensing Board will issue a notice of hearing or an appropriate order. In the event that no request for hearing or petition for leave to intervene is filed by the above date, the NRC may, upon satisfactory completion of all required evaluations, issue the materials license without further prior notice.

As required by 10 CFR 2.714, a petition for leave to intervene shall set forth with particularity the interest of the petitioner in the proceeding and how that interest may be affected by the results of the proceeding. The petition should specifically explain the reasons why intervention should be permitted with particular reference to the following factors: (1) The nature of the petitioner's right under the Act to be made a party to the proceeding; (2) the nature and extent of the petitioner's property, financial, or other interest in the proceeding; and (3) the possible effect of any order that may be entered in the proceeding on the petitioner's interest. The petition should also identify the specific aspect(s) of the subject matter of the proceeding as to which the petitioner wishes to intervene. Any person who has filed a petition for leave to intervene or who has been admitted as a party may amend a petition, without requesting leave of the Atomic Safety and Licensing Board up to 15 days prior to the holding of the first pre-hearing conference scheduled in the proceeding, but such an amended petition must satisfy the specificity requirements described above.

Not later than fifteen (15) days prior to the first pre-hearing conference scheduled in the proceeding, a petitioner shall file a supplement to the petition to intervene which must include a list of contentions which are sought to be litigated in the matter. Each contention must consist of a specific statement of the issue of law or fact to be raised or controverted. In addition, the petitioner shall provide a brief explanation of the bases of the contention and a concise statement of the alleged facts or expert opinion which support the contention and on which the petitioner intends to rely in proving the contention at the hearing. The petitioner must also provide references to those specific sources and documents of which the petitioner is aware and on which the petitioner intends to rely to establish those facts or expert opinion. Petitioner must provide sufficient information to show that a genuine dispute exists with the applicant on a material issue of law or fact. Contentions shall be limited to matters within the scope of the action under consideration. The contention must be one which, if proven, would entitle the petitioner to relief. A petitioner who fails to file such a supplement which satisfies these requirements with respect to at least one contention will not be permitted to participate as a party.

[1] The most recent version of Title 10 of the Code of Federal Regulations, published January 1, 2002, inadvertently omitted the last sentence of 10 CFR 2.714(d) and subparagraphs (d)(1) and (2), regarding petitions to intervene and contentions. Those provisions are extant and still applicable to petitions to intervene. Those provisions are as follows: ''In all other circumstances, such ruling body or officer shall, in ruling on—

(1) A petition for leave to intervene or a request for a hearing, consider the following factors, among other things:

(i) The nature of the petitioner's right under the Act to be made a party to the proceeding.

(ii) The nature and extent of the petitioner's property, financial, or other interest in the proceeding.

(iii) The possible effect of any order that may be entered in the proceeding on the petitioner's interest.

(2) The admissibility of a contention, refuse to admit a contention if:

(i) The contention and supporting material fail to satisfy the requirements of paragraph (b)(2) of this section; or

(ii) The contention, if proven, would be of no consequence in the proceeding because it would not entitle petitioner to relief.''

Those permitted to intervene become parties to the proceeding, subject to any limitations in the order granting leave to intervene, and have the opportunity to participate fully in the conduct of the hearing.

A request for a hearing or petition for leave to intervene must be filed with the Secretary of the Commission, U.S. Nuclear Regulatory Commission, Washington, DC 20555, Attention: Document Control Desk or may be delivered to the Commission's Public Document Room, One White Flint North Building, 11555 Rockville Pike, Rockville, MD, by the above date. Because of continuing disruptions in delivery of mail to United States Government offices, it is requested that petitions for leave to intervene and requests for hearing be transmitted to the Secretary of the Commission either by means of facsimile transmission to 301–415–1101 or by e-mail to *hearingdocket@nrc.gov.* A copy of the request for hearing and petition for leave to intervene should also be sent to the Office of the General Counsel, U.S. Nuclear Regulatory Commission, Washington, DC 20555, and because of continuing disruptions in delivery of mail to United States Government offices, it is requested that copies be transmitted either by means of facsimile transmission to 301–415–3725 or by e-mail to *OGCMailCenter@nrc.gov.* A copy of the request for hearing and petition for leave to intervene should also be sent to Mr. Donald I. Rogers, Jr., Executive Vice President and Chief Operating Officer, Foster Wheeler Environmental Corporation, 1000 The American Road, Morris Plains, NJ 07950. Where petitions are filed during the last ten (10) days of the notice period, it is requested that the petitioner promptly so inform the NRC by a toll-free telephone call (800–368–5642 Extension 415–8500) to E. William Brach, Director, Spent Fuel Project Office, Office of Nuclear Material Safety and Safeguards, with the following message: petitioner's name and telephone number; date petition was mailed; facility name; and publication date and page number of this **Federal Register** notice.

Non-timely filings of petitions for leave to intervene, amended petitions, supplemental petitions, and/or requests for hearing will not be entertained absent a determination by the Commission, the presiding Officer, or the presiding Atomic Safety and Licensing Board that the petition and/or request should be granted based upon a balancing of the factors specified in 10 CFR 2.714(a)(1)(i)–(v) and 2.714(d).

For further details with respect to this application, see the application dated November 19, 2001, which is available for public inspection at the Commission's Public Document Room, One White Flint North Building, 11555 Rockville Pike, Rockville, MD or from the publicly available records component of NRC's document system (ADAMS). ADAMS is accessible from the NRC Web site at *http://www.nrc.gov/reading-rm/adams.html* (the Public Electronic Reading Room). Persons who do not have access to ADAMS or who encounter problems in accessing the documents located in ADAMS, should contact the NRC PDR Reference staff by telephone at 1–800–397–4209, 301–415–4737 or by e-mail to *pdr@nrc.gov.*

Dated at Rockville, Maryland, this 18th day of June, 2002.

For the Nuclear Regulatory Commission.

E. William Brach,

Director, Spent Fuel Project Office, Office of Nuclear Material Safety and Safeguards.

[FR Doc. 02–16244 Filed 6–26–02; 8:45 am]

BILLING CODE 7590–01–P

RAILROAD RETIREMENT BOARD

Proposed Collection; Comment Request

SUMMARY: In accordance with the requirement of section 3506(c)(2)(A) of the Paperwork Reduction Act of 1995 which provides opportunity for public comment on new or revised data collections, the Railroad Retirement Board (RRB) will publish summaries of proposed data collections.

Comments are invited on: (a) Whether the proposed information collection is necessary for the proper performance of the functions of the agency, including whether the information has practical utility; (b) the accuracy of the RRB's estimate of the burden of the collection of the information; (c) ways to enhance the quality, utility, and clarity of the information to be collected; and (d) ways to minimize the burden related to the collection of information on respondents, including the use of automated collection techniques or other forms of information technology.

Title and purpose of information collection:

Medicare; OMB 3220–0082

Under Section 7(d) of the Railroad Retirement Act (RRA), the Railroad Retirement Board (RRB) administers the Medicare program for persons covered by the railroad retirement system. The RRB uses Form AA–6, *Employee Application for Medicare;* Form AA–7, *Spouse/Divorced Spouse Application for Medicare;* and Form AA–8, *Widow/Widower Application for Medicare;* to obtain the information needed to determine whether individuals who have not yet filed for benefits under the RRA are qualified for Medicare payments provided under Title XVIII of the Social Security Act.

Further, in order for RRB to determine if a qualified railroad retirement beneficiary who is claiming supplementary medical insurance coverage under Medicare is entitled to a Special Enrollment Period (SEP) and/or premium surcharge relief because of coverage under an Employer Group Health Plan (EGHP), is needs to obtain information regarding the claimant's EGHP coverage, if any. The RRB uses Form RL–311–F, Evidence of Coverage Under An Employer Group Health Plan, to obtain the basic information needed by the RRB to establish EGHP coverage for a qualified railroad retirement beneficiary. Completion of the forms is required to obtain a benefit. One response is requested of each respondent.

The RRB proposes revisions to Forms AA–6, AA–7 and AA–8 to incorporate a new item needed to determine eligibility due to the 5-year vesting provision under the Railroad Retirement and Income Security Act of 2001. No changes were proposed to Form RL–311–F. The RRB estimates that 180 Form AA–6's, 50 Form AA–7's, and 10 Form AA–8's are completed annually. The completion time for Forms AA–6, AA–7 and AA–8 is estimated at 8 minutes. The completion time for Form RL–311–F is estimated at 10 minutes. The RRB estimates that 800 RL–311–F's are completed annually.

Additional Information or Comments: To request more information or to obtain a copy of the information collection justification, forms, and/or supporting material, please call the RRB Clearance Officer at (312) 751–3363. Comments regarding the information collection should be addressed to Ronald J. Hodapp, Railroad Retirement Board, 844 North Rush Street, Chicago, Illinois 60611–2092. Written comments should be received within 60 days of this notice.

Chuck Mierzwa,

Clearance Officer.

[FR Doc. 02–16179 Filed 6–26–02; 8:45 am]

BILLING CODE 7095–01–M

RAILROAD RETIREMENT BOARD

Proposed collection; comment request

SUMMARY: In accordance with the requirement of Section 3506(c)(2)(A) of

the Paperwork Reduction Act of 1995 which provides opportunity for public comment on new or revised data collections, the Railroad Retirement Board (RRB) will publish periodic summaries of proposed data collections.

Comments are invited on: (a) Whether the proposed information collection is necessary for the proper performance of the functions of the agency, including whether the information has practical utility; (b) the accuracy of the RRB's estimate of the burden of the collection of the information; (c) ways to enhance the quality, utility, and clarity of the information to be collected; and (d) ways to minimize the burden related to the collection of information on respondents, including the use of automated collection techniques or other forms of information technology.

Title and Purpose of information collection:

Continuing Disability Report; OMB 3220–0187

Under Section 2 of the Railroad Retirement Act, an annuity is not payable or is reduced for any month in which the annuitant works for a railroad or earns more than prescribed dollar amounts from either non-railroad employment or self-employment. Certain types of work may indicate an annuitant's recovery from disability. The provisions relating to the reduction or non-payment of annuities by reasons of work and an annuitant's recovery from disability for work are prescribed in 20 CFR 220.17–220.20. The RRB conducts continuing disability reviews (CDR) to determine whether annuitants continue to meet the disability requirements of the law. Provisions relating to when and how often the RRB conducts CDR's are prescribed in 20 CFR 220.186.

Form G–254, *Continuing Disability Report,* is currently used by the RRB to develop information for CDR determinations, including determinations prompted by a report of work, return of railroad service, allegations of medical improvement, or routine disability call-up. The RRB proposes to modify an item that requests earnings information on Form G–254. The current version requests earnings information on specific months in which a disability annuitant earns more than a specified amount. The proposed version will request all earnings information over a specified period of time. Non-burden impacting editorial and formatting changes to Form G–254 for clarification purposes are also proposed.

Form G–254a, *Continuing Disability Update Report,* is used to help identify disability annuitants whose work activity and/or recent medical history warrants a more extensive review and thus completion of Form G–254. The RRB proposes non-burden impacting editorial and formatting changes to Form G–254a for clarification purposes.

One response is requested of each respondent to Form G–254 and G–254a. Completion is required to retain a benefit.

The estimated annual respondent burden is as follows:

ESTIMATE OF ANNUAL RESPONDENT BURDEN

Form #(s)	Annual responses	Time (min)	Burden (hrs)
G–254	1,500	5–55	956
G–254a	1,500	5	125

Additional Information or Comments: To request more information or to obtain a copy of the information collection justification, forms, and/or supporting material, please call the RRB Clearance Officer at (312) 751–3363. Comments regarding the information collection should be addressed to Ronald J. Hodapp, Railroad Retirement Board, 844 N. Rush Street, Chicago, Illinois 60611–2092. Written comments should be received within 60 days of this notice.

Chuck Mierzwa,

Clearance Officer.

[FR Doc. 02–16216 Filed 6–26–02; 8:45 am]

BILLING CODE 7905–01–M

SECURITIES AND EXCHANGE COMMISSION

[Release No. IC–25620; File No. 812–12769]

Jackson National Life Insurance Company of New York, et al.; Notice of Application

AGENCY: Securities and Exchange Commission (''SEC'' or ''Commission'').

ACTION: Notice of Application for an order under Section 6(c) of the Investment Company Act of 1940 (the ''Act'') granting exemptions from the provisions of Sections 2(a)(32) and 27(i)(2)(A) of the Act and Rule 22c–1 thereunder to permit the recapture of contract enhancements applied to purchase payments made under certain deferred variable annuity contracts.

APPLICANTS: Jackson National Life Insurance Company of New York (''Jackson National''), JNLNY Separate Account—I (the ''Separate Account'') and Jackson National Life Distributors, Inc. (''Distributor,'' and collectively, ''Applicants'').

SUMMARY OF APPLICATION: Applicants seek an order under Section 6(c) of the Act to the extent necessary to permit the recapture, under specified circumstances, of certain contract enhancements applied to purchase payments made under the deferred variable annuity contracts described herein that Jackson National will issue through the Separate Account (the ''Contracts''), as well as other contracts that Jackson National may issue in the future through their existing or future separate accounts (''Other Accounts'') that are substantially similar in all material respects to the Contracts (''Future Contracts''). Applicants also request that the order being sought extend to any other National Association of Securities Dealers, Inc. (''NASD'') member broker-dealer controlling or controlled by, or under common control with, Jackson National, whether existing or created in the future, that serves as distributor or principal underwriter for the Contracts or Future Contracts (''Affiliated Broker-Dealers''), and any successors in interest to the Applicants.

FILING DATE: The Application was filed on January 25, 2002 and amended on April 26, 2002.

HEARING OR NOTIFICATION OF HEARING: An order granting the application will be issued unless the Commission orders a hearing. Interested persons may request a hearing by writing to the Secretary of the Commission and serving Applicants with a copy of the request, in person or by mails. Hearing requests should be received by the Commission by 5:30 p.m. on July 12, 2002, and should be accompanied by proof of service on the Applicants, in the form of an affidavit or, for lawyers, a certificate of service. Hearing requests should state the nature of the writer's interest, the reason for the request, and the issues contested. Persons who wish to be notified of a hearing may request notification by writing to the Secretary of the Commission.

ADDRESSES: Secretary, Securities and Exchange Commission, 450 Fifth Street, NW, Washington, DC 20549–0609. Applicants, Jackson National Life Insurance Company, 1 Corporate Way, Lansing, Michigan 48951, Attn: Susan Rhee, Esq.; copies to Joan E. Boros, Esq., Jorden Burt LLP, 1025 Thomas Jefferson Street, NW, Suite 400 East, Washington, DC 20007–0805.

FOR FURTHER INFORMATION CONTACT: Harry Eisentein, Senior Counsel, at (202) 942–0552, or William J. Kotapish,

Assistant Director, at (202) 942–0670, Office of Insurance Products, Division of Investment Management.

SUPPLEMENTARY INFORMATION: The following is a summary of the application. The complete application is available for a fee from the SEC's Public Reference Branch, 450 Fifth Street, NW, Washington, DC 20549–0102 ((202) 942–8090).

Applicants' Representations

1. Jackson National is a stock life insurance company organized under the laws of the state of New York in July 1995. Its legal domicile and principal business address is 12900 Westchester Avenue, Purchase, New York 10577. Jackson National is admitted to conduct life insurance and annuity business in the Delaware, Michigan and New York. Jackson National is ultimately a wholly-owned subsidiary of Prudential plc (London, England).

2. The Separate Account was established by Jackson National on September 12, 1997, pursuant to the provisions of New York law and the authority granted under a resolution of Jackson National's Board of Directors. Jackson National is the depositor of the Separate Account. The Separate Account meets the definition of a ''separate account'' under the federal securities laws and is registered with the Commission as a unit investment trust under the Act (File No. 811–08401). The Separate Account will fund the variable benefits available under the Contracts. The offering of the Contracts will be registered under the Securities Act of 1933 (the ''1933 Act'').

3. The Distributor is a wholly-owned subsidiary of Jackson National and serve as the distributor of the Contracts. The Distributor is registered with the Commission as a broker-dealer under the Securities Exchange Act of 1934 (the ''1934 Act'') and is a member of the NASD. The Distributor enters into selling group agreements with affiliated and unaffiliated broker-dealers. The Contracts are sold by licensed insurance agents, where the Contracts may be lawfully sold, who are registered representatives of broker-dealer that are registered under the 1934 Act and are members of the NASD.

4. The Contracts require a minimum initial payment of $10,000 under most circumstances ($2,000 for a qualified plan contract). Subsequent payments may be made at any time during the accumulation phase. Each subsequent payment must be at least $500 ($50 under an automatic payment plan). Prior approval by Jackson National is required for aggregate premium payments of over $1,000,000.

5. The Contracts permit owners to accumulate contract values on a fixed basis through allocations to the Guaranteed Fixed Accounts (''Fixed Account'') which offers guaranteed crediting rates for a specified period for one year. Guaranteed periods of other durations may be added from time to time.

6. The Contracts also permit owners to accumulate contract values on a variable basis, through allocations to one or more of the investment divisions of the Separate Account (the ''Investment Divisions,'' collectively with the Fixed Accounts, the ''Allocation Options''). 43 Investment Divisions are expected to be offered under the Contracts, but additional Investment Divisions may be offered in the future and some of those currently expected to be offered could be eliminated or combined with other Investment Divisions in the future. Similarly, Future Contracts may offer additional or different Investment Divisions.

7. Transfers among the Investment Divisions are permitted. The first 15 transfers in a contract year are free; subsequent transfers cost $25. Certain transfers to, from and among the Fixed Account are also permitted during the Contract's accumulation phase, but are subject to certain adjustments and limitations. Dollar cost averaging and rebalancing transfers are offered at no charge and do not count against the 15 free transfers permitted each year.

8. If the optional Contract Enhancement endorsement is elected, each time an owner makes a premium payment during the first contract year, Jackson National will add an additional amount to the owner's contract value (a ''Contract Enhancement''). All Contract Enhancements are paid from Jackson National's general account assets. The Contract Enhancement is equal to two percent of the premium payment. Jackson National will allocate the Contract Enhancement to the Guaranteed Accounts and/or Investment Divisions in the same proportion as the premium payment allocation. The Contract Enhancement is not credited to any premiums received after the first contract year.

9. There is an asset-based charge for each of the Contract Enhancements. The Contract Enhancement has a 0.67% charge that applies for three years. These charges will also be assessed against any amounts an owner has allocated to the Fixed Account, resulting in a credited interest rate of 0.67% less than the annual credited interest rate that would apply to the Fixed Account if the Contract Enhancement had not been elected. However, the interest rate will never go below three percent.

10. Jackson National will recapture all or a portion of any Contract Enhancements, regardless of a decline value, by imposing a recapture charge whenever an owner; (i) makes a total withdrawal within the recapture charge period (three years after a first year payment) or a partial withdrawal of corresponding premiums within the recapture charge period in excess of those permitted under the Contracts' free withdrawal provisions, unless the withdrawal is made for certain health-related emergencies specified in the Contracts; (ii) elects to receive payments under in income option within the recapture charge period; or (iii) returns the Contract during the free look period.

11. The amount of the recapture charge varies, depending upon when the charge is imposed, as follows:

CONTRACT ENHANCEMENT RECAPTURE CHARGE

[As a percentage of first year premium payments]

Completed Years Since Receipt of Premium	*0*	*1*	*2*	*3+*
Recapture Charge (%)	2	1.5	.75	0

12. The recapture charge percentage will be applied to the corresponding premium reflected in the amount withdrawn or the amount applied to income payments that means subject to a withdrawal charge. Recapture charges only apply to premiums received in the first Contract Year.

13. Recapture charges will be waived upon death or exercise of a Nursing Home claim. Recapture charges will be waived on minimum required distributions. Recapture charges will be applied upon annuitization, even in a situation where the Withdrawal Charge is waive. The amount recaptured will be taken from the Investment Divisions and the Fixed Account in the same proportion as the withdrawal charge. Partial withdrawals will be deemed to remove premium payments on a first-in-first-out basis (the order that entails payment of the lowest withdrawal and recapture charges).

14. Jackson National does not assess the recapture charge on any payments paid out as: death benefits; withdrawals necessary to satisfy the minimum distribution requirements of the Internal Revenue Code; if permitted by the owner's state, withdrawals of up to $250,000 from the Fixed Account in connection with the owner's terminal

illness or if the owner needs extended hospital or nursing home care as provided in the Contract.

15. The contract value will reflect any gains or losses attributable to a Contract Enhancement described above. Contract Enhancements, and any gains or losses attributable to a Contract Enhancement, distributed under the Contract will be considered earnings under the Contract for tax purposes and for purposes of calculating free withdrawal amounts.

16. The Contracts have a ''free look'' period of twenty days after the owner receives the Contract. Contract value, without the deduction for any sales charges, is returned upon exercise of free look rights by an owner unless state law required the return of premiums paid. The Contract Enhancement recapture charge reduces the amount returned.

17. In addition to the Contract Enhancement charges and the Contract Enhancement recapture charges, the Contracts have the following charges: mortality and expense risk charge of 1.50% for the first six years and 1.30% thereafter (each as an annual percentage of average daily account value); administration charge of 0.15% (as an annual percentage of average daily account value); contract maintenance charge of $35 per year (waived if contract value is $50,000 or more at the time that charge is imposed); transfer fee of $25 for each transfer in excess of 15 in a contract year (for purposes of which dollar cost averaging and rebalancing transfer are excluded); a commutation fee that applies only upon withdrawals from income payments for a fixed period; and a withdrawal charge that applies to total withdrawals, to certain partial withdrawals, and on the income date (the date income payments commence) if the income date is within 13 months of the date the Contract was issued.

18. In addition, the contracts have certain other charges for various optional features. These include an Earnings Protection Benefit charge of 0.30% (as an annual percentage of daily account value) and an optional death benefit charge of 0.15% (as an annual percentage of daily account value).

19. The withdrawal charge for the Contracts varies, depending upon the contribution year of the premium withdrawn as follows:

WITHDRAWAL CHARGE

[As a percentage of premium payments]

Completed Years Since Receipt of Premium	0	1	2	3+
Withdrawal Charge (%)	8	7	6	0

20. The withdrawal charge is waived upon withdrawals to satisfy the minimum distribution requirements of the Internal Revenue Code and, to the extent permitted by state law, the withdrawal fee is waived in connection with withdrawals of up of $250,000 from the Investment Divisions or the Guaranteed Fixed Accounts of the Contracts in connection with the terminal illness of the owner of a Contract, or in connection with extended hospital or nursing home care for the owner.

Applicants' Legal Analysis

1. Section 6(c) of the Act authorizes the Commission to exempt any person, security or transaction, or any class or classes of persons, securities or transactions from the provisions of the Act and the rules promulgated thereunder if and to the extent that such exemption is necessary or appropriate in the public interest and consistent with the protection of investors and the purposes fairly intended by the policy and provisions of the Act. Applicants request that the Commission pursuant to Section 6(c) of the Act grant the exemptions requested below with respect to the Contracts and any Future Contracts funded by the Separate Account or Other Accounts that are issued by Jackson National and underwritten or distributed by the Distributor or Affiliated Broker-Dealers. Applicants undertake that Future Contracts funded by the Separate Account or Other Accounts, in the future, will be substantially similar in all material respects to the Contracts. Applicants believe that the requested exemptions are appropriate in the public interest and consistent with the protection of investors and the purposes fairly intended by the policy and provisions of the Act.

2. Subsection (i) of Section 27 of the Act provides that Section 27 does not apply to any registered separate account funding variable insurance contracts, or to the sponsoring insurance company and principal underwriter of such account, except as provided in paragraph (2) of the subsection. Paragraph (2) provides that it shall be unlawful for such a separate account or sponsoring insurance company to sell a contract funded by the registered separate account unless such contract is a redeemable security. Section 2(a)(32) defines ''redeemable security'' as any security, other than short-term paper, under the terms of which the holder, upon presentation to the issuer, is entitled to receive approximately his proportionate share of the issuer's current net assets, or the cash equivalent thereof.

3. Applicants submit that the recapture of the Contract Enhancement in the circumstances set forth in the application would not deprive an owner of his or her proportionate share of the issuer's current net assets. A Contract owner's interest in the amount of the Contract Enhancement allocated to his or her Contract value upon receipt of a premium payment is not fully vested until three complete years following a premium. Until or unless the amount of any Contract Enhancement is vested, Jackson National retains the right and interest in the Contract Enhancement amount, although not in the earnings attributable to that amount. Thus, Applicants urge that when Jackson National recaptures any Contract Enhancement it is simply retrieving its own assets, and because a Contract owner's interest in the Contract Enhancement is not vested, the Contract owner has not been deprived of a proportionate share of the Separate Account's assets, *i.e.,* a share of the Separate Account's assets proportionate to the Contract owner's contract value.

4. In addition, Applicants state that it would be patently unfair to allow a Contract owner exercising the free-look privilege to retain the Contract Enhancement amount under a Contract that has been returned for a refund after a period of only a few days. If Jackson National could not recapture the Contract Enhancement, Applicants claim that individuals could purchase a Contract with no intention of retaining it and simply return it for a quick profit. Furthermore, Applicants state that the recapture of the Contract Enhancement relating to withdrawals or receiving income payments within the first three years of a premium contribution is designed to protect Jackson National against Contract owners not holding the Contract for a sufficient time period. According to Applicants, it would provide Jackson National with insufficient time to recover the cost of the Contract Enhancement, to its financial detriment.

5. Applicants represent that it is not administratively feasible to track the Contract Enhancement amount in the Separate Accounts after the Contract Enhancement(s) is applied. Accordingly, the asset-based charges applicable to the Separate Accounts will be assessed against the entire amounts held in the Separate Accounts,

including any Contract Enhancement amounts. As a result, the aggregate asset-based charges assessed will be higher than those that would be charged if the Contract owner's Contract value did not include any Contract Enhancement. Jackson National nonetheless represents that the Contracts' fees and charges, in the aggregate, are reasonable in relation to service rendered, the expenses expected to be incurred, and the risks assumed by Jackson National.

6. Applicants submit that the provisions for recapture of any Contract Enhancement under the Contracts do not violate Sections 2(a)(32) and 27(i)(2)(A) of the Act. Applicants assert that the application of a Contract Enhancement to premium payments made under the Contracts should not raise any questions as to compliance by Jackson National with the provisions of Section 27(i). However, to avoid any uncertainty as to full compliance with the Act, Applicants request an exemption from Sections 2(a)(32) and 27(i)(2)(A), to the extent deemed necessary, to permit the recapture of any Contract Enhancement under the circumstances described in the Application, without the loss of relief from Section 27 provided by Section 27(i).

7. Section 22(c) of the Act authorizes the Commission to make rules and regulations applicable to registered investment companies and to principal underwriters of, and dealers in, the redeemable securities of any registered investment company to accomplish the same purposes as contemplated by Section 22(a). Rule 22c–1 under the Act prohibits a registered investment company issuing an redeemable security, a person designated in such issuer's prospectus as authorized to consummate transactions in any such security, and a principal underwriter of, or dealer in, such security, from selling, redeeming, or repurchasing any such security except at a price based on the current net asset value of such security which is next computed after receipt of a tender of such security for redemption or of an order to purchase or sell such security.

8. It is possible that someone might view Jackson National's recapture of the Contract Enhancements as resulting in the redemption of redeemable securities for a price other than one based on the current net asset value of the Separate Accounts. Applicants contend, however, that the recapture of the Contract Enhancement does not violate Rule 22c–1. The recapture of some or all of the Contract Enhancement does not involve either of the evils that Rule 22c–1 was intended to eliminate or reduce as far as reasonably practicable, namely: (i) the dilution of the value of outstanding redeemable securities of registered investment companies through their sale at a price below net asset value or repurchase at a price above it; and (ii) other unfair results, including speculative trading practices. To effect a recapture of a Contract Enhancement, Jackson National will redeem interests in a Contract owner's Contract value at a price determined on the basis of the current net asset value of the Separate Accounts. The amount recaputr4ed will be less than or equal to the amount of the Contract Enhancement that Jackson National paid out of its general account assets. Although Contract owners will be entitled to retain any investment gains attributable to the Contract Enhancement and to bear any investment losses attributable to the Contract Enhancement, the amount of such gains or losses will be determined on the basis of the current net asset values of the Separate Accounts. Thus, no dilution will occur upon the recapture of the Contract Enhancement. Applicants also submit that the second harm that Rule 22c–1 was designed to address, namely, speculative trading practices calculated to take advantage of backward pricing, will not occur as a result of the recapture of the Contract Enhancement. Applicants assert that, because neither of the harms that Rule 22c–1 was meant to address is found in the recapture of the Contract Enhancement, Rule 22c–1 should not apply to any Contract Enhancement. However, to avoid any uncertainty as to full compliance with Rule 22c–1, Applicants request an exemption from the provisions of Rule 22c–1 to the extent deemed necessary to permit them to recapture the Contract Enhancement under the Contracts.

9. Applicants submit that extending the requested relief to encompass Future Contracts and Other/Accounts is appropriate in the public interest because it promotes competitiveness in the variable annuity market by eliminating the need to file redundant exemptive applications prior to introducing new variable annuity contracts. Applicants assert that investors would receive no benefit or additional protection by requiring Applicants to repeatedly seek exemptive relief that would present no issues under the Act not already addressed in the Application.

Applicants further submit, for the reasons stated herein, that their exemptive request meets the standards set out in Section 6(c) of the Act, namely, that the exemptions requested are necessary or appropriate in the public interest and consistent with the protection of investors and the purposes fairly intended by the policy and provisions of the Act and that, therefore, the Commission should grant the requested order.

For the Commission, by the Division of Investment Management, pursuant to delegated authority.

Margaret H. McFarland,

Deputy Secretary.

[FR Doc. 02–16209 Filed 6–26–02; 8:45 am]

BILLING CODE 8010–01–M

SECURITIES AND EXCHANGE COMMISSION

Sunshine Act Meetings

Notice is hereby given, pursuant to the provisions of the Government in the Sunshine Act, Pub. L. 94–409, that the Securities and Exchange Commission will hold the following meetings during the week of July 1, 2002:

A Closed Meeting will be held on Monday, July 1, 2002, at 1:00 p.m., and an Open Meeting will be held on Tuesday, July 2, 2002, at 1:00 p.m., in Room 1C30, the William O. Douglas Room.

Commissioner Hunt, as duty officer, determined that no earlier notice thereof was possible.

Commissioners, Counsel to the Commissioners, the Secretary to the Commission, and recording secretaries will attend the closed meeting. Certain staff members who have an interest in the matters may also be present.

The General Counsel of the Commission, or his designee, has certified that, in his opinion, one or more of the exemptions set forth in 5 U.S.C. 552b(c)(3), (5), (7), (9)(B), and (10) and 17 CFR 200.402(a)(3), (5), (7), (9)(ii) and (10), permit consideration of the scheduled matters at the closed meeting.

The subject matter of the Closed Meeting scheduled for Monday, July 1, 2002, will be:

Formal orders of investigation;
Institution and settlement of injunctive actions;
Institution and settlement of administrative proceedings of an enforcement nature; and
Opinion.

The subject matter of the Open Meeting scheduled for Tuesday, July 2, 2002, will be:

1. The Commission will consider whether to adopt amendments to Rule 31–1 under the Securities Exchange Act of 1934 to clarify how to calculate

assessments that are required to be paid by national securities exchanges and national securities associations pursuant to Section 31(d) of the Exchange Act for security futures transactions. The proposed amendments to Rule 31–1 also provide guidance on how to calculate fees that are required to be paid by national securities exchanges and national securities associations pursuant to Sections 31(b) and (c) of the Exchange Act, respectively, for sales of securities that result from the physical settlement of security futures.

2. The Commission will consider proposed rules to be issued jointly by the Commission and the Department of the Treasury implementing section 326 of the Uniting and Strengthening America by Providing Appropriate Tools Required to Intercept and Obstruct Terrorism Act of 2001. Section 326 requires the Secretary of the Treasury to jointly prescribe with the Commission regulations that, at a minimum, require broker-dealers and mutual funds to implement reasonable procedures to (1) verify the identity of any person seeking to open an account, to the extent reasonable and practicable, (2) maintain records of the information used to verify the person's identity, and (3) determine whether the person appears on any lists of known or suspected terrorists or terrorist organizations provided to the broker-dealer or mutual fund by any government agency.

At times, changes in Commission priorities require alterations in the scheduling of meeting items. For further information and to ascertain what, if any, matters have been added, deleted or postponed, please contact: The Office of the Secretary at (202) 942–7070.

Dated: June 25, 2002.

Margaret H. McFarland,

Deputy Secretary.

[FR Doc. 02–16345 Filed 6–25–02; 11:58 am]

BILLING CODE 8010–01–P

SECURITIES AND EXCHANGE COMMISSION

[Release No. 34–46097; File No. SR–NASD–2002–69]

Self-Regulatory Organizations; Notice of Filing of Proposed Rule Change by National Association of Securities Dealers, Inc. Relating to Posting of Margin Disclosure and Day-Trading Risk Disclosure Statements on Web Sites

June 20, 2002.

Pursuant to Section 19(b)(1) of the Securities Exchange Act of 1934 (''Act'')[1] and Rule 19b–4 thereunder,[2] notice is hereby given that on May 30, 2002, the National Association of Securities Dealers, Inc. (''NASD'' or ''Association''), through its wholly owned subsidiary, NASD Regulation, Inc. (''NASD Regulation''), filed with the Securities and Exchange Commission (''SEC'' or ''Commission'') the proposed rule change as described in Items I, II, and III below, which Items have been prepared by NASD Regulation. The Commission is publishing this notice to solicit comments on the proposed rule change from interested persons.

I. Self-Regulatory Organization's Statement of the Terms of Substance of the Proposed Rule Change

NASD Regulation is proposing to amend NASD Rules 2341 and 2361 to require the posting of certain investor disclosure statements on members' Web sites. Specifically, the proposed rule change would amend: (1) Rule 2341 (Margin Disclosure Statement) to require members that permit customers to open accounts on-line or to engage in transactions in securities on-line to post the margin disclosure statement on their Web sites; and (2) Rule 2361 (Day-Trading Risk Disclosure Statement) to require members that promote a day-trading strategy to post the day-trading risk disclosure statement on their Web sites. Below is the text of the proposed rule change. Proposed new language is in italics; proposed deletions are in brackets.

2341. Margin Disclosure Statement

(a) No member shall open a margin account, as specified in Regulation T of the Board of Governors of the Federal Reserve System, for or on behalf of a non-institutional customer, unless, prior to or at the time of opening the account, the member has furnished to the customer, individually, in writing or electronically, and in a separate document, the [following] margin disclosure statement[:] *specified in this paragraph (a). In addition, any member that permits non-institutional customers either to open accounts on-line or to engage in transactions in securities on-line must post such margin disclosure statement on the member's Web site in a clear and conspicuous manner.*

Margin Disclosure Statement

Your brokerage firm is furnishing this document to you to provide some basic facts about purchasing securities on margin, and to alert you to the risks involved with trading securities in a margin account. Before trading stocks in a margin account, you should carefully review the margin agreement provided by your firm. Consult your firm regarding any questions or concerns you may have with your margin accounts.

When you purchase securities, you may pay for the securities in full or you may borrow part of the purchase price from your brokerage firm. If you choose to borrow funds from your firm, you will open a margin account with the firm. The securities purchased are the firm's collateral for the loan to you. If the securities in your account decline in value, so does the value of the collateral supporting your loan, and, as a result, the firm can take action, such as issue a margin call and/or sell securities or other assets in any of your accounts held with the member, in order to maintain the required equity in the account.

It is important that you fully understand the risks involved in trading securities on margin. These risks include the following:

- *You can lose more funds than you deposit in the margin account.* A decline in the value of securities that are purchased on margin may require you to provide additional funds to the firm that has made the loan to avoid the forced sale of those securities or other securities or assets in your account(s).
- *The firm can force the sale of securities or other assets in your account(s).* If the equity in your account falls below the maintenance margin requirements, or the firm's higher ''house'' requirements, the firm can sell the securities or other assets in any of your account held at the firm to cover the margin deficiency. You also will be responsible for any short fall in the account after such a sale.
- *The firm can sell your securities or other assets without contacting you.* Some investors mistakenly believe that a firm must contact them for a margin call to be valid, and that the firm cannot liquidate securities or other assets in their accounts to meet the call unless the firm has contacted them first. This is not the case. Most firms will attempt to notify their customers of margin calls, but they are not required to do so. However, even if a firm has contacted a customer and provided a specific date by which the customer can meet a margin call, the firm can still take necessary steps to protect its financial interests, including immediately selling the securities without notice to the customer.
- *You are not entitled to choose which securities or other assets in your account(s) are liquidated or sold to meet a margin call.* Because the securities are

[1] 15 U.S.C. 78s(b)(1).

[2] 17 CFR 240.19b–4.

collateral for the margin loan, the firm has the right to decide which security to sell in order to protect its interests.

• *The firm can increase its ''house'' maintenance margin requirements at any time and is not required to provide you advance written notice.* These changes in firm policy often take effect immediately and may result in the issuance of a maintenance margin call. Your failure to satisfy the call may cause the member to liquidate or sell securities in your account(s).

• *You are not entitled to an extension of time on a margin call.* While an extension of time to meet margin requirements may be available to customers under certain conditions, a customer does not have a right to the extension.

* * * * *

(c) In lieu of providing the disclosures specified in paragraphs (a) and (b), a member may provide to the customer *and, to the extent required under paragraph (a) post on its Web site,* an alternative disclosure statement, provided that the alternative disclosures shall be substantially similar to the disclosures specified in paragraph*s* (a) and (b).

* * * * *

2361. Day-Trading Risk Disclosure Statement

(a) Except as provided in paragraph (b), no member that is promoting a day-trading strategy, directly or indirectly, shall open an account for or on behalf of a non-institutional customer unless, prior to opening the account, the member has furnished to each customer, individually, in writing or electronically, the [following] disclosure statement[;] *specified in this paragraph (a). In addition, any member that is promoting a day-trading strategy, directly or indirectly, must post such disclosure statement on the member's Web site in a clear and conspicuous manner.*

Day-Trading Risk Disclosure Statement

You should consider the following points before engaging in a day-trading strategy. For purposes of this notice, a ''day-trading strategy'' means an overall trading strategy characterized by the regular transmission by a customer of intra-day orders to effect both purchase and sale transactions in the same security or securities.

Day-trading can be extremely risky. Day-trading generally is not appropriate for someone of limited resources and limited investment or trading experience and low risk tolerance. You should be prepared to lose all of the funds that you use for day-trading. In particular, you should not fund day-trading activities with retirement savings, student loans, second mortgages, emergency funds, funds set aside for purposes such as education or home ownership, or funds required to meet your living expenses. Further, certain evidence indicates that an investment of less than $50,000 will significantly impair the ability of a day trader to make a profit. Of course, an investment of $50,000 or more will in no way guarantee success.

Be cautious of claims of large profits from day-trading. You should be wary of advertisements or other statements that emphasize the potential for large profits in day-trading. Day-trading can also lead to large and immediate financial losses.

Day-trading requires knowledge of securities markets. Day-trading requires in-depth knowledge of the securities markets and trading techniques and strategies. In attempting to profit through day-trading, you must compete with professional, licensed traders employed by securities firms. You should have appropriate experience before engaging in day-trading.

Day-trading requires knowledge of a firm's operations. You should be familiar with a securities firm's business practices, including the operation of the firm's order execution systems and procedures. Under certain market conditions, you may find it difficult or impossible to liquidate a position quickly at a reasonable price. This can occur, for example, when the market for a stock suddenly drops, or if trading is halted due to recent news events or unusual trading activity. The more volatile a stock is, the greater the likelihood that problems may be encountered in executing a transaction. In addition to normal market risks, you may experience losses due to system failures.

Day-trading will generate substantial commissions, even if the per trade cost is low. Day-trading involves aggressive trading, and generally you will pay commissions on each trade. The total daily commissions that you pay on your trades will add to your losses or significantly reduce your earnings. For instance, assuming that a trade costs $16 and an average of 29 transactions are conducted per day, an investor would need to generate an annual profit of $111,360 just to cover commission expenses.

Day-trading on margin or short selling may result in losses beyond your initial investment. When you day trade with funds borrowed from a firm or someone else, you can lose more than the funds you originally placed at risk. A decline in the value of the securities that are purchased may require you to provide additional funds to the firm to avoid the forced sale of those securities or other securities in your account. Short selling as part of your day-trading strategy also may lead to extraordinary losses, because you may have to purchase a stock at a very high price in order to cover a short position.

Potential Registration Requirements. Persons providing investment advice for others or managing securities accounts for others may need to register as either an ''Investment Advisor'' under the Investment Advisors Act of 1940 or as a ''Broker'' or ''Dealer'' under the Securities Exchange Act of 1934. Such activities may also trigger state registration requirements.

(b) In lieu of providing the disclosure statement specified in paragraph (a), a member that is promoting a day-trading strategy may provide to the customer, individually, in writing or electronically, prior to opening the account, *and post on its Web site,* an alternative disclosure statement, provided that:

(1) The alternative disclosure statement shall be substantially similar to the disclosure statement specified in paragraph (a); and

(2) The alternative disclosure statement shall be filed with the Association's Advertising Department (Department) for review at least 10 days prior to use (or such shorter period as the Department may allow in particular circumstances) for approval and, if changes are recommended by the Association, shall be withheld from use until any changes specified by the Association have been made or, if expressly disapproved, until the alternative disclosure statement has been refiled for, and has received, Association approval. The member must provide with each filing the anticipated date of first use.

* * * * *

II. Self-Regulatory Organization's Statement of the Purpose of, and Statutory Basis for, the Proposed Rule Change

In its filing with the Commission, NASD Regulation included statements concerning the purpose of and basis for the proposed rule change and discussed any comments it received on the proposed rule change. The text of these statements may be examined at the places specified in Item IV below. NASD Regulation has prepared summaries, set forth in Sections A, B, and C below, of the most significant aspects of such statements.

A. Self-Regulatory Organization's Statement of the Purpose of, and Statutory Basis for, the Proposed Rule Change

1. Purpose

Introduction

Rules 2341 and 2361 were developed to provide investors with additional and specific risk disclosures concerning margin and day-trading, respectively. Rule 2341, which was adopted in April 2001,[3] is designed to provide investors with information concerning the operation and risks associated with margin trading. NASD Regulation believed that investors' misconceptions about margin requirements, particularly with respect to maintenance margin, could cause investors to underestimate the risks of margin trading and to misunderstand the operation of and reasons for margin calls. Accordingly, NASD Regulation adopted Rule 2341 requiring members to deliver to non-institutional customers a specified disclosure statement that discusses the operation of margin accounts and the risks associated with trading on margin. Each member is required to deliver the margin disclosure statement to the customer prior to or at the opening of a margin account. Rule 2341 also requires that the margin disclosure statement, or an abbreviated version of the statement as set forth in the Rule, be provided to margin customers annually.

Rule 2361, which was adopted in July 2000,[4] is designed to provide investors with information concerning unique risks arising from day-trading activities. Rule 2361 requires firms promoting a day-trading strategy to provide their non-institutional customers with a day-trading risk disclosure statement prior to opening an account. The day-trading risk disclosure statement discusses several factors that a customer should consider before engaging in day-trading, including that the customer should be prepared to lose all of the funds that he or she uses for day-trading and that day-trading on margin may result in losses beyond the initial investment.

Both Rules further permit member firms to develop an alternative disclosure statement substantially similar to the ones provided in the Rules. In the case of Rule 2361, the alternate day-trading risk disclosure statement must be filed with, and approved by, NASD Regulation's Advertising Department.

Posting of Disclosure Statements on Web Sites

While Rules 2341 and 2361 currently require that the disclosure statements be delivered individually to each covered customer, either in writing or electronically, the Rules do not require firms to post the statements on their Web sites. Rather, in developing Rules 2341 and 2361, NASD Regulation focused on ensuring that each individual investor received the required risk disclosure statements. NASD Regulation believed that mandating specific delivery of the risk disclosure statements would be the most effective means of ensuring that customers received the required disclosures.

In 2001, following the adoption of Rule 2341 and Rule 2361, the General Accounting Office (''GAO'') issued a report that discusses, among other things, actions taken by securities industry regulators to address on-line trading issues.[5] The 2001 GAO Report recognized that Rules 2341 and 2361 require broker/dealers to furnish investors with certain key investor protection disclosures. It also noted that the margin disclosure statement required under Rule 2341 provides substantial information that is very helpful to investors to understand the risks of trading on margin. The GAO expressed concern, however, that while customers covered by Rules 2341 and 2361 were receiving the margin and day-trading risk disclosure statements, additional benefits could be achieved if the disclosures also were provided on-line, noting that many investors who trade on-line may prefer to review information in that medium and that a Web site posing also would make the information available to other on-line investors who are thinking about engaging in the activities covered by the disclosure statements. In this regard, the 2001 GAO Report recommended that the SEC take steps to ensure broker/dealers disclose additional information on their Web sites regarding, among other things, margin requirements and trading risks.[6]

While many firms currently post the margin and day-trading risk disclosure statements on their Web sites on a voluntary basis, NASD Regulation believes that the investing public could further benefit from the information contained in the statements if additional on-line and day-trading firms were to post them on their Web sites. Accordingly, NASD Regulation is proposing this rule change which will address the GAO's recommendations and enable a broader array of persons to review the information regarding margin requirements and day-trading risks contained in the mandated disclosure statements.

Consistent with the general recommendations raised in the GAO Reports, the proposed rule change would amend: (1) Rule 2341 to require member firms that permit customers to open accounts on-line or to engage in transactions in securities on-line to post the margin disclosure statement on their Web sites; and (2) Rule 2361 to require member firms that promote a day-trading strategy, directly or indirectly, to post the day-trading risk disclosure statement on their Web sites. The firms would be required to post the statements specified in Rules 2341 or 2361, as applicable, or the alternate statements permitted by the Rules. Under the proposal, the disclosure statements must be displayed on the Web site in a ''clear and conspicuous manner,'' or in a clearly identified location that is readily accessible to investors. While compliance with the ''clear and conspicuous'' standard would be based on the facts and circumstances surrounding each member's Web site, NASD Regulation's primary concern is that firms not post the disclosure statements in a remote place on their Web sites, where investors or potential investors would be unlikely to locate them.

Importantly, the proposed rule change does not affect a member firm's existing requirements under Rules 2341 and 2361 to deliver individually to each customer covered by the Rules, either in writing or electronically, the disclosure statements mandated under the Rules. In addition, while NASD Regulation is not at this time proposing to require on-line firms that do not promote a day-trading strategy as defined in Rule 2361 to post the day-trading risk disclosure statement in addition to the margin disclosure statement on their Web sites, NASD Regulation encourages all on-line

[3] *See* Securities Exchange Act Release No. 44223 (April 26, 2001), 66 FR 22274 (May 3, 2001).

[4] *See* Securities Exchange Act Release No. 43021 (July 10, 2000), 65 FR 44408 (July 17, 2000).

[5] *See On-Line Trading, Investor Protections Have Improved but Continued Attention is Needed,* Report to Congressional Requesters, GAO, 01–858 (July 2001) (the ''2001 GAO Report''). The 2001 GAO Report is a follow-up to a GAO report issued in 2000 (*On-Line Trading, Better Investor Protection Information Needed on Brokers' Web Sites,* Report to Congressional Requesters, GAO, General Government Division, 00–43 (May 2000) (the ''2000 GAO Report'')) that examined how on-line broker/dealers addressed investor protection issues.

[6] Similarly, noting that the SEC has determined from customer complaints it has received that many investors who traded on-line did not understand margin requirements and may not understand the risks they are taking or the rules and procedures for trading, the 2000 GAO Report also recommended that the SEC ensure that broker/dealers with on-line trading systems include certain investor protection information on their Web sites.

firms to do so. NASD Regulation believes that on-line traders may benefit from the information provided in the day-trading risk disclosure statement regardless of whether the on-line firm whose Web site the trader is visiting or using promotes a day-trading strategy.

2. Statutory Basis

NASD Regulation believes that the proposed rule change is consistent with the provisions of Section 15A(b)(6) of the Act, which requires, among other things, that the Association's rules must be designed to prevent fraudulent and manipulative acts and practices, to promote just and equitable principles of trade, and, in general, to protect investors and the public interest. NASD Regulation believes that the proposed rule change requiring certain member firms to post the margin disclosure and day-trading risk disclosure statements on their Web sites will help protect investors and the public interest in a trading environment where increasing numbers of investors are trading on-line or accessing broker/dealers through Web sites.

B. Self-Regulatory Organization's Statement on Burden on Competition

NASD Regulation does not believe that the proposed rule change will result in any burden on competition that is not necessary or appropriate in furtherance of the purposes of the Act.

C. Self-Regulatory Organization's Statement on Comments on the Proposed Rule Change Received from Members, Participants, or Others

Written comments were neither solicited nor received.

III. Date of Effectiveness of the Proposed Rule Change and Timing for Commission Action

The proposed rule change has been filed by the Association as a ''non-controversial'' rule change under Section 19(b)(3)(A) of the Act,[7] and Rule 19b–4(f)(6) thereunder.[8] Because the foregoing proposed rule change: (1) Does not significantly affect the protection of investors or the public interest; (2) does not impose any significant burden on competition; and (3) does not become operative for 30 days after the date of filing, or such shorter time as the Commission may designate if consistent with the protection of investors and the public interest, provided that NASD Regulation has given the Commission written notice of its intent to file the proposed rule change, along with a brief description and text of the proposed rule change, at least five business days prior to the date of filing of the proposed rule change, or such shorter time as designated by the Commission, the proposed rule change has become effective pursuant to Section 19(b)(3)(A) of the Act[9] thereunder.[10]

A proposed rule change filed under Rule 19b–4(f)(6)[11] requires that a self-regulatory organization give the Commission written notice of its intent to file the proposed rule change, along with a brief description and text of the proposed rule change, at least five business days prior to the date of filing the proposed rule change. However, Rule 19b–4(f)(6)(iii)[12] permits the Commission to designate a shorter time. NASD Regulation seeks to have the five-business-day pre-filing requirement waived with respect to the proposed rule change. The Commission has determined to waive the five-business-day pre-filing requirement. The Commission notes that NASD proposes to make the proposed rule change operative on July 1, 2002.

At any time within 60 days of this filing, the Commission may summarily abrogate this proposal if it appears to the Commission that such action is necessary or appropriate in the public interest, for the protection of investors, or otherwise in furtherance of the purposes of the Act.

IV. Solicitation of Comments

Interested persons are invited to submit written data, views, and arguments concerning the foregoing. Persons making written submissions should file six copies thereof with the Secretary, Securities and Exchange Commission, 450 Fifth Street, NW., Washington, DC 20549. Copies of the submission, all subsequent amendments, all written statements with respect to the proposed rule change that are filed with the Commission, and all written communications relating to the proposed rule change between the Commission and any person, other than those that may be withheld from the public in accordance with the provisions of 5 U.S.C. 552, will be available for inspection and copying in the Commission's Public Reference Room. Copies of such filing will also be available for inspection and copying at the principal office of the NASD. All submissions should refer to File No. SR–NASD–2002–69 and should be submitted by July 18, 2002.

For the Commission, by the Division of Market Regulation, pursuant to delegated authority.[13]

Margaret H. McFarland,

Deputy Secretary.

[FR Doc. 02–16257 Filed 6–26–02; 8:45 am]

BILLING CODE 8010–01–P

[7] 15 U.S.C. 78s(b)(3)(A).

[8] 17 CFR 240.19b–4(f)(6).

[9] 15 U.S.C. 78(b)(3)(A).

[10] 17 CFR 240.19b–4(f)(6).

[11] 17 CFR 240.19b–4(f)(6).

[12] 17 CFR 240.19b–4(f)(6)(iii).

[13] 17 CFR 200.30–3(a)(12).

SECURITIES AND EXCHANGE COMMISSION

[Release No. 34–46096; File No. SR–PCX–2001–17]

Self-Regulatory Organizations; Notice of Filing of Proposed Rule Change and Amendment No. 1 Thereto by the Pacific Exchange, Inc. Relating to Auto-Ex Price Improvement Incentive for Market Makers

June 20, 2002.

Pursuant to section 19(b)(1) of the Securities Exchange Act of 1934 (''Act''),[1] and Rule 19b–4 thereunder,[2] notice is hereby given that on January 16, 2002, the Pacific Exchange, Inc. (''PCX'' or ''Exchange'') filed with the Securities and Exchange Commission (''Commission'') the proposed rule change as described in Items I, II, and III below, which Items have been prepared by the Exchange. On May 3, 2002, the Exchange filed Amendment No. 1 to the proposed rule change.[3] On June 14, 2002, the Exchange filed Amendment No. 2 to the proposed rule change.[4] The Commission is publishing this notice to solicit comments on the proposed rule change, as amended, from interested persons.

I. Self-Regulatory Organization's Statement of the Terms of Substance of the Proposed Rule Change

The PCX proposes a rule change that is intended to encourage competition among Market Makers for trades on its automatic execution system for options (''Auto-Ex'') by rewarding individual

[1] 15 U.S.C. 78s(b)(1).

[2] 17 CFR 240.19b–4.

[3] *See* letter from Cindy L. Sink, Senior Attorney, Regulatory Policy, PCX, to Deborah L. Flynn, Assistant Director, Division of Market Regulation (''Division''), Commission, dated May 2, 2002 (''Amendment No. 1''). Amendment No. 1 replaced in its entirety the proposed rule text and the Exchange's statement regarding the proposed rule change.

[4] See letter from Michael D. Pierson, Vice President, Regulatory Policy, PCX, to Steven G. Johnston, Special Counsel, Division, Commission, dated June 13, 2002 (''Amendment No. 2''). Amendment No. 2 deleted language from Rule 6.87(k)(2)(c)(ii) and Commentary .04 to Rule 6.87 to reflect changes to PCX's Rules approved by the Commission.

Market Makers who improve the disseminated market.

The text of the proposed rule change is set forth below. New text is italicized.

Rule 6.87

* * * * *

(k)

* * * * *

(2) Auto-Ex Price Improvement Incentive Program

(A) A Market Maker who improves the disseminated quote will be given Priority Status on the Auto-Ex System as provided below.

(i) To receive priority, a Market Maker must improve the disseminated market by inputting the improved quote into a Market Maker Hand Held Terminal and simultaneously by vocalizing the improved bid or offer. The improved market will be disseminated via the Options Price Reporting Authority (''OPRA'').

(ii) The improved quote must be in a size that is at least the lesser of ten contracts or the disseminated size.

(iii) The Market Maker who improved the disseminated market must remain in the crowd and will be responsible for filling orders in the crowd until that Market Maker no longer has priority.

(iv) If orders are re-routed to Floor Broker Hand-Held Terminals for execution pursuant to Commentary .07, Floor Brokers will identify the improved quote by an alert in the system and will use their best efforts to assure that Market Makers with Priority Status receive allocations of contracts as provided in subsection (E), below.

(B) The Market Maker's priority for both automatic and manual executions will continue until one of the following occurs:

(i) the Market Maker's commitment size is filled;

(ii) the Market Maker's better price is improved; or

(iii) the Market Maker removes the bid or offer that improved the disseminated quote.

(C) The following provisions apply if the improved quote is matched:

(i) Market Makers who match the improved quote immediately (i.e., within one second) will be deemed to have Priority Status and will be allocated contracts as provided in subsection (E), below.

(ii) Market Makers who match the improved market, but who do not match it immediately, will not be given Priority Status.

(iii) An incoming order in a size greater than the size of the market improvement, including any matching quotes, will receive split price execution.

(iv) If the LMM matches the improved quote via Auto-Quote or QTX after one second, then inbound orders will be assigned pursuant to Rule 6.87(k)(1), but only after Market Makers with Priority Status have first been satisfied.

(D) The following provisions apply if the improved quote is further improved:

(i) If the improved quote is improved by Auto-Quote or QTX, then inbound orders will be assigned pursuant to Rule 6.87(k)(1).

(ii) If a Market Maker improves the improved quote, the Market Maker who subsequently improved the quote will be given Priority Status.

(E) Order Allocation Process.

(i) A Market Maker with Priority Status who quotes alone at the best price will be allocated 100% of the incoming orders up to the size of the Market Maker's quote.

(ii) If more than one Market Maker improves the quote, then such Market Makers will be allocated contracts as follows:

(a) Market Makers with Priority Status will be on parity and will be allocated 40% of the next incoming order or orders on an equal distribution basis, up to their quoted sizes. The 40% allocation will be effected only after all public customer orders at the same price have first been executed. Orders will continue to be allocated in this manner until the total number of contracts allocated pursuant to this subsection equals or exceeds 20 contracts, at which time Priority Status will no longer apply. For example, Priority Status will no longer apply once a Market Maker has been allocated 40 contracts based on an allocation of 40% of a single 100-contract order, pursuant to this subsection. Likewise, Priority Status will no longer apply once a Market Maker has been allocated a total of 24 contracts based on three subsequent allocations of 8 contracts, each of which are based on allocations of 40% of 20 contracts.

(b) All other outstanding bids and offers at the improved price, as well as any bids and offers representing the remaining sizes of Market Maker quotes with Priority Status, will then receive allocations on a size pro rata basis.

(c) LMMs quoting at the improved price will be eligible to receive guaranteed participation in connection with allocations made pursuant to subsection (b), above, but not for allocations made pursuant to subsection (a), above.

(3) Interim Price Improvement Incentive Program

(A) A Market Maker who improves the disseminated quote will receive Priority Status as provided below.

(i) To receive Priority Status, a Market Maker must improve the disseminated quote via open outcry by a size that is at least the lesser of ten contracts or the disseminated size.

(ii) The improved quote will be keyed into POETS by the Order Book Official (''OBO'') and will be disseminated via OPRA.

(iii) When a Market Maker improves the quote in a particular series, orders in that series will be routed to Floor Broker Hand Held Terminals for execution. However, if the LMM has set Auto-Ex to execute incoming orders at the NBBO pursuant to Rule 6.87(i), and a Market Maker has improved the PCX BBO but not the NBBO, then incoming orders may be executed automatically at the NBBO pursuant to Rule 6.87(k)(1). If incoming orders are not automatically executed at the NBBO in such circumstances (e.g., because they exceed a size parameter), then they will be re-routed to a Floor Broker Hand-Held Terminal for execution. When that occurs, the Market Maker who improved the PCX BBO (but not the NBBO) will have Priority Status at the PCX BBO price. If the PCX BBO becomes the NBBO, that Market Maker will have Priority Status.

(iv) Floor Brokers will identify the improved quote by an alert in the system and must use their best efforts to identify the Market Makers with Priority Status and assure that such Market Makers receive allocations of contracts as provided in this subsection (E), below.

(v) The Market Maker who improved the disseminated market must remain in the trading crowd and will be responsible for filling orders in the crowd until that Market Maker no longer has priority.

(B) The Market Maker's Priority Status will continue until one of the following occurs:

(i) the Market Maker's commitment size is filled;

(ii) the Market Maker's better price is improved; or

(iii) the Market Maker removes the bid or offer that improved the disseminated quote;

(C) The following provisions apply if the improved quote is matched:

(i) Market Makers who match the improved quote immediately (i.e., within one second) will be deemed to have Priority Status and will be allocated contracts as provided in subsection (E) below.

(ii) Market Makers who match the improved market, but who do not match it immediately, will not be given Priority Status.

(iii) An incoming order in a size greater than the size of the market improvement, including any matching quotes, will receive split price execution in the trading crowd.

(iv) If the LMM matches the improved quote via Auto-Quote or QTX after one second, then inbound orders will be assigned pursuant to 6.87(k)(1), but only after Market Makers with Priority Status have first been satisfied.

(D) The following provisions apply if the improved quote is further improved:

(i) If a Market Maker improves the improved quote, the Market Maker who subsequently improved the quote will be given Priority Status.

(ii) If the improved quote is improved by Auto-Quote or QTX, then inbound orders will be assigned pursuant to 6.87(k)(1).

(E) Order Allocation Process

(i) A Market Maker with Priority Status who quotes alone at the best price will be allocated 100% of the incoming orders up to the size of that Market Maker's quote.

(ii) If more than one Market Maker improves the quote, then such Market Makers will be allocated contracts as follows:

(a) Market Makers with Priority Status will be on parity and will be allocated 40% of the next incoming order or orders on an equal distribution basis, up to their quoted sizes. The 40% allocation will be effected only after all public customer orders at the same price have first been executed. Orders will continue to be allocated in this manner until the total number of contracts allocated pursuant to this subsection equals or exceeds 20 contracts, at which time Priority Status will no longer apply. For example, Priority Status will no longer apply once a Marker Maker has been allocated 40 contracts based on an allocation of 40% of a single 100-contract order, pursuant to this subsection. Likewise, Priority Status will no longer apply once a Market Maker has been allocated a total of 24 contracts based on three subsequent allocations of 8 contracts, each of which are based on allocations of 40% of 20 contracts.

(b) All other outstanding bids and offers at the improved price, as well as any bids and offers representing the remaining sizes of Market Maker quotes with Priority Status, will then receive allocations on a size pro rata basis.

(c) LMMs quoting at the improved price will be eligible to receive guaranteed participation in connection with allocations made pursuant to subsection (b), above, but not for allocations made pursuant to subsection (a), above.

Commentary

* * * * *

.02 For purposes of Rules 6.87(k)(2) and 6.87(k)(3), references to Market Makers include Lead Market Makers.

.03 Rules 6.87(k)(2) and 6.87(k)(3) apply to all classes and series of option contracts traded on the Exchange.

.04 The Auto-Ex guaranteed size is the size the LMM has guaranteed to the Options Allocation Committee.

.05 Split price execution refers to an execution of a trade where some of the contracts in the order will receive an execution at the best available price, and the remainder of the contracts in the order will be executed at the next best available price. Under Rule 6.87(k)(2), an incoming order will be filled at the improved price until the improved quote and quotes matching the improved quote have been satisfied. The balance of the incoming order will be executed at the next best price. In the interim program, the balance of the order will be executed in the trading crowd. In the permanent program, split price execution will be automated.

.06 Rule 6.87(k)(3), the Interim Price Improvement Incentive Program, will become operative on or before July 15, 2002 and will continue to apply until Rule 6.87(k)(2) becomes operative. Rule 6.87(k)(2) will be rolled out gradually until such time that it is implemented floor wide. The PCX estimates that Rule 6.87(k)(2) will commence operation in December 2002 and will become completely operative by the third quarter of 2003. At that time, Rule 6.87(k)(2) will supercede Rule 6.87(k)(3).

.07 POETS re-routes orders to Floor-Broker Hand-Held terminals if: (i) the inbound order exceeds the established size parameter for automatic execution; (ii) the order is for the account of a broker-dealer and the Exchange has not designated broker-dealer orders as eligible for automatic execution in the issue; (iii) the Auto-Ex system has been suspended pursuant to Rule 6.87(i); (iv) the NBBO is crossed or locked and the Auto-Ex system has been set to re-route orders pursuant to Rule 6.87(j); or (v) the order would otherwise receive an execution at a price that is inferior to the NBBO.

II. Self-Regulatory Organization's Statement of the Purpose of, and Statutory Basis for, the Proposed Rule Change

In its filing with the Commission, the self-regulatory organization included statements concerning the purpose of and basis for the proposed rule change and discussed any comments it received on the proposed rule change. The text of these statements may be examined at the places specified in Item IV below. The Exchange has prepared summaries, set forth in sections A, B, and C below, of the most significant aspects of such statements.

A. Self-Regulatory Organization's Statement of the Purpose of, and Statutory Basis for, the Proposed Rule Change

1. Purpose

Background. The proposed rule change is intended to substantially enhance incentives for PCX Market Makers to quote competitively and substantially reduce disincentives for market participants to act competitively.[5] Currently, changes to the PCX's disseminated quote are effected either by Auto-Quote, by the proprietary quote feed (''QTX'') of an Lead Market Maker (''LLM''), or by manual input. First, in Pacific Options Exchange Trading System (''POETS'')[6] or QTX processing, Auto-Quote parameters are established and maintained by the LMM. As the price of the underlying security changes, the system recalculates the bid/ask prices of each option series. This recalculated bid/ask price establishes the published price for inbound orders and defines the execution price for trades effected through the automatic execution system.

[5] The PCX's settlement with the Commission requires the PCX, among other things, to adopt rules concerning its automated quotation and execution systems which substantially enhance incentives to quote competitively and substantially reduce disincentives for market participants to act competitively. *See* Securities Exchange Act Release No. 43268 (September 11, 2000), Administrative Proceeding File No. 3–10282. The Exchange notes that the Commission previously has approved a PCX rule change proposal that the Exchange believes serves to encourage its Market Makers to quote more competitively and to be rewarded with trades executed on Auto-Ex. *See* Securities Exchange Act Release No. 44847 (September 25, 2001), 66 FR 50237 (October 2, 2001) (File No. SR –PCX–2001–05) (Accelerated approval of proposal to assign orders to Market Makers who are logged-on Auto-Ex, based on the percentage of their in-person agency contracts traded in a particular issue.). Pursuant to the approved rule change, Auto-Ex orders are assigned to Market Makers according to the number of in-person agency contracts they have traded (excluding Auto-Ex contracts traded) in a particular issue compared to all of the Market Maker in-person contracts (excluding Auto-Ex contracts) during a review period. The review period is determined by the Options Floor Trading Committee and may be no longer than two weeks.

[6] POETS is the Exchange's automated trading system comprised of an options order routing system, an automatic execution system (''Auto-Ex''), an on-line limit order book system and an automatic market quote update system (''Auto-Quote'').

Second, the bid and ask prices for options of a particular series may also be changed manually by an exchange or LMM employee, who enters new quotes of floor members that are vocalized in the trading crowd by public outcry.

Currently, inbound electronic orders that are executed on Auto-Ex are assigned to the Market Makers who are logged on to Auto-Ex by rotation.[7] The number of contracts assigned to Market Makers on Auto-Ex is based upon the number of their in-person agency contracts traded in an issue (excluding Auto-Ex contracts traded) compared to all of the Market Maker in-person agency contracts traded in the issue (excluding Auto-Ex contracts traded) during a review period.[8]

Auto-Ex Price Improvement Incentive Program. The proposed rule change provides an incentive for Market Makers[9] to improve the disseminated prices on the PCX by assigning priority on Auto-Ex to the Market Maker who improved the disseminated quote.[10] A Market Maker who improves the disseminated quote would be given Priority Status on the Auto-Ex System as follows.

To receive priority, a Market Maker would be required to improve the disseminated market by inputting the improved quote into a Market Maker Hand Held Terminal and simultaneously by vocalizing the improved bid or offer. The improved market would be disseminated via the Options Price Reporting Authority (''OPRA''). The improved quote would be required to be in a size that is at least the lesser of ten contracts or the disseminated size.[11] The Market Maker who improved the disseminated market would be required to remain in the crowd and would be responsible for filling orders in the crowd until that Market Maker no longer has priority.

If orders are re-routed to Floor Broker Hand-Held Terminals for execution,[12] Floor Brokers would identify the improved quote by an alert in the system and would use their best efforts to assure that Market Makers with Priority Status receive allocations of contracts as provided in proposed PCX Rule 6.87(k)(2)(E), setting forth the order allocation process.

The Market Maker's priority for both automatic and manual executions would continue until one of the following occurs: the Market Maker's commitment size is filled; the Market Maker's better price is improved; or the Market Maker removes the bid or offer that improved the disseminated quote.

The following provisions would apply if the improved quote is matched: Market Makers who match the improved quote immediately (*i.e.,* within one second) would be deemed to have Priority Status and would be allocated contracts as provided in proposed PCX Rule 6.87(k)(2)(E). Market Makers who match the improved market, but who do not match it immediately, would not be given Priority Status. An incoming order in a size greater than the size of the market improvement, including any matching quotes, would receive split price execution.[13] If the LMM matches the improved quote via Auto-Quote or QTX after one second, then inbound orders would be assigned pursuant to PCX Rule 6.87(k)(1),[14] but only after Market Makers with Priority Status have first been satisfied.[15]

The following provisions would apply if the improved quote is further improved: If the improved quote is improved by Auto-Quote or QTX, then inbound orders would be assigned pursuant to PCX Rule 6.87(k)(1).[16] If a Market Maker improves the improved quote, the Market Maker who subsequently improved the quote would be given Priority Status.

Order Allocation Process. Proposed PCX Rule 6.87(k)(2)(E) provides that a Market Maker with Priority Status who quotes alone at the best price would be allocated 100% of the incoming orders up to the size of the Market Maker's quote. However, if more than one Market Maker improves the quote, then such Market Makers would be allocated contracts as follows: First, under subsection (E)(ii)(a) to proposed PCX Rule 6.87(k)(2), Market Makers with Priority Status would be on parity and would be allocated 40% of the next incoming order or orders on an equal distribution basis, up to their quoted sizes. The 40% allocation would be effected only after all public customer orders at the same price have first been executed. Orders would continue to be allocated in this manner until the total number of contracts allocated pursuant to this subsection equals or exceeds 20 contracts, at which time Priority Status would no longer apply.[17]

[7] PCX Rule 6.87(k)(1) governs the rotational assignment of Auto-Ex orders. *See supra* note 5.

[8] *See supra* note 5.

[9] For purposes of this proposal, references to Market Makers include Lead Market Makers. *See* proposed Commentary .02.

[10] The proposed rule changes set forth in this filing cover all classes and series of option contracts traded on the Exchange. *See* proposed Commentary .03.

[11] Under PCX Rule 6.86(c)(1)(A), the Exchange may, under certain circumstances, disseminate a size less than the guaranteed size (the guaranteed size is the minimum firm quote size for which the LLM has, during the allocation process, pledged to make markets). See Securities Exchange Act Release No. 46029, June 4, 2002 (**Federal Register** publication pending). Assume, for example, that the LLM is disseminating a market of 2 bid, 2.20 asked, in a particular option series for which the guaranteed size is twenty contracts. Then assume that a customer order to buy one contract for 2.10 is entered on the Exchange, making the new best bid and offer on the Exchange 2.10 bid, 2.20 asked. In this situation, the Exchange disseminates the true size of the customer order for one contract. Under the instant proposed rule change, under the circumstances above, one contract would become the minimum amount by which a Market Maker could improve the disseminated quote. Telephone conversation between Michael D. Pierson, Vice President, PCX, and Steven G. Johnston, Special Counsel, Division, Commission, on June 6, 2002.

[12] As noted in proposed Commentary .07, POETS will re-route orders to Floor-Broker Hand-Held terminals if: (i) the inbound order exceeds the established size parameter for automatic execution; (ii) the order is for the account of a broker-dealer and the Exchange has not designated broker-dealer orders as eligible for automatic execution in the issue; (iii) the Auto-Ex system has been suspended pursuant to PCX Rule 6.87(i), which permits the Options Floor Trading Committee to designate orders in certain option issues for default manual representation in the trading crowd if an order would be executed at a price more than one trading increment away from the PCX market; (iv) the NBBO is crossed or locked and the Auto-Ex system has been set to re-route orders pursuant to PCX Rule 6.87(j); or (v) the order would otherwise receive an execution at a price that is inferior to the NBBO.

[13] Split price execution refers to an execution of a trade where some of the contracts in the order will receive an execution at the best available price, and the remainder of the contracts in the order will be executed at the next best available price. Under Proposed PCX Rule 6.87(k)(2), an incoming order would be filled at the improved price until the improved quote and quotes matching the improved quote have been satisfied. The balance of the incoming order would be executed at the next best price. In the interim program, the balance of the order would be executed in the trading crowd. In the permanent program, split price execution would be automated.

[14] *See supra* note 7. An exception would be made in the case where incoming orders would be assigned to Floor-Broker Hand-Held Terminals pursuant to proposed Commentary .07 (*See supra* note 12). In that situation, Market Makers with Priority Status would retain priority at the improved price until filled, but additional incoming orders would be allocated to crowd members consistent with current PCX rules, including rules governing open outcry trading. Telephone conversation between Michael D. Pierson, Vice President, PCX, and Steven G. Johnston, Special Counsel, Division, Commission, on May 9, 2002.

[15] If the LMM matches the improved quote via Auto-Quote or QTX within one second, then no Market Makers would have priority status and inbound orders would be assigned pursuant to PCX Rule 6.87(k)(1). Telephone conversation among Michael D. Pierson, Vice President, and Cindy L. Sink, Senior Attorney, Regulatory Policy, PCX; and Elizabeth K. King, Associate Director, Division, Commission, and Steven G. Johnston, Special Counsel, Division, Commission, on May 28, 2002.

[16] *See supra* note 7.

[17] For example, Priority Status would no longer apply once a Market Maker has been allocated 40 contracts based on an allocation of 40% of a single 100-contract order, pursuant to this subsection. Likewise, Priority Status would no longer apply once a Market Maker has been allocated a total of 24 contracts based on three subsequent allocations of 8 contracts, each of which are based on allocations of 40% of 20 contracts.

Second, under proposed subsection (E)(ii)(b) to proposed PCX Rule 6.87(k)(2), all other outstanding bids and offers at the improved price, as well as any bids and offers representing the remaining sizes of Market Maker quotes with Priority Status, would then receive allocations on a size pro rata basis.

With regard to LMM guaranteed participation under PCX Rule 6.82(d), LMMs quoting at the improved price would be eligible to receive guaranteed participation in connection with allocations made under subsection (E)(ii)(b) to proposed PCX Rule 6.87(k)(2), but not under subsection (E)(ii)(a) of the proposed rule.

The PCX estimates that the technology changes necessary to begin implementing the proposed rule and make its provisions operative would take approximately 10 months. The proposed rule would be implemented gradually until such time that it is implemented floor wide. The PCX estimates that the proposed rule would commence operation in December 2002 and would become completely operative by the third quarter of 2003. However, the Exchange is proposing to adopt an interim program, described below, to reward Market Makers who improve the disseminated market until this program is available. Once the permanent program set forth above is operative, it would supersede the interim program.

Interim Price Improvement Incentive Program. The Exchange proposes to adopt an interim rule change to become operative on or before July 15, 2002 and to remain operative until the above-described rule change becomes operative. Under the interim program, a Market Maker who improves the disseminated quote would receive Priority Status as follows.

To receive Priority Status, a Market Maker would be required to improve the disseminated quote via open outcry by a size of ten contracts or the disseminated size, whichever is less.[18] The improved quote would be keyed into POETS by the Order Book Official (''OBO'') and would be disseminated via OPRA. When a Market Maker improves the quote in a particular series, orders in that series would be routed to Floor Broker Hand Held Terminals for execution. However, if the LMM has set Auto-Ex to execute incoming orders at the NBBO pursuant to PCX Rule 6.87(i), and a Market Maker has improved the PCX BBO but not the NBBO, then incoming orders would be permitted to execute automatically at the NBBO. However, in circumstances where incoming orders are not automatically executed at the NBBO (*e.g.,* because they exceed a size parameter), orders would be re-routed to a Floor Broker Hand-Held Terminal for execution.[19] When that occurs, the Market Maker who improved the PCX BBO (but not the NBBO) would have Priority Status at the PCX BBO price. If the PCX BBO becomes the NBBO, that Market Maker would have Priority Status.

Floor Brokers would identify the improved quote by an alert in the system and would be required to use their best efforts to identify the Market Makers with Priority Status and assure that such Market Makers receive allocations of contracts as provided in proposed PCX Rule 6.87(k)(3)(E), the order allocation process. The Market Maker who improved the disseminated market would be required to remain in the trading crowd and would be responsible for filling orders in the crowd until that Market Maker no longer has priority.

The Market Maker's Priority Status would continue until one of the following occurs: the Market Maker's commitment size is filled; the Market Maker's better price is improved; or the Market Maker removes the bid or offer that improved the disseminated quote.

The following provisions would apply if the improved quote is matched: Market Makers who match the improved quote immediately (*i.e.,* within one second) would be deemed to have Priority Status and would be allocated contracts as provided in proposed PCX Rule 6.87(k)(3)(E). Market Makers who match the improved market, but who do not match it immediately, would not be given Priority Status. An incoming order in a size greater than the size of the market improvement, including any matching quotes, would receive split price execution in the trading crowd.[20] If the LMM matches the improved quote via Auto-Quote or QTX after one second, then inbound orders would be assigned pursuant to PCX Rule 6.87(k)(1),[21] but only after Market Makers with Priority Status have first been satisfied.[22]

The following provisions would apply if the improved quote were further improved: If a Market Maker improves the improved quote, the Market Maker who subsequently improved the quote would be given Priority Status. If the improved quote were improved by Auto-Quote or QTX, then inbound orders would be assigned pursuant to PCX Rule 6.87(k)(1).

Order Allocation Process for the Interim Program. Under proposed PCX Rule 6.87(k)(3), a Market Maker with Priority Status who quotes alone at the best price would be allocated 100% of the incoming orders up to the size of the Market Maker's quote. However, if more than one Market Maker improves the quote, then such Market Makers would be allocated contracts as follows: First, under proposed subsection (E)(ii)(a) to proposed PCX Rule 6.87(k)(3), Market Makers with Priority Status would be on parity and would be allocated 40% of the next incoming order or orders on an equal distribution basis, up to their quoted sizes. The 40% allocation would be effected only after all public customer orders at the same price have first been executed. Orders would continue to be allocated in this manner until the total number of contracts allocated pursuant to this subsection equals or exceeds 20 contracts, at which time Priority Status would no longer apply.[23] Second, under subsection (E)(ii)(b) to proposed PCX Rule 6.87(k)(3), all other outstanding bids and offers at the improved price, as well as any bids and offers representing the remaining sizes of Market Maker quotes with Priority Status, would then receive allocations on a size pro rata basis.

With regard to LMM guaranteed participation under PCX Rule 6.82(d), LMMs quoting at the improved price would be eligible to receive guaranteed participation in connection with allocations made under subsection (E)(ii)(b) to proposed PCX Rule 6.87(k)(3), but not under subsection (E)(ii)(a) to proposed PCX Rule 6.87(k)(3).

2. Statutory Basis

The Exchange believes that this proposal is consistent with section 6(b) of the Act[24] in general, and furthers the objectives of section 6(b)(5),[25] in particular, in that it is designed to facilitate transactions in securities, to promote just and equitable principles of trade, to foster cooperation and coordination with persons engaged in facilitation transactions in securities, and to remove impediments to and perfect the mechanism of a free and open market and a national market system.

[18] *See supra* note 11.

[19] *See supra* note 12. Telephone conversation between Cindy L. Sink, Senior Attorney, Regulatory Policy, PCX and Steven G. Johnston, Special Counsel, Division, Commission, on May 29, 2002.

[20] *See supra* note 13.

[21] *See supra* note 14.

[22] *See supra* note 15.

[23] *See supra* note 17.

[24] 15 U.S.C. 78f(b).

[25] 15 U.S.C. 78f(b)(5).

B. Self-Regulatory Organization's Statement on Burden on Competition

The PCX does not believe that the proposed rule change will impose any burden on competition that is not necessary or appropriate in furtherance of the purposes of the Act.

C. Self-Regulatory Organization's Statement on Comments on the Proposed Rule Change Received From Members, Participants or Others

No written comments were either solicited or received.

III. Date of Effectiveness of the Proposed Rule Change and Timing for Commission Action

Within 35 days of the date of publication of this notice in the **Federal Register** or within such longer period (i) as the Commission may designate up to 90 days or such date if it finds such longer period to be appropriate and publishes its reasons for so finding or (ii) as to which the Exchange consents, the Commission will:

(A) By order approve such proposed rule change, or,

(B) Institute proceedings to determine whether the proposed rule change should be disapproved.

IV. Solicitation of Comments

Interested persons are invited to submit written data, views, and arguments concerning the proposed rule change and Amendment No. 1 thereto, including whether the proposed rule change is consistent with the Act. Persons making written submissions should file six copies thereof with the Secretary, Securities and Exchange Commission, 450 Fifth Street, NW., Washington, DC 20549–0609. Copies of the submission, all subsequent amendments, all written statements with respect to the proposed rule change that are filed with the Commission, and all written communications relating to the proposed rule change between the Commission and any person, other than those that may be withheld from the public in accordance with the provisions of 5 U.S.C. 552, will be available for inspection and copying in the Commission's Public Reference Room, 450 Fifth Street, NW., Washington, DC 20549–0609. Copies of the proposed rule change and amendments will also be available for inspection and copying at the principal office of the PCX. All submissions should refer to File No. SR–PCX–2001–17 and should be submitted by July 18, 2002.

For the Commission, by the Division of Market Regulation, pursuant to delegated authority.[26]

Margaret H. McFarland,

Deputy Secretary.

[FR Doc. 02–16200 Filed 6–26–02; 8:45 am]

BILLING CODE 8010–01–P

SECURITIES AND EXCHANGE COMMISSION

[Release No. 34–46095; File No. SR–Phlx–2002–04]

Self-Regulatory Organizations; Notice of Filing of Proposed Rule Change and Amendments Nos. 1 through 7 thereto by the Philadelphia Stock Exchange, Inc. Relating to Electronic Interface With AUTOM for Phlx Specialists and Registered Options Traders

June 20, 2002.

Pursuant to section 19(b)(1) of the Securities Exchange Act of 1934 (''Act'')[1] and Rule 19b–4 thereunder,[2] notice is hereby given that on January 15, 2002, the Philadelphia Stock Exchange, Inc. (''Phlx'' or ''Exchange'') filed with the Securities and Exchange Commission (''Commission'') the proposed rule change as described in Items I, II, and III below, which Items have been prepared by the Phlx. On March 6, 2002, the Exchange filed Amendment No. 1 to the proposed rule change.[3] On March 14, 2002, the Exchange filed Amendment No. 2 to the proposed rule change.[4] On March 26, 2002, the Exchange filed Amendment No. 3 to the proposed rule change.[5] On April 2, 2002, the Exchange filed Amendment No. 4 to the proposed rule change.[6] On May 16, 2002, the Exchange filed Amendment No. 5 to the proposed rule change.[7] On June 12, 2002, the Exchange filed Amendment No. 6 to the proposed rule change. On June 19, 2002, the Exchange filed Amendment No. 7 to the proposed rule change.[8] The Commission is publishing this notice to solicit comments on the proposed rule change from interested persons.

I. Self-Regulatory Organization's Statement of the Terms of Substance of the Proposed Rule Change

The Philadelphia Stock Exchange, Inc. (''Phlx'' or ''Exchange''), pursuant to Rule 19b–4 of Act, proposes to amend Phlx Rule 1080, *Philadelphia Stock Exchange Automated Options Market (AUTOM) and Automatic Execution*

---

[26] 17 CFR 200.30–3(a)(12).

[1] 15 U.S.C. 78s(b)(1).

[2] 17 CFR 240.19b–4.

[3] *See* letter from Richard S. Rudolph, Director and Counsel, Phlx, to Nancy J. Sanow, Assistant Director, Division of Market Regulation (''Division''), Commission, dated March 5, 2002 (''Amendment No. 1''). Amendment No. 1: (1) clarified provisions relating to the minimum size of an on-floor order for the proprietary account of a Registered Options Traders (''ROTs'') or specialist; (2) specified how contracts that remain after Price Improving ROTs and specialists have received their entitlement will be allocated; and (3) stipulated the timeframe for implementing proposed system changes.

[4] *See* letter from Richard S. Rudolph, Director and Counsel, Phlx, to Nancy J. Sanow, Assistant Director, Division, Commission, dated March 13, 2002 (''Amendment No. 2''). Amendment No. 2 clarified: (1) the responsibility for allocating incoming orders to ROTs pursuant to the proposed rule change; (2) the relationship between current Phlx rules pertaining to the precedence of orders under the proposed rule change; and (3) plans to make an electronic interface available to member firms.

[5] *See* letter from Richard S. Rudolph, Director and Counsel, Phlx, to Nancy J. Sanow, Assistant Director, Division, Commission, dated March 25, 2002 (''Amendment No. 3''). Amendment No. 3: (1) clarified that certain Phlx rules pertaining to the precedence of orders would not apply to allocation of orders under the proposed rule change; and (2) corrected a typographical error in the proposed rule text.

[6] *See* letter from Richard S. Rudolph, Director and Counsel, Phlx, to Nancy J. Sanow, Assistant Director, Division, Commission, dated April 1, 2002 (''Amendment No. 4''). Amendment no. 4: (1) clarified the Exchange's commitment to modify its systems to automatically execute eligible incoming orders against price-improving orders placed on the limit order book pursuant to the proposed rule; (2) clarified the proposal's approach to allocating remaining contracts after an execution or executions have filled a price-improving order or price-improving orders; (3) established that a price-improving ROT or specialist shall not be required to participate in a trade above its stated size; (4) specified the specialist's responsibility to ensure that incoming price-improving orders are filled up to their stated size; and (5) eliminated the requirement that eligibility for order delivery be subject to Options Committee approval.

[7] *See* letter from Richard S. Rudolph, Director and Counsel, Phlx, to Nancy J. Sanow, Assistant Director, Division, Commission, dated May 15, 2002 (''Amendment No. 5''). Amendment No. 5: (1) clarified terminology and definitions; (2) stipulated when and how crowd participants may match price-improving orders; and (3) established a Special Allocation that provides that a Price Improving ROT/Specialist is entitled to receive the largest number of contracts among all crowd participants at that price and how long such Special Allocation would remain in effect.

[8] *See* letter from Richard S. Rudolph, Director and Counsel, Phlx, to Nancy J. Sanow, Assistant Director, Division, Commission, dated June 11, 2002 (''Amendment No. 6'') and dated June 18, 2002 (''Amendment No. 7''). Amendments No. 6 and No. 7 corrected the marked changes to the proposed rule text to reflect current Phlx rules, reinserted the proposed rule text in the 3rd paragraph of Rule 1080 commentary .04, and corrected a typographical error.

System (AUTO–X),[9] to enable a ROT [10] or specialist to improve the Phlx bid or offer by means of enhanced access to place limit orders on the electronic limit order book [11] through electronic interface with AUTOM (''Price Improving ROT/Specialist'').

Under the proposal, on-floor orders for the proprietary accounts of specialists and ROTs, up to 1,000 contracts, may be entered for delivery through AUTOM, through the use of Exchange approved proprietary systems to interface with AUTOM. The following types of orders for the proprietary account(s) of specialists and ROTs would be eligible for AUTOM: day and simple cancel. By January 2004, the Phlx's systems will be capable of automatically executing eligible incoming orders against Price-Improving ROT/Specialist orders entered via electronic interface with AUTOM. The system change necessary to facilitate the automatic execution of these orders will be fully deployed over a 15-month period.[12] Following full implementation of this system change, the proposed rule will apply to all series and classes of options traded on the exchange.[13]

In conjunction with the proposed rule change to Phlx Rule 1080, the Exchange also proposes to amend Phlx Rule 1014, *Obligations and Restrictions Applicable to Specialists and Registered Options Traders,* to provide for special parity and priority rules and procedures concerning orders for the account(s) of Phlx ROTs and specialists entered through electronic interface with AUTOM, where those orders are submitted to either improve the Phlx bid or offer or to match such improved bid or offer.[14]

The text of the proposed rule change is set forth below. New text is italicized; deleted text is bracketed.

Rule 1080. Philadelphia Stock Exchange Automated Options Market (AUTOM) and Automatic Execution System (AUTO–X)

(a) General—AUTOM is the Exchange's electronic order delivery and reporting system, which provides for the automatic entry and routing of Exchange-listed equity options and index options orders to the Exchange trading floor. Orders delivered through AUTOM may be executed manually, or certain orders are eligible for AUTOM's automatic execution feature, AUTO–X, in accordance with the provisions of this Rule. Equity option and index option specialists are required by the Exchange to participate in AUTOM and its features and enhancements. Option orders entered by Exchange member organizations into AUTOM are routed to the appropriate specialist unit on the Exchange trading floor.

This Rule shall govern the orders, execution reports and administrative messages (''order messages'') transmitted between the offices of member organizations and the trading floors of the Exchange through AUTOM.

All references to ''ROTs'' in this Rule 1080 are to Phlx Registered Options Traders as defined in Exchange Rule 1014(b).

(b) Eligible Orders [-]

(i) The following types of orders are eligible for entry into AUTOM: [(i) Generally, only agency orders may be entered.]

(A) Agency orders up to the maximum number of contracts permitted by the Exchange. *Agency* orders up to 1000 contracts, depending on the option, are eligible for AUTOM order delivery, subject to the approval of the Options Committee. The following types of *agency* orders are eligible for AUTOM: day, GTC, market, limit, stop, stop limit, all or none, or better, simple cancel, simple cancel to reduce size (cancel leaves), cancel to change price, cancel with replacement order, market close, market on opening, limit on opening, limit close, and possible duplicate orders.

(B) On-floor orders for the proprietary account(s) of ROTs and specialists via electronic interface with AUTOM, up to the maximum number of contracts permitted by the Exchange, subject to the restrictions on order entry set forth in Commentary .04 of this Rule. Orders up to 1,000 contracts, depending on the option, are eligible for AUTOM order delivery. The following types of orders for the proprietary account(s) of ROTs and specialists are eligible for entry via electronic interface with AUTOM: day limit and simple cancel.

* * * * *

(ii) The Exchange's Options Committee may determine to accept additional types of orders as well as to discontinue accepting certain types of orders.

(iii) Orders may not be unbundled for the purposes of eligibility for AUTOM and AUTO–X, nor may a firm solicit a customer to unbundle an order for this purpose.

* * * * *

Commentary

* * * * *

.04 *Price-improving ROT and specialist price-improving orders via electronic interface with AUTOM. On-floor orders for the proprietary accounts of ROTs or specialists that result in an improvement in the then prevailing market disseminated by the Exchange (i.e., raise the bid or lower the offer) may be entered for delivery through AUTOM, through the use of Exchange approved proprietary systems to interface with AUTOM to be placed on the specialist's limit order book. In order to be displayed, on-floor price improving orders for the proprietary accounts of ROTs or specialists delivered via electronic interface with AUTOM shall be for a minimum size of at least the lesser of the AUTO–X guarantee for the option that is the subject of such an order, or 20 contracts. Inbound orders eligible for execution against price-improving ROT or specialist price-improving orders entered into AUTOM via electronic interface and orders that match such price-improving orders via electronic interface with AUTOM, shall be executed by the specialist and shall be allocated by the person required to do so pursuant to Exchange rules. The Exchange will make electronic interface with AUTOM available to member firms, and will notify all members on the Options Floor when it has completed the development of appropriate interfaces for such proprietary systems on the Options Floor, and when the use of such electronic interfaces may commence. Thereafter, ROTs and specialists must connect with these interfaces with their own proprietary devices.*

The Exchange shall modify its AUTO–X system not later than January 2004, so that it shall automatically execute

[9] AUTOM is the Exchange's electronic order delivery and reporting system, which provides for the automatic entry and routing of equity option and index option orders to the Exchange trading floor. Orders delivered through AUTOM may be executed manually, or certain orders are eligible for AUTOM's automatic execution feature, AUTO–X. Equity option and index option specialists are required by the Exchange to participate in AUTOM and its features and enhancements. Option orders entered by Exchange members into AUTOM are routed to the appropriate specialist unit on the Exchange trading floor.

[10] A ROT is a regular member or a foreign currency options participant of the Exchange located on the trading floor who has received permission from the Exchange to trade in options for his own account. *See* Phlx Rule 1014(b).

[11] The electronic ''limit order book'' is the Exchange's automated specialist limit order book, which automatically routes all unexecuted AUTOM orders to the book and displays orders real-time in order of price-time priority. Orders not delivered through AUTOM may also be entered onto the limit order book. *See* Phlx Rule 1080, Commentary .02.

[12] *See* Amendments Nos. 3 and 4.

[13] Telephone conversation between Richard Rudolph, Director and Counsel, Phlx, and Steven Johnston, Special Counsel, Division, Commission, March 21, 2002 (''March 21, 2002 Telephone Conversation'').

[14] March 21, 2002 Telephone Conversation.

eligible incoming orders against Phlx Price Improving ROT and specialist price improving orders and orders matching such price-improving orders entered via electronic interface with AUTOM resting on the limit order book. The Exchange will deploy the modified system over a 15-month period.

An ROT or specialist that posts a bid or offer through electronic interface with AUTOM and elects to cancel such a bid or offer must cancel such bid or offer through the electronic interface.

Rule 1014. Obligations and Restrictions Applicable to Specialists and Registered Options Traders

* * * * *

(g) Equity Option and Index Option Priority and Parity

(i) *(A)* Exchange Rules 119 and 120 direct members in the establishment of priority of orders on the floor. In addition, equity option and index option orders of controlled accounts are required to yield priority to customer orders when competing at the same price, as described below.

For the purpose of paragraph (g) of this Rule, an account type is either a controlled account or a customer account. A controlled account includes any account controlled by or under common control with a broker-dealer. Specialist accounts of PHLX Option Specialists, however, are not subject to yielding requirements placed upon controlled accounts by this Rule. Customer accounts are all other accounts.

Orders of controlled accounts must yield priority to customer orders, except that PHLX ROTs closing in-person are not required to yield priority to orders of customer accounts.

Orders of controlled accounts are not required to yield priority to other controlled account orders, except that when both an order of a PHLX ROT closing in-person and some other order of a controlled account are established in the crowd at the same price, and then a customer order is established at that price, the order of the controlled account must yield to the customer order while the order of the PHLX ROT closing in-person does not have to so yield.

(B) ROT Access—Pursuant to Rule 1080(b)(i)(B) and Commentary .04 thereto, a Phlx ROT or specialist may enter an order that results in the improvement of the prevailing bid and/or offer disseminated by the Exchange through an electronic interface with AUTOM (''price improving order'') and must announce, loudly and audibly in the crowd, that he has improved the displayed market. Such ROT or specialist is referred to, in this rule, as a Price Improving ROT/Specialist.

Matching—The other crowd participants, including ROTs and/or the specialist, may match such price improving order via electronic interface with AUTOM and by loudly and audibly announcing their intention to do so, and indicating their size, at any time. If Auto-Quote or Specialized Quote Feed matches the price associated with a price improving order, the specialist and crowd participants shall be deemed to be matching the price improving order under this paragraph.

Further Improvement—the other crowd participants may improve the price improving order by entering an order via an electronic interface with AUTOM.

Trade Allocation—Among the Price Improving ROT/Specialist and matching crowd participants, trades shall be allocated as follows:

(1) Special Allocation: a Price Improving ROT/Specialist shall be entitled to receive the largest number of contracts among all crowd participants that have matched such price improving order, subject to size, as follows:

(a) When a price improving order is matched by one single crowd participant via electronic interface with AUTOM, the Price Improving ROT/Specialist shall be entitled to receive 60% of an incoming order, and the matching crowd participant shall be entitled to receive 40% of an incoming order.

(b) When a price improving order is matched via electronic interface with AUTOM by two or more crowd participants, the Price-Improving ROT/Specialist shall be entitled to receive 40% of an incoming order. If one of the matching crowd participants is the specialist, the specialist shall be entitled to receive of 30% of an incoming order, and any other ROT(s) that matched the Price Improving ROT's order shall be entitled to receive 30% of an incoming order, in the aggregate.

(c) When a Price Improving ROT/Specialist's price improving order is matched via electronic interface with AUTOM by two or more other ROTs in the crowd, the Price Improving ROT/Specialist shall be entitled to receive 40% of an incoming order, and any other ROT(s) that matched the Price Improving ROT's order shall be entitled to receive 60% of an incoming order, in the aggregate.

(d) Any partial contracts shall be rounded up in favor of the Price Improving ROT/Specialist.

(2) The Special Allocation set forth in (a)–(c) above shall remain in effect until:

(a) the price improving order has been executed up to the minimum number of contracts required under Rule 1080, Commentary .04;

(b) the Price Improving ROT/Specialist cancels the price improving order;

(c) the original price improving order is superceded by a new price improving order, unless that new price improving order is cancelled before at least one contract executes at that price (in which case the original price improving order remains subject to special allocation until one of these three conditions occur).

(3) Once the Special Allocation is no longer in effect, all contracts remaining to be executed at the originally improved price (including those remaining of the price improving order) shall be considered on parity and allocated in accordance with Exchange Rule 1014(g)(ii)–(iv). Thus, if the specialist is among the crowd participants remaining on parity, the specialist shall be entitled to receive an Enhanced Specialist Participation in eligible options. The Special Allocation may apply to part of an incoming order (up to the minimum number permitted by Rule 1080, Commentary .04 i.e., 20 contracts), with the rest of an incoming order subject to allocation under Rules 1014(g)(ii)–(iv).

(4) In no event shall a Price Improving ROT/Specialist or crowd participant that matches a price improving order be required to participate in a trade above such Price Improving ROT or crowd participant's stated size.

(5) Notwithstanding the first sentence of Rule 1014(g)(i), neither Rule 119(a)–(d) and (f), nor Rule 120 (insofar as it incorporates those provisions by reference) shall apply to the allocation of trades executed against price-improving orders and orders matching such price improving orders. The Special Allocation set forth above shall apply only to price improving orders and orders matching such price improving orders. No other rule relating to the allocation of contracts shall apply to price improving orders until the Special Allocation ends, which is determined above. The person responsible for allocation of orders shall use best efforts to ensure that price improving orders and crowd participants that match such price improving orders are allocated contracts in accordance with this Rule.

II. Self-Regulatory Organization's Statement of the Purpose of, and Statutory Basis for, the Proposed Rule Change

In its filing with the Commission, the self-regulatory organization included

statements concerning the purpose of and basis for the proposed rule change and discussed any comments it received on the proposed rule change. The text of these statements may be examined at the places specified in Item IV below. The Exchange has prepared summaries, set forth in sections A, B, and C below, of the most significant aspects of such statements.

A. Self-Regulatory Organization's Statement of the Purpose of, and Statutory Basis for, the Proposed Rule Change

1. Purpose and Overview

The purpose of the proposed rule change is to permit Phlx ROTs to place orders directly on the specialist's limit order book, and to encourage Phlx ROTs and specialists to quote competitively in options in which they are registered,[15] by allowing such ROTs to interface electronically with, and to submit proprietary orders through, AUTOM.

Currently, Phlx Rule 1080 provides that, generally, only agency orders may be entered into AUTOM.[16] The proposal would provide that on-floor orders for the proprietary account(s) of ROTs, up to the maximum number of contracts permitted by the Exchange, are eligible for delivery via AUTOM. This is intended to provide ROTs with additional means to enter orders while on the floor of the Exchange other than through open outcry while physically present in the trading crowd, or through a floor broker.

Currently, only Exchange options specialists may access the limit order book electronically. The Exchange believes that allowing Phlx ROTs to place orders directly on the limit order book via electronic interface with AUTOM should level the playing field by eliminating any actual or perceived technological advantage the specialist may have respecting the ability to place orders directly on the limit order book, and thus would provide incentives for all crowd participants to quote competitively.

The proposal would also allow specialists to improve the prevailing market by placing price-improving orders via a similar electronic interface with AUTOM as that used by ROTs. The use of a specific electronic interface is intended to distinguish the specialists' price improving orders under the instant proposed rule from their general two-sided quoting, including by Auto-Quote or specialized quote feed.[17] The Exchange believes that this provision substantially enhances the incentives for all crowd participants engaged as options market-makers, including specialists, to quote competitively.

Under existing Phlx rules, Phlx ROTs are able to improve the Phlx market with respect to a given option series by verbally announcing their trading interest in a loud and audible fashion. A Phlx ROT (or a floor broker on the ROT's behalf) may also ask the specialist to place an order for an ROT's account on the limit order book maintained by the specialist. In either case, the Phlx ROT may establish priority with respect to an incoming order if the ROT's quote or order is first in time.[18]

Inbound orders eligible for execution against ROT or specialist orders entered into AUTOM via electronic interface would be executed by the specialist and allocated initially by the individual responsible for allocating trades under existing Exchange rules. Currently, under the Exchange's Option Floor Procedure Advice (''OFPA'') F–2, the largest participant in a trade is responsible for allocating contracts to crowd participants. In a separate rule proposal, the Exchange has proposed amendments to OFPA F–2 and Rule 1014(g)(iv) that the Phlx represents would further delineate this responsibility.[19] The person responsible for allocating orders would be required to use his or her best efforts to ensure that price-improving orders and orders that match price-improving orders are allocated contracts pursuant to the allocation formula in the proposed rule.[20] No later than January 2004, the Exchange will modify the AUTO–X system and will automatically execute incoming orders against ROT and specialist orders that improve the disseminated price, as well as orders that match such price-improving orders.[21]

It is inherent in the specialist system (the Phlx uses the specialist system) that the specialist controls the limit order book and also the operation of the Auto-Quote.[22] Currently, Phlx ROTs cannot directly place orders on the electronic limit order book or cause the displayed market to reflect a price-improving bid, offer or booked order of the ROT, except by asking the specialist to do so. Thus, specialists could be perceived to have a major technological advantage over ROTs, which could be seen as a competitive advantage. Because of the ROT's dependence on the hearing and reactions of the specialist, the absence of electronic interface with AUTOM for ROTs might be regarded as an impediment to vigorous quoting by ROTs, especially in busy trading crowds, where ROTs might be concerned that specialists might not hear them or properly recognize the time sequence in which an ROT has vocalized a quote. Moreover, this might be seen as an opportunity for a specialist who did not wish an ROT to better the market through price competition to consciously ignore an ROT's quote or order, even if properly verbalized.

The Exchange believes that the enhanced ROT access to the AUTOM system contemplated in this proposal would substantially enhance the incentives of ROTs to quote competitively because they will be able to improve the Phlx market electronically, and thereby increase their prospects for trade participation, rather than merely passively staying on the disseminated market and waiting to receive their allocated participation in AUTO–X trades on the ''Wheel.''[23] By

[15] The Exchange notes that the Commission has directed that the options markets adopt new, or amend existing, rules concerning its automated quotation and execution systems which substantially enhance incentives to quote competitively and reduce disincentives for market participants to act competitively. *See* Securities Exchange Act Release No. 43268 (September 11, 2000), Administrative Proceeding File No. 3–10282.

[16] The Exchange has defined an agency order as any order entered on behalf of a public customer, and does not include any order entered for the account of a broker-dealer, or any account in which a broker-dealer or an associated person of a broker-dealer has any direct or indirect interest. *See, e.g., Phlx* Rule 229.02. *See* also, Securities Exchange Act Release No. 40970 (January 25, 1999), 64 FR 4922 (February 1, 1999) (File No. SR–Phlx–98–44).

[17] A specialist may establish a specialized connection with AUTOM, known as a specialized quote feed, which enables the specialist to provide quotations based on a proprietary pricing model, by-passing the Exchange's Auto-Quote System. *See* Phlx Rule 1080, Commentary .01(c).

[18] *See* Securities Exchange Act Release No. 35033 (November 30, 1994), 59 FR 63152 (December 7, 1994) (File No. SR–Phlx–94–32).

[19] Under the separate rule proposal, if a trade involved a floor broker, the floor broker would be responsible for allocating contracts among crowd participants but could delegate the responsibility to the specialist or an assistant to the specialist under the specialist's supervision (''Assistant''), provided that the specialist (or Assistant) would be responsible for allocating trades. If neither the specialist nor floor broker is involved, but there is more than one buyer or seller, the largest participant would be responsible for allocating trades. If neither the specialist nor floor broker is involved, and there is only one buyer and seller, the seller would be responsible for allocating trades. *See* File No. SR–Phlx–2001–28.

[20] *See* Amendments Nos. 4 and 5.

[21] *See* Amendment No. 1. March 21, 2002 Telephone Conversation.

[22] Auto-Quote is the Exchange's electronic options pricing system, which enables specialists to automatically monitor and instantly update quotations, based on incremental changes in the price of the security underlying the option. *See* Phlx Rule 1080, Commentary .01(a).

[23] The ''Wheel'' is a feature of AUTOM that provides an automated mechanism for assigning specialists and ROTs signed on the Wheel for a

Continued

providing a means of quote improvement that is not dependent on the hearing, reaction time, and perhaps ''good will'' of the specialist, the Exchange believes that the proposed rule change substantially reduces ROTs' actual or perceived disincentives to act competitively.

Nothing in this proposal would eliminate the current ability of Phlx ROTs to price improve through the customary method of open outcry (or to submit orders through Phlx floor brokers) or alter the priority of Phlx ROT bids/offers verbalized in the crowd or submitted through floor brokers. Rather, the proposal offers Phlx ROTs an additional method of price competition, by means of order entry via electronic interfaces.

2. Procedural Requirements

The proposal provides for some procedural requirements and limitations applicable to orders entered via the electronic interface. The proposal also includes a rule pertaining to priority, parity, and precedence of orders, applicable *solely* to Phlx specialist and ROT orders that are entered via electronic interface and either improve the displayed Phlx marker or match another order that has improved the displayed market.[24]

In order to be displayed, on-floor orders for the proprietary accounts of ROTs delivered via AUTOM must be for a minimum size of at least the lesser of the AUTO–X guarantee for the option that is the subject of such an order, or 20 contracts.[25] This is to reduce the potential logjam of orders entered electronically on the specialist's limit order book. The Exchange believes that this requirement would enable specialists to continue to meet their obligation to make fair and orderly markets.

Paragraph (g) of Phlx Rule 1014 provides that a Price-Improving ROT/Specialist that enters an order through an electronic interface with AUTOM that results in an improvement in the then prevailing market disseminated by the Exchange (i.e., raises the bid or lowers the offer) must announce, loudly and audibly in the crowd, that he has improved the displayed market. The purpose of this provision is to ensure that other crowd participants (including the specialist) are alerted to the fact that the specialist or an ROT in the crowd has improved the market, thus enabling such other crowd participants to quote competitively by entering matching orders through electronic interface with AUTOM and verbalizing their intention to join in such an improved market, or to better the price (*see* Section 3.C., below).

The proposal would require that an ROT or specialist that posts a bid or offer through electronic interface with AUTOM, and subsequently elects to cancel such a bid or offer, must cancel such bid or offer through the electronic interface. The purpose of this provision is to eliminate the necessity for a specialist to cancel such an order manually upon verbal notification of the cancellation, thereby freeing the specialist to continue maintaining fair and orderly markets.

3. Price-Improving, ''Matching'' and Special Parity Rule

The other crowd participants (including the specialist) may match a price-improving order through an electronic interface with AUTOM, but must loudly and audibly announce their intention to do so, as well as their size. If Auto-Quote or Specialized Quote Feed matches a price-improving order, the specialist and crowd participants on that quote would be deemed to be matching the price-improving order. In such a situation, the ''Special Allocation'' in proposed Phlx Rule 1014(g)(i)(B)(1) would apply until terminated as set forth in Rule 1014(g)(i)(B)(2). Specifically, a ''Special Allocation'' entitles the Price Improving ROT/Specialist to receive the largest number of contracts among all crowd participants that have matched a price-improving order, subject to size.[26] Any partial contracts would be rounded up in favor of the Price Improving ROT/Specialist. In no event shall a Price Improving ROT/Specialist or crowd participant that matches a price-improving order be required to participate in a trade above that Price Improving ROT/Specialist's crowd or participant's size.[27]

The Special Allocation would remain in effect until one of the following takes place: (1) the lesser of 20 contracts or the AUTO–X guarantee for the option that is the subject of the price-improving quote, have been executed against the price-improving quotes eligible to receive an allocation; (2) the ROT or specialist who improved the price cancels the price-improving order; or (3) the original price-improving order is superseded by a new price-improving order.[28] If any of those conditions are satisfied, the special allocation formula would no longer be in effect, and crowd members with orders that have not been filled would be considered to be on parity. If the specialist were one of the crowd members, the specialist would, consistent with applicable exchange rules, be entitled to receive an Enhanced Specialist Participation in eligible options.[29]

Further, proposed Commentary .04 to Phlx Rule 1080 provides that the Exchange will notify all members on the Options Floor when it has completed the development of appropriate interfaces for such proprietary systems and/or deployed such terminals on the Options Floor, and when the use of such electronic interfaces and/or terminals may commence. This provision is included in the proposed rule change because, in the event that the Commission approves this proposal, the Exchange's ability to deploy such interfaces may not coincide with the effective date of the rule. The Exchange believes that the interfaces should be able to be deployed in or around the third quarter 2002.

Finally, the Exchange has determined to work towards the development of a proposal for an alternative model for ROT access, which would involve giving ROTs the ability to electronically post their own quotations in competition with the specialist and to have their own quotation generation models (which might be supplied by the Exchange or third parties, or be independently developed), as opposed

given listed option, on a rotating basis, as contra-side participants to trades executed via AUTO–X. *See* Phlx Rule 1080(g) and Options Floor Procedure Advice F–24.

[24] March 21, 2002 Telephone Conversation.

[25] *See* Amendment No. 1. This requirement applies only to Phlx ROT and specialist orders entered via electronic interface. This requirement is distinguished from the display requirement for all other orders set forth in Options Floor Procedure Advice A–1.

[26] The proposal would entitle a Price Improving ROT/Specialist to participate in at least 60% of the contracts in the transaction if his or her order is matched by one single crowd participant. If the Price Improving ROT/Specialist's order is matched by two or more crowd participants (including the specialist), the Price Improving ROT/Specialist would be entitled to participate in at least 40% of the contracts in the transaction; a matching specialist would be entitled to participate in 30%, and other crowd participants on parity with the Price Improving ROT/Specialist would be entitled to participate in 60% of the contracts in the transaction, in the aggregate. If a Price Improving ROT/Specialist order is matched by two or more crowd participants (but not the specialist), the Price Improving ROT/Specialist would be entitled to participate in 60% of the contracts in the transaction, in the aggregate.

[27] *See* Amendment No. 4.

[28] Unless the new price-improving order is cancelled before at least one contract executes at the price of the new price-improving order. *See* proposed Phlx Rule 1014(g)(B)(2). The Exchange represents that the purpose of this third condition is to eliminate the possibility that a crowd participant could, by placing and then immediately canceling a price-improving order, cause a Price Improving ROT/Specialist to lose their entitlement under the Special Allocation.

[29] *See* Amendment No. 5.

to having their electronic access be limited to sending limit orders on a strike-by-strike basis (the ''Independent Quoting Model'').[30]

This Independent Quoting Model would involve the Exchange adopting a new trade allocation rule similar to that International Securities Exchange (''ISE'') Rule 713. Subject to approval under the governance requirements set forth in the Exchange's rules and in the Act, the Exchange would, if so approved, submit the same to the Commission as the ultimate solution to compliance with Section IV.B.h.(aa) of the Order.[31]

4. Statutory Basis

For these reasons, the proposed rule change is consistent with Section 6 of the Act in general, and with Section 6(b)(5) of the Act specifically, in that it is designed to perfect the mechanisms of a free and open market and the national market system, protect investors and the public interest and promote just and equitable principles of trade by providing Phlx ROTs with increased electronic access to the specialist's limit order book, which should provide incentive for Phlx ROTs to quote competitively, and which in turn should result in competitive pricing and enhanced liquidity on the Exchange specifically, and in the options markets in general.

B. Self-Regulatory Organization's Statement on Burden on Competition

The Phlx does not believe that the proposed rule change will impose any inappropriate burden on competition.

C. Self-Regulatory Organization's Statement on Comments on the Proposed Rule Change Received From Members, Participants or Others

No written comments were either solicited or received.

III. Date of Effectiveness of the Proposed Rule Change and Timing for Commission Action

Within 35 days of the date of publication of this notice in the **Federal Register** or within such longer period (i) as the Commission may designate up to 90 days or such date if it finds such longer period to be appropriate and publishes its reasons for so finding or (ii) as to which the Phlx consents, the Commission will:

(A) By order approve such proposed rule change, or,

(B) Institute proceedings to determine whether the proposed rule change should be disapproved.

[30] *See* Amendment No. 5.

[31] *Id.*

IV. Solicitation of Comments

Interested persons are invited to submit written data, views and arguments concerning the proposed rule change and Amendments Nos. 1–7 thereto. Persons making written submissions should file six copies thereof with the Secretary, Securities and Exchange Commission, 450 Fifth Street, NW, Washington, DC 20549. Copies of the submission, all subsequent amendments, all written statements with respect to the proposed rule change that are filed with the Commission, and all written communications relating to the proposed rule change between the Commission and any person, other than those that may be withheld from the public in accordance with the provisions of 5 U.S.C. 552, will be available for inspection and copying in the Commission's Public Reference Section, 450 Fifth Street, NW, Washington, DC 20549. Copies of such filing will also be available for inspection and copying at the principal office of the Phlx. All submissions should refer to File No. SR–Phlx–2002–04 and should be submitted by July 18, 2002.

For the Commission by the Division of Market Regulation, pursuant to delegated authority.[32]

Margaret H. McFarland,

Deputy Secretary.

[FR Doc. 02–16210 Filed 6–26–02; 8:45 am]

BILLING CODE 8010–01–P

[32] 17 CFR 200.30–3(a)(12).

DEPARTMENT OF STATE

[Public Notice 4055]

Bureau of Educational and Cultural Affairs Request for Grant Proposals: Mexico, Central America, and the Caribbean (MCAC) Regional Educational Advising Coordinator (REAC) Program

SUMMARY: The Educational Information and Resources Branch (ECA/A/S/A) of the Bureau of Educational and Cultural Affairs (ECA) announces an open competition for the Mexico, Central America, and the Caribbean (MCAC) Regional Educational Advising Coordinator (REAC) Program. Public and private non-profit organizations meeting the provisions described in Internal Revenue Code section 26 U.S.C. 501(c)(3) may submit proposals. The REAC organization facilitates the provision of expertise and information through the regional coordinator to educational advisers in the region in consultation with U.S. Embassies and ECA. The REAC program works to support educational information centers in the region and to assist in their professional development. These activities include the sharing of information and materials with the region's advising centers, communicating trends in U.S. education and regional exchange, disseminating information on the latest developments in technology and providing direct guidance through site visits, internships, training and workshops in Mexico, Central America and the Caribbean. The region contains 46 advising centers in the U.S. Department of State-affiliated network. These centers provide comprehensive and unbiased information to interested students, scholars, and other individuals about study opportunities in the U.S.

Program Information

Overview

The Regional Educational Advising Coordinator (REAC) organization will be responsible for providing on-site technical assistance and training to centers in the Mexico, Central America, and the Caribbean Region (MCAC) and for coordinating the establishment of any new advising centers, as directed by individual embassies in consultation with the Branch. The REAC will support all U.S. Department of State-affiliated centers located in the following countries and locations: Mexico, Belize, Costa Rica, Cuba, El Salvador, Guatemala, Honduras, Nicaragua, Panama, Guyana, Suriname, Anguilla, Antigua, Aruba, Bahamas, Barbados, British Virgin Islands, Cayman Islands, Dominica, Dominican Republic, Grenada, Haiti, Jamaica, Martinique, Montserrat, Nevis, St. Kitts, St. Lucia, St. Vincent and the Grenadines, and Trinidad and Tobago. The MCAC REAC organization should work impartially with all non-governmental organizations, binational centers (such as the Instituto Guatemalteco-Americano or Centro Cultural Costarricense-Norteamericano), Public Affairs Sections located in U.S. embassies and consulates overseas, universities, libraries, etc. involved in educational advising to enable advisers to provide accurate and timely information on U.S. higher educational opportunities. The REAC must work closely with the Branch and Public Affairs Sections throughout the region to help establish priorities for educational advising. Responsibilities for organization for the MCAC REAC will include:

1. Making site visits to advising centers to provide training and conduct needs assessment;
2. Providing information and guidance in response to specific questions related to educational advising, as requested by advising centers;
3. Production of a newsletter, electronic bulletin board or other methods of sharing information among centers, and oversight of regional listserv REAC-MCAC;
4. Organization and oversight of internship training programs for beginning and intermediate advisers to be held in one of the larger, well-staffed, well-trained advising centers, as necessary;
5. Conducting in-country and sub-regional workshops as needed, as determined in consultation with Branch and Public Affairs Sections;
6. Consultations with Embassies and the Branch on the direction and priorities of educational advising;
7. Evaluation and Follow-up

Qualifications required for the coordinator position within the REAC organization include all of the following:

1. Fluent Spanish language ability;
2. Knowledge of educational advising programs and centers;
3. Experience living and traveling in the region, and a demonstrated willingness and ability to undertake an ambitious travel schedule;
4. Knowledge of the system of higher education in the U.S., including such issues as accreditation, distance learning, the admissions process, standardized testing, and financial aid;
5. Organizational skills needed to administer both the internship programs and conferences;
6. Excellent time management skills, communication skills, and computer/internet/listserv skills;
7. Experience in public speaking and in professional training activities;
8. U.S. Citizenship.

The coordinator should plan a rigorous travel schedule at the beginning of his or her tenure in consultation with the Branch and with advising centers/embassies to be visited, in order to conduct site visits consistent with Branch and Public Affairs Section priorities. The proposal should contain a tentative travel plan and should clearly delineate the ability of the organization to make reliable travel arrangements under adverse conditions as well as the willingness and ability of the REAC to undertake a rigorous itinerary.

The proposal should describe all members of the REAC organization's proposed program staff, clearly demonstrating appropriate expertise. Provisions which the organization will take to maintain communication between the coordinator, the advising centers, and ECA/A/S/A should be clearly described.

Guidelines

Pending awarding of funds, the period of this grant is October 1, 2002 to September 30, 2003.

Final awards cannot be made until funds have been appropriated by Congress, allocated and committed through internal ECA procedures.

Programs must comply with J–1 visa regulations. Please refer to Solicitation Package for further information.

Budget Guuidelines

Applicants must submit a comprehensive budget for the entire program, not to exceed $56,000. There must be a summary budget as well as breakdowns reflecting both administrative and program budgets. Applicants may provide separate sub-budgets for each program component, phase, location, or activity to provide clarification. The Bureau encourages applicants to provide maximum levels of cost-sharing and funding from private sources in support of its programs.

Allowable costs for the program include the following:

(1) Salary and benefits
(2) Budget for REAC travel and per diem
(3) Costs for training materials
(4) Costs for training events
(5) Office supplies and expenses
(6) Indirect costs

Please refer to the Solicitation Package for complete budget guidelines and formatting instructions.

Announcement Title and Number: All correspondence with the Bureau concerning this RFGP should reference the above title and number ECA/A/S/A–03–02.

FOR FURTHER INFORMATION CONTACT: The Educational Information and Resources Branch, ECA/A/S/A, room 349 U.S. Department of State, 301 4th Street, SW., Washington, DC 20547, telephone (202) 619–5434, fax (202) 401–1433, *ssheehan@pd.state.gov* to request a Solicitation Package. The Solicitation Package contains detailed award criteria, required application forms, specific budget instructions, and standard guidelines for proposal preparation. Please specify Bureau Program Officer Sharen Sheehan on all other inquiries and correspondence.

Please read the complete **Federal Register** announcement before sending inquiries or submitting proposals. Once the RFGP deadline has passed, Bureau staff may not discuss this competition with applicants until the proposal review process has been completed.

To Download a Solicitation Package via Internet

The entire Solicitation Package may be downloaded from the Bureau's website at http://exchanges.state.gov/education/RFGPs. Please read all information before downloading.

Deadline for Proposals

All proposal copies must be received at the Bureau of Educational and Cultural Affairs by 5 p.m. Washington, DC time on Thursday, August 1, 2002. Faxed documents will not be accepted at any time. Documents postmarked the due date but received on a later date will not be accepted. Each applicant must ensure that the proposals are received by the above deadline.

Applicants must follow all instructions in the Solicitation Package. The original and 6 copies of the application should be sent to: U.S. Department of State, SA–44, Bureau of Educational and Cultural Affairs, Ref.: ECA/A/S/A–03–02, Program Management, ECA/EX/PM, Room 534, 301 4th Street, SW., Washington, DC 20547.

Applicants must also submit the ''Executive Summary'' and ''Proposal Narrative'' sections of the proposal on a 3.5″ diskette, formatted for DOS. These documents must be provided in ASCII text (DOS) format with a maximum line length of 65 characters. The Bureau will transmit these files electronically to the Public Affairs section at the U.S. Embassy for its review, with the goal of reducing the time it takes to get embassy comments for the Bureau's grants review process.

Diversity, Freedom and Democracy Guidelines

Pursuant to the Bureau's authorizing legislation, programs must maintain a non-political character and should be balanced and representative of the diversity of American political, social, and cultural life. ''Diversity'' should be interpreted in the broadest sense and encompass differences including, but not limited to ethnicity, race, gender, religion, geographic location, socio-economic status, and physical challenges. Applicants are strongly encouraged to adhere to the advancement of this principle both in program administration and in program content. Please refer to the review criteria under the 'Support for Diversity' section for specific suggestions on incorporating diversity into the total

proposal. Public Law 104–319 provides that ''in carrying out programs of educational and cultural exchange in countries whose people do not fully enjoy freedom and democracy,'' the Bureau ''shall take appropriate steps to provide opportunities for participation in such programs to human rights and democracy leaders of such countries.'' Public Law 106–113 requires that the governments of the countries described above do not have inappropriate influence in the selection process. Proposals should reflect advancement of these goals in their program contents, to the full extent deemed feasible.

Review Process

The Bureau will acknowledge receipt of all proposals and will review them for technical eligibility. Proposals will be deemed ineligible if they do not fully adhere to the guidelines stated herein and in the Solicitation Package. All eligible proposals will be reviewed by the program office, as well as the Public Diplomacy section overseas, where appropriate. Eligible proposals will be subject to compliance with Federal and Bureau regulations and guidelines and forwarded to Bureau grant panels for advisory review. Proposals may also be reviewed by the Office of the Legal Adviser or by other Department elements. Final funding decisions are at the discretion of the Department of State's Assistant Secretary for Educational and Cultural Affairs. Final technical authority for grants resides with the Bureau's Grants Officer.

Review Criteria

Technically eligible applications will be competitively reviewed according to the criteria stated below. These criteria are not rank ordered and all carry equal weight in the proposal evaluation:

1. *Program planning:* Detailed agenda and relevant work plan should demonstrate substantive undertakings and logistical capacity. Agenda and plan should adhere to the program overview and guidelines described above.

2. *Ability to achieve program objectives:* Objectives should be reasonable, feasible, and flexible. Proposals should clearly demonstrate how the institution will meet the program's objectives and plan.

3. *Support of Diversity:* Proposals should demonstrate substantive support of the Bureau's policy on diversity. Achievable and relevant features should be cited in both program administration (selection of participants, program venue and program evaluation) and program content (orientation and wrap-up sessions, program meetings, resource materials and follow-up activities).

4. *Institutional Capacity:* Proposed personnel and institutional resources should be adequate and appropriate to achieve the program or project's goals.

5. *Institution's Record/Ability:* Proposals should demonstrate an institutional record of successful exchange programs, including responsible fiscal management and full compliance with all reporting requirements for past Bureau grants as determined by Bureau Grant Staff. The Bureau will consider the past performance of prior recipients and the demonstrated potential of new applicants.

6. *Project Evaluation:* Proposals should include a plan to evaluate the activity's success, both as the activities unfold and at the end of the program. A draft survey questionnaire or other technique plus description of a methodology to use to link outcomes to original project objectives is recommended. Successful applicants will be expected to submit intermediate reports after each project component is concluded or quarterly, whichever is less frequent.

7. *Cost-effectiveness:* The overhead and administrative components of the proposal should be kept as low as possible. All other items should be necessary and appropriate.

8. *Cost-sharing:* Proposals should maximize cost-sharing through other private sector support as well as institutional direct funding contributions.

Authority

Overall grant making authority for this program is contained in the Mutual Educational and Cultural Exchange Act of 1961, Public Law 87–256, as amended, also known as the Fulbright-Hays Act. The purpose of the Act is ''to enable the Government of the United States to increase mutual understanding between the people of the United States and the people of other countries * * *; to strengthen the ties which unite us with other nations by demonstrating the educational and cultural interests, developments, and achievements of the people of the United States and other nations * * *and thus to assist in the development of friendly, sympathetic and peaceful relations between the United States and the other countries of the world.'' The funding authority for the program above is provided through legislation.

Notice

The terms and conditions published in this RFGP are binding and may not be modified by any Bureau representative. Explanatory information provided by the Bureau that contradicts published language will not be binding. Issuance of the RFGP does not constitute an award commitment on the part of the Government. The Bureau reserves the right to reduce, revise, or increase proposal budgets in accordance with the needs of the program and the availability of funds. Awards made will be subject to periodic reporting and evaluation requirements.

Notification

Final awards cannot be made until funds have been appropriated by Congress, allocated and committed through internal Bureau procedures.

Dated: June 25, 2002.

Rick A. Ruth,

Principal Deputy Assistant Secretary, Bureau of Educational and Cultural Affairs, Department of State.

[FR Doc. 02–16156 Filed 6–26–02; 8:45 am]

BILLING CODE 4710–05–P

DEPARTMENT OF STATE

[Public Notice 4056]

Bureau of Educational and Cultural Affairs Request for Grant Proposals: Educational Advising in Mexico City

SUMMARY: The Educational Information and Resources Branch of the Bureau of Educational and Cultural Affairs (ECA) announces an open competition to conduct educational advising in Mexico City about post-secondary educational opportunities in the U.S. Public and private non-profit organizations meeting the provisions described in Internal Revenue Code section 26 U.S.C. 501(c)(3) may submit proposals for administering educational advising activities in Mexico City, Mexico. The educational advising effort in Mexico City would be part of the network of over 400 Department of State-affiliated advising centers worldwide. These centers provide comprehensive and unbiased information and guidance to all interested students and scholars about accredited study opportunities in the U.S.

Program Information

Overview

The size of the university population in Mexico City and its proximity to the U.S. make it a critical location for providing accurate, unbiased information about how to gain access to educational opportunities in the U.S. Services provided by the center must include group and/or individual advising informational sessions. The advising center should provide accurate

information and advising on the following topics: U.S. colleges, universities, and other accredited higher education institutions; the application process to U.S. universities; majors and fields of study; testing requirements; life in the U.S.; scholarship programs and financial aid; and pre-departure orientation. Advisers will be eligible for training opportunities sponsored by the Bureau, which will also provide a limited selection of reference books and materials to the center.

The proposal should describe in detail the center's location, facilities (including the size and capacity of its public spaces) and hours of operation, staffing pattern (including percentage of time each employee will devote to advising activities, and a description of their functions and responsibilities), an estimated budget for the office, and information delineating the services that will be provided by the center. The center should be capable of serving approximately 4,000 or more client inquiries per month, including visits, emails, faxes, and phone calls. The proposal should also include a description of what methods the center and its headquarters or sponsoring office will pursue to find additional sources of funding to supplement ECA funding for operating costs.

The proposal should also include information about any websites that will be developed to support the overall educational advising effort in Mexico.

In addition, the following elements should be addressed in the proposal:

Outreach

The center is encouraged to reach a wider and more diverse audience by organizing lectures and events outside the center. These outreach activities should provide general information about study opportunities in the U.S. and about the additional services and resources that may be obtained by visiting the advising center. Proposals should include outreach programs for the center and a detailed description of activities along with a proposed schedule of visits. Outreach activities should include emphasis on reaching diverse and younger (secondary school age) populations.

Statistics

The center must submit monthly statistics on the numbers of clients served to the Mexico, Central American, and Caribbean (MCAC) Regional Educational Advising Coordinator (REAC). The statistics should track visitors to the center, phone calls, faxes, letters, emails, and website hits. The center must also be responsive to special requests for information from the MCAC REAC or the Bureau's Educational Information and Resources Branch. The proposal should also explain how the center will work with the Public Affairs and consular sections of the U.S. Embassy in Mexico City to collect information on the usage of the center from applicants for student visas.

Fund-Raising/Cost Defrayment

The proposal should explain what measures the advising center will take to generate income and to reduce operating costs. A general introduction to study opportunities in the U.S. and access to basic resources must be available to all interested persons free of charge. To help cover the costs of operation, the center may charge a fee for specialized services (such as individual advising or test preparation materials), that is reasonable by local standards to keep services accessible to the majority of the population. Examples of cost-defrayment strategies which centers are encouraged to implement include using volunteers and charging for photocopying. The proposal should clearly indicate how savings/income will be applied to the operating costs of the advising center.

Coordination and Communication

The Mexico City educational advising center should help to coordinate major events such as adviser training workshops and advising fairs with other educational advising centers in the region to prevent overlap and provide visiting representatives of U.S. institutions the opportunity to participate in multiple advising fairs on the same trip.

The center should participate in appropriate listservs and maintain contact with other educational advisers in MCAC and other regions.

Professional Standards, Guidelines and Development

Educational advisers should adhere to the OSEAS Standards of Ethical Conduct adopted by NAFSA: Association of International Educators.

Guidelines

Pending availability of funds, the period of this grant is October 1, 2002 to September 30, 2003. Final awards cannot be made until funds have been appropriated by Congress, allocated and committed through internal ECA Bureau procedures.

Programs must comply with J–1 visa regulations. Please refer to Solicitation Package for further information.

Budget Guidelines

The Bureau anticipates awarding one grant in the amount of $70,000 to support program and administrative costs required to implement this program. The Bureau encourages applicants to provide maximum levels of cost-sharing and funding from private sources in support of its programs. Grants awarded to eligible organizations with less than four years of experience in conducting international exchange programs will be limited to $60,000. Applicants must submit a comprehensive budget for the entire program, not to exceed $70,000. There must be a summary budget as well as breakdowns reflecting both administrative and program budgets.

Allowable costs for the program include the following:

(1) Salaries and benefits

(2) Office supplies and expenses, including rent, communications, postage and shipping

(3) Outreach and publicity costs

(4) Indirect costs

Please refer to the Solicitation Package for complete budget guidelines and formatting instructions.

Announcement Title and Number

All correspondence with the Bureau concerning this RFGP should reference the above title and number ECA/A/S/A–03–03.

FOR FURTHER INFORMATION CONTACT: The Educational Information and Resources Branch, ECA/A/S/A, room 349 U.S. Department of State, 301 4th Street, SW., Washington, DC 20547, telephone (202) 619–5434, fax (202) 401–1433, *ssheehan@pd.state.gov* to request a Solicitation Package. The Solicitation Package contains detailed award criteria, required application forms, specific budget instructions, and standard guidelines for proposal preparation. Please specify Bureau Program Officer Sharen Sheehan on all other inquiries and correspondence.

Please read the complete **Federal Register** announcement before sending inquiries or submitting proposals. Once the RFGP deadline has passed, Bureau staff may not discuss this competition with applicants until the proposal review process has been completed.

To Download a Solicitation Package via Internet

The entire Solicitation Package may be downloaded from the Bureau's website at *http://exchanges.state.gov/education/RFGPs*. Please read all information before downloading.

Deadline for Proposals

All proposal copies must be received at the Bureau of Educational and Cultural Affairs by 5 p.m. Washington, DC time on Thursday, August 1, 2002. Faxed documents will not be accepted at any time. Documents postmarked the due date but received on a later date will not be accepted. Each applicant must ensure that the proposals are received by the above deadline.

Applicants must follow all instructions in the Solicitation Package. The original and 6 copies of the application should be sent to: U.S. Department of State, SA–44, Bureau of Educational and Cultural Affairs, Ref.: ECA/A/S/A–03–03, Program Management, ECA/EX/PM, Room 534, 301 4th Street, SW., Washington, DC 20547.

Applicants must also submit the ''Executive Summary'' and ''Proposal Narrative'' sections of the proposal on a 3.5″ diskette, formatted for DOS. These documents must be provided in ASCII text (DOS) format with a maximum line length of 65 characters. The Bureau will transmit these files electronically to the Public Affairs Section at the US Embassy for its review, with the goal of reducing the time it takes to get embassy comments for the Bureau's grants review process.

Diversity, Freedom and Democracy Guidelines

Pursuant to the Bureau's authorizing legislation, programs must maintain a non-political character and should be balanced and representative of the diversity of American political, social, and cultural life. ''Diversity'' should be interpreted in the broadest sense and encompass differences including, but not limited to ethnicity, race, gender, religion, geographic location, socio-economic status, and physical challenges. Applicants are strongly encouraged to adhere to the advancement of this principle both in program administration and in program content. Please refer to the review criteria under the 'Support for Diversity' section for specific suggestions on incorporating diversity into the total proposal. Public Law 104–319 provides that ''in carrying out programs of educational and cultural exchange in countries whose people do not fully enjoy freedom and democracy,'' the Bureau ''shall take appropriate steps to provide opportunities for participation in such programs to human rights and democracy leaders of such countries.'' Public Law 106–113 requires that the governments of the countries described above do not have inappropriate influence in the selection process. Proposals should reflect advancement of these goals in their program contents, to the full extent deemed feasible.

Review Process

The Bureau will acknowledge receipt of all proposals and will review them for technical eligibility. Proposals will be deemed ineligible if they do not fully adhere to the guidelines stated herein and in the Solicitation Package. All eligible proposals will be reviewed by the program office, as well as the Public Diplomacy section overseas, where appropriate. Eligible proposals will be subject to compliance with Federal and Bureau regulations and guidelines and forwarded to Bureau grant panels for advisory review. Proposals may also be reviewed by the Office of the Legal Adviser or by other Department elements. Final funding decisions are at the discretion of the Department of State's Assistant Secretary for Educational and Cultural Affairs. Final technical authority for assistance awards grants resides with the Bureau's Grants Officer.

Review Criteria

Technically eligible applications will be competitively reviewed according to the criteria stated below. These criteria are not rank ordered and all carry equal weight in the proposal evaluation:

1. *Program planning:* Detailed agenda and relevant work plan should demonstrate substantive undertakings and logistical capacity. Plan should adhere to the program overview and guidelines described above.

2. *Ability to achieve program objectives:* Objectives should be reasonable, feasible, and flexible. Proposals should clearly demonstrate how the institution will meet the program's objectives and plan.

3. *Multiplier effect/impact:* Proposed programs should strengthen long-term mutual understanding, including maximum sharing of information and establishment of long-term institutional and individual linkages.

4. *Support of Diversity:* Proposals should demonstrate substantive support of the Bureau's policy on diversity. Achievable and relevant features should be cited in both program administration (selection of participants, program venue and program evaluation) and program content (orientation and wrap-up sessions, program meetings, resource materials and follow-up activities).

5. *Institutional Capacity:* Proposed personnel and institutional resources should be adequate and appropriate to achieve the program or project's goals.

6. *Institution's Record/Ability:* Proposals should demonstrate an institutional record of successful exchange programs, including responsible fiscal management and full compliance with all reporting requirements for past Bureau grants as determined by Bureau Grant Staff. The Bureau will consider the past performance of prior recipients and the demonstrated potential of new applicants.

7. *Project Evaluation:* Proposals should include a plan to evaluate the activity's success, both as the activities unfold and at the end of the program. A draft survey questionnaire or other technique plus description of a methodology to use to link outcomes to original project objectives is recommended. Successful applicants will be expected to submit intermediate reports after each project component is concluded or quarterly, whichever is less frequent.

8. *Cost-effectiveness:* The overhead and administrative components of the proposal should be kept as low as possible. All other items should be necessary and appropriate.

9. *Cost-sharing:* Proposals should maximize cost-sharing through other private sector support as well as institutional direct funding contributions.

Authority

Overall grant making authority for this program is contained in the Mutual Educational and Cultural Exchange Act of 1961, Public Law 87–256, as amended, also known as the Fulbright-Hays Act. The purpose of the Act is ''to enable the Government of the United States to increase mutual understanding between the people of the United States and the people of other countries * * *; to strengthen the ties which unite us with other nations by demonstrating the educational and cultural interests, developments, and achievements of the people of the United States and other nations * * * and thus to assist in the development of friendly, sympathetic and peaceful relations between the United States and the other countries of the world.'' The funding authority for the program above is provided through legislation.

Notice

The terms and conditions published in this RFGP are binding and may not be modified by any Bureau representative. Explanatory information provided by the Bureau that contradicts published language will not be binding. Issuance of the RFGP does not constitute an award commitment on the

part of the Government. The Bureau reserves the right to reduce, revise, or increase proposal budgets in accordance with the needs of the program and the availability of funds. Awards made will be subject to periodic reporting and evaluation requirements.

Notification

Final awards cannot be made until funds have been appropriated by Congress, allocated and committed through internal Bureau procedures.

Dated: June 20, 2002.

Rick A. Ruth,

Principal Deputy Assistant Secretary, Bureau of Educational and Cultural Affairs, Department of State.

[FR Doc. 02–16155 Filed 6–26–02; 8:45 am]

BILLING CODE 4710–05–P

DEPARTMENT OF TRANSPORTATION

Federal Aviation Administration

Intent To Prepare Environmental Impact Statement and Hold Environmental Scoping Meetings for Airport Master Plan Development at T.F. Green Airport, Warwick, RI

AGENCY: Federal Aviation Administration, DOT.

ACTION: Notice of intent to prepare Environmental Impact Statement and hold environmental scoping meetings.

SUMMARY: The Federal Aviation Administration announces that it will prepare an Environmental Impact Statement (EIS) for projects proposed in the Airport Master Plan for T.F. Green Airport in Warwick, Rhode Island. Public scoping meetings will be held to ensure that all significant issues related to the proposed projects are identified.

FOR FURTHER INFORMATION CONTACT: Mr. John Silva, Federal Aviation Administration, Airports Division, ANE–600, 12 New England Executive Park, Burlington, MA 01803; Telephone 781–238–7602.

SUPPLEMENTARY INFORMATION: The Rhode Island Airport Corporation (RIAC) is preparing an Airport Master Plan and related Airport Layout Plan to identify and depict future improvements to T.F. Green Airport in Warwick, Rhode Island. The Federal Aviation Administration will prepare an EIS prior to approval of RIAC's Airport Layout Plan or funding development depicted thereon.

Projects identified in the Airport Master Plan that will be assessed in the EIS include reconstruction of Runway 16–34, provision for full Run way Safety Areas for Runway 16–34, potential extension of Runway 16–34, potential extension of Runway 5R–23L, potential closure of Runway 5L–23R, taxiway improvements, terminal development, and associated ancillary development. Additional development that may be assessed in this EIS include the expansion of the aircraft Remain Overnight areas and vehicle parking, and peripheral roadway improvements.

Alternatives assessed in the EIS may include, but may not be limited to: No-Build/No-Action; Reconstruct and shorten Runway 16/34 to accommodate standard safety areas within the existing [airport] footprint and construct associated terminal and roadway projects; Reconstruct Runway 16/34 at its existing pavement length with standard safety areas and construct associated terminal and roadway projects; and Extend Runway 16/34 and Runway 5R–23L, with standard safety areas and construct associated terminal and roadway projects.

The Rhode Island Airport Corporation has convened a Study Resource Committee for community representation during the continued development of the Airport Master Plan Update. To ensure that the full range of issues related to the future Master Plan are addressed and that all significant issues are identified, FAA intends to consult and coordinate with federal, state and local agencies which have jurisdiction by law or have specific expertise with respect to any environmental impacts that may result from any selected projects. An environmental scoping meeting for these agencies will be held at the T.F. Green Airport, in the Mary Brennan Board Room located behind the Delta ticket counter at the Airport, at 1 p.m. on Thursday, July 25, 2002. FAA will also solicit input from the public with a public scoping meeting on Thursday, July 25, 2002, from 5 p.m. to 8 p.m at Toll Gate High School, 575 Centerville Road, Warwick, Rhode Island. In addition to providing input at the scoping meetings, agencies and the public may submit written comments on the scope of the environmental study to the address identified in the **FOR FURTHER INFORMATION CONTACT** section of this notice. Comments must be submitted by August 9, 2002.

Issued in Burlington, Massachusetts, on June 12, 2002.

Vincent A. Scarano,

Manager, Airports Division, New England Region, Federal Aviation Administration.

[FR Doc. 02–16167 Filed 6–26–02; 8:45 am]

BILLING CODE 4910–13–M

DEPARTMENT OF TRANSPORTATION

Federal Aviation Administration

RTCA Special Committee 199: Airport Security Access Control Systems

AGENCY: Federal Aviation Administration (FAA), DOT.

ACTION: Notice of RTCA Special Committee 199 meeting.

SUMMARY: The FAA is issuing this notice to advise the public of a meeting of RTCA Special Committee 199: Airport Security Access Control Systems.

DATES: The meeting will be held on July 12, 2002 starting at 9 a.m.

ADDRESSES: The meeting will be held at RTCA, Inc., 1828 L Street, NW, Suite 805, Washington, DC 20036.

FOR FURTHER INFORMATION CONTACT: RTCA Secretariat, 1828 L Street, NW, Suite 805, Washington, DC 20036; telephone (202) 833–9339; fax (202) 833–9434; Web site *http://www.rtca.org.*

SUPPLEMENTARY INFORMATION: Pursuant to section 10(a)(2) of the Federal Advisory Committee Act (Pub. L. 92–463, 5 U.S.C., Appendix 2), notice is hereby given for a Special Committee 199 meeting. The agenda will include:

- July 12:
  - Opening Session (Welcome, Introductory and Administrative Remarks, Agenda Overview, Review Minutes of Previous Meeting, Action Items from Last Meeting)
  - Workgroup Reports, New Standard Text, and Comments from Members, as appropriate (Document Sections 1–4, Biometrics workgroup, Smart card workgroup, Database workgroup)
  - Transportation Security Administration—Activity Review
  - Closing Session (Any Other Business, Establish Agenda for Next Meeting, Date and Place of Next Meeting)
  - Workgroups Breakout Session

Attendance is open to the interested public but limited to space availability. With the approval of the chairmen, members of the public may present oral statements at the meeting. Persons wishing to present statements or obtain information should contact the person listed in the **FOR FURTHER INFORMATION CONTACT** section. Members of the public may present a written statement to the commitment at any time.

Issued in Washington, DC, on June 17, 2002.

Norman T. Fujisaki,

Deputy Director, System Architecture and Investment Analysis.

[FR Doc. 02–16168 Filed 6–26–02; 8:45 am]

BILLING CODE 4910–13–M

DEPARTMENT OF TRANSPORTATION

Federal Aviation Administration

Notice of Intent To Rule on Request To Release Airport Property at the Snohomish County Airport/Paine Field, Everett, WA

AGENCY: Federal Aviation Administration (FAA), DOT.

ACTION: Notice of request to release airport property.

SUMMARY: The FAA proposes to rule and invite public comment on the release of land at Snohomish County Airport/Paine Field under the provisions of Section 125 of the Wendell H. Ford Aviation Investment Reform Act for the 21st Century (AIR 21).

DATES: Comments must be received on or before July 22, 2002.

ADDRESSES: Comments on this application may be mailed or delivered to the FAA at the following address: Mr. J. Wade Bryant, Manager, Federal Aviation Administration, Northwest Mountain Region, Seattle Airports District Office, 1601 Lind Avenue, SW., Suite 250, Renton, Washington 98055–4056.

In addition, one copy of any comments submitted to the FAA must be mailed or delivered to Mr. Dave Waggoner, Airport Director, 3220–100th Street, SW., Everett, Washington 98204–1390.

FOR FURTHER INFORMATION CONTACT: Mr. Jeff Winter, Project Manager, Federal Aviation Administration, Northwest Mountain Region, Seattle Airports District Office, 1601 Lind Avenue, SW., Suite 250, Renton, Washington 98055–4056.

The request to release property may be reviewed in person at this same location, by appointment.

SUPPLEMENTARY INFORMATION: The FAA invites public comment on the request to release property at the Snohomish County Airport/Paine Field under the provisions of the AIR 21.

On May 30, 2002, the FAA determined that the request to release property at Snohomish County Airport/Paine Field submitted by the county met the procedural requirements of the Federal Aviation Regulations, Part 155. The FAA may approve the request, in whole or in part, no later than July 22, 2002.

The following is a brief overview of the request.

The Smohomish County Airport/Paine Field requests the release of 14.50 acres of non-aeronautical airport property to the Snohomish County Parks Department. The purpose of this release is to transfer land, which has been predominately leased by the Parks Department from the airport for nearly 20 years. The Parks Department plans to continue to use the property as a little league ballpark facility. The parcel proposed for sale has not been used for aviation purposes and no aeronautical use of the property is planned or anticipated. Snohomish County, a political subdivision of the State of Washington, on behalf of the Snohomish County Airport/Paine Field requests the release from the terms, conditions, reservations, and restrictions imposed upon the property deeded to the Airport by the United States of America, and the release of the subject property from any assurances of the County as sponsor as contained in any FAAP, ADAP, or AIP grant agreement. The release of the property will benefit the users of the airport as the fair market value revenues generated from the sale of this property will be applied to offset costs incurred by the airport for the 2000 Runway Safety Area Project. Any person may inspect the request in person at the FAA office listed under **FOR FURTHER INFORMATION CONTACT.**

In addition, any person may, upon request, inspect the application, notice and other documents germane to the application in person at the Snohomish County Airport, 3220—100th Street, SW., Everett, Washington 98204–1390.

Issued in Renton, Washington on May 30, 2002.

J. Wade Bryant,

Manager, Seattle Airports District Office.

[FR Doc. 02–16169 Filed 6–26–02; 8:45 am]

BILLING CODE 4910–13–M

DEPARTMENT OF TRANSPORTATION

Maritime Administration

[Docket No. MARAD–2002–12545]

Information Collection Available for Public Comments and Recommendations

ACTION: Notice and request for comments.

SUMMARY: In accordance with the Paperwork Reduction Act of 1995, this notice announces the Maritime Administration's (MARAD's) intentions to request extension of approval for three years of a currently approved information collection.

DATES: Comments should be submitted on or before August 26, 2002.

FOR FURTHER INFORMATION CONTACT: Kathleen Dunn, Maritime Administration, Office of Ports and Domestic Shipping, 400 Seventh Street Southwest, Washington, DC 20590. Telephone: 202–366–2307, FAX: 202–366–6988; or E-mail: *kathleen.dunn@marad.dot.gov.* Copies of this collection can also be obtained from that office.

SUPPLEMENTARY INFORMATION:

Title of Collection: Application for Waiver of the Coastwise Trade Laws for Small Passenger Vessels.

Type of Request: Extension of currently approved information collection.

OMB Control Number: 2133–0529.

Form Numbers: None.

Expiration Date of Approval: December 31, 2002.

Summary of Collection of Information: Owners of ship vessels desiring waiver of the coastwise trade laws affecting small passenger vessels will be required to file a written application and justification for waiver to the Maritime Administration (MARAD). The agency will review the application and make a determination whether to grant the requested waiver.

Need and Use of the Information: MARAD requires the information in order to process applications for waivers of the coastwise laws and to determine the effect of waivers of the coastwise trade laws on United States vessel builders and United States-built vessel coastwise trade businesses.

Description of Respondents: Small passenger vessel owners desirous of operating in the coastwise trade.

Annual Responses: one.

Annual Burden: one hour.

Comments: Comments should refer to the docket number that appears at the top of this document. Written comments may be submitted to the Docket Clerk, U.S. DOT Dockets, Room PL–401, 400 Seventh Street, SW., Washington, DC 20590. Comments may also be submitted by electronic means via the Internet at *http://dmses.dot.gov/submit.* Specifically address whether this information collection is necessary for proper performance of the functions of the agency and will have practical utility, accuracy of the burden estimates, ways to minimize this burden, and ways to enhance the quality, utility, and clarity of the information to be collected. All

comments received will be available for examination at the above address between 10 a.m. and 5 p.m. EDT (or EST), Monday through Friday, except Federal Holidays. An electronic version of this document is available on the World Wide Web at *http://dms.dot.gov.*

Dated: June 21, 2002.

By Order of the Maritime Administrator.

Joel C. Richard,

Secretary, Maritime Administration.

[FR Doc. 02–16204 Filed 6–27–02; 8:45 am]

BILLING CODE 4910–81–P

DEPARTMENT OF TRANSPORTATION

Maritime Administration

[Docket Number: MARAD–2002–12540]

Requested Administrative Waiver of the Coastwise Trade Laws

AGENCY: Maritime Administration, Department of Transportation.

ACTION: Notice of deadline for submitting waiver applications under existing waiver authority.

SUMMARY: Pursuant to Public Law 105–383, the Secretary of Transportation, as represented by the Maritime Administration (MARAD), is authorized to grant waivers of the U.S.-build requirement of the coastwise laws under certain circumstances. However, MARAD's authority to grant waivers expires September 30, 2002. To allow adequate time for application processing and public comment, all new applications should be received by MARAD as soon as possible but no later than August 1, 2002. Any certificate or endorsement already issued shall continue in effect until otherwise invalidated or revoked under chapter 121 of title 46, United States Code.

FOR FURTHER INFORMATION CONTACT: Kathleen Dunn, U.S. Department of Transportation, Maritime Administration, MAR–832 Room 7201, 400 Seventh Street, SW., Washington, DC 20590. Telephone 202–366–2307.

SUPPLEMENTARY INFORMATION: Title V of Public Law 105–383 provides authority to the Secretary of Transportation to administratively waive the U.S.-build requirements of the Jones Act, Section 27 of the Merchant Marine Act of 1920, as amended, 46 App. U.S.C. 883, and other statutes, for small commercial passenger vessels (no more than 12 passengers). This authority has been delegated to the Maritime Administration per 49 CFR § 1.66, Delegations to the Maritime Administrator, as amended.

In order to implement the law, a set of procedures has been established to expedite waiver processing. As part of the application procedure MARAD requires a period of public notice, which includes the publication of applications for a waiver for 30 days for public review in the **Federal Register**.

After the public notice period MARAD uses all sources available to determine if there will be an ''undue adverse affect'' on existing operators and boat builders. The waiver will not be issued if it is determined by MARAD that the action will unduly adversely affect operators of U.S.-built vessels or U.S. shipyards. Lastly, there is a review procedure and a waiver revocation process if the vessel's use changes substantially after the waiver is issued and the change causes adverse impact.

It is MARAD's goal to make all waiver decisions by September 16, 2002 to include the Maritime Administrator's 10-day recision period before waiver authority expires September 30, 2002.

Basic Eligibility Requirements

(a) The vessel must have been built outside the United States and be at least three years old.

(b) The vessel will not be allowed to carry more than 12 passengers.

(c) The vessel must be of at least 5 net tons and not registered under the laws of a foreign country.

(d) The vessel's ownership must meet U.S. citizenship requirements.

(e) The vessel must meet all other U.S. Coast Guard requirements for a Coastwise Trade Endorsement before it can engage in commercial service. It is the responsibility of the applicant to ensure a proposed vessel meets these standards. For information, please contact the Coast Guard's National Vessel Documentation Center on 1–800–799–8362.

How to Make Application

Applications should reach us no later than August 1, 2002 since our waiver authority expires September 30, 2002. Also, because US Postal Service mail has been delayed in reaching our office since October 2001 you may wish to use an alternate carrier to submit your request. Please apply in writing to the Maritime Administration at the following address. Secretary, Maritime Administration, MAR–120 Room 7210, 400 7th Street, SW., Washington, DC 20590.

The application will be for an administrative waiver of the coastwise laws of the United States for an eligible vessel to carry no more than twelve (12) passengers for hire. The application need not be in any particular format, but must be signed and contain the following information:

(a) Name of vessel including official or state registration number, and owner for which waiver is requested.

(b) Size, capacity and tonnage of vessel (state whether tonnage is measured pursuant to 46 U.S.C. 14502, or otherwise, and if otherwise, how measured).

(c) Intended use for vessel, including geographic region of intended operation and trade. [A good definition of the geographic region is important because it will assist MARAD in determining if the issuance of a waiver will have an adverse impact on current operators. The waiver, if granted, will limit the operation of the vessel to the geographic area specified by the applicant.]

(d) Date and place of construction and (if applicable) rebuilding. (If applicant is unable to determine the origin of the vessel, foreign construction will be assumed).

(e) Name, address, and telephone number of vessel owner.

(f) A statement on the impact this waiver will have on other commercial passenger vessel operators, including a statement describing the operations of existing operators.

(g) A statement on the impact this waiver will have on U.S. shipyards.

You must enclose a non-refundable application fee for each waiver requested, in the form of a check or money order for $300, made out to the order of ''Maritime Administration—Transportation.''

MARAD may ask additional questions of the applicant and, as part of the application review process, consider public comment, internal investigation and analysis, or any other sources or information deemed appropriate.

Process

Your waiver request will be published in the **Federal Register** as soon as practicable for a period of 30 days for public comment. After the 30-day public comment period, MARAD will review all information available and issue a decision. It is our goal to make a decision on every application by September 16, 2002.

A complete copy of the formal rule regarding this program can be found on the World Wide Web at *http://dms.dot.gov.* Once into the Document Management System, ''search'' under docket number 5915, the final rule appears as the last document entered, document 6.

Dated: June 24, 2002.

By Order of the Maritime Administrator.

Joel C. Richard,

Secretary, Maritime Administration.

[FR Doc. 02–16267 Filed 6–26–02; 8:45 am]

BILLING CODE 4910–81–P

DEPARTMENT OF TRANSPORTATION

Bureau of Transportation Statistics

Grant Program for Research and Development in the Field of Transportation Statistics

AGENCY: Bureau of Transportation Statistics (BTS), DOT.

ACTION: Notice of new grant cycle.

SUMMARY: The BTS supports its goal of advancing the field of transportation statistics through the Transportation Statistics Research Grants program. This notice solicits applications for projects that support the development of the field of transportation statistics; and/or involve research or development in transportation statistics. It outlines the purpose, goals, and general procedures for application and award. For this cycle, BTS will make available up to approximately $256,000 in grant funds to eligible organizations.

DATES: For BTS to consider your application, we must receive it by August 7, 2002, at 5 p.m. Eastern Standard Time. Applications received after August 7, 2002, will be held for the next cycle, which is anticipated to be every six to twelve months, unless you request in writing that your application be returned.

ADDRESSES: You must send six copies of the application package to the BTS Grants Program, Room 3117, Bureau of Transportation Statistics, U.S. Department of Transportation, 400 Seventh Street, SW., Washington, DC 20590.

FOR FURTHER INFORMATION CONTACT: Promod Chandhok, Office of Statistical Programs, Bureau of Transportation Statistics, Room 3117, 400 Seventh Street, SW., Washington, DC 20590; phone (202) 366–2158; fax: (202) 493–0568; e-mail: *promod.chandhok@bts.gov.*

SUPPLEMENTARY INFORMATION:

I. Background—Advancing the Discipline of Transportation Statistics

The purpose of this grant program is to provide financial assistance to eligible organizations to help advance the discipline of transportation statistics. These grants are authorized by section 5109 of the Transportation Equity Act for the 21st Century (TEA–21) (Public Law 105–178 (1998), codified at 49 U.S.C. 111(g)). BTS anticipates awarding up to $500,000 per year in grants for projects that (1) support development of the field of transportation statistics; and/or (2) advance research or development in transportation statistics.

BTS is a separate operating administration within the U.S. Department of Transportation (DOT). Its mission is to lead in developing transportation data and information of high quality, and to advance their effective use in public and private transportation decision-making. In accomplishing this mission, BTS works to improve six key attributes of transportation data and analysis—quality, comparability, completeness, timeliness, relevance, and utility.

Our ultimate goal is to make transportation better—to enhance safety, mobility, economic growth, the human and natural environment, and national security (the five strategic goals of the Department of Transportation). BTS's role in this goal is to provide data and information that others need to make decisions concerning transportation. We collect data and compile, analyze, and publish statistics. BTS is seeking assistance in building and developing this knowledge base.

While there are many excellent transportation data programs and many excellent statistics programs, few are devoted to the intersection of these two disciplines. Bringing a better understanding of statistics to transportation data will improve data quality, increase utility (e.g., by improving measures of travel), and reduce costs (e.g., by using techniques to make data collection, analysis, and dissemination more efficient). BTS wants to foster the transportation statistics discipline and increase its quality and usefulness to the transportation community. This grants program is one way BTS is working toward this goal.

II. Eligibility Requirements

What Organizations May Apply?

BTS invites applications from public and private non-profit entities. We strongly encourage Minority Serving Institutions, which have been traditionally under-represented in transportation statistics, to submit applications. If organizations partner on a project, the participants should submit a single application. You may submit more than one application as long as the applications are for separate and distinct projects.

What Projects Are Eligible for Funding?

Proposals should serve the broad transportation interests of the country, and we are particularly interested in high-quality proposals that treat one or more of the following areas:

(1) Measuring the vulnerability of the transportation system and its users to crime and terrorism;

(2) Visualizing and mining of transportation databases;

(3) Aggregating and analyzing databases maintained by DOT agencies, especially where the research involves multiple modes of transportation;

(4) Improving the quality and usability of federal transportation statistics;

(5) Designing and analyzing transportation surveys;

(6) Developing exposure measures (e.g., vehicle miles traveled) for use in risk analyses;

(7) Improving the statistical use of geographic information systems to better understand and quantify travel behavior;

(8) Developing performance measures for the transportation system;

(9) Applying small area estimation techniques to transportation;

(10) Improving data quality and data collection; and

(11) Enhancing or extending the National Transportation Library to better express or incorporate statistical analyses.

This list is not exhaustive, and we are eager to consider any innovative proposal that supports the development of the field of transportation statistics or involves research and development in transportation statistics. In this cycle, we will give priority consideration to proposals for innovative research on the security of our transportation system.

What Are the Cost Sharing Requirements?

For awards of $100,000 or more, the recipient shall fund at least 50 percent of the project's costs. The nonfederal match must come from sources other than the project sponsor, and must be cash contributions rather than in-kind contributions. In reviewing all applications, even those requesting less than $100,000, the degree of cost-sharing will be considered, with more weight given to cash contributions than in-kind services.

III. Application Contents

For more information about submitting your application, please refer to the **ADDRESSES** and **DATES** sections listed above. In order to be considered for funding under this program, your

application package must include the following:

(1) A Project Narrative. This must not exceed eight letter-size pages, single-sided and double-spaced. Use at least 12-point type and one inch margins. In general, the information you provide should be in sufficient detail so BTS understands the proposed work and its anticipated benefits. It should also demonstrate that you have the necessary experience and resources to accomplish it. The narrative must identify the organization; how it meets the eligibility criteria; its experience and accomplishments in collecting, analyzing, and/or disseminating transportation data; and the qualifications of the principals proposed to conduct the activities. The narrative must also describe the proposed activity, including how you would accomplish it, a timeline listing major milestones associated with the project, and a list of specific products and/or services with the dates they will be delivered.

(2) An Application for Federal Assistance. Submit OMB SF–424 (Application for Federal Assistance), which is the official form required for all federal grants. It requests basic information about the grantee and the proposed project. Under Part 10 of this form, use 20.920 and Transportation Statistics Research Grants for the Catalog of Federal Domestic Assistance Number and Title. Also submit OMB SF–424A (Budget Information—Nonconstruction Programs). You can download these forms from the OMB Internet site at *http://www.whitehouse.gov/omb/grants.*

(3) An Evaluation Plan. Include a brief description of how you will evaluate and measure the success of the project, including the anticipated benefits and challenges in completing it. This can be part of the Project Narrative.

(4) Resumes. Include resumes from up to three key personnel who would be significantly involved in the project.

(5) Letters of Commitment. If your proposal includes the significant involvement of other eligible organizations, your application must include letters of commitment from them.

IV. Application Review Process and Selection Criteria

The Transportation Statistics Research Grants program uses a competitive process and applications will be evaluated based on the merit and relevance of the proposed project in relation to the other applications received. BTS anticipates making multiple awards based on this solicitation. While BTS will select the most meritorious proposals, we may choose to not award all available funds.

Upon receiving an application, BTS will conduct an initial review to determine if it meets the eligibility criteria and contains all of the items specified under the Application Contents section of this announcement. A BTS evaluation committee will then review each complete application from an eligible recipient using the evaluation criteria listed below (the order of criteria does not designate priority) and the BTS Director will select the final grants. The evaluation criteria are:

(1) How well does the proposal support BTS's strategic goals of improving the quality, comparability, completeness, timeliness, relevance, and utility of transportation data? How well does the proposal serve the broad transportation interests of the United States?

(2) How innovative is the proposed activity? To what extent is the work being accomplished elsewhere?

(3) How much experience has the applicant demonstrated in one or more of the following areas—collecting, analyzing, storing, or disseminating transportation data, particularly data collected or disseminated by BTS, and working with theoretical statistical issues concerning transportation data?

(4) Does the applicant have the professional qualifications and team members necessary for satisfactory performance of the proposed activity?

(5) How well does the technical approach and proposed costs reflect an understanding of the procedures necessary to complete the required tasks?

(6) To what degree does the proposal include cost-sharing? More weight will be given to proposals with cash contributions than in-kind services. For awards of $100,000 or more, BTS requires cash contributions of 50 percent toward the total project's cost.

V. Amount of Funds Available and Period of Support

We anticipate that approximately $500,000 per year will be designated to support grants over the next five years, subject to the availability of appropriated funds. This estimate does not bind BTS to a specific number of offers or awards, nor to a specific amount of funding support for particular awards or awards in aggregate. It is anticipated that individual award amounts, based upon demonstrated needs, will likely range from $50,000 to $200,000, though BTS has not established minimum or maximum funding levels.

Given the amount of funds available, applicants are strongly encouraged to seek other funding opportunities to supplement the federal funds. Preference will be given to applicants with cost sharing proposals from within or outside their organizations.

The period of time of awards will vary with the complexity of the project and it is possible that grants will be awarded for periods greater than one year.

VI. BTS Involvement

BTS involvement, if any, will vary by award. If you anticipate BTS involvement, you must note this in your project narrative and any support BTS provides will be specified in the award agreement. BTS will assign a liaison to serve as the primary contact regarding the grant.

VII. Terms and Conditions of Award

(1) Prior to award, each grantee will be required to complete additional government application forms, such as OMB SF–424B (Assurances—Nonconstruction Programs) and with the certification requirements of 49 CFR Part 20, Department of Transportation New Restrictions on Lobbying, and 49 CFR Part 29, Department of Transportation Government-Wide Debarment and Suspension (Non-Procurement) and Government-Wide Requirements for Drug Free Workplace (Grants).

(2) Each grantee shall submit a program implementation plan no more than one month after award. The BTS liaison will review and comment, if necessary.

(3) Each grantee shall submit quarterly progress reports, a draft final report, and a final report that reflects the BTS liaison's comments.

Thank you for your interest in our Transportation Statistics Research Grants program.

Ashish Sen,

Director.

[FR Doc. 02–16181 Filed 6–26–02; 8:45 am]

BILLING CODE 4910–HY–P

DEPARTMENT OF VETERANS AFFAIRS

[OMB Control No. 2900–0545]

Agency Information Collection Activities Under OMB Review

AGENCY: Veterans Benefits Administration, Department of Veterans Affairs.

ACTION: Notice.

SUMMARY: In compliance with the Paperwork Reduction Act (PRA) of 1995 (44 U.S.C., 3501 *et seq.*), this notice announces that the Veterans Benefits Administration (VBA), Department of Veterans Affairs, has submitted the collection of information abstracted below to the Office of Management and Budget (OMB) for review and comment. The PRA submission describes the nature of the information collection and its expected cost and burden; it includes the actual data collection instrument.

DATES: Comments must be submitted on or before July 29, 2002.

FOR FURTHER INFORMATION OR A COPY OF THE SUBMISSION CONTACT: Denise McLamb, Information Management Service (045A4), Department of Veterans Affairs, 810 Vermont Avenue, NW., Washington, DC 20420, (202) 273–8030, FAX (202) 273–5981 or e-mail: *denise.mclamb@mail.va.gov.* Please refer to ''OMB Control No. 2900–0545.''

Send comments and recommendations concerning any aspect of the information collection to VA's OMB Desk Officer, OMB Human Resources and Housing Branch, New Executive Office Building, Room 10235, Washington, DC 20503 (202) 395–7316. Please refer to ''OMB Control No. 2900–0545'' in any correspondence.

SUPPLEMENTARY INFORMATION:

Title: Report of Medical, Legal, and Other Expenses Incident to Recovery for Injury or Death, VA Form 21–8416b.

OMB Control Number: 2900–0545.

Type of Review: Extension of a currently approved collection.

Abstract: The data collected is used to report expenses incident to recovery of benefits for injury or death.

An agency may not conduct or sponsor, and a person is not required to respond to a collection of information unless it displays a currently valid OMB control number. The **Federal Register** Notice with a 60-day comment period soliciting comments on this collection of information was published on April 15, 2002, at page 18306.

Affected Public: Individuals or households.

Estimated Annual Burden: 7,500 hours.

Estimated Average Burden Per Respondent: 45 minutes.

Frequency of Response: On occasion.

Estimated Number of Respondents: 10,000.

Dated: June 18, 2002.

By direction of the Secretary:

Genie McCully,

Acting Director, Information Management Service.

[FR Doc. 02–16288 Filed 6–26–02; 8:45 am]

BILLING CODE 8010–01–P

Corrections

Federal Register

Vol. 67, No. 124

Thursday, June 27, 2002

This section of the FEDERAL REGISTER contains editorial corrections of previously published Presidential, Rule, Proposed Rule, and Notice documents. These corrections are prepared by the Office of the Federal Register. Agency prepared corrections are issued as signed documents and appear in the appropriate document categories elsewhere in the issue.

DEPARTMENT OF EDUCATION

Federal Pell Grant, Federal Perkins Loans, Federal Work-Study, Federal Supplemental Educational Opportunity Grant, Federal Family Education Loan, and William D. Ford Federal Direct Loan Programs

Correction

In notice document 02–13704 beginning on page 38079 in the issue of Friday, May 31, 2002, make the following correction:

On page 38080, in the table at the top of the page, under the heading Number in College--, in the third column, in the fourth line, ''23,900 '' should read ''23,990 ''.

[FR Doc. C2–13704 Filed 6–26–02; 8:45 am]

BILLING CODE 1505–01–D

Federal Register

Thursday,
June 27, 2002

Part II

National Gaming Commission

25 CFR Part 542

Minimum Internal Control Standards; Final Rule

NATIONAL INDIAN GAMING COMMISSION

25 CFR Part 542

RIN 3141–AA24

Minimum Internal Control Standards

AGENCY: National Indian Gaming Commission.

ACTION: Final rule.

SUMMARY: In response to the inherent risks and the need for effective controls in tribal gaming operations, the Commission, in 1999, developed Minimum Internal Control Standards (MICS). Since their original implementation, it has become obvious that the MICS require technical adjustments and revisions so that they may continue to be effective in protecting tribal assets, while allowing Tribes to utilize technological advances in the gaming industry. To that end, this final rule contains numerous revisions to the Commission's existing MICS that provide clarification of the rules and the flexibility to allow tribal gaming operations to make use of technological advances.

DATES: *Effective Date:* July 29, 2002.

Compliance Date: Each Tribal gaming regulatory authority shall, in accordance with the Tribal gaming ordinance, establish and implement tribal internal control standards within six (6) months of June 27, 2002, that satisfy the requirements of § 542.3 herein. For those Tribes whose tribal internal control standards already satisfy the requirements of § 542.3, no action is necessary.

FOR FURTHER INFORMATION CONTACT: Joe H. Smith, 202–632–7003 or 503–326–7050.

SUPPLEMENTARY INFORMATION:

Background

On January 5, 1999, the Commission first published its Minimum Internal Control Standards (MICS) as a Final rule. Since this time, as gaming Tribes and the Commission gained practical experience with the MICS, it became apparent that some of the standards required clarification or modification to operate as the Commission had intended. Also recognizing the changes and advances in Indian gaming and gaming technology since implementation, on November 27, 2000, the Commission published an advanced notice of proposed rulemaking requesting public comments on the implementation of the MICS.

Along with requesting public comments, the Commission also solicited input and guidance from our own employees, many of whom work closely with Indian country to monitor compliance with the existing regulation. In addition to receiving input from our senior staff within the Washington, DC office, we also obtained input from staff working directly with Tribal gaming operations. This gathering of information culminated with a series of conference calls with our Regional Offices and auditing staff where we reviewed each provision of the regulation. Also reviewed were the numerous comments received in response to the advance notice of proposed rulemaking. Comments and suggestions received from our employees, emanating from actual, hands-on experience with the MICS, helped identify certain areas with which Commission employees had found difficulty. This input proved critical over the next several months as we worked to revise the regulation.

In keeping with its commitment to consultation and recognizing the government-to-government relationship it shares with Tribes, the Commission solicited nominations of individuals interested in serving on an Advisory Committee designed to assist in revising the MICS. Ten (10) tribal representatives were selected based on several factors, including the experiences and backgrounds of the individuals nominated, the size(s) of their gaming operation(s), the types of games played at their gaming operation(s), and the areas of the country their gaming operation(s) are located. The selection process was a difficult one as numerous highly qualified individuals expressed an interest in serving on this important Committee. As expected, the value added by involving tribal representatives who work daily with the MICS was immeasurable.

Those participating on the behalf of Tribes as members of this Advisory Committee were: Jamie Hummingbird, Director, Cherokee Nation Gaming Commission, Cherokee Nation; Patrick H. Lambert, Executive Director, Eastern Band of Cherokee Gaming Commission, Eastern Band of Cherokee; Stephen R. Lewis, Commissioner, Gila River Gaming Commission, Gila River Indian Community; Kristin L. Lumley, Executive Director, Yakama Nation Gaming Commission, Yakama Nation; John Monforte, Executive Director, Acoma Gaming Commission, Pueblo of Acoma; Kevin F. O'Toole, Executive Director, Oneida Nation Gaming Commission, Oneida Nation of New York; Sandra Plawman, Treasurer, Ho-Chunk Nation Gaming Commission, Ho-Chuck Nation; Jerome J. Schultze, Director, Morongo Gaming Agency, Morongo Band of Mission Indians; Lisa B. Whetzel, Director, Kaw Nation Enterprise Development Authority, Kaw Nation; and Saunie K. Wilson, Executive Secretary, Oglala Sioux Tribal Gaming Commission, Oglala Sioux. The Advisory Committee also included the following Commission representatives: Teresa E. Poust, Commissioner; Joe H. Smith, Acting Director of Audits; Michele F. Mitchell, Attorney; Timothy B. Russ, Financial Analyst; and Denise Desiderio, Assistant to the Commission. Also important to the success of this process was the involvement of a professional facilitator, Juliette A. Falkner, of Carr, Falkner & Swanson. Ms. Falkner was instrumental in keeping the Committee focused on our goals and realizing our optimistic timeframe for completion.

The tribal and federal representatives on the Advisory Committee worked together as a team, guided by a Partnership Agreement developed at its first meeting. An important component of this Partnership Agreement was that decision-making would be done by consensus. Without concurrence from all Committee members on a proposed change, none would be made. While a particular change may not be representative of an individual's first preference, it was something found to be within acceptable limits. As such, this rule represents a series of compromises made by all members of the Advisory Committee after much discussion.

The Commission worked closely with the Advisory Committee to address their concerns about the existing MICS and to address the nearly one hundred comments received in response to the advanced notice of proposed rulemaking. Between May and November 2001, the Commission sponsored six working meetings. During these meetings, every clause of the existing MICS was reviewed and every comment submitted to the Commission was considered. Each meeting was held in a different region of the country, enabling visits to a number of tribal gaming operations. These visits provided valuable, first-hand experience with technological advances and concerns expressed during the comment period. Changes were made to the existing MICS based on comments, input from Advisory Committee members, and data gathered during site visits. At the conclusion of this process, the Commission published the Proposed Rule in the **Federal Register** on December 26, 2001.

On February 5, 2002, the Commission hosted a public hearing on the Proposed Rule. This hearing provided an

excellent opportunity for individuals to provide comment about the regulation to both the Commission and to members of the Advisory Committee. A total of twenty (20) individuals presented testimony at this hearing.

The Commission received approximately ninety (90) comments in response to publication of the Proposed Rule. During the final meeting of the Advisory Committee, held in April 2002, each comment was reviewed and utilized to draft a Final Rule. The full Commission then approved this Final Rule.

General Comments

Authority

More than half of the commenters, as well as members of the Advisory Committee, question the Commission's authority to promulgate this rule, particularly as it pertains to class III gaming. Members of the Advisory Committee agreed to participate in the process of revising the MICS, despite their position that the Commission may be without authority to promulgate minimum internal controls for class III gaming. The Commission acknowledges that the participation of tribal representatives in this process does not in any way indicate concurrence in the Commission's determination that it does have the statutory authority to establish and enforce these regulations.

Internal controls are the primary procedures used to protect the integrity of casino funds and games, and are a vitally important part of properly regulated gaming. Inherent in gaming operations are problems of customer and employee access to cash, unrecorded cash transactions at table games, questions of the fairness of games, and the threat of collusion to circumvent controls. Internal control standards are therefore commonplace in the gaming industry and the Commission recognizes that many Tribes had sophisticated internal control standards in place prior to the Commission's original promulgation of the MICS.

For the Commission to appropriately fulfill it responsibilities under the Indian Gaming Regulatory Act (IGRA), it follows that there must exist some rules for the handling of cash and the tracking of transactions that occur with great frequency in a gaming operation. These MICS are designed to establish baseline, or *minimum* standards, required of Indian gaming operations. There is no doubt that the MICS provide the Commission with a significant tool for achieving the stated purposes of IGRA. The Commission firmly believes that minimum internal control standards are necessary, and that the promulgation of these standards is a permissible exercise of its statutory authority to promulgate such regulations and guidelines as it deems appropriate to implement the provisions of IGRA.

The lengthy discussion amongst members of the Advisory Committee regarding authority also included a discussion as to whether the MICS should be promulgated as recommended guidelines versus a mandatory rule. Several commenters also made this proposal. The Commission continues to believe that the MICS should be issued as a rule.

MICS Structure

During both comment periods, several suggested that the Commission develop separate MICS for class II and class III gaming. Along these lines, several Advisory Committee members submitted proposals structuring the MICS so that the document itself was divided into class II and class III MICS. During consideration, a second alternative was discussed: that is, separating the MICS based upon tiers. A common complaint of tier A and B operations is that the existing MICS are confusing as to which requirements apply and which do not.

As with the original rule, this rule is not designed to classify games into class II or class III. Rather, the MICS address the control issues related to the particular game. Pull tabs, for example, can be played as a class II or a class III game depending on the nature and circumstances of their play. Section 542.8 pertaining to pull tabs applies regardless of whether they are being played as class II or class III gaming.

After extensive discussion, the Committee reached consensus on dividing the MICS along tier lines rather than game classification, recognizing that the requirements placed upon tribal gaming operations should differ based upon their annual gross gaming revenue. A number of commenters on the proposed rule indicated that they found this new structure helpful.

This final rule is organized essentially in two parts. Sections 542.1 through 542.18 contain both general provisions and standards relating to particular categories of games. Beginning with § 542.20, the rule is then divided based upon tier. Sections 542.20 through 542.23 apply only to Tier A gaming operations; §§ 542.30 through 542.33 apply only to Tier B operations; and §§ 542.40 through 542.43 apply only to Tier C operations. The Commission continues to believe that this structure provides the clearest guidance to Tribes of their obligations under the MICS.

The Commission recognizes that some Tribes may find it beneficial to have separate internal control standards for class II and class III games. The most effective method of tailoring these MICS for class II and/or class III operations is in the development of tribal internal control standards as discussed below.

Tribal Internal Control Standards

Indian gaming is and always will be very diverse. The Commission therefore recognizes that developing one set of MICS to address all situations in every tribal gaming operation is not possible. It is not intended for Tribes to simply adopt these MICS verbatim as tribal internal control standards. Instead, Tribal gaming regulatory authorities should utilize the following to develop their own internal control standards as provided for in § 542.3(c) of this part.

For example, a number of commenters suggested removing § 542.15 (establishing minimum internal control standards for credit) from the MICS because their operation does not extend credit, or because they are prohibited from doing so by their Tribal-State compact. Similarly, many operations do not participate in pari-mutuel wagering, or offer roulette. The Commission realizes that gaming operations do not play all games or utilize all procedures contained herein, and it is for this reason that we do not call for wholesale adoption of these MICS.

If an operation does not utilize credit, these provisions of the MICS do not have to be included in the tribal internal control standards. If craps, roulette, or poker, are not offered, standards regarding these games do not have to be included in the tribal internal control standards. If the Tribal gaming regulatory authority prefers having separate internal controls for class II and class III games, the tribal internal control standards can be written in this fashion. Tribal internal control standards should be developed in a manner that addresses the particular needs and desires of the Tribe. Doing so allows tailoring of the MICS to meet the individual needs of a diverse industry.

It is also within the tribal internal control standards that the Tribal gaming regulatory authority can elect to develop standards that are more stringent than those contained herein. Many commenters made recommendations that would increase the minimum standards set by this regulation. Although the Commission appreciates and commends the desire of some to increase the stringency of these standards, these MICS are considered

minimums; the base upon which tribal regulators should build their regulatory structure. It was the Commission's determination that some of the suggestions exceeded the minimum standards appropriate for all gaming operations, and they therefore were not incorporated.

Tribal Gaming Regulatory Authority

One of the terms used throughout the rule is ''Tribal gaming regulatory authority.'' Tribes are responsible for the primary, day-to-day regulation of their operations, and the Commission recognizes that tribal governments have chosen different approaches of exercising their regulatory authority. A vast majority of Tribes have implemented independent tribal gaming commissions, which in most cases the Commission believes to be the most effective way of ensuring the proper regulation of gaming operations. Alternate regulatory structures have also been developed, such as utilizing existing tribal governments, business, or economic development agencies, when determined to be more appropriate to the needs of the Tribe. The term ''Tribal gaming regulatory authority'' is intended to refer to the tribally designated entity responsible for gaming regulation.

In order to clarify the role of Tribal gaming regulatory authorities and recognize their immense value, the requirement that the Tribal gaming regulatory authority approve procedures, in a manner as determined by the Tribe, before being implemented by the gaming operation has been added where appropriate. While the MICS require prior approval, it is important to note that they do not specify the manner in which the Tribal gaming regulatory authority should carry out this approval. The type of approval process implemented is a decision to be made by the Tribe. Some may desire issuance of an approval letter, while some may stipulate that failure to object within a specified period of time signifies approval. Others may wish to prescribe varying degrees of approval based upon the significance of the individual procedure. Regardless, this flexibility further enables the Tribe to tailor the MICS to their particular needs.

Overall, commenters commend the fact that revisions to the MICS specifically acknowledge that Tribes are responsible for the primary regulation of their gaming operation.

Accounting Standards

Information was presented to the Commission regarding the addition of accounting standards to the MICS. Data was reviewed from multiple gaming jurisdictions indicating that such standards are a typical element of a gaming regulatory framework. After much consideration, it was the Committee's consensus that promulgation of accounting standards should be reserved for the Tribal gaming regulatory authority. Furthermore, it was recommended that the Commission provide guidance to the Tribes in the development of the standards and that such guidance be in the form of a bulletin.

Technological Advances in Gaming

One of the most widely mentioned issues was that of technological advances. Many commenters felt that the existing MICS did not adequately address those areas in which new computer technology provides a level of control that equals or exceeds the standards set forth in this part. The Commission and the Committee have attempted to address this issue in two ways. First, where appropriate, specific sections of the MICS were modified to accommodate technological advances. Second, language was added to each section increasing flexibility by allowing use of computer applications that provide at least the level of control described by the standards in that section. Such usage would have to first be approved by the Tribal gaming regulatory authority. A variance would not be necessary, so long as the level of control required by the MICS is maintained and conflict with another standard is not created.

Investigation Results

In several instances throughout the MICS, the gaming operation is required to conduct investigations of statistical fluctuations. Several commenters suggested requiring that the results of these investigations be brought to the attention of the Tribal gaming regulatory authority. The Commission agrees and has added appropriate language.

Grandfathering

One commenter asked that their operation be ''grandfathered,'' and not be required to comply with this final rule. The Commission believes that in most instances, the standards included in the revised MICS have not been increased. Any gaming operation in compliance with the existing MICS should, in most respects, be in compliance with this final rule. Further, the Commission has increased the time for gaming operations to come into compliance with any new tribal internal control standards developed in response to this final rule. Therefore, grandfathering was not incorporated.

Language Clarification

Several commenters suggested language and grammatical changes to clarify certain provisions of these standards. The Commission agrees with many of these recommendations and appropriate changes have been made.

Improvement to Existing MICS

A number of commenters stated that the proposed rule was a great improvement over the existing MICS and commended the Committee for its work. Commenters indicated that both the structure and content was more understandable and better organized.

Section 542.2 Definitions

Many commenters suggested changes to the definitions section of the MICS. Changes were made in response to these comments to clarify the meaning of a number of terms used. Definitions for ''Tribal gaming regulatory authority'' and ''weigh scale calibration module'' were added to the standard. The definitions for ''bank or bankroll,'' ''document acceptor,'' and ''gaming machine fill'' have been deleted.

Two commenters requested a change to ''sufficient clarity.'' Industry standards were examined in developing the definition used in the proposed rule and this definition is believed to be appropriate. The Commission disagrees with the need for any change.

In some instances, commenters requested that definitions be developed for terms that are not used in the body of the MICS. The Commission decided that this may create confusion and chose not to add definitions of terms not used in the body of the MICS.

Section 542.3 Compliance

One commenter asked whether the determination of tier level discussed in § 542.3(b) would be made based on the collective annual gross gaming revenues of all gaming operations operated by a Tribe (for those Tribes operating more than one gaming operation). This is not the intent of the Commission. Rather, the determination of tier level will be made on a per operation basis. In other words, if a Tribe operates two separate gaming operations, one with annual gross gaming revenues of $4 million, and the other with gross gaming revenues of $14 million, the $4 million operation would be treated as a Tier A operation, and the $14 million operation would be treated as a Tier B operation. The two would *not* be combined to require compliance with Tier C standards.

Several commenters requested that the time limits contained within § 542.3(c) be extended. The Commission agrees in part and extends the deadline contained within § 542.3(c)(4) to nine (9) months by which a gaming operation must come into compliance with the tribal internal control standards.

Modification was also made to the ability of the Tribal gaming regulatory authority to extend this nine (9) month period by an additional six (6) months. Rather than requiring that a Tribal gaming regulatory authority request permission from the Commission to extend this time frame, the Tribal gaming regulatory authority now need only notify the Commission of its decision to extend the deadline.

One commenter suggested that the language used in § 542.3(c)(1) requiring standards adopted by Tribal gaming regulatory authorities be ''at least as stringent as those set forth in this part,'' should be changed to ''provide a level of control that equals or exceeds those set forth in this part.'' The Commission agrees that this language more clearly states the objective of the MICS as minimum standards.

Within § 542.3(c)(2), several commenters requested that the Commission develop and adopt standards that provide additional guidance for currency transaction reporting under 31 CFR part 103. While the Commission recognizes the importance of standards for currency transaction reporting, it does not believe it is the proper source of such guidance. Instead, gaming operations and Tribal gaming regulatory authorities should consult directly with the Internal Revenue Service to obtain assistance with 31 CFR part 103.

Regarding the requirement of § 542.3(f) that a certified public accountant (CPA) perform independent testing of the tribal internal control standards, several commenters suggested that, to save expense, the CPA should only perform testing of compliance with the Commission MICS. Both the Commission and the Committee agree that testing only against the Commission MICS would not be useful to those Tribes who have adopted tribal internal control standards tailored to meet the needs of their operation, particularly where certain standards have been made more stringent. As the primary regulator of their gaming operation, Tribal gaming regulatory authorities are equally, if not more, concerned with compliance with tribal internal control standards.

Several commenters asked that auditing standards be included in the MICS. The Commission believes that generally accepted auditing standards should be utilized, and therefore do not need to be included in the MICS. CPA guidelines continue to be available by request from the Commission.

Several commenters suggested adding language that tribal administrative remedies should be exhausted prior to any enforcement action being taken by the Commission. It is not the Commission's practice to take enforcement action without first informing the Tribe and Tribal gaming regulatory authority of deficiencies and allowing a reasonable period of time for resolution. Unless the deficiencies create an immediate and severe threat to the integrity of the gaming operation, the Commission will work with the Tribe and Tribal gaming regulatory authority to remedy the deficiencies. It is only after failure to address noted deficiencies within a reasonable period of time that the Commission would contemplate enforcement action. In response to these comments, the Commission has added language at § 542.3(g) recognizing this practice.

Section 542.4 Tribal-State Compacts

Commenters and members of the Committee requested clarification on the effect of the MICS on internal control standards contained within a Tribal-State compact. Advisory Committee members put forth wording that would require standards within a Tribal-State compact to take priority over these MICS. The Commission does not fully support this approach because some compacts do not contain internal control standards, or contain only limited standards insufficient alone to adequately protect the integrity of Indian gaming.

A number of Tribal-State compacts, however, do contain detailed internal control standards. In recognition, § 542.4 has been restructured to provide deference to internal control standards within a Tribal-State compact where they provide ''a level of control that equals or exceeds the level of control under an internal control standard or requirement set forth in this part.'' The Commission believes this language provides appropriate deference to Tribal-State compacts containing detailed internal control standards, while also addressing those situations where compacts contain more limited standards.

Section 542.7 Bingo

Several commenters asked for clarification of the term ''independent person'' as used in § 542.7(b)(5). It is intended that a person independent of the bingo caller responsible for calling the speed bingo game verify the ball drawn. It is not necessary that this person is an employee, and in fact, some small operations use a customer for this purpose. This would meet the level of control required by the standard. Modification has been made to more clearly state the intent of this standard. It is worth noting, however, that § 542.7(b)(9), requiring ''personnel independent of the transaction'' to approve payouts in excess of $1,200, does require utilization of an employee of the gaming operation.

One commenter suggested that only promotional payouts or awards exceeding a fair-market value of over $100.00 be recorded. The Commission believes that, for purposes of accountability and reconciliation, all such payouts should be recorded, regardless of dollar value. Therefore, no changes were made to § 542.7(c).

One commenter suggested adding the requirement that a ''blind count'' be performed under § 542.7(d)(2). Another suggested that two signatures be required by § 542.7(c)(1)(iv) to authorize promotional payouts with a high dollar value. While the Commission decided not to require these higher standards of all gaming operations, the Commission continues to encourage implementation of higher standards of control where desired.

One commenter suggested that a department independent of the bingo department should be responsible for the securing and inventorying of bingo paper, as required by § 542.7(e)(4). The Commission agrees with another commenter that this would place an undue burden on small gaming operations. It is sufficient that personnel independent of bingo sales be assigned this function.

Section 542.8 Pull Tabs

As in bingo, several commenters suggested adding the requirement that an independent department be required to verify the accuracy of the ending pull tab balance, as required by § 542.8(b)(5). This increased level of control is encouraged but not required by these standards, as it would place an undue burden on small gaming operations. In response to another commenter, this section was clarified by stating that ''a person or persons independent of the pull tab sales and inventory control'' shall be assigned this responsibility.

The Commission agrees with a commenter that weighing pull tabs is an acceptable alternative to the counting of pull tabs specified in § 542.8(b)(5). Accordingly, the word ''counting'' was changed to the broader term ''reconciling.''

Section 542.9 Card Games

Several commenters suggested allowing the use of fill and credit slips in lieu of lammers for the transfer of cash equivalents between card tables and the bank as discussed in § 542.9(c)(2). The Commission did not adopt this change given that the fill and credit process for execution of transfers between tables and the card room bank represents a process exceedingly more cumbersome than that stipulated in the MICS. The use of the fill and credit process in this instance does however represent an acceptable alternative procedure.

One commenter asked whether § 542.9(d)(2) requires the Tribal gaming regulatory authority to physically mark or destroy playing cards. It does not. Instead, the Tribal gaming regulatory authority must approve the *process* of marking or destroying the cards. In fact, industry practice indicates that security personnel typically perform this function.

In reference to §§ 542.9(d) and (e), one commenter suggested that requiring the washing of plastic cards every seventy-two (72) hours of use makes no sense if non-plastic cards can be used for up to seven (7) days with no action. Typically, most operations use non-plastic playing cards for no more than twenty-four (24) hours, and this was presumed in developing these standards. Another commenter suggested adding language requiring cancellation of plastic cards showing wear. After consideration, the Commission agrees that it would provide better protection for the MICS to require routine inspection of plastic playing cards and allow the Tribal gaming regulatory authority to determine how often they should be washed.

Several commenters suggested that the standards for promotional progressive pots and pools at § 542.9(h) be changed to allow for the collection of a commission or administrative fee. The Commission disagrees and believes that funds contributed by the playing public to these pools should be returned to the public. It is worth noting, however, that there is nothing in the standard limiting the amount collected as a house rake, as long as players are made aware of the amount collected from each pot.

One commenter suggested adding key controls for duplicate keys to §§ 542.9(i) and (j). Such an addition is unnecessary as key control standards apply to all keys whether duplicate or original.

Section 542.10 Keno

One commenter requested clarification to the language at § 542.10(c)(1)(vi) regarding the inspection of keno balls in use. The commenter indicated that some have interpreted the standard to require inspection of keno balls while inside the drawing equipment. The standard, as currently written, does not require such inspection. Customarily, keno balls are removed from the keno equipment at the end of each session and transported to a secure location. Standard practice is for keno balls to be inspected once during each session of keno, generally as the balls are being reinserted into the keno equipment prior to the commencement of play.

One commenter suggested that the personnel access listing at § 542.10(j)(3)(vi) should require either an employee name or an identifying number. The Commission agrees and made this change.

One commenter suggested removing § 542.10(p) regarding manual keno. The Commission maintained this standard because it believes some gaming operations continue to offer manual keno.

Section 542.11 Pari-Mutuel Wagering

Commenters indicated that this section is largely improved from the existing MICS. Several commenters requested an additional exemption from the MICS for those operations that utilize an independent simulcast provider that is not a state-regulated racetrack. The Commission believes that the information required by the MICS, which must be obtained from the provider, is essential to the ability of the gaming operation to be able to determine whether it is receiving its guaranteed share of the handle. Thus, no additional exemption was added.

Several commenters also suggested fully exempting pari-mutuel wagering conducted pursuant to a Tribal-State compact, where the Tribe is responsible for security and other ancillary services, but not for the receipt, payment, and custody of all funds of the operation. The Commission believes that the exemption contained in § 542.11(a) would include those Tribes operating under such an agreement pursuant to their compact.

One commenter suggested removing the requirement at § 542.11(h)(9) that the gaming operation verify purged ticket information. The Commission believes that this information is necessary to verify that the purging of unpaid tickets is appropriate and is not being performed in an arbitrary manner that could impact winning patrons of the gaming operation. Likewise, reviewing purged ticket data is important to the participating locations since they affect the calculation of funds to and/or from the service provider.

One commenter suggested removing the ''on a weekly basis'' designation for the audit testing required at § 524.11(h)(3). The Commission disagrees. Weekly review of the information provided by the operator is necessary to ensure that the Tribe is receiving its contractually agreed upon percentage of the handle.

Section 542.12 Table Games

One commenter suggested that standards be included for debit card transactions at gaming tables. The Commission believes that, should a gaming operation choose to utilize this technology, the Tribal gaming regulatory authority would be responsible for developing controlling standards.

Several commenters suggested removing references to credit in this section. As discussed earlier, the Commission realizes that there are certain standards contained within the MICS that do not apply to all gaming operations. Gaming operations that do not utilize credit are not required to adopt standards specifically relating to credit.

Several commenters stated that reference to the standards for drop and count of table games found at § 542.12(b) should be worded the same as the reference to drop and count for gaming machines. The Commission agrees and has made this change.

One commenter stated that the requirement at § 542.12(c)(4) that the pit supervisor authorize a credit or fill was too stringent. The Commission agrees that intermediary gaming supervisors could authorize credits or fills and has changed the language to ''pit supervisory personnel'' to clarify this point.

Several commenters stated that the process of obtaining signatures on the copies of credit and fill slips was unclear. Section 542.12(c)(13) was reworded to clarify the signature progression required for these transactions. In addition, the standard was changed to allow a boxperson to sign for chip transactions at craps tables.

While some commented favorably about no longer requiring the counting of table banks of table games that were not opened during a shift, others suggested that § 542.12(d) should continue to require that table banks be counted, whether opened or not. The Commission believes the new standard allows for flexibility, particularly for small gaming operations. If a Tribal gaming regulatory authority believes that all tables should be counted regardless of whether they were opened,

they can include this higher standard in their tribal internal control standards.

Commenters stated that the requirement to ''mark and remove cards and dice from play'' places an unnecessary burden on the Tribal gaming regulatory authority. The language in § 542.12(f) was clarified to indicate that, as long as used cards and dice are secured, it is not necessary to mark them *immediately* after removal from play. It is also worth noting that this standard does not specify which entity is responsible for the task, only that the Tribal gaming regulatory authority, or the gaming operation as approved by the Tribal gaming regulatory authority, establish a time frame (not to exceed seven (7) days) for the marking, canceling, or destruction of cards and dice.

One commenter felt that the daily recap requirement of § 542.12(i)(6) as it relates to pit credit was originally modeled after the Nevada MICS, and only important for the purpose of determining monthly taxes paid to the state. The Commission agrees that these requirements serve little if any value in Indian country and they therefore have been deleted.

One commenter suggested allowing non-supervisory personnel to sign customer markers in § 542.12(j)(1). The Commission disagrees, but has changed the term to ''pit supervisory personnel'' rather than ''pit supervisor'' to clarify that supervisors other than the pit supervisor may also perform this function.

Two commenters suggested prohibiting rim credit, indicating either that it is not used in tribal gaming operations, or that it may lead to collusion between a player and a dealer. While the Commission tends to agree, it believes that the Tribal gaming regulatory authority should determine the suitability of rim credit. Tribal gaming regulatory authorities not wishing to permit rim credit can make this determination in their tribal internal control standards.

Section 542.13 Gaming Machines

Several commenters discussed on-line accounting systems. Several were concerned that the MICS require such a system. Others felt that an on-line accounting system should be required. While the Commission encourages the use of an on-line accounting system, such system is not required for coin drop devices.

A number of comments were received on § 542.13(d), resulting in changes to both the content and structure of the section. Several asked that the documentation requirements of § 542.13(d)(1) be reduced. The Commission finds the documentation requirements for single jackpot payouts to be appropriate due to IRS requirements that single jackpots in excess of $1,199.99 be documented.

Section 542.13(d)(1)(vi)(B) permits jackpot payouts of less than $1,200 with the signature of only one employee if an on-line accounting system is utilized. Several commenters stated that hopper fills should be treated similarly. The Commission agrees that the risks associated with hopper fills is greatly reduced when an on-line accounting system is in use that confirms the fill transaction, and has therefore modified this section to include hopper fills.

Many commenters mentioned the positive attributes of on-line accounting systems. Recognizing their ability to provide adequate protection for many transactions, several changes were made, including for example, the reduction in signature requirements in § 542.13(d)(2) for short-pays and accumulated credit payouts of less than $3,000.

Several commenters stated that they believe multi-denominational machines are not covered by the MICS. While it is true that the MICS are silent with regard to specific mention of multi-denominational machines, it is not necessary that each type of machine be specifically addressed in order to be included within the MICS. Multi-denominational machines are subject to the MICS as they are applicable to gaming machines.

One commenter suggested eliminating the requirement at § 542.13(h)(10) that in-meter reading data be retained for 5 years because it is excessive. The Commission agrees and has made this change.

One commenter suggested that the investigation of large variances between theoretical and actual hold required by § 542.13(h)(19), should be performed by a department independent of the gaming machine department and that the results of the investigation should be provided to the Tribal gaming regulatory authority. The Commission agrees with this recommendation and the language has been changed accordingly. Furthermore, because the Tribal gaming regulatory authority bears the primary regulatory responsibility, language regarding the sharing of investigative findings with the Tribal gaming regulatory authority has been added throughout the MICS.

At § 542.13(i), the Commission proposed consolidating hopper contents standards when gaming machines are either temporarily or permanently removed from the gaming floor. One commenter felt that requiring the counting of the gaming machine drop and hopper contents when machines were temporarily removed from the floor was of little value, and suggested reverting to the existing language. The Commission agrees and the language was modified accordingly.

Commenters disagreed about whether booth employees should handle lost player club cards. Some felt that they should be able to return lost cards to players, while others felt that booth employees should under no circumstances have access to lost player cards. The Commission believes that the language at § 542.13(j)(iii), which allows booth employees to receive lost player club cards, provided that they are immediately deposited into a secured container to which they do not have access, is an acceptable minimum level of control. At least one commenter saw this language as an appropriate compromise.

Several commenters suggested that the thresholds contained in §§ 542.13(m)(5) and (7), whereby investigation of coin and currency drop variances is necessary, were inappropriate. The Commission feels these amounts are a reasonable reflection of industry standards. Again, for those commenters that believe these amounts should be lower, it is suggested that this be done in the development of tribal internal control standards.

Section 542.13(n)(3) discusses the redemption of cash-out tickets. Remote validation systems are a technological advance providing a reasonable level of control. The proposed rule recognized this new technology, but limited its use to tickets not exceeding $1,199. Based on comments and relevant research, the $1,199 limitation was increased to $2,999 per cash-out transaction.

The language throughout § 542.13(n) referring to a ''cashier'' has been clarified to include a ''redeemer'' to reflect use of a remote validation system. It is worth mentioning that in the event the system goes down, cash-out tickets must be redeemed at a change booth or cashier's cage in accordance with § 542.13(n)(8) to ensure adequate surveillance to protect the integrity of the transaction.

Two commenters opposed the prohibition by § 542.13(p) of smart cards. With smart cards, there is no duplicate record of the information stored on the card, placing both the customer and the operation at risk. If, in the future, technology is developed that would alleviate these concerns, a gaming operation wishing to utilize the system may request a variance from the Commission.

Section 542.14 Cage

One commenter asked whether the check cashing standards of § 542.14 apply to independent check cashing companies. They do not. However, the Commission strongly recommends that the Tribal gaming regulatory authority adopt regulations that will ensure persons employed by such companies are suitable to work in the gaming industry. Likewise, the Commission recommends that the Tribal gaming regulatory authority install surveillance cameras over appropriate counter areas to ensure that the interests of its customers are adequately protected. It is also important for the tribal regulators to require that the service provider has adopted necessary internal controls to ensure compliance with Title 31.

One commenter stated that the Tribal gaming regulatory authority, rather than the Commission, should determine the adequate minimum bankroll. The Commission agrees. The bankroll is the amount of cash or cash equivalents kept on hand to ensure that the gaming operation can satisfy its obligations to customers. Industry practice is for the gaming operation to determine the required bankroll. Section 542.14(d)(4) requires only that the Tribal gaming regulatory authority approve the formula utilized for this determination. The bankroll formula available from the Commission is merely recommended guidance issued in response to repeated requests from gaming operations.

One commenter asked whether chips, because they are a component of cage accountability, should be included in the bankroll formula. Chips, while they must be accounted for in the cage, are not cash equivalents for the purpose of paying customers.

Section 542.15 Credit

A number of commenters suggest removing this section from the MICS because they do not extend credit, or because they are prohibited from doing so by their Tribal-State compact. The Commission recognizes that not all gaming operations play all games or utilize all procedures contained herein. Again, this is where the process of developing tribal internal control standards becomes important. It is not intended for Tribes to simply adopt these MICS verbatim as tribal standards. Instead, Tribes should utilize the MICS to develop their own internal control standards that provide a level of control that equals or exceeds those set forth in this part and that address the particulars of their gaming operation(s). Doing so allows the opportunity of tailoring the MICS to meet the individual needs of a diverse industry. Tribes that do not extend credit are not required to include credit standards in their tribal internal control standards.

Section 542.16 Information Technology

Section 542.16(a)(1)(i) requires that all new vendor hardware and software agreements contain language requiring a vendor to adhere to tribal internal control standards. Two commenters opposed this requirement stating that such a requirement may create too few companies willing to do business with the Tribe. The Commission believes that, in order to protect the integrity of the systems provided by third-party vendors, this standard is necessary.

One commenter suggested adding the language ''applicable to the goods or services the vendor is providing'' to the end of § 542.16(a)(1)(i) to clarify what information is required. The language was added.

One commenter asked whether § 542.16(f)(1)(iii) requires a gaming operation to send computer hardware to the Commission for the purpose of performing auditing procedures. It does not. This standard instead requires that the Commission have access to hardware while on site.

Section 542.17 Complimentary Services or Items

The use of complimentary services or items, commonly known as ''comps,'' is customary throughout the gaming industry. This is true not only of commercial gaming, but also of Indian gaming. The Commission does not prohibit the use of comps in Indian gaming. To the contrary, the Commission believes that tribal gaming operations should possess the same business tools as commercial gaming so they can compete on an equal footing.

Complimentaries are typically used for marketing or promotional purposes. They can be used to entice new customers, reward continuing customers, or promote community goodwill. Because the issuance of a comp amounts to the provision of goods or services, comps result in a cost to the gaming operation. As such, a complimentary generally should not be issued unless it provides an economic benefit, real or potential, to the operation.

Determining how much of a gaming operation's resources should be expended on comps, as well as to whom they should be awarded, is a decision dictated by market conditions and unique to each operation. A gaming operation in a tightly competitive market may rely on comps to a much greater degree to attract or retain patrons than a gaming operation in a market with little local competition. When implemented properly, a gaming operation's use of comps will improve revenues and profitability, and ensure that the operation is competing effectively for the gaming customers within its market.

A number of commenters and members of the Advisory Committee objected to § 542.17 being included in the MICS. Most view complimentaries as a business decision and outside the scope of the Commission's authority. While the Commission agrees that the use of comps involves important business decisions, it also recognizes that abuse can amount to misappropriation of gaming revenues.

Given that the issuance of a complimentary results in an expense to the operation, misuse negatively impacts gaming revenues. This lowering of gaming revenues leads directly to a reduction in the amount of revenues available for transfer to the Tribal government, and in turn, a reduction in the overall services a Tribe can provide to its members. Misuse of complimentaries thereby thwarts the principle that gaming revenues should benefit the Tribal community as a whole, and not individuals. Without clearly defined procedures for the authorization, issuance, and tracking of complimentaries, the potential for abuse can escalate.

Several comments prompt a discussion about the difference between complimentaries and expenditures by a Tribal government. Most Tribes have a number of businesses or enterprises operated for economic development. It is customary that at some point during the year, each of these businesses or enterprises transfer a portion of their net revenues to the Tribal government in order to fund governmental operations. Some commenters expressed concern that the Commission has placed restrictions upon the manner in which a Tribal government can spend these revenues. The Commission has not. Instead, the Congress stipulated such limitations when they enacted the Indian Gaming Regulatory Act (IGRA). Revenues transferred to a Tribal government from a gaming operation must be spent as specified by the Congress within the IGRA.

It is also important to note that expenditures of net gaming revenues by Tribal governments are not ''complimentaries.'' ''Complimentaries'' is a term used to define certain types of expenditures of a gaming operation, not expenditures of a Tribal government. Because expenditures of net gaming

revenues by a Tribal government are not comps, they are therefore outside the scope of these MICS.

In response to numerous comments, the requirement that certain data be obtained for all complimentary services or items that exceed $50.00 has been modified to state that the collection of such data is not required for complimentary services or items below a ''reasonable amount'' to be established by the Tribal gaming regulatory authority. It is the Commission's view that for some large operations in a competitive market, $100 may be a reasonable amount. For others, $20 may be more appropriate. In any case, the Commission recognizes that the Tribal gaming regulatory authority can most appropriately establish this amount.

Section 542.18 Variances

This section was restructured to provide clarity and to recognize that the Tribal gaming regulatory authority, in the first instance, should determine whether the gaming operation should be granted a variance. Clearly, tribal regulators who are most familiar with a gaming operation are best equipped to make these initial determinations. The Commission would then be requested to concur with the variance. If the Commission does not agree, it must justify its objection. The new process also allows for an appeal to the full Commission. A number of commenters agreed that the changes to this section are an improvement.

Many commenters believe that the ninety (90) day time frame for Commission action in § 542.18(b) is too long. Previous experience has shown that review of a variance approval can be lengthy, particularly where the variance is somewhat complicated or involves new technology. The Commission has a shortage of staff able to review variance approvals, and such activity requires reassignment from current workload. In many cases, review may also entail travel to the gaming operation, as well as review of equivalent standards in comparable gaming jurisdictions. In response to the numerous comments, however, the Commission has shortened its response time to sixty (60) days. Further shortening of this time frame was not entertained out of fear that it may lead to lack of concurrence simply because of insufficient time for review, as opposed to concern with the variance itself.

One commenter suggested a standard whereby the Commission would notify a Tribe if its Tribal gaming regulatory authority requests a variance. The Commission believes that communication between the Tribal gaming regulatory authority and the Tribe is important, but also believes that it is an internal matter better addressed by the Tribe than through the MICS.

One commenter suggested that a gaming operation be able to appeal a Tribal gaming regulatory authority's denial of a variance request directly to the Commission. Again, the Commission believes that this is an internal issue, best addressed by the Tribe.

Several commenters stated that the Commission should not be involved in the variance process and that such decisions should be left entirely to the Tribal gaming regulatory authority. While acknowledging the vital role Tribal gaming regulatory authorities play in the primary regulation of gaming, the Commission would find it problematical to review compliance of gaming operations if each were being operated under different variances. In addition to being time-consuming and an unnecessary waste of Commission resources, such a process could also lead to a situation where the Commission disagrees with the level of control provided by a variance after implementation, resulting in unnecessary expense to the gaming operation. Furthermore, the MICS are the Commission's regulation and it therefore follows that the Commission should ultimately be responsible for review of variances.

Several commenters requested that the effective date of a variance, discussed in § 542.17(e), be changed to the date approved by the Tribal gaming regulatory authority. The Commission believes that the gaming operation should comply with standards that achieve a level of control sufficient to accomplish the purpose of the standard it is to replace until such time as the Commission objects.

A commenter requested that the Commission publish approved variances. This issue was considered in developing the proposed rule and rejected because of concerns that a variance (often based on intimate knowledge of the requesting gaming operation) that works for one operation, may not be sufficient to meet the needs of another. Even so, the Commission agrees that having the ability to review approved variances may be of benefit to other Tribal gaming operations. The Commission agrees to make public on its web page a list of Tribes who have received a variance concurrence, including the particular standard of the MICS it addressed. Tribal gaming regulatory authorities may then contact each other for specific details of the variance. A variance continues to be applicable only to the operation receiving concurrence.

The Committee expressed concern that nowhere is it clearly indicated to whom requests for variances should be sent. The Commission agrees with this concern and has in the past recommended that requests for variances be clearly marked both on the request itself and on the outside of the envelope. The Committee asked that the Commission issue clear guidance about the procedures that should be followed in requesting a variance concurrence.

Section 542.20 Tier A Gaming Operations

Several commenters requested that the upper limit for Tier A be raised. Based upon earlier comments and input from the Advisory Committee, the upper limit for Tier A gaming operations has been increased from the current level of $3 million to $5 million. The Commission believes that further adjustment of the upper limit may result in an unacceptable risk to tribal assets.

Sections 542.21, 542.31, and 542.41 Drop and Count for Tier A, B, and C Gaming Operations

One commenter asked that the clause regarding computer applications, included elsewhere in the MICS, be added to drop and count. The Commission agrees and has added such language at §§ 542.21(a), 542.31(a), and 542.41(a).

While some commented favorably about no longer requiring the drop of tables that were not opened during a shift, others suggested that §§ 542.21(b)(2)(ii), 542.31(b)(2)(ii), and 542.41(b)(2)(ii) should continue to require that tables be dropped, whether opened or not. The Commission believes the new standard allows for flexibility, particularly for small gaming operations. If a Tribal gaming regulatory authority believes that all tables should be dropped, regardless of whether they were opened, they can include this higher standard in their tribal internal control standards.

Several commenters indicated that they use computerized bar codes to mark table game drop boxes. The Commission agrees that use of such technology satisfies the requirements of §§ 542.21(b)(5), 542.31(b)(5), and 542.41(b)(5).

One commenter suggested that no one other than count room personnel should be permitted to enter or exit the count room during the count. The Commission was concerned that this could be interpreted to include gaming regulators, which is not the intent of §§ 542.21(c)(2), 542.31(c)(2), and

542.41(c)(2). Therefore, no change was made.

Several commenters were concerned about lack of independence if a dealer or cage cashier is used as a member of the count team, as permitted by §§ 542.21(c)(4), 542.31(c)(4), and 542.41(c)(4). The Commission tends to agree, but is concerned about how removing this provision would impact small gaming operations. Therefore, the ability to utilize a dealer or cage cashier was removed only from § 542.41(c)(4).

One commenter stated that the second count required by §§ 542.21(d)(4)(ii), 542.31(d)(4)(ii), and 542.41(d)(4)(ii) should be conducted of each box. The standard requires only that a second count of the entire drop be conducted, which is believed to be an appropriate minimum standard. A second commenter asked if an automated currency counting machine meets the requirements of this standard. The Commission agrees that utilization of this type of technology is appropriate, so long as the system is capable of conducting two independent counts. Yet another commenter suggested requiring a blind second count. The Commission would agree that this provides an additional layer of security, but would not require blind counts of all operations. Similar comments and changes were also made to §§ 542.21(f)(4)(ii), 542.31(f)(4)(ii), and 542.41(f)(4)(ii).

The standard at §§ 542.31(e)(3)(i) and 542.41(e)(3)(i) regarding a surveillance log has been moved to the surveillance section upon a recommendation that surveillance would be the department responsible for keeping the log.

Several commenters indicated that they use computerized bar codes to mark bill acceptor canisters. The Commission agrees that use of such technology satisfies the requirements of §§ 542.21(e)(4), 542.31(e)(5), and 542.41(e)(5).

One commenter recommended modification to §§ 542.21(f)(11), 542.31(f)(11), and 542.41(f)(11) to allow authorized personnel access to stored bill acceptor canisters in an emergency for the resolution of a problem. The Commission agrees and appropriate language was added.

One commenter suggested modification to the on-the-floor drop system standards at §§ 542.21(i)(2)(i), 542.31(i)(2)(i), and 542.41(i)(2)(i). These changes were accepted.

Sections 542.22, 542.32, and 542.42 Internal Audit for Tier A, B, and C Gaming Operations

One commenter recommended that a tiered approach should be considered for internal audit testing. The commenter suggested that while annual testing was appropriate for Tier A operations, in some instances, Tiers B and C should complete testing on a more frequent basis. While the Commission supports testing on a more frequent basis, it is believed that the approach specified in these standards is an appropriate minimum standard.

Language was also added at §§ 542.22(b)(1)(xi), 542.32(b)(1)(xi), and 542.42(b)(1)(xi), that expands the entities entitled to ask for additional internal audits to include the Tribe, Tribal gaming regulatory authority, audit committee, or any other entity designated by the Tribe.

Sections 542.23, 542.33, and 542.43 Surveillance for Tier A, B, and C Gaming Operations

Several commenters requested clarification that Tier A gaming operations require only the ''recording'' of areas under surveillance, not ''monitoring.'' The Commission agrees. Unlike Tier B and C gaming operations, Tier A gaming operations are not required to maintain a staffed surveillance room. Therefore, ''monitoring'' is not required of Tier A gaming operations.

Several commenters also requested clarification of the meaning of the word ''monitor.'' The Commission agrees that it should be read as the ''ability to monitor.'' Surveillance personnel must continuously prioritize their activities as events unfold within the operation. To require ''continuous monitoring'' of one area or of one event may in fact divert attention from more pressing matters. The Commission does not expect continuous monitoring, only that surveillance personnel be able to monitor the particular area or event in the manner specified.

One commenter indicated concern with the camera coverage required by §§ 542.23(m), 542.33(p), and 542.43(q). The commenter believes that if camera coverage is set so that card values and suits can be clearly identified (as required by §§ 542.23(m)(1)(i), 542.33(p)(1)(i), and 542.43(q)(1)(i)), it may not be possible to also maintain an overall view of the entire table (as required by §§ 542.23(m)(1)(ii)), 542.33(p)(1)(ii)), and 542.43(q)(1)(ii)). These sections are not meant to specify the number or types of cameras that should be utilized. While several commenters suggested that the Commission should set a specific number and type of camera required for each standard, the Commission believes that the Tribal gaming regulatory authority and gaming operation are better suited to make this determination. As such, these sections are meant only to specify the required areas of coverage. To help alleviate any confusion, the beginning of the section was changed by deleting the word ''each.'' Similar changes were also made to other comparable sections of the MICS.

Some commenters requested clarification of the meaning of ''base payout amount'' as used in §§ 542.23(n)(2) and (3), 542.33(q)(2) and (3), and 542.43(r)(2) and (3). The base payout amount is the jackpot reset amount. Clarifying language has been added to §§ 542.23(n)(2), 542.33(q)(2), and 542.43(r)(2). By way of example, an in-house progressive machine offering a base payout (jackpot reset) amount of $90,000 that increases to $200,000, is not required to be monitored and recorded by a dedicated camera under this section because the base payout amount of $90,000 is less than the $100,000 threshold.

One commenter questioned why the surveillance standards are less stringent for wide-area progressive machines, in that the base payout amount requiring dedicated camera coverage is set at $1.5 million. (§§ 542.23(n)(3), 542.33(q)(3), 542.43(r)(3)) The Commission believes that because these games are monitored by independent vendors, primary payouts are made by independent vendors, and they utilize an on-line monitoring system, the threat to tribal gaming operations' assets are reduced and therefore, the surveillance requirements should be less stringent.

Several commenters objected to the standard contained within §§ 542.23(p)(3), 542.33(v)(3), and 542.43(w)(3) requiring that an original surveillance tape or digital recording be provided to the Commission. The standard was changed to allow Commission access to a duly authenticated copy instead of an original.

Section 542.30 Tier B Gaming Operations

Several commenters requested that the upper limit for Tier B be raised. Based upon earlier comments and input from the Advisory Committee, the upper limit for Tier B gaming operations has been increased from the current level of $10 million to $15 million. The Commission believes that further adjustment of the upper limit may result in an unacceptable risk to tribal assets.

Section 542.40 Tier C Gaming Operations

Several commenters requested that the threshold at which gaming operations become Tier C be raised.

Based upon earlier comments and input from the Advisory Committee, the level at which gaming operations become Tier C has been increased from $10 million to $15 million. The Commission believes that further adjustment may result in an unacceptable risk to tribal assets.

One commenter suggested requiring that all Tier C gaming operations install on-line accounting systems. While the Commission believes that on-line systems provide a higher level of protection of assets, we do not agree that, as a minimum standard, this system should be required.

Regulatory Flexibility Act

On April 23, 2002, the Commission published for public comment its certification that the proposed regulation would not have a significant impact on small entities. In response the Commission received nineteen comments. A majority of the comments received were similar, stating that the Commission had violated the Regulatory Flexibility Act by failing to prepare an analysis. The Commission disagrees. The Regulatory Flexibility Act allows an agency to certify that a proposed rule will not have a significant economic impact on small entities subject to the rule as long as the agency provides an explanation of the factual basis for the certification. 5 U.S.C. § 605(b). The Commission provided this basis in its notice dated April 23, 2002, and again certifies in this final rule.

A majority of the commenters also disagree with the Commission's determination that it possesses the statutory authority to promulgate this regulation. That issue is considered and addressed elsewhere in this preamble.

One commenter objected to the Commission's definition of ''small entity'' under the Regulatory Flexibility Act. The Commission, in determining that gaming operations with gross revenues under $5 million may qualify as ''small businesses'' and, therefore as ''small entities,'' relied, as does the Regulatory Flexibility Act, on the definitions contained with the Small Business Act, and associated regulations. 15 U.S.C. 632; 13 CFR 121.201. Therefore, the Commission disagrees with this comment.

The same commenter disagreed with the Commission's certification that this regulation does not impose significant economic costs to affected Indian gaming operations. The Commission disagrees. As stated in its certification, internal controls are requirements that are mandated by the nature of gaming operations. In the absence of federal regulations, Tribes would continue to incur many, if not all, of the same regulatory expenses. The same commenter suggested that the Commission should consider the effect of all of the Commission's regulatory activities in determining economic impact. The Commission is aware of its obligations under the Regulatory Flexibility Act and will continue to comply with the Act in fitting regulatory and informational requirements to the scale of entities subject to its regulations. For example, as stated in the request for public comment dated April 23, 2002, the Commission has tiered this regulation to take into account the needs of large and small gaming operations. The Commission's advisory committee consisted of representatives from both large and small gaming operations. The Commission also requested and responded to public comments in the form of written comments and held a public hearing.

One commenter stated that the Commission's proposal to exempt gaming operations grossing under $1 million from compliance with these regulations was commendable, but asked that the Commission consider exempting all gaming operations grossing less than $5 million from regulatory compliance. The Commission believes that such an exemption would jeopardize the integrity of Indian gaming as a whole; and exempting such a large group of gaming operations from federal oversight would be a shirking of the responsibilities of the Commission. The Commission does, however, realize that the costs of compliance with minimum internal control standards should reflect the risk of loss to Indian gaming operations. Because of this, the Commission has reduced the requirements of Tier A gaming facilities. In addition, tribal gaming regulatory authorities may request a variance from these requirements if adequate alternative controls are put in place. The Commission believes that the flexibility of the new regulation adequately addresses the concerns of smaller gaming operations, while fulfilling its statutory obligation of the federal oversight of Indian gaming.

Future Revisions to the MICS

Indian gaming, like commercial gaming, is an ever-changing industry. As new technology emerges and the industry itself continues to mature, this regulation will likewise require evolution. The MICS are a technical regulation greatly impacting all Tribal gaming operations. As such, input from those most affected is critical to developing a mutually beneficial regulatory framework. The Commission firmly believes that any future changes to this regulation be made in a fully consultative process, similar to the one utilized in developing this final rule.

Regulatory Matters

Regulatory Flexibility Act

The Commission certifies that the Minimum Internal Control Standards contained within this regulation will not have a significant economic impact on small entities, 5 U.S.C. 605(b). The factual basis for this certification is as follows:

Of the 315 Indian gaming operations across the country, approximately 100 of the operations have gross revenues of less than $5 million. Of these, approximately 50 operations have gross revenues of under $1 million. Since the proposed revisions will not apply to gaming operations with gross revenues under $1 million, only 50 small operations may be affected. While this is a substantial number, the Commission believes that the regulations will not have a significant economic impact on these operations for several reasons. First, internal controls are essential to gaming operations in order to protect assets. The costs involved in implementing these controls are part of the regular business costs incurred by such an operation. The Commission also believes that many Indian gaming operations have already implemented internal control standards that are more stringent than those contained in these regulations.

Under the proposed revisions, small gaming operations grossing under $1 million are exempted from MICS compliance. Tier A facilities (those with gross revenues between $1 and $5 million) are subject to the yearly requirement that independent certified public accountant testing occur. The purpose of this testing is to measure the gaming operation's compliance with the tribe's internal control standards. The cost of compliance with this requirement for a small gaming operation is estimated at between $3,000 and $5,000. The cost of this report is minimal and does not create a significant economic effect on gaming operations. What little impact exists is further offset because other regulations require a yearly independent financial audit that can be conducted at the same time. For these reasons, the Commission has concluded that the proposed rule will not have a significant economic impact on those small entities subject to the rule.

Small Business Regulatory Enforcement Fairness Act

This rule is not a major rule under 5 U.S.C. 804(2), the Small Business Regulatory Enforcement Fairness Act. This rule does not have an annual effect on the economy of $100 million or more. This rule will not cause a major increase in costs or prices for consumers, individual industries, Federal, state or local government agencies or geographic regions, and does not have a significant adverse effect on competition, employment, investment, productivity, innovation, or the ability of U.S. based enterprises to compete with foreign-based enterprises.

Unfunded Mandates Reform Act

The Commission is an independent regulatory agency and, as such, is not subject to the Unfunded Mandates Reform Act. Even so, the Commission has determined that this final rule does not impose an unfunded mandate on State, local, or tribal governments, or on the private sector, of more than $100 million per year. Thus, it is not a ''significant regulatory action'' under the Unfunded Mandates Reform Act, 2 U.S.C. 1501 *et seq.*

The Commission has, however, determined that this final rule may have a unique effect on tribal governments (this rule applies exclusively to tribal governments) whenever they undertake the ownership, operation, regulation, or licensing of gaming operations on Indian lands as defined by the Indian Gaming Regulatory Act. The Commission has therefore undertaken the following actions: on two occasions, made a request for public comment on changes to the regulation; formed a Tribal Advisory Committee to assist in writing the new regulation; held discussions with Tribal leaders and Tribal associations about desired changes to the regulation; prepared guidance material and model documents; held a public hearing; and continues to provide technical assistance.

Between May and November 2001, the Commission and the Tribal Advisory Committee met six times to develop a regulatory proposal. In selecting Committee members, consideration was placed on the applicant's experience in this area, as well as the size of the Tribe the nominee represented, geographic location of the Tribe's gaming operation, and the size and type of gaming conducted. The Commission believes it assembled a diverse Committee representative of Indian gaming interests.

Since beginning formulation of this final rule, the Commission spoke at several tribal association meetings. The Commission will develop guidance materials that will include guidelines for CPA firms who must audit gaming operations to determine compliance with tribal internal control standards. The Commission also held a public hearing on the proposed regulation prior to development and publication of a final rule. The Commission and the Tribal Advisory Committee met one last time to discuss the public comments received as a result of publication of the proposed rule and to develop a recommendation regarding the final rule. The Commission also plans on continuing its policy of providing technical assistance, through its field offices, to Tribes to assist in complying with the MICS.

Takings

In accordance with Executive Order 12630, the Commission has determined that this rule does not have significant takings implications. A takings implication assessment is not required.

Civil Justice Reform

In accordance with Executive Order 12988, the Office of General Counsel has determined that this rule does not unduly burden the judicial system and meets the requirements of sections 3(a) and 3(b)(2) of the Order.

Paperwork Reduction Act

This final rule requires an information collection under the Paperwork Reduction Act 44 U.S.C. 3501 *et seq.*, as did the regulation it replaces. There is no change to the paperwork requirements created by this amendment. The Commission's OMB Control number for this regulation is 3141–0009.

National Environmental Policy Act

The Commission has determined that this final rule does not constitute a major Federal action significantly affecting the quality of the human environment and that no detailed statement is required pursuant to the National Environmental Policy Act of 1969 (42 U.S.C. 4321 *et. seq*).

List of Subjects in 25 CFR Part 542

Accounting, Auditing, Gambling, Indian-lands, Indian-tribal government, Reporting and record keeping requirements.

For reasons stated in the preamble, the National Indian Gaming Commission revises 25 CFR part 542 to read as follows:

PART 542—MINIMUM INTERNAL CONTROL STANDARDS

Sec.

542.1 What does this part cover?
542.2 What are the definitions for this part?
542.3 How do I comply with this part?
542.4 How do these regulations affect minimum internal control standards establish in a Tribal-State compact?
542.5 How do these regulations affect state jurisdiction?
542.6 Does this part apply to small and charitable gaming operations?
542.7 What are the minimum internal control standards for bingo?
542.8 What are the minimum internal control standards for pull tabs?
542.9 What are the minimum internal control standards for card games?
542.10 What are the minimum internal control standards for keno?
542.11 What are the minimum internal control standards for pari-mutuel wagering?
542.12 What are the minimum internal control standards for table games?
542.13 What are the minimum internal control standards for gaming machines?
542.14 What are the minimum internal control standards for the cage?
542.15 What are the minimum internal control standards for credit?
542.16 What are the minimum internal control standards for information technology?
542.17 What are the minimum internal control standards for complimentary services or items?
542.18 How does a gaming operation apply for a variance from the standards of this part?
542.20 What is a Tier A gaming operation?
542.21 What are the minimum internal control standards for drop and count for Tier A gaming operations?
542.22 What are the minimum internal control standards for internal audit for Tier A gaming operations?
542.23 What are the minimum internal control standards for surveillance for Tier A gaming operations?
542.30 What is a Tier B gaming operation?
542.31 What are the minimum internal control standards for drop and count for Tier B gaming operations?
542.32 What are the minimum internal control standards for internal audit for Tier B gaming operations?
542.33 What are the minimum internal control standards for surveillance for Tier B gaming operations?
542.40 What is a Tier C gaming operation?
542.41 What are the minimum internal control standards for drop and count for Tier C gaming operations?
542.42 What are the minimum internal control standards for internal audit for Tier C gaming operations?
542.43 What are the minimum internal control standards for surveillance for a Tier C gaming operation?

Authority: 25 U.S.C. 2702(c), 2706(b)(10).

§ 542.1 What does this part cover?

This part establishes the minimum internal control standards for gaming operations on Indian land.

§ 542.2 What are the definitions for this part?

The definitions in this section shall apply to all sections of this part unless otherwise noted.

Account access card means an instrument used to access customer accounts for wagering at a gaming machine. Account access cards are used in connection with a computerized account database.

Accountability means all items of cash, chips, coins, tokens, plaques, receivables, and customer deposits constituting the total amount for which the bankroll custodian is responsible at a given time.

Accumulated credit payout means credit earned in a gaming machine that is paid to a customer manually in lieu of a machine payout.

Actual hold percentage means the percentage calculated by dividing the win by the drop or coin-in (number of credits wagered). Can be calculated for individual tables or gaming machines, type of table games, or gaming machines on a per day or cumulative basis.

Ante means a player's initial wager or predetermined contribution to the pot before the dealing of the first hand.

Betting station means the area designated in a pari-mutuel area that accepts wagers and pays winning bets.

Betting ticket means a printed, serially numbered form used to record the event upon which a wager is made, the amount and date of the wager, and sometimes the line or spread (odds).

Bill acceptor means the device that accepts and reads cash by denomination in order to accurately register customer credits.

Bill acceptor canister means the box attached to the bill acceptor used to contain cash received by bill acceptors.

Bill acceptor canister release key means the key used to release the bill acceptor canister from the bill acceptor device.

Bill acceptor canister storage rack key means the key used to access the storage rack where bill acceptor canisters are secured.

Bill acceptor drop means cash contained in bill acceptor canisters.

Bill-in meter means a meter included on a gaming machine accepting cash that tracks the number of bills put in the machine.

Boxperson means the first-level supervisor who is responsible for directly participating in and supervising the operation and conduct of a craps game.

Breakage means the difference between actual bet amounts paid out by a racetrack to bettors and amounts won due to bet payments being rounded up or down. For example, a winning bet that should pay $4.25 may be actually paid at $4.20 due to rounding.

Cage means a secure work area within the gaming operation for cashiers and a storage area for the gaming operation bankroll.

Cage accountability form means an itemized list of the components that make up the cage accountability.

Cage credit means advances in the form of cash or gaming chips made to customers at the cage. Documented by the players signing an IOU or a marker similar to a counter check.

Cage marker form means a document, signed by the customer, evidencing an extension of credit at the cage to the customer by the gaming operation.

Calibration module means the section of a weigh scale used to set the scale to a specific amount or number of coins to be counted.

Call bets means a wager made without cash or chips, reserved for a known customer and includes marked bets (which are supplemental bets made during a hand of play). For the purpose of settling a call bet, a hand of play in craps is defined as a natural winner (e.g., seven or eleven on the come-out roll), a natural loser (e.g., a two, three or twelve on the come-out roll), a seven-out, or the player making his point, whichever comes first.

Card game means a game in which the gaming operation is not party to wagers and from which the gaming operation receives compensation in the form of a rake, a time buy-in, or other fee or payment from a player for the privilege of playing.

Card room bank means the operating fund assigned to the card room or main card room bank.

Cash-out ticket means an instrument of value generated by a gaming machine representing a cash amount owed to a customer at a specific gaming machine. This instrument may be wagered at other machines by depositing the cash-out ticket in the machine bill acceptor.

Chips means cash substitutes, in various denominations, issued by a gaming operation and used for wagering.

Coin-in meter means the meter that displays the total amount wagered in a gaming machine that includes coins-in and credits played.

Coin meter count machine means a device used in a coin room to count coin.

Coin room means an area where coins and tokens are stored.

Coin room inventory means coins and tokens stored in the coin room that are generally used for gaming machine department operation.

Commission means the National Indian Gaming Commission.

Complimentary means a service or item provided at no cost, or at a reduced cost, to a customer.

Count means the total funds counted for a particular game, gaming machine, shift, or other period.

Count room means a room where the coin and cash drop from gaming machines, table games, or other games are transported to and counted.

Count team means personnel that perform either the count of the gaming machine drop and/or the table game drop.

Counter check means a form provided by the gaming operation for the customer to use in lieu of a personal check.

Credit means the right granted by a gaming operation to a customer to defer payment of debt or to incur debt and defer its payment.

Credit limit means the maximum dollar amount of credit assigned to a customer by the gaming operation.

Credit slip means a form used to record either:

(1) The return of chips from a gaming table to the cage; or

(2) The transfer of IOUs, markers, or negotiable checks from a gaming table to a cage or bankroll.

Customer deposits means the amounts placed with a cage cashier by customers for the customers' use at a future time.

Deal means a specific pull tab game that has a specific serial number associated with each game.

Dealer means an employee who operates a game, individually or as a part of a crew, administering house rules and making payoffs.

Dedicated camera means a video camera required to continuously record a specific activity.

Deskman means a person who authorizes payment of winning tickets and verifies payouts for keno games.

Draw ticket means a blank keno ticket whose numbers are punched out when balls are drawn for the game. Used to verify winning tickets.

Drop (for gaming machines) means the total amount of cash, cash-out tickets, coupons, coins, and tokens removed from drop buckets and/or bill acceptor canisters.

Drop (for table games) means the total amount of cash, chips, and tokens removed from drop boxes, plus the amount of credit issued at the tables.

Drop box means a locked container affixed to the gaming table into which

the drop is placed. The game type, table number, and shift are indicated on the box.

Drop box contents keys means the key used to open drop boxes.

Drop box release keys means the key used to release drop boxes from tables.

Drop box storage rack keys means the key used to access the storage rack where drop boxes are secured.

Drop bucket means a container located in the drop cabinet (or in a secured portion of the gaming machine in coinless/cashless configurations) for the purpose of collecting coins, tokens, cash-out tickets, and coupons from the gaming machine.

Drop cabinet means the wooden or metal base of the gaming machine that contains the gaming machine drop bucket.

Earned and unearned take means race bets taken on present and future race events. Earned take means bets received on current or present events. Unearned take means bets taken on future race events.

EPROM means erasable programmable read-only memory or other equivalent game software media.

Fill means a transaction whereby a supply of chips, coins, or tokens is transferred from a bankroll to a table game or gaming machine.

Fill slip means a document evidencing a fill.

Flare means the information sheet provided by the manufacturer that sets forth the rules of a particular pull tab game and that is associated with a specific deal of pull tabs. The flare shall contain the following information:

(1) Name of the game;

(2) Manufacturer name or manufacturer's logo;

(3) Ticket count; and

(4) Prize structure, which shall include the number of winning pull tabs by denomination, with their respective winning symbols, numbers, or both.

Future wagers means bets on races to be run in the future (e.g., Kentucky Derby).

Game server means an electronic selection device, utilizing a random number generator.

Gaming machine means an electronic or electromechanical machine which contains a microprocessor with random number generator capability which allows a player to play games of chance, some of which may be affected by skill, which machine is activated by the insertion of a coin, token or cash, or by the use of a credit, and which awards game credits, cash, tokens, or replays, or a written statement of the player's accumulated credits, which written statements be redeemable for cash.

Gaming machine analysis report means a report prepared that compares theoretical to actual hold by a gaming machine on a monthly or other periodic basis.

Gaming machine booths and change banks means a booth or small cage in the gaming machine area used to provide change to players, store change aprons and extra coin, and account for jackpot and other payouts.

Gaming machine count means the total amount of coins, tokens, and cash removed from a gaming machine. The amount counted is entered on the Gaming Machine Count Sheet and is considered the drop. Also, the procedure of counting the coins, tokens, and cash or the process of verifying gaming machine coin and token inventory.

Gaming machine pay table means the reel strip combinations illustrated on the face of the gaming machine that can identify payouts of designated coin amounts.

Gaming operation accounts receivable (for gaming operation credit) means credit extended to gaming operation customers in the form of markers, returned checks, or other credit instruments that have not been repaid.

Gross gaming revenue means annual total amount of cash wagered on class II and class III games and admission fees (including table or card fees), less any amounts paid out as prizes or paid for prizes awarded.

Hold means the relationship of win to coin-in for gaming machines and win to drop for table games.

Hub means the person or entity that is licensed to provide the operator of a pari-mutuel wagering operation information related to horse racing that is used to determine winners of races or payoffs on wagers accepted by the pari-mutuel wagering operation.

Internal audit means persons who perform an audit function of a gaming operation that are independent of the department subject to audit. Independence is obtained through the organizational reporting relationship, as the internal audit department shall not report to management of the gaming operation. Internal audit activities should be conducted in a manner that permits objective evaluation of areas examined. Internal audit personnel may provide audit coverage to more than one operation within a Tribe's gaming operation holdings.

Issue slip means a copy of a credit instrument that is retained for numerical sequence control purposes.

Jackpot payout means the portion of a jackpot paid by gaming machine personnel. The amount is usually determined as the difference between the total posted jackpot amount and the coins paid out by the machine. May also be the total amount of the jackpot.

Lammer button means a type of chip that is placed on a gaming table to indicate that the amount of chips designated thereon has been given to the customer for wagering on credit before completion of the credit instrument. Lammer button may also mean a type of chip used to evidence transfers between table banks and card room banks.

Linked electronic game means any game linked to two (2) or more gaming operations that are physically separate and not regulated by the same Tribal gaming regulatory authority.

Main card room bank means a fund of cash, coin, and chips used primarily for poker and pan card game areas. Used to make even cash transfers between various games as needed. May be used similarly in other areas of the gaming operation.

Marker means a document, signed by the customer, evidencing an extension of credit to him by the gaming operation.

Marker credit play means that players are allowed to purchase chips using credit in the form of a marker.

Marker inventory form means a form maintained at table games or in the gaming operation pit that are used to track marker inventories at the individual table or pit.

Marker transfer form means a form used to document transfers of markers from the pit to the cage.

Master credit record means a form to record the date, time, shift, game, table, amount of credit given, and the signatures or initials of the persons extending the credit.

Master game program number means the game program number listed on a gaming machine EPROM.

Master game sheet means a form used to record, by shift and day, each table game's winnings and losses. This form reflects the opening and closing table inventories, the fills and credits, and the drop and win.

Mechanical coin counter means a device used to count coins that may be used in addition to or in lieu of a coin weigh scale.

Meter means an electronic (soft) or mechanical (hard) apparatus in a gaming machine. May record the number of coins wagered, the number of coins dropped, the number of times the handle was pulled, or the number of coins paid out to winning players.

MICS means minimum internal control standards in this part 542.

Motion activated dedicated camera means a video camera that, upon its

detection of activity or motion in a specific area, begins to record the activity or area.

Multi-game machine means a gaming machine that includes more than one type of game option.

Multi-race ticket means a keno ticket that is played in multiple games.

On-line gaming machine monitoring system means a system used by a gaming operation to monitor gaming machine meter readings and/or other activities on an on-line basis.

Order for credit means a form that is used to request the transfer of chips or markers from a table to the cage. The order precedes the actual transfer transaction that is documented on a credit slip.

Outstation means areas other than the main keno area where bets may be placed and tickets paid.

Par percentage means the percentage of each dollar wagered that the house wins (i.e., gaming operation advantage).

Par sheet means a specification sheet for a gaming machine that provides machine hold percentage, model number, hit frequency, reel combination, number of reels, number of coins that can be accepted, and reel strip listing.

Pari-mutuel wagering means a system of wagering on horse races, jai-alai, greyhound, and harness racing, where the winners divide the total amount wagered, net of commissions and operating expenses, proportionate to the individual amount wagered.

Payment slip means that part of a marker form on which customer payments are recorded.

Payout means a transaction associated with a winning event.

PIN means the personal identification number used to access a player's account.

Pit podium means a stand located in the middle of the tables used by gaming operation supervisory personnel as a workspace and a record storage area.

Pit supervisor means the employee who supervises all games in a pit.

Player tracking system means a system typically used in gaming machine departments that can record the gaming machine play of individual customers.

Post time means the time when a pari-mutuel track stops accepting bets in accordance with rules and regulations of the applicable jurisdiction.

Primary and secondary jackpots means promotional pools offered at certain card games that can be won in addition to the primary pot.

Progressive gaming machine means a gaming machine, with a payoff indicator, in which the payoff increases as it is played (i.e., deferred payout). The payoff amount is accumulated, displayed on a machine, and will remain until a player lines up the jackpot symbols that result in the progressive amount being paid.

Progressive jackpot means deferred payout from a progressive gaming machine.

Progressive table game means table games that offer progressive jackpots.

Promotional payout means merchandise or awards given to players by the gaming operation based on a wagering activity.

Promotional progressive pots and/or pools means funds contributed to a table game by and for the benefit of players. Funds are distributed to players based on a predetermined event.

Rabbit ears means a device, generally V-shaped, that holds the numbered balls selected during a keno or bingo game so that the numbers are visible to players and employees.

Rake means a commission charged by the house for maintaining or dealing a game such as poker.

Rake circle means the area of a table where rake is placed.

Random number generator means a device that generates numbers in the absence of a pattern. May be used to determine numbers selected in various games such as keno and bingo. Also commonly used in gaming machines to generate game outcome.

Reel symbols means symbols listed on reel strips of gaming machines.

Rim credit means extensions of credit that are not evidenced by the immediate preparation of a marker and does not include call bets.

Runner means a gaming employee who transports chips/cash to or from a gaming table and a cashier.

SAM means a screen-automated machine used to accept pari-mutuel wagers. SAM's also pay winning tickets in the form of a voucher, which is redeemable for cash.

Shift means an eight-hour period, unless otherwise approved by the Tribal gaming regulatory authority, not to exceed twenty-four (24) hours.

Shill means an employee financed by the house and acting as a player for the purpose of starting or maintaining a sufficient number of players in a game.

Short pay means a payoff from a gaming machine that is less than the listed amount.

Soft count means the count of the contents in a drop box or a bill acceptor canister.

Sufficient clarity means use of monitoring and recording at a minimum of twenty (20) frames per second. Multiplexer tape recordings are insufficient to satisfy the requirement of sufficient clarity.

Surveillance room means a secure location(s) in a gaming operation used primarily for casino surveillance.

Surveillance system means a system of video cameras, monitors, recorders, video printers, switches, selectors, and other ancillary equipment used for casino surveillance.

Table games means games that are banked by the house or a pool whereby the house or the pool pays all winning bets and collects from all losing bets.

Table inventory means the total coins, chips, and markers at a table.

Table inventory form means the form used by gaming operation supervisory personnel to document the inventory of chips, coins, and tokens on a table at the beginning and ending of a shift.

Table tray means the container located on gaming tables where chips, coins, or cash are stored that are used in the game.

Take means the same as earned and unearned take.

Theoretical hold means the intended hold percentage or win of an individual gaming machine as computed by reference to its payout schedule and reel strip settings or EPROM.

Theoretical hold worksheet means a worksheet provided by the manufacturer for all gaming machines that indicate the theoretical percentages that the gaming machine should hold based on adequate levels of coin-in. The worksheet also indicates the reel strip settings, number of credits that may be played, the payout schedule, the number of reels and other information descriptive of the particular type of gaming machine.

Tier A means gaming operations with annual gross gaming revenues of more than $1 million but not more than $5 million.

Tier B means gaming operations with annual gross gaming revenues of more than $5 million but not more than $15 million.

Tier C means gaming operations with annual gross gaming revenues of more than $15 million.

Tokens means a coin-like cash substitute, in various denominations, used for gambling transactions.

Tribal gaming regulatory authority means the tribally designated entity responsible for gaming regulation.

Vault means a secure area within the gaming operation where tokens, checks, cash, coins, and chips are stored.

Weigh/count means the value of coins and tokens counted by a weigh machine.

Weigh scale calibration module means the device used to adjust a coin weigh scale.

Weigh scale interface means a communication device between the weigh scale used to calculate the amount of funds included in drop buckets and the computer system used to record the weigh data.

Weigh tape means the tape where weighed coin is recorded.

Wide area progressive gaming machine means a progressive gaming machine that is linked to machines in other operations and play on the machines affect the progressive amount. As wagers are placed, the progressive meters on all of the linked machines increase.

Win means the net win resulting from all gaming activities. Net win results from deducting all gaming losses from all wins prior to considering associated operating expenses.

Win-to-write hold percentage means win divided by write to determine hold percentage.

Wrap means the method of storing coins after the count process has been completed, including, but not limited to, wrapping, racking, or bagging. May also refer to the total amount or value of the counted and stored coins.

Write means the total amount wagered in keno, bingo, pull tabs, and pari-mutuel operations.

Writer means an employee who writes keno, bingo, pull tabs, or pari-mutuel tickets. A keno writer usually also makes payouts.

§ 542.3 How do I comply with this part?

(a) *Compliance based upon tier.* (1) Tier A gaming operations must comply with §§ 542.1 through 542.18, and §§ 542.20 through 542.23.

(2) Tier B gaming operations must comply with §§ 542.1 through 542.18, and §§ 542.30 through 542.33.

(3) Tier C gaming operations must comply with §§ 542.1 through 542.18, and §§ 542.40 through 542.43.

(b) *Determination of tier.* (1) The determination of tier level shall be made based upon the annual gross gaming revenues indicated within the gaming operation's audited financial statements. Gaming operations moving from one tier to another shall have nine (9) months from the date of the independent certified public accountant's audit report to achieve compliance with the requirements of the new tier.

(2) The Tribal gaming regulatory authority may extend the deadline by an additional six (6) months if written notice is provided to the Commission no later than two weeks before the expiration of the nine (9) month period.

(c) *Tribal internal control standards.* Within six (6) months of June 27, 2002, each Tribal gaming regulatory authority shall, in accordance with the Tribal gaming ordinance, establish and implement tribal internal control standards that shall:

(1) Provide a level of control that equals or exceeds those set forth in this part;

(2) Contain standards for currency transaction reporting that comply with 31 CFR part 103;

(3) Establish standards for games that are not addressed in this part; and

(4) Establish a deadline, which shall not exceed nine (9) months from June 27, 2002, by which a gaming operation must come into compliance with the tribal internal control standards. However, the Tribal gaming regulatory authority may extend the deadline by an additional six (6) months if written notice is provided to the Commission no later than two weeks before the expiration of the nine (9) month period.

(d) *Gaming operations.* Each gaming operation shall develop and implement an internal control system that, at a minimum, complies with the tribal internal control standards.

(1) *Existing gaming operations.* All gaming operations that are operating on or before June 27, 2002, shall comply with this part within the time requirements established in paragraph (c) of this section. In the interim, such operations shall continue to comply with existing tribal internal control standards.

(2) *New gaming operations.* All gaming operations that commence operations after August 26, 2002, shall comply with this part before commencement of operations.

(e) *Submission to Commission.* Tribal regulations promulgated pursuant to this part shall not be required to be submitted to the Commission pursuant to 25 CFR 522.3(b).

(f) *CPA testing.* (1) An independent certified public accountant (CPA) shall be engaged to perform procedures to verify, on a test basis, that the gaming operation is in material compliance with the tribal internal control standards or a tribally approved variance that has received Commission concurrence. The procedures may be performed in conjunction with the annual audit. The CPA shall report its findings to the Tribe, Tribal gaming regulatory authority, and management. The Tribe shall submit a copy of the report to the Commission within 120 days of the gaming operation's fiscal year end.

(2) *CPA Guidelines.* In connection with the CPA testing pursuant to paragraph (f)(1) of this section, the Commission shall develop recommended CPA Guidelines available upon request.

(g) *Enforcement of Commission Minimum Internal Control Standards.* (1) Each Tribal gaming regulatory authority is required to establish and implement internal control standards pursuant to paragraph (c) of this section. Each gaming operation is then required, pursuant to paragraph (d) of this section, to develop and implement an internal control system that complies with the Tribal internal control standards. Failure to do so may subject the Tribal operator of the gaming operation, and/or the management contractor, to penalties under 25 U.S.C. 2713.

(2) Recognizing that Tribes are the primary regulator of their gaming operation(s), enforcement action by the Commission will not be initiated under this part without first informing the Tribe and Tribal gaming regulatory authority of deficiencies in the internal controls of its gaming operation and allowing a reasonable period of time to address such deficiencies. Such prior notice and opportunity for corrective action is not required where the threat to the integrity of the gaming operation is immediate and severe.

§ 542.4 How do these regulations affect minimum internal control standards established in a Tribal-State compact?

(a) If there is a direct conflict between an internal control standard established in a Tribal-State compact and a standard or requirement set forth in this part, then the internal control standard established in a Tribal-State compact shall prevail.

(b) If an internal control standard in a Tribal-State compact provides a level of control that equals or exceeds the level of control under an internal control standard or requirement set forth in this part, then the Tribal-State compact standard shall prevail.

(c) If an internal control standard or a requirement set forth in this part provides a level of control that exceeds the level of control under an internal control standard established in a Tribal-State compact, then the internal control standard or requirement set forth in this part shall prevail.

§ 542.5 How do these regulations affect state jurisdiction?

Nothing in this part shall be construed to grant to a state jurisdiction in class II gaming or extend a state's jurisdiction in class III gaming.

§ 542.6 Does this part apply to small and charitable gaming operations?

(a) *Small gaming operations.* This part shall not apply to small gaming operations provided that:

(1) The Tribal gaming regulatory authority permits the operation to be exempt from this part;

(2) The annual gross gaming revenue of the operation does not exceed $1 million; and

(3) The Tribal gaming regulatory authority develops and the operation complies with alternate procedures that:

(i) Protect the integrity of games offered; and

(ii) Safeguard the assets used in connection with the operation.

(b) *Charitable gaming operations.* This part shall not apply to charitable gaming operations provided that:

(1) All proceeds are for the benefit of a charitable organization;

(2) The Tribal gaming regulatory authority permits the charitable organization to be exempt from this part;

(3) The charitable gaming operation is operated wholly by the charitable organization's employees or volunteers;

(4) The annual gross gaming revenue of the charitable gaming operation does not exceed $100,000;

(i) Where the annual gross gaming revenues of the charitable gaming operation exceed $100,000, but are less than $1 million, paragraph (a) of this section shall also apply; and

(ii) [Reserved]

(5) The Tribal gaming regulatory authority develops and the charitable gaming operation complies with alternate procedures that:

(i) Protect the integrity of the games offered; and

(ii) Safeguard the assets used in connection with the gaming operation.

(c) *Independent operators.* Nothing in this section shall exempt gaming operations conducted by independent operators for the benefit of a charitable organization.

§ 542.7 What are the minimum internal control standards for bingo?

(a) *Computer applications.* For any computer applications utilized, alternate documentation and/or procedures that provide at least the level of control described by the standards in this section, as approved by the Tribal gaming regulatory authority, will be acceptable.

(b) *Game play standards.* (1) The functions of seller and payout verifier shall be segregated. Employees who sell cards on the floor shall not verify payouts with cards in their possession. Floor clerks who sell cards on the floor are permitted to announce the serial numbers of winning cards.

(2) All sales of bingo cards shall be documented by recording at least the following:

(i) Date;

(ii) Shift (if applicable);

(iii) Session (if applicable);

(iv) Dollar amount;

(v) Signature, initials, or identification number of at least one seller (if manually documented); and

(vi) Signature, initials, or identification number of a person independent of the seller who has randomly verified the card sales (this requirement is not applicable to locations with $1 million or less in annual write).

(3) The total win and write shall be computed and recorded by shift (or session, if applicable).

(4) The Tribal gaming regulatory authority, or the gaming operation as approved by the Tribal gaming regulatory authority, shall establish and the gaming operation shall comply with procedures that ensure the correct calling of numbers selected in the bingo game.

(5) Each ball shall be shown to a camera immediately before it is called so that it is individually displayed to all customers. For speed bingo games not verified by camera equipment, each ball drawn shall be verified by a person independent of the bingo caller responsible for calling the speed bingo game.

(6) For all coverall games and other games offering a payout of $1,200 or more, as the balls are called the numbers shall be immediately recorded by the caller and maintained for a minimum of twenty-four (24) hours.

(7) Controls shall be present to assure that the numbered balls are placed back into the selection device prior to calling the next game.

(8) The authenticity of each payout shall be verified by at least two persons. A computerized card verifying system may function as the second person verifying the payout if the card with the winning numbers is displayed on a reader board.

(9) Payouts in excess of $1,200 shall require written approval, by personnel independent of the transaction, that the bingo card has been examined and verified with the bingo card record to ensure that the ticket has not been altered.

(10) Total payout shall be computed and recorded by shift or session, if applicable.

(c) *Promotional payouts or awards.* (1) If the gaming operation offers promotional payouts or awards, the payout form/documentation shall include the following information:

(i) Date and time;

(ii) Dollar amount of payout or description of personal property (*e.g.*, jacket, toaster, car, etc.), including fair market value;

(iii) Type of promotion; and

(iv) Signature of at least one employee authorizing and completing the transaction.

(2) [Reserved]

(d) *Accountability form.* (1) All funds used to operate the bingo department shall be recorded on an accountability form.

(2) All funds used to operate the bingo department shall be counted independently by at least two persons and reconciled to the recorded amounts at the end of each shift or session.

(e) *Bingo equipment.* (1) Access to controlled bingo equipment (e.g., blower, balls in play, and back-up balls) shall be restricted to authorized persons.

(2) The procedures established by the Tribal gaming regulatory authority, or the gaming operation as approved by the Tribal gaming regulatory authority, shall include standards relating to the inspection of new bingo balls put into play as well as for those in use.

(3) Bingo equipment shall be maintained and checked for accuracy on a periodic basis.

(4) The bingo card inventory shall be controlled so as to assure the integrity of the cards being used as follows:

(i) Purchased paper shall be inventoried and secured by a person or persons independent of the bingo sales;

(ii) The issue of paper to the cashiers shall be documented and signed for by the person responsible for inventory control and a cashier. The document log shall include the series number of the bingo paper;

(iii) A copy of the bingo paper control log shall be given to the bingo ball caller for purposes of determining if the winner purchased the paper that was issued for sale that day (electronic verification satisfies this standard);

(iv) At the end of each month, a person or persons independent of bingo sales and inventory control shall verify the accuracy of the ending balance in the bingo paper control by reconciling the paper on-hand;

(v) A monthly comparison for reasonableness shall be made of the amount of paper sold from the bingo paper control log to the amount of revenue recognized.

(f) *Standards for statistical reports.* (1) Records shall be maintained, which include win, write (card sales), and a win-to-write hold percentage, for:

(i) Each shift or each session;

(ii) Each day;

(iii) Month-to-date; and

(iv) Year-to-date or fiscal year-to-date.

(2) A manager independent of the bingo department shall review bingo statistical information on at least a monthly basis and investigate any large or unusual statistical fluctuations.

(3) Investigations shall be documented, maintained for inspection, and provided to the Tribal gaming regulatory authority upon request.

(g) *Electronic equipment.* (1) If the gaming operation utilizes electronic equipment in connection with the play of bingo, then the following standards shall also apply.

(i) If the electronic equipment contains a bill acceptor, then § 542.21(d) and (e), § 542.31(d) and (e), or § 542.41(d) and (e) (as applicable) shall apply.

(ii) If the electronic equipment uses a bar code or microchip reader, the reader shall be tested periodically by a person or persons independent of the bingo department to determine that it is correctly reading the bar code or the microchip.

(iii) If the electronic equipment returns a voucher or a payment slip to the player, then § 542.13(n) (as applicable) shall apply.

(2) [Reserved]

(h) *Standards for linked electronic games.* Management shall ensure that all agreements/contracts entered into after June 27, 2002 to provide linked electronic games shall contain language requiring the vendor to comply with the standards in this section applicable to the goods or services the vendor is providing.

(i) *Host requirements/game information (for linked electronic games).* (1) Providers of any linked electronic game(s) shall maintain complete records of game data for a period of one (1) year from the date the games are played (or a time frame established by the Tribal gaming regulatory authority). This data may be kept in an archived manner, provided the information can be produced within twenty-four (24) hours upon request. In any event, game data for the preceding seventy-two (72) hours shall be immediately accessible.

(2) Data required to be maintained for each game played includes:

(i) Date and time game start and game end;

(ii) Sales information by location;

(iii) Cash distribution by location;

(iv) Refund totals by location;

(v) Cards-in-play count by location;

(vi) Identification number of winning card(s);

(vii) Ordered list of bingo balls drawn; and

(viii) Prize amounts at start and end of game.

(j) *Host requirements/sales information (for linked electronic games).* (1) Providers of any linked electronic game(s) shall maintain complete records of sales data for a period of one (1) year from the date the games are played (or a time frame established by the Tribal gaming regulatory authority). This data may be kept in an archived manner, provided the information can be produced within twenty-four (24) hours upon request. In any event, sales data for the preceding ten (10) days shall be immediately accessible. Summary information must be accessible for at least 120 days.

(2) Sales information required shall include:

(i) Daily sales totals by location;

(ii) Commissions distribution summary by location;

(iii) Game-by-game sales, prizes, refunds, by location; and

(iv) Daily network summary, by game by location.

(k) *Remote host requirements (for linked electronic games).* (1) Linked electronic game providers shall maintain on-line records at the remote host site for any game played. These records shall remain on-line until the conclusion of the session of which the game is a part. Following the conclusion of the session, records may be archived, but in any event, must be retrievable in a timely manner for at least seventy-two (72) hours following the close of the session. Records shall be accessible through some archived media for at least ninety (90) days from the date of the game.

(2) Game information required includes date and time of game start and game end, sales totals, cash distribution (prizes) totals, and refund totals.

(3) Sales information required includes cash register reconciliations, detail and summary records for purchases, prizes, refunds, credits, and game/sales balance for each session.

(l) *Standards for player accounts (for proxy play and linked electronic games).* (1) Prior to participating in any game, players shall be issued a unique player account number. The player account number can be issued through the following means:

(i) Through the use of a point-of-sale (cash register device);

(ii) By assignment through an individual play station; or

(iii) Through the incorporation of a ''player tracking'' media.

(2) Printed receipts issued in conjunction with any player account should include a time/date stamp.

(3) All player transactions shall be maintained, chronologically by account number, through electronic means on a data storage device. These transaction records shall be maintained on-line throughout the active game and for at least twenty-four (24) hours before they can be stored on an ''off-line'' data storage media.

(4) The game software shall provide the ability to, upon request, produce a printed account history, including all transactions, and a printed game summary (total purchases, deposits, wins, debits, for any account that has been active in the game during the preceding twenty-four (24) hours).

(5) The game software shall provide a ''player account summary'' at the end of every game. This summary shall list all accounts for which there were any transactions during that game day and include total purchases, total deposits, total credits (wins), total debits (cash-outs) and an ending balance.

§ 542.8 What are the minimum internal control standards for pull tabs?

(a) *Computer applications.* For any computer application utilized, alternate documentation and/or procedures that provide at least the level of control described by the standards in this section, as approved by the Tribal gaming regulatory authority, will be acceptable.

(b) *Pull tab inventory.* (1) Pull tab inventory (including unused tickets) shall be controlled to assure the integrity of the pull tabs.

(2) Purchased pull tabs shall be inventoried and secured by a person or persons independent of the pull tab sales.

(3) The issue of pull tabs to the cashier or sales location shall be documented and signed for by the person responsible for inventory control and the cashier. The document log shall include the serial number of the pull tabs issued.

(4) Appropriate documentation shall be given to the redemption booth for purposes of determining if the winner purchased the pull tab from the pull tabs issued by the gaming operation. Electronic verification satisfies this requirement.

(5) At the end of each month, a person or persons independent of pull tab sales and inventory control shall verify the accuracy of the ending balance in the pull tab control by reconciling the pull tabs on hand.

(6) A monthly comparison for reasonableness shall be made of the amount of pull tabs sold from the pull tab control log to the amount of revenue recognized.

(c) *Access.* Access to pull tabs shall be restricted to authorized persons.

(d) *Transfers.* Transfers of pull tabs from storage to the sale location shall be secured and independently controlled.

(e) *Winning pull tabs.* (1) Winning pull tabs shall be verified and paid as follows:

(i) Payouts in excess of a dollar amount determined by the gaming operation, as approved by the Tribal gaming regulatory authority, shall be verified by at least two employees.

(ii) Total payout shall be computed and recorded by shift.

(iii) The winning pull tabs shall be voided so that they cannot be presented for payment again.

(2) Personnel independent of pull tab operations shall verify the amount of winning pull tabs redeemed each day.

(f) *Accountability form.* (1) All funds used to operate the pull tab game shall be recorded on an accountability form.

(2) All funds used to operate the pull tab game shall be counted independently by at least two persons and reconciled to the recorded amounts at the end of each shift or session.

(g) *Standards for statistical reports.* (1) Records shall be maintained, which include win, write (sales), and a win-to-write hold percentage as compared to the theoretical hold percentage derived from the flare, for each deal or type of game, for:

(i) Each shift;

(ii) Each day;

(iii) Month-to-date; and

(iv) Year-to-date or fiscal year-to-date as applicable.

(2) A manager independent of the pull tab operations shall review statistical information at least on a monthly basis and shall investigate any large or unusual statistical fluctuations. These investigations shall be documented, maintained for inspection, and provided to the Tribal gaming regulatory authority upon request.

(3) Each month, the actual hold percentage shall be compared to the theoretical hold percentage. Any significant variations (3%) shall be investigated.

(h) *Electronic equipment.* (1) If the gaming operation utilizes electronic equipment in connection with the play of pull tabs, then the following standards shall also apply.

(i) If the electronic equipment contains a bill acceptor, then § 542.21(d) and (e), § 542.31(d) and (e), or § 542.41(d) and (e)(as applicable) shall apply.

(ii) If the electronic equipment uses a bar code or microchip reader, the reader shall be tested periodically to determine that it is correctly reading the bar code or microchip.

(iii) If the electronic equipment returns a voucher or a payment slip to the player, then § 542.13(n)(as applicable) shall apply.

(2) [Reserved]

§ 542.9 What are the minimum internal control standards for card games?

(a) *Computer applications.* For any computer applications utilized, alternate documentation and/or procedures that provide at least the level of control described by the standards in this section, as approved by the Tribal gaming regulatory authority, will be acceptable.

(b) *Standards for drop and count.* The procedures for the collection of the card game drop and the count thereof shall comply with § 542.21, § 542.31, or § 542.41 (as applicable).

(c) *Standards for supervision.* (1) Supervision shall be provided at all times the card room is in operation by personnel with authority equal to or greater than those being supervised.

(2) Exchanges between table banks and the main card room bank (or cage, if a main card room bank is not used) in excess of $100.00 shall be authorized by a supervisor. All exchanges shall be evidenced by the use of a lammer unless the exchange of chips, tokens, and/or cash takes place at the table.

(3) Exchanges from the main card room bank (or cage, if a main card room bank is not used) to the table banks shall be verified by the card room dealer and the runner.

(4) If applicable, transfers between the main card room bank and the cage shall be properly authorized and documented.

(5) A rake collected or ante placed shall be done in accordance with the posted rules.

(d) *Standards for playing cards.* (1) Playing cards shall be maintained in a secure location to prevent unauthorized access and to reduce the possibility of tampering.

(2) Used cards shall be maintained in a secure location until marked, scored, or destroyed, in a manner approved by the Tribal gaming regulatory authority, to prevent unauthorized access and reduce the possibility of tampering.

(3) The Tribal gaming regulatory authority, or the gaming operation as approved by the Tribal gaming regulatory authority, shall establish and the gaming operation shall comply with a reasonable time period, which shall not exceed seven (7) days, within which to mark, cancel, or destroy cards from play.

(i) This standard shall not apply where playing cards are retained for an investigation.

(ii) [Reserved]

(4) A card control log shall be maintained that documents when cards and dice are received on site, distributed to and returned from tables and removed from play by the gaming operation.

(e) *Plastic cards.* Notwithstanding paragraph (d) of this section, if a gaming operation uses plastic cards (not plastic-coated cards), the cards may be used for up to three (3) months if the plastic cards are routinely inspected, and washed or cleaned in a manner and time frame approved by the Tribal gaming regulatory authority.

(f) *Standards for shills.* (1) Issuance of shill funds shall have the written approval of the supervisor.

(2) Shill returns shall be recorded and verified on the shill sign-out form.

(3) The replenishment of shill funds shall be documented.

(g) *Standards for reconciliation of card room bank.* (1) The amount of the main card room bank shall be counted, recorded, and reconciled on at least a per shift basis.

(2) At least once per shift, the table banks that were opened during that shift shall be counted, recorded, and reconciled by a dealer or other person, and a supervisor, and shall be attested to by their signatures on the check-out form.

(h) *Standards for promotional progressive pots and pools.* (1) All funds contributed by players into the pools shall be returned when won in accordance with the posted rules with no commission or administrative fee withheld.

(2) Rules governing promotional pools shall be conspicuously posted and designate:

(i) The amount of funds to be contributed from each pot;

(ii) What type of hand it takes to win the pool (e.g., what constitutes a ''bad beat'');

(iii) How the promotional funds will be paid out;

(iv) How/when the contributed funds are added to the jackpots; and

(v) Amount/percentage of funds allocated to primary and secondary jackpots, if applicable.

(3) Promotional pool contributions shall not be placed in or near the rake circle, in the drop box, or commingled with gaming revenue from card games or any other gambling game.

(4) The amount of the jackpot shall be conspicuously displayed in the card room.

(5) At least once a day, the posted pool amount shall be updated to reflect the current pool amount.

(6) At least once a day, increases to the posted pool amount shall be

reconciled to the cash previously counted or received by the cage by personnel independent of the card room.

(7) All decreases to the pool must be properly documented, including a reason for the decrease.

(i) *Promotional progressive pots and pools where funds are displayed in the card room.* (1) Promotional funds displayed in the card room shall be placed in a locked container in plain view of the public.

(2) Persons authorized to transport the locked container shall be precluded from having access to the contents keys.

(3) The contents key shall be maintained by personnel independent of the card room.

(4) At least once a day, the locked container shall be removed by two persons, one of whom is independent of the card games department, and transported directly to the cage or other secure room to be counted, recorded, and verified.

(5) The locked container shall then be returned to the card room where the posted pool amount shall be updated to reflect the current pool amount.

(j) *Promotional progressive pots and pools where funds are maintained in the cage.* (1) Promotional funds removed from the card game shall be placed in a locked container.

(2) Persons authorized to transport the locked container shall be precluded from having access to the contents keys.

(3) The contents key shall be maintained by personnel independent of the card room.

(4) At least once a day, the locked container shall be removed by two persons, one of whom is independent of the card games department, and transported directly to the cage or other secure room to be counted, recorded, and verified, prior to accepting the funds into cage accountability.

(5) The posted pool amount shall then be updated to reflect the current pool amount.

§ 542.10 What are the minimum internal control standards for keno?

(a) *Computer applications.* For any computer applications utilized, alternate documentation and/or procedures that provide at least the level of control described by the standards in this section, as approved by the Tribal gaming regulatory authority, will be acceptable.

(b) *Game play standards.* (1) The computerized customer ticket shall include the date, game number, ticket sequence number, station number, and conditioning (including multi-race if applicable).

(2) The information on the ticket shall be recorded on a restricted transaction log or computer storage media concurrently with the generation of the ticket.

(3) Keno personnel shall be precluded from having access to the restricted transaction log or computer storage media.

(4) When it is necessary to void a ticket, the void information shall be inputted in the computer and the computer shall document the appropriate information pertaining to the voided wager (e.g., void slip is issued or equivalent documentation is generated).

(5) Controls shall exist to prevent the writing and voiding of tickets after a game has been closed and after the number selection process for that game has begun.

(6) The controls in effect for tickets prepared in outstations (if applicable) shall be identical to those in effect for the primary keno game.

(c) *Rabbit ear or wheel system.* (1) The following standards shall apply if a rabbit ear or wheel system is utilized:

(i) A dedicated camera shall be utilized to monitor the following both prior to, and subsequent to, the calling of a game:

(A) Empty rabbit ears or wheel;

(B) Date and time;

(C) Game number; and

(D) Full rabbit ears or wheel.

(ii) The film of the rabbit ears or wheel shall provide a legible identification of the numbers on the balls drawn.

(iii) Keno personnel shall immediately input the selected numbers in the computer and the computer shall document the date, the game number, the time the game was closed, and the numbers drawn.

(iv) The Tribal gaming regulatory authority, or the gaming operation as approved by the Tribal gaming regulatory authority, shall establish and the gaming operation shall comply with procedures that prevent unauthorized access to keno balls in play.

(v) Back-up keno ball inventories shall be secured in a manner to prevent unauthorized access.

(vi) The Tribal gaming regulatory authority, or the gaming operation as approved by the Tribal gaming regulatory authority, shall establish and the gaming operation shall comply with procedures for inspecting new keno balls put into play as well as for those in use.

(2) [Reserved]

(d) *Random number generator.* (1) The following standards shall apply if a random number generator is utilized:

(i) The random number generator shall be linked to the computer system and shall directly relay the numbers selected into the computer without manual input.

(ii) Keno personnel shall be precluded from access to the random number generator.

(2) [Reserved]

(e) *Winning tickets.* Winning tickets shall be verified and paid as follows:

(1) The sequence number of tickets presented for payment shall be inputted into the computer, and the payment amount generated by the computer shall be given to the customer.

(2) The Tribal gaming regulatory authority, or the gaming operation as approved by the Tribal gaming regulatory authority, shall establish and the gaming operation shall comply with procedures that preclude payment on tickets previously presented for payment, unclaimed winning tickets (sleepers) after a specified period of time, voided tickets, and tickets that have not been issued yet.

(3) All payouts shall be supported by the customer (computer-generated) copy of the winning ticket (payout amount is indicated on the customer ticket or a payment slip is issued).

(4) A manual report or other documentation shall be produced and maintained documenting any payments made on tickets that are not authorized by the computer.

(5) Winning tickets over a specified dollar amount (not to exceed $10,000 for locations with more than $5 million annual keno write and $3,000 for all other locations) shall also require the following:

(i) Approval of management personnel independent of the keno department, evidenced by their signature;

(ii) Review of the video recording and/or digital record of the rabbit ears or wheel to verify the legitimacy of the draw and the accuracy of the draw ticket (for rabbit ear or wheel systems only);

(iii) Comparison of the winning customer copy to the computer reports;

(iv) Regrading of the customer copy using the payout schedule and draw information; and

(v) Documentation and maintenance of the procedures in this paragraph.

(6) When the keno game is operated by one person, all winning tickets in excess of an amount to be determined by management (not to exceed $1,500) shall be reviewed and authorized by a person independent of the keno department.

(f) *Check out standards at the end of each keno shift.* (1) For each writer

station, a cash summary report (count sheet) shall be prepared that includes:

(i) Computation of net cash proceeds for the shift and the cash turned in; and

(ii) Signatures of two employees who have verified the net cash proceeds for the shift and the cash turned in.

(2) [Reserved]

(g) *Promotional payouts or awards.* (1) If a gaming operation offers promotional payouts or awards, the payout form/documentation shall include the following information:

(i) Date and time;

(ii) Dollar amount of payout or description of personal property (e.g., jacket, toaster, car, etc.), including fair market value;

(iii) Type of promotion; and

(iv) Signature of at least one employee authorizing and completing the transaction.

(2) [Reserved]

(h) *Standards for statistical reports.* (1) Records shall be maintained that include win and write by individual writer for each day.

(2) Records shall be maintained that include win, write, and win-to-write hold percentage for:

(i) Each shift;

(ii) Each day;

(iii) Month-to-date; and

(iv) Year-to-date or fiscal year-to-date as applicable.

(3) A manager independent of the keno department shall review keno statistical data at least on a monthly basis and investigate any large or unusual statistical variances.

(4) At a minimum, investigations shall be performed for statistical percentage fluctuations from the base level for a month in excess of ±3%. The base level shall be defined as the gaming operation's win percentage for the previous business year or the previous twelve (12) months.

(5) Such investigations shall be documented, maintained for inspection, and provided to the Tribal gaming regulatory authority upon request.

(i) *System security standards.* (1) All keys (including duplicates) to sensitive computer hardware in the keno area shall be maintained by a department independent of the keno function.

(2) Personnel independent of the keno department shall be required to accompany such keys to the keno area and shall observe changes or repairs each time the sensitive areas are accessed.

(j) *Documentation standards.* (1) Adequate documentation of all pertinent keno information shall be generated by the computer system.

(2) This documentation shall be restricted to authorized personnel.

(3) The documentation shall include, at a minimum:

(i) Ticket information (as described in paragraph (b)(1) of this section);

(ii) Payout information (date, time, ticket number, amount, etc.);

(iii) Game information (number, ball draw, time, etc.);

(iv) Daily recap information, including:

(A) Write;

(B) Payouts; and

(C) Gross revenue (win);

(v) System exception information, including:

(A) Voids;

(B) Late pays; and

(C) Appropriate system parameter information (e.g., changes in pay tables, ball draws, payouts over a predetermined amount, etc.); and

(vi) Personnel access listing, including:

(A) Employee name or employee identification number; and

(B) Listing of functions employee can perform or equivalent means of identifying same.

(k) *Keno audit standards.* (1) The keno audit function shall be independent of the keno department.

(2) At least annually, keno audit shall foot the write on the restricted copy of the keno transaction report for a minimum of one shift and compare the total to the total as documented by the computer.

(3) For at least one shift every other month, keno audit shall perform the following:

(i) Foot the customer copy of the payouts and trace the total to the payout report; and

(ii) Regrade at least 1% of the winning tickets using the payout schedule and draw ticket.

(4) Keno audit shall perform the following:

(i) For a minimum of five games per week, compare the video recording and/or digital record of the rabbit ears or wheel to the computer transaction summary;

(ii) Compare net cash proceeds to the audited win/loss by shift and investigate any large cash overages or shortages (*i.e.,* in excess of $25.00);

(iii) Review and regrade all winning tickets greater than or equal to $1,500, including all forms that document that proper authorizations and verifications were obtained and performed;

(iv) Review the documentation for payout adjustments made outside the computer and investigate large and frequent payments;

(v) Review personnel access listing for inappropriate functions an employee can perform;

(vi) Review system exception information on a daily basis for propriety of transactions and unusual occurrences including changes to the personnel access listing;

(vii) If a random number generator is used, then at least weekly review the numerical frequency distribution for potential patterns; and

(viii) Investigate and document results of all noted improper transactions or unusual occurrences.

(5) When the keno game is operated by one person:

(i) The customer copies of all winning tickets in excess of $100 and at least 5% of all other winning tickets shall be regraded and traced to the computer payout report;

(ii) The video recording and/or digital record of rabbit ears or wheel shall be randomly compared to the computer game information report for at least 10% of the games during the shift; and

(iii) Keno audit personnel shall review winning tickets for proper authorization pursuant to paragraph (e)(6) of this section.

(6) In the event any person performs the writer and deskman functions on the same shift, the procedures described in paragraphs (k)(5)(i) and (ii) of this section (using the sample sizes indicated) shall be performed on tickets written by that person.

(7) Documentation (e.g., a log, checklist, etc.) that evidences the performance of all keno audit procedures shall be maintained.

(8) A manager independent of the keno department shall review keno audit exceptions, and perform and document investigations into unresolved exceptions. These investigations shall be documented, maintained for inspection, and provided to the Tribal gaming regulatory authority upon request.

(9) When a multi-game ticket is part of the sample in paragraphs (k)(3)(ii), (k)(5)(i) and (k)(6) of this section, the procedures may be performed for ten (10) games or ten percent (10%) of the games won, whichever is greater.

(l) *Access.* Access to the computer system shall be adequately restricted (i.e., passwords are changed at least quarterly, access to computer hardware is physically restricted, etc.).

(m) *Equipment standards.* (1) There shall be effective maintenance planned to service keno equipment, including computer program updates, hardware servicing, and keno ball selection equipment (e.g., service contract with lessor).

(2) Keno equipment maintenance (excluding keno balls) shall be

independent of the operation of the keno game.

(3) Keno maintenance personnel shall report irregularities to management personnel independent of the keno department.

(4) If the gaming operation utilizes a barcode or microchip reader in connection with the play of keno, the reader shall be tested at least annually by personnel independent of the keno department to determine that it is correctly reading the barcode or microchip.

(n) *Document retention.* (1) All documents (including computer storage media) discussed in this section shall be retained for five (5) years, except for the following, which shall be retained for at least seven (7) days:

(i) Video recordings and/or digital records of rabbit ears or wheel;

(ii) All copies of winning keno tickets of less than $1,500.00.

(2) [Reserved]

(o) *Multi-race tickets.* (1) Procedures shall be established to notify keno personnel immediately of large multi-race winners to ensure compliance with standards in paragraph (e)(5) of this section.

(2) Procedures shall be established to ensure that keno personnel are aware of multi-race tickets still in process at the end of a shift.

(p) *Manual keno.* For gaming operations that conduct manual keno games, alternate procedures that provide at least the level of control described by the standards in this section shall be developed and implemented.

§ 542.11 What are the minimum internal control standards for pari-mutuel wagering?

(a) *Exemptions.* (1) The requirements of this section shall not apply to gaming operations who house pari-mutuel wagering operations conducted entirely by a state licensed simulcast service provider pursuant to an approved tribal-state compact if:

(i) The simulcast service provider utilizes its own employees for all aspects of the pari-mutuel wagering operation;

(ii) The gaming operation posts, in a location visible to the public, that the simulcast service provider and its employees are wholly responsible for the conduct of pari-mutuel wagering offered at that location;

(iii) The gaming operation receives a predetermined fee from the simulcast service provider; and

(iv) In addition, the Tribal gaming regulatory authority, or the gaming operation as approved by the Tribal gaming regulatory authority, shall establish and the gaming operation shall comply with standards that ensure that the gaming operation receives, from the racetrack, its contractually guaranteed percentage of the handle.

(2) Gaming operations that contract directly with a state regulated racetrack as a simulcast service provider, but whose on-site pari-mutuel operations are conducted wholly or in part by tribal gaming operation employees, shall not be required to comply with paragraphs (h)(5) thru (h)(9) of this section.

(i) If any standard contained within this section conflicts with state law, a tribal-state compact, or a contract, then the gaming operation shall document the basis for noncompliance and shall maintain such documentation for inspection by the Tribal gaming regulatory authority and the Commission.

(ii) In addition, the Tribal gaming regulatory authority, or the gaming operation as approved by the Tribal gaming regulatory authority, shall establish and the gaming operation shall comply with standards that ensure that the gaming operation receives, from the racetrack, its contractually guaranteed percentage of the handle.

(b) *Computer applications.* For any computer applications utilized, alternate documentation and/or procedures that provide at least the level of control described by the standards in this section, as approved by the Tribal gaming regulatory authority, will be acceptable.

(c) *Betting ticket and equipment standards.* (1) All pari-mutuel wagers shall be transacted through the pari-mutuel satellite system. In case of computer failure between the pari-mutuel book and the hub, no tickets shall be manually written.

(2) Whenever a betting station is opened for wagering or turned over to a new writer/cashier, the writer/cashier shall sign on and the computer shall document gaming operation name (or identification number), station number, the writer/cashier identifier, and the date and time.

(3) A betting ticket shall consist of at least two parts:

(i) An original, which shall be transacted and issued through a printer and given to the customer; and

(ii) A copy that shall be recorded concurrently with the generation of the original ticket either on paper or other storage media (e.g., tape or diskette).

(4) Upon accepting a wager, the betting ticket that is created shall contain the following:

(i) A unique transaction identifier;

(ii) Gaming operation name (or identification number) and station number;

(iii) Race track, race number, horse identification or event identification, as applicable;

(iv) Type of bet(s), each bet amount, total number of bets, and total take; and

(v) Date and time.

(5) All tickets shall be considered final at post time.

(6) If a gaming operation voids a betting ticket written prior to post time, it shall be immediately entered into the system.

(7) Future wagers shall be accepted and processed in the same manner as regular wagers.

(d) *Payout standards.* (1) Prior to making payment on a ticket, the writer/cashier shall input the ticket for verification and payment authorization.

(2) The computer shall be incapable of authorizing payment on a ticket that has been previously paid, a voided ticket, a losing ticket, or an unissued ticket.

(e) *Checkout standards.* (1) Whenever the betting station is closed or the writer/cashier is replaced, the writer/cashier shall sign off and the computer shall document the gaming operation name (or identification number), station number, the writer/cashier identifier, the date and time, and cash balance.

(2) For each writer/cashier station a summary report shall be completed at the conclusion of each shift including:

(i) Computation of cash turned in for the shift; and

(ii) Signatures of two employees who have verified the cash turned in for the shift.

(f) *Employee wagering.* Pari-mutuel employees shall be prohibited from wagering on race events while on duty, including during break periods.

(g) *Computer reports standards.* (1) Adequate documentation of all pertinent pari-mutuel information shall be generated by the computer system.

(2) This documentation shall be restricted to authorized personnel.

(3) The documentation shall be created for each day's operation and shall include, but is not limited to:

(i) Unique transaction identifier;

(ii) Date/time of transaction;

(iii) Type of wager;

(iv) Animal identification or event identification;

(v) Amount of wagers (by ticket, writer/SAM, track/event, and total);

(vi) Amount of payouts (by ticket, writer/SAM, track/event, and total);

(vii) Tickets refunded (by ticket, writer, track/event, and total);

(viii) Unpaid winners/vouchers (''outs'') (by ticket/voucher, track/event, and total);

(ix) Voucher sales/payments (by ticket, writer/SAM, and track/event);

(x) Voids (by ticket, writer, and total);

(xi) Future wagers (by ticket, date of event, total by day, and total at the time of revenue recognition);

(xii) Results (winners and payout data);

(xiii) Breakage data (by race and track/event);

(xiv) Commission data (by race and track/event); and

(xv) Purged data (by ticket and total).

(4) The system shall generate the following reports:

(i) A reconciliation report that summarizes totals by track/event, including write, the day's winning ticket total, total commission and breakage due the gaming operation, and net funds transferred to or from the gaming operation's bank account;

(ii) An exception report that contains a listing of all system functions and overrides not involved in the actual writing or cashing of tickets, including sign-on/off, voids, and manually input paid tickets; and

(iii) A purged ticket report that contains a listing of the unique transaction identifier(s), description, ticket cost and value, and date purged.

(h) *Accounting and auditing functions.* A gaming operation shall perform the following accounting and auditing functions:

(1) The parimutuel audit shall be conducted by personnel independent of the parimutuel operation.

(2) Documentation shall be maintained evidencing the performance of all parimutuel accounting and auditing procedures.

(3) An accounting employee shall review handle, commission, and breakage for each day's play and recalculate the net amount due to or from the systems operator on a weekly basis.

(4) The accounting employee shall verify actual cash/cash equivalents turned in to the system's summary report for each cashier's drawer (Beginning balance, (+) fills (draws), (+) net write (sold less voids), (−) payouts (net of IRS withholding), (−) cashbacks (paids), (=) cash turn-in).

(5) An accounting employee shall produce a gross revenue recap report to calculate gross revenue for each day's play and for a month-to-date basis, including the following totals:

(i) Commission;

(ii) Positive breakage;

(iii) Negative breakage;

(iv) Track/event fees;

(v) Track/event fee rebates; and

(vi) Purged tickets.

(6) All winning tickets and vouchers shall be physically removed from the SAM's for each day's play.

(7) In the event a SAM does not balance for a day's play, the auditor shall perform the following procedures:

(i) Foot the winning tickets and vouchers deposited and trace to the totals of SAM activity produced by the system;

(ii) Foot the listing of cashed vouchers and trace to the totals produced by the system;

(iii) Review all exceptions for propriety of transactions and unusual occurrences;

(iv) Review all voids for propriety;

(v) Verify the results as produced by the system to the results provided by an independent source;

(vi) Regrade 1% of paid (cashed) tickets to ensure accuracy and propriety; and

(vii) When applicable, reconcile the totals of future tickets written to the totals produced by the system for both earned and unearned take, and review the reports to ascertain that future wagers are properly included on the day of the event.

(8) At least annually, the auditor shall foot the wagers for one day and trace to the total produced by the system.

(9) At least one day per quarter, the auditor shall recalculate and verify the change in the unpaid winners to the total purged tickets.

§ 542.12 What are the minimum internal control standards for table games?

(a) *Computer applications.* For any computer applications utilized, alternate documentation and/or procedures that provide at least the level of control described by the standards in this section, as approved by the Tribal gaming regulatory authority, will be acceptable.

(b) *Standards for drop and count.* The procedures for the collection of the table game drop and the count thereof shall comply with § 542.21, § 542.31, or § 542.41 (as applicable).

(c) *Fill and credit standards.* (1) Fill slips and credit slips shall be in at least triplicate form, and in a continuous, prenumbered series. Such slips shall be concurrently numbered in a form utilizing the alphabet and only in one series at a time. The alphabet need not be used if the numerical series is not repeated during the business year.

(2) Unissued and issued fill/credit slips shall be safeguarded and adequate procedures shall be employed in their distribution, use, and control. Personnel from the cashier or pit departments shall have no access to the secured (control) copies of the fill/credit slips.

(3) When a fill/credit slip is voided, the cashier shall clearly mark ''void'' across the face of the original and first copy, the cashier and one other person independent of the transactions shall sign both the original and first copy, and shall submit them to the accounting department for retention and accountability.

(4) Fill transactions shall be authorized by pit supervisory personnel before the issuance of fill slips and transfer of chips, tokens, or cash equivalents. The fill request shall be communicated to the cage where the fill slip is prepared.

(5) At least three parts of each fill slip shall be utilized as follows:

(i) One part shall be transported to the pit with the fill and, after the appropriate signatures are obtained, deposited in the table game drop box;

(ii) One part shall be retained in the cage for reconciliation of the cashier bank; and

(iii) For computer systems, one part shall be retained in a secure manner to insure that only authorized persons may gain access to it. For manual systems, one part shall be retained in a secure manner in a continuous unbroken form.

(6) For Tier C gaming operations, the part of the fill slip that is placed in the table game drop box shall be of a different color for fills than for credits, unless the type of transaction is clearly distinguishable in another manner (the checking of a box on the form shall not be a clearly distinguishable indicator).

(7) The table number, shift, and amount of fill by denomination and in total shall be noted on all copies of the fill slip. The correct date and time shall be indicated on at least two copies.

(8) All fills shall be carried from the cashier's cage by a person who is independent of the cage or pit.

(9) The fill slip shall be signed by at least the following persons (as an indication that each has counted the amount of the fill and the amount agrees with the fill slip):

(i) Cashier who prepared the fill slip and issued the chips, tokens, or cash equivalent;

(ii) Runner who carried the chips, tokens, or cash equivalents from the cage to the pit;

(iii) Dealer or boxperson who received the chips, tokens, or cash equivalents at the gaming table; and

(iv) Pit supervisory personnel who supervised the fill transaction.

(10) Fills shall be broken down and verified by the dealer or boxperson in public view before the dealer or boxperson places the fill in the table tray.

(11) A copy of the fill slip shall then be deposited into the drop box on the table by the dealer, where it shall appear in the soft count room with the cash receipts for the shift.

(12) Table credit transactions shall be authorized by a pit supervisor before the issuance of credit slips and transfer of chips, tokens, or other cash equivalent. The credit request shall be communicated to the cage where the credit slip is prepared.

(13) At least three parts of each credit slip shall be utilized as follows:

(i) Two parts of the credit slip shall be transported by the runner to the pit. After signatures of the runner, dealer, and pit supervisor are obtained, one copy shall be deposited in the table game drop box and the original shall accompany transport of the chips, tokens, markers, or cash equivalents from the pit to the cage for verification and signature of the cashier.

(ii) For computer systems, one part shall be retained in a secure manner to insure that only authorized persons may gain access to it. For manual systems, one part shall be retained in a secure manner in a continuous unbroken form.

(14) The table number, shift, and the amount of credit by denomination and in total shall be noted on all copies of the credit slip. The correct date and time shall be indicated on at least two copies.

(15) Chips, tokens, and/or cash equivalents shall be removed from the table tray by the dealer or boxperson and shall be broken down and verified by the dealer or boxperson in public view prior to placing them in racks for transfer to the cage.

(16) All chips, tokens, and cash equivalents removed from the tables and markers removed from the pit shall be carried to the cashier's cage by a person who is independent of the cage or pit.

(17) The credit slip shall be signed by at least the following persons (as an indication that each has counted or, in the case of markers, reviewed the items transferred):

(i) Cashier who received the items transferred from the pit and prepared the credit slip;

(ii) Runner who carried the items transferred from the pit to the cage;

(iii) Dealer who had custody of the items prior to transfer to the cage; and

(iv) Pit supervisory personnel who supervised the credit transaction.

(18) The credit slip shall be inserted in the drop box by the dealer.

(19) Chips, tokens, or other cash equivalents shall be deposited on or removed from gaming tables only when accompanied by the appropriate fill/credit or marker transfer forms.

(20) Cross fills (the transfer of chips between table games) and even cash exchanges are prohibited in the pit.

(d) *Table inventory forms.* (1) At the close of each shift, for those table banks that were opened during that shift:

(i) The table's chip, token, coin, and marker inventory shall be counted and recorded on a table inventory form; or

(ii) If the table banks are maintained on an imprest basis, a final fill or credit shall be made to bring the bank back to par.

(2) If final fills are not made, beginning and ending inventories shall be recorded on the master game sheet for shift win calculation purposes.

(3) The accuracy of inventory forms prepared at shift end shall be verified by the outgoing pit supervisor and the dealer. Alternatively, if the dealer is not available, such verification may be provided by another pit supervisor or another supervisor from another gaming department. Verifications shall be evidenced by signature on the inventory form.

(4) If inventory forms are placed in the drop box, such action shall be performed by a person other than a pit supervisor.

(e) *Table games computer generated documentation standards.* (1) The computer system shall be capable of generating adequate documentation of all information recorded on the source documents and transaction detail (e.g., fill/credit slips, markers, etc.).

(2) This documentation shall be restricted to authorized personnel.

(3) The documentation shall include, at a minimum:

(i) System exception information (*e.g.,* appropriate system parameter information, corrections, voids, etc.); and

(ii) Personnel access listing, which includes, at a minimum:

(A) Employee name or employee identification number (if applicable); and

(B) Listing of functions employees can perform or equivalent means of identifying the same.

(f) *Standards for playing cards and dice.* (1) Playing cards and dice shall be maintained in a secure location to prevent unauthorized access and to reduce the possibility of tampering.

(2) Used cards and dice shall be maintained in a secure location until marked, scored, or destroyed, in a manner as approved by the Tribal gaming regulatory authority, to prevent unauthorized access and reduce the possibility of tampering.

(3) The Tribal gaming regulatory authority, or the gaming operation as approved by the Tribal gaming regulatory authority, shall establish and the gaming operation shall comply with a reasonable time period, which shall not exceed seven (7) days, within which to mark, cancel, or destroy cards and dice from play.

(i) This standard shall not apply where playing cards or dice are retained for an investigation.

(ii) [Reserved]

(4) A card control log shall be maintained that documents when cards and dice are received on site, distributed to and returned from tables and removed from play by the gaming operation.

(g) *Plastic cards.* Notwithstanding paragraph (f) of this section, if a gaming operation uses plastic cards (not plastic-coated cards), the cards may be used for up to three (3) months if the plastic cards are routinely inspected, and washed or cleaned in a manner and time frame approved by the Tribal gaming regulatory authority.

(h) *Standards for supervision.* Pit supervisory personnel (with authority equal to or greater than those being supervised) shall provide supervision of all table games.

(i) *Analysis of table game performance standards.* (1) Records shall be maintained by day and shift indicating any single-deck blackjack games that were dealt for an entire shift.

(2) Records reflecting hold percentage by table and type of game shall be maintained by shift, by day, cumulative month-to-date, and cumulative year-to-date.

(3) This information shall be presented to and reviewed by management independent of the pit department on at least a monthly basis.

(4) The management in paragraph (h)(3) of this section shall investigate any unusual fluctuations in hold percentage with pit supervisory personnel.

(5) The results of such investigations shall be documented, maintained for inspection, and provided to the Tribal gaming regulatory authority upon request.

(j) *Accounting/auditing standards.* (1) The accounting and auditing procedures shall be performed by personnel who are independent of the transactions being audited/accounted for.

(2) If a table game has the capability to determine drop (*e.g.,* bill-in/coin-drop meters, bill acceptor, computerized record, etc.) the dollar amount of the drop shall be reconciled to the actual drop by shift.

(3) Accounting/auditing employees shall review exception reports for all computerized table games systems at

least monthly for propriety of transactions and unusual occurrences.

(4) All noted improper transactions or unusual occurrences shall be investigated with the results documented.

(5) Evidence of table games auditing procedures and any follow-up performed shall be documented, maintained for inspection, and provided to the Tribal gaming regulatory authority upon request.

(6) A daily recap shall be prepared for the day and month-to-date, which shall include the following information:

(i) Drop;

(ii) Win; and

(iii) Gross revenue.

(k) *Marker credit play.* (1) If a gaming operation allows marker credit play (exclusive of rim credit and call bets), the following standards shall apply:

(i) A marker system shall allow for credit to be both issued and repaid in the pit.

(ii) Prior to the issuance of gaming credit to a player, the employee extending the credit shall contact the cashier or other independent source to determine if the player's credit limit has been properly established and there is sufficient remaining credit available for the advance.

(iii) Proper authorization of credit extension in excess of the previously established limit shall be documented.

(iv) The amount of credit extended shall be communicated to the cage or another independent source and the amount documented within a reasonable time subsequent to each issuance.

(v) The marker form shall be prepared in at least triplicate form (triplicate form being defined as three parts performing the functions delineated in the standard in paragraph (j)(1)(vi) of this section), with a preprinted or concurrently-printed marker number, and utilized in numerical sequence. (This requirement shall not preclude the distribution of batches of markers to various pits.)

(vi) At least three parts of each separately numbered marker form shall be utilized as follows:

(A) Original shall be maintained in the pit until settled or transferred to the cage;

(B) Payment slip shall be maintained in the pit until the marker is settled or transferred to the cage. If paid in the pit, the slip shall be inserted in the table game drop box. If not paid in the pit, the slip shall be transferred to the cage with the original;

(C) Issue slip shall be inserted into the appropriate table game drop box when credit is extended or when the player has signed the original.

(vii) When marker documentation (e.g., issue slip and payment slip) is inserted in the drop box, such action shall be performed by the dealer or boxperson at the table.

(viii) A record shall be maintained that details the following (e.g., master credit record retained at the pit podium):

(A) The signature or initials of the person(s) approving the extension of credit (unless such information is contained elsewhere for each issuance);

(B) The legible name of the person receiving the credit;

(C) The date and shift of granting the credit;

(D) The table on which the credit was extended;

(E) The amount of credit issued;

(F) The marker number;

(G) The amount of credit remaining after each issuance or the total credit available for all issuances;

(H) The amount of payment received and nature of settlement (e.g., credit slip number, cash, chips, etc.); and

(I) The signature or initials of the person receiving payment/settlement.

(ix) The forms required in paragraphs (j)(1)(v), (vi), and (viii) of this section shall be safeguarded, and adequate procedures shall be employed to control the distribution, use, and access to these forms.

(x) All credit extensions shall be initially evidenced by lammer buttons, which shall be displayed on the table in public view and placed there by supervisory personnel.

(xi) Marker preparation shall be initiated and other records updated within approximately one hand of play following the initial issuance of credit to the player.

(xii) Lammer buttons shall be removed only by the dealer or boxperson employed at the table upon completion of a marker transaction.

(xiii) The original marker shall contain at least the following information:

(A) Marker number;

(B) Player's name and signature;

(C) Date; and

(D) Amount of credit issued.

(xiv) The issue slip or stub shall include the same marker number as the original, the table number, date and time of issuance, and amount of credit issued. The issue slip or stub shall also include the signature of the person extending the credit, and the signature or initials of the dealer or boxperson at the applicable table, unless this information is included on another document verifying the issued marker.

(xv) The payment slip shall include the same marker number as the original. When the marker is paid in full in the pit, it shall also include the table number where paid, date and time of payment, nature of settlement (cash, chips, etc.), and amount of payment. The payment slip shall also include the signature of pit supervisory personnel acknowledging payment, and the signature or initials of the dealer or boxperson receiving payment, unless this information is included on another document verifying the payment of the marker.

(xvi) When partial payments are made in the pit, a new marker shall be completed reflecting the remaining balance and the marker number of the marker originally issued.

(xvii) When partial payments are made in the pit, the payment slip of the marker that was originally issued shall be properly cross-referenced to the new marker number, completed with all information required by paragraph (j)(1)(xv) of this section, and inserted into the drop box.

(xviii) The cashier's cage or another independent source shall be notified when payments (full or partial) are made in the pit so that cage records can be updated for such transactions. Notification shall be made no later than when the customer's play is completed or at shift end, whichever is earlier.

(xix) All portions of markers, both issued and unissued, shall be safeguarded and procedures shall be employed to control the distribution, use and access to the forms.

(xx) An investigation shall be performed to determine the cause and responsibility for loss whenever marker forms, or any part thereof, are missing. These investigations shall be documented, maintained for inspection, and provided to the Tribal gaming regulatory authority upon request.

(xxi) When markers are transferred to the cage, marker transfer forms or marker credit slips (or similar documentation) shall be utilized and such documents shall include, at a minimum, the date, time, shift, marker number(s), table number(s), amount of each marker, the total amount transferred, signature of pit supervisory personnel releasing instruments from the pit, and the signature of cashier verifying receipt of instruments at the cage.

(xxii) All markers shall be transferred to the cage within twenty-four (24) hours of issuance.

(xxiii) Markers shall be transported to the cashier's cage by a person who is independent of the marker issuance and payment functions (pit clerks may perform this function).

(2) [Reserved]

(l) *Name credit instruments accepted in the pit.* (1) For the purposes of this paragraph, name credit instruments means personal checks, payroll checks, counter checks, hold checks, traveler's checks, or other similar instruments that are accepted in the pit as a form of credit issuance to a player with an approved credit limit.

(2) The following standards shall apply if name credit instruments are accepted in the pit:

(i) A name credit system shall allow for the issuance of credit without using markers;

(ii) Prior to accepting a name credit instrument, the employee extending the credit shall contact the cashier or another independent source to determine if the player's credit limit has been properly established and the remaining credit available is sufficient for the advance;

(iii) All name credit instruments shall be transferred to the cashier's cage (utilizing a two-part order for credit) immediately following the acceptance of the instrument and issuance of chips (if name credit instruments are transported accompanied by a credit slip, an order for credit is not required);

(iv) The order for credit (if applicable) and the credit slip shall include the customer's name, amount of the credit instrument, the date, time, shift, table number, signature of pit supervisory personnel releasing instrument from pit, and the signature of the cashier verifying receipt of instrument at the cage;

(v) The procedures for transacting table credits at standards in paragraphs (c)(12) through (19) of this section shall be strictly adhered to; and

(vi) The acceptance of payments in the pit for name credit instruments shall be prohibited.

(m) *Call bets.* (1) The following standards shall apply if call bets are accepted in the pit:

(i) A call bet shall be evidenced by the placement of a lammer button, chips, or other identifiable designation in an amount equal to that of the wager in a specific location on the table;

(ii) The placement of the lammer button, chips, or other identifiable designation shall be performed by supervisory/boxperson personnel. The placement may be performed by a dealer only if the supervisor physically observes and gives specific authorization;

(iii) The call bet shall be settled at the end of each hand of play by the preparation of a marker, repayment of the credit extended, or the payoff of the winning wager. Call bets extending beyond one hand of play shall be prohibited; and

(iv) The removal of the lammer button, chips, or other identifiable designation shall be performed by the dealer/ boxperson upon completion of the call bet transaction.

(2) [Reserved]

(n) *Rim credit.* (1) The following standards shall apply if rim credit is extended in the pit:

(i) Rim credit shall be evidenced by the issuance of chips to be placed in a neutral zone on the table and then extended to the customer for the customer to wager, or to the dealer to wager for the customer, and by the placement of a lammer button or other identifiable designation in an amount equal to that of the chips extended; and

(ii) Rim credit shall be recorded on player cards, or similarly used documents, which shall be:

(A) Prenumbered or concurrently numbered and accounted for by a department independent of the pit;

(B) For all extensions and subsequent repayments, evidenced by the initials or signatures of a supervisor and the dealer attesting to the validity of each credit extension and repayment;

(C) An indication of the settlement method (e.g., serial number of marker issued, chips, cash);

(D) Settled no later than when the customer leaves the table at which the card is prepared;

(E) Transferred to the accounting department on a daily basis; and

(F) Reconciled with other forms utilized to control the issuance of pit credit (e.g., master credit records, table cards).

(2) [Reserved]

(o) *Foreign currency.* (l) The following standards shall apply if foreign currency is accepted in the pit:

(i) Foreign currency transactions shall be authorized by a pit supervisor/ boxperson who completes a foreign currency exchange form before the exchange for chips or tokens;

(ii) Foreign currency exchange forms include the country of origin, total face value, amount of chips/token extended (*i.e.,* conversion amount), signature of supervisor/boxperson, and the dealer completing the transaction;

(iii) Foreign currency exchange forms and the foreign currency shall be inserted in the drop box by the dealer; and

(iv) Alternate procedures specific to the use of foreign valued gaming chips shall be developed by the Tribal gaming regulatory authority, or the gaming operation as approved by the Tribal gaming regulatory authority.

(2) [Reserved]

§ 542.13 What are the minimum internal control standards for gaming machines?

(a) *Standards for gaming machines.*

(1) For this section only, credit or customer credit means a unit of value equivalent to cash or cash equivalents deposited, wagered, won, lost, or redeemed by a customer.

(2) Coins shall include tokens.

(3) For all computerized gaming machine systems, a personnel access listing shall be maintained, which includes at a minimum:

(i) Employee name or employee identification number (or equivalent); and

(ii) Listing of functions employee can perform or equivalent means of identifying same.

(b) *Computer applications.* For any computer applications utilized, alternate documentation and/or procedures that provide at least the level of control described by the standards in this section, as approved by the Tribal gaming regulatory authority, will be acceptable.

(c) *Standards for drop and count.* The procedures for the collection of the gaming machine drop and the count thereof shall comply with § 542.21, § 542.31, or § 542.41 (as applicable).

(d) *Jackpot payouts, gaming machines fills, short pays and accumulated credit payouts standards.* (1) For jackpot payouts and gaming machine fills, documentation shall include the following information:

(i) Date and time;

(ii) Machine number;

(iii) Dollar amount of cash payout or gaming machine fill (both alpha and numeric) or description of personal property awarded, including fair market value. Alpha is optional if another unalterable method is used for evidencing the amount of the payout;

(iv) Game outcome (including reel symbols, card values, suits, etc.) for jackpot payouts. Game outcome is not required if a computerized jackpot/fill system is used;

(v) Preprinted or concurrently printed sequential number; and

(vi) Signatures of at least two employees verifying and witnessing the payout or gaming machine fill (except as otherwise provided in paragraphs (d)(1)(vi)(A), (B), and (C) of this section).

(A) Jackpot payouts over a predetermined amount shall require the signature and verification of a supervisory or management employee independent of the gaming machine department (in addition to the two signatures required in paragraph (d)(1)(vi) of this section). Alternatively, if an on-line accounting system is utilized, only two signatures are

required: one employee and one supervisory or management employee independent of the gaming machine department. This predetermined amount shall be authorized by management (as approved by the Tribal gaming regulatory authority), documented, and maintained.

(B) With regard to jackpot payouts and hopper fills, the signature of one employee is sufficient if an on-line accounting system is utilized and the jackpot or fill is less than $1,200.

(C) On graveyard shifts (eight-hour maximum) payouts/fills less than $100 can be made without the payout/fill being witnessed by a second person.

(2) For short pays of $10.00 or more, and payouts required for accumulated credits, the payout form shall include the following information:

(i) Date and time;

(ii) Machine number;

(iii) Dollar amount of payout (both alpha and numeric); and

(iv) The signature of at least one (1) employee verifying and witnessing the payout.

(A) Where the payout amount is $50 or more, signatures of at least two (2) employees verifying and witnessing the payout. Alternatively, the signature of one (1) employee is sufficient if an on-line accounting system is utilized and the payout amount is less than $3,000.

(B) [Reserved]

(3) Computerized jackpot/fill systems shall be restricted so as to prevent unauthorized access and fraudulent payouts by one person as required by § 542.16(a).

(4) Payout forms shall be controlled and routed in a manner that precludes any one person from producing a fraudulent payout by forging signatures or by altering the amount paid out subsequent to the payout and misappropriating the funds.

(e) *Promotional payouts or awards.* (1) If a gaming operation offers promotional payouts or awards that are not reflected on the gaming machine pay table, then the payout form/documentation shall include:

(i) Date and time;

(ii) Machine number and denomination;

(iii) Dollar amount of payout or description of personal property (*e.g.*, jacket, toaster, car, etc.), including fair market value;

(iv) Type of promotion (*e.g.*, double jackpots, four-of-a-kind bonus, etc.); and

(v) Signature of at least one employee authorizing and completing the transaction.

(2) [Reserved]

(f) *Gaming machine department funds standards.* (1) The gaming machine booths and change banks that are active during the shift, shall be counted down and reconciled each shift utilizing appropriate accountability documentation.

(2) The wrapping of loose gaming machine booth and cage cashier coin shall be performed at a time or location that does not interfere with the hard count/wrap process or the accountability of that process.

(3) A record shall be maintained evidencing the transfers of wrapped and unwrapped coins and retained for seven (7) days.

(g) *EPROM control standards.* (1) At least annually, procedures shall be performed to insure the integrity of a sample of gaming machine game program EPROMs, or other equivalent game software media, by personnel independent of the gaming machine department or the machines being tested.

(2) The Tribal gaming regulatory authority, or the gaming operation subject to the approval of the Tribal gaming regulatory authority, shall develop and implement procedures for the following:

(i) Removal of EPROMs, or other equivalent game software media, from devices, the verification of the existence of errors as applicable, and the correction via duplication from the master game program EPROM, or other equivalent game software media;

(ii) Copying one gaming device program to another approved program;

(iii) Verification of duplicated EPROMs before being offered for play;

(iv) Receipt and destruction of EPROMs, or other equivalent game software media; and

(v) Securing the EPROM, or other equivalent game software media, duplicator, and master game EPROMs, or other equivalent game software media, from unrestricted access.

(3) The master game program number, par percentage, and the pay table shall be verified to the par sheet when initially received from the manufacturer.

(4) Gaming machines with potential jackpots in excess of $100,000 shall have the game software circuit boards locked or physically sealed. The lock or seal shall necessitate the presence of a person independent of the gaming machine department to access the device game program EPROM, or other equivalent game software media. If a seal is used to secure the board to the frame of the gaming device, it shall be pre-numbered.

(5) Records that document the procedures in paragraph (g)(2)(i) of this section shall include the following information:

(i) Date;

(ii) Machine number (source and destination);

(iii) Manufacturer;

(iv) Program number;

(v) Personnel involved;

(vi) Reason for duplication;

(vii) Disposition of any permanently removed EPROM, or other equivalent game software media;

(viii) Seal numbers, if applicable; and

(ix) Approved testing lab approval numbers, if available.

(6) EPROMS, or other equivalent game software media, returned to gaming devices shall be labeled with the program number. Supporting documentation shall include the date, program number, information identical to that shown on the manufacturer's label, and initials of the person replacing the EPROM, or other equivalent game software media.

(h) *Standards for evaluating theoretical and actual hold percentages.* (1) Accurate and current theoretical hold worksheets shall be maintained for each gaming machine.

(2) For those gaming machines or groups of identical machines (excluding multi-game machines) with differences in theoretical payback percentage exceeding a 4% spread between the minimum and maximum theoretical payback, an employee or department independent from the gaming machine department shall perform a weighted average calculation to periodically adjust theoretical as follows:

(i) On a quarterly basis, record the meters that contain the number of plays by wager (*i.e.,* one coin, two coins, etc.);

(ii) On an annual basis, calculate the theoretical hold percentage based on the distribution of plays by wager type;

(iii) On an annual basis, adjust the machine(s) theoretical hold percentage in the gaming machine statistical report to reflect this revised percentage; and

(iv) The adjusted theoretical hold percentage shall be within the spread between the minimum and maximum theoretical payback percentages.

(3) For those gaming operations that are unable to perform the weighted average calculation as required by paragraph (h)(2) of this section, the following procedures shall apply:

(i) On at least an annual basis, calculate the actual hold percentage for each aming machine;

(ii) On at least an annual basis, adjust the theoretical hold percentage in the gaming machine statistical report for each gaming machine to the previously calculated actual hold percentage; and

(iii) The adjusted theoretical hold percentage shall be within the spread

between the minimum and maximum theoretical payback percentages.

(4) For multi-game machines with a four percent (4%) or greater spread between minimum and maximum theoretical payback percentages, an employee or department independent of the gaming machine department shall:

(i) Weekly, record the total coin-in meter;

(ii) Quarterly, record the coin-in meters for each game contained in the machine; and

(iii) On an annual basis, adjust the theoretical hold percentage in the gaming machine statistical report to a weighted average based upon the ratio of coin-in for each game.

(5) The adjusted theoretical hold percentage for multi-game machines may be combined for machines with exactly the same game mix throughout the year.

(6) The theoretical hold percentages used in the gaming machine analysis reports should be within the performance standards set by the manufacturer.

(7) Records shall be maintained for each machine indicating the dates and type of changes made and the recalculation of theoretical hold as a result of the changes.

(8) Records shall be maintained for each machine that indicate the date the machine was placed into service, the date the machine was removed from operation, the date the machine was placed back into operation, and any changes in machine numbers and designations.

(9) All of the gaming machines shall contain functioning meters that shall record coin-in or credit-in, or on-line gaming machine monitoring system that captures similar data.

(10) All gaming machines with bill acceptors shall contain functioning bill-in meters that record the dollar amounts or number of bills accepted by denomination.

(11) Gaming machine in-meter readings shall be recorded at least weekly (monthly for Tier A and Tier B gaming operations) immediately prior to or subsequent to a gaming machine drop. On-line gaming machine monitoring systems can satisfy this requirement. However, the time between readings may extend beyond one week in order for a reading to coincide with the end of an accounting period only if such extension is for no longer than six (6) days.

(12) The employee who records the in-meter reading shall either be independent of the hard count team or shall be assigned on a rotating basis, unless the in-meter readings are randomly verified quarterly for all gaming machines and bill acceptors by a person other than the regular in-meter reader.

(13) Upon receipt of the meter reading summary, the accounting department shall review all meter readings for reasonableness using pre-established parameters.

(14) Prior to final preparation of statistical reports, meter readings that do not appear reasonable shall be reviewed with gaming machine department employees or other appropriate designees, and exceptions documented, so that meters can be repaired or clerical errors in the recording of meter readings can be corrected.

(15) A report shall be produced at least monthly showing month-to-date, year-to-date (previous twelve (12) months data preferred), and if practicable, life-to-date actual hold percentage computations for individual machines and a comparison to each machine's theoretical hold percentage previously discussed.

(16) Each change to a gaming machine's theoretical hold percentage, including progressive percentage contributions, shall result in that machine being treated as a new machine in the statistical reports (*i.e.,* not commingling various hold percentages), except for adjustments made in accordance with paragraph (h)(2) of this section.

(17) If promotional payouts or awards are included on the gaming machine statistical reports, it shall be in a manner that prevents distorting the actual hold percentages of the affected machines.

(18) The statistical reports shall be reviewed by both gaming machine department management and management employees independent of the gaming machine department on at least a monthly basis.

(19) For those machines in play for more than six (6) months, large variances (three percent (3%) recommended) between theoretical hold and actual hold shall be investigated and resolved by a department independent of the gaming machine department with the findings documented and provided to the Tribal gaming regulatory authority upon request in a timely manner.

(20) Maintenance of the on-line gaming machine monitoring system data files shall be performed by a department independent of the gaming machine department. Alternatively, maintenance may be performed by gaming machine supervisory employees if sufficient documentation is generated and it is randomly verified on a monthly basis by employees independent of the gaming machine department.

(21) Updates to the on-line gaming machine monitoring system to reflect additions, deletions, or movements of gaming machines shall be made at least weekly prior to in-meter readings and the weigh process.

(i) *Gaming machine hopper contents standards.* (1) When machines are temporarily removed from the floor, gaming machine drop and hopper contents shall be protected to preclude the misappropriation of stored funds.

(2) When machines are permanently removed from the floor, the gaming machine drop and hopper contents shall be counted and recorded by at least two employees with appropriate documentation being routed to the accounting department for proper recording and accounting for initial hopper loads.

(j) *Player tracking system.* (1) The following standards apply if a player tracking system is utilized:

(i) The player tracking system shall be secured so as to prevent unauthorized access (e.g., changing passwords at least quarterly and physical access to computer hardware, etc.).

(ii) The addition of points to members' accounts other than through actual gaming machine play shall be sufficiently documented (including substantiation of reasons for increases) and shall be authorized by a department independent of the player tracking and gaming machines. Alternatively, addition of points to members' accounts may be authorized by gaming machine supervisory employees if sufficient documentation is generated and it is randomly verified by employees independent of the gaming machine department on a quarterly basis.

(iii) Booth employees who redeem points for members shall be allowed to receive lost players club cards, provided that they are immediately deposited into a secured container for retrieval by independent personnel.

(iv) Changes to the player tracking system parameters, such as point structures and employee access, shall be performed by supervisory employees independent of the gaming machine department. Alternatively, changes to player tracking system parameters may be performed by gaming machine supervisory employees if sufficient documentation is generated and it is randomly verified by supervisory employees independent of the gaming machine department on a monthly basis.

(v) All other changes to the player tracking system shall be appropriately documented.

(2) [Reserved]

(k) *In-house progressive gaming machine standards.* (1) A meter that shows the amount of the progressive jackpot shall be conspicuously displayed at or near the machines to which the jackpot applies.

(2) At least once each day, each gaming operation shall record the amount shown on each progressive jackpot meter at the gaming operation except for those jackpots that can be paid directly from the machine's hopper;

(3) Explanations for meter reading decreases shall be maintained with the progressive meter reading sheets, and where the payment of a jackpot is the explanation for a decrease, the gaming operation shall record the jackpot payout number on the sheet or have the number reasonably available; and

(4) Each gaming operation shall record the base amount of each progressive jackpot the gaming operation offers.

(5) The Tribal gaming regulatory authority shall approve procedures specific to the transfer of progressive amounts in excess of the base amount to other gaming machines. Such procedures may also include other methods of distribution that accrue to the benefit of the gaming public via an award or prize.

(l) *Wide area progressive gaming machine standards.* (1) A meter that shows the amount of the progressive jackpot shall be conspicuously displayed at or near the machines to which the jackpot applies.

(2) As applicable to participating gaming operations, the wide area progressive gaming machine system shall be adequately restricted to prevent unauthorized access (e.g., changing passwords at least quarterly, restrict access to EPROMs or other equivalent game software media, and restrict physical access to computer hardware, etc.).

(3) The Tribal gaming regulatory authority shall approve procedures for the wide area progressive system that:

(i) Reconcile meters and jackpot payouts;

(ii) Collect/drop gaming machine funds;

(iii) Verify jackpot, payment, and billing to gaming operations on pro-rata basis;

(iv) System maintenance;

(v) System accuracy; and

(vi) System security.

(4) Reports, where applicable, adequately documenting the procedures required in paragraph (1)(3) of this section shall be generated and retained.

(m) *Accounting/auditing standards.* (1) Gaming machine accounting/auditing procedures shall be performed by employees who are independent of the transactions being reviewed.

(2) For on-line gaming machine monitoring systems, procedures shall be performed at least monthly to verify that the system is transmitting and receiving data from the gaming machines properly and to verify the continuing accuracy of the coin-in meter readings as recorded in the gaming machine statistical report.

(3) For weigh scale and currency interface systems, for at least one drop period per month accounting/auditing employees shall make such comparisons as necessary to the system generated count as recorded in the gaming machine statistical report. Discrepancies shall be resolved prior to generation/distribution of gaming machine reports.

(4) For each drop period, accounting/auditing personnel shall compare the coin-to-drop meter reading to the actual drop amount. Discrepancies should be resolved prior to generation/distribution of on-line gaming machine monitoring system statistical reports.

(5) Follow-up shall be performed for any one machine having an unresolved variance between actual coin drop and coin-to-drop meter reading in excess of three percent (3%) and over $25.00. The follow-up performed and results of the investigation shall be documented, maintained for inspection, and provided to the Tribal gaming regulatory authority upon request.

(6) At least weekly, accounting/auditing employees shall compare the bill-in meter reading to the total bill acceptor drop amount for the week. Discrepancies shall be resolved before the generation/distribution of gaming machine statistical reports.

(7) Follow-up shall be performed for any one machine having an unresolved variance between actual currency drop and bill-in meter reading in excess of $200.00. The follow-up performed and results of the investigation shall be documented, maintained for inspection, and provided to the Tribal gaming regulatory authority upon request.

(8) At least annually, accounting/auditing personnel shall randomly verify that EPROM or other equivalent game software media changes are properly reflected in the gaming machine analysis reports.

(9) Accounting/auditing employees shall review exception reports for all computerized gaming machine systems on a daily basis for propriety of transactions and unusual occurrences.

(10) All gaming machine auditing procedures and any follow-up performed shall be documented, maintained for inspection, and provided to the Tribal gaming regulatory authority upon request.

(n) *Cash-out tickets.* For gaming machines that utilize cash-out tickets, the following standards apply. This standard is not applicable to Tiers A and B. Tier A and B gaming operations shall develop adequate standards governing the security over the issuance of the cash-out paper to the gaming machines and the redemption of cash-out slips.

(1) In addition to the applicable auditing and accounting standards in paragraph (m) of this section, on a quarterly basis, the gaming operation shall foot all jackpot cash-out tickets equal to or greater than $1,200 and trace totals to those produced by the host validation computer system.

(2) The customer may request a cash-out ticket from the gaming machine that reflects all remaining credits. The cash-out ticket shall be printed at the gaming machine by an internal document printer. The cash-out ticket shall be valid for a time period specified by the Tribal gaming regulatory authority, or the gaming operation as approved by the Tribal gaming regulatory authority. Cash-out tickets may be redeemed for payment or inserted in another gaming machine and wagered, if applicable, during the specified time period.

(3) The customer shall redeem the cash-out ticket at a change booth or cashiers' cage. Alternatively, if a gaming operation utilizes a remote computer validation system, the Tribal gaming regulatory authority, or the gaming operation as approved by the Tribal gaming regulatory authority, shall develop alternate standards for the maximum amount that can be redeemed, which shall not exceed $2,999.99 per cash-out transaction.

(4) Upon presentation of the cash-out ticket(s) for redemption, the following shall occur:

(i) Scan the bar code via an optical reader or its equivalent; or

(ii) Input the cash-out ticket validation number into the computer.

(5) The information contained in paragraph (n)(4) of this section shall be communicated to the host computer. The host computer shall verify the authenticity of the cash-out ticket and communicate directly to the redeemer of the cash-out ticket.

(6) If valid, the cashier (redeemer of the cash-out ticket) pays the customer the appropriate amount and the cash-out ticket is electronically noted ''paid'' in the system. The ''paid'' cash-out

ticket shall remain in the cashiers'' bank for reconciliation purposes. The host validation computer system shall electronically reconcile the cashier's banks for the paid cashed-out tickets.

(7) If invalid, the host computer shall notify the cashier (redeemer of the cash-out ticket). The cashier (redeemer of the cash-out ticket) shall refuse payment to the customer and notify a supervisor of the invalid condition. The supervisor shall resolve the dispute.

(8) If the host validation computer system temporarily goes down, cashiers may redeem cash-out tickets at a change booth or cashier's cage after recording the following:

(i) Serial number of the cash-out ticket;

(ii) Date and time;

(iii) Dollar amount;

(iv) Issuing gaming machine number;

(v) Marking ticket ''paid''; and

(vi) Ticket shall remain in cashier's bank for reconciliation purposes.

(9) Cash-out tickets shall be validated as expeditiously as possible when the host validation computer system is restored.

(10) The Tribal gaming regulatory authority, or the gaming operation as approved by the Tribal gaming regulatory authority, shall establish and the gaming operation shall comply with procedures to control cash-out ticket paper, which shall include procedures that:

(i) Mitigate the risk of counterfeiting of cash-out ticket paper;

(ii) Adequately control the inventory of the cash-out ticket paper; and

(iii) Provide for the destruction of all unused cash-out ticket paper.

(iv) Alternatively, if the gaming operation utilizes a computer validation system, this standard shall not apply.

(11) If the host validation computer system is down for more than four (4) hours, the gaming operation shall promptly notify the Tribal gaming regulatory authority or its designated representative.

(12) These gaming machine systems shall comply with all other standards (as applicable) in this part including:

(i) Standards for bill acceptor drop and count;

(ii) Standards for coin drop and count; and

(iii) Standards concerning EPROMS or other equivalent game software media.

(o) *Account access cards.* For gaming machines that utilize account access cards to activate play of the machine, the following standards shall apply:

(1) *Equipment.* (i) A central computer, with supporting hardware and software, to coordinate network activities, provide system interface, and store and manage a player/account database;

(ii) A network of contiguous player terminals with touch-screen or button-controlled video monitors connected to an electronic selection device and the central computer via a communications network;

(iii) One or more electronic selection devices, utilizing random number generators, each of which selects any combination or combinations of numbers, colors, and/or symbols for a network of player terminals.

(2) *Player terminals standards.* (i) The player terminals are connected to a game server;

(ii) The game server shall generate and transmit to the bank of player terminals a set of random numbers, colors, and/or symbols at regular intervals. The subsequent game results are determined at the player terminal and the resulting information is transmitted to the account server;

(iii) The game server shall be housed in a game server room or a secure locked cabinet.

(3) *Customer account maintenance standards.* (i) A central computer acting as an account server shall provide customer account maintenance and the deposit/withdrawal function of those account balances;

(ii) Customers may access their accounts on the computer system by means of an account access card at the player terminal. Each player terminal may be equipped with a card reader and personal identification number (PIN) pad or touch screen array for this purpose;

(iii) All communications between the player terminal, or bank of player terminals, and the account server shall be encrypted for security reasons.

(4) *Customer account generation standards.* (i) A computer file for each customer shall be prepared by a clerk, with no incompatible functions, prior to the customer being issued an account access card to be utilized for machine play. The customer may select his/her PIN to be used in conjunction with the account access card.

(ii) The clerk shall sign-on with a unique password to a terminal equipped with peripherals required to establish a customer account. Passwords are issued and can only be changed by information technology personnel at the discretion of the department director.

(iii) After entering a specified number of incorrect PIN entries at the cage or player terminal, the customer shall be directed to proceed to the Gaming Machine Information Center to obtain a new PIN. If a customer forgets, misplaces or requests a change to their PIN, the customer shall proceed to the Gaming Machine Information Center.

(5) *Deposit of credits standards.* (i) The cashier shall sign-on with a unique password to a cashier terminal equipped with peripherals required to complete the credit transactions. Passwords are issued and can only be changed by information technology personnel at the discretion of the department director.

(ii) The customer shall present cash, chips, coin or coupons along with their account access card to a cashier to deposit credits.

(iii) The cashier shall complete the transaction by utilizing a card scanner that the cashier shall slide the customer's account access card through.

(iv) The cashier shall accept the funds from the customer and enter the appropriate amount on the cashier terminal.

(v) A multi-part deposit slip shall be generated by the point of sale receipt printer. The cashier shall direct the customer to sign the deposit slip receipt. One copy of the deposit slip shall be given to the customer. The other copy of the deposit slip shall be secured in the cashier's cash drawer.

(vi) The cashier shall verify the customer's balance before completing the transaction. The cashier shall secure the funds in their cash drawer and return the account access card to the customer.

(vii) Alternatively, if a kiosk is utilized to accept a deposit of credits, the Tribal gaming regulatory authority, or the gaming operation as approved by the Tribal gaming regulatory authority, shall establish and the gaming operation shall comply with procedures that safeguard the integrity of the kiosk system.

(6) *Prize standards.* (i) Winners at the gaming machines may receive cash, prizes redeemable for cash or merchandise.

(ii) If merchandise prizes are to be awarded, the specific type of prize or prizes that may be won shall be disclosed to the player before the game begins.

(iii) The redemption period of account access cards, as approved by the Tribal gaming regulatory authority, shall be conspicuously posted in the gaming operation.

(7) *Credit withdrawal.* The customer shall present their account access card to a cashier to withdraw their credits. The cashier shall perform the following:

(i) Scan the account access card;

(ii) Request the customer to enter their PIN, if the PIN was selected by the customer;

(iii) The cashier shall ascertain the amount the customer wishes to withdraw and enter the amount into the computer;

(iv) A multi-part withdrawal slip shall be generated by the point of sale receipt printer. The cashier shall direct the customer to sign the withdrawal slip;

(v) The cashier shall verify that the account access card and the customer match by:

(A) Comparing the customer to image on the computer screen;

(B) Comparing the customer to image on customer's picture ID; or

(C) Comparing the customer signature on the withdrawal slip to signature on the computer screen.

(vi) The cashier shall verify the customer's balance before completing the transaction. The cashier shall pay the customer the appropriate amount, issue the customer the original withdrawal slip and return the account access card to the customer;

(vii) The copy of the withdrawal slip shall be placed in the cash drawer. All account transactions shall be accurately tracked by the account server computer system. The copy of the withdrawal slip shall be forwarded to the accounting department at the end of the gaming day; and

(viii) In the event the imaging function is temporarily disabled, customers shall be required to provide positive ID for cash withdrawal transactions at the cashier stations.

(p) *Smart cards.* All smart cards (i.e., cards that possess the means to electronically store and retrieve data) that maintain the only source of account data are prohibited.

§ 542.14 What are the minimum internal control standards for the cage?

(a) *Computer applications.* For any computer applications utilized, alternate documentation and/or procedures that provide at least the level of control described by the standards in this section, as approved by the Tribal gaming regulatory authority, will be acceptable.

(b) *Personal checks, cashier's checks, payroll checks, and counter checks.* (1) If personal checks, cashier's checks, payroll checks, or counter checks are cashed at the cage, the Tribal gaming regulatory authority, or the gaming operation as approved by the Tribal gaming regulatory authority, shall establish and the gaming operation shall comply with appropriate controls for purposes of security and integrity.

(2) The Tribal gaming regulatory authority, or the gaming operation as approved by the Tribal gaming regulatory authority, shall establish and the gaming operation shall comply with procedures for the acceptance of personal checks, collecting and recording checks returned to the gaming operation after deposit, re-deposit, and write-off authorization.

(3) When counter checks are issued, the following shall be included on the check:

(i) The customer's name and signature;

(ii) The dollar amount of the counter check (both alpha and numeric);

(iii) Customer's bank name and bank account number;

(iv) Date of issuance; and

(v) Signature or initials of the person approving the counter check transaction.

(4) When traveler's checks or other guaranteed drafts such as cashier's checks are presented, the cashier shall comply with the examination and documentation procedures as required by the issuer.

(c) *Customer deposited funds.* If a gaming operation permits a customer to deposit funds with the gaming operation at the cage, the following standards shall apply.

(1) The receipt or withdrawal of a customer deposit shall be evidenced by at least a two-part document with one copy going to the customer and one copy remaining in the cage file.

(2) The multi-part receipt shall contain the following information:

(i) Same receipt number on all copies;

(ii) Customer's name and signature;

(iii) Date of receipt and withdrawal;

(iv) Dollar amount of deposit/withdrawal; and

(v) Nature of deposit (cash, check, chips); however,

(vi) Provided all of the information in paragraph (c)(2)(i) through (v) is available, the only required information for all copies of the receipt is the receipt number.

(3) The Tribal gaming regulatory authority, or the gaming operation as approved by the Tribal gaming regulatory authority, shall establish and the gaming operation shall comply with procedures that:

(i) Maintain a detailed record by customer name and date of all funds on deposit;

(ii) Maintain a current balance of all customer cash deposits that are in the cage/vault inventory or accountability; and

(iii) Reconcile this current balance with the deposits and withdrawals at least daily.

(4) The gaming operation, as approved by the Tribal gaming regulatory authority, shall describe the sequence of the required signatures attesting to the accuracy of the information contained on the customer deposit or withdrawal form ensuring that the form is signed by the cashier.

(5) All customer deposits and withdrawal transactions at the cage shall be recorded on a cage accountability form on a per-shift basis.

(6) Only cash, cash equivalents, chips, and tokens shall be accepted from customers for the purpose of a customer deposit.

(7) The Tribal gaming regulatory authority, or the gaming operation as approved by the Tribal gaming regulatory authority, shall establish and the gaming operation shall comply with procedures that verify the customer's identity, including photo identification.

(8) A file for customers shall be prepared prior to acceptance of a deposit.

(d) *Cage and vault accountability standards.* (1) All transactions that flow through the cage shall be summarized on a cage accountability form on a per shift basis and shall be supported by documentation.

(2) The cage and vault (including coin room) inventories shall be counted by the oncoming and outgoing cashiers. These employees shall make individual counts for comparison of accuracy and maintenance of individual accountability. Such counts shall be recorded at the end of each shift during which activity took place. All discrepancies shall be noted and investigated.

(3) The gaming operation cash-on-hand shall include, but is not limited to, the following components:

(i) Currency and coins;

(ii) House chips, including reserve chips;

(iii) Personal checks, cashier's checks, counter checks, and traveler's checks for deposit;

(iv) Customer deposits;

(v) Chips on tables;

(vi) Hopper loads (coins put into machines when they are placed in service); and

(vii) Fills and credits (these documents shall be treated as assets and liabilities, respectively, of the cage during a business day. When win or loss is recorded at the end of the business day, they are removed from the accountability).

(4) The Tribal gaming regulatory authority, or the gaming operation as approved by the Tribal gaming regulatory authority, shall establish and the gaming operation shall comply with a minimum bankroll formula to ensure the gaming operation maintains cash or cash equivalents (on hand and in the bank, if readily accessible) in an amount sufficient to satisfy obligations to the gaming operation's customers as they are incurred. A suggested bankroll

formula will be provided by the Commission upon request.

(e) *Chip and token standards.* The Tribal gaming regulatory authority, or the gaming operation as approved by the Tribal gaming regulatory authority, shall establish and the gaming operation shall comply with procedures for the receipt, inventory, storage, and destruction of gaming chips and tokens.

(f) *Coupon standards.* Any program for the exchange of coupons for chips, tokens, and/or another coupon program shall be approved by the Tribal gaming regulatory authority prior to implementation. If approved, the gaming operation shall establish and comply with procedures that account for and control such programs.

(g) *Accounting/auditing standards.* (1) The cage accountability shall be reconciled to the general ledger at least monthly.

(2) A trial balance of gaming operation accounts receivable, including the name of the customer and current balance, shall be prepared at least monthly for active, inactive, settled or written-off accounts.

(3) The trial balance of gaming operation accounts receivable shall be reconciled to the general ledger each month. The reconciliation and any follow-up performed shall be documented, maintained for inspection, and provided to the Tribal gaming regulatory authority upon request.

(4) On a monthly basis an evaluation of the collection percentage of credit issued to identify unusual trends shall be performed.

(5) All cage and credit accounting procedures and any follow-up performed shall be documented, maintained for inspection, and provided to the Tribal gaming regulatory authority upon request.

(h) *Extraneous items.* The Tribal gaming regulatory authority, or the gaming operation as approved by the Tribal gaming regulatory authority, shall establish and the gaming operation shall comply with procedures to address the transporting of extraneous items, such as coats, purses, and/or boxes, into and out of the cage, coin room, count room, and/or vault.

§ 542.15 What are the minimum internal control standards for credit?

(a) *Computer applications.* For any computer applications utilized, alternate documentation and/or procedures that provide at least the level of control described by the standards in this section, as approved by the Tribal gaming regulatory authority, will be acceptable.

(b) *Credit standards.* The following standards shall apply if the gaming operation authorizes and extends credit to customers:

(1) At least the following information shall be recorded for customers that have credit limits or are issued credit (excluding personal checks, payroll checks, cashier's checks, and traveler's checks):

(i) Customer's name, current address, and signature;

(ii) Identification verifications;

(iii) Authorized credit limit;

(iv) Documentation of authorization by a person designated by management to approve credit limits; and

(v) Credit issuances and payments.

(2) Prior to extending credit, the customer's gaming operation credit record and/or other documentation shall be examined to determine the following:

(i) Properly authorized credit limit;

(ii) Whether remaining credit is sufficient to cover the credit issuance; and

(iii) Identity of the customer (except for known customers).

(3) Credit extensions over a specified dollar amount shall be approved by personnel designated by management.

(4) Proper approval of credit extensions over ten percent (10%) of the previously established limit shall be documented.

(5) The job functions of credit approval (i.e., establishing the customer's credit worthiness) and credit extension (*i.e.,* advancing customer's credit) shall be segregated for credit extensions to a single customer of $10,000 or more per day (applies whether the credit is extended in the pit or the cage).

(6) If cage credit is extended to a single customer in an amount exceeding $2,500, appropriate gaming personnel shall be notified on a timely basis of the customers playing on cage credit, the applicable amount of credit issued, and the available balance.

(7) Cage marker forms shall be at least two parts (the original marker and a payment slip), prenumbered by the printer or concurrently numbered by the computerized system, and utilized in numerical sequence.

(8) The completed original cage marker shall contain at least the following information:

(i) Marker number;

(ii) Player's name and signature; and

(iii) Amount of credit issued (both alpha and numeric).

(9) The completed payment slip shall include the same marker number as the original, date and time of payment, amount of payment, nature of settlement (cash, chips, etc.), and signature of cashier receiving the payment.

(c) *Payment standards.* (1) All payments received on outstanding credit instruments shall be recorded in ink or other permanent form of recordation in the gaming operation's records.

(2) When partial payments are made on credit instruments, they shall be evidenced by a multi-part receipt (or another equivalent document) that contains:

(i) The same preprinted number on all copies;

(ii) Customer's name;

(iii) Date of payment;

(iv) Dollar amount of payment (or remaining balance if a new marker is issued), and nature of settlement (cash, chips, etc.);

(v) Signature of employee receiving payment; and

(vi) Number of credit instrument on which partial payment is being made.

(3) Unless account balances are routinely confirmed on a random basis by the accounting or internal audit departments, or statements are mailed by a person independent of the credit transactions and collections thereon, and the department receiving payments cannot access cash, then the following standards shall apply:

(i) The routing procedures for payments by mail require that they be received by a department independent of credit instrument custody and collection;

(ii) Such receipts by mail shall be documented on a listing indicating the customer's name, amount of payment, nature of payment (if other than a check), and date payment received; and

(iii) The total amount of the listing of mail receipts shall be reconciled with the total mail receipts recorded on the appropriate accountability form by the accounting department on a random basis (for at least three (3) days per month).

(d) *Access to credit documentation.* (1) Access to credit documentation shall be restricted as follows:

(i) The credit information shall be restricted to those positions that require access and are so authorized by management;

(ii) Outstanding credit instruments shall be restricted to persons authorized by management; and

(iii) Written-off credit instruments shall be further restricted to persons specified by management.

(2) [Reserved]

(e) *Maintenance of credit documentation.* (1) All extensions of cage credit, pit credit transferred to the cage, and subsequent payments shall be documented on a credit instrument control form.

(2) Records of all correspondence, transfers to and from outside agencies, and other documents related to issued credit instruments shall be maintained.

(f) *Write-off and settlement standards.* (1) Written-off or settled credit instruments shall be authorized in writing.

(2) Such authorizations shall be made by at least two management officials who are from departments independent of the credit transaction.

(g) *Collection agency standards.* (1) If credit instruments are transferred to collection agencies or other collection representatives, a copy of the credit instrument and a receipt from the collection representative shall be obtained and maintained until the original credit instrument is returned or payment is received.

(2) A person independent of credit transactions and collections shall periodically review the documents in paragraph (g)(1) of this section.

(h) *Accounting/auditing standards.* (1) A person independent of the cage, credit, and collection functions shall perform all of the following at least three (3) times per year:

(i) Ascertain compliance with credit limits and other established credit issuance procedures;

(ii) Randomly reconcile outstanding balances of both active and inactive accounts on the accounts receivable listing to individual credit records and physical instruments;

(iii) Examine credit records to determine that appropriate collection efforts are being made and payments are being properly recorded; and

(iv) For a minimum of five (5) days per month, partial payment receipts shall be subsequently reconciled to the total payments recorded by the cage for the day and shall be numerically accounted for.

(2) [Reserved]

§ 542.16 What are the minimum internal control standards for information technology?

(a) *General controls for gaming hardware and software.* (1) Management shall take an active role in making sure that physical and logical security measures are implemented, maintained, and adhered to by personnel to prevent unauthorized access that could cause errors or compromise data or processing integrity.

(i) Management shall ensure that all new gaming vendor hardware and software agreements/contracts contain language requiring the vendor to adhere to tribal internal control standards applicable to the goods and services the vendor is providing.

(ii) Physical security measures shall exist over computer, computer terminals, and storage media to prevent unauthorized access and loss of integrity of data and processing.

(iii) Access to systems software and application programs shall be limited to authorized personnel.

(iv) Access to computer data shall be limited to authorized personnel.

(v) Access to computer communications facilities, or the computer system, and information transmissions shall be limited to authorized personnel.

(vi) Standards in paragraph (a)(1) of this section shall apply to each applicable department within the gaming operation.

(2) The main computers (i.e., hardware, software, and data files) for each gaming application (*e.g.,* keno, race and sports, gaming machines, etc.) shall be in a secured area with access restricted to authorized persons, including vendors.

(3) Access to computer operations shall be restricted to authorized personnel to reduce the risk of loss of integrity of data or processing.

(4) Incompatible duties shall be adequately segregated and monitored to prevent error in general information technology procedures to go undetected or fraud to be concealed.

(5) Non-information technology personnel shall be precluded from having unrestricted access to the secured computer areas.

(6) The computer systems, including application software, shall be secured through the use of passwords or other approved means where applicable. Management personnel or persons independent of the department being controlled shall assign and control access to system functions.

(7) Passwords shall be controlled as follows unless otherwise addressed in the standards in this section.

(i) Each user shall have their own individual password;

(ii) Passwords shall be changed at least quarterly with changes documented; and

(iii) For computer systems that automatically force a password change on a quarterly basis, documentation shall be maintained listing the systems and the date the user was given access.

(8) Adequate backup and recovery procedures shall be in place that include:

(i) Frequent backup of data files;

(ii) Backup of all programs;

(iii) Secured off-site storage of all backup data files and programs, or other adequate protection; and

(iv) Recovery procedures, which are tested on a sample basis at least annually with documentation of results.

(9) Adequate information technology system documentation shall be maintained, including descriptions of hardware and software, operator manuals, etc.

(b) *Independence of information technology personnel.* (1) The information technology personnel shall be independent of the gaming areas (*e.g.*, cage, pit, count rooms, etc.). Information technology personnel procedures and controls should be documented and responsibilities communicated.

(2) Information technology personnel shall be precluded from unauthorized access to:

(i) Computers and terminals located in gaming areas;

(ii) Source documents; and

(iii) Live data files (not test data).

(3) Information technology personnel shall be restricted from:

(i) Having unauthorized access to cash or other liquid assets; and

(ii) Initiating general or subsidiary ledger entries.

(c) *Gaming program changes.* (1) Program changes for in-house developed systems should be documented as follows:

(i) Requests for new programs or program changes shall be reviewed by the information technology supervisor. Approvals to begin work on the program shall be documented;

(ii) A written plan of implementation for new and modified programs shall be maintained, and shall include, at a minimum, the date the program is to be placed into service, the nature of the change, a description of procedures required in order to bring the new or modified program into service (conversion or input of data, installation procedures, etc.), and an indication of who is to perform all such procedures;

(iii) Testing of new and modified programs shall be performed and documented prior to implementation; and

(iv) A record of the final program or program changes, including evidence of user acceptance, date in service, programmer, and reason for changes, shall be documented and maintained.

(2) [Reserved]

(d) *Security logs.* (1) If computer security logs are generated by the system, they shall be reviewed by information technology supervisory personnel for evidence of:

(i) Multiple attempts to log-on, or alternatively, the system shall deny user access after three attempts to log-on;

(ii) Unauthorized changes to live data files; and

(iii) Any other unusual transactions.

(2) This paragraph shall not apply to personal computers.

(e) *Remote dial-up.* (1) If remote dial-up to any associated equipment is allowed for software support, the gaming operation shall maintain an access log that includes:

(i) Name of employee authorizing modem access;

(ii) Name of authorized programmer or manufacturer representative;

(iii) Reason for modem access;

(iv) Description of work performed; and

(v) Date, time, and duration of access.

(2) [Reserved]

(f) *Document storage.* (1) Documents may be scanned or directly stored to an unalterable storage medium under the following conditions.

(i) The storage medium shall contain the exact duplicate of the original document.

(ii) All documents stored on the storage medium shall be maintained with a detailed index containing the gaming operation department and date. This index shall be available upon request by the Commission.

(iii) Upon request and adequate notice by the Commission, hardware (terminal, printer, etc.) shall be made available in order to perform auditing procedures.

(iv) Controls shall exist to ensure the accurate reproduction of records up to and including the printing of stored documents used for auditing purposes.

(v) The storage medium shall be retained for a minimum of five years.

(vi) Original documents must be retained until the books and records have been audited by an independent certified public accountant.

(2) [Reserved]

§ 542.17 What are the minimum internal control standards for complimentary services or items?

(a) Each Tribal gaming regulatory authority or gaming operation shall establish and the gaming operation shall comply with procedures for the authorization, issuance, and tracking of complimentary services and items, including cash and non-cash gifts. Such procedures must be approved by the Tribal gaming regulatory authority and shall include, but shall not be limited to, the procedures by which the gaming operation delegates to its employees the authority to approve the issuance of complimentary services and items, and the procedures by which conditions or limits, if any, which may apply to such authority are established and modified (including limits based on relationships between the authorizer and recipient), and shall further include effective provisions for audit purposes.

(b) At least monthly, accounting, information technology, or audit personnel that cannot grant or receive complimentary privileges shall prepare reports that include the following information:

(1) Name of customer who received the complimentary service or item;

(2) Name(s) of authorized issuer of the complimentary service or item;

(3) The actual cash value of the complimentary service or item;

(4) The type of complimentary service or item (i.e., food, beverage, etc.); and

(5) Date the complimentary service or item was issued.

(c) The report required by paragraph (b) of this section shall not be required to include complimentary services or items below a reasonable amount to be established by the Tribal gaming regulatory authority, or the gaming operation as approved by the Tribal gaming regulatory authority.

(d) The internal audit or accounting departments shall review the reports required in paragraph (b) of this section at least monthly. These reports shall be made available to the Tribe, Tribal gaming regulatory authority, audit committee, other entity designated by the Tribe, and the Commission upon request.

§ 542.18 How does a gaming operation apply for a variance from the standards of this part?

(a) *Tribal gaming regulatory authority approval.* (1) A Tribal gaming regulatory authority may approve a variance for a gaming operation if it has determined that the variance will achieve a level of control sufficient to accomplish the purpose of the standard it is to replace.

(2) For each enumerated standard for which the Tribal gaming regulatory authority approves a variance, it shall submit to the Commission, within thirty (30) days, a detailed report, which shall include the following:

(i) A detailed description of the variance;

(ii) An explanation of how the variance achieves a level of control sufficient to accomplish the purpose of the standard it is to replace; and

(iii) Evidence that the Tribal gaming regulatory authority has approved the variance.

(3) In the event that the Tribal gaming regulatory authority or the Tribe chooses to submit a variance request directly to the Commission, it may do so without the approval requirement set forth in paragraph (a)(2)(iii) of this section.

(b) *Commission concurrence.* (1) Following receipt of the variance approval, the Commission shall have sixty (60) days to concur with or object to the approval of the variance.

(2) Any objection raised by the Commission shall be in the form of a written explanation based upon the following criteria:

(i) There is no valid explanation of why the gaming operation should have received a variance approval from the Tribal gaming regulatory authority on the enumerated standard; or

(ii) The variance as approved by the Tribal gaming regulatory authority does not provide a level of control sufficient to accomplish the purpose of the standard it is to replace.

(3) If the Commission fails to object in writing within sixty (60) days after the date of receipt of a complete submission, the variance shall be considered concurred with by the Commission.

(4) The 60-day deadline may be extended, provided such extension is mutually agreed upon by the Tribal gaming regulatory authority and the Commission.

(c) *Curing Commission objections.* (1) Following an objection by the Commission to the issuance of a variance, the Tribal gaming regulatory authority shall have the opportunity to cure any objections noted by the Commission.

(2) A Tribal gaming regulatory authority may cure the objections raised by the Commission by:

(i) Rescinding its initial approval of the variance; or

(ii) Amending its initial approval and re-submitting it to the Commission.

(3) Upon any re-submission of a variance approval, the Commission shall have thirty (30) days to concur with or object to the re-submitted variance.

(4) If the Commission fails to object in writing within thirty (30) days after the date of receipt of the re-submitted variance, the re-submitted variance shall be considered concurred with by the Commission.

(d) *Appeals.* (1) Upon receipt of objections to a re-submission of a variance, the Tribal gaming regulatory authority shall be entitled to an appeal to the full Commission in accordance with the following process:

(i) Within thirty (30) days of receiving an objection to a re-submission, the Tribal gaming regulatory authority shall file its notice of appeal.

(ii) Failure to file an appeal within the time provided by this section shall result in a waiver of the opportunity for an appeal.

(iii) An appeal under this section shall specify the reasons why the Tribal gaming regulatory authority believes the

Commission's objections should be reviewed, and shall include supporting documentation, if any.

(iv) Within thirty (30) days after receipt of the appeal, the Commission shall render a decision based upon the criteria contained within paragraph (b)(2) of this section unless the appellant elects to provide the Commission additional time, not to exceed an additional thirty (30) days, to render a decision.

(v) In the absence of a decision within the time provided, the Tribal gaming regulatory authority's re-submission shall be considered concurred with by the Commission and become effective.

(2) [Reserved]

(e) *Effective date of variance.* The gaming operation shall comply with standards that achieve a level of control sufficient to accomplish the purpose of the standard it is to replace until such time as the Commission objects to the Tribal gaming regulatory authority's approval of a variance as provided in paragraph (b) of this section.

§ 542.20 What is a Tier A gaming operation?

A Tier A gaming operation is one with annual gross gaming revenues of more than $1 million but not more than $5 million.

§ 542.21 What are the minimum internal control standards for drop and count for Tier A gaming operations?

(a) *Computer applications.* For any computer applications utilized, alternate documentation and/or procedures that provide at least the level of control described by the standards in this section, as approved by the Tribal gaming regulatory authority, will be acceptable.

(b) *Table game drop standards.* (1) The setting out of empty table game drop boxes and the drop shall be a continuous process.

(2) At the end of each shift:

(i) All locked table game drop boxes shall be removed from the tables by a person independent of the pit shift being dropped;

(ii) A separate drop box shall be placed on each table opened at any time during each shift or a gaming operation may utilize a single drop box with separate openings and compartments for each shift; and

(iii) Upon removal from the tables, table game drop boxes shall be transported directly to the count room or other equivalently secure area with comparable controls and locked in a secure manner until the count takes place.

(3) If drop boxes are not placed on all tables, then the pit department shall document which tables were open during the shift.

(4) The transporting of table game drop boxes shall be performed by a minimum of two persons, at least one of whom is independent of the pit shift being dropped.

(5) All table game drop boxes shall be posted with a number corresponding to a permanent number on the gaming table and marked to indicate game, table number, and shift.

(c) *Soft count room personnel.* (1) The table game soft count and the gaming machine bill acceptor count shall be performed by a minimum of two employees.

(2) Count room personnel shall not be allowed to exit or enter the count room during the count except for emergencies or scheduled breaks. At no time during the count, shall there be fewer than two employees in the count room until the drop proceeds have been accepted into cage/vault accountability.

(3) Count team members shall be rotated on a routine basis such that the count team is not consistently the same two persons more than four (4) days per week. This standard shall not apply to gaming operations that utilize a count team of more than two persons.

(4) The count team shall be independent of transactions being reviewed and counted. The count team shall be independent of the cage/vault departments, however, a dealer or a cage cashier may be used if this person is not allowed to perform the recording function. An accounting representative may be used if there is an independent audit of all soft count documentation.

(d) *Table game soft count standards.* (1) The table game soft count shall be performed in a soft count room or other equivalently secure area with comparable controls.

(2) Access to the count room during the count shall be restricted to members of the drop and count teams, with the exception of authorized observers, supervisors for resolution of problems, and authorized maintenance personnel.

(3) If counts from various revenue centers occur simultaneously in the count room, procedures shall be in effect that prevent the commingling of funds from different revenue centers.

(4) The table game drop boxes shall be individually emptied and counted in such a manner to prevent the commingling of funds between boxes until the count of the box has been recorded.

(i) The count of each box shall be recorded in ink or other permanent form of recordation.

(ii) A second count shall be performed by an employee on the count team who did not perform the initial count.

(iii) Corrections to information originally recorded by the count team on soft count documentation shall be made by drawing a single line through the error, writing the correct figure above the original figure, and then obtaining the initials of at least two count team members who verified the change, unless the count team only has two (2) members in which case the initials of only one (1) verifying member is required.

(5) If cash counters are utilized and the count room table is used only to empty boxes and sort/stack contents, a count team member shall be able to observe the loading and unloading of all cash at the cash counter, including rejected cash.

(6) Table game drop boxes, when empty, shall be shown to another member of the count team, or to another person who is observing the count, or to surveillance.

(7) Orders for fill/credit (if applicable) shall be matched to the fill/credit slips. Fills and credits shall be traced to or recorded on the count sheet.

(8) Pit marker issue and payment slips (if applicable) removed from the table game drop boxes shall either be:

(i) Traced to or recorded on the count sheet by the count team; or

(ii) Totaled by shift and traced to the totals documented by the computerized system. Accounting personnel shall verify the issue/payment slip for each table is accurate.

(9) Foreign currency exchange forms (if applicable) removed from the table game drop boxes shall be reviewed for the proper daily exchange rate and the conversion amount shall be recomputed by the count team. Alternatively, this may be performed by accounting/auditing employees.

(10) The opening/closing table and marker inventory forms (if applicable) shall either be:

(i) Examined and traced to or recorded on the count sheet; or

(ii) If a computerized system is used, accounting personnel can trace the opening/closing table and marker inventory forms to the count sheet. Discrepancies shall be investigated with the findings documented and maintained for inspection.

(11) The count sheet shall be reconciled to the total drop by a count team member who shall not function as the sole recorder.

(12) All members of the count team shall sign the count document or a summary report to attest to their participation in the count.

(13) All drop proceeds and cash equivalents that were counted shall be turned over to the cage or vault cashier (who shall be independent of the count team) or to an authorized person/employee independent of the revenue generation and the count process for verification. Such person shall certify by signature as to the accuracy of the drop proceeds delivered and received.

(14) The count sheet, with all supporting documents, shall be delivered to the accounting department by a count team member or a person independent of the cashiers department. Alternatively, it may be adequately secured (e.g., locked container to which only accounting personnel can gain access) until retrieved by the accounting department.

(15) Access to stored, full table game drop boxes shall be restricted to authorized members of the drop and count teams.

(e) *Gaming machine bill acceptor drop standards.* (1) A minimum of two employees shall be involved in the removal of the gaming machine drop, at least one of whom is independent of the gaming machine department.

(2) All bill acceptor canisters shall be removed only at the time previously designated by the gaming operation and reported to the Tribal gaming regulatory authority, except for emergency drops.

(3) The bill acceptor canisters shall be removed by a person independent of the gaming machine department then transported directly to the count room or other equivalently secure area with comparable controls and locked in a secure manner until the count takes place.

(i) Security shall be provided over the bill acceptor canisters removed from the gaming machines and awaiting transport to the count room.

(ii) The transporting of bill acceptor canisters shall be performed by a minimum of two persons, at least one of whom is independent of the gaming machine department.

(4) All bill acceptor canisters shall be posted with a number corresponding to a permanent number on the gaming machine.

(f) *Gaming machine bill acceptor count standards.* (1) The gaming machine bill acceptor count shall be performed in a soft count room or other equivalently secure area with comparable controls.

(2) Access to the count room during the count shall be restricted to members of the drop and count teams, with the exception of authorized observers, supervisors for resolution of problems, and authorized maintenance personnel.

(3) If counts from various revenue centers occur simultaneously in the count room, procedures shall be in effect that prevent the commingling of funds from different revenue centers.

(4) The bill acceptor canisters shall be individually emptied and counted in such a manner to prevent the commingling of funds between canisters until the count of the canister has been recorded.

(i) The count of each canister shall be recorded in ink or other permanent form of recordation.

(ii) A second count shall be performed by an employee on the count team who did not perform the initial count.

(iii) Corrections to information originally recorded by the count team on soft count documentation shall be made by drawing a single line through the error, writing the correct figure above the original figure, and then obtaining the initials of at least two count team members who verified the change.

(5) If cash counters are utilized and the count room table is used only to empty canisters and sort/stack contents, a count team member shall be able to observe the loading and unloading of all cash at the cash counter, including rejected cash.

(6) Canisters, when empty, shall be shown to another member of the count team, or to another person who is observing the count, or to surveillance.

(7) The count sheet shall be reconciled to the total drop by a count team member who shall not function as the sole recorder.

(8) All members of the count team shall sign the count document or a summary report to attest to their participation in the count.

(9) All drop proceeds and cash equivalents that were counted shall be turned over to the cage or vault cashier (who shall be independent of the count team) or to an authorized person/employee independent of the revenue generation and the count process for verification. Such person shall certify by signature as to the accuracy of the drop proceeds delivered and received.

(10) The count sheet, with all supporting documents, shall be delivered to the accounting department by a count team member or a person independent of the cashiers department. Alternatively, it may be adequately secured (e.g., locked container to which only accounting personnel can gain access) until retrieved by the accounting department.

(11) Access to stored bill acceptor canisters, full or empty, shall be restricted to:

(i) Authorized members of the drop and count teams; and

(ii) Authorized personnel in an emergency for resolution of a problem.

(12) All bill acceptor canisters shall be posted with a number corresponding to a permanent number on the gaming machine.

(g) *Gaming machine coin drop standards.* (1) A minimum of two employees shall be involved in the removal of the gaming machine drop, at least one of whom is independent of the gaming machine department.

(2) All drop buckets shall be removed only at the time previously designated by the gaming operation and reported to the Tribal gaming regulatory authority, except for emergency drops.

(3) Security shall be provided over the buckets removed from the gaming machine drop cabinets and awaiting transport to the count room.

(4) As each machine is opened, the contents shall be tagged with its respective machine number if the bucket is not permanently marked with the machine number. The contents shall be transported directly to the area designated for the counting of such drop proceeds. If more than one trip is required to remove the contents of the machines, the filled carts of coins shall be securely locked in the room designed for counting or in another equivalently secure area with comparable controls. There shall be a locked covering on any carts in which the drop route includes passage out of doors.

(i) Alternatively, a smart bucket system that electronically identifies and tracks the gaming machine number, and facilitates the proper recognition of gaming revenue, shall satisfy the requirements of this paragraph.

(ii) [Reserved]

(5) Each drop bucket in use shall be:

(i) Housed in a locked compartment separate from any other compartment of the gaming machine and keyed differently than other gaming machine compartments; and

(ii) Identifiable to the gaming machine from which it is removed. If the gaming machine is identified with a removable tag that is placed in the bucket, the tag shall be placed on top of the bucket when it is collected.

(6) Each gaming machine shall have drop buckets into which coins or tokens that are retained by the gaming machine are collected. Drop bucket contents shall not be used to make change or pay hand-paid payouts.

(7) The collection procedures may include procedures for dropping gaming machines that have trays instead of drop buckets.

(h) *Hard count room personnel.* (1) The weigh/count shall be performed by a minimum of two employees.

(2) At no time during the weigh/count shall there be fewer than two employees in the count room until the drop proceeds have been accepted into cage/vault accountability.

(i) If the gaming machine count is conducted with a continuous mechanical count meter that is not reset during the count and is verified in writing by at least two employees at the start and end of each denomination count, then one employee may perform the wrap.

(ii) [Reserved]

(3) Count team members shall be rotated on a routine basis such that the count team is not consistently the same two persons more than four (4) days per week. This standard shall not apply to gaming operations that utilize a count team of more than two persons.

(4) The count team shall be independent of transactions being reviewed and counted. The count team shall be independent of the cage/vault departments, unless they are non-supervisory gaming machine employees and perform the laborer function only (A non-supervisory gaming machine employee is defined as a person below the level of gaming machine shift supervisor). A cage cashier may be used if this person is not allowed to perform the recording function. An accounting representative may be used if there is an independent audit of all count documentation.

(i) *Gaming machine coin count and wrap standards.* (1) Coins shall include tokens.

(2) The gaming machine coin count and wrap shall be performed in a count room or other equivalently secure area with comparable controls.

(i) Alternatively, an on-the-floor drop system utilizing a mobile scale shall satisfy the requirements of this paragraph, subject to the following conditions:

(A) The gaming operation shall utilize and maintain an effective on-line gaming machine monitoring system, as described in § 542.13(m)(3);

(B) Components of the on-the-floor drop system shall include, but not be limited to, a weigh scale, a laptop computer through which weigh/count applications are operated, a security camera available for the mobile scale system, and a VCR to be housed within the video compartment of the mobile scale. The system may include a mule cart used for mobile weigh scale system locomotion.

(C) The gaming operation must obtain the security camera available with the system, and this camera must be added in such a way as to eliminate tampering.

(D) Prior to the drop, the drop/count team shall ensure the scale batteries are charged;

(E) Prior to the drop, a videotape shall be inserted into the VCR used to record the drop in conjunction with the security camera system and the VCR shall be activated;

(F) The weigh scale test shall be performed prior to removing the unit from the hard count room for the start of the weigh/drop/count;

(G) Surveillance shall be notified when the weigh/drop/count begins and shall be capable of monitoring the entire process;

(H) An observer independent of the weigh/drop/count teams (independent observer) shall remain by the weigh scale at all times and shall observe the entire weigh/drop/count process;

(I) Physical custody of the key(s) needed to access the laptop and video compartment shall require the involvement of two persons, one of whom is independent of the drop and count team;

(J) The mule key (if applicable), the laptop and video compartment keys, and the remote control for the VCR shall be maintained by a department independent of the gaming machine department. The appropriate personnel shall sign out these keys;

(K) A person independent of the weigh/drop/count teams shall be required to accompany these keys while they are checked out, and observe each time the laptop compartment is opened;

(L) The laptop access panel shall not be opened outside the hard count room, except in instances when the laptop must be rebooted as a result of a crash, lock up, or other situation requiring immediate corrective action;

(M) User access to the system shall be limited to those employees required to have full or limited access to complete the weigh/drop/count; and

(N) When the weigh/drop/count is completed, the independent observer shall access the laptop compartment, end the recording session, eject the videotape, and deliver the videotape to surveillance.

(ii) [Reserved]

(3) Access to the count room during the count shall be restricted to members of the drop and count teams, with the exception of authorized observers, supervisors for resolution of problems, and authorized maintenance personnel.

(4) If counts from various revenue centers occur simultaneously in the count room, procedures shall be in effect that prevent the commingling of funds from different revenue centers.

(5) The following functions shall be performed in the counting of the gaming machine drop:

(i) Recorder function, which involves the recording of the gaming machine count; and

(ii) Count team supervisor function, which involves the control of the gaming machine weigh and wrap process. The supervisor shall not perform the initial recording of the weigh/count unless a weigh scale with a printer is used.

(6) The gaming machine drop shall be counted, wrapped, and reconciled in such a manner to prevent the commingling of gaming machine drop coin with coin (for each denomination) from the next gaming machine drop until the count of the gaming machine drop has been recorded. If the coins are not wrapped immediately after being weighed or counted, they shall be secured and not commingled with other coins.

(i) The amount of the gaming machine drop from each machine shall be recorded in ink or other permanent form of recordation on a gaming machine count document by the recorder or mechanically printed by the weigh scale.

(ii) Corrections to information originally recorded by the count team on gaming machine count documentation shall be made by drawing a single line through the error, writing the correct figure above the original figure, and then obtaining the initials of at least two count team members who verified the change.

(A) If a weigh scale interface is used, corrections to gaming machine count data shall be made using either of the following:

(*1*) Drawing a single line through the error on the gaming machine document, writing the correct figure above the original figure, and then obtaining the initials of at least two count team employees. If this procedure is used, an employee independent of the gaming machine department and count team shall enter the correct figure into the computer system prior to the generation of related gaming machine reports; or

(*2*) During the count process, correct the error in the computer system and enter the passwords of at least two count team employees. If this procedure is used, an exception report shall be generated by the computer system identifying the gaming machine number, the error, the correction, and the count team employees attesting to the correction.

(B) [Reserved]

(7) If applicable, the weight shall be converted to dollar amounts prior to the reconciliation of the weigh to the wrap.

(8) If a coin meter is used, a count team member shall convert the coin count for each denomination into dollars and shall enter the results on a summary sheet.

(9) The recorder and at least one other count team member shall sign the weigh tape and the gaming machine count document attesting to the accuracy of the weigh/count.

(10) All members of the count team shall sign the count document or a summary report to attest to their participation in the count.

(11) All drop proceeds and cash equivalents that were counted shall be turned over to the cage or vault cashier (who shall be independent of the count team) or to an authorized person/employee independent of the revenue generation and the count process for verification. Such person shall certify by signature as to the accuracy of the drop proceeds delivered and received.

(12) All gaming machine count and wrap documentation, including any applicable computer storage media, shall be delivered to the accounting department by a count team member or a person independent of the cashier's department. Alternatively, it may be adequately secured (*e.g.*, locked container to which only accounting personnel can gain access) until retrieved by the accounting department.

(13) If the coins are transported off the property, a second (alternative) count procedure shall be performed before the coins leave the property. Any variances shall be documented.

(14) Variances. Large (by denomination, either $1,000 or 2% of the drop, whichever is less) or unusual (*e.g.,* zero for weigh/count or patterned for all counts) variances between the weigh/count and wrap shall be investigated by management personnel independent of the gaming machine department, count team, and the cage/vault functions on a timely basis. The results of such investigation shall be documented, maintained for inspection, and provided to the Tribal gaming regulatory authority upon request.

(j) *Security of the coin room inventory during the gaming machine coin count and wrap.* (1) If the count room serves as a coin room and coin room inventory is not secured so as to preclude access by the count team, then the following standards shall apply:

(i) At the commencement of the gaming machine count the following requirements shall be met:

(A) The coin room inventory shall be counted by at least two employees, one of whom is a member of the count team and the other is independent of the weigh/count and wrap procedures;

(B) The count in paragraph (j)(1)(i)(A) of this section shall be recorded on an appropriate inventory form;

(ii) Upon completion of the wrap of the gaming machine drop:

(A) At least two members of the count team (wrap team), independently from each other, shall count the ending coin room inventory;

(B) The counts in paragraph (j)(1)(ii)(A) of this section shall be recorded on a summary report(s) that evidences the calculation of the final wrap by subtracting the beginning inventory from the sum of the ending inventory and transfers in and out of the coin room;

(C) The same count team members shall compare the calculated wrap to the weigh/count, recording the comparison and noting any variances on the summary report;

(D) A member of the cage/vault department shall count the ending coin room inventory by denomination and shall reconcile it to the beginning inventory, wrap, transfers, and weigh/count; and

(E) At the conclusion of the reconciliation, at least two count/wrap team members and the verifying employee shall sign the summary report(s) attesting to its accuracy.

(iii) The functions described in paragraph (j)(1)(ii)(A) and (C) of this section may be performed by only one count team member. That count team member must then sign the summary report, along with the verifying employee, as required under paragraph (j)(1)(ii)(E).

(2) If the count room is segregated from the coin room, or if the coin room is used as a count room and the coin room inventory is secured to preclude access by the count team, all of the following requirements shall be completed, at the conclusion of the count:

(i) At least two members of the count/wrap team shall count the final wrapped gaming machine drop independently from each other;

(ii) The counts shall be recorded on a summary report;

(iii) The same count team members (or the accounting department) shall compare the final wrap to the weigh/count, recording the comparison, and noting any variances on the summary report;

(iv) A member of the cage/vault department shall count the wrapped gaming machine drop by denomination and reconcile it to the weigh/count;

(v) At the conclusion of the reconciliation, at least two count team members and the cage/vault employee shall sign the summary report attesting to its accuracy; and

(vi) The wrapped coins (exclusive of proper transfers) shall be transported to the cage, vault or coin vault after the reconciliation of the weigh/count to the wrap.

(k) *Transfers during the gaming machine coin count and wrap.* (1) Transfers may be permitted during the count and wrap only if permitted under the internal control standards approved by the Tribal gaming regulatory authority.

(2) Each transfer shall be recorded on a separate multi-part form with a preprinted or concurrently-printed form number (used solely for gaming machine count transfers) that shall be subsequently reconciled by the accounting department to ensure the accuracy of the reconciled gaming machine drop.

(3) Each transfer must be counted and signed for by at least two members of the count team and by a person independent of the count team who is responsible for authorizing the transfer.

(l) *Gaming machine drop key control standards.* (1) Gaming machine coin drop cabinet keys, including duplicates, shall be maintained by a department independent of the gaming machine department.

(2) The physical custody of the keys needed to access gaming machine coin drop cabinets, including duplicates, shall require the involvement of two persons, one of whom is independent of the gaming machine department.

(3) Two employees (separate from key custodian) shall be required to accompany such keys while checked out and observe each time gaming machine drop cabinets are accessed.

(m) *Table game drop box key control standards.* (1) Tier A gaming operations shall be exempt from compliance with this paragraph if the Tribal gaming regulatory authority, or the gaming operation as approved by the Tribal gaming regulatory authority, establishes and the gaming operation complies with procedures that maintain adequate key control and restricts access to the keys.

(2) Procedures shall be developed and implemented to insure that unauthorized access to empty table game drop boxes shall not occur from the time the boxes leave the storage racks until they are placed on the tables.

(3) The involvement of at least two persons independent of the cage department shall be required to access stored empty table game drop boxes.

(4) The release keys shall be separately keyed from the contents keys.

(5) At least two count team members are required to be present at the time count room and other count keys are issued for the count.

(6) All duplicate keys shall be maintained in a manner that provides the same degree of control as is required for the original keys. Records shall be maintained for each key duplicated that indicate the number of keys made and destroyed.

(7) Logs shall be maintained by the custodian of sensitive keys to document authorization of personnel accessing keys.

(n) *Table game drop box release keys.* (1) Tier A gaming operations shall be exempt from compliance with this paragraph if the Tribal gaming regulatory authority, or the gaming operation as approved by the Tribal gaming regulatory authority, establishes and the gaming operation complies with procedures that maintain adequate key control and restricts access to the keys.

(2) The table game drop box release keys shall be maintained by a department independent of the pit department.

(3) Only the person(s) authorized to remove table game drop boxes from the tables shall be allowed access to the table game drop box release keys; however, the count team members may have access to the release keys during the soft count in order to reset the table game drop boxes.

(4) Persons authorized to remove the table game drop boxes shall be precluded from having simultaneous access to the table game drop box contents keys and release keys.

(5) For situations requiring access to a table game drop box at a time other than the scheduled drop, the date, time, and signature of employee signing out/in the release key must be documented.

(o) *Bill acceptor canister release keys.* (1) Tier A gaming operations shall be exempt from compliance with this paragraph if the Tribal gaming regulatory authority, or the gaming operation as approved by the Tribal gaming regulatory authority, establishes and the gaming operation complies with procedures that maintain adequate key control and restricts access to the keys.

(2) The bill acceptor canister release keys shall be maintained by a department independent of the gaming machine department.

(3) Only the person(s) authorized to remove bill acceptor canisters from the gaming machines shall be allowed access to the release keys.

(4) Persons authorized to remove the bill acceptor canisters shall be precluded from having simultaneous access to the bill acceptor canister contents keys and release keys.

(5) For situations requiring access to a bill acceptor canister at a time other than the scheduled drop, the date, time, and signature of employee signing out/in the release key must be documented.

(p) *Table game drop box storage rack keys.* (1) Tier A gaming operations shall be exempt from compliance with this paragraph if the Tribal gaming regulatory authority, or the gaming operation as approved by the Tribal gaming regulatory authority, establishes and the gaming operation complies with procedures that maintain adequate key control and restricts access to the keys.

(2) Persons authorized to obtain table game drop box storage rack keys shall be precluded from having simultaneous access to table game drop box contents keys, with the exception of the count team.

(q) *Bill acceptor canister storage rack keys.* (1) Tier A gaming operations shall be exempt from compliance with this paragraph if the Tribal gaming regulatory authority, or the gaming operation as approved by the Tribal gaming regulatory authority, establishes and the gaming operation complies with procedures that maintain adequate key control and restricts access to the keys.

(2) Persons authorized to obtain bill acceptor canister storage rack keys shall be precluded from having simultaneous access to bill acceptor canister contents keys, with the exception of the count team.

(r) *Table game drop box contents keys.* (1) Tier A gaming operations shall be exempt from compliance with this paragraph if the Tribal gaming regulatory authority, or the gaming operation as approved by the Tribal gaming regulatory authority, establishes and the gaming operation complies with procedures that maintain adequate key control and restricts access to the keys.

(2) The physical custody of the keys needed for accessing stored, full table game drop box contents shall require the involvement of persons from at least two separate departments, with the exception of the count team.

(3) Access to the table game drop box contents key at other than scheduled count times shall require the involvement of at least two persons from separate departments, including management. The reason for access shall be documented with the signatures of all participants and observers.

(4) Only count team members shall be allowed access to table game drop box contents keys during the count process.

(s) *Bill acceptor canister contents keys.* (1) Tier A gaming operations shall be exempt from compliance with this paragraph if the Tribal gaming regulatory authority, or the gaming operation as approved by the Tribal gaming regulatory authority, establishes and the gaming operation complies with procedures that maintain adequate key control and restricts access to the keys.

(2) The physical custody of the keys needed for accessing stored, full bill acceptor canister contents shall require involvement of persons from two separate departments, with the exception of the count team.

(3) Access to the bill acceptor canister contents key at other than scheduled count times shall require the involvement of at least two persons from separate departments, one of whom must be a supervisor. The reason for access shall be documented with the signatures of all participants and observers.

(4) Only the count team members shall be allowed access to bill acceptor canister contents keys during the count process.

(t) *Emergency drop procedures.* Emergency drop procedures shall be developed by the Tribal gaming regulatory authority, or the gaming operation as approved by the Tribal gaming regulatory authority.

(u) *Equipment standards for gaming machine count.*

(1) A weigh scale calibration module shall be secured so as to prevent unauthorized access (e.g., prenumbered seal, lock and key, etc.).

(2) A person independent of the cage, vault, gaming machine, and count team functions shall be required to be present whenever the calibration module is accessed. Such access shall be documented and maintained.

(3) If a weigh scale interface is used, it shall be adequately restricted so as to prevent unauthorized access (passwords, keys, etc.).

(4) If the weigh scale has a zero adjustment mechanism, it shall be physically limited to minor adjustments (*e.g.,* weight of a bucket) or physically situated such that any unnecessary adjustments to it during the weigh process would be observed by other count team members.

(5) The weigh scale and weigh scale interface (if applicable) shall be tested by a person or persons independent of the cage, vault, and gaming machine departments and count team at least quarterly. At least annually, this test shall be performed by internal audit in accordance with the internal audit standards. The result of these tests shall be documented and signed by the person or persons performing the test.

(6) Prior to the gaming machine count, at least two employees shall verify the accuracy of the weigh scale with varying weights or with varying amounts of previously counted coin for each denomination to ensure the scale is properly calibrated (varying weights/coin from drop to drop is acceptable).

(7) If a mechanical coin counter is used (instead of a weigh scale), the Tribal gaming regulatory authority, or the gaming operation as approved by the Tribal gaming regulatory authority, shall establish and the gaming operation shall comply, with procedures that are equivalent to those described in paragraphs (u)(4), (u)(5), and (u)(6) of this section.

(8) If a coin meter count machine is used, the count team member shall record the machine number denomination and number of coins in ink on a source document, unless the meter machine automatically records such information.

(i) A count team member shall test the coin meter count machine prior to the actual count to ascertain if the metering device is functioning properly with a predetermined number of coins for each denomination.

(ii) [Reserved]

§ 542.22 What are the minimum internal control standards for internal audit for Tier A gaming operations?

(a) *Internal audit personnel.* (1) For Tier A gaming operations, a separate internal audit department must be maintained. Alternatively, designating personnel (who are independent with respect to the departments/procedures being examined) to perform internal audit work satisfies the requirements of this paragraph.

(2) The internal audit personnel shall report directly to the Tribe, Tribal gaming regulatory authority, audit committee, or other entity designated by the Tribe in accordance with the definition of internal audit in § 542.2.

(b) *Audits.* (1) Internal audit personnel shall perform audits of all major gaming areas of the gaming operation. The following shall be reviewed at least annually:

(i) Bingo, including but not limited to, bingo card control, payout procedures, and cash reconciliation process;

(ii) Pull tabs, including but not limited to, statistical records, winner verification, perpetual inventory, and accountability of sales versus inventory;

(iii) Card games, including but not limited to, card games operation, cash exchange procedures, shill transactions, and count procedures;

(iv) Keno, including but not limited to, game write and payout procedures, sensitive key location and control, and a review of keno auditing procedures;

(v) Pari-mutual wagering, including write and payout procedures, and pari-mutual auditing procedures;

(vi) Table games, including but not limited to, fill and credit procedures, pit credit play procedures, rim credit procedures, soft drop/count procedures and the subsequent transfer of funds, unannounced testing of count room currency counters and/or currency interface, location and control over sensitive keys, the tracing of source documents to summarized documentation and accounting records, and reconciliation to restricted copies;

(vii) Gaming machines, including but not limited to, jackpot payout and gaming machine fill procedures, gaming machine drop/count and bill acceptor drop/count and subsequent transfer of funds, unannounced testing of weigh scale and weigh scale interface, unannounced testing of count room currency counters and/or currency interface, gaming machine drop cabinet access, tracing of source documents to summarized documentation and accounting records, reconciliation to restricted copies, location and control over sensitive keys, compliance with EPROM duplication procedures, and compliance with MICS procedures for gaming machines that accept currency or coin(s) and issue cash-out tickets or gaming machines that do not accept currency or coin(s) and do not return currency or coin(s);

(viii) Cage and credit procedures including all cage, credit, and collection procedures, and the reconciliation of trial balances to physical instruments on a sample basis. Cage accountability shall be reconciled to the general ledger;

(ix) Information technology functions, including review for compliance with information technology standards;

(x) Complimentary service or item, including but not limited to, procedures whereby complimentary service items are issued, authorized, and redeemed; and

(xi) Any other internal audits as required by the Tribe, Tribal gaming regulatory authority, audit committee, or other entity designated by the Tribe.

(2) In addition to the observation and examinations performed under paragraph (b)(1) of this section, follow-up observations and examinations shall be performed to verify that corrective action has been taken regarding all instances of noncompliance cited by internal audit, the independent accountant, and/or the Commission. The verification shall be performed within six (6) months following the date of notification.

(3) Whenever possible, internal audit observations shall be performed on an unannounced basis (i.e., without the employees being forewarned that their activities will be observed). Additionally, if the independent accountant also performs the internal audit function, the accountant shall perform separate observations of the table games/gaming machine drops and counts to satisfy the internal audit observation requirements and independent accountant tests of controls as required by the American Institute of Certified Public Accountants guide.

(c) *Documentation.* (1) Documentation (*e.g.,* checklists, programs, reports, etc.) shall be prepared to evidence all internal audit work performed as it relates to the requirements in this section, including all instances of noncompliance.

(2) The internal audit department shall operate with audit programs, which, at a minimum, address the MICS. Additionally, the department shall properly document the work performed, the conclusions reached, and the resolution of all exceptions. Institute of Internal Auditors standards are recommended but not required.

(d) *Reports.* (1) Reports documenting audits performed shall be maintained and made available to the Commission upon request.

(2) Such audit reports shall include the following information:

(i) Audit objectives;

(ii) Audit procedures and scope;

(iii) Findings and conclusions;

(iv) Recommendations, if applicable; and

(v) Management's response.

(e) *Material exceptions.* All material exceptions resulting from internal audit work shall be investigated and resolved with the results of such being documented and retained for five years.

(f) *Role of management.* (1) Internal audit findings shall be reported to management.

(2) Management shall be required to respond to internal audit findings stating corrective measures to be taken to avoid recurrence of the audit exception.

(3) Such management responses shall be included in the internal audit report that will be delivered to management, the Tribe, Tribal gaming regulatory authority, audit committee, or other entity designated by the Tribe.

§ 542.23 What are the minimum internal control standards for surveillance for Tier A gaming operations?

(a) Tier A gaming operations must, at a minimum, maintain and operate an unstaffed surveillance system in a

secured location whereby the areas under surveillance are continually recorded.

(b) The entrance to the secured location shall be located so that it is not readily accessible by either gaming operation employees who work primarily on the casino floor, or the general public.

(c) Access to the secured location shall be limited to surveillance personnel, designated employees, and other persons authorized in accordance with the surveillance department policy. Such policy shall be approved by the Tribal gaming regulatory authority.

(d) The surveillance system shall include date and time generators that possess the capability to display the date and time of recorded events on video and/or digital recordings. The displayed date and time shall not significantly obstruct the recorded view.

(e) The surveillance department shall strive to ensure staff is trained in the use of the equipment, knowledge of the games, and house rules.

(f) Each camera required by the standards in this section shall be installed in a manner that will prevent it from being readily obstructed, tampered with, or disabled by customers or employees.

(g) Each camera required by the standards in this section shall possess the capability of having its picture recorded. The surveillance system shall include sufficient numbers of recorders to simultaneously record multiple gaming and count room activities, and record the views of all dedicated cameras and motion activated dedicated cameras.

(h) Reasonable effort shall be made to repair each malfunction of surveillance system equipment required by the standards in this section within seventy-two (72) hours after the malfunction is discovered. The Tribal gaming regulatory authority shall be notified of any camera(s) that has malfunctioned for more than twenty-four (24) hours.

(1) In the event of a dedicated camera malfunction, the gaming operation and/or the surveillance department shall, upon identification of the malfunction, provide alternative camera coverage or other security measures, such as additional supervisory or security personnel, to protect the subject activity.

(2) [Reserved]

(i) *Bingo.* The surveillance system shall record the bingo ball drawing device, the game board, and the activities of the employees responsible for drawing, calling, and entering the balls drawn or numbers selected.

(j) *Card games.* The surveillance system shall record the general activities in each card room and be capable of identifying the employees performing the different functions.

(k) *Keno.* The surveillance system shall record the keno ball-drawing device, the general activities in each keno game area, and be capable of identifying the employees performing the different functions.

(l) *Table games.* (1) *Operations with four (4) or more table games.* Except as otherwise provided in paragraphs (l)(3), (l)(4), and (l)(5) of this section, the surveillance system of gaming operations operating four (4) or more table games shall provide at a minimum one (1) pan-tilt-zoom camera per two (2) tables and surveillance must be capable of taping:

(i) With sufficient clarity to identify customers and dealers; and

(ii) With sufficient coverage and clarity to simultaneously view the table bank and determine the configuration of wagers, card values, and game outcome.

(iii) One (1) dedicated camera per table and one (1) pan-tilt-zoom camera per four (4) tables may be an acceptable alternative procedure to satisfy the requirements of this paragraph.

(2) *Operations with three (3) or fewer table games.* The surveillance system of gaming operations operating three (3) or fewer table games shall:

(i) Comply with the requirements of paragraph (l)(1) of this section; or

(ii) Have one (1) overhead camera at each table.

(3) *Craps.* All craps tables shall have two (2) dedicated cross view cameras covering both ends of the table.

(4) *Roulette.* All roulette areas shall have one (1) overhead dedicated camera covering the roulette wheel and shall also have one (1) dedicated camera covering the play of the table.

(5) *Big wheel.* All big wheel games shall have one (1) dedicated camera viewing the wheel.

(m) *Progressive table games.* (1) Progressive table games with a progressive jackpot of $25,000 or more shall be recorded by dedicated cameras that provide coverage of:

(i) The table surface, sufficient that the card values and card suits can be clearly identified;

(ii) An overall view of the entire table with sufficient clarity to identify customers and dealer; and

(iii) A view of the progressive meter jackpot amount. If several tables are linked to the same progressive jackpot meter, only one meter need be recorded.

(2) [Reserved]

(n) *Gaming machines.* (1) Except as otherwise provided in paragraphs (n)(2) and (n)(3) of this section, gaming machines offering a payout of more than $250,000 shall be recorded by a dedicated camera(s) to provide coverage of:

(i) All customers and employees at the gaming machine; and

(ii) The face of the gaming machine, with sufficient clarity to identify the payout line(s) of the gaming machine.

(2) *In-house progressive machine.* In-house progressive gaming machines offering a base payout amount (jackpot reset amount) of more than $100,000 shall be recorded by a dedicated camera(s) to provide coverage of:

(i) All customers and employees at the gaming machine; and

(ii) The face of the gaming machine, with sufficient clarity to identify the payout line(s) of the gaming machine.

(3) *Wide-area progressive machine.* Wide-area progressive gaming machines offering a base payout amount of more than $1.5 million and monitored by an independent vendor utilizing an on-line progressive computer system shall be recorded by a dedicated camera(s) to provide coverage of:

(i) All customers and employees at the gaming machine; and

(ii) The face of the gaming machine, with sufficient clarity to identify the payout line(s) of the gaming machine.

(4) Notwithstanding paragraph (n)(1) of this section, if the gaming machine is a multi-game machine, the Tribal gaming regulatory authority, or the gaming operation subject to the approval of the Tribal gaming regulatory authority, may develop and implement alternative procedures to verify payouts.

(o) *Currency and coin.* The surveillance system shall record a general overview of all areas where currency or coin may be stored or counted.

(p) *Video recording and/or digital record retention.* (1) All video recordings and/or digital records of coverage provided by the dedicated cameras or motion-activated dedicated cameras required by the standards in this section shall be retained for a minimum of seven (7) days.

(2) Recordings involving suspected or confirmed gaming crimes, unlawful activity, or detentions by security personnel, must be retained for a minimum of thirty (30) days.

(3) Duly authenticated copies of video recordings and/or digital records shall be provided to the Commission upon request.

(q) *Video library log.* A video library log, or comparable alternative procedure approved by the Tribal gaming regulatory authority, shall be maintained to demonstrate compliance

with the storage, identification, and retention standards required in this section.

(r) *Malfunction and repair log.* (1) Surveillance personnel shall maintain a log or alternative procedure approved by the Tribal gaming regulatory authority that documents each malfunction and repair of the surveillance system as defined in this section.

(2) The log shall state the time, date, and nature of each malfunction, the efforts expended to repair the malfunction, and the date of each effort, the reasons for any delays in repairing the malfunction, the date the malfunction is repaired, and where applicable, any alternative security measures that were taken.

§ 542.30 What is a Tier B gaming operation?

A Tier B gaming operation is one with gross gaming revenues of more than $5 million but not more than $15 million.

§ 542.31 What are the minimum internal control standards for drop and count for Tier B gaming operations?

(a) *Computer applications.* For any computer applications utilized, alternate documentation and/or procedures that provide at least the level of control described by the standards in this section, as approved by the Tribal gaming regulatory authority, will be acceptable.

(b) *Table game drop standards.* (1) The setting out of empty table game drop boxes and the drop shall be a continuous process.

(2) At the end of each shift:

(i) All locked table game drop boxes shall be removed from the tables by a person independent of the pit shift being dropped;

(ii) A separate drop box shall be placed on each table opened at any time during each shift or a gaming operation may utilize a single drop box with separate openings and compartments for each shift; and

(iii) Upon removal from the tables, table game drop boxes shall be transported directly to the count room or other equivalently secure area with comparable controls and locked in a secure manner until the count takes place.

(3) If drop boxes are not placed on all tables, then the pit department shall document which tables were open during the shift.

(4) The transporting of table game drop boxes shall be performed by a minimum of two persons, at least one of whom is independent of the pit shift being dropped.

(5) All table game drop boxes shall be posted with a number corresponding to a permanent number on the gaming table and marked to indicate game, table number, and shift.

(6) Surveillance shall be notified when the drop is to begin so that surveillance may monitor the activities.

(c) *Soft count room personnel.* (1) The table game soft count and the gaming machine bill acceptor count shall be performed by a minimum of two employees.

(i) The count shall be viewed live, or on video recording and/or digital record, within seven (7) days by an employee independent of the count.

(ii) [Reserved]

(2) Count room personnel shall not be allowed to exit or enter the count room during the count except for emergencies or scheduled breaks. At no time during the count, shall there be fewer than two employees in the count room until the drop proceeds have been accepted into cage/vault accountability. Surveillance shall be notified whenever count room personnel exit or enter the count room during the count.

(3) Count team members shall be rotated on a routine basis such that the count team is not consistently the same two persons more than four (4) days per week. This standard shall not apply to gaming operations that utilize a count team of more than two persons.

(4) The count team shall be independent of transactions being reviewed and counted. The count team shall be independent of the cage/vault departments, however, a dealer or a cage cashier may be used if this person is not allowed to perform the recording function. An accounting representative may be used if there is an independent audit of all soft count documentation.

(d) *Table game soft count standards.* (1) The table game soft count shall be performed in a soft count room or other equivalently secure area with comparable controls.

(2) Access to the count room during the count shall be restricted to members of the drop and count teams, with the exception of authorized observers, supervisors for resolution of problems, and authorized maintenance personnel.

(3) If counts from various revenue centers occur simultaneously in the count room, procedures shall be in effect that prevent the commingling of funds from different revenue centers.

(4) The table game drop boxes shall be individually emptied and counted in such a manner to prevent the commingling of funds between boxes until the count of the box has been recorded.

(i) The count of each box shall be recorded in ink or other permanent form of recordation.

(ii) A second count shall be performed by an employee on the count team who did not perform the initial count.

(iii) Corrections to information originally recorded by the count team on soft count documentation shall be made by drawing a single line through the error, writing the correct figure above the original figure, and then obtaining the initials of at least two count team members who verified the change, unless the count team only has two (2) members in which case the initials of only one (1) verifying count team member is required.

(5) If currency counters are utilized and the count room table is used only to empty boxes and sort/stack contents, a count team member shall be able to observe the loading and unloading of all currency at the currency counter, including rejected currency.

(6) Table game drop boxes, when empty, shall be shown to another member of the count team, or to another person who is observing the count, or to surveillance, provided the count is monitored in its entirety by a person independent of the count.

(7) Orders for fill/credit (if applicable) shall be matched to the fill/credit slips. Fills and credits shall be traced to or recorded on the count sheet.

(8) Pit marker issue and payment slips (if applicable) removed from the table game drop boxes shall either be:

(i) Traced to or recorded on the count sheet by the count team; or

(ii) Totaled by shift and traced to the totals documented by the computerized system. Accounting personnel shall verify the issue/payment slip for each table is accurate.

(9) Foreign currency exchange forms (if applicable) removed from the table game drop boxes shall be reviewed for the proper daily exchange rate and the conversion amount shall be recomputed by the count team. Alternatively, this may be performed by accounting/auditing employees.

(10) The opening/closing table and marker inventory forms (if applicable) shall either be:

(i) Examined and traced to or recorded on the count sheet; or

(ii) If a computerized system is used, accounting personnel can trace the opening/closing table and marker inventory forms to the count sheet. Discrepancies shall be investigated with the findings documented and maintained for inspection.

(11) The count sheet shall be reconciled to the total drop by a count

team member who shall not function as the sole recorder.

(12) All members of the count team shall sign the count document or a summary report to attest to their participation in the count.

(13) All drop proceeds and cash equivalents that were counted shall be turned over to the cage or vault cashier (who shall be independent of the count team) or to an authorized person/employee independent of the revenue generation and the count process for verification. Such person shall certify by signature as to the accuracy of the drop proceeds delivered and received.

(14) The count sheet, with all supporting documents, shall be delivered to the accounting department by a count team member or a person independent of the cashiers department. Alternatively, it may be adequately secured (e.g., locked container to which only accounting personnel can gain access) until retrieved by the accounting department.

(15) Access to stored, full table game drop boxes shall be restricted to authorized members of the drop and count teams.

(e) *Gaming machine bill acceptor drop standards.* (1) A minimum of two employees shall be involved in the removal of the gaming machine drop, at least one of who is independent of the gaming machine department.

(2) All bill acceptor canisters shall be removed only at the time previously designated by the gaming operation and reported to the Tribal gaming regulatory authority, except for emergency drops.

(3) Surveillance shall be notified when the drop is to begin so that surveillance may monitor the activities.

(4) The bill acceptor canisters shall be removed by a person independent of the gaming machine department then transported directly to the count room or other equivalently secure area with comparable controls and locked in a secure manner until the count takes place.

(i) Security shall be provided over the bill acceptor canisters removed from the gaming machines and awaiting transport to the count room.

(ii) The transporting of bill acceptor canisters shall be performed by a minimum of two persons, at least one of who is independent of the gaming machine department.

(5) All bill acceptor canisters shall be posted with a number corresponding to a permanent number on the gaming machine.

(f) *Gaming machine bill acceptor count standards.* (1) The gaming machine bill acceptor count shall be performed in a soft count room or other equivalently secure area with comparable controls.

(2) Access to the count room during the count shall be restricted to members of the drop and count teams, with the exception of authorized observers, supervisors for resolution of problems, and authorized maintenance personnel.

(3) If counts from various revenue centers occur simultaneously in the count room, procedures shall be in effect that prevent the commingling of funds from different revenue centers.

(4) The bill acceptor canisters shall be individually emptied and counted in such a manner to prevent the commingling of funds between canisters until the count of the canister has been recorded.

(i) The count of each canister shall be recorded in ink or other permanent form of recordation.

(ii) A second count shall be performed by an employee on the count team who did not perform the initial count.

(iii) Corrections to information originally recorded by the count team on soft count documentation shall be made by drawing a single line through the error, writing the correct figure above the original figure, and then obtaining the initials of at least two count team members who verified the change.

(5) If currency counters are utilized and the count room table is used only to empty canisters and sort/stack contents, a count team member shall be able to observe the loading and unloading of all currency at the currency counter, including rejected currency.

(6) Canisters, when empty, shall be shown to another member of the count team, to another person who is observing the count, or to surveillance, provided that the count is monitored in its entirety by a person independent of the count.

(7) The count sheet shall be reconciled to the total drop by a count team member who shall not function as the sole recorder.

(8) All members of the count team shall sign the count document or a summary report to attest to their participation in the count.

(9) All drop proceeds and cash equivalents that were counted shall be turned over to the cage or vault cashier (who shall be independent of the count team) or to an authorized person/employee independent of the revenue generation and the count process for verification. Such person shall certify by signature as to the accuracy of the drop proceeds delivered and received.

(10) The count sheet, with all supporting documents, shall be delivered to the accounting department by a count team member or a person independent of the cashiers department. Alternatively, it may be adequately secured (e.g., locked container to which only accounting personnel can gain access) until retrieved by the accounting department.

(11) Access to stored bill acceptor canisters, full or empty, shall be restricted to:

(i) Authorized members of the drop and count teams; and

(ii) Authorized personnel in an emergency for the resolution of a problem.

(12) All bill acceptor canisters shall be posted with a number corresponding to a permanent number on the gaming machine.

(g) *Gaming machine coin drop standards.* (1) A minimum of two employees shall be involved in the removal of the gaming machine drop, at least one of who is independent of the gaming machine department.

(2) All drop buckets shall be removed only at the time previously designated by the gaming operation and reported to the Tribal gaming regulatory authority, except for emergency drops.

(3) Surveillance shall be notified when the drop is to begin in order that surveillance may monitor the activities.

(4) Security shall be provided over the buckets removed from the gaming machine drop cabinets and awaiting transport to the count room.

(5) As each machine is opened, the contents shall be tagged with its respective machine number if the bucket is not permanently marked with the machine number. The contents shall be transported directly to the area designated for the counting of such drop proceeds. If more than one trip is required to remove the contents of the machines, the filled carts of coins shall be securely locked in the room designed for counting or in another equivalently secure area with comparable controls. There shall be a locked covering on any carts in which the drop route includes passage out of doors.

(i) Alternatively, a smart bucket system that electronically identifies and tracks the gaming machine number, and facilitates the proper recognition of gaming revenue, shall satisfy the requirements of this paragraph.

(ii) [Reserved]

(6) Each drop bucket in use shall be:

(i) Housed in a locked compartment separate from any other compartment of the gaming machine and keyed differently than other gaming machine compartments; and

(ii) Identifiable to the gaming machine from which it is removed. If the gaming

machine is identified with a removable tag that is placed in the bucket, the tag shall be placed on top of the bucket when it is collected.

(7) Each gaming machine shall have drop buckets into which coins or tokens that are retained by the gaming machine are collected. Drop bucket contents shall not be used to make change or pay hand-paid payouts.

(8) The collection procedures may include procedures for dropping gaming machines that have trays instead of drop buckets.

(h) *Hard count room personnel.* (1) The weigh/count shall be performed by a minimum of two employees.

(i) The count shall be viewed either live, or on video recording and/or digital record within seven (7) days by an employee independent of the count.

(ii) [Reserved]

(2) At no time during the weigh/count shall there be fewer than two employees in the count room until the drop proceeds have been accepted into cage/vault accountability. Surveillance shall be notified whenever count room personnel exit or enter the count room during the count.

(i) If the gaming machine count is conducted with a continuous mechanical count meter that is not reset during the count and is verified in writing by at least two employees at the start and end of each denomination count, then one employee may perform the wrap.

(ii) [Reserved]

(3) Count team members shall be rotated on a routine basis such that the count team is not consistently the same two persons more than four (4) days per week. This standard shall not apply to gaming operations that utilize a count team of more than two persons.

(4) The count team shall be independent of transactions being reviewed and counted. The count team shall be independent of the cage/vault departments, unless they are non-supervisory gaming machine employees and perform the laborer function only (A non-supervisory gaming machine employee is defined as a person below the level of gaming machine shift supervisor). A cage cashier may be used if this person is not allowed to perform the recording function. An accounting representative may be used if there is an independent audit of all count documentation.

(i) *Gaming machine coin count and wrap standards.* (1) Coins shall include tokens.

(2) The gaming machine coin count and wrap shall be performed in a count room or other equivalently secure area with comparable controls.

(i) Alternatively, an on-the-floor drop system utilizing a mobile scale shall satisfy the requirements of this paragraph, subject to the following conditions:

(A) The gaming operation shall utilize and maintain an effective on-line gaming machine monitoring system, as described in § 542.13(m)(3);

(B) Components of the on-the-floor drop system shall include, but not be limited to, a weigh scale, a laptop computer through which weigh/count applications are operated, a security camera available for the mobile scale system, and a VCR to be housed within the video compartment of the mobile scale. The system may include a mule cart used for mobile weigh scale system locomotion.

(C) The gaming operation must obtain the security camera available with the system, and this camera must be added in such a way as to eliminate tampering.

(D) Prior to the drop, the drop/count team shall ensure the scale batteries are charged;

(E) Prior to the drop, a videotape shall be inserted into the VCR used to record the drop in conjunction with the security camera system and the VCR shall be activated;

(F) The weigh scale test shall be performed prior to removing the unit from the hard count room for the start of the weigh/drop/count;

(G) Surveillance shall be notified when the weigh/drop/count begins and shall be capable of monitoring the entire process;

(H) An observer independent of the weigh/drop/count teams (independent observer) shall remain by the weigh scale at all times and shall observe the entire weigh/drop/count process;

(I) Physical custody of the key(s) needed to access the laptop and video compartment shall require the involvement of two persons, one of whom is independent of the drop and count team;

(J) The mule key (if applicable), the laptop and video compartment keys, and the remote control for the VCR shall be maintained by a department independent of the gaming machine department. The appropriate personnel shall sign out these keys;

(K) A person independent of the weigh/drop/count teams shall be required to accompany these keys while they are checked out, and observe each time the laptop compartment is opened;

(L) The laptop access panel shall not be opened outside the hard count room, except in instances when the laptop must be rebooted as a result of a crash, lock up, or other situation requiring immediate corrective action;

(M) User access to the system shall be limited to those employees required to have full or limited access to complete the weigh/drop/count; and

(N) When the weigh/drop/count is completed, the independent observer shall access the laptop compartment, end the recording session, eject the videotape, and deliver the videotape to surveillance.

(ii) [Reserved]

(3) Access to the count room during the count shall be restricted to members of the drop and count teams, with the exception of authorized observers, supervisors for resolution of problems, and authorized maintenance personnel.

(4) If counts from various revenue centers occur simultaneously in the count room, procedures shall be in effect that prevent the commingling of funds from different revenue centers.

(5) The following functions shall be performed in the counting of the gaming machine drop:

(i) Recorder function, which involves the recording of the gaming machine count; and

(ii) Count team supervisor function, which involves the control of the gaming machine weigh and wrap process. The supervisor shall not perform the initial recording of the weigh/count unless a weigh scale with a printer is used.

(6) The gaming machine drop shall be counted, wrapped, and reconciled in such a manner to prevent the commingling of gaming machine drop coin with coin (for each denomination) from the next gaming machine drop until the count of the gaming machine drop has been recorded. If the coins are not wrapped immediately after being weighed or counted, they shall be secured and not commingled with other coin.

(i) The amount of the gaming machine drop from each machine shall be recorded in ink or other permanent form of recordation on a gaming machine count document by the recorder or mechanically printed by the weigh scale.

(ii) Corrections to information originally recorded by the count team on gaming machine count documentation shall be made by drawing a single line through the error, writing the correct figure above the original figure, and then obtaining the initials of at least two count team members who verified the change.

(A) If a weigh scale interface is used, corrections to gaming machine count data shall be made using either of the following:

(*1*) Drawing a single line through the error on the gaming machine document,

writing the correct figure above the original figure, and then obtaining the initials of at least two count team employees. If this procedure is used, an employee independent of the gaming machine department and count team shall enter the correct figure into the computer system prior to the generation of related gaming machine reports; or

(*2*) During the count process, correct the error in the computer system and enter the passwords of at least two count team employees. If this procedure is used, an exception report shall be generated by the computer system identifying the gaming machine number, the error, the correction, and the count team employees attesting to the correction.

(B) [Reserved]

(7) If applicable, the weight shall be converted to dollar amounts before the reconciliation of the weigh to the wrap.

(8) If a coin meter is used, a count team member shall convert the coin count for each denomination into dollars and shall enter the results on a summary sheet.

(9) The recorder and at least one other count team member shall sign the weigh tape and the gaming machine count document attesting to the accuracy of the weigh/count.

(10) All members of the count team shall sign the count document or a summary report to attest to their participation in the count.

(11) All drop proceeds and cash equivalents that were counted shall be turned over to the cage or vault cashier (who shall be independent of the count team) or to an authorized person/employee independent of the revenue generation and the count process for verification. Such person shall certify by signature as to the accuracy of the drop proceeds delivered and received.

(12) All gaming machine count and wrap documentation, including any applicable computer storage media, shall be delivered to the accounting department by a count team member or a person independent of the cashier's department. Alternatively, it may be adequately secured (e.g., locked container to which only accounting personnel can gain access) until retrieved by the accounting department.

(13) If the coins are transported off the property, a second (alternative) count procedure shall be performed before the coins leave the property. Any variances shall be documented.

(14) Variances. Large (by denomination, either $1,000 or 2% of the drop, whichever is less) or unusual (e.g., zero for weigh/count or patterned for all counts) variances between the weigh/count and wrap shall be investigated by management personnel independent of the gaming machine department, count team, and the cage/vault functions on a timely basis. The results of such investigation shall be documented, maintained for inspection, and provided to the Tribal gaming regulatory authority upon request.

(j) *Security of the coin room inventory during the gaming machine coin count and wrap.* (1) If the count room serves as a coin room and coin room inventory is not secured so as to preclude access by the count team, then the following standards shall apply:

(i) At the commencement of the gaming machine count the following requirements shall be met:

(A) The coin room inventory shall be counted by at least two employees, one of whom is a member of the count team and the other is independent of the weigh/count and wrap procedures;

(B) The count in paragraph (j)(1)(i)(A) of this section shall be recorded on an appropriate inventory form;

(ii) Upon completion of the wrap of the gaming machine drop:

(A) At least two members of the count team (wrap team), independently from each other, shall count the ending coin room inventory;

(B) The counts in paragraph (j)(1)(ii)(A) of this section shall be recorded on a summary report(s) that evidences the calculation of the final wrap by subtracting the beginning inventory from the sum of the ending inventory and transfers in and out of the coin room;

(C) The same count team members shall compare the calculated wrap to the weigh/count, recording the comparison and noting any variances on the summary report;

(D) A member of the cage/vault department shall count the ending coin room inventory by denomination and shall reconcile it to the beginning inventory, wrap, transfers and weigh/count; and

(E) At the conclusion of the reconciliation, at least two count/wrap team members and the verifying employee shall sign the summary report(s) attesting to its accuracy.

(iii) The functions described in paragraph (j)(1)(ii)(A) and (C) of this section may be performed by only one count team member. That count team member must then sign the summary report, along with the verifying employee, as required under paragraph (j)(1)(ii)(E).

(2) If the count room is segregated from the coin room, or if the coin room is used as a count room and the coin room inventory is secured to preclude access by the count team, all of the following requirements shall be completed, at the conclusion of the count:

(i) At least two members of the count/wrap team shall count the final wrapped gaming machine drop independently from each other;

(ii) The counts shall be recorded on a summary report;

(iii) The same count team members (or the accounting department) shall compare the final wrap to the weigh/count, recording the comparison, and noting any variances on the summary report;

(iv) A member of the cage/vault department shall count the wrapped gaming machine drop by denomination and reconcile it to the weigh/count;

(v) At the conclusion of the reconciliation, at least two count team members and the cage/vault employee shall sign the summary report attesting to its accuracy; and

(vi) The wrapped coins (exclusive of proper transfers) shall be transported to the cage, vault or coin vault after the reconciliation of the weigh/count to the wrap.

(k) *Transfers during the gaming machine coin count and wrap.* (1) Transfers may be permitted during the count and wrap only if permitted under the internal control standards approved by the Tribal gaming regulatory authority.

(2) Each transfer shall be recorded on a separate multi-part form with a preprinted or concurrently-printed form number (used solely for gaming machine count transfers) that shall be subsequently reconciled by the accounting department to ensure the accuracy of the reconciled gaming machine drop.

(3) Each transfer must be counted and signed for by at least two members of the count team and by a person independent of the count team who is responsible for authorizing the transfer.

(l) *Gaming machine drop key control standards.* (1) Gaming machine coin drop cabinet keys, including duplicates, shall be maintained by a department independent of the gaming machine department.

(2) The physical custody of the keys needed to access gaming machine coin drop cabinets, including duplicates, shall require the involvement of two persons, one of whom is independent of the gaming machine department.

(3) Two employees (separate from key custodian) shall be required to accompany such keys while checked out and observe each time gaming machine drop cabinets are accessed, unless surveillance is notified each time keys are checked out and surveillance

observes the person throughout the period the keys are checked out.

(m) *Table game drop box key control standards.* (1) Procedures shall be developed and implemented to insure that unauthorized access to empty table game drop boxes shall not occur from the time the boxes leave the storage racks until they are placed on the tables.

(2) The involvement of at least two persons independent of the cage department shall be required to access stored empty table game drop boxes.

(3) The release keys shall be separately keyed from the contents keys.

(4) At least two count team members are required to be present at the time count room and other count keys are issued for the count.

(5) All duplicate keys shall be maintained in a manner that provides the same degree of control as is required for the original keys. Records shall be maintained for each key duplicated that indicate the number of keys made and destroyed.

(6) Logs shall be maintained by the custodian of sensitive keys to document authorization of personnel accessing keys.

(n) *Table game drop box release keys.* (1) The table game drop box release keys shall be maintained by a department independent of the pit department.

(2) Only the person(s) authorized to remove table game drop boxes from the tables shall be allowed access to the table game drop box release keys; however, the count team members may have access to the release keys during the soft count in order to reset the table game drop boxes.

(3) Persons authorized to remove the table game drop boxes shall be precluded from having simultaneous access to the table game drop box contents keys and release keys.

(4) For situations requiring access to a table game drop box at a time other than the scheduled drop, the date, time, and signature of employee signing out/in the release key must be documented.

(o) *Bill acceptor canister release keys.* (1) The bill acceptor canister release keys shall be maintained by a department independent of the gaming machine department.

(2) Only the person(s) authorized to remove bill acceptor canisters from the gaming machines shall be allowed access to the release keys.

(3) Persons authorized to remove the bill acceptor canisters shall be precluded from having simultaneous access to the bill acceptor canister contents keys and release keys.

(4) For situations requiring access to a bill acceptor canister at a time other than the scheduled drop, the date, time, and signature of employee signing out/in the release key must be documented.

(p) *Table game drop box storage rack keys.* Persons authorized to obtain table game drop box storage rack keys shall be precluded from having simultaneous access to table game drop box contents keys with the exception of the count team.

(q) *Bill acceptor canister storage rack keys.* Persons authorized to obtain bill acceptor canister storage rack keys shall be precluded from having simultaneous access to bill acceptor canister contents keys with the exception of the count team.

(r) *Table game drop box contents keys.* (1) The physical custody of the keys needed for accessing stored, full table game drop box contents shall require the involvement of persons from at least two separate departments, with the exception of the count team.

(2) Access to the table game drop box contents key at other than scheduled count times shall require the involvement of at least two persons from separate departments, including management. The reason for access shall be documented with the signatures of all participants and observers.

(3) Only count team members shall be allowed access to table game drop box contents keys during the count process.

(s) *Bill acceptor canister contents keys.* (1) The physical custody of the keys needed for accessing stored, full bill acceptor canister contents shall require involvement of persons from two separate departments, with the exception of the count team.

(2) Access to the bill acceptor canister contents key at other than scheduled count times shall require the involvement of at least two persons from separate departments, one of whom must be a supervisor. The reason for access shall be documented with the signatures of all participants and observers.

(3) Only the count team members shall be allowed access to bill acceptor canister contents keys during the count process.

(t) *Emergency drop procedures.* Emergency drop procedures shall be developed by the Tribal gaming regulatory authority, or the gaming operation as approved by the Tribal gaming regulatory authority.

(u) *Equipment standards for gaming machine count.* (1) A weigh scale calibration module shall be secured so as to prevent unauthorized access (e.g., prenumbered seal, lock and key, etc.).

(2) A person independent of the cage, vault, gaming machine, and count team functions shall be required to be present whenever the calibration module is accessed. Such access shall be documented and maintained.

(3) If a weigh scale interface is used, it shall be adequately restricted so as to prevent unauthorized access (passwords, keys, etc.).

(4) If the weigh scale has a zero adjustment mechanism, it shall be physically limited to minor adjustments (e.g., weight of a bucket) or physically situated such that any unnecessary adjustments to it during the weigh process would be observed by other count team members.

(5) The weigh scale and weigh scale interface (if applicable) shall be tested by a person or persons independent of the cage, vault, and gaming machine departments and count team at least quarterly. At least annually, this test shall be performed by internal audit in accordance with the internal audit standards. The result of these tests shall be documented and signed by the person or persons performing the test.

(6) Prior to the gaming machine count, at least two employees shall verify the accuracy of the weigh scale with varying weights or with varying amounts of previously counted coin for each denomination to ensure the scale is properly calibrated (varying weights/coin from drop to drop is acceptable).

(7) If a mechanical coin counter is used (instead of a weigh scale), the Tribal gaming regulatory authority, or the gaming operation as approved by the Tribal gaming regulatory authority, shall establish and the gaming operation shall comply with procedures that are equivalent to those described in paragraphs (u)(4), (u)(5), and (u)(6) of this section.

(8) If a coin meter count machine is used, the count team member shall record the machine number denomination and number of coins in ink on a source document, unless the meter machine automatically records such information.

(i) A count team member shall test the coin meter count machine before the actual count to ascertain if the metering device is functioning properly with a predetermined number of coins for each denomination.

(ii) [Reserved]

§ 542.32 What are the minimum internal control standards for internal audit for Tier B gaming operations?

(a) *Internal audit personnel.* (1) For Tier B gaming operations, a separate internal audit department must be maintained. Alternatively, designating personnel (who are independent with respect to the departments/procedures being examined) to perform internal

audit work satisfies the requirements of this paragraph.

(2) The internal audit personnel shall report directly to the Tribe, Tribal gaming regulatory authority, audit committee, or other entity designated by the Tribe in accordance with the definition of internal audit in § 542.2.

(b) *Audits.* (1) Internal audit personnel shall perform audits of all major gaming areas of the gaming operation. The following shall be reviewed at least annually:

(i) Bingo, including but not limited to, bingo card control, payout procedures, and cash reconciliation process;

(ii) Pull tabs, including but not limited to, statistical records, winner verification, perpetual inventory, and accountability of sales versus inventory;

(iii) Card games, including but not limited to, card games operation, cash exchange procedures, shill transactions, and count procedures;

(iv) Keno, including but not limited to, game write and payout procedures, sensitive key location and control, and a review of keno auditing procedures;

(v) Pari-mutual wagering, including write and payout procedures, and pari-mutual auditing procedures;

(vi) Table games, including but not limited to, fill and credit procedures, pit credit play procedures, rim credit procedures, soft drop/count procedures and the subsequent transfer of funds, unannounced testing of count room currency counters and/or currency interface, location and control over sensitive keys, the tracing of source documents to summarized documentation and accounting records, and reconciliation to restricted copies;

(vii) Gaming machines, including but not limited to, jackpot payout and gaming machine fill procedures, gaming machine drop/count and bill acceptor drop/count and subsequent transfer of funds, unannounced testing of weigh scale and weigh scale interface, unannounced testing of count room currency counters and/or currency interface, gaming machine drop cabinet access, tracing of source documents to summarized documentation and accounting records, reconciliation to restricted copies, location and control over sensitive keys, compliance with EPROM duplication procedures, and compliance with MICS procedures for gaming machines that accept currency or coin(s) and issue cash-out tickets or gaming machines that do not accept currency or coin(s) and do not return currency or coin(s);

(viii) Cage and credit procedures including all cage, credit, and collection procedures, and the reconciliation of trial balances to physical instruments on a sample basis. Cage accountability shall be reconciled to the general ledger;

(ix) Information technology functions, including review for compliance with information technology standards;

(x) Complimentary service or item, including but not limited to, procedures whereby complimentary service items are issued, authorized, and redeemed; and

(xi) Any other internal audits as required by the Tribe, Tribal gaming regulatory authority, audit committee, or other entity designated by the Tribe.

(2) In addition to the observation and examinations performed under paragraph (b)(1) of this section, follow-up observations and examinations shall be performed to verify that corrective action has been taken regarding all instances of noncompliance cited by internal audit, the independent accountant, and/or the Commission. The verification shall be performed within six (6) months following the date of notification.

(3) Whenever possible, internal audit observations shall be performed on an unannounced basis (i.e., without the employees being forewarned that their activities will be observed). Additionally, if the independent accountant also performs the internal audit function, the accountant shall perform separate observations of the table games/gaming machine drops and counts to satisfy the internal audit observation requirements and independent accountant tests of controls as required by the American Institute of Certified Public Accountants guide.

(c) *Documentation.* (1) Documentation (e.g., checklists, programs, reports, etc.) shall be prepared to evidence all internal audit work performed as it relates to the requirements in this section, including all instances of noncompliance.

(2) The internal audit department shall operate with audit programs, which, at a minimum, address the MICS. Additionally, the department shall properly document the work performed, the conclusions reached, and the resolution of all exceptions. Institute of Internal Auditors standards are recommended but not required.

(d) *Reports.* (1) Reports documenting audits performed shall be maintained and made available to the Commission upon request.

(2) Such audit reports shall include the following information:

(i) Audit objectives;

(ii) Audit procedures and scope;

(iii) Findings and conclusions;

(iv) Recommendations, if applicable; and

(v) Management's response.

(e) *Material exceptions.* All material exceptions resulting from internal audit work shall be investigated and resolved with the results of such being documented and retained for five years.

(f) *Role of management.* (1) Internal audit findings shall be reported to management.

(2) Management shall be required to respond to internal audit findings stating corrective measures to be taken to avoid recurrence of the audit exception.

(3) Such management responses shall be included in the internal audit report that will be delivered to management, the Tribe, Tribal gaming regulatory authority, audit committee, or other entity designated by the Tribe.

§ 542.33 What are the minimum internal control standards for surveillance for Tier B gaming operations?

(a) The surveillance system shall be maintained and operated from a staffed surveillance room and shall provide surveillance over gaming areas.

(b) The entrance to the surveillance room shall be located so that it is not readily accessible by either gaming operation employees who work primarily on the casino floor, or the general public.

(c) Access to the surveillance room shall be limited to surveillance personnel, designated employees, and other persons authorized in accordance with the surveillance department policy. Such policy shall be approved by the Tribal gaming regulatory authority. The surveillance department shall maintain a sign-in log of other authorized persons entering the surveillance room.

(d) Surveillance room equipment shall have total override capability over all other satellite surveillance equipment located outside the surveillance room.

(e) The surveillance system shall include date and time generators that possess the capability to display the date and time of recorded events on video and/or digital recordings. The displayed date and time shall not significantly obstruct the recorded view.

(f) The surveillance department shall strive to ensure staff is trained in the use of the equipment, knowledge of the games, and house rules.

(g) Each camera required by the standards in this section shall be installed in a manner that will prevent it from being readily obstructed, tampered with, or disabled by customers or employees.

(h) Each camera required by the standards in this section shall possess the capability of having its picture

displayed on a monitor and recorded. The surveillance system shall include sufficient numbers of monitors and recorders to simultaneously display and record multiple gaming and count room activities, and record the views of all dedicated cameras and motion activated dedicated cameras.

(i) Reasonable effort shall be made to repair each malfunction of surveillance system equipment required by the standards in this section within seventy-two (72) hours after the malfunction is discovered. The Tribal gaming regulatory authority shall be notified of any camera(s) that has malfunctioned for more than twenty-four (24) hours.

(1) In the event of a dedicated camera malfunction, the gaming operation and/or surveillance department shall immediately provide alternative camera coverage or other security measures, such as additional supervisory or security personnel, to protect the subject activity.

(2) [Reserved]

(j) *Bingo.* (1) The surveillance system shall possess the capability to monitor the bingo ball drawing device or random number generator, which shall be recorded during the course of the draw by a dedicated camera with sufficient clarity to identify the balls drawn or numbers selected.

(2) The surveillance system shall monitor and record the game board and the activities of the employees responsible for drawing, calling, and entering the balls drawn or numbers selected.

(k) *Card games.* The surveillance system shall monitor and record general activities in each card room with sufficient clarity to identify the employees performing the different functions.

(l) *Progressive card games.* (1) Progressive card games with a progressive jackpot of $25,000 or more shall be monitored and recorded by dedicated cameras that provide coverage of:

(i) The table surface, sufficient that the card values and card suits can be clearly identified;

(ii) An overall view of the entire table with sufficient clarity to identify customers and dealer; and

(iii) A view of the posted jackpot amount.

(2) [Reserved]

(m) *Keno.* (1) The surveillance system shall possess the capability to monitor the keno ball-drawing device or random number generator, which shall be recorded during the course of the draw by a dedicated camera with sufficient clarity to identify the balls drawn or numbers selected.

(2) The surveillance system shall monitor and record general activities in each keno game area with sufficient clarity to identify the employees performing the different functions.

(n) *Pari-mutuel.* The surveillance system shall monitor and record general activities in the pari-mutuel area, to include the ticket writer and cashier areas, with sufficient clarity to identify the employees performing the different functions.

(o) *Table games.* (1) *Operations with four (4) or more table games.* Except as otherwise provided in paragraphs (o)(3), (o)(4), and (o)(5) of this section, the surveillance system of gaming operations operating four (4) or more table games shall provide at a minimum one (1) pan-tilt-zoom camera per two (2) tables and surveillance must be capable of taping:

(i) With sufficient clarity to identify customers and dealers; and

(ii) With sufficient coverage and clarity to simultaneously view the table bank and determine the configuration of wagers, card values, and game outcome.

(iii) One (1) dedicated camera per table and one (1) pan-tilt-zoom camera per four (4) tables may be an acceptable alternative procedure to satisfy the requirements of this paragraph.

(2) *Operations with three (3) or fewer table games.* The surveillance system of gaming operations operating three (3) or fewer table games shall:

(i) Comply with the requirements of paragraph (o)(1) of this section; or

(ii) Have one (1) overhead camera at each table.

(3) *Craps.* All craps tables shall have two (2) dedicated cross view cameras covering both ends of the table.

(4) *Roulette.* All roulette areas shall have one (1) overhead dedicated camera covering the roulette wheel and shall also have one (1) dedicated camera covering the play of the table.

(5) *Big wheel.* All big wheel games shall have one (1) dedicated camera viewing the wheel.

(p) *Progressive table games.* (1) Progressive table games with a progressive jackpot of $25,000 or more shall be monitored and recorded by dedicated cameras that provide coverage of:

(i) The table surface, sufficient that the card values and card suits can be clearly identified;

(ii) An overall view of the entire table with sufficient clarity to identify customers and dealer; and

(iii) A view of the progressive meter jackpot amount. If several tables are linked to the same progressive jackpot meter, only one meter need be recorded.

(2) [Reserved]

(q) *Gaming machines.* (1) Except as otherwise provided in paragraphs (q)(2) and (q)(3) of this section, gaming machines offering a payout of more than $250,000 shall be monitored and recorded by a dedicated camera(s) to provide coverage of:

(i) All customers and employees at the gaming machine, and

(ii) The face of the gaming machine, with sufficient clarity to identify the payout line(s) of the gaming machine.

(2) *In-house progressive machine.* In-house progressive gaming machines offering a base payout amount (jackpot reset amount) of more than $100,000 shall be monitored and recorded by a dedicated camera(s) to provide coverage of:

(i) All customers and employees at the gaming machine; and

(ii) The face of the gaming machine, with sufficient clarity to identify the payout line(s) of the gaming machine.

(3) *Wide-area progressive machine.* Wide-area progressive gaming machines offering a base payout amount of more than $1.5 million and monitored by an independent vendor utilizing an on-line progressive computer system shall be monitored and recorded by a dedicated camera(s) to provide coverage of:

(i) All customers and employees at the gaming machine; and

(ii) The face of the gaming machine, with sufficient clarity to identify the payout line(s) of the gaming machine.

(4) Notwithstanding paragraph (q)(1) of this section, if the gaming machine is a multi-game machine, the Tribal gaming regulatory authority, or the gaming operation subject to the approval of the Tribal gaming regulatory authority, may develop and implement alternative procedures to verify payouts.

(r) *Cage and vault.* (1) The surveillance system shall monitor and record a general overview of activities occurring in each cage and vault area with sufficient clarity to identify employees within the cage and customers and employees at the counter areas.

(2) Each cashier station shall be equipped with one (1) dedicated overhead camera covering the transaction area.

(3) The surveillance system shall provide an overview of cash transactions. This overview should include the customer, the employee, and the surrounding area.

(s) *Fills and credits.* (1) The cage or vault area in which fills and credits are transacted shall be monitored and recorded by a dedicated camera or motion activated dedicated camera that provides coverage with sufficient clarity

to identify the chip values and the amounts on the fill and credit slips.

(2) Controls provided by a computerized fill and credit system may be deemed an adequate alternative to viewing the fill and credit slips.

(t) *Currency and coin.* (1) The surveillance system shall monitor and record with sufficient clarity all areas where currency or coin may be stored or counted.

(2) The surveillance system shall provide for:

(i) Coverage of scales shall be sufficiently clear to view any attempted manipulation of the recorded data.

(ii) Monitoring and recording of the table game drop box storage rack or area by either a dedicated camera or a motion-detector activated camera.

(iii) Monitoring and recording of all areas where coin may be stored or counted, including the hard count room, all doors to the hard count room, all scales and wrapping machines, and all areas where uncounted coin may be stored during the drop and count process.

(iv) Monitoring and recording of soft count room, including all doors to the room, all table game drop boxes, safes, and counting surfaces, and all count team personnel. The counting surface area must be continuously monitored and recorded by a dedicated camera during the soft count.

(v) Monitoring and recording of all areas where currency is sorted, stacked, counted, verified, or stored during the soft count process.

(u) Change booths. The surveillance system shall monitor and record a general overview of the activities occurring in each gaming machine change booth.

(v) *Video recording and/or digital record retention.* (1) All video recordings and/or digital records of coverage provided by the dedicated cameras or motion-activated dedicated cameras required by the standards in this section shall be retained for a minimum of seven (7) days.

(2) Recordings involving suspected or confirmed gaming crimes, unlawful activity, or detentions by security personnel, must be retained for a minimum of thirty (30) days.

(3) Duly authenticated copies of video recordings and/or digital records shall be provided to the Commission upon request.

(w) *Video library log.* A video library log, or comparable alternative procedure approved by the Tribal gaming regulatory authority, shall be maintained to demonstrate compliance with the storage, identification, and retention standards required in this section.

(x) *Malfunction and repair log.* (1) Surveillance personnel shall maintain a log or alternative procedure approved by the Tribal gaming regulatory authority that documents each malfunction and repair of the surveillance system as defined in this section.

(2) The log shall state the time, date, and nature of each malfunction, the efforts expended to repair the malfunction, and the date of each effort, the reasons for any delays in repairing the malfunction, the date the malfunction is repaired, and where applicable, any alternative security measures that were taken.

(y) *Surveillance log.* (1) Surveillance personnel shall maintain a log of all surveillance activities.

(2) Such log shall be maintained by surveillance room personnel and shall be stored securely within the surveillance department.

(3) At a minimum, the following information shall be recorded in a surveillance log:

(i) Date;

(ii) Time commenced and terminated;

(iii) Activity observed or performed; and

(iv) The name or license credential number of each person who initiates, performs, or supervises the surveillance.

(4) Surveillance personnel shall also record a summary of the results of the surveillance of any suspicious activity. This summary may be maintained in a separate log.

§ 542.40 What is a Tier C gaming operation?

A Tier C gaming operation is one with annual gross gaming revenues of more than $15 million.

§ 542.41 What are the minimum internal control standards for drop and count for Tier C gaming operations?

(a) *Computer applications.* For any computer applications utilized, alternate documentation and/or procedures that provide at least the level of control described by the standards in this section, as approved by the Tribal gaming regulatory authority, will be acceptable.

(b) *Table game drop standards.*

(1) The setting out of empty table game drop boxes and the drop shall be a continuous process.

(2) At the end of each shift:

(i) All locked table game drop boxes shall be removed from the tables by a person independent of the pit shift being dropped;

(ii) A separate drop box shall be placed on each table opened at any time during each shift or a gaming operation may utilize a single drop box with separate openings and compartments for each shift; and

(iii) Upon removal from the tables, table game drop boxes shall be transported directly to the count room or other equivalently secure area with comparable controls and locked in a secure manner until the count takes place.

(3) If drop boxes are not placed on all tables, then the pit department shall document which tables were open during the shift.

(4) The transporting of table game drop boxes shall be performed by a minimum of two persons, at least one of whom is independent of the pit shift being dropped.

(5) All table game drop boxes shall be posted with a number corresponding to a permanent number on the gaming table and marked to indicate game, table number, and shift.

(6) Surveillance shall be notified when the drop is to begin so that surveillance may monitor the activities.

(c) *Soft count room personnel.* (1) The table game soft count and the gaming machine bill acceptor count shall be performed by a minimum of three employees.

(2) Count room personnel shall not be allowed to exit or enter the count room during the count except for emergencies or scheduled breaks. At no time during the count, shall there be fewer than three employees in the count room until the drop proceeds have been accepted into cage/vault accountability. Surveillance shall be notified whenever count room personnel exit or enter the count room during the count.

(3) Count team members shall be rotated on a routine basis such that the count team is not consistently the same three persons more than four (4) days per week. This standard shall not apply to gaming operations that utilize a count team of more than three persons.

(4) The count team shall be independent of transactions being reviewed and counted. The count team shall be independent of the cage/vault departments, however, an accounting representative may be used if there is an independent audit of all soft count documentation.

(d) *Table game soft count standards.* (1) The table game soft count shall be performed in a soft count room or other equivalently secure area with comparable controls.

(2) Access to the count room during the count shall be restricted to members of the drop and count teams, with the exception of authorized observers,

supervisors for resolution of problems, and authorized maintenance personnel.

(3) If counts from various revenue centers occur simultaneously in the count room, procedures shall be in effect that prevent the commingling of funds from different revenue centers.

(4) The table game drop boxes shall be individually emptied and counted in such a manner to prevent the commingling of funds between boxes until the count of the box has been recorded.

(i) The count of each box shall be recorded in ink or other permanent form of recordation.

(ii) A second count shall be performed by an employee on the count team who did not perform the initial count.

(iii) Corrections to information originally recorded by the count team on soft count documentation shall be made by drawing a single line through the error, writing the correct figure above the original figure, and then obtaining the initials of at least two count team members who verified the change.

(5) If currency counters are utilized and the count room table is used only to empty boxes and sort/stack contents, a count team member shall be able to observe the loading and unloading of all currency at the currency counter, including rejected currency.

(6) Table game drop boxes, when empty, shall be shown to another member of the count team, or to another person who is observing the count, or to surveillance, provided the count is monitored in its entirety by a person independent of the count.

(7) Orders for fill/credit (if applicable) shall be matched to the fill/credit slips. Fills and credits shall be traced to or recorded on the count sheet.

(8) Pit marker issue and payment slips (if applicable) removed from the table game drop boxes shall either be:

(i) Traced to or recorded on the count sheet by the count team; or

(ii) Totaled by shift and traced to the totals documented by the computerized system. Accounting personnel shall verify the issue/payment slip for each table is accurate.

(9) Foreign currency exchange forms (if applicable) removed from the table game drop boxes shall be reviewed for the proper daily exchange rate and the conversion amount shall be recomputed by the count team. Alternatively, this may be performed by accounting/auditing employees.

(10) The opening/closing table and marker inventory forms (if applicable) shall either be:

(i) Examined and traced to or recorded on the count sheet; or

(ii) If a computerized system is used, accounting personnel can trace the opening/closing table and marker inventory forms to the count sheet. Discrepancies shall be investigated with the findings documented and maintained for inspection.

(11) The count sheet shall be reconciled to the total drop by a count team member who shall not function as the sole recorder.

(12) All members of the count team shall sign the count document or a summary report to attest to their participation in the count.

(13) All drop proceeds and cash equivalents that were counted shall be turned over to the cage or vault cashier (who shall be independent of the count team) or to an authorized person/employee independent of the revenue generation and the count process for verification. Such person shall certify by signature as to the accuracy of the drop proceeds delivered and received.

(14) The count sheet, with all supporting documents, shall be delivered to the accounting department by a count team member or a person independent of the cashiers department. Alternatively, it may be adequately secured (*e.g.,* locked container to which only accounting personnel can gain access) until retrieved by the accounting department.

(15) Access to stored, full table game drop boxes shall be restricted to authorized members of the drop and count teams.

(e) *Gaming machine bill acceptor drop standards.* (1) A minimum of three employees shall be involved in the removal of the gaming machine drop, at least one of who is independent of the gaming machine department.

(2) All bill acceptor canisters shall be removed only at the time previously designated by the gaming operation and reported to the Tribal gaming regulatory authority, except for emergency drops.

(3) Surveillance shall be notified when the drop is to begin so that surveillance may monitor the activities.

(4) The bill acceptor canisters shall be removed by a person independent of the gaming machine department then transported directly to the count room or other equivalently secure area with comparable controls and locked in a secure manner until the count takes place.

(i) Security shall be provided over the bill acceptor canisters removed from the gaming machines and awaiting transport to the count room.

(ii) The transporting of bill acceptor canisters shall be performed by a minimum of two persons, at least one of who is independent of the gaming machine department.

(5) All bill acceptor canisters shall be posted with a number corresponding to a permanent number on the gaming machine.

(f) *Gaming machine bill acceptor count standards.* (1) The gaming machine bill acceptor count shall be performed in a soft count room or other equivalently secure area with comparable controls.

(2) Access to the count room during the count shall be restricted to members of the drop and count teams, with the exception of authorized observers, supervisors for resolution of problems, and authorized maintenance personnel.

(3) If counts from various revenue centers occur simultaneously in the count room, procedures shall be in effect that prevent the commingling of funds from different revenue centers.

(4) The bill acceptor canisters shall be individually emptied and counted in such a manner to prevent the commingling of funds between canisters until the count of the canister has been recorded.

(i) The count of each canister shall be recorded in ink or other permanent form of recordation.

(ii) A second count shall be performed by an employee on the count team who did not perform the initial count.

(iii) Corrections to information originally recorded by the count team on soft count documentation shall be made by drawing a single line through the error, writing the correct figure above the original figure, and then obtaining the initials of at least two count team members who verified the change.

(5) If currency counters are utilized and the count room table is used only to empty canisters and sort/stack contents, a count team member shall be able to observe the loading and unloading of all currency at the currency counter, including rejected currency.

(6) Canisters, when empty, shall be shown to another member of the count team, or to another person who is observing the count, or to surveillance, provided that the count is monitored in its entirety by a person independent of the count.

(7) The count sheet shall be reconciled to the total drop by a count team member who shall not function as the sole recorder.

(8) All members of the count team shall sign the count document or a summary report to attest to their participation in the count.

(9) All drop proceeds and cash equivalents that were counted shall be

turned over to the cage or vault cashier (who shall be independent of the count team) or to an authorized person/employee independent of the revenue generation and the count process for verification. Such person shall certify by signature as to the accuracy of the drop proceeds delivered and received.

(10) The count sheet, with all supporting documents, shall be delivered to the accounting department by a count team member or a person independent of the cashiers department. Alternatively, it may be adequately secured (e.g., locked container to which only accounting personnel can gain access) until retrieved by the accounting department.

(11) Access to stored bill acceptor canisters, full or empty, shall be restricted to:

(i) Authorized members of the drop and count teams; and

(ii) Authorized personnel in an emergency for the resolution of a problem.

(12) All bill acceptor canisters shall be posted with a number corresponding to a permanent number on the gaming machine.

(g) *Gaming machine coin drop standards.* (1) A minimum of three employees shall be involved in the removal of the gaming machine drop, at least one of who is independent of the gaming machine department.

(2) All drop buckets shall be removed only at the time previously designated by the gaming operation and reported to the Tribal gaming regulatory authority, except for emergency drops.

(3) Surveillance shall be notified when the drop is to begin in order that surveillance may monitor the activities.

(4) Security shall be provided over the buckets removed from the gaming machine drop cabinets and awaiting transport to the count room.

(5) As each machine is opened, the contents shall be tagged with its respective machine number if the bucket is not permanently marked with the machine number. The contents shall be transported directly to the area designated for the counting of such drop proceeds. If more than one trip is required to remove the contents of the machines, the filled carts of coins shall be securely locked in the room designed for counting or in another equivalently secure area with comparable controls. There shall be a locked covering on any carts in which the drop route includes passage out of doors.

(i) Alternatively, a smart bucket system that electronically identifies and tracks the gaming machine number, and facilitates the proper recognition of gaming revenue, shall satisfy the requirements of this paragraph.

(ii) [Reserved]

(6) Each drop bucket in use shall be:

(i) Housed in a locked compartment separate from any other compartment of the gaming machine and keyed differently than other gaming machine compartments; and

(ii) Identifiable to the gaming machine from which it is removed. If the gaming machine is identified with a removable tag that is placed in the bucket, the tag shall be placed on top of the bucket when it is collected.

(7) Each gaming machine shall have drop buckets into which coins or tokens that are retained by the gaming machine are collected. Drop bucket contents shall not be used to make change or pay hand-paid payouts.

(8) The collection procedures may include procedures for dropping gaming machines that have trays instead of drop buckets.

(h) *Hard count room personnel.* (1) The weigh/count shall be performed by a minimum of three employees.

(2) At no time during the weigh/count shall there be fewer than three employees in the count room until the drop proceeds have been accepted into cage/vault accountability. Surveillance shall be notified whenever count room personnel exit or enter the count room during the count.

(i) If the gaming machine count is conducted with a continuous mechanical count meter that is not reset during the count and is verified in writing by at least three employees at the start and end of each denomination count, then one employee may perform the wrap.

(ii) [Reserved]

(3) Count team members shall be rotated on a routine basis such that the count team is not consistently the same three persons more than four (4) days per week. This standard shall not apply to gaming operations that utilize a count team of more than three persons.

(4) The count team shall be independent of transactions being reviewed and counted. The count team shall be independent of the cage/vault departments, unless they are non-supervisory gaming machine employees and perform the laborer function only (A non-supervisory gaming machine employee is defined as a person below the level of gaming machine shift supervisor). A cage cashier may be used if this person is not allowed to perform the recording function. An accounting representative may be used if there is an independent audit of all count documentation.

(i) *Gaming machine coin count and wrap standards.* (1) Coins shall include tokens.

(2) The gaming machine coin count and wrap shall be performed in a count room or other equivalently secure area with comparable controls.

(i) Alternatively, an on-the-floor drop system utilizing a mobile scale shall satisfy the requirements of this paragraph, subject to the following conditions:

(A) The gaming operation shall utilize and maintain an effective on-line gaming machine monitoring system, as described in § 542.13(m)(3);

(B) Components of the on-the-floor drop system shall include, but not be limited to, a weigh scale, a laptop computer through which weigh/count applications are operated, a security camera available for the mobile scale system, and a VCR to be housed within the video compartment of the mobile scale. The system may include a mule cart used for mobile weigh scale system locomotion.

(C) The gaming operation must obtain the security camera available with the system, and this camera must be added in such a way as to eliminate tampering.

(D) Prior to the drop, the drop/count team shall ensure the scale batteries are charged;

(E) Prior to the drop, a videotape shall be inserted into the VCR used to record the drop in conjunction with the security camera system and the VCR shall be activated;

(F) The weigh scale test shall be performed prior to removing the unit from the hard count room for the start of the weigh/drop/count;

(G) Surveillance shall be notified when the weigh/drop/count begins and shall be capable of monitoring the entire process;

(H) An observer independent of the weigh/drop/count teams (independent observer) shall remain by the weigh scale at all times and shall observe the entire weigh/drop/count process;

(I) Physical custody of the key(s) needed to access the laptop and video compartment shall require the involvement of two persons, one of whom is independent of the drop and count team;

(J) The mule key (if applicable), the laptop and video compartment keys, and the remote control for the VCR shall be maintained by a department independent of the gaming machine department. The appropriate personnel shall sign out these keys;

(K) A person independent of the weigh/drop/count teams shall be required to accompany these keys while

they are checked out, and observe each time the laptop compartment is opened;

(L) The laptop access panel shall not be opened outside the hard count room, except in instances when the laptop must be rebooted as a result of a crash, lock up, or other situation requiring immediate corrective action;

(M) User access to the system shall be limited to those employees required to have full or limited access to complete the weigh/drop/count; and

(N) When the weigh/drop/count is completed, the independent observer shall access the laptop compartment, end the recording session, eject the videotape, and deliver the videotape to surveillance.

(ii) [Reserved]

(3) Access to the count room during the count shall be restricted to members of the drop and count teams, with the exception of authorized observers, supervisors for resolution of problems, and authorized maintenance personnel.

(4) If counts from various revenue centers occur simultaneously in the count room, procedures shall be in effect that prevent the commingling of funds from different revenue centers.

(5) The following functions shall be performed in the counting of the gaming machine drop:

(i) Recorder function, which involves the recording of the gaming machine count; and

(ii) Count team supervisor function, which involves the control of the gaming machine weigh and wrap process. The supervisor shall not perform the initial recording of the weigh/count unless a weigh scale with a printer is used.

(6) The gaming machine drop shall be counted, wrapped, and reconciled in such a manner to prevent the commingling of gaming machine drop coin with coin (for each denomination) from the next gaming machine drop until the count of the gaming machine drop has been recorded. If the coins are not wrapped immediately after being weighed or counted, they shall be secured and not commingled with other coin.

(i) The amount of the gaming machine drop from each machine shall be recorded in ink or other permanent form of recordation on a gaming machine count document by the recorder or mechanically printed by the weigh scale.

(ii) Corrections to information originally recorded by the count team on gaming machine count documentation shall be made by drawing a single line through the error, writing the correct figure above the original figure, and then obtaining the initials of at least two count team members who verified the change.

(A) If a weigh scale interface is used, corrections to gaming machine count data shall be made using either of the following:

(*1*) Drawing a single line through the error on the gaming machine document, writing the correct figure above the original figure, and then obtaining the initials of at least two count team employees. If this procedure is used, an employee independent of the gaming machine department and count team shall enter the correct figure into the computer system prior to the generation of related gaming machine reports; or

(*2*) During the count process, correct the error in the computer system and enter the passwords of at least two count team employees. If this procedure is used, an exception report shall be generated by the computer system identifying the gaming machine number, the error, the correction, and the count team employees attesting to the correction.

(B) [Reserved]

(7) If applicable, the weight shall be converted to dollar amounts before the reconciliation of the weigh to the wrap.

(8) If a coin meter is used, a count team member shall convert the coin count for each denomination into dollars and shall enter the results on a summary sheet.

(9) The recorder and at least one other count team member shall sign the weigh tape and the gaming machine count document attesting to the accuracy of the weigh/count.

(10) All members of the count team shall sign the count document or a summary report to attest to their participation in the count.

(11) All drop proceeds and cash equivalents that were counted shall be turned over to the cage or vault cashier (who shall be independent of the count team) or to an authorized person/employee independent of the revenue generation and the count process for verification. Such person shall certify by signature as to the accuracy of the drop proceeds delivered and received.

(12) All gaming machine count and wrap documentation, including any applicable computer storage media, shall be delivered to the accounting department by a count team member or a person independent of the cashier's department. Alternatively, it may be adequately secured (*e.g.,* locked container to which only accounting personnel can gain access) until retrieved by the accounting department.

(13) If the coins are transported off the property, a second (alternative) count procedure shall be performed before the coins leave the property. Any variances shall be documented.

(14) Variances. Large (by denomination, either $1,000 or 2% of the drop, whichever is less) or unusual (*e.g.,* zero for weigh/count or patterned for all counts) variances between the weigh/count and wrap shall be investigated by management personnel independent of the gaming machine department, count team, and the cage/vault functions on a timely basis. The results of such investigation shall be documented, maintained for inspection, and provided to the Tribal gaming regulatory authority upon request.

(j) *Security of the count room inventory during the gaming machine coin count and wrap.* (1) If the count room serves as a coin room and coin room inventory is not secured so as to preclude access by the count team, then the following standards shall apply:

(i) At the commencement of the gaming machine count the following requirements shall be met:

(A) The coin room inventory shall be counted by at least two employees, one of whom is a member of the count team and the other is independent of the weigh/count and wrap procedures;

(B) The count in paragraph (j)(1)(i)(A) of this section shall be recorded on an appropriate inventory form;

(ii) Upon completion of the wrap of the gaming machine drop:

(A) At least two members of the count team (wrap team), independently from each other, shall count the ending coin room inventory;

(B) The counts in paragraph (j)(1)(ii)(A) of this section shall be recorded on a summary report(s) that evidences the calculation of the final wrap by subtracting the beginning inventory from the sum of the ending inventory and transfers in and out of the coin room;

(C) The same count team members shall compare the calculated wrap to the weigh/count, recording the comparison and noting any variances on the summary report;

(D) A member of the cage/vault department shall count the ending coin room inventory by denomination and shall reconcile it to the beginning inventory, wrap, transfers, and weigh/count; and

(E) At the conclusion of the reconciliation, at least two count/wrap team members and the verifying employee shall sign the summary report(s) attesting to its accuracy.

(2) If the count room is segregated from the coin room, or if the coin room is used as a count room and the coin room inventory is secured to preclude access by the count team, all of the

following requirements shall be completed, at the conclusion of the count:

(i) At least two members of the count/wrap team shall count the final wrapped gaming machine drop independently from each other;

(ii) The counts shall be recorded on a summary report;

(iii) The same count team members (or the accounting department) shall compare the final wrap to the weigh/count, recording the comparison and noting any variances on the summary report;

(iv) A member of the cage/vault department shall count the wrapped gaming machine drop by denomination and reconcile it to the weigh/count;

(v) At the conclusion of the reconciliation, at least two count team members and the cage/vault employee shall sign the summary report attesting to its accuracy; and

(vi) The wrapped coins (exclusive of proper transfers) shall be transported to the cage, vault or coin vault after the reconciliation of the weigh/count to the wrap.

(k) *Transfers during the gaming machine coin count and wrap.* (1) Transfers may be permitted during the count and wrap only if permitted under the internal control standards approved by the Tribal gaming regulatory authority.

(2) Each transfer shall be recorded on a separate multi-part form with a preprinted or concurrently-printed form number (used solely for gaming machine count transfers) that shall be subsequently reconciled by the accounting department to ensure the accuracy of the reconciled gaming machine drop.

(3) Each transfer must be counted and signed for by at least two members of the count team and by a person independent of the count team who is responsible for authorizing the transfer.

(l) *Gaming machine drop key control standards.* (1) Gaming machine coin drop cabinet keys, including duplicates, shall be maintained by a department independent of the gaming machine department.

(2) The physical custody of the keys needed to access gaming machine coin drop cabinets, including duplicates, shall require the involvement of two persons, one of whom is independent of the gaming machine department.

(3) Two employees (separate from key custodian) shall be required to accompany such keys while checked out and observe each time gaming machine drop cabinets are accessed, unless surveillance is notified each time keys are checked out and surveillance observes the person throughout the period the keys are checked out.

(m) *Table game drop box key control standards.* (1) Procedures shall be developed and implemented to insure that unauthorized access to empty table game drop boxes shall not occur from the time the boxes leave the storage racks until they are placed on the tables.

(2) The involvement of at least two persons independent of the cage department shall be required to access stored empty table game drop boxes.

(3) The release keys shall be separately keyed from the contents keys.

(4) At least three (two for table game drop box keys in operations with three tables or fewer) count team members are required to be present at the time count room and other count keys are issued for the count.

(5) All duplicate keys shall be maintained in a manner that provides the same degree of control as is required for the original keys. Records shall be maintained for each key duplicated that indicate the number of keys made and destroyed.

(6) Logs shall be maintained by the custodian of sensitive keys to document authorization of personnel accessing keys.

(n) *Table game drop box release keys.* (1) The table game drop box release keys shall be maintained by a department independent of the pit department.

(2) Only the person(s) authorized to remove table game drop boxes from the tables shall be allowed access to the table game drop box release keys; however, the count team members may have access to the release keys during the soft count in order to reset the table game drop boxes.

(3) Persons authorized to remove the table game drop boxes shall be precluded from having simultaneous access to the table game drop box contents keys and release keys.

(4) For situations requiring access to a table game drop box at a time other than the scheduled drop, the date, time, and signature of employee signing out/in the release key must be documented.

(o) *Bill acceptor canister release keys.* (1) The bill acceptor canister release keys shall be maintained by a department independent of the gaming machine department.

(2) Only the person(s) authorized to remove bill acceptor canisters from the gaming machines shall be allowed access to the release keys.

(3) Persons authorized to remove the bill acceptor canisters shall be precluded from having simultaneous access to the bill acceptor canister contents keys and release keys.

(4) For situations requiring access to a bill acceptor canister at a time other than the scheduled drop, the date, time, and signature of employee signing out/in the release key must be documented.

(p) *Table game drop box storage rack keys.* (1) A person independent of the pit department shall be required to accompany the table game drop box storage rack keys and observe each time table game drop boxes are removed from or placed in storage racks.

(2) Persons authorized to obtain table game drop box storage rack keys shall be precluded from having simultaneous access to table game drop box contents keys with the exception of the count team.

(q) *Bill acceptor canister storage rack keys.* (1) A person independent of the gaming machine department shall be required to accompany the bill acceptor canister storage rack keys and observe each time canisters are removed from or placed in storage racks.

(2) Persons authorized to obtain bill acceptor canister storage rack keys shall be precluded from having simultaneous access to bill acceptor canister contents keys with the exception of the count team.

(r) *Table game drop box contents keys.* (1) The physical custody of the keys needed for accessing stored, full table game drop box contents shall require the involvement of persons from at least two separate departments, with the exception of the count team.

(2) Access to the table game drop box contents key at other than scheduled count times shall require the involvement of at least three persons from separate departments, including management. The reason for access shall be documented with the signatures of all participants and observers.

(3) Only count team members shall be allowed access to table game drop box content keys during the count process.

(s) *Bill acceptor canister contents keys.* (1) The physical custody of the keys needed for accessing stored, full bill acceptor canister contents shall require involvement of persons from two separate departments, with the exception of the count team.

(2) Access to the bill acceptor canister contents key at other than scheduled count times shall require the involvement of at least three persons from separate departments, one of whom must be a supervisor. The reason for access shall be documented with the signatures of all participants and observers.

(3) Only the count team members shall be allowed access to bill acceptor canister contents keys during the count process.

(t) *Emergency drop procedures.* Emergency drop procedures shall be developed by the Tribal gaming regulatory authority, or the gaming operation as approved by the Tribal gaming regulatory authority.

(u) *Equipment standards for gaming machine count.* (1) A weigh scale calibration module shall be secured so as to prevent unauthorized access (e.g., prenumbered seal, lock and key, etc.).

(2) A person independent of the cage, vault, gaming machine, and count team functions shall be required to be present whenever the calibration module is accessed. Such access shall be documented and maintained.

(3) If a weigh scale interface is used, it shall be adequately restricted so as to prevent unauthorized access (passwords, keys, etc.).

(4) If the weigh scale has a zero adjustment mechanism, it shall be physically limited to minor adjustments (*e.g.,* weight of a bucket) or physically situated such that any unnecessary adjustments to it during the weigh process would be observed by other count team members.

(5) The weigh scale and weigh scale interface (if applicable) shall be tested by a person or persons independent of the cage, vault, and gaming machine departments and count team at least quarterly. At least annually, this test shall be performed by internal audit in accordance with the internal audit standards. The result of these tests shall be documented and signed by the person or persons performing the test.

(6) Prior to the gaming machine count, at least two employees shall verify the accuracy of the weigh scale with varying weights or with varying amounts of previously counted coin for each denomination to ensure the scale is properly calibrated (varying weights/coin from drop to drop is acceptable).

(7) If a mechanical coin counter is used (instead of a weigh scale), the Tribal gaming regulatory authority, or the gaming operation as approved by the Tribal gaming regulatory authority, shall establish and the gaming operation shall comply with procedures that are equivalent to those described in paragraphs (u)(4), (u)(5), and (u)(6) of this section.

(8) If a coin meter count machine is used, the count team member shall record the machine number denomination and number of coins in ink on a source document, unless the meter machine automatically records such information.

(i) A count team member shall test the coin meter count machine before the actual count to ascertain if the metering device is functioning properly with a predetermined number of coins for each denomination.

(ii) [Reserved]

§ 542.42 What are the minimum internal control standards for internal audit for Tier C gaming operations?

(a) *Internal audit personnel.* (1) For Tier C gaming operations, a separate internal audit department shall be maintained whose primary function is performing internal audit work and that is independent with respect to the departments subject to audit.

(2) The internal audit personnel shall report directly to the Tribe, Tribal gaming regulatory authority, audit committee, or other entity designated by the Tribe in accordance with the definition of internal audit in § 542.2.

(b) *Audits.* (1) Internal audit personnel shall perform audits of all major gaming areas of the gaming operation. The following shall be reviewed at least annually:

(i) Bingo, including but not limited to, bingo card control, payout procedures, and cash reconciliation process;

(ii) Pull tabs, including but not limited to, statistical records, winner verification, perpetual inventory, and accountability of sales versus inventory;

(iii) Card games, including but not limited to, card games operation, cash exchange procedures, shill transactions, and count procedures;

(iv) Keno, including but not limited to, game write and payout procedures, sensitive key location and control, and a review of keno auditing procedures;

(v) Pari-mutual wagering, including write and payout procedures, and pari-mutual auditing procedures;

(vi) Table games, including but not limited to, fill and credit procedures, pit credit play procedures, rim credit procedures, soft drop/count procedures and the subsequent transfer of funds, unannounced testing of count room currency counters and/or currency interface, location and control over sensitive keys, the tracing of source documents to summarized documentation and accounting records, and reconciliation to restricted copies;

(vii) Gaming machines, including but not limited to, jackpot payout and gaming machine fill procedures, gaming machine drop/count and bill acceptor drop/count and subsequent transfer of funds, unannounced testing of weigh scale and weigh scale interface, unannounced testing of count room currency counters and/or currency interface, gaming machine drop cabinet access, tracing of source documents to summarized documentation and accounting records, reconciliation to restricted copies, location and control over sensitive keys, compliance with EPROM duplication procedures, and compliance with MICS procedures for gaming machines that accept currency or coin(s) and issue cash-out tickets or gaming machines that do not accept currency or coin(s) and do not return currency or coin(s);

(viii) Cage and credit procedures including all cage, credit, and collection procedures, and the reconciliation of trial balances to physical instruments on a sample basis. Cage accountability shall be reconciled to the general ledger;

(ix) Information technology functions, including review for compliance with information technology standards;

(x) Complimentary service or item, including but not limited to, procedures whereby complimentary service items are issued, authorized, and redeemed; and

(xi) Any other internal audits as required by the Tribe, Tribal gaming regulatory authority, audit committee, or other entity designated by the Tribe.

(2) In addition to the observation and examinations performed under paragraph (b)(1) of this section, follow-up observations and examinations shall be performed to verify that corrective action has been taken regarding all instances of noncompliance cited by internal audit, the independent accountant, and/or the Commission. The verification shall be performed within six (6) months following the date of notification.

(3) Whenever possible, internal audit observations shall be performed on an unannounced basis (i.e., without the employees being forewarned that their activities will be observed). Additionally, if the independent accountant also performs the internal audit function, the accountant shall perform separate observations of the table games/gaming machine drops and counts to satisfy the internal audit observation requirements and independent accountant tests of controls as required by the American Institute of Certified Public Accountants guide.

(c) *Documentation.* (1) Documentation (*e.g.,* checklists, programs, reports, etc.) shall be prepared to evidence all internal audit work performed as it relates to the requirements in this section, including all instances of noncompliance.

(2) The internal audit department shall operate with audit programs, which, at a minimum, address the MICS. Additionally, the department shall properly document the work performed, the conclusions reached, and the resolution of all exceptions. Institute of Internal Auditors standards are recommended but not required.

(d) *Reports.* (1) Reports documenting audits performed shall be maintained and made available to the Commission upon request.

(2) Such audit reports shall include the following information:

(i) Audit objectives;

(ii) Audit procedures and scope;

(iii) Findings and conclusions;

(iv) Recommendations, if applicable; and

(v) Management's response.

(e) *Material exceptions.* All material exceptions resulting from internal audit work shall be investigated and resolved with the results of such being documented and retained for five years.

(f) *Role of management.* (1) Internal audit findings shall be reported to management.

(2) Management shall be required to respond to internal audit findings stating corrective measures to be taken to avoid recurrence of the audit exception.

(3) Such management responses shall be included in the internal audit report that will be delivered to management, the Tribe, Tribal gaming regulatory authority, audit committee, or other entity designated by the Tribe.

§ 542.43 What are the minimum internal control standards for surveillance for a Tier C gaming operation?

(a) The surveillance system shall be maintained and operated from a staffed surveillance room and shall provide surveillance over gaming areas.

(b) The entrance to the surveillance room shall be located so that it is not readily accessible by either gaming operation employees who work primarily on the casino floor, or the general public.

(c) Access to the surveillance room shall be limited to surveillance personnel, designated employees, and other persons authorized in accordance with the surveillance department policy. Such policy shall be approved by the Tribal gaming regulatory authority. The surveillance department shall maintain a sign-in log of other authorized persons entering the surveillance room.

(d) Surveillance room equipment shall have total override capability over all other satellite surveillance equipment located outside the surveillance room.

(e) In the event of power loss to the surveillance system, an auxiliary or backup power source shall be available and capable of providing immediate restoration of power to all elements of the surveillance system that enable surveillance personnel to observe the table games remaining open for play and all areas covered by dedicated cameras. Auxiliary or backup power sources such as a UPS System, backup generator, or an alternate utility supplier, satisfy this requirement.

(f) The surveillance system shall include date and time generators that possess the capability to display the date and time of recorded events on video and/or digital recordings. The displayed date and time shall not significantly obstruct the recorded view.

(g) The surveillance department shall strive to ensure staff is trained in the use of the equipment, knowledge of the games, and house rules.

(h) Each camera required by the standards in this section shall be installed in a manner that will prevent it from being readily obstructed, tampered with, or disabled by customers or employees.

(i) Each camera required by the standards in this section shall possess the capability of having its picture displayed on a monitor and recorded. The surveillance system shall include sufficient numbers of monitors and recorders to simultaneously display and record multiple gaming and count room activities, and record the views of all dedicated cameras and motion activated dedicated cameras.

(j) Reasonable effort shall be made to repair each malfunction of surveillance system equipment required by the standards in this section within seventy-two (72) hours after the malfunction is discovered. The Tribal gaming regulatory authority shall be notified of any camera(s) that has malfunctioned for more than twenty-four (24) hours.

(1) In the event of a dedicated camera malfunction, the gaming operation and/or the surveillance department shall immediately provide alternative camera coverage or other security measures, such as additional supervisory or security personnel, to protect the subject activity.

(2) [Reserved]

(k) *Bingo.* (1) The surveillance system shall possess the capability to monitor the bingo ball drawing device or random number generator, which shall be recorded during the course of the draw by a dedicated camera with sufficient clarity to identify the balls drawn or numbers selected.

(2) The surveillance system shall monitor and record the game board and the activities of the employees responsible for drawing, calling, and entering the balls drawn or numbers selected.

(l) *Card games.* The surveillance system shall monitor and record general activities in each card room with sufficient clarity to identify the employees performing the different functions.

(m) *Progressive card games.* (1) Progressive card games with a progressive jackpot of $25,000 or more shall be monitored and recorded by dedicated cameras that provide coverage of:

(i) The table surface, sufficient that the card values and card suits can be clearly identified;

(ii) An overall view of the entire table with sufficient clarity to identify customers and dealer; and

(iii) A view of the posted jackpot amount.

(2) [Reserved]

(n) *Keno.* (1) The surveillance system shall possess the capability to monitor the keno ball-drawing device or random number generator, which shall be recorded during the course of the draw by a dedicated camera with sufficient clarity to identify the balls drawn or numbers selected.

(2) The surveillance system shall monitor and record general activities in each keno game area with sufficient clarity to identify the employees performing the different functions.

(o) *Pari-mutuel.* The surveillance system shall monitor and record general activities in the pari-mutuel area, to include the ticket writer and cashier areas, with sufficient clarity to identify the employees performing the different functions.

(p) *Table games.* (1) *Operations with four (4) or more table games.* Except as otherwise provided in paragraphs (p)(3), (p)(4), and (p)(5) of this section, the surveillance system of gaming operations operating four (4) or more table games shall provide at a minimum one (1) pan-tilt-zoom camera per two (2) tables and surveillance must be capable of taping:

(i) With sufficient clarity to identify customers and dealers; and

(ii) With sufficient coverage and clarity to simultaneously view the table bank and determine the configuration of wagers, card values, and game outcome.

(iii) One (1) dedicated camera per table and one (1) pan-tilt-zoom camera per four (4) tables may be an acceptable alternative procedure to satisfy the requirements of this paragraph.

(2) *Operations with three (3) or fewer table games.* The surveillance system of gaming operations operating three (3) or fewer table games shall:

(i) Comply with the requirements of paragraph (p)(1) of this section; or

(ii) Have one (1) overhead camera at each table.

(3) *Craps.* All craps tables shall have two (2) dedicated cross view cameras covering both ends of the table.

(4) *Roulette.* All roulette areas shall have one (1) overhead dedicated camera covering the roulette wheel and shall also have one (1) dedicated camera covering the play of the table.

(5) *Big wheel.* All big wheel games shall have one (1) dedicated camera viewing the wheel.

(q) *Progressive table games.* (1) Progressive table games with a progressive jackpot of $25,000 or more shall be monitored and recorded by dedicated cameras that provide coverage of:

(i) The table surface, sufficient that the card values and card suits can be clearly identified;

(ii) An overall view of the entire table with sufficient clarity to identify customers and dealer; and

(iii) A view of the progressive meter jackpot amount. If several tables are linked to the same progressive jackpot meter, only one meter need be recorded.

(2) [Reserved]

(r) *Gaming machines.* (1) Except as otherwise provided in paragraphs (r)(2) and (r)(3) of this section, gaming machines offering a payout of more than $250,000 shall be monitored and recorded by a dedicated camera(s) to provide coverage of:

(i) All customers and employees at the gaming machine, and

(ii) The face of the gaming machine, with sufficient clarity to identify the payout line(s) of the gaming machine.

(2) *In-house progressive machine.* In-house progressive gaming machines offering a base payout amount (jackpot reset amount) of more than $100,000 shall be monitored and recorded by a dedicated camera(s) to provide coverage of:

(i) All customers and employees at the gaming machine; and

(ii) The face of the gaming machine, with sufficient clarity to identify the payout line(s) of the gaming machine.

(3) *Wide-area progressive machine.* Wide-area progressive gaming machines offering a base payout amount of more than $1.5 million and monitored by an independent vendor utilizing an on-line progressive computer system shall be monitored and recorded by a dedicated camera(s) to provide coverage of:

(i) All customers and employees at the gaming machine; and

(ii) The face of the gaming machine, with sufficient clarity to identify the payout line(s) of the gaming machine.

(4) Notwithstanding paragraph (r)(1) of this section, if the gaming machine is a multi-game machine, the Tribal gaming regulatory authority, or the gaming operation subject to the approval of the Tribal gaming regulatory authority, may develop and implement alternative procedures to verify payouts.

(s) *Cage and vault.* (1) The surveillance system shall monitor and record a general overview of activities occurring in each cage and vault area with sufficient clarity to identify employees within the cage and customers and employees at the counter areas.

(2) Each cashier station shall be equipped with one (1) dedicated overhead camera covering the transaction area.

(3) The surveillance system shall provide an overview of cash transactions. This overview should include the customer, the employee, and the surrounding area.

(t) *Fills and credits.* (1) The cage or vault area in which fills and credits are transacted shall be monitored and recorded by a dedicated camera or motion activated dedicated camera that provides coverage with sufficient clarity to identify the chip values and the amounts on the fill and credit slips.

(2) Controls provided by a computerized fill and credit system maybe deemed an adequate alternative to viewing the fill and credit slips.

(u) *Currency and coin.* (1) The surveillance system shall monitor and record with sufficient clarity all areas where currency or coin may be stored or counted.

(2) Audio capability of the soft count room shall also be maintained.

(3) The surveillance system shall provide for:

(i) Coverage of scales shall be sufficiently clear to view any attempted manipulation of the recorded data.

(ii) Monitoring and recording of the table game drop box storage rack or area by either a dedicated camera or a motion-detector activated camera.

(iii) Monitoring and recording of all areas where coin may be stored or counted, including the hard count room, all doors to the hard count room, all scales and wrapping machines, and all areas where uncounted coin may be stored during the drop and count process.

(iv) Monitoring and recording of soft count room, including all doors to the room, all table game drop boxes, safes, and counting surfaces, and all count team personnel. The counting surface area must be continuously monitored and recorded by a dedicated camera during the soft count.

(v) Monitoring and recording of all areas where currency is sorted, stacked, counted, verified, or stored during the soft count process.

(v) *Change booths.* The surveillance system shall monitor and record a general overview of the activities occurring in each gaming machine change booth.

(w) *Video recording and/or digital record retention.*

(1) All video recordings and/or digital records of coverage provided by the dedicated cameras or motion-activated dedicated cameras required by the standards in this section shall be retained for a minimum of seven (7) days.

(2) Recordings involving suspected or confirmed gaming crimes, unlawful activity, or detentions by security personnel, must be retained for a minimum of thirty (30) days.

(3) Duly authenticated copies of video recordings and/or digital records shall be provided to the Commission upon request.

(x) *Video library log.* A video library log, or comparable alternative procedure approved by the Tribal gaming regulatory authority, shall be maintained to demonstrate compliance with the storage, identification, and retention standards required in this section.

(y) *Malfunction and repair log.* (1) Surveillance personnel shall maintain a log or alternative procedure approved by the Tribal gaming regulatory authority that documents each malfunction and repair of the surveillance system as defined in this section.

(2) The log shall state the time, date, and nature of each malfunction, the efforts expended to repair the malfunction, and the date of each effort, the reasons for any delays in repairing the malfunction, the date the malfunction is repaired, and where applicable, any alternative security measures that were taken.

(z) *Surveillance log.* (1) Surveillance personnel shall maintain a log of all surveillance activities.

(2) Such log shall be maintained by surveillance room personnel and shall be stored securely within the surveillance department.

(3) At a minimum, the following information shall be recorded in a surveillance log:

(i) Date;

(ii) Time commenced and terminated;

(iii) Activity observed or performed; and

(iv) The name or license credential number of each person who initiates, performs, or supervises the surveillance.

(4) Surveillance personnel shall also record a summary of the results of the surveillance of any suspicious activity. This summary may be maintained in a separate log.

Signed at Washington, DC, this 17th day of June, 2002.

Montie R. Deer,

Chairman.

Elizabeth L. Homer,

Vice-Chair.

Teresa E. Poust,

Commissioner.

[FR Doc. 02–15644 Filed 6–26–02; 8:45 am]

BILLING CODE 7565–01–P

Federal Register

Thursday,
June 27, 2002

Part III

Department of Agriculture

Food and Nutrition Service

7 CFR Part 226

Child and Adult Care Food Program; Implementing Legislative Reforms To Strengthen Program Integrity; Final Rule

DEPARTMENT OF AGRICULTURE

Food and Nutrition Service

7 CFR Part 226

RIN 0584–AC94

Child and Adult Care Food Program; Implementing Legislative Reforms To Strengthen Program Integrity

AGENCY: Food and Nutrition Service, USDA.

ACTION: Interim rule.

SUMMARY: This rule incorporates in the Child and Adult Care Food Program regulations the changes mandated by the Agricultural Risk Protection Act of 2000 and the Grain Standards and Warehouse Improvement Act of 2000. The changes made by these laws that affect the Child and Adult Care Food Program were enacted due to concerns resulting from the findings of State and Federal Program reviews and from audits and investigations conducted by the Department's Office of Inspector General. The changes made by this rule are in several broad Program areas: the basic eligibility criteria for participation by institutions; procedures for denying institutions' applications and for terminating agreements with institutions and day care homes that do not meet Program requirements; administrative review procedures for institutions and day care homes; State agency and sponsoring organization monitoring requirements; limits on the amount of reimbursable administrative costs for sponsors of centers; and State agency controls on day care home participation. The changes are designed to improve Program operations and monitoring at the State agency and institution levels.

DATES: The effective date for this rule is July 29, 2002. For sponsoring organizations participating in the Program as of the date of publication, the provision at § 226.16(b)(1) relating to the appropriate level of monitoring staff must be implemented no later than July 29, 2003. To be assured of consideration, comments must be postmarked on or before December 24, 2002. Comments will also be accepted via E Mail if sent to *CNDPROPOSAL@FNS.USDA.GOV* no later than 11:59 p.m. on December 24, 2002.

ADDRESSES: Comments should be addressed to Mr. Robert Eadie, Chief, Policy and Program Development Branch, Child Nutrition Division, Food and Nutrition Service, Department of Agriculture, 3101 Park Center Drive, Room 634, Alexandria, Virginia 22302–1594. Comments will also be accepted via E Mail sent to *CNDPROPOSAL@FNS.USDA.GOV.* All written submissions will be available for public inspection at this location Monday through Friday, 8:30 a.m.–5 p.m.

FOR FURTHER INFORMATION CONTACT: Mr. Edward Morawetz or Ms. Melissa Rothstein at the above address or by telephone at (703) 305–2620. A regulatory impact analysis was completed as part of the development of this interim rule. Copies of this analysis may be requested from Mr. Morawetz or Ms. Rothstein.

SUPPLEMENTARY INFORMATION:

Background

What Led to the Increased Focus on Program Management and Integrity in the Child and Adult Care Food Program?

In recent years, State and Federal reviews of the Child and Adult Care Food Program (CACFP or Program) have found a number of cases of mismanagement, abuse, and, in some instances, fraud by institutions and facilities participating in the CACFP. (''Institution'' means an independent center or a sponsoring organization that holds an agreement with the State agency to administer CACFP. ''Facility'' will be defined in this rule to mean any center or day care home participating in CACFP under a sponsoring organization. ''Center'' will be defined in this rule to include child care centers, adult day care centers, and outside-school-hours centers). These reviews revealed critical weaknesses in State agency and institution management controls over Program operations, and examples of regulatory noncompliance by institutions and facilities, including improper use of Program funds. In addition, audits and investigations conducted by the Department's Office of Inspector General (OIG) raised serious concerns regarding the adequacy of financial and administrative controls in CACFP and documented instances of mismanagement and, in some cases, fraud, by Program participants. Finally, the General Accounting Office conducted a review of the CACFP which raised questions concerning Federal and State administration of the Program.

What Did the Department Do in Response to These Audits, Investigations, and Reviews?

In 1995, we convened a working group of State and Federal Program administrators to address the issues raised in these reviews and audits. Based on input from this group, that identified the most critical and vulnerable aspects of Program management in day care homes and child care centers, we developed and disseminated guidance on management improvement in the CACFP to all State agencies in 1997 and 1998. In the meantime, we continued work on proposed regulations designed to address the problems identified in State and Federal reviews and in audit findings from OIG.

What Was the Legislative Response to the Review and Audit Findings?

The William F. Goodling Child Nutrition Reauthorization Act of 1998 (Pub. L. 105–336, October 31, 1998) earmarked a portion of the CACFP appropriation for Fiscal Years 1999 through 2003 to provide training and technical assistance to State agencies to improve program management and oversight (42 U.S.C. 1766(q)(3)). With this funding, we developed a formal training package that incorporated and expanded upon the written management improvement guidance issued in 1997–1998. In the fall and winter of 1999–2000, we conducted sessions around the country during which over 500 State agency staff involved in various aspects of Program administration received training in these management improvement techniques. We also intensified our efforts to monitor the CACFP in every State in fiscal years 2000 and 2001. We will use the results of these reviews to inform us in developing additional training and guidance on the most problematic aspects of Program operations and administration, and to help us target areas of State-level Program management for more intensive review in the future.

On June 20, 2000, the Agricultural Risk Protection Act of 2000 (Pub. L. 106–224, (ARPA)) was enacted. ARPA made a number of changes to the CACFP statute (section 17 of the Richard B. Russell National School Lunch Act (42 U.S.C. 1766) (NSLA)) designed to improve Program integrity. Shortly after that, the Grain Standards and Warehouse Improvement Act of 2000 (Pub. L. 106–472, November 9, 2000) (Grain Standards Act) modified one of the amendments made by ARPA. The ARPA and Grain Standards Act amendments are the basis for this rule and are discussed in more detail below.

Why Is the Department Publishing These Changes in an Interim Rule?

We are publishing this as an interim rule because of the requirements of ARPA. Section 263(a) of ARPA required

the Secretary to publish rules as soon as practicable without regard to the notice and comment requirements of section 553 of the Administrative Procedure Act, the Secretary of Agriculture's policies relating to public participation in rulemaking, and the Paperwork Reduction Act. Therefore, we are required to publish a rule incorporating these changes to CACFP as expeditiously as possible. The amendments made by section 307 of the Grain Standards Act are essential to full implementation of the ARPA provisions and we have thus found that good cause exists to publish those amendments without first taking public comment.

Has the Department Issued Any Guidance on the Amendments Made by ARPA and the Grain Standards Act?

Yes. To help State agencies implement these provisions until a rule could be published, we issued the following items:

- July 20, 2000—''Implementing Statutory Changes to the CACFP Mandated by the Agricultural Risk Protection Act of 2000 (Pub. L. 106–224)''
- October 16, 2000—''Monitoring Requirements for Sponsoring Organizations in the Child and Adult Care Food Program (CACFP)''
- October 17, 2000—Letter to State agency directors on termination of institutions and day care homes
- April 12, 2001—''Effects of the Agricultural Risk Protection Act, Pub. L. 106–224, on termination of the agreements of day care home providers in the CACFP''

These items were sent to all State agencies and are also available on our website at *www.fns.usda.gov/cnd.*

In addition, in December of 2000, we conducted training for all Food and Nutrition Service (FNS) regional staff on the ''suspension'' provisions in the Grain Standards Act.

What Is the Relationship Between This Rule and the Proposed Rule on Improving Management and Program Integrity in CACFP?

Enactment of ARPA meant that some of the provisions that we had originally planned to include in the proposed rulemaking are now mandated by § 17 of the NSLA. As a result of ARPA's enactment, we deleted provisions that we originally intended to include in the proposed rule that was ultimately published on September 12, 2000 (65 FR 55101). The provisions deleted from the proposed rule, as well as other provisions relating to the amendments made by ARPA and the Grain Standards Act, are addressed in this interim rule. After we receive public comment on this interim rule, we will analyze comments on both the proposed and interim rules. We then intend to publish a single rule that implements the provisions of the proposed rule and makes any necessary changes to the provisions being implemented in this interim rule.

Readers should note that in order to make the changes necessary to implement the provisions of ARPA and the Grain Standards Act relating to institution eligibility, we had to reorganize the provisions relating to State agency approval of institution applications in 7 CFR 226.6(b) of the current regulations. We had already proposed to amend several of these provisions in the September 12, 2000, rule (e.g., eliminating the requirements that State agencies notify an institution of an incomplete application within 15 calendar days and that State agencies provide technical assistance to institutions in completing their applications). In order to avoid confusion and to provide us the opportunity to evaluate any comments on these proposed changes, we have not included the proposed changes in this interim rule. Therefore, in making the necessary reorganization of § 226.6(b), we repeated these provisions as they exist in the current rules, and *not* as we proposed changing them in the September 12, 2000, rule.

The same circumstances occurred in other parts of this interim rule as well. For the most part, we have avoided incorporating any of the changes proposed on September 12, 2000, in this rule unless two conditions applied: (a) Commenters on the proposed rule were overwhelmingly in favor of the proposed change; *and* (b) making the change in this rule was essential to implementation of the provisions of ARPA and the Grain Standards Act. Provisions from the proposed rule that have been incorporated in this interim rule are explicitly noted in this preamble.

What Is the Department's Role in Ensuring Proper Implementation of the Many Changes Mandated by This Rule?

We will continue to monitor, and provide technical assistance to, State agencies to assure proper implementation of this rule's provisions. Specific funding for CACFP training and technical assistance is being utilized, in part, to conduct more, and more comprehensive, management evaluations of State agencies' Program administration.

In Fiscal Years 2000–2001, we conducted reviews in every State, and we will continue to conduct intensive monitoring in future years as well. As part of this effort, we revised the CACFP management evaluation guidance used by regional offices in order to ensure that an in-depth evaluation of each State agency's Program administration was conducted. The management evaluation guidance will be further revised to add compliance with the new provisions of this rule as a key element of management evaluations conducted after this rule's publication.

How Is the Remainder of This Preamble Organized?

Because of the overlap between some provisions of the interim and proposed rules, we have organized this preamble into three parts, using approximately the same organization we used in the proposed rule. This organization of the preamble is intended to facilitate the later publication of a single rule both finalizing the provisions of the proposed rule and making any necessary modifications to this interim rule. The preamble is organized as follows:

Part I. Basic Institution Eligibility Criteria, Review and Approval of Institutions' Applications; Serious Deficiency Determinations, Corrective Action, Suspension, Termination, and Disqualification; and Administrative Reviews

A. Basic requirements for institution eligibility

1. Limits on outside employment (§§ 226.6(b)(16) and 226.16(b)(7))
2. Bonding (§§ 226.6(b)(17) and 226.16(b)(4))
3. Tax exempt status (§§ 226.12(b)(2)(i), 226.15(a), 226.17(b)(2), 226.19(b)(2) and 226.19a(b)(4))
4. Past performance (§§ 226.6(b)(12)–(14), 226.15(b), 226.15(b)(7)–(8) and 226.16(b))

B. Standards for State agency review of an institution's application (§ 226.6(b)(18))

C. Additional condition for State agency approval of a new sponsoring organization's application (§§ 226.6(b)(11) 226.6(b)(18)(ii)(A)

D. Serious deficiency determination, corrective action, suspension, termination, and disqualification (§§ 226.2 and 226.6(c))

1. Denial of an application from a new or renewing institution (§§ 226.6(c)(1) and (2))
2. Actions based on serious deficiency determinations (§§ 226.6(c)(1), (c)(2), and (c)(3))
3. Corrective action timeframes (§ 226.6(c)(4))
4. Suspension of participation for an institution (§§ 226.2 and 226.6(c)(5))
5. FNS determination of serious deficiency (§ 226.6(c)(6))
6. National disqualified list (§§ 226.2 and 226.6(c)(7))
7. State agency list (§§ 226.2 and 226.6(c)(8))

E. Administrative reviews for institutions and responsible principals and responsible individuals (§§ 226.2 and 226.6(k))

Part II. State Agency and Institution Review and Oversight Requirements

A. Unannounced reviews

1. Unannounced reviews by sponsoring organizations (§§ 226.2 and 226.16(d)(4))
2. Unannounced reviews by State agencies (§ 226.6(m))
3. Notification requirements (§§ 226.6(f)(1), 226.16(d)(4)(v), and 226.18(d)(1))

B. Sponsor monitoring staff (§§ 226.6(f)(2), 226.16(b)(1), and 226.16(d)(4))

C. State review cycle (§ 226.6(m)(4))

Part III. Other Operational Provisions

A. Definition of institution (§ 226.2)

B. Ceiling on administrative reimbursements for sponsors of centers (§§ 226.6(f)(3) and 226.16(b)(1))

C. State agency limits on transfers by family day care homes (§§ 226.6(p) and 226.18(b)(13))

D. Notice to parents/guardians of enrolled participants (§ 226.16(b)(5))

E. Procedures for recovery of funds disbursed to institutions (§ 226.14(a))

F. Disqualification and administrative reviews for family day care homes (§§ 226.16(l) and 226.6(l))

Part I. Basic Institution Eligibility Criteria; Review and Approval of Institutions' Applications; Serious Deficiency Determinations, Corrective Action, Suspension, Termination, and Disqualification; and Administrative Reviews

In order to improve Program management in the CACFP, it is critical that an institution (i.e., an independent center or a sponsoring organization of day care homes and/or centers) be required to demonstrate in its Program application that it is capable of administering the Program in accordance with the regulations. Similarly, when an institution participating in the Program is found to have serious management problems and fails to take corrective action within a reasonable period, it has demonstrated that it is not qualified to continue participating. In both cases, State agencies must have clear minimum Federal guidelines for taking action to deny an institution's application or to terminate the institution's Program participation. Part I of this preamble discusses the new ARPA and Grain Standards Act requirements that are intended to improve State agencies' ability to approve or renew only qualified applicant institutions; to restrict or eliminate certain institutional practices deemed problematic by State and Federal reviews and OIG audits; and to terminate institutions' agreements when necessary.

A. Basic Requirements for Institution Eligibility

Prior to ARPA, What Were the Basic Requirements for Institution Eligibility?

The NSLA sets forth certain basic eligibility requirements that institutions must meet prior to their participation in CACFP. Before enactment of ARPA, these were set forth at §§ 17(a) and 17(d) of the NSLA. In addition to requirements specific to different types of institutions, the law stated that no institution was eligible to participate unless it accepted final administrative and financial responsibility for the Program's operation, and had not been seriously deficient in its administration of CACFP or other child nutrition programs.

What Changes Did ARPA Make to These Requirements?

Section 243(a)(8) of ARPA added three new eligibility requirements for sponsoring organizations: (1) Employment of an appropriate number of monitoring staff, based on regulations promulgated by the Department; (2) establishment of a policy that prohibits sponsoring organization employees from having other employment that interferes with their Program responsibilities and duties; and, (3) for *new* sponsoring organizations, compliance with any State law, regulation, or policy requiring them to be bonded. In addition, § 243(b) made two changes to basic eligibility requirements for all institutions by: (1) modifying the tax exempt status provision of the NSLA by eliminating the participation of any private nonprofit institution which has not yet obtained (i.e., is ''moving towards'') tax exempt status; and (2) broadening the requirements for satisfactory past performance by all institutions.

These new eligibility requirements (except for sponsor monitor staffing standards, discussed in Part II of this preamble) are discussed in this section (Part I(A)) of the preamble. Other eligibility criteria pertaining to an institution's viability, capability, and accountability, as well as a special requirement pertaining to new sponsoring organizations, were added to the NSLA by § 243(b) of ARPA and are discussed in Parts I(B) and I(C) of this preamble, respectively.

1. Limits on Outside Employment (§§ 226.6(b)(16) and 226.16(b)(7))

Section 243(a)(8)(D) of ARPA amended § 17(a) [§ 17(a)(6)(E), as amended] of the NSLA to require that all sponsoring organizations have in effect ''a policy that restricts other employment by employees that interferes with the responsibilities and duties of the employees of the organization with respect to the program. * * *'' This requirement was prompted by several OIG audits which uncovered examples of sponsoring organizations' executive directors or other employees who received full-time salaries paid out of CACFP administrative funds while also being employed in a full-time capacity by another organization. This rule adds § 226.6(b)(16), which requires sponsoring organizations not participating as of July 29, 2002 to submit their outside employment policy to the State agency as part of their Program applications, and to have sponsoring organizations participating as of July 29, 2002 submit an outside employment policy to the State agency not later than August 26, 2002. This rule also makes a parallel change to § 226.16(b)(7).

Is the Department Regulating the Content of These Outside Employment Policies?

We will not, except to establish certain broad parameters for State agencies' use in reviewing such policies. Outside employment policies must apply to *all* employees of the sponsoring organization who have responsibilities relating to the operation of CACFP. We acknowledge that these policies do not have to bar sponsoring organization employees from holding second jobs; however, a full-time employee cannot reasonably be expected to perform his/her Program duties while holding a second full-time job. Therefore, in establishing limits on outside employment, such policies should take into account the number of work hours being charged to the CACFP (e.g., is the employee being paid for 8 hours of work per week related to CACFP, or 40?) and the nature of the sponsor-related duties the employee performs which are paid out of CACFP funds. In addition, such policies must specifically restrict any outside employment that constitutes a real or apparent conflict of interest.

2. Bonding (§§ 226.6(b)(17) and 226.16(b)(4))

Section 243(a)(8)(D) of ARPA further amended § 17(a) [§ 17(a)(6)(F), as amended] of the NSLA to require that any new sponsoring organization applying to enter the program obtain a bond if such bond is required ''under State law, regulation, or policy. * * *'' Because ARPA refers to State law, regulation, or policy, it is apparent that States should be accorded broad discretion in this area. However, the law is clear that such bonding requirements

may only be applied to *new* (i.e., those that apply for initial participation on or after the date of enactment of ARPA: June 20, 2000) sponsoring organizations. This provision does not preclude a State agency from requiring an institution to obtain a bond as part of a corrective action plan.

Accordingly, this rule adds §§ 226.6(b)(17) and 226.16(b)(4) to require that sponsoring organizations applying for initial participation in CACFP on or after June 20, 2000, submit a bond if such bond is required by State law, regulation, or policy. In order to analyze this provision's impact, § 226.6(b)(12) also requires that any State agencies with such a requirement provide to the appropriate Food and Nutrition Service regional office (FNSRO) a copy of their State's law, regulation, or policy establishing bonding requirements for new CACFP sponsors, as well as a list of the organizations that have posted a bond as a result of such a requirement.

3. Tax Exempt Status (§§ 226.12(b)(2)(i), 226.15(a), 226.17(b)(2), 226.19(b)(2), and 226.19a(b)(4))

Prior to enactment of ARPA, § 17(d)(1) of the NSLA required that nonprofit institutions have tax exempt status under the Internal Revenue Code of 1986 or, ''under conditions established by the Secretary, [be] moving toward compliance with the requirements for tax exempt status. * * *'' A previous amendment to the NSLA had limited to 180 days the period during which most institutions could participate in CACFP in a ''moving towards tax exempt'' status. However, § 243(b) of ARPA amended § 17(d)(1) [§ 17(d)(1)(B) as amended] to require nonprofit institutions to have tax exempt status under the Internal Revenue Code of 1986 prior to the start of their Program participation.

Accordingly, this rule amends §§ 226.12(b)(2)(i), 226.15(a), 226.17(b)(2), 226.19(b)(2), and 226.19a(b)(4) to require that nonprofit organizations have tax exempt status prior to their participation in CACFP.

4. Past Performance (§§ 226.6(b)(12)–(14), 226.15(b), 226.15(b)(7)–(8), and 226.16(b))

Prior to enactment of ARPA, § 17(a)(2)(B) of the NSLA stated that, in order to be eligible to participate in CACFP, an institution must not have been ''seriously deficient in its operation of the child care food program, or any other'' child nutrition program ''for a period of time specified by the Secretary.'' Section 243(a)(8)(A) of ARPA amended § 17(a)(6)(B) [as amended] by adding that institutions must not have been ''determined to be ineligible to participate in any publicly funded program by reason of violation of the requirements of the program'' for a period of time specified by the Secretary.

Section 243(c) of ARPA also added § 17(d)(5)(B)(i) to the NSLA, which requires us to establish procedures for terminating the participation of an institution or day care home provider that, among other things, conceals a criminal background. This provision indirectly establishes another eligibility requirement with regard to criminal backgrounds.

Why Does This Rule Revise the Requirement Concerning Past Performance in the Child Nutrition Programs?

Currently, the requirement that a State agency may not enter into an agreement with an institution that has been seriously deficient in its operation of the CACFP or any other child nutrition program is contained in § 226.6(c). These institutions are placed on what has been known as the FNS list of ''seriously deficient institutions'' (this list is renamed the National disqualified list by this rule). The institution remains ineligible for the Program until FNS, in consultation with the appropriate State agency, determines that the serious deficiency that resulted in the ineligible status has been corrected.

As discussed further in Part I(D) of the preamble, this rule reorganizes § 226.6(c). As part of this reorganization, we moved the provision that requires State agencies to deny applications from institutions that have been seriously deficient in the CACFP or other child nutrition programs to § 226.6(b). This provision is really a requirement for Program eligibility rather than a basis for a new determination of serious deficiency (that is, if an institution applying to participate was determined to be on the National disqualified list, its application would be denied, but it would not be declared seriously deficient and placed on the list again). As such, it is more properly placed in § 226.6(b), which is the section that addresses application approval. We have also reworded the provision to make it clear that State agencies are prohibited from approving an application submitted by an institution that is on the National disqualified list. This rule also makes clear that State agencies are prohibited from approving an institution's application if any of the institution's principals is on the National disqualified list, and are prohibited from approving the sponsoring organization's application on behalf of a facility if either the facility or any of its principals is on the National disqualified list. These prohibitions are in §§ 226.6(b)(12) and (b)(13) of this rule. Related changes are made by this rule in §§ 226.15(b) and 226.16(b). These changes are necessary to comply with the requirements of ARPA for establishing a National disqualified list that includes disqualified institutions, day care home providers, and individuals.

How Does This Rule Incorporate the Requirement Concerning Past Performance in Other Publicly Funded Programs?

This rule places the new eligibility criterion concerning past performance in other publicly funded programs in § 226.6(b). In order to assist State agencies in evaluating whether an institution is ineligible to participate in any other publicly funded program by reason of violating that program's requirements, this rule adds new §§ 226.6(b)(13) and 226.15(b)(7) that require, as a part of each application, that the institution list all publicly funded programs in which the institution and its principals participated in the past seven years and that the institution certify that neither it nor any of its principals is ineligible to participate in those programs by reason of violation of the requirements of those programs during that period. Instead of such a certification, the institution may submit documentation that the institution or the principal previously determined ineligible was later fully reinstated in, or is now eligible to participate in, the program, including the payment of any debts owed.

What Is the Effect of a Criminal Background?

As noted above, in order to incorporate the ARPA requirement that we establish procedures for terminating the participation of an institution or day care home provider that conceals a criminal background, we must also establish an application eligibility requirement with regard to criminal backgrounds. This rule amends § 226.6(b) to prohibit State agencies from approving an institution's application if the institution or any of its principals have been convicted of any activity that occurred during the past seven years and that indicated a lack of business integrity. Convictions indicating a lack of business integrity include fraud, antitrust violations, embezzlement, theft, forgery, bribery, falsification or obstruction of justice, or any other activity indicating a lack of

business integrity as defined by the State agency. As with the requirement concerning past performance in other publicly funded programs, the rule adds to new § 226.6(b)(14) a requirement that institutions include with their applications a certification concerning the criminal backgrounds of the institution and its principals. A related amendment is made in § 226.15(b)(8).

Are There Any Other Changes to the Program Application Resulting From These ''Past Performance'' Provisions Mandated by ARPA?

Yes. We have also amended § 226.6(b)(13) and (b)(14) to require that the Program application include, as part of these two certification requirements, language stating that institutions and individuals providing false certifications will be placed on the National disqualified list and will be subject to any other applicable civil or criminal penalties. This language will help to deter the submission of applications by ineligible institutions and individuals, and will also provide the institution and individuals with notice regarding the consequences of submitting false certifications.

Why Did the Department Establish Seven Years as the Period of Time for the Past Performance and Criminal Background Eligibility Criteria?

Prior to this rulemaking, an institution that had its participation terminated as a result of an uncorrected serious deficiency in its operation of any FNS Child Nutrition Program was placed on the National disqualified list. Once on the list, an institution was barred indefinitely from participating in the CACFP. Removal from the list occurred only when FNS, in consultation with a State agency, determined that the original serious deficiency had been corrected. In establishing criteria for participation for this rule, we considered whether an indefinite ban on participation accomplished the goal of ensuring Program integrity. We also considered whether an indefinite ban was a reasonable consequence of serious past performance problems by an individual or organization, and whether it was reasonable for those with a criminal background.

We examined similar regulations providing a bar to participation, the government-wide nonprocurement suspension and debarment provisions, codified for the Department at 7 CFR part 3017. Companies and individuals may be debarred when determined not presently responsible based on actions such as criminal convictions or civil settlement agreements for fraud, antitrust violations, violation of terms of a public contract, and similar acts. Under the debarment regulations, companies and individuals may be debarred—banned—from participating in both procurement and nonprocurement transactions with Federal agencies, grantees and subgrantees, for a period of 3 years and, in some circumstances, 5 years. This suggested that a more time-limited ban on Program participation by an institution would be reasonable under the new regulations for the Program. However, we also concluded that being placed on the CACFP National disqualified list differed from the debarment provisions in impact due to the breadth of a debarment action's effect. While debarment prevents an entity from entering into any transactions with any Federal agency and many grantees and subgrantees, being placed on the CACFP list merely affects participation in FNS Child Nutrition Programs. Debarment's impact is potentially more significant than a ban on participation from a single program or set of programs.

On balance, we established the seven-year ban to underscore the importance of ensuring Program integrity—the fundamental focus for Congress in creating the statutory provisions we are implementing in this rule. At the same time, we wanted to afford individuals and institutions with a ''second chance'' to participate in CACFP following a predictable period of time. We determined that a seven-year period gives institutions terminated from Program participation an opportunity to correct deficiencies and re-apply for Program participation. Within seven years, institutions interested in reapplication could re-pay Federal funds, institute fiscal and food service changes, retain and train sufficient staff, and establish a proven record of business integrity. This rule establishes a seven-year period for both the past performance and criminal background eligibility criteria. (Note: Placement on, and removal from, the National Disqualified list is discussed in Part I(C)(6) of this preamble, below.

Will State Agencies Routinely Be Required To Research the Past Performance of Institutions in Other Publicly Funded Programs, or To Perform Criminal Background Checks?

No. State agencies may rely on the institution's certification as to its participation in publicly funded programs and its criminal convictions, and the participation in publicly funded programs and criminal convictions of its principals. Although State agencies are not required to conduct background checks or otherwise investigate the past performance of institutions and their principals, nothing in this rule prohibits such efforts. Further, if a State agency has reason to believe that the institution or one of its principals may have been determined ineligible for a publicly funded program, § 226.6(b)(13)(iii) requires the State agency to follow up with the entity administering the publicly funded program to gather additional information. Also, if a State agency later discovers that either certification made by the institution is false, the State agency must declare the institution seriously deficient for providing false information on its application (see §§ 226.6(c)(1)(ii)(A), 226.6(c)(2)(ii)(A), and 226.6(c)(3)(ii)(A), which are discussed in more detail in Part I(D) of the preamble).

B. Standards for State Agency Review of an Institution's Application (§ 226.6(b)(18))

Prior to ARPA, What Other Criteria Did Institutions Need To Meet in Order To Be Approved for Program Participation?

The statutory language mentioned in Part I(A) of this preamble, above (that no institution was eligible to participate in the Program unless it ''accepts final administrative and financial responsibility for management of an effective food service. * * *'') required State agencies to analyze each institution's administrative and financial capability to successfully operate the CACFP. The Program regulations at §§ 226.6(b), 226.6(f)(3), 226.7(g) and 226.15(b)(3) pertaining to the content and review of the budgets annually submitted by all institutions, and at §§ 226.6(b)(5) and 226.6(f)(2) pertaining to the management plans submitted by all sponsoring organizations, provided the bases for State agencies to make this determination of financial and administrative capability.

How Did ARPA Modify the Requirements for State Agency Assessment of an Institution's ''Administrative and Financial Capability''?

The results of recent reviews and audits suggest that the existing criteria for application review have not provided specific enough guidance to State agencies for their use in determining whether an institution's application demonstrates its capability to administer the Program in accordance with the regulations. To that end, ARPA made changes designed to reinforce the

Management Improvement Training FNS provided to State agencies on how they must review a Program application in order to assess an institution's qualifications to operate the CACFP.

Section 243(b)(1) of ARPA amended § 17(d) of the NSLA by requiring that all institutions demonstrate that they meet three broad criteria documenting their ability to operate the Program. These criteria, which must be documented in the Program application, are that ''the institution—

(i) is financially viable;

(ii) is administratively capable of operating the program (including whether the sponsoring organization has business experience and management plans appropriate to operate the program) described in the application of the institution; and

(iii) has internal controls in effect to ensure program accountability.''

State agency staff will recognize these as the same criteria—viability, capability, and accountability (or ''VCA'')—that were described in the Management Improvement Training FNS provided to them during the fall and winter of 1999–2000.

In Light of ARPA's Addition of These Criteria to the Law, How Are You Changing the Requirements for State Agency Review of Institution Applications?

The existing application process does not always provide State agencies with a clear enough way of determining whether an institution meets the law's VCA criteria. Current regulatory requirements at § 226.6(b), which only list the minimum information that must be included in an application, may have inadvertently encouraged some State agencies to adopt a ''checklist approach'' to application review. Such an approach stressed checking to ensure that all of the required components were in the application, but did not always result in a critical analysis of the content of some vital parts of the application, especially the budget and (for sponsoring organizations) the management plan.

In order to implement ARPA's intent that only institutions which have VCA be approved for participation, this interim rule requires at § 226.6(b)(18) that all institutions demonstrate in their applications that they will meet, or are meeting, the three ''performance standards'' addressed in FNS's Management Improvement Training and added to the law. New institutions with no recent record of CACFP performance would be required to show that they have management systems in place and business/management experience which would enable them to operate in accordance with the performance standards. Renewing institutions would be required—through their application and through the most recent State evaluation of their Program operations—to continue to operate in conformance with the performance standards. The definitions of ''new'' and ''renewing'' institutions which were proposed in the rule published on September 12, 2000 (65 FR 55101) are promulgated in this rule to facilitate implementation of these ARPA requirements.

What Are ''Performance Standards'', and How Will They Improve the Application Review Process?

Recently-completed reviews and audits of CACFP institutions have demonstrated conclusively that the mere submission of certain documents with the application provides little assurance that an applicant is capable of administering the Program in accordance with regulations. The requirement to measure the application's content against specific, performance-based measurements (''performance standards'') should change the focus of the State agency's application review process from checking to see that certain documents have been submitted to evaluating the applicant's understanding and ability to implement the Program's requirements, based on the substantive information contained in those documents.

For example, institutions are currently required to submit an administrative budget with their applications. A ''performance standard'' which states that all items in the budget must conform to government-wide, Departmental, and Program-specific financial management requirements emphasizes, both to institutions and to State agency budget reviewers, that each item of cost in the budget must be reasonable, necessary and allowable, and that the budget as a whole must demonstrate that the applicant will devote sufficient resources to ensure the proper, efficient, and effective management of the Program.

What Are the Three ''Performance Standards'', and How Do They Relate to the Process of Establishing in the Application That Each Institution Is ''Viable, Capable, and Accountable''?

These three standards are based on the NSLA's requirement that only institutions which have VCA may participate. The standards—which differ slightly according to whether the institution is a sponsor of day care homes and/or centers, or is an independent center—are designed to help a State agency to measure an institution's potential ability to deliver the Program's benefits to children in accordance with generally accepted business practices and all applicable regulations and guidance. We wish to emphasize that these standards do not replace existing regulatory requirements on institutions' applications; rather, they supplement these requirements and provide State agencies with a better means of fully evaluating an institution's ability to participate in CACFP in accordance with Program regulations.

First Standard: Financial Viability/ Financial Management

The first standard for evaluating an institution's application measures whether it is financially viable, and whether it will expend and account for funds according to financial management requirements set forth in Program regulations, the Department's Uniform Financial Management Requirements (7 CFR parts 3015 and 3016), and FNS Instruction 796–2, ''Financial Management—Child and Adult Care Food Program.'' This rule requires State agencies to evaluate institutions' applications as to whether:

(1) A new sponsoring organization has documented in its management plan that there is a need for its services. This means that its participation will help ensure the delivery of Program benefits to otherwise unserved facilities or participants, in accordance with criteria developed by the State agency pursuant to paragraph (b)(11) of this section. All sponsoring organizations must demonstrate that they will use appropriate practices for recruiting facilities, consistent with paragraph (p) of this section and any State agency requirements;

(2) The institution has adequate financial resources to operate the Program on a daily basis, based on Program administrative earnings and non-Program resources (if any) the institution plans to devote to Program administration, and can document financial viability (e.g., through audits and financial statements); and

(3) Costs in the institution's budget are necessary, reasonable, allowable, and properly documented.

The determination of whether the institution is ''financially viable'' will be based upon its budget (and, for a sponsoring organization, its management plan), and will vary based on the size of the institution, the number of facilities it proposes to serve, the number of staff it needs to carry out all Program responsibilities, and the non-CACFP resources (if any) to be used

in the organization's operation of the CACFP.

With regard to recruitment practices, readers should note that this standard will require State agencies to review the facility recruitment practices of any sponsoring organization, whether it administers the Program only in homes, only in centers, or in both homes and centers. Although sponsors of centers rarely recruit new facilities in the same manner, or with the same rapidity, as sponsors of day care homes, the results of some of the OIG audits have led us to re-examine the recruitment practices utilized by some center sponsors. Therefore, if a sponsor proposes to recruit child care or adult day care centers, this rule requires State agencies to apply the recruitment element to them as well.

With regard to the recruitment of day care homes by a sponsoring organization already participating in CACFP, we wish to emphasize that ''appropriate recruitment practices'' are those designed to add non-participating day care homes to the Program, not those that are designed to encourage participating homes to change sponsorships. From time to time, some day care home providers may wish to change sponsors for valid reasons. However, a sponsoring organization's costs related to marketing their sponsorship to providers already participating in CACFP under another sponsorship are not allowable Program costs, under the ''reasonable and necessary'' requirements of government-wide cost principles and FNS Instruction 796–2, ''Financial Management—Child and Adult Care Food Program.'' We also wish to remind State agencies that they must ensure that a non-participating provider understands that it may choose among approved sponsors if more than one sponsor serves the area of the State in which the provider resides.

Second Standard: Administrative Capability

The second standard for evaluating an institution's application measures whether it is administratively capable and can effectively manage the Program. Appropriate and effective management practices must be in effect to ensure that the Program operates in accordance with regulations. State agencies will review all institutions' applications to determine whether, once they are operating the CACFP, they:

(1) Have an adequate number and type of qualified staff to ensure operation of the Program in accordance with this part;

(2) If a sponsoring organization, document in their management plan that they employ staff sufficient to meet the ratio of monitors to facilities set forth in § 226.16(b)(1) and the factors established by the State agency pursuant to § 226.6(f)(2); and

(3) If a sponsoring organization, have written policies and procedures that assign Program responsibilities and that ensure compliance with civil rights and other Program requirements.

Third Standard: Program Accountability

The third standard requires the State agency to review the application of any institution to determine that the institution can ensure the accountability of Program funds, as well as the nutritional adequacy of the Program meal service. To this end, all institutions will be required to document that:

- There is adequate oversight of the Program by the institution's governing board of directors;
- There is a financial management system in place with management controls specified in writing;
- Program records are maintained that are sufficient to document compliance with Program requirements, including budgets, approved budget amendments, and audited financial statements; and
- They will follow practices that result in the operation of the Program in accordance with the meal service, recordkeeping, and other requirements of this part.

In addition, when the institution is a sponsoring organization, the State agency will also review the sponsoring organization's management plan to determine whether the sponsoring organization:

(1) Maintains on file valid and complete facility applications and other appropriate records of provider operations;

(2) Will adequately train sponsoring organization and facilities in proper operation of the Program;

(3) Will monitor each facility's compliance with Program requirements at § 226.16(d)(4);

(4) If a sponsor of day care homes, will correctly classify tier I and tier II day care homes;

(5) Has a financial system and management controls specified in writing that assure fiscal integrity and accountability for all funds and property received, held, and disbursed; assure the integrity and accountability of all expenses incurred; assure that funds and property are used, and expenses incurred, for authorized Program purposes; describe a system of safeguards and controls in place to prevent and detect improper financial activities by sponsoring organization employees; and ensure the timely and accurate payment of claims to all sponsored facilities; and

(6) Has a system that assures that sponsored facilities will comply with the Program meal pattern, licensure/approval, civil rights, claims, and recordkeeping requirements.

The third standard primarily measures whether the applications of independent centers and sponsoring organizations assure that they will accountably and appropriately operate the Program to provide nutritious meals to participants and meet all other Program requirements.

Will the Department Provide More Detailed Descriptions of the Individual Elements of the Three Performance Standards in This Proposal?

No. Including detailed guidance in this rulemaking would make the preamble and regulatory language too cumbersome. Additionally, we could not take into account all of the State-level factors that will affect implementation. Instead, we have presented guidance to State Program administrators in the Management Improvement Guidance issued in 1997–1998 and the training conducted during the fall and winter of 1999–2000. In addition, we will continue to issue Program guidance, and to provide management improvement training, to State agencies on an ongoing basis. State agencies, in turn, are also required to disseminate this written guidance to their institutions, and to train institutions on management improvement regulations and guidance as quickly as possible.

An exception to the statement that we will not provide detailed explanations of the standards in this rule relates to the establishment of sponsor staffing standards for monitoring. Such staffing standards were recommended in the OIG audits and are now statutorily mandated as a result of ARPA. The rationale for these standards is discussed in greater detail in Part II(B) of this preamble, below; the new regulatory requirement appears in § 226.16(d) on sponsors' monitoring responsibilities, and is only cross-referenced in the second performance standard.

What if an Institution's Application Does Not Demonstrate That It Will Meet These Performance Standards?

Unless the State agency determines that an institution has demonstrated its ability to fully meet each of these

standards, the institution's application must be denied and the institution must have the opportunity to request an administrative review of the denial, as specified in § 226.6(k). This new language strengthens the Program's long-standing requirement that, prior to approving an institution for Program participation, the State agency must make a positive determination that the institution's application demonstrates its ability to properly manage and operate the Program.

Accordingly, to provide greater assurance that State agencies approve only those institutions which are capable of operating CACFP in accordance with the regulations, we are revising §§ 226.2, 226.6(b), 226.15(b) and 226.16(b) to:

- Add definitions of ''new'' and ''renewing'' institutions;
- Require that all participating institutions meet the VCA criteria by demonstrating in their Program applications that they comply with the three performance standards discussed above;
- Require that State agencies evaluate all applicant institutions against these performance standards, in order to assess their qualifications to administer the Program properly, efficiently, and effectively; and
- Require that State agencies deny the application of any institution which fails to demonstrate that they meet the performance standards and the other application requirements set forth in § 226.6(b).

C. Additional Condition for State Agency Approval of a New Sponsoring Organization's Application (§§ 226.6(b)(11) and 226.6(b)(18)(ii)(A))

In addition to the application approval criteria embodied in the three performance standards described in Part I(B) of the preamble above, the law establishes an additional condition for the approval of a new sponsoring organization's application to participate in CACFP. Section 243(b)(1) of ARPA further amended § 17(d) [§ 17(d)(1)(C)(i)(II), as amended] of the NSLA by mandating that a State agency may approve a new sponsoring organization's application ''only if the State agency determines that * * * the participation of the institution will help to ensure the delivery of benefits to otherwise unserved family or group day care homes or centers or to unserved children in an area.'' This section of ARPA also requires each State agency to establish criteria to determine whether a new sponsoring organization's participation ''will help to ensure the delivery of benefits to otherwise unserved'' facilities or children.

This provision of ARPA requires a new sponsor to demonstrate to the State agency's satisfaction that it will make CACFP available to currently-unserved facilities or children. It addresses a concern frequently expressed by State agencies and participating sponsoring organizations—that, prior to ARPA, no clear legal basis existed for a State to prohibit a new sponsoring organization from entering CACFP by recruiting an existing sponsor's facilities, sometimes by promising lax enforcement of Program rules.

With regard to the law's requirement that each State agency establish criteria for determining whether a new sponsor will provide benefits to unserved facilities and/or children, the statute implicitly recognizes the possibility of some variation among States' criteria. At the same time, we remind State agencies that, in developing these criteria, they must abide by the law's intent that such criteria apply to new sponsoring organizations only (either sponsoring organizations applying for the first time or applying after a lapse in participation). Additionally, State agencies must understand that the criteria they develop to implement the statutory language regarding unserved facilities and/or children must be administered consistent with current Program rules providing new day care home sponsoring organizations with access to startup funding.

Any State agency requirement that a new sponsoring organization must have a minimum number of homes is contrary to the law. We fully understand that a new sponsoring organization with no financial resources other than CACFP administrative funding will need to sponsor enough homes to generate reimbursement that supports the hiring of staff and the purchase or rental of equipment necessary to successfully operate the Program. However, multi-purpose organizations that have other sources of funding may be willing to use some of these funds to pay for CACFP costs in excess of reimbursements in order to provide the Program's benefits to a small number of homes in an unserved area or areas.

Accordingly, this rule further amends revised § 226.6(b)(11) to require State agencies to develop criteria for determining whether a new sponsoring organization's participation will help ensure the delivery of benefits to otherwise unserved facilities or participants. For the sake of consistency and simplicity, we made clear that this requirement applies to both sponsors of child care facilities and adult day care centers. This rule requires State agencies to disseminate the criteria to new sponsoring organizations when they request information about applying to the Program and requires new sponsoring organizations to submit documentation that they meet the State agency's criteria. This rule also makes this requirement part of Performance Standard 1 (§ 226.6(b)(18)(i)(A)).

D. Serious Deficiency Determination, Corrective Action, Suspension, Termination, and Disqualification (§§ 226.2 and 226.6(c))

What Impact Did ARPA and the Grain Standards Act Have on the Process of Terminating an Institution's CACFP Agreement?

ARPA added provisions to the NSLA that for the first time set statutory standards for the process of suspending the participation of institutions and terminating the agreements of institutions and day care home providers. Shortly thereafter, the Grain Standards Act amended those provisions. ARPA also added new requirements concerning the timing of administrative reviews relating to terminations and suspensions and the availability of administrative reviews for day care home providers in certain cases. As a result of the statutory requirements pertaining to termination, we had to revise the rules governing the entire process leading up to a possible termination—determining an institution ''seriously deficient,'' providing an opportunity to take corrective action, and determining whether the deficiency is satisfactorily corrected.

What Changes Do ARPA and the Grain Standards Act Require?

Section 243(c) of ARPA added a new § 17(d)(5) to the NSLA that requires us to ''establish procedures for the termination of participation by institutions and family or group day care home providers under the program.'' Section 17(d)(5) (as further amended by § 307(c) of the Grain Standards Act) sets forth certain parameters for these procedures. Specifically, the procedures must:

- Include standards for terminating the participation of an institution or day care home provider that ''engages in unlawful practices, falsifies information provided to the State agency, or conceals a criminal background'' or that ''substantially fails to fulfill the terms of its agreement with the State agency'';
- Allow an institution or day care home provider to have an opportunity to take corrective action prior to commencement of termination

procedures, except if the institution or day care home provider engages in practices that pose an imminent threat to participants' health or safety or to the public health or safety, as discussed in Part I(D)(4) below;

- Provide for the suspension of an institution's Program participation if the State agency determines that the institution has submitted ''false or fraudulent claims'' and if a suspension review determines that the ''preponderance of the evidence'' supports the State agency's determination;
- Provide an institution or day care home provider with an administrative review ''prior to any determination to terminate'' an institution's or day care home's agreement; and
- Include the Department's maintenance of a National list of ''institutions, sponsored family or group day care homes, and individuals that have been terminated or otherwise disqualified from participation in the program * * *'' and dissemination of the list to State agencies for use in approving applications for participation.

The changes related to the serious deficiency determination, corrective action, suspension, termination, and disqualification of institutions and responsible principals and responsible individuals are discussed in this part of the preamble (Part I(D)). Part I(D) also discusses FNS determinations of serious deficiency, the National disqualified list, and related State agency lists. Revisions to the administrative review procedures for institutions are addressed in Part I(E) of this preamble, and provisions relating to the disqualification of day care homes and administrative reviews for day care homes follow in Part III(F).

How Does This Rule Amend the Current Regulations at § 226.6(c) To Include These Required Procedures?

The current regulations at § 226.6(c)(1)–(11) list some of the reasons for denying applications and for terminating institutions' agreements as a result of their failure to correct serious deficiencies. The regulations at § 226.6(c) also establish the procedures to be used in denying applications or terminating agreements with institutions.

Over the past several years, based on input from State agencies, we have considered reorganizing and clarifying the regulations dealing with serious deficiencies, corrective action, the termination of CACFP institutions' agreements, and the placement of institutions and individuals on the National disqualified list. The changes to termination procedures mandated by ARPA and the Grain Standards Act, and ARPA's requirement that we develop procedures for all aspects of the serious deficiency/corrective action/termination process, provided us with the opportunity for such a reorganization and clarification.

How Does This Rule Reorganize § 226.6(c)?

The steps that must be followed to deny the application of a new institution, to deny the application of a renewing institution, and to terminate the participation of a participating institution differ. For example, the actions that lead to a serious deficiency determination for a new institution (i.e., an institution applying to participate in the Program for the first time, or after a lapse in participation) are different than for a participating institution. In addition, different procedures must be followed when a State agency takes action to determine an institution seriously deficient versus when FNS takes such an action. In order to accommodate these differences, this rule reorganizes § 226.6(c) as follows:

- § 226.6(c)(1)—Denial of a new institution's application
- § 226.6(c)(2)—Denial of a renewing institution's application
- § 226.6(c)(3)—Termination of a participating institution's agreement
- § 226.6(c)(4)—Corrective action timeframes
- § 226.6(c)(5)—Suspension of participation for an institution
- § 226.6(c)(6)—FNS determination of serious deficiency
- § 226.6(c)(7)—National disqualified list
- § 226.6(c)(8)—State agency list

In an effort to simplify the process, each part of revised § 226.6 provides step-by-step instructions that the State agency must follow in order to take the specified action. As a result, this section of the preamble does not repeat these detailed instructions. Instead, the preamble focuses on the issues that raise unusual questions and the reasons for taking a particular approach to different types of actions. In order to best understand these new provisions, we urge readers to carefully read the new § 226.6(c) before reading this part of the preamble.

1. Denial of an Application From a New or Renewing Institution (§§ 226.6(c)(1) and (2))

What Is the Difference Between a New and Renewing Institution?

This rule amends § 226.2 to add definitions of ''new institution'' and ''renewing institution.'' New institutions are those applying to participate in the Program for the first time or applying after a lapse in Program participation. These definitions enable us to distinguish between the three groups of institutions (''new institutions,'' ''renewing institutions,'' and ''participating institutions'') as we discuss the standards for approving and denying Program applications and terminating Program agreements. These definitions were included in the proposed integrity rule and received widespread commenter support.

When Must a State Agency Deny the Application of a New or Renewing Institution?

The current wording and organization of § 226.6(c) is somewhat unclear with regard to the process for denying applications. For example, because this paragraph deals with both the denial of an institution's application and with the termination of the agreement of a participating institution, some State agencies may have been deterred from denying the application of an institution that failed to demonstrate the ability to operate the Program, because they may have believed that they were required to first determine that the institution was ''seriously deficient''.

State agency administrators are aware that, if a new institution applies to CACFP and is determined unqualified to participate (e.g., it is found to lack the financial and administrative capability to operate the Program), it does not mean that the institution is ''seriously deficient'' in the same sense that a currently participating institution is ''seriously deficient'' when it is found to have mismanaged the Program or misappropriated Program funds. Rather, it may be the case that, by hiring more or better qualified staff or by improving its management plan in other ways, a new institution could subsequently be approved for participation. Thus, new institutions whose applications to participate are denied should not normally be determined seriously deficient and placed on the National disqualified list. Being placed on the National disqualified list would prohibit them from participating in CACFP until they were removed from the list. In fact, an assumption that a new institution whose application is denied will normally be placed on the National disqualified list could deter institutions from applying to participate and State agencies from denying applications, because the consequence of disapproving the application (placement on the National disqualified list) would be so severe.

This rule makes clear in §§ 226.6(c)(1)(i) and 226.6(c)(2)(i) that the State agency must deny the applications of new and renewing institutions if the applications do not meet *all* of the requirements for Program applications in §§ 226.6(b), 226.15(b) and 226.16(b). Only if, in reviewing the application, the State agency determines that the institution has committed one or more serious deficiency as identified in §§ 226.6(c)(1)(ii) and 226.6(c)(2)(ii), must the State agency initiate action to disqualify the institution and the principals and individuals responsible for the serious deficiency(ies).

What Action Must the State Agency Take if It Determines a New Institution Is Not Capable of Meeting the Performance Standards?

If the State agency determines that a new institution is not capable of meeting the performance standards, the State agency must deny the application without making a serious deficiency determination.

How Does This Differ From a State Agency's Determination That a Renewing Institution Is Not Meeting the Performance Standards?

The result for a renewing institution is different from that of a new institution. Normally, we would expect that a State agency would discover that a participating institution is not operating in conformance with the performance standards during a review. In that case, the State agency must take immediate action to initiate a process that could ultimately lead to the termination of the institution's agreement, including declaration of serious deficiency and the opportunity to take corrective action. However, on occasion a State agency might not detect such a failure until a renewing institution submits its application. Again, the State agency must initiate action to deny the renewal application, including declaration of serious deficiency and the opportunity to take corrective action.

2. Actions Based on Serious Deficiency Determinations (§§ 226.6(c)(1), (c)(2), and (c)(3))

What Do You Mean by ''Seriously Deficient'' and ''Disqualified''?

We believe that the terminology used in current regulations may have confused some State agency Program administrators and contributed to errors in responding to institutions with serious operational problems. For example, in current regulations, the phrases ''serious deficiency'' and ''seriously deficient institution'' are used to refer to institutions at two very different stages of a process: initially, an institution is notified by its State agency that it is ''seriously deficient'' in its operation of CACFP and is given an opportunity to take corrective action; later, if the institution fails to take corrective action during the specified time, its agreement is terminated by the State agency and it is placed on a list of ''seriously deficient institutions.'' Thus, in the current regulations, ''seriously deficient'' is used to describe institutions that have been told by the State agency that they have a serious management problem, and also to describe institutions that have failed to correct such a problem and whose Program agreements have been terminated.

ARPA uses the term ''disqualified'' to refer to institutions that were determined to be seriously deficient, failed to take corrective action, and whose agreements were terminated after completion of an administrative review (appeal), or when no review was requested. This rule adopts this terminology and amends § 226.2 to add definitions of ''seriously deficient'' and ''disqualified.'' This allows us to distinguish, more clearly than in the current regulations, between (1) those ''seriously deficient'' institutions that have been informed of a serious deficiency and will have an opportunity to correct the deficiency and (2) those ''disqualified'' institutions that have failed to take satisfactory corrective action within the allotted period of time, have had their Program agreement terminated, and have been placed on the National disqualified list.

What Is the Difference Between an Institution Making Administrative Errors, and an Institution that Is Seriously Deficient?

It is critical to discuss the circumstances warranting a determination of serious deficiency. To understand how and when a determination of serious deficiency must be issued, State agencies must be able to distinguish between administrative errors and ''serious deficiencies'' because, once an institution is determined to be seriously deficient, the process can culminate in only two outcomes: the correction of the serious deficiency to the State agency's satisfaction within stated timeframes, or the State agency's proposed termination of the institution's agreement.

In monitoring institutions, State agencies routinely discover management problems that warrant various types of responses. If, for example, the State agency discovers that child care facilities are serving meals that meet the Program's meal pattern but lack variety, we anticipate that the State agency would suggest ways for the sponsor to help facilities have greater variety in their menus. Similarly, if a State agency discovered that the institution made occasional recordkeeping errors, it would require correction of the procedures giving rise to these errors, or additional training of the staff making the errors. Neither of these examples would warrant determining the institution seriously deficient.

There is, however, a point at which institutions experiencing continued problems of this sort indicate serious mismanagement and therefore a serious deficiency. Problems that initially appear manageable may become serious deficiencies if not corrected within a reasonable period of time.

Is There Any Room for the Exercise of Discretion by the State Agency in Deciding Whether an Institution Is Seriously Deficient?

Yes. As discussed above, a State agency should differentiate between occasional administrative errors and systemic management problems. A single instance of some of the actions listed as serious deficiencies in this rule (for example, the misclassification of several tier II homes when the sponsor administers 500 or 1,000 homes) would not be a basis for a determination of serious deficiency, whereas a single occurrence of other actions (for example, submission of a false claim) would be. A sponsoring organization of day care homes that misclassifies two of its 1,000 homes as tier I due to clerical errors must be viewed differently than a sponsor with widespread misclassification due to fundamental errors in the organization's operation of tiering or due to its improper use of school, census, or household income data. Similarly, a sponsor that fails to pay two of its 1,000 providers on a timely basis due to a clerical error must be treated differently than a sponsor that fails to pay a significant number of its providers within five days, as required by the regulations, or is found to have used provider reimbursements to pay for administrative expenses. Thus, a State agency must consider both the type and the magnitude of the problem when deciding whether it warrants determining the institution to be seriously deficient. Similarly, as discussed in the previous portion of this preamble, when reviewing an incomplete renewal application, a State agency would generally request the submission of more or better information to complete the application

or to demonstrate that the institution was viable, capable, and accountable. If the renewing institution proved unable to document its compliance with one or more aspect of the performance standards, then the State agency would make a determination that the institution is seriously deficient.

We recognize that State agencies may encounter examples that are not readily identifiable as either ''administrative errors'' or ''serious deficiencies.'' We urge State agencies with questions regarding the proper application of these concepts to consult their FNSROs for technical assistance.

Why Are the Lists of Serious Deficiencies Not Identical for These Three Types of Action?

In order to simplify and clarify the serious deficiency process, this rule establishes separate lists of serious deficiencies applicable to new institutions (§ 226.6(c)(1)(ii)), renewing institutions (§ 226.6(c)(2)(ii)), and participating institutions (§ 226.6(c)(3)(ii).

The current list of serious deficiencies at § 226.6(c) forms the basis for the list of serious deficiencies for participating institutions. This rule revises the existing language to expand and clarify the types of problems that would lead a State agency to determine an institution seriously deficient in order to fully meet our responsibilities under ARPA. The changes for participating institutions are at § 226.6(c)(3)(ii) and include as serious deficiencies:

- Failure to properly implement and administer the day care home termination and administrative review procedures set forth at §§ 226.6(l) and 226.16(l);
- Use of provider funds to pay the sponsoring organization's administrative expenses;
- Failure to comply with the performance standards at § 226.6(b)(14);
- Failure to repay disallowed expansion funds to the State agency;
- Failure to correctly classify day care homes as tier I or tier II;
- Failure to properly train or monitor sponsored facilities;
- Failure to pay sponsored facilities in accordance with the regulations;
- The fact that the institution or any of the institution's principals have been declared ineligible for any other publicly funded program by reason of violating that program's requirements (however, this prohibition does not apply if the institution or the principal has been fully reinstated in, or is now eligible to participate in, that program, including the payment of any debts owed); and
- Conviction for any activity that occurred during the past seven years and that indicated a lack of business integrity. A lack of business integrity includes fraud, antitrust violations, embezzlement, theft, forgery, bribery, falsification or destruction of records, making false statements, receiving stolen property, making false claims, obstruction of justice, or any other activity indicating a lack of business integrity as defined by the State agency.

The additional items reflect changes in the CACFP regulations and underscore the importance of particular management functions, the failure or nonperformance of which reviews and audits have identified as common problems among institutions whose participation was ultimately terminated for mismanagement. In addition, the final two items reflect statutory changes to the NSLA resulting from the ARPA. We wish to emphasize that State agencies must not attempt to review another public entity's decision to terminate or declare ineligible an institution from a publicly funded program for violating that program's requirements. Similarly, State agencies must not review a court's action in convicting an institution or its principals of a business-related offense. The NSLA's intent in this area is to require the CACFP State agency to initiate action to terminate an institution's participation based on a final determination made by another public entity or a court.

Are There Any Serious Deficiencies That Are Not Included in the Lists?

This rule clarifies that the list of serious deficiencies for all three categories of institutions is *not* meant to be all-inclusive. Any problem that results in, or otherwise demonstrates, an institution's failure to perform its administrative or financial responsibilities under the regulations, requires a State agency to determine the institution seriously deficient. Thus, the final item in the list of serious deficiencies for all three types of institutions (''any other action affecting the institution's ability to administer the Program in accordance with Program requirements'') is intended to provide State agencies with the ability to declare an institution seriously deficient when the institution engages in action that rises to the level of a serious deficiency, but is not specifically enumerated in the applicable list of serious deficiencies for new, renewing, or participating institutions.

May an Individual Be Determined To Be Seriously Deficient?

No. Only institutions may be determined to be seriously deficient and given the opportunity to take corrective action. In most cases, an institution's completion of successful corrective action would cause a State agency to rescind the declaration of serious deficiency against the institution and discontinue any potential action that might be taken to place responsible principals or responsible individuals on the National disqualified list.

However, ARPA requires us to maintain a list of institutions, day care home providers, and individuals (i.e., responsible principals and responsible individuals, as defined in the preamble, below) that have been terminated or otherwise disqualified from Program participation. It has long been our practice to include institutions and individuals on the ''serious deficiency'' list. This step is necessary to recognize that the individuals responsible for the serious deficiencies in one corporation may, if not disqualified, simply form a new corporation in order to return to the Program.

In addition, there are circumstances under which an institution might correct its serious deficiencies while an individual employee might not. This is why the rule permits State agencies to specify different corrective action for the institution and for the responsible principals or responsible individuals. For example, an institution in which the accountant has embezzled Program funds might take corrective action by removing the accountant from his position and re-paying Program funds; depending on the circumstances of the embezzlement, that action and action to amend the institution's internal fiscal controls might constitute adequate corrective action for the institution. However, the accountant's corrective action would necessarily involve repayment of the embezzled funds to the institution, so that the institution could re-pay the State agency. If the embezzled funds were not repaid, the State agency would continue to pursue disqualification of the accountant, so that he/she would be placed on the National disqualified list and be barred from participating in CACFP until the accountant completed corrective action (i.e., has repaid the funds owed under the Program).

What Is a ''Responsible Principal or Responsible Individual''?

To address these situations and to comply with the ARPA requirements, this rule amends § 226.2 to define

''responsible principal or responsible individual'' as a principal or other individual employed by or under contract with an institution, or an uncompensated individual, who is determined to have responsibility for an institution's serious deficiency. Responsible principals and responsible individuals must be identified in the notice of serious deficiency, must receive a copy of the notice of serious deficiency, and must be provided an opportunity for an administrative review of their proposed disqualification (if adequate corrective action has not been taken by the institution and/or the individual). Part I(E) of the preamble discusses the special procedures for administrative review of the proposed disqualification of responsible principals and responsible individuals.

What Is the Effect of Determining That a New Institution Is Seriously Deficient, Considering That the Institution Had Not Yet Entered Into an Agreement With the State Agency?

As noted above, a State agency would determine that a new institution is seriously deficient only in rare circumstances, such as the submission of false information on its application. In such a case, the outcome of this process (if the new institution failed to correct the serious deficiency) is denial of the application and disqualification of the institution and the principal(s) and individual(s) responsible for the serious deficiency (unless the institution prevailed in an administrative review). Disqualification prevents these parties from participating in the Program as part of a different corporation or in a different State.

Also, a new institution may not participate in the Program pending completion of an administrative review of its proposed disqualification. ARPA's requirement that, under most circumstances (see Part I(E) below for further discussion), institutions be permitted to participate pending completion of their administrative review does not apply because the new institution was not participating in the Program at the time of the denial of its application.

What Happens if the State Agency Determines That a New Institution Has Successfully Corrected the Serious Deficiency?

If the State agency determines that the institution has taken corrective action to fully and permanently correct the serious deficiency, the State agency must offer the institution an opportunity to resubmit its application. The State agency must complete its review of the application within 30 days of receiving a complete application. We expect that in most cases the review of a resubmitted application would be faster than 30 days given that the State agency will have already made a preliminary review of the application.

What if the State Agency Determines That a Renewing Institution's Corrective Action Is Inadequate Just Before the Institution's Existing Agreement Expires? Couldn't the State Agency Simply Allow the Existing Agreement To Expire, Regardless of Whether the Institution Chooses To Pursue an Administrative Review?

No. To allow the existing agreement with a renewing institution to expire would not be consistent with the ARPA requirement that an institution have the opportunity for an administrative review prior to the termination of its agreement, nor would it be consistent with the statute's intent that, once an institution is declared seriously deficient, it must either correct the deficiency or be terminated and placed on the National Disqualified list. Thus, this rule requires the State agency to provide a short-term extension of the existing agreement, pending the outcome of the administrative review. If the administrative review official rules in favor of the State agency, the State agency must then deny the renewal application, terminate the extended agreement, and disqualify the institution and the responsible principals and responsible individuals.

In Effect, Doesn't This Mean That the State Agency's Denial of an Application From a Renewing Institution Has No Effect on the Institution's Participation, Pending the Outcome of Its Administrative Review?

That is correct. Denial of the renewal application has no impact on the institution's participation in CACFP until either (1) the time allotted for the institution to request an administrative review expires without the institution requesting an administrative review or (2) the administrative review official rules in favor of the State agency, at which time the extended agreement must be terminated. This approach provides consistency with the treatment of participating institutions determined to be seriously deficiency mid-agreement. It also may discourage a State agency from inappropriately waiting to deny the application of a renewing institution instead of taking earlier action to terminate the institution's agreement based on a serious deficiency.

If an Institution Terminates Its Agreement After Being Determined Seriously Deficient, What Action Must a State Agency Take?

Occasionally, after being notified that it is seriously deficient, an institution terminates its CACFP agreement voluntarily, ''for convenience.'' Since the institution withdrew from the Program before being terminated, some State agencies have been uncertain of their authority to ask FNS to place the institution on the disqualified list. This rule clarifies that when this situation occurs, State agencies must disqualify the institution for failing to correct the serious deficiency, after which FNS will place the institution on the National disqualified list. This will prevent an institution with serious deficiencies from using termination for convenience as a means to avoid being placed on the National disqualified list. In order to provide institutions notice of the consequence of a voluntary termination of an agreement, this rule requires State agencies to disclose this consequence in the notices of serious deficiency, suspension, proposed termination, and proposed disqualification.

3. Corrective Action Timeframes (§ 226.6(c)(4))

How Long Does an Institution Have To Correct a Serious Deficiency?

In general, this rule establishes a 90 day limit on the time a State agency may allot for corrective action. However, a State agency may allow no longer than 30 days if the serious deficiency is based on a finding that the institution engaged in unlawful practices, submitted a false or fraudulent claim or information to the State agency, or has been convicted of or concealed a criminal background. Nothing in this section is intended to permit an institution to submit an invalid claim for reimbursement during the period of corrective action, or for the State agency to pay such a claim.

May a State Agency Ever Provide an Institution With More Than 90 Days To Correct a Serious Deficiency?

Yes. For serious deficiencies requiring the long-term revision of management systems or processes, the State agency may permit the institution to have more than 90 days to complete the corrective action, as long as a corrective action plan is submitted to and approved by the State agency within 90 days (or such shorter deadline as the State agency may establish). The corrective action plan must include milestones and a definite completion date that the State agency will monitor. The finding of serious

deficiency will remain in effect until the State agency determines that the institution has corrected the serious deficiencies within the allotted time.

May a State Agency Provide an Institution With Less Than 30 or 90 Days To Correct a Serious Deficiency?

Yes. Thirty and 90 days are only the maximum amount of time a State agency may provide an institution to correct various types of serious deficiencies (except for serious deficiencies requiring the long-term revision of management systems or processes as discussed above). Depending on the nature or severity of the problem, State agencies may establish shorter periods for corrective action. For example, a sponsoring organization that fails to pay its providers in accordance with the regulations at § 226.16(g) should be given only the time until it receives and disburses the next month's provider payments to rectify the situation, not 90 days. Even when the maximum corrective action periods are used, a State agency may also establish interim deadlines (e.g., 30- and 60-day reports) for the institution to document its progress toward correcting deficiencies.

How Can the State Agency Tell if an Institution's Corrective Action Will ''Fully and Permanently Correct'' the Serious Deficiency?

At a minimum, the State agency must review documentation submitted by the institution that demonstrates the serious deficiency has been corrected in such a manner that it is unlikely to recur. Often, the State agency will have to conduct an onsite review to determine whether the corrective action has been taken and whether it fully and permanently corrected the serious deficiency.

Some corrective actions ''look good on paper,'' but do not permanently resolve the longer-term problem which gave rise to the serious deficiency that was identified. If, for example, a sponsoring organization documented that it had assigned additional staff to monitoring to address an inability to perform the required number of facility reviews, but did so by transferring claims staff and compromising its ability to properly process claims, it would have addressed one deficiency by creating another. Therefore, we urge State agencies, whenever possible, to make onsite visits to verify and evaluate an institution's implementation of corrective action.

4. Suspension of an Institution's Participation (§ 226.6(c)(5))

May a State Agency Ever Terminate a Participating Institution's Agreement Before Completion of Its Administrative Review?

Section 243(c) of ARPA amended § 17(d)(5)(D)(i) of the NSLA to state that, ''An institution * * * shall be provided a fair hearing * * * prior to any determination to terminate participation by the institution * * *'' This means that if an institution requests an administrative review of a proposed termination, its Program agreement may not be terminated until the completion of the administrative review. This is more fully discussed in Part I(E) of the preamble below.

However, §§ 17(d)(5)(C)(ii) and 17(d)(5)(D)(ii)(I) of the NSLA (as amended by § 243(c) of ARPA and § 307(c) of the Grain Standards Act) provide for the ''suspension'' of an institution's participation prior to any administrative review of the proposed termination in two situations:

- If the State agency determines that there is imminent threat to the health or safety of a participant, or the entity engages in any activity that poses a threat to the public health or safety, the State agency must suspend the institution's participation, without the opportunity for corrective action; and
- If the State agency alleges that an institution has knowingly submitted false or fraudulent claims for reimbursement, the State agency may suspend the institution's participation after completion of an independent review, but prior to the conclusion of the administrative review of the proposed termination.

The NSLA recognizes that, in some instances, continued participation pending completion of the termination proceedings and any administrative review would be inappropriate due to the danger to participants, to the public, or to the Program's integrity. The suspension of day care homes is discussed in Part III.

What Is ''Suspension''?

This rule amends § 226.2 to define ''suspended'' as the status under which an institution or day care home is temporarily ineligible for Program participation (including Program payments). Although the Program agreement has not been formally terminated, the institution or day care home may not participate in the Program during the period of suspension.

How Long May a Suspension Last?

A suspension remains in effect until the serious deficiency is corrected (in the case of a suspension based on a false or fraudulent claim) or the completion of any administrative review of the proposed termination. However, this rule stipulates that in no case may a suspension last longer than 120 days. Although the 120-day limit in § 17 of the NSLA is linked to a suspension for false or fraudulent claims, we have adopted this limit as a reasonable period of suspension for health and safety reasons as well. After 120 days, we would expect the appeal process to be concluded and would further expect that, in the case of an imminent threat to health and safety, the appropriate licensing officials would have taken action to suspend or revoke an institution's license.

May the State Agency Later Reimburse the Institution for Meals Served and Administrative Costs Incurred if the Institution Prevails in Its Administrative Review?

Yes. The institution may continue to operate at its own risk during the period of suspension. If the suspended institution prevails in the administrative review, the State agency must pay any claims for reimbursement for eligible meals served and allowable administrative costs incurred during the suspension period.

If the Suspended Institution Is a Sponsoring Organization, Will Its Sponsored Facilities Lose Their Program Benefits During the Period of the Suspension?

No. Amended § 17(d)(5)(ii)(III)(ee) of the NSLA requires the State agency ''to ensure that payments continue to sponsored centers and family and group day care homes meeting program requirements'' during the period of their sponsor's suspension.

What Does ''Immediate Suspension'' Mean When ''Public Health or Safety'' Is Threatened?

Because an institution (except for a family day care home sponsoring organization, which does not actually provide care to children) may not participate in CACFP without a license or alternate approval, and because the law uses the phrase ''imminent threat'' to health or safety, we believe that Congress intended to provide State agencies with the authority to suspend participation prior to formal revocation of the institution's license or approval. Thus, if State health or licensing officials have cited an independent center for serious health or safety

violations, the State agency must immediately suspend the center's CACFP participation prior to any formal action to revoke the independent center's licensure or approval. However, if a State agency finds unhealthy or unsafe conditions that pose an imminent threat to health or safety when conducting a review, and the licensing agency cannot make an immediate onsite visit, there may be a delay before the State CACFP agency can act. In these cases, this rule requires the State agency to immediately notify the appropriate State or local licensing and health authorities and to take action that is consistent with the recommendations and requirements of those authorities.

In situations involving threats to public health or safety, there is no opportunity for the independent center to take corrective action, nor would there be a ''notice of intent to suspend payments'' (see the next question and answer below for applicability in suspensions for submission of false or fraudulent claims). This approach recognizes the seriousness of these situations. Instead, the State agency must simultaneously provide the independent center with a notice of serious deficiency; a notice of intent to terminate participation and disqualify the institution and any responsible principals or responsible individuals; and a notice that Program payments have been suspended pending the completion of the administrative review (if one is requested by the independent center).

How Does the Process for Suspensions Based on False or Fraudulent Claims Differ From Those Based on Imminent Threats to Health or Safety?

The law now mandates suspensions whenever a State agency determines that there is imminent threat to health or safety and specifies that there is no opportunity for corrective action in these cases. The law specifies a somewhat different approach for cases in which a State agency determines that an institution has knowingly submitted false or fraudulent claims for reimbursement. In these cases, State agencies are authorized, but not required, to suspend Program participation. In addition, suspensions based on allegations of false or fraudulent claims may be made only after a review by an ''independent and impartial official.'' The law defines an independent and impartial official as a person ''other than, and not accountable to, any person involved in the determination to suspend the institution.''

What Is the Purpose of This ''Independent Review'' (Referred to as a ''Suspension Review'' in This Rule)?

The purpose of the suspension review is to allow the State agency and the institution an opportunity to present written documentation relating to the allegation of a false or fraudulent claim prior to the suspension of Program payments. The law requires the suspension review official to ''determine, based on the review, whether the State agency has established, based on a preponderance of the evidence, that such institution has knowingly submitted a false or fraudulent claim for reimbursement.'' This rule calls such a review the ''suspension review'' to distinguish it from the administrative review that an institution may seek once a suspension for false or fraudulent claims has been imposed.

Does the Law Stipulate Procedures Pertaining to the Suspension Review?

Yes. The law requires that, in making his or her determination, the suspension review official consider written documentation submitted by the State agency and the institution. This rule requires State agencies to give institutions at least ten days to request an initial suspension review and to submit written documentation opposing the suspension.

What Happens if the Suspension Review Official Determines That the Proposed Suspension Is Not Appropriate?

No action is taken to suspend the institution's Program participation. However, the State agency's serious deficiency determination remains in effect and the institution must still take corrective action within the specified timeframe. If the State agency determines that the corrective action did not fully and permanently correct the serious deficiency, the State agency would proceed to send a notice of proposed termination and proposed disqualification. The institution would then have the opportunity to request an administrative review of the proposed actions. The suspension review is a limited review at a preliminary stage and only determines whether Program participation and Program payments continue. The suspension review does not resolve the question of whether the institution has been seriously deficient, whether the corrective action is adequate, or whether the proposed termination of the institution's agreement is justified.

What if the Suspension Review Official Upholds the State Agency, but the Administrative Review Official Later Upholds the Institution?

In that case, the institution may claim retroactive reimbursement for eligible meals served and any allowable expenses incurred during the suspension period.

5. FNS Determination of Serious Deficiency (§ 226.6(c)(6))

Under the current regulations at § 226.6(c), FNS may independently determine that an institution is seriously deficient. This rule retains this authority, but moves it to § 226.6(c)(6). This rule also revises the procedures for FNS determinations of serious deficiency to make them parallel to the revised procedures for State agencies' determinations of serious deficiency and adds procedures for FNS suspending an institution if there is an imminent threat to the health and safety of participants or the institution has submitted a false or fraudulent claim.

We do not envision the frequent use of this authority. Generally, State agencies will be in the best position to detect and take action with respect to seriously deficient institutions. Even when dealing with serious deficiencies detected during audits or investigations conducted by USDA's Office of Inspector General, it is the State agency, and not FNS, that will declare the institution seriously deficient, monitor corrective action, and take any additional actions that may be warranted. However, in dealing with multi-State or multi-regional institutions, FNS may be in the best position to coordinate actions in response to the serious deficiency. In addition, because we are now more likely to participate with State agencies in joint reviews of institutions, it is possible that we would declare a serious deficiency if the State agency was unwilling to do so.

6. National Disqualified List (§§ 226.2 and 226.6(c)(7))

The current regulations state that FNS will maintain a list of institutions whose participation has been terminated or whose application has been denied due to serious deficiencies. Section 243(c) of ARPA added a new § 17(d)(5)(E) to the NSLA, which expands the list's scope by requiring the Secretary to ''maintain a list of institutions, sponsored family or group day care homes, and individuals that have been terminated or otherwise disqualified from participation in the program,'' and make the list available to

State agencies for their use in reviewing applications to participate.

What Is the National Disqualified List?

As discussed in Part I(D)(2) of this preamble, this rule adopts ARPA's approach of distinguishing between seriously deficient institutions and disqualified institutions, individuals, and day care homes. In furtherance of this approach, this rule amends § 226.2 to define the list of institutions, responsible principals and responsible individuals, and day care homes disqualified from Program participation as the ''National disqualified list.''

How Does an Entity Get Put on the List?

An institution or day care home will be placed on the list only after having been declared seriously deficient, having an opportunity for corrective action, failing to take corrective action, and losing an administrative review (or failing to request an administrative review in a timely manner). Similarly, responsible principals and responsible individuals must first be named as responsible for an institution's serious deficiency(ies), receive an opportunity for corrective action, fail to take corrective action, and lose an administrative review (or fail to request an administrative review in a timely manner). At this point, the institution, day care home, or responsible principal or responsible individual is disqualified from Program participation and placed on the National disqualified list, and is prohibited from participating in the Program as an institution, sponsored center, day care home, or principal until removed from the list.

What if an Institution Participating in Several States Is Disqualified by FNS or a State Agency in Another State?

If an institution that participates in the Program in more than one State is disqualified from the Program by FNS or another State agency, any State agency holding an agreement with the institution must also terminate the institution's agreement. This action must be taken within 45 days of the date of the disqualification by FNS or the other State agency. Because the institution will have already had the opportunity for an administrative review covering the failure to correct the serious deficiencies that led to the initial disqualification, other State agencies are prohibited from offering the institution an administrative review of the termination action to be taken by the other State agencies. These requirements are in § 226.6(c)(6)(ii)(G) (disqualifications by FNS) and § 226.6(c)(3)(i) (disqualifications by another State agency).

How Long Will an Entity Remain on the List?

Institutions and responsible principals and responsible individuals will remain on the list until FNS, in consultation with the appropriate State agency, determines that the serious deficiency(ies) that led to their placement on the list has(ve) been corrected, or until seven years have elapsed since they were disqualified from participation. Day care homes will remain on the list until the State agency determines that the serious deficiency(ies) that led to their placement on the list has(ve) been corrected, or until seven years after they were disqualified from participation.

Similar to the past performance and criminal background eligibility criteria discussed in Part I(A)(4) of the preamble, above, we established seven years as the maximum period of an institution's or individual's disqualification. As noted previously in this preamble, the seven-year period underscores the importance of ensuring Program integrity, while recognizing the need to provide these individuals and institutions with a ''second chance'' at potential Program participation following a predictable period of time. However, if the institution, responsible principal or responsible individual, or day care home has failed to repay debts owed under the Program, they will remain on the list until the debt has been repaid.

What Will Happen to the Institutions and Individuals on the Prior FNS List?

Institutions and individuals placed on the FNS list of ''seriously deficient'' institutions prior to publication of this rule will be transferred to the new National disqualified list and will remain on that list until FNS determines, with the concurrence of the appropriate State agency, that the serious deficiency(ies) that led to their placement on the list has(ve) been corrected, or until July 29, 2009 (i.e. seven years after the effective date of this rule). As noted previously in this preamble, establishing the seven year period for institutions and individuals already on the list brings the previous list into conformance with the requirements being promulgated in this rule, and provides these institutions and individuals with a bar on their Program participation for a predictable period of time, before automatic removal from the list. As with the institutions or individuals placed on the National disqualified list after publication of this rule, if the institution or individual on the existing list fails to repay debts owed under the Program, they will remain on the list until the debt has been repaid.

What Happens to Sponsored Facilities When Their Sponsoring Organization's Agreement Is Terminated?

After the State agency issues a notice of proposed termination to a sponsoring organization, it will work with other sponsoring organizations in the State to ensure that there is no disruption of Program benefits to sponsored facilities that will be affected when their sponsoring organization's agreement is terminated. As noted in Part III(C) of this preamble, below, ARPA's restriction on day care home transfers from one sponsoring organization to another specifically allows a State agency to waive the provision for a day care home when its sponsoring organization's Program agreement has been terminated.

What About Sponsored Centers?

ARPA did not require us to establish a procedure for terminating the agreements of centers that participate under a sponsoring organization. However, in some instances the person responsible for a sponsoring organization's serious deficiency(ies) might be a person employed by or otherwise associated with a sponsored center, rather than with the sponsoring organization itself. Similarly, an institution that is on the National disqualified list as an independent center should not be able to avoid the effect of that disqualification by re-entering the Program as a sponsored center. Finally, an individual who is on the National disqualified list should not be permitted to participate in the Program as a family day care home provider or as a principal in a sponsored center or an independent center.

Therefore, this rule makes two changes designed to prevent such situations, any of which pose a threat to the Program's integrity. First, this rule amends § 226.2 to further define ''responsible principal or responsible individual'' to include a principal or individual associated with a sponsored center who is responsible for the center sponsor's serious deficiency(ies). This means that anyone responsible for the center sponsor's serious deficiency(ies) is subject to a proposed disqualification, regardless of whether he or she is associated with the sponsoring organization of centers, or with a sponsored center. Second, this rule amends §§ 226.16(b) and 226.6(b)(12) to prohibit a sponsoring organization from

submitting an application on behalf of a sponsored facility (or a State agency from approving such an application) if the facility itself or one of its principals is on the National disqualified list. This will prevent family day care homes or sponsored centers on the National disqualified list from re-entering the Program. It will also prevent an individual on the list for actions committed while associated with a sponsor of centers from re-entering the Program as a sponsored center, or an individual on the list for actions committed while a principal in a sponsored center from re-entering the Program as a principal in another institution (an independent center or a sponsoring organization of homes and/or centers).

Why Not Just Include Day Care Homes and Sponsored Centers on Separate State-Level Lists?

In most cases, a State-level list would be sufficient to ensure that disqualified institutions, sponsored centers, day care homes, and responsible principals and responsible individuals do not participate in the Program, either directly or as a principal. In some cases, though, these entities may attempt to evade their disqualification by seeking to participate in the Program in a different State. In order to address this situation, and for consistency and simplicity, all disqualified entities will be included on a single National-level list. For the same reason, this rule requires State agencies and sponsoring organizations to check the National disqualified list (rather than a State-level list) before approving an application from an institution, sponsored center, or day care home.

As noted in § 226.6(c)(7), we will make the National disqualified list available to all State agencies and all sponsoring organizations. This will permit State agencies and sponsoring organizations to consult a single list when determining whether an institution, sponsored center, or day care home is eligible for Program participation. To facilitate use of the National disqualified list, we are currently pursuing plans to make the list available in a password-protected electronic format.

7. State Agency List (§§ 226.2 and 226.6(c)(8))

What Is the State Agency List?

The State agency list will include those day care homes terminated for cause (see discussion of serious deficiency and termination procedures for day care homes in Part III(F) of the preamble, below) and those institutions and responsible principals and responsible individuals in the State that have been declared seriously deficient. In the interest of preserving flexibility for State agencies, the list may be kept in paper form, electronic form, or in retrievable, individual case files within the State agency. In the case of institutions and responsible principals and responsible individuals, the list will include information about all of the possible results after the State agency's transmission of a notice of serious deficiency (along with an identification of the principals and/or individuals responsible for the serious deficiency): successful corrective action; unsuccessful corrective action followed by notification of proposed termination and/or disqualification; suspension; administrative review; and agreement termination. This rule amends § 226.2 to add a definition of ''State agency list'' (either as actual lists or retrievable records) and adds § 226.6(c)(8), which requires each State agency to maintain a State agency list.

Why Bother With a Separate State-Level List?

A State-based list will be useful for analytic purposes. Although the National disqualified list will provide a complete picture of all institutions, individuals, and day care homes that have been *disqualified* and are ineligible for Program participation, the National list will not capture a great deal of additional information that is necessary for State agencies and FNS to assess the full impact of the ARPA provisions. For example, many institutions will be declared seriously deficient but will never appear on the National list, either because they successfully completed corrective action or because an administrative review official overturned the State agency's proposed termination of the institution's agreement. In order to properly assess ARPA's impact on Program management and integrity, it is critical for State agencies and FNS to have information about the number of institutions declared seriously deficient that were never placed on the National disqualified list, as well as the ways in which serious deficiencies were ultimately resolved short of termination. The State agency list established in this rule will capture information about the ultimate disposition of each case in which an institution was declared seriously deficient. The State agency list will be made available to FNS by the State agency upon request, so that it is possible to analyze National trends regarding the implementation of the ARPA provisions.

Why Is It Necessary for State Agencies and FNS To Have This Information?

The changes to serious deficiency, corrective action, administrative review and termination procedures mandated by ARPA were extensive, and had the potential to profoundly impact the Program. FNS must be able to quantify the impact of these changes, in order to assess the frequency with which certain actions are being taken, as well as the effectiveness of the changes. State agencies must also be able to have data that will allow them to assess their own implementation of these changes, identify any additional changes needed, and identify trends and training needs for State agency or institution staff.

What Must Be Done When the Rule Requires the State Agency To ''Update'' the State Agency List?

For each institution declared seriously deficient, and for each institution filing a request for an administrative review, the State agency will ''update'' the list whenever the next stage of action occurs. For example, when an institution is declared seriously deficient, the State agency is required to add the institution to the State agency list, as well as the basis for the determination of serious deficiency. Then, if the institution fully and permanently corrects the serious deficiency within the allotted time, the State agency records on the list that the corrective action is complete. Similarly, an institution requesting an administrative review of an overclaim would be placed on the list, as well as the result of the administrative review.

What About State Agencies That Already Have Lists of Disqualified Day Care Homes?

Any State agency that has a list of disqualified day care homes on July 29, 2002 may continue to prohibit participation by those day care homes. However, as with those institutions and individuals on the prior FNS list of ''seriously deficient'' institutions, the State agency must remove a day care home from its prior list no later than the time at which the State agency determines that the serious deficiency(ies) that led to their placement on the list has(ve) been corrected, or July 29, 2009 (i.e. seven years after the effective date of this rule). However, if the day care home has failed to repay debts owed under the Program, it must remain on the list until the debt has been repaid.

E. Administrative Reviews for Institutions and Responsible Principals and Responsible Individuals (§§ 226.2 and 226.6(k))

What Changes to the Administrative Review Procedures for Institutions Were Mandated by ARPA?

Before ARPA, § 17(e) of the NSLA required State agencies administering CACFP to ''provide, in accordance with regulations issued by the Secretary, a fair hearing and a prompt determination to any institution aggrieved by the action of the State as it affects the participation of such institution * * * or its claim for reimbursement under this section.'' Current CACFP regulations at § 226.6(k) establish the minimum requirements for such administrative reviews. However, § 243(c) of ARPA added § 17(d)(5)(D)(i) to the NSLA to require that, ''An institution or family or group day care home shall be provided a fair hearing in accordance with subsection (e)(1) [§ 17(e)(1) of the NSLA] *prior* to any determination to terminate participation by the institution or family or group day care home under the program'' (emphasis added). This provision substantially changes the sequence of events leading up to an institution or day care home's termination from the Program and for the first time establishes a requirement to offer administrative reviews to day care homes. The effect of this change on day care homes is discussed in Part III(F) of this preamble, while the effect on the termination of institutions' agreements is discussed here.

Under regulations in effect until October 18, 2000 (the required implementation date for ARPA's CACFP amendments on termination and administrative reviews), if an institution was determined seriously deficient and failed to complete the required corrective actions within the allotted time, the State agency notified the institution that its Program agreement was terminated and that the institution could seek an administrative review of this action. All Program payments to the institution ceased on the effective date of the termination notice. If the institution sought an administrative review of the termination, and its participation was restored as a result of the administrative review, it could seek reimbursement for eligible meals served and allowable administrative costs incurred during the period between the effective date of the termination and the decision on the administrative review.

Under the new procedures mandated by ARPA, a different sequence of events takes place. If a State agency determines that a seriously deficient institution failed to take the required corrective action within the allotted time, it notifies the institution that the State agency is proposing to terminate the institution's agreement and proposing to disqualify the institution and the responsible principals and responsible individuals. The State agency must also notify the institution and the responsible principals and responsible individuals that they may seek an administrative review of the proposed actions. However, if an administrative review is requested, the State agency must continue to pay any valid unpaid claims for reimbursement for eligible meals served and allowable administrative expenses incurred, unless the institution has been suspended from participation based on health or safety violations or false or fraudulent claims (as discussed in Part I(D)(4) of this preamble). Even if Program payments are suspended, the actual termination of the institution's agreement does not occur until after the administrative review official's decision is rendered.

Did ARPA Change the Actions That Are Subject to Administrative Review?

Yes. As noted above, the new procedures mandated by ARPA require State agencies to offer an administrative review to an institution prior to the termination of its agreement. This change requires several revisions to § 226.6(k) dealing with the actions that are subject to administrative review. These mandated changes also provide an opportunity to reorganize § 226.6(k) and to make other necessary changes to § 226.6(k) governing administrative reviews.

First, this rule groups all actions that are subject to administrative review in § 226.6(k)(2). Second, this rule clarifies that it is the notice of proposed termination of an institution's agreement that is subject to administrative review. The termination of the agreement does not occur until after the administrative review, and then only if the institution did not prevail. As a result of ARPA, the actual termination of the institution's agreement is no longer subject to administrative review because the administrative review has already occurred.

Third, this rule clarifies in § 226.6(k)(2)(iv) that State agencies must provide responsible principals and responsible individuals an administrative review of any proposed disqualification (see below for a further discussion of this issue). Finally, this rule makes clear in § 226.6(k)(2)(viii) that the recovery of an advance is subject to administrative review (see the additional discussion of the recovery of advances under ''What is the effect of the State agency action while the administrative review is pending?'')

Are There Any Actions That Are Not Subject to Administrative Review?

Yes. Even under the current regulations State agencies are not required to provide an administrative review of all actions. However, State agencies have informed us that, absent a clear delineation in the regulations of what is and is not appealable, they sometimes find themselves defending actions that were not intended to be appealable. This rule clarifies which actions are not subject to administrative review and groups them together in § 226.6(k)(3).

Are Serious Deficiency Determinations Subject to Administrative Review?

No. Currently, seriously deficient determinations are not subject to administrative review. This does not change as a result of ARPA, which anticipates an administrative review only after an institution is notified that its corrective actions to resolve a serious deficiency were incomplete or inadequate. A serious deficiency finding only serves to inform an institution that it is out of compliance with Program requirements and that certain other actions will occur if the institution fails to take corrective action within the allotted time. There is no effect on the institution's valid claim for reimbursement or participation unless it fails to take corrective action to correct the serious deficiency within the allotted time.

Do State Agencies Have To Provide Administrative Reviews to Responsible Principals and Responsible Individuals?

Yes. As noted above, this rule clarifies in § 226.6(k)(2)(iv) that State agencies must provide responsible principals and responsible individuals an administrative review of any notice of proposed disqualification. However, in most instances the institution's underlying serious deficiencies will be inextricably connected with the proposed disqualification of the responsible principal or responsible individual. As a result, this rule specifies in § 226.6(k)(8) that the State agency must in most instances combine the administrative review for the responsible principal or responsible individual with the administrative review for the institution.

There may be rare instances in which the interests of the institution and the

responsible principal or responsible individual conflict. This might occur when the person responsible for the institution's serious deficiency acted wholly without the knowledge of any of the institution's principals and without benefit to the institution. In such cases, and at the administrative review official's discretion, separate administrative reviews may be held if the institution does not request an administrative review or if either the institution or the responsible principal or responsible individual demonstrates that their interests conflict.

When Handling an Administrative Review, Are There Standard Procedures That All State Agencies Must Follow?

Yes. The current CACFP regulations permit State agencies either to establish their own administrative review procedures (subject to several basic requirements) or to follow the more detailed administrative review procedures set out in § 226.6(k)(1)–(12). This has caused some confusion over the years. This rule requires State agencies to develop their own administrative review procedures consistent with certain requirements specified by this rule. The majority of those requirements are the same as are found in § 226.6(k)(1)–(12) of the current regulations. We hope that this approach will result in greater uniformity throughout the Nation, while still permitting State agencies some flexibility. This uniformity will help ensure consistent action in all cases involving violations of Program requirements, and should lessen the chances of having administrative review decisions overturned by the courts. Uniform practice will be especially useful to institutions operating in more than one State and is imperative at a time when we are working with State agencies to improve Program management. These uniform standards are set forth at newly-reorganized § 226.6(k)(5).

Are There Any Changes to the Current Administrative Review Procedures?

Yes. In addition to requiring all State agencies to comply with the procedures in §§ 226.6(k)(1)–(12) of the current regulations, this rule makes minor changes to the language set forth at current §§ 226.6(k)(6) and (7), as discussed below.

Section 226.6(k)(6) currently requires that State review officials be independent and impartial. Institutions have sometimes argued that the administrative review officials are not truly ''impartial'', either because they are in the same organization as the official issuing the termination decision, or because the institution can only contact the hearing official by first contacting the State agency. It has long been our position that the mere fact that an administrative review official is in the same organization as the official who issued the action under review does not, by itself, undermine the administrative review official's impartiality. This rule makes clear in § 226.6(k)(4)(vii) that ''independent and impartial'' means that a person is prohibited from serving as an administrative review officer in any case in which he or she was involved in the action that is the subject of the administrative review, or if he or she has a direct personal or financial interest in the outcome of the administrative review. This rule also requires State agencies to permit institutions and responsible principals and responsible individuals to contact the administrative review official directly if they so desire.

Section 226.6(k)(7) currently requires that State review officials base their determinations on materials provided by the appellant and the State agency and on Program regulations. Some administrative review officials have read this to mean that they did not need to follow requirements in the statute or in other Federal regulations or Federal or State interpretations of those requirements (such as policy memoranda or guidance). This provision was meant to make clear that administrative review officials are to base their decision solely on the application of Program requirements to the facts in the case, as reflected in the submissions by the institution and the State agency. It is not the administrative review official's role to determine the validity of existing Federal or State requirements. These are legal issues for the courts. We have clarified this point in this rule (§ 226.6(k)(4)(viii)).

What Is an ''Abbreviated'' Administrative Review?

ARPA does not specify the type of ''fair hearing'' that must be provided to institutions. We have determined that there are two types of actions for which requiring a ''full'' administrative review (with the right to a hearing, etc.) is not warranted. The first is the denial of a new or renewing institution's application because the institution or any of its principals are on the National disqualified list (§ 226.6(b)(12)), have been declared to be ineligible for another publicly funded program during the prior seven years (§§ 226.6(b)(13) and 226.15(b)(7)), or have been convicted of an activity in the past seven years that indicated a lack of business integrity (§§ 226.6(b)(14) and 226.15(b)(8)). In each of these cases, the institution or the principals will have already had an opportunity to refute the charge (i.e. the action that led to the placement on the National disqualified list, the ineligibility determination for the other public program, or the criminal conviction). To offer a ''full'' administrative review in this case would lead to a false expectation that the institution or responsible principal or responsible individual would get a second chance to prove that the underlying action did not occur. These issues will have been fully reviewed by the appropriate authority and we do not intend to permit a second administrative review. Nor do we see the benefit of requiring a ''full'' administrative review in cases in which the only issue will be whether or not the affected party is really the same party that appears on the National disqualified list, was declared ineligible for another publicly funded program, or was convicted.

The second type of action is the denial of a new or renewing institution's application or the termination of a participating institution's agreement based on the submission of false information on the institution's application, including the concealment of a criminal background (§§ 226.6(c)(1)(ii)(A), (c)(2)(ii)(A), (c)(3)(ii)(A)). Again, these cases present only a narrow factual issue of whether the information submitted is indeed false. This issue can be adequately addressed through written submissions.

For these reasons, this rule limits the administrative review of these areas to a review of written submissions concerning the accuracy of the State agency's determination that: (1) the institution, one of its sponsored facilities, or one of the principals of the institution or its facilities is on the National disqualified list, has been determined ineligible to participate in another publicly funded program, or has been convicted of an offense indicating a lack of business integrity; or (2) information submitted on the institution's application is, in fact, false. We call this an ''abbreviated'' administrative review.

Part II. State Agency and Institution Review and Oversight Requirements

ARPA mandated three changes to State agency and sponsoring organization monitoring requirements. These changes require that:

- Sponsoring organizations conduct at least one unscheduled (unannounced)

review of each facility they sponsor in a three-year period;

- Sponsoring organizations employ ''an appropriate number of monitoring personnel based on the number and characteristics'' of facilities they sponsor; and
- State agencies review each institution in their State no less frequently than once every three years.

These changes are discussed below.

A. Unannounced reviews

Was It the Intent of ARPA To Reduce Current Requirements for Sponsoring Organization Reviews of Their Facilities?

No. Section 243(b) of ARPA amended § 17(d)(2) of the NSLA to require us to establish a policy under which unannounced reviews are made to sponsored facilities at least once every three years, and at least one review is made to each facility each year. Currently, § 226.16(d) of the regulations requires sponsoring organizations to review each facility they sponsor at least three times each year, unless they obtain permission to perform an average of three reviews for all of their facilities. When considering the Conference Report on ARPA, Senator Lugar, then-Chairman of the Senate Agriculture Committee, emphasized that the Department should view the monitoring requirements in ARPA as minimums, and may strengthen the requirements as necessary (*Congressional Record,* May 25, 2000, S. 4439). This rule retains the current regulatory requirement of three reviews per facility per year.

What Is an Unannounced Review?

This rule adds a definition to § 226.2 stating that an ''unannounced review'' is a review for which no prior notice is given to the facility or institution. We also wish to stress that State agencies and sponsoring organizations should not routinely follow the same cycle in conducting unannounced reviews (e.g., always reviewing providers in a particular town or neighborhood during the last two weeks of a calendar quarter). Instead, the pattern of unannounced reviews should be unpredictable, to ensure that the review is genuinely unannounced.

1. Unannounced Reviews by Sponsoring Organizations (§§ 226.2 and 226.16(d)(4))

Must a Sponsoring Organization Make All of Its Facility Reviews Unannounced?

No. Although some State agencies require sponsoring organizations to make all facility reviews unannounced, many sponsors in other States use scheduled reviews as opportunities to provide Program training and nutrition education. Promulgating a Federal requirement to make all reviews unannounced would take away this flexibility for State agencies, a concern especially in day care homes where providers need advance notice in order to participate in training during a monitoring review. Therefore, this rule amends § 226.16(d)(4) to require that two of the three annually required reviews of sponsored facilities be unannounced. If the third review is scheduled, rather than unannounced, then the sponsor may use that visit to provide any needed training. If the sponsor chooses to make all three annual reviews unannounced, or the State agency requires that all reviews be unannounced, the training needs of the sponsored center or day care home may be met in another manner (e.g., by providing training at a convenient location outside of normal business hours, or by providing on-line training through the Internet), or by making an additional visit to the facility to provide training.

Will Unannounced Reviews Be Effective? What if the Provider Is Not Home When the Unannounced Review Is Made?

A day care home provider's unexplained absence could indicate a serious accountability problem that the sponsor needs to address. In order to minimize this possibility, this rule adds § 226.18(b)(14) to require that a provider notify their sponsoring organization in advance whenever the day care home provider is planning to be out of their home with the children during the meal service period. This will better enable sponsoring organizations to plan their unannounced reviews in the most cost-effective manner possible. If a provider fails to notify the sponsor and an unannounced review is made during a scheduled meal time, claims for meals that would have been served during the unannounced review must be disallowed.

Sponsoring organizations or State agencies may establish additional requirements regarding unannounced reviews. Sponsoring organizations facing high travel costs to review day care homes, and sponsoring organizations concerned about the potential for Program abuse by providers who routinely claim to provide meal service to children outside their homes, may choose to impose more stringent requirements than those promulgated in this rule.

The primary purpose of this provision is to spare sponsoring organizations unwarranted expense in conducting unannounced reviews and not finding the provider at home, especially when the sponsor monitor must travel long distances to conduct the review. In addition, the requirement to notify the sponsoring organization when a provider is planning to be out of her home during the meal service period is essential to Program integrity because it will allow the sponsor the option to review the off-site meal service if it so desires.

Does This Rule Impose Any Other Requirements Relating to Unannounced Reviews?

Yes. This rule amends § 226.16(d)(4)(iv) to address the situation in which a sponsoring organization detects one or more serious deficiency in a review of a facility. Serious deficiencies are those listed in § 226.16(l)(2), regardless of the type of facility. In such cases, this rule requires the next review of the facility to be unannounced.

What Procedures Must Be Followed When a Sponsoring Organization Makes an Unannounced Review?

In recognition of the unique nature of providing day care, especially in one's private residence, and in order to protect the privacy of Program operators and the children they serve, this rule establishes several procedural requirements for unannounced reviews. We also strongly recommend that State agencies consult their legal counsel to ensure that any State statutes or administrative rules are reflected in the State agency's procedures for conducting unannounced reviews in the CACFP. However, at a minimum, the requirements pertaining to unannounced reviews specified in this regulation must be met. Thus, this rule amends § 226.16(d)(4)(vi) to specify that unannounced reviews must be made only during the facility's normal hours of child or adult care operations, and monitors making such reviews must provide photo identification that demonstrates that they are employees of the sponsoring organization.

2. Unannounced Reviews by State Agencies (§ 226.6(m))

Will This Rule Require That State Agencies Make Unannounced Reviews to Facilities?

Yes. However, a State agency making unannounced facility reviews could experience greater difficulty than a sponsoring organization would in making the same review. These

difficulties largely stem from the fact that State agencies are generally located farther away from the facilities being reviewed than are sponsors, thus increasing the review's potential cost. Nevertheless, OIG's audit and investigative work strongly suggests the need for some level of unannounced facility reviews by State agencies as well, because those sponsors that pay inadequate attention to accountability issues are less likely to uncover serious Program irregularities at their sponsored facilities. Therefore, this rule requires State agencies to conduct some unannounced facility reviews as part of their larger review of a sponsoring organization.

What Percentage of Facility Reviews Conducted by a State Agency Must Be Unannounced?

In recognition of the potential difficulties State agencies may face in conducting unannounced reviews of sponsored facilities, this rule amends § 226.6(m) [previously § 226.6(l)] to require that a minimum of 15 percent of a State agency's required facility reviews be unannounced. Thus, in a State with 10,000 participating sponsored facilities, with a requirement to conduct at least 800 facility reviews in a year, this rule requires that a minimum of 120 of those reviews (15 percent of 800) be unannounced. The State agency could decide whether it would be better to conduct a proportionate share of these reviews as a part of each sponsor review, or whether facilities sponsored by organizations with problematic Program records might be more in need of unannounced reviews.

Does This Rule Require State Agencies To Conduct Unannounced Reviews of Institutions?

No. However, we encourage State agencies to conduct unannounced reviews of institutions when appropriate. The results of OIG's audits have persuaded us that unannounced reviews of institutions can be very effective at detecting serious management and accountability issues that might be difficult to detect if the review were announced. Therefore, this rule adds the requirement that State agencies modify their current agreements with institutions to notify institutions of the right of the State agency, the Department, and other State or Federal officials to make announced or unannounced reviews of their operations; that unannounced reviews will be held during the institution's normal hours of child or adult care operations; and that anyone making such reviews must show photo identification that demonstrates that they are employees of one of these entities.

3. Notification Requirements (§§ 226.6(f)(1), 226.16(d)(4)(v), and 226.18(d)(1))

Are There Any Notification Requirements Related to Unannounced Visits?

Yes. This rule requires in §§ 226.6(f)(1), 226.16(d)(4)(v), and 226.18(d)(1) that State agencies and sponsoring organizations notify institutions and facilities that they are subject to unannounced visits by the sponsoring organization, the State agency, the Department, or other State or Federal officials. State agencies must include this notice in their agreements with institutions. For sponsors of day care homes, this rule amends § 226.18(b)(1) to require sponsoring organizations to include in their sponsor-day care home agreements a provision stating that they will be reviewed on an unannounced basis, that they will make unannounced reviews only during the facility's normal hours of child care operations, and that monitors conducting unannounced reviews will have photo identification which demonstrates that they are employees of the sponsoring organization. Sponsoring organizations must amend their agreements with day care homes that are participating in the Program on July 29, 2002 to include this notice of unannounced reviews no later than August 29, 2002.

Because sponsors of centers are not required to enter into agreements with their sponsored centers, this rule amends § 226.16(d)(4)(vii) to require such sponsors to provide their centers written notification of this information about unannounced visits. For sponsored centers participating on July 29, 2002, the notice must be sent no later than August 29, 2002. For sponsored centers that are approved after July 29, 2002, the sponsoring organization must provide the notice before meal service under the Program begins.

B. Sponsor Monitoring Staff (§§ 226.6(f)(2), 226.16(b)(1), and 226.16(d)(4))

What Are ARPA's Requirements Regarding the Staffing of the Monitoring Function by Sponsoring Organizations?

Section, § 243(a)(8)(B) of ARPA amended § 17(a) of the law to require that, ''in the case of a sponsoring organization, the organization shall employ an appropriate number of monitoring personnel based on the number and characteristics of child care centers and family or group day care homes sponsored by the organization, as approved by the State (in accordance with regulations promulgated by the Secretary), to ensure effective oversight of the child care centers and family or group day care homes. * * *''

What Approaches Were Considered To Implement This Requirement?

In assessing alternative means of implementing this requirement, the Department considered four possible approaches:

- Requiring a specific number of facilities that each sponsor monitor would be responsible for reviewing (e.g., each monitor must review 50 facilities);
- Requiring a ceiling on the number of facilities each sponsor monitor would be responsible for reviewing (e.g., each monitor may review no more than 75 facilities per year);
- Setting no numeric requirements, but requiring each State agency to assess the adequacy of staff and resources devoted to the monitoring function when reviewing the sponsor's management plan; or
- Establishing a broad range of facilities per monitor, and requiring the State agency to determine where, within that range, each sponsor's ratio of monitors to facilities should fall.

Which of These Approaches Does This Rule Incorporate, and Why?

Although each of these alternatives has certain strengths, we chose the last alternative—setting a range of facilities per monitor and requiring the State agency to determine where, within that range, each sponsor's ratio of facilities should fall. This approach provides State agencies and sponsoring organizations with flexibility in meeting the requirement, while still setting some broad numerical parameters for sponsors and State agencies to work within. This rule establishes slightly different staffing requirements for sponsoring organizations of day care homes (50 to 150) and centers (25 to 150), as explained below.

Given the different administrative demands faced by sponsors in different areas, we do not believe that either of the first two alternatives—establishing a single number of homes per monitor, or setting a ''ceiling'' on the number of facilities to be monitored—could be productively applied to every sponsoring organization across the country. For example, due to travel time, sponsoring organizations that recruit in rural areas (as encouraged by § 17(f)(3) of the NSLA) could need more

monitors to properly monitor the same number of homes than a solely urban-based sponsoring organization would need to properly monitor the same number of providers. Similarly, sponsoring organizations with larger numbers of new and/or non-English speaking providers would likely incur higher per-home costs in monitoring than sponsors without such homes. Finally, although the third alternative provides maximum flexibility to State agencies, it does not represent a meaningful change from pre-ARPA requirements and lacks the specificity that some State agencies desire, and that we believe Congress intended, in passing this provision.

What Is the Specific Requirement for Sponsoring Organizations of Day Care Homes?

This rule amends § 226.16(b)(1) to require that every sponsoring organization devote the equivalent of one full-time staff person to monitoring for each 50–150 day care homes it administers.

How Did USDA Decide on 50–150 as the Appropriate Range for Sponsoring Organizations of Day Care Homes?

We started by estimating the amount of time that a day care home sponsoring organization would spend carrying out the Program's review requirements (an average of three reviews per home per year, two of which are unannounced). The Early Childhood and Child Care Study (1997) reported that, on average, day care home sponsoring organizations made five reviews or visits per home per year. If this is accurate, sponsoring organizations of day care homes may respond to the unannounced review requirement in this rule, and the other changes in the proposed rule published on September 12, 2000, by making fewer, but more extensive, reviews and devoting more time to the review and analysis of accountability-related documents such as daily meal counts, daily attendance logs, and enrollment forms. In addition, the conduct of unannounced reviews may add some time to the performance of a typical review, since some providers will not be home when reviews are conducted and others will not have required records in order prior to the review. In urban areas, a provider's unavailability is less likely to be a major problem, since other day care homes in the vicinity can be reviewed. However, in rural areas, where day care homes may be more widely dispersed, a provider's unexpected absence could add a significant amount of time to the conduct of the average review. Overall, we estimate that day care home sponsoring organizations will, on average, spend about 12–15 hours per home annually implementing the minimum monitoring requirements being promulgated in this rule: three reviews per year, two of which are unannounced, including pre-review scheduling and preparation, travel related to the review, conduct of the review, and post-review work.

Using a 2,080 hour work year (less time off for vacation, illness, and holidays), we estimate that the average full-time monitor would be able to perform a minimum of three thorough reviews per year, which include all the review elements being proposed in this rule, for between 120–160 day care homes. However, taking into account the possible variation in the *types* of day care homes being sponsored, this rule requires that each full-time monitor be responsible for reviewing between 50 and 150 day care homes per year, depending on the geographic dispersion, experience level, and overall composition of the sponsoring organization's providers.

What Is the Staffing Standard for Monitoring by Sponsoring Organizations of Centers?

Although the Early Childhood and Child Care Study states that center sponsors currently spend about 60 hours per year monitoring each sponsored child care center, this figure seems implausible compared to the estimates of time spent by sponsors in monitoring each day care home. Part of the difference is accounted for by factors extraneous to the CACFP. For example, Head Start centers participating in CACFP (which account for about a third of all CACFP centers) are visited an average of 26 times per year (or approximately once for every week and a half of operation, since many Head Start centers do not operate on a year-round basis). However, these reviews or visits focus on Head Start, rather than CACFP, requirements; the proportion of review time devoted to CACFP meal service and recordkeeping requirements is not known, but is likely to account for a fairly small fraction of the overall time spent on the review. Similarly, a significant minority of center sponsors reported reviewing or visiting their centers once or more per week, but this was due to the fact that the sponsor and center were co-located (i.e., housed at the same location).

We believe that, once Head Start and co-located centers are removed from the equation, the average center sponsor can complete the requirement for three reviews per year in about the same amount of time that home sponsors spend in monitoring their providers: roughly 12–15 hours per year, including review preparation and follow-up. Therefore, this rule amends the introductory text of § 226.16(d)(4), and §§ 226.16(d)(4)(v) and 226.6(f)(2), to require a sponsoring organization of centers to employ one full-time monitor for every 25–150 centers it sponsors. The provision of a lower end of this range recognizes that center sponsors administering the Program in larger centers necessarily spend more time per review due to their review of household free and reduced price applications on file. We especially invite comment on this requirement from center sponsors and State agencies, but ask that these comments provide us with a detailed account of the amount of review time typically devoted to CACFP and non-CACFP related topics at a sponsored center.

How Will State Agencies Implement This Requirement for a Specific Sponsoring Organization?

Our decision to specify a range of facilities that each monitor could review means there will be room for some variation in each State agency's application of this requirement. However, to ensure that there is at least broad uniformity among State agencies in implementing this provision, this rule further amends § 226.16(b)(1) to clarify that the monitoring standard is based on ''the equivalent of one full-time staff person'' (i.e. 2080 hours/year, less an average employee's time off for paid holidays and leave) and that the monitoring staff equivalent may include time spent on scheduling, travel, the review itself, follow-up and report-writing for one full-time staff year [2,080 hours]. We also wish to emphasize that this time may be split among more than one person, depending on each person's other duties and the amount of time spent on these duties, as documented in the sponsor's management plan.

In addition, this rule amends § 226.6(f)(2) to require each State agency to develop factors (e.g., rural vs. urban, geographic dispersion of facilities, literacy and language proficiency of providers) that the State agency will consider in determining whether a sponsoring organization has sufficient monitoring staff. State agencies must use these factors and the staffing ranges established by this rule when they review and approve sponsoring organizations' management plans and budgets.

In implementing this requirement, State agencies must carefully review the sponsoring organization's budget and

management plan to ensure that they are analyzing this ratio in terms of full-time monitoring staff equivalents. Because many sponsoring organizations hire geographically-dispersed, part-time monitors, State agencies will need to know the duties and responsibilities of each sponsoring organization employee involved in monitoring in order to ensure that they are truly evaluating the number of full-time staff years committed to the monitoring function.

How Much Time Will Sponsors Have To Implement This Provision?

Participating sponsors will have until July 29, 2003 to submit a new management plan or an amendment to their management plan that complies with the new monitor staffing requirements. However, all management plans submitted by new sponsoring organizations applying for participation after the effective date of this rule must demonstrate a level of staffing devoted to monitoring that falls within the home-to-monitor range specified in this rule at § 226.16(b)(1).

C. State Review Cycle (§ 226.6(m)(4))

What are the Current Regulatory Requirements for the Frequency of State Agency Review of Institutions?

Section 226.6(l) of the current regulations [redesignated § 226.6(m) in this rule] requires State agencies to monitor at least one-third of all institutions in their State each year, and to review each institution at least once every four years (except for sponsors of 200 or more day care homes, which must be reviewed every other year).

How did ARPA Change These Requirements?

ARPA specified that each institution be reviewed no less frequently than once every three years, instead of once every four years as required by the current regulations. This does not require a change to the requirement that the State agency review at least one-third of all institutions in each year, but requires us to revise the frequency of the reviews. Accordingly, this rule amends 226.6(m)(4)(i) of this rule to require State agencies to review each institution (other than certain sponsors) at least once every three years, rather than once every four years. This means that State agencies may not allow more than three fiscal years to elapse between institution reviews. Thus, an institution reviewed in October of 2000 (Fiscal Year 2001), would have to be reviewed again no later than the end of Fiscal Year 2004 (September of 2004). In order to implement this provision of ARPA, this rule also makes a conforming change to the cycle for verifying free and reduced price applications set forth in § 226.23(h).

Were Other Aspects of the Review Requirements Changed as Well?

Yes. Audit and review findings have underscored that, although sponsoring organizations of centers administer CACFP in fewer facilities than large sponsors of day care homes, they should still be reviewed more frequently than independent centers or smaller sponsors (i.e., sponsors of fewer than 100 facilities). In addition, some State agencies and sponsoring organizations have reported a tendency of some less-well-managed day care home sponsoring organizations to keep their total number of sponsored day care homes below 200 to avoid more frequent State agency oversight. In order to ensure adequate State agency oversight, this rule further amends § 226.6(m)(4) by lowering the threshold for biennial review for both types of sponsoring organization (home and center) from 200 to 100 facilities.

What Related Changes Are Made by This Rule, and Why?

In addition, this rule makes one other change designed to fully address the integrity provisions of ARPA and the types of problems documented in management evaluations and the OIG audits. This rule requires at § 226.6(m)(2) that State agencies target for more frequent review those institutions whose prior review included a finding of serious deficiency, as defined in § 226.6(c). This will ensure that State agencies continue to monitor institutions that have been seriously deficient and ensure that successful corrective action has been fully and permanently implemented.

Part III. Other Operational Provisions

A. Definition of Institution (§ 226.2)

How and Why Was the Definition of ''Institution'' Modified by ARPA?

Section 243(a)(1)-(7) of ARPA restructured § 17(a) of the NSLA, which defines an ''institution'' and sets forth the basic requirements for Program participation, such as licensing or approval. The primary purpose of this restructuring was to make these requirements for institution eligibility easier to understand. In addition, the definition of ''institution'' was revised to include sponsors of centers. Until enactment of ARPA, sponsors of child care centers had not been specifically mentioned in § 17(a) of the NSLA. However, center sponsors have long participated in CACFP and are specifically included in the regulatory definition of ''institution'' at § 226.2. Therefore, it is not necessary for us to amend this definition as a result of this change to the statute.

However, this rule does amend the definition of ''institution'' for another reason. Prior to enactment of the William F. Goodling Child Nutrition Reauthorization Act of 1998 (Pub. L. 105–336, October 31, 1998), emergency shelters received meal reimbursements under a separate ''Homeless Child Nutrition Program'' that was directly administered by USDA and was not a part of any specific child nutrition program. No reference to them was made in the regulatory definition of ''institution.'' Public Law 105–336 expanded participation in that program to children through the age of 12, made the program a part of the CACFP, and amended the definition of ''institution'' in § 17(a) of the NSLA to include emergency shelters. Accordingly, this rule adds a new definition of ''emergency shelter'' to § 226.2 and amends the definition of ''institution'' to include emergency shelters serving homeless children.

B. Ceiling on Administrative Reimbursements for Sponsors of Centers (§§ 226.6(f)(3), 226.7(g), 226.16(b)(1))

Why Does the Law Establish a Ceiling on Center Sponsors' Reimbursable Administrative Costs?

OIG audits and State and Federal reviews uncovered a number of situations in which sponsors of centers were using too high a percentage of the meal reimbursement to cover their administrative expenses. When this occurs, less of the meal reimbursement is received by the sponsored center, making it less likely that a high-quality, nutritious meal that meets the Program's meal pattern requirements is being served to participants.

In response to these findings, Congress capped the reimbursable administrative costs of center sponsors at 15 percent of the total meal reimbursements earned by their sponsored centers. Accordingly, this rule amends § 226.16(b)(1) to require that the administrative budget submitted by a sponsoring organization of centers, and the actual administrative costs of such a sponsoring organization, not exceed 15 percent of the meal reimbursements estimated to be earned by its sponsored centers during the budget year, unless the State agency grants a waiver. Thus, if the centers sponsored by a particular sponsoring organization earn $1 million per year in meal reimbursements, the sponsored

centers must receive at least $850,000 for their operating costs (i.e. the cost of their food service), and will receive more than $850,000 if the sponsoring organization's budget is approved for less than $150,000 in reasonable, necessary, and allowable administrative costs.

Does This Mean That a State Agency can Require a Center Sponsor To Retain less Than 15 Percent of its Centers' Reimbursements to Cover its Administrative Expenses?

Yes. The 15 percent figure is a ceiling, not a floor. In other words, a center sponsor may use up to 15 percent of the meal reimbursement for administrative costs only if its budget, as approved by the State agency, includes this amount of allowable, reasonable, and necessary administrative expenses.

Could a State Agency Choose to set a Statewide Limit of less Than 15 Percent for all Center Sponsors?

No. State agencies are not permitted to set Statewide ceilings below 15 percent for all sponsoring organizations of centers. Each sponsoring organization's budget must be evaluated individually to determine the appropriate level of administrative funding.

What Constitutes an ''Administrative Cost''?

Section 226.2 of the current regulations defines both ''administrative costs'' and ''operating costs.'' Administrative costs are those incurred by an institution related to planning, organizing, and managing a food service under the program. For sponsors of centers, the primary administrative costs would be claim preparation, free and reduced price eligibility determinations, and monitoring and training of the sponsored facilities. Operating costs are those expenses incurred by an institution in serving meals to participants. In the case of sponsors of centers, this funding would ''pass through'' to their sponsored centers to cover the cost of food service.

Does the 15 Percent cap Apply To Administrative Costs Incurred By Sponsored Centers?

Yes. The 15 percent cap applies to all administrative costs, whether incurred by the sponsoring organization or the sponsored centers. It is our expectation that, if a center chooses to be sponsored in CACFP, it makes that choice due to an unwillingness or inability to perform the administrative tasks required under Program regulations (claims preparation, free and reduced price eligibility determinations, recordkeeping). Therefore, there should be few, if any, administrative expenses incurred by the sponsored center, and they should not detract from the 85 percent of meal reimbursement reserved for the food service under the 15 percent ceiling. If any of the primary administrative functions were being performed by the sponsored center, it would remove the need for the sponsor and would provide the sponsoring organization of centers with a means of evading the cap by shifting administrative costs to their sponsored centers.

Couldn't the 15 Percent Limit Be Evaded if a Sponsored Center Became an Independent Center, but Then Contracted With its Former Sponsoring Organization To Perform Administrative Services, and Paid the Former Sponsor More Than 15 Percent of the Meal Reimbursement To Perform These Administrative Duties?

No. Although contracting out is generally permissible, the current regulations at § 226.15(c) prohibit institutions from contracting out for management of the Program. If the former sponsor were hired to perform all of its previous duties related to application processing, claims submission, and recordkeeping, the now-independent center would be in violation of this regulatory prohibition.

Could a State Agency Approve a Center Sponsor's Budget for Administrative Expenses in Excess of 15 Percent?

Yes. The law permits a State agency to waive the 15 percent ceiling if the center sponsor ''provides justification to the State that the organization requires funds in excess of 15 percent . . . to pay the administrative expenses of the organization.''

What Types of Circumstances Would Justify a Waiver?

ARPA permits a State agency to waive the 15 percent ceiling in recognition of the higher costs faced by certain center sponsors. For example, if a sponsor runs the Program in 50 centers scattered across ten rural counties spanning several hundred miles, its travel costs for monitoring would necessarily be much higher than those incurred by a sponsor administering the Program in 50 centers located in a single urban area. Similarly, a sponsor with non-English-speaking staff at sponsored centers might face higher administrative costs resulting from language barriers and the cost of translations.

Finally, consider the case of two sponsors, each of which administers the Program in 50 centers with an average daily attendance of 2,000 for 22 serving days of lunch and breakfast. If 80 percent of the children in Sponsor A's centers were eligible for paid meals and 20 percent were eligible for free meals, Sponsor A's total meal reimbursement for the month would be $42,944 (based on rates in effect as of May, 2002). In contrast, if 80 percent of the children in Sponsor B's centers were eligible for free meals and 20 percent were eligible for paid meals, Sponsor B's total meal reimbursement for the month would be $117,656. Because the free meal reimbursement is so much higher than the paid reimbursement, the total meal reimbursement on which the maximum allowable administrative costs are calculated is far smaller for Sponsor A than Sponsor B. Therefore, Sponsor A would probably be justified in retaining a higher percentage of its sponsored centers meal reimbursements than would Sponsor B. The law provides State agencies with the ability to take these types of factors into account when considering a center sponsor's request for a waiver of the 15 percent ceiling. State agencies are also encouraged to contact their FNSROs when analyzing requests for such waivers.

How will FNS Determine Whether State Agencies are Properly Using Their Waiver Authority?

We will include in management evaluations a review of the State agency's center sponsor administrative budget review and approval process. In addition, this rule amends § 226.6(f)(3) to require State agencies to submit copies of center sponsor waiver approvals and denials to their FNSRO.

Are the Rules Different if the Sponsored Centers are ''Affiliated'' With Their Sponsoring Organization (i.e., Centers That are Owned by, or are Part of the Same Legal Entity as, the Sponsor)?

No. Congress makes no distinction among types of center sponsors. This means that a sponsoring organization of affiliated centers must ensure that at least 85 percent of the meal reimbursement is devoted to operating costs.

Won't a Sponsor Selling Meals to its Centers—Whether Affiliated or Unaffiliated—Retain Over 15 Percent of the Total Reimbursement?

Most likely, yes, because it will retain up to 15 percent of the meal reimbursement for its administrative costs, and will retain additional funds to cover the cost of preparing and delivering meals to its sponsored centers. However, this still fulfills the

law's intent that no more than 15 percent of the total reimbursement be used to pay administrative costs.

Would the Rules be Different for Proprietary Center Sponsors Because of Their Profit-Making Nature?

No. The law still requires that at least 85 percent of the reimbursement be used for operating costs (i.e. the cost of the meal service). In addition, all institutions must maintain a nonprofit food service.

What if, Despite Having an Approved Budget for less Than 15 Percent of Total Reimbursements, a Sponsor of Centers Expends More Than 15 Percent of Total Reimbursements for Administrative Costs During the Course of a Year?

The law limits the actual reimbursable administrative expenses of a sponsoring organization of centers to a maximum of 15 percent of the meal reimbursement. Thus, sponsoring organizations of centers and their State agencies must monitor the 15 percent limit throughout the year to ensure that unexpected variations in participation do not result in administrative expenditures over the 15 percent threshold. If, when a State agency reviews a sponsoring organization's end-of year expenditures, it discovers that the 15 percent ceiling has been exceeded, the State agency must take appropriate fiscal action.

C. State Agency Limits on Transfers by Day Care Homes (§§ 226.6(p) and 226.18(b)(13))

ARPA also addressed the issue of State agency-level controls on participation by day care homes. Section 243(f) of ARPA amended § 17(f)(3)(ii)(D) of the NSLA to require State agencies to limit day care home transfers from one sponsoring organization to another to no more than one time per year, except under extenuating circumstances such as the termination or withdrawal from the Program of a day care home's sponsoring organization. This rule amends redesignated § 226.6(p) (formerly § 226.6(o)) to require the State agency to establish a transfer policy consistent with the ARPA provision. In addition, this rule further amends redesignated § 226.6(p) and adds a new 226.18(b)(13) to require the sponsoring organization-day care home agreement to specify the State agency's transfer policy.

D. Notice to Parents or Guardians of Enrolled Participants (§ 226.16(b)(5))

What Information Does ARPA Require That Parents or Guardians of Participants Enrolled in CACFP Receive?

Section 243(b)(4) of the ARPA further amended § 17(d) of the NSLA by adding a new § 17(d)(3) to require that a sponsored center, a day care home, or the home or center's sponsoring organization provide basic Program information to parents or guardians of enrolled participants. For children and adults participating in CACFP at the time of ARPA's enactment (June 20, 2000), this information was to be provided within 90 days of enactment. For participants enrolled after enactment, the law requires that the information be provided to parents or guardians at the time of enrollment.

This rule amends §§ 226.16(b)(5), 226.17(d), and 226.18(b)(16) to require that any sponsor, either itself or through its sponsored facilities, must ensure that the required information is distributed to the parents or guardians of enrolled participants in accordance with the law. (For the sake of consistency and simplicity, we made clear that this requirement applies to all Program participants, not just to participating children.)

How can the Sponsor or Facility Obtain This Information Quickly in Order To Meet This Requirement?

We have developed and distributed to State agencies a brochure that provides basic information about the CACFP and its benefits. The names and telephone numbers of the sponsor and the State agency must be added to the brochure to meet the requirements of the law. We have also developed and distributed a one-page flyer that includes this basic Program information, and that will be less costly to reproduce than the brochure. Because the flyer was distributed electronically, it can easily be amended to include the name and telephone number of the appropriate State agency and the sponsor.

Some Urban Sponsors Deal With Providers and Households Speaking a Large Number of Languages. How can These Sponsors Meet the law's Requirement To Provide the Information in a Language Easily Understandable to the Household?

We have made the informational brochure available in English and Spanish and the flyer available in English, Spanish, and 18 other languages. We urge State agencies and sponsors to work together to obtain translations into any other language which is commonly spoken in the households of enrolled children.

E. Procedures for Recovery of Funds Disbursed to Institutions (§ 226.14(a))

Section 243(d) of ARPA amended § 17(f)(1) of the NSLA to establish certain requirements pertaining to the recovery of funds that have been disbursed to institutions. The law provided that such recovery ''shall not be paid from funds used to provide meals and supplements,'' may be repaid over a period of one or more years, and must include an opportunity for an administrative review for the institution prior to the recovery of funds.

Are Child Care Facilities Covered by This Provision?

No. The law refers only to disbursements to institutions by the State agency. Thus, if either a sponsor or a State agency uncovers invalid claims in its conduct of a facility review, or a sponsor makes such a discovery in editing the facility's claim, the facility's claim may be adjusted without offering an administrative review.

How do These Requirements Differ From Current Requirements in the CACFP Regulations?

The prohibition on repaying claims out of Program funds of any kind (meal or administrative funds) already exists, as does the institution's opportunity for an administrative review of any action that affects its reimbursement (§§ 226.14(a) and 226.6(k)). The provision pertaining to repayment schedules is new, although some State agencies already permit repayment schedules when collecting overclaims from institutions.

Are Repayment Schedules of at Least a Year Now Required?

No. The law says that recovered amounts ''may'' be paid to the State agency over a period of one or more years. It leaves to the State agency the discretion of whether and how to use a repayment schedule. It should also be noted that, although the law provides State agencies with this option, FNS may still insist on immediate repayment in full from a State agency, regardless of whether the State agency has chosen to provide an institution with a repayment schedule.

Does This Rule Include Other Requirements Pertaining to the Recovery of Disbursed Funds?

Yes. This rule makes clear our current position that State agencies must assess

interest during the period of repayment, including the period of administrative review, unless the administrative review officer overturns the State agency's action. In addition, State agencies must maintain lists of all funds recovery actions (excluding routine claim adjustments). In the interest of preserving flexibility for State agencies, the list may be kept in paper form, electronic form, or in retrievable, individual case files within the State agency.

Accordingly, this rule amends § 226.14(a) to specifically refer to the State agency's option to collect overpayments over a period of one or more years and to require State agencies to maintain lists or retrievable records of all funds recovery activities. This rule adds provisions in §§ 226.6(k)(10) and 226.14(a) to clarify our position on the collection of interest on overpayments.

F. Disqualification and Administrative Reviews for Day Care Homes (§§ 226.16(l) and 226.6(l))

As previously mentioned in Part I(D) of this preamble, § 243(c) of ARPA added a new § 17(d)(5) to the NSLA that requires us to establish procedures for the termination of participation of day care homes (in addition to institutions). These procedures must provide day care homes with an administrative review ''prior to any determination to terminate'' a day care home's participation. However, this requirement to offer an administrative review is limited to proposed termination actions. The requirement does not extend to any other action taken by a sponsor, including a sponsor's collection of overpayments from a day care home (see discussion in Part III(E) above). On April 12, 2001, we issued guidance on the effects of ARPA on the termination of the agreements of day care homes. This preamble contains a general discussion of the issues related to the termination of day care home agreements, but does not repeat the detailed discussions contained in that memorandum (which is available at www.fns.usda.gov/cnd).

Why Do the Parts of the Rule Relating to Actions To Terminate a Day Care Home's Agreement Use the Term Termination ''for Cause''?

Program regulations at § 226.18(b)(8) have long permitted sponsors and day care homes to terminate the sponsor-home agreement ''for convenience.'' Termination for convenience occurs when the sponsor or day care home terminates the agreement for considerations unrelated to either party's performance of Program responsibilities under the agreement. These are not the types of actions that ARPA intended to address.

ARPA's focus is on situations in which a sponsoring organization acts to terminate a day care home's agreement because the day care home has violated the agreement and therefore did not operate in accordance with Program requirements. If the sponsoring organization's proposed termination of a day care home's agreement is upheld in an administrative review, or if the day care home fails to request an administrative review, the day care home will be disqualified. This type of termination is commonly called termination ''for cause.'' In order to distinguish between these two types of action in the context of day care homes and their sponsors, this rule amends § 226.2 to add definitions of ''termination for convenience'' and ''termination for cause.''

What Process Must a Sponsor Use in Terminating a Day Care Home's Agreement for Cause?

This rule adds a new § 226.16(l), which requires a sponsoring organization to initiate action to terminate the agreement of a day care home for cause if the sponsoring organization determines the day care home has committed one or more serious deficiency. Section 226.16(l)(2) lists the serious deficiencies for day care homes and § 226.16(l)(3) sets out the requirements for the termination process. This process is quite similar, though not identical, to that used by State agencies in dealing with seriously deficient institutions, as revised by this rule (see Part I(D) of this preamble).

Do the Law's Provisions Regarding ''Suspension'' of Program Payments Based on Submission of False Claims Apply to Providers as Well as Institutions?

No. The law requires suspension of Program payments (without the opportunity for corrective action) if the provider has engaged in conduct that poses an imminent threat to children's health or safety or to public health or safety. There is no other provision authorized by law for suspension of provider payments. This rule addresses the suspension of provider funds due to health or safety violations in § 226.16(l)(4).

How Should the Law's Provisions Be Implemented With Regard to the ''Suspension'' of Program Payments to Providers Based on an Imminent Threat to Health or Safety?

Several aspects of the process for suspending providers who engage in conduct that poses an imminent threat to health or safety merit discussion.

First, § 17(d)(5)(C) states the Department may establish procedures requiring immediate suspension for institutions and day care homes ''without the opportunity for corrective action, if the State agency determines that there is an imminent threat to the health or safety of a participant at the entity or the entity engages in any activity that poses a threat to public health or safety.'' This language was repeated in implementation guidance we issued on July 20, 2000, and October 17, 2000. However, recognizing that the State agency would not have an agreement with a day care home, we clarified this statement in guidance issued on April 12, 2001, and in the language of this rule at § 226.16(l)(4). Sponsoring organizations, not State agencies, will bear the responsibility for making these decisions for the day care homes they sponsor.

Second, to parallel the provisions promulgated for the State agency's suspension of an institution based on an imminent threat to health or safety, this rule requires that, if State or local health or licensing officials have cited a day care home for serious health or safety violations, the sponsoring organization must immediately suspend the home's CACFP participation prior to any formal action to revoke the home's licensure or approval. However, if a sponsoring organization finds unhealthy or unsafe conditions that pose an imminent threat to health or safety when conducting a home review, and the licensing agency cannot make an immediate onsite visit, there may be a delay before the sponsor can act. In these cases, this rule requires the sponsoring organization to immediately notify the appropriate State or local licensing and health authorities and to take action that is consistent with the recommendations and requirements of those authorities.

Who Must Hold the Administrative Review?

This rule requires in § 226.6(l)(1) that State agencies ensure that day care homes are provided an opportunity for an administrative review of a proposed termination. State agencies may do this either by offering State-level administrative review or by requiring the sponsoring organization to offer an

administrative review. If a State agency elects to provide a State-level administrative review to one day care home, it must do so for all day care homes in the State.

What Options Does a Sponsoring Organization Have in Offering Administrative Reviews?

If a State agency chooses to require sponsoring organizations to provide the administrative reviews, it is the sponsoring organization's responsibility to ensure that the administrative review is provided in accordance with the requirements for day care home administrative reviews added by this rule in § 226.6(l). A sponsoring organization may do this by holding the administrative review itself, or by contracting with someone to provide the administrative review (such as a sponsor's association).

Are the Procedural Requirements the Same for an Administrative Review Conducted by a State Agency and One Conducted by a Sponsoring Organization?

Yes. The minimum procedural requirements for day care home administrative reviews are the same regardless of whether it is the State agency or the sponsor conducting the review. The procedures are a streamlined version of the procedures State agencies must follow for administrative reviews for institutions.

What Will Happen if a Sponsor Uses Termination for Convenience When They Should Use Termination for Cause?

Because the law clearly intends that poorly-performing and fraudulent providers be placed on a list which would disqualify them from Program participation, we believe it is necessary to underscore the importance of sponsoring organizations making meaningful distinctions between the bases for termination. To that end, this rule requires State agencies to include as part of their review of a sponsor's operation their proper implementation of this provision (see revised and redesignated § 226.6(m)(3)(iii)). The rule also requires State agencies to determine that a sponsoring organization is seriously deficient when it has terminated providers for convenience when a termination for cause was the appropriate course of action (see § 226.6(c)(3)(ii)(R), as added by this rule).

May Providers Still Terminate Their Agreements With a Sponsor ''for Convenience'?

Yes. Providers may still terminate their agreement with a sponsor ''for convenience.'' However, depending on the timing of this action and the nature of the State agency's implementation of ARPA's requirement for an annual transfer policy, the provider's termination for convenience could result in a lapse in their Program participation. Providers having questions on this subject should refer to the State agency for further guidance.

How Will State Agencies Be Able To Monitor Sponsors' Compliance With These New Termination and Appeal Procedures?

This rule establishes the minimum requirements for sponsoring organizations to use when determining a day care home seriously deficient, proposing to terminate a day care home's agreement for cause, and offering day care homes administrative reviews of such actions (§ 226.6(l)). This rule amends § 226.16(b)(6) to require sponsoring organizations to submit, as part of their Program applications, any supplemental procedures the sponsoring organization has established for taking these actions and for providing administrative reviews (if the sponsor has been charged with conducting the administrative reviews). In addition, this rule amends redesignated § 226.6(m)(3)(iii) to require State agency reviews of sponsoring organizations to evaluate implementation of procedures relating to serious deficiency, termination, and administrative review.

Executive Order 12866

This interim rule has been determined to be significant and was reviewed by the Office of Management and Budget under Executive Order 12866.

Regulatory Flexibility Act

This rule has been reviewed with regard to the requirements of the Regulatory Flexibility Act (5 U.S.C. 601–612). Eric M. Bost, Under Secretary for Food, Nutrition, and Consumer Services, has certified that this rule will not have a significant economic impact on a substantial number of small entities.

The CACFP is administered by State agencies and by over 19,000 institutions (sponsoring organizations and independent child and adult care centers) in over 210,000 child and adult care facilities (child care centers, outside-school-hours care centers, adult day care centers, and family day care homes). The vast majority of institutions and facilities participating in CACFP are ''small entities''. However, the changes mandated by Public Laws 106–224 and 106–472 and implemented in this interim rule will not have a significant economic impact, except where improved monitoring procedures lead State agencies to terminate institutions' agreements or sponsoring organizations terminate the agreements of day care homes. In short, there will be little or no impact on those entities administering the Program in accordance with the CACFP regulations, since the changes to the law were largely intended to improve compliance with existing regulations.

This rule will primarily affect the procedures used by State agencies in reviewing applications submitted by institutions that are participating or that wish to participate in the Child and Adult Care Food Program; in monitoring the performance of participating institutions; and in ensuring that appropriate and timely action is taken to correct serious deficiencies noted in an institution's operation of the Program. The rule will also impact sponsoring organizations, by requiring that they conduct unannounced reviews of their sponsored facilities, and some sponsoring organizations of centers, whose level of reimbursable Program administrative expenses will be capped at 15 percent of total meal reimbursements. Institutions, individuals, and day care home providers will be affected by the provision of an administrative review prior to their loss of Program benefits or the termination of their Program agreements. Those changes will not, in the aggregate, have a significant economic impact.

Regulatory Impact Analysis

This rule implements a number of changes to existing Program regulations. These changes are mandated by the NSLA, as amended by Public Laws 106–224 and 106–472, and are designed to improve management and financial integrity in the CACFP. These changes will affect all entities involved in CACFP, including USDA, State agencies, institutions, facilities, and participating children and their households. The entities most affected will be State agencies, institutions, and facilities.

Despite the conduct of numerous OIG audits and State and FNS reviews, there is no statistically representative information available on CACFP integrity. OIG reports have focused on purposively selected CACFP institutions and facilities, and ''management

evaluations'' conducted by State agencies and FNS are not designed to capture representative information for the purpose of developing Nationally-valid estimates of fraud or mismanagement. While the OIG reports clearly illustrate that there are significant weaknesses in parts of the Program regulations, and that there have been significant weaknesses in oversight by some State agencies and institutions, neither the OIG reports nor any other data sources estimate the prevalence or magnitude of CACFP fraud and abuse.

This lack of information makes it difficult for USDA to estimate the amount of CACFP reimbursement lost due to fraud and abuse. For that reason, when the fiscal impact of these provisions was estimated by FNS, the Congressional Budget Office, and the Office of Management and Budget when Public Law 106–224 was enacted, only a few of the provisions were estimated to produce Program savings. Those estimates appear in the Regulatory Impact Analysis in Table ES–2, which is summarized below:

TABLE ES–2.—ESTIMATED SAVINGS OF RULE ($ IN MILLIONS)

Provision	2001	2002	2003	2004	2005	2001–2005	2006–2010	2001–2010
Tax-exempt, Prior ineligi-bility in other public programs, eliminate participation ''entitlement'' for instituitions	−3.2	−3.4	−3.7	−4.0	−4.2	−18.5	−25.8	−44.3
New sponsors must demonstrate need for services	−0.0	−0.5	−1.0	−1.4	−1.4	−4.3	−7.1	−11.4
15% cap on center sponsor administrative earnings	−13.8	−17.3	−21.6	−26.4	−31.9	−110.9	−279.1	−390.0
Limit facility transfers between sponsors	−0.0	−0.9	−1.0	−1.0	−1.1	−4.0	−6.5	−10.5

FNS had very little flexibility in implementing most of the provisions mandated by ARPA and the Grain Standards Act. As discussed throughout the preamble, above, and under ''Executive Order 13132'', below, where possible, we have made every attempt to ensure that the statutory provisions, as implemented in this interim rule, safeguard Program funds without unnecessarily limiting access to the Program by institutions, facilities, or children.

Executive Order 12372

This Program is listed in the Catalog of Federal Domestic Assistance under No. 10.558 and is subject to the provisions of Executive Order 12372, which requires intergovernmental consultation with State and local officials (7 CFR Part 3015, Subpart V, and final rule related notice published in 48 FR 29114, June 24, 1983, and 49 FR 22676, May 31, 1984).

Executive Order 13132

Executive Order 13132 requires Federal agencies to consider the impact of their regulatory actions on State and local governments. Where such actions have ''federalism implications,'' agencies are directed to provide a statement for inclusion in the preamble to the regulation describing the agency's considerations in terms of the three categories enumerated in section 6(a)(B) of Executive Order 13132:

Prior Consultation With State Officials

Prior to drafting this interim rule, we received input from State and local agencies at various times. Since the CACFP is a State administered, Federally funded program, our regional offices regularly have formal and informal discussions with State and local officials regarding Program implementation and performance. This allows State and local agencies to contribute input that helps to influence our discretionary rulemaking proposals, the implementation of statutory provisions, and even our own Departmental legislative proposals. In addition, over the past seven years, our headquarters staff informally consulted with State administering agencies, Program sponsors, and CACFP advocates on ways to improve Program management and integrity in CACFP. Discussions with State agencies took place in the joint Management Improvement Task Force meetings held between 1995 and 2000; in three biennial National meetings of State and Federal CACFP administrators (1996 in Seattle, 1998 in New Orleans, and 2000 in Chicago); at the December 1999 meeting of State Child Nutrition Program administrators in New Orleans; and in a variety of other small- and large-group meetings. Discussions with Program advocates and sponsors occurred in the Management Improvement Task Force meetings held in 1999–2000; in annual National meetings of the Sponsors Association, the CACFP Sponsors Forum, and the Western Regional Office-California Sponsors Roundtable from 1996–2000; and in a variety of other small- and large-group meetings.

Nature of Concerns and Need To Issue This Rule

The issuance of a regulation is required as a result of statutory changes enacted in Public Laws 106–224 and 106–472. Many of the individual provisions in these statutes were discussed in the meetings with State and local cooperators mentioned above, and the Department, State agencies, and local sponsoring organizations all provided input to the congressional authorizing committees that drafted these statutory changes. Although State agencies and local sponsoring organizations have some concerns about the implementation of the new termination and appeal procedures mandated by these laws, Congress attempted to balance the demonstrable need to improve Program compliance in CACFP with the protection of institutions and day care homes' ability to receive due process prior to having their Program participation terminated.

Extent to Which We Meet Those Concerns

FNS has considered the impact of these statutory changes on State and local administering agencies, and has followed congressional intent in attempting to balance Program integrity concerns with the need to maintain Program access for capable institutions and family day care homes. The preamble above contains a more detailed discussion of our attempt to balance integrity and access concerns, while implementing these provisions in a manner consistent with both the letter and the intent of the law.

Public Law 104–4

Title II of the Unfunded Mandates Reform Act of 1995 (UMRA), Pub. L. 104–4, requires Federal agencies to assess the effects of their regulatory actions on State, local, and tribal governments and the private sector. Under Section 202 of the UMRA, the Food and Nutrition Service must usually prepare a written statement, including a cost-benefit analysis, for proposed and final rules with ''Federal mandates'' that may result in new annual expenditures of $100 million or more by State, local, or tribal governments or the private sector. When such a statement is needed, section 205 of the UMRA requires the Food and Nutrition Service to identify and consider regulatory alternatives that would achieve the same result.

This rule contains no Federal mandates (as defined in Title II of the UMRA) that would lead to new annual expenditures exceeding $100 million for State, local, or tribal governments or the private sector. Therefore, the rule is not subject to the requirements of sections 202 and 205 of the UMRA.

Public Participation

As noted in the **SUPPLEMENTARY INFORMATION** section of this preamble, we are publishing this interim rule without the prior notice or public comment generally required under section 553 of the Administrative Procedure Act (APA). Section 263(a) of ARPA specified that the Secretary must publish rules implementing ARPA's amendments to the CACFP provisions of the NSLA as soon as practicable, and without regard to the APA, Departmental policy regarding public participation, or the Paperwork Reduction Act. We are therefore required to publish a rule incorporating the ARPA changes without following the usual rulemaking procedures.

We are also publishing in this interim rule provisions implementing section 307 of the Grain Standards Act. Section 307 incorporated amendments to the hearing requirements established by section 243 of ARPA. It would be impractical to implement the provisions of ARPA without the inclusion of the modifications to the appeal process instituted in accordance with section 307 of the Grain Standards Act. For these reasons, we have determined in accordance with 5 U.S.C. 553(b)(3) that good cause exists for the promulgation of the provisions of this rule implementing section 307 of the Grain standards Act without prior notice and public comment. In order to improve administration of the rule, however, we are seeking public comment on all of its provisions and will make any appropriate changes based on the comments when the final rule is published.

Executive Order 12988

This rule has been reviewed under Executive Order 12988, Civil Justice Reform. This rule is intended to have preemptive effect with respect to any State or local laws, regulations, or policies which conflict with its provisions or which would otherwise impede its full implementation. This rule is not intended to have retroactive effect unless so specified in the **DATES** section of the preamble of the final rule. All available administrative procedures must be exhausted prior to any judicial challenge to the provisions of this rule or the application of its provisions. This includes any administrative procedures provided by State or local governments. In the CACFP, the administrative procedures are set forth at: (1) 7 CFR §§ 226.6(k), 226.6(l), and 226.16(l) which establish administrative review procedures for institutions, individuals, and day care homes; and (2) 7 CFR Section 226.22 and 7 CFR 3015, which address administrative review procedures for disputes involving procurement by State agencies and institutions.

Paperwork Reduction Act

In accordance with § 3507(j) of the Paperwork Reduction Act of 1995 (44 U.S.C. 3501 *et seq.*), the information collection and recordkeeping requirements included in this interim rule have been submitted for emergency approval to the Office of Management and Budget (OMB). OMB has assigned control number 0584–0055 to the information collection and recordkeeping requirements. FNS intends to request continuation of that approval for three years and invites the general public and other public agencies to comment on the information collection impact of implementing this interim rule.

Written comments on the information collection requirements must be received on or before August 26, 2002 by the Office of Information and Regulatory Affairs, Office of Management and Budget (OMB), 3208 New Executive Office Building, Washington, DC 20503, Attention: Ms. Lauren Whittenberg, Desk Officer for the Food and Nutrition Service. A copy of these comments may also be sent to Mr. Robert Eadie at the address listed in the **ADDRESSES** section of this preamble. Commenters are asked to separate their remarks on information collection requirements from their comments on the remainder of the interim rule.

OMB is required to make a decision concerning the collection of information required by this rule between 30 to 60 days after its publication in the **Federal Register**. Therefore, a comment to OMB is most likely to be considered if OMB receives it within 30 days of the publication of this rule. This does not affect the 60-day deadline for the public to comment to the Department on the substance of the rule.

Comments are invited on: (a) Whether the collection of information is necessary for the Agency to perform its functions of the agency and will have practical utility; (b) the accuracy of the Agency's estimate of the burden of collecting the information, including whether its methodology and assumptions are valid; (c) ways to enhance the quality, utility, and clarity of the information to be collected; and (d) ways to minimize the burden of the information collection, including the use of appropriate automated, electronic, mechanical, or other technological collection techniques or other forms of information technology. The title and description of the information collections are shown below with an estimate of the annual reporting and recordkeeping burdens. Included in the estimate is the time for reviewing instructions, searching existing data sources, gathering and maintaining the data needed, and completing and reviewing the collection of information.

Title: 7 CFR Part 226, Child and Adult Care Food Program.

OMB Number: 0584–0055.

Type of request: Revision of existing collections.

Abstract: This rule revises: State agency criteria for approving and renewing institution applications and for terminating agreements with institutions; State- and institution-level monitoring requirements; State agency and sponsoring organization follow-up to ensure that appropriate and timely action is taken to correct serious deficiencies noted in an institution or day care home's operation of the Program; the level of reimbursable Program administrative expenses for sponsoring organizations of centers; and the administrative review procedures for institutions, individuals, and day care homes. The provisions of law that are implemented in this interim rule and are likely to have the greatest potential impact will require: State agencies to evaluate all Program applications in light of three ''performance standards'; time limits on the completion of corrective action by

institutions and day care homes that have been declared seriously deficient; payments to continue to seriously deficient institutions and homes until the conclusion of the appeal process, unless payments to the institution or home have been suspended for reasons related to health or safety concerns or the submission of a false or fraudulent claim; responsible principals and responsible individuals, as well as family day care homes whose agreements have been terminated for cause, to be placed on the National disqualified list; all State agencies to follow uniform procedures for administrative reviews (appeals); the establishment of an appeals process for family day care homes; sponsoring organizations annually to conduct a minimum of two unannounced visits to each of their sponsored facilities; State agencies to perform 15 percent of their required facility reviews unannounced; sponsoring organizations to meet minimum staffing requirements for performance of the monitoring function; and sponsors of centers to retain a maximum of 15 percent of Program funds for administrative expenses, unless a waiver is obtained from the State agency. These changes are primarily designed to improve Program operations and monitoring at the State and institution levels.

Estimated Total Annual Burden on Respondents:

Total Existing Burden Hours: 5,076,428.

Total Proposed Burden Hours: 5,093,852.

Total Difference: 17,424.

The changes in these information collection requirements will not be in effect until approved by OMB.

List of Subjects in 7 CFR Part 226

Accounting, Aged, Day care, Food and Nutrition Service, Food assistance programs, Grant programs, Grant programs—health, Indians, Individuals with disabilities, Infants and children, Intergovernmental relations, Loan programs, Reporting and recordkeeping requirements, Surplus agricultural commodities.

Accordingly, 7 CFR Part 226 is amended as follows:

PART 226—CHILD AND ADULT CARE FOOD PROGRAM

1. The authority citation for Part 226 is revised to read as follows:

Authority: Secs. 9, 11, 14, 16, and 17, Richard B. Russell National School Lunch Act, as amended (42 U.S.C. 1758, 1759a, 1762a, 1765 and 1766).

2. In § 226.2:

a. New definitions of *Administrative review, Administrative review official, Center, Days, Disqualified, Emergency shelter, Facility, Internal controls, National disqualified list, New institution, Notice, Principal, Renewing institution, Responsible principal or responsible individual, Seriously deficient, State agency list, Suspended, Suspension review, Suspension review official, Termination for cause, Termination for convenience, and Unannounced review* are added in alphabetical order; and

b. The definition of *Institution* is amended by adding the words ''emergency shelter'' after the words ''outside-school-hours care center''.

The additions read as follows:

§ 226.2 Definitions.

* * * * *

Administrative review means the fair hearing provided upon request to:

(a) An institution that has been given notice by the State agency of any action or proposed action that will affect their participation or reimbursement under the Program, in accordance with § 226.6(k);

(b) A principal or individual responsible for an institution's serious deficiency after the responsible principal or responsible individual has been given a notice of intent to disqualify them from the Program; and

(c) A day care home that has been given a notice of proposed termination for cause.

Administrative review official means the independent and impartial official who conducts the administrative review held in accordance with § 226.6(k).

* * * * *

Center means a child care center, an adult day care center, or an outside-school-hours care center.

* * * * *

Days means calendar days unless otherwise specified.

* * * * *

Disqualified means the status of an institution, a responsible principal or responsible individual, or a day care home that is ineligible for participation.

* * * * *

Emergency shelter means a public or private nonprofit organization whose primary purpose is to provide temporary shelter and food services to homeless families with children.

* * * * *

Facility means a sponsored center or a family day care home.

* * * * *

Internal controls means the policies, procedures, and organizational structure of an institution designed to reasonably assure that:

(a) The Program achieves its intended result;

(b) Program resources are used in a manner that protects against fraud, abuse, and mismanagement and in accordance with law, regulations, and guidance; and

(c) Timely and reliable Program information is obtained, maintained, reported, and used for decision-making.

* * * * *

National disqualified list means the list, maintained by the Department, of institutions, responsible principals and responsible individuals, and day care homes disqualified from participation in the Program.

New institution means an institution applying to participate in the Program for the first time, or an institution applying to participate in the Program after a lapse in participation.

* * * * *

Notice means a letter sent by certified mail, return receipt (or the equivalent private delivery service), by facsimile, or by email, that describes an action proposed or taken by a State agency or FNS with regard to an institution's Program reimbursement or participation. Notice also means a letter sent by certified mail, return receipt (or the equivalent private delivery service), by facsimile, or by email, that describes an action proposed or taken by a sponsoring organization with regard to a day care home's participation. The notice must specify the action being proposed or taken and the basis for the action, and is considered to be received by the institution or day care home when it is delivered, sent by facsimile, or sent by email. If the notice is undeliverable, it is considered to be received by the institution, responsible principal or responsible individual, or day care home five days after being sent to the addressee's last known mailing address, facsimile number, or email address.

* * * * *

Principal means any individual who holds a management position within, or is an officer of, an institution or a sponsored center, including all members of the institution's board of directors or the sponsored center's board of directors.

* * * * *

Renewing institution means an institution that is participating in the Program at the time it submits a renewal application.

Responsible principal or responsible individual means:

(a) A principal, whether compensated or uncompensated, who the State agency or FNS determines to be responsible for an institution's serious deficiency;

(b) Any other individual employed by, or under contract with, an institution or sponsored center, who the State agency or FNS determines to be responsible for an institution's serious deficiency; or

(c) An uncompensated individual who the State agency or FNS determines to be responsible for an institution's serious deficiency.

* * * * *

Seriously deficient means the status of an institution or a day care home that has been determined to be non-compliant in one or more aspects of its operation of the Program.

* * * * *

State agency list means an actual paper or electronic list, or the retrievable paper records, maintained by the State agency, that includes a synopsis of information concerning seriously deficient institutions and providers terminated for cause in that State. The list must be made available to FNS upon request, and must include the following information:

(a) Institutions determined to be seriously deficient by the State agency, including the names and mailing addresses of the institutions, the basis for each serious deficiency determination, and the status of the institutions as they move through the possible subsequent stages of corrective action, proposed termination, suspension, agreement termination, and/or disqualification, as applicable;

(b) Responsible principals and responsible individuals who have been disqualified from participation by the State agency, including their names, mailing addresses, and dates of birth; and

(c) Day care home providers whose agreements have been terminated for cause by a sponsoring organization in the State, including their names, mailing addresses, and dates of birth.

* * * * *

Suspended means the status of an institution or day care home that is temporarily ineligible for participation (including Program payments).

Suspension review means the review provided, upon the institution's request, to an institution that has been given a notice of intent to suspend participation (including Program payments), based on a determination that the institution has knowingly submitted a false or fraudulent claim.

Suspension review official means the independent and impartial official who conducts the suspension review.

Termination for cause means the termination of a day care home's Program agreement by the sponsoring organization due to the day care home's violation of the agreement.

Termination for convenience means termination of a day care home's Program agreement by either the sponsoring organization or the day care home, due to considerations unrelated to either party's performance of Program responsibilities under the agreement.

* * * * *

Unannounced review means an on-site review for which no prior notification is given to the facility or institution.

* * * * *

3. In § 226.6:

a. Paragraphs (b) and (c) are revised;

b. Paragraph (d)(3) is amended in the last sentence by removing the reference ''226.6(n)'' and adding in its place the reference ''226.6(o)';

c. Paragraph (f)(1) is amended by adding a new sentence at the end of the paragraph;

d. Paragraph (f)(2) is amended by removing the third sentence and adding in its place four new sentences;

e. Paragraph (f)(3) is amended by adding three new sentences at the end of the paragraph;

f. Paragraph (k) is revised;

g. Paragraphs (l)–(p) are redesignated as paragraphs (m)-(q) and a new paragraph (l) is added;

h. Newly redesignated paragraph (m) is revised;

i. Newly redesignated paragraph (p) is amended by adding two new sentences after the first sentence; and

j. Newly redesignated paragraph (q) is amended by removing the reference ''226.6(l)'' and adding in its place the reference ''226.6(m)''.

The additions and revisions specified above read as follows:

226.6 State agency administrative responsibilities.

* * * * *

(b) *Application Approval.* Each State agency must establish an application procedure to determine the eligibility under this part of applicant institutions, and facilities for which applications are submitted by sponsoring organizations. Any institution applying for participation in the Program must be notified of approval or disapproval by the State agency in writing within 30 days of filing a complete and correct application. If an institution submits an incomplete application, the State agency must notify the institution within 15 days of receipt of the application and must provide technical assistance, if necessary, to the institution for the purpose of completing its application. Any disapproved applicant must be notified of the procedures for seeking an administrative review (in accordance with paragraphs (k) or (l) of this section, as appropriate). The application procedures must include or conform to the following requirements:

(1) *Agreements.* The State agency, by written consent of the State agency and the institutions, must renew agreements with institutions not less frequently than annually. The State agency is prohibited from entering into an agreement that is effective during two fiscal years, but may nevertheless establish an ongoing renewal process for the purpose of reviewing and approving applications from participating institutions throughout the fiscal year;

(2) *Participant eligibility information.* Centers must submit current information on the number of enrolled participants who are eligible for free, reduced price, and paid meals;

(3) *Enrollment information.* Sponsoring organizations of day care homes must submit the current total number of children enrolled, with an assurance that day care home providers' own children enrolled in the Program are eligible for free or reduced price meals;

(4) *Nondiscrimination statement.* Institutions must issue a non-discrimination policy statement and media release;

(5) *Management plan.* Sponsoring organizations must submit a management plan;

(6) *Administrative budget.* Institutions must submit an administrative budget;

(7) *Licensing/approval.* Institutions must document that each facility for which application is made meets Program licensing/approval requirements;

(8) *Proprietary centers.* Institutions must document that each proprietary center for which application is made meets the definition of a proprietary title XIX center or a proprietary title XX center, as applicable and as set forth at § 226.2;

(9) *Commodites/Cash-in-lieu of commodities.* Institutions must state their preference to receive cash or cash-in-lieu of commodities;

(10) *Advance payments.* Institutions must state their preference to receive all, part, or none of the advance payment;

(11) *Unserved facilities or participants.*

(i) *Criteria.* The State agency must develop criteria for determining whether a new sponsoring

organization's participation will help ensure the delivery of benefits to otherwise unserved facilities or participants, and must disseminate these criteria to new sponsoring organizations when they request information about applying to the Program; and

(ii) *Documentation.* The new sponsoring organization must submit documentation that its participation will help ensure the delivery of benefits to otherwise unserved facilities or participants in accordance with the State agency's criteria.

(12) *National disqualified list.* A State agency is prohibited from approving an institution's application if the institution or any of its principals is on the National disqualified list, and is prohibited from approving an application submitted by a sponsoring organization on behalf of a facility if the facility or any of its principals is on the National disqualified list;

(13) *Other publicly funded programs.* (i) *General.* A State agency is prohibited from approving an institution's application if, during the past seven years, the institution or any of the institution's principals have been declared ineligible for any other publicly funded program by reason of violating that program's requirements. However, this prohibition does not apply if the institution or the principal has been fully reinstated in, or determined eligible for, that program, including the payment of any debts owed;

(ii) *Certification.* As part of an application, institutions must submit a certification regarding their past performance in other publicly funded programs. The certification shall include language stating that institutions and individuals providing false certifications will be placed on the National disqualified list and will be subject to any other applicable civil or criminal penalties. This certification will include:

(A) A statement listing the publicly funded programs in which the institution and its principals have participated in the past seven years; and

(B) A certification that, during the past seven years, neither the institution nor any of its principals have been declared ineligible to participate in any other publicly funded program by reason of violating that program's requirements; or

(C) In lieu of the certification, documentation that the institution or the principal previously declared ineligible was later fully reinstated in, or determined eligible for, the program, including the payment of any debts owed; and

(iii) *Follow-up.* If the State agency has reason to believe that the institution or its principals were determined ineligible to participate in another publicly funded program by reason of violating that program's requirements, the State agency must follow up with the entity administering the publicly funded program to gather sufficient evidence to determine whether the institution or its principals were, in fact, determined ineligible;

(14) *Criminal convictions.*

(i) *General.* A State agency is prohibited from approving an institution's application if the institution or any of its principals has been convicted of any activity that occurred during the past seven years and that indicated a lack of business integrity. A lack of business integrity includes fraud, antitrust violations, embezzlement, theft, forgery, bribery, falsification or destruction of records, making false statements, receiving stolen property, making false claims, obstruction of justice, or any other activity indicating a lack of business integrity as defined by the State agency; and

(ii) *Certification.* As part of an application, institutions must submit a certification regarding any criminal convictions. The certification shall include language stating that institutions and individuals providing false certifications will be placed on the National disqualified list and will be subject to any other applicable civil or criminal penalties. This certification will state that neither the institution nor any of its principals has been convicted of any activity that occurred during the past seven years and that indicated a lack of business integrity. A lack of business integrity includes fraud, antitrust violations, embezzlement, theft, forgery, bribery, falsification or destruction of records, making false statements, receiving stolen property, making false claims, obstruction of justice, or any other activity indicating a lack of business integrity as defined by the State agency;

(15) *Truth of applications and names and addresses.* Institutions must submit a certification that all information on the application is true and correct, along with the name, mailing address, and date of birth of the institution's executive director and chairman of the board of directors;

(16) *Outside employment policy.* Sponsoring organizations must submit an outside employment policy. The policy must restrict other employment by employees that interferes with an employee's performance of Program-related duties and responsibilities, including outside employment that constitutes a real or apparent conflict of interest. Sponsoring organizations that are participating on July 29, 2002 must submit an outside employment policy not later than September 27, 2002. The policy shall be effective unless disapproved by the State agency;

(17) *Bond.* Sponsoring organizations applying for initial participation on or after June 20, 2000, must submit a bond, if such bond is required by State law, regulation, or policy. If the State agency requires a bond for sponsoring organizations pursuant to State law, regulation, or policy, the State agency must submit a copy of that requirement and a list of sponsoring organizations posting a bond to the appropriate FNSRO on an annual basis; and

(18) Each new or renewing institution must submit information sufficient to document that it is financially viable, is administratively capable of operating the Program in accordance with this part, and has internal controls in effect to ensure accountability. To document this, any new institution must demonstrate in its application that it is capable of operating in conformance with the following performance standards, and any renewing institution must demonstrate in its application that it currently operates in conformance with the following performance standards. The State agency must only approve the applications of those institutions that meet these performance standards, and must deny the applications of those institutions that do not meet the standards.

(i) *Performance Standard 1—Financial viability and financial management.* The new or renewing institution must be financially viable. Program funds must be expended and accounted for in accordance with the requirements of this part, FNS Instruction 796–2 (''Financial Management in the Child and Adult Care Food Program''), and 7 CFR Parts 3015 and 3016. To demonstrate financial viability, the new or renewing institution must document that it meets the following criteria:

(A) *Description of Need/Recruitment.* A new sponsoring organization must demonstrate in its management plan that its participation will help ensure the delivery of Program benefits to otherwise unserved facilities or participants, in accordance with criteria developed by the State agency pursuant to paragraph (b)(11) of this section. All sponsoring organizations must demonstrate that they will use appropriate practices for recruiting

facilities, consistent with paragraph (p) of this section and any State agency requirements;

(B) *Fiscal Resources and Financial History.* An institution must demonstrate that it has adequate financial resources to operate the CACFP on a daily basis, has adequate sources of funds to withstand temporary interruptions in Program payments and/or fiscal claims against the institution, and can document financial viability (for example, through audits, financial statements, etc.); and

(C) *Administrative Budgets.* Costs in the institution's administrative budget must be necessary, reasonable, allowable, and appropriately documented;

(ii) *Performance Standard 2—Administrative capability.* The new or renewing institution must be administratively capable. Appropriate and effective management practices must be in effect to ensure that the Program operates in accordance with this part. To demonstrate administrative capability, the new or renewing institution must document that it meets the following criteria:

(A) Has an adequate number and type of qualified staff to ensure the operation of the Program in accordance with this part;

(B) If a sponsoring organization, documents in its management plan that it employs staff sufficient to meet the ratio of monitors to facilities set forth in § 226.16(b)(1), and the factors established by the State agency in accordance with § 226.6(f)(2); and

(C) If a sponsoring organization, has Program policies and procedures in writing that assign Program responsibilities and duties, and ensure compliance with civil rights requirements; and

(iii) *Performance Standard 3—Program accountability.* The new or renewing institution must have internal controls and other management systems in effect to ensure fiscal accountability and to ensure that the Program operates in accordance with the requirements of this part. To demonstrate Program accountability, the new or renewing institution must document that it meets the following criteria:

(A) *Board of directors.* Has adequate oversight of the Program by its governing board of directors;

(B) *Fiscal accountability.* Has a financial system with management controls specified in writing. For sponsoring organizations, these written operational policies must assure:

(*1*) Fiscal integrity and accountability for all funds and property received, held, and disbursed;

(*2*) The integrity and accountability of all expenses incurred;

(*3*) That claims are processed accurately, and in a timely manner;

(*4*) That funds and property are used, and expenses incurred, for authorized Program purposes; and

(*5*) That a system of safeguards and controls is in place to prevent and detect improper financial activities by employees;

(C) *Recordkeeping.* Maintains appropriate records to document compliance with Program requirements, including budgets, approved budget amendments, and, if applicable, management plans and appropriate records on facility operations;

(D) *Sponsoring organization operations.* A sponsoring organization must document in its management plan that it will:

(*1*) Provide adequate and regular training of sponsoring organization staff and sponsored facilities in accordance with §§ 226.15(e)(13) and 226.16(d);

(*2*) Perform monitoring in accordance with § 226.16(d), to ensure that sponsored facilities accountably and appropriately operate the Program;

(*3*) If applicable, accurately classify day care homes as tier I or tier II in accordance with § 226.15(f); and

(*4*) Have a system in place to ensure that administrative costs funded from Program reimbursements do not exceed regulatory limits set forth at §§ 226.12(a) and 226.16(b)(1); and

(E) *Facility level operations.* All independent centers and sponsored facilities must follow practices which result in the operation of the Program in accordance with the meal service, recordkeeping, and other operational requirements of this part. These practices must be documented in the independent center's application or in the sponsoring organization's management plan and must demonstrate that independent centers or sponsored facilities will:

(*1*) Provide meals that meet the meal patterns set forth in § 226.20;

(*2*) Comply with licensure or approval requirements set forth in paragraph (d) of this section;

(*3*) Have a food service that complies with applicable State and local health and sanitation requirements;

(*4*) Comply with civil rights requirements;

(*5*) Maintain complete and appropriate records on file; and

(*6*) Claim reimbursement only for eligible meals.

(c) *Denial of applications and termination of agreements.* (1) *Denial of a new institution's application.*

(i) *General.* If a new institution's application does not meet all of the requirements in paragraph (b) of this section and in §§ 226.15(b) and 226.16(b), the State agency must deny the application. If, in reviewing a new institution's application, the State agency determines that the institution has committed one or more serious deficiency listed in paragraph (c)(1)(ii) of this section, the State agency must initiate action to:

(A) Deny the new institution's application; and

(B) Disqualify the new institution and the responsible principals and responsible individuals (e.g., the person who signs the application).

(ii) *List of serious deficiencies for new institutions.* The list of serious deficiencies is not identical for each category of institution (new, renewing, participating) because the type of information likely to be available to the State agency is different, depending on whether the State agency is reviewing a new or renewing institution's application or is conducting a review of a participating institution. Serious deficiencies for new institutions are:

(A) Submission of false information on the institution's application, including but not limited to a determination that the institution has concealed a conviction for any activity that occurred during the past seven years and that indicates a lack of business integrity. A lack of business integrity includes fraud, antitrust violations, embezzlement, theft, forgery, bribery, falsification or destruction of records, making false statements, receiving stolen property, making false claims, obstruction of justice, or any other activity indicating a lack of business integrity as defined by the State agency; or

(B) Any other action affecting the institution's ability to administer the Program in accordance with Program requirements.

(iii) *Serious deficiency notification procedures for new institutions.* If the State agency determines that a new institution has committed one or more serious deficiency listed in paragraph (c)(1)(ii) of this section, the State agency must use the following procedures to provide the institution and the responsible principals and responsible individuals with notice of the serious deficiency(ies) and an opportunity to take corrective action.

(A) *Notice of serious deficiency.* The State agency must notify the institution's executive director and chairman of the board of directors that the institution has been determined to be seriously deficient. The notice must identify the responsible principals and responsible individuals (e.g., for new

institutions, the person who signed the application) and must be sent to those persons as well. The State agency may specify in the notice different corrective action, and time periods for completing the corrective action, for the institution and the responsible principals and responsible individuals. At the same time the notice is issued, the State agency must add the institution to the State agency list, along with the basis for the serious deficiency determination, and provide a copy of the notice to the appropriate FNSRO. The notice must also specify:

(*1*) The serious deficiency(ies);

(*2*) The actions to be taken to correct the serious deficiency(ies);

(*3*) The time allotted to correct the serious deficiency(ies) in accordance with paragraph (c)(4) of this section.

(*4*) That the serious deficiency determination is not subject to administrative review;

(*5*) That failure to fully and permanently correct the serious deficiency(ies) within the allotted time will result in denial of the institution's application and the disqualification of the institution and the responsible principals and responsible individuals; and

(*6*) That the State agency will not pay any claims for reimbursement for eligible meals served or allowable administrative expenses incurred until the State agency has approved the institution's application and the institution has signed a Program agreement.

(B) *Successful corrective action.*

(*1*) If corrective action has been taken to fully and permanently correct the serious deficiency(ies) within the allotted time and to the State agency's satisfaction, the State agency must:

(*i*) notify the institution's executive director and chairman of the board of directors, and the responsible principals and responsible individuals, that the State agency has rescinded its serious deficiency determination; and

(*ii*) offer the new institution the opportunity to resubmit its application. If the new institution resubmits its application, the State agency must complete its review of the application within 30 days after receiving a complete and correct application.

(*2*) If corrective action is complete for the institution but not for all of the responsible principals and responsible individuals (or vice versa), the State agency must:

(*i*) continue with the actions (as set forth in paragraph (c)(1)(iii)(C) of this section) against the remaining parties;

(*ii*) at the same time the notice is issued, the State agency must also update the State agency list to indicate that the serious deficiency(ies) has(ve) been corrected and provide a copy of the notice to the appropriate FNSRO; and

(*iii*) if the new institution has corrected the serious deficiency(ies), offer it the opportunity to resubmit its application. If the new institution resubmits its application, the State agency must complete its review of the application within 30 days after receiving a complete and correct application.

(C) *Application denial and proposed disqualification.* If timely corrective action is not taken to fully and permanently correct the serious deficiency(ies), the State agency must notify the institution's executive director and chairman of the board of directors, and the responsible principals and responsible individuals, that the institution's application has been denied. At the same time the notice is issued, the State agency must also update the State agency list and provide a copy of the notice to the appropriate FNSRO. The notice must also specify:

(*1*) That the institution's application has been denied and the State agency is proposing to disqualify the institution and the responsible principals and responsible individuals;

(*2*) The basis for the actions; and

(*3*) The procedures for seeking an administrative review (in accordance with paragraph (k) of this section) of the application denial and proposed disqualifications.

(D) *Program payments.* The State agency is prohibited from paying any claims for reimbursement from a new institution for eligible meals served or allowable administrative expenses incurred until the State agency has approved its application and the institution and State agency have signed a Program agreement.

(E) *Disqualification.* When the time for requesting an administrative review expires or when the administrative review official upholds the State agency's denial and proposed disqualifications, the State agency must notify the institution's executive director and chairman of the board of directors, and the responsible principals and responsible individuals that the institution and the responsible principal and responsible individuals have been disqualified. At the same time the notice is issued, the State agency must also update the State agency list and provide a copy of the notice and the mailing address and date of birth for each responsible principal and responsible individual to the appropriate FNSRO.

(2) *Denial of a renewing institution's application.*

(i) *General.* If a renewing institution's application does not meet all of the requirements in paragraph (b) of this section and in §§ 226.15(b) and 226.16(b), the State agency must deny the application. If, in reviewing a renewing institution's application, the State agency determines that the institution has committed one or more serious deficiency listed in paragraph (c)(2)(ii) of this section, the State agency must *initiate* action to deny the renewing institution's application and *initiate* action to disqualify the renewing institution and the responsible principals and responsible individuals.

(ii) *List of serious deficiencies for renewing institutions.* The list of serious deficiencies is not identical for each category of institution (new, renewing, participating) because the type of information likely to be available to the State agency is different, depending on whether the State agency is reviewing a new or renewing institution's application or is conducting a review of a participating institution. Serious deficiencies for renewing institutions are:

(A) Submission of false information on the institution's application, including but not limited to a determination that the institution has concealed a conviction for any activity that occurred during the past seven years and that indicates a lack of business integrity. A lack of business integrity includes fraud, antitrust violations, embezzlement, theft, forgery, bribery, falsification or destruction of records, making false statements, receiving stolen property, making false claims, obstruction of justice, or any other activity indicating a lack of business integrity as defined by the State agency;

(B) Failure to operate the Program in conformance with the performance standards set forth in paragraph (b)(18) of this section;

(C) Failure to comply with the bid procedures and contract requirements of applicable Federal procurement regulations;

(D) Use of a food service management company that is in violation of health codes;

(E) Failure by a sponsoring organization of day care homes to properly classify day care homes as tier I or tier II in accordance with § 226.15(f);

(F) Failure by a sponsoring organization to properly train or monitor sponsored facilities in accordance with § 226.16(d);

(G) Failure to perform any of the other financial and administrative responsibilities required by this part;

(H) Failure to properly implement and administer the day care home termination and administrative review provisions set forth at paragraph (l) of this section and § 226.16(l); or

(I) any other action affecting the institution's ability to administer the Program in accordance with Program requirements.

(iii) *Serious deficiency notification procedures for renewing institutions.* If the State agency determines that a renewing institution has committed one or more serious deficiency listed in paragraph (c)(2)(ii) of this section, the State agency must use the following procedures to provide the institution and the responsible principals and responsible individuals notice of the serious deficiency(ies) and an opportunity to take corrective action.

(A) *Notice of serious deficiency.* The State agency must notify the institution's executive director and chairman of the board of directors that the institution has been determined to be seriously deficient. The notice must identify the responsible principals and responsible individuals and must be sent to those persons as well. The State agency may specify in the notice different corrective action, and time periods for completing the corrective action, for the institution and the responsible principals and responsible individuals. At the same time the notice is issued, the State agency must add the institution to the State agency list, along with the basis for the serious deficiency determination, and provide a copy of the notice to the appropriate FNSRO. The notice must also specify:

(*1*) The serious deficiency(ies);

(*2*) The actions to be taken to correct the serious deficiency(ies);

(*3*) The time allotted to correct the serious deficiency(ies) in accordance with paragraph (c)(4) of this section;

(*4*) That the serious deficiency determination is not subject to administrative review.

(*5*) That failure to fully and permanently correct the serious deficiency(ies) within the allotted time will result in the State agency's denial of the institution's application, the proposed termination of the institution's agreement (if the State agency has temporarily extended the agreement pursuant to paragraph (c)(2)(iii)(D) of this section) and the proposed disqualification of the institution and the responsible principals and responsible individuals; and

(*6*) That the institution's voluntary termination of its agreement with the State agency after having been notified that it is seriously deficient will still result in the instituion's formal termination by the State agency and placement of the institution and its responsible principals and responsible individuals on the National disqualified list.

(B) *Successful corrective action.*

(*1*) If corrective action has been taken to fully and permanently correct the serious deficiency(ies) within the allotted time and to the State agency's satisfaction, the State agency must:

(*i*) Notify the institution's executive director and chairman of the board of directors, and the responsible principals and responsible individuals, that the State agency has rescinded its serious deficiency determination; and

(*ii*) Offer the renewing institution the opportunity to resubmit its application. If the renewing institution resubmits its application, the State agency must complete its review of the application within 30 days after receiving a complete and correct application.

(*2*) If corrective action is complete for the institution but not for all of the responsible principals and responsible individuals (or vice versa), the State agency must:

(*i*) continue with the actions (as set forth in paragraph (c)(2)(iii)(C) of this section) against the remaining parties;

(*ii*) at the same time the notice is issued, the State agency must also update the State agency list to indicate that the serious deficiency(ies) has(ve) been corrected and provide a copy of the notice to the appropriate FNSRO; and

(*iii*) if the renewing institution has corrected the serious deficiency(ies), offer it the opportunity to resubmit its application. If the renewing institution resubmits its application, the State agency must complete its review of the application within 30 days after receiving a complete and correct application.

(C) *Application denial and proposed disqualification.* If timely corrective action is not taken to fully and permanently correct the serious deficiency(ies), the State agency must notify the institution's executive director and chairman of the board of directors, and the responsible principals and responsible individuals, that the institution's application has been denied. At the same time the notice is issued, the State agency must update the State agency list and provide a copy of the notice to the appropriate FNSRO. The notice must also specify:

(*1*) That the institution's application has been denied and the State agency is proposing to terminate the institution's temporarily-extended agreement and to disqualify the institution and the responsible principals and responsible individuals;

(*2*) The basis for the actions;

(*3*) That, if the institution voluntarily terminates its agreement after receiving the notice of the proposed termination, the institution and the responsible principals and responsible individuals will be disqualified;

(*4*) The procedures for seeking an administrative review (in accordance with paragraph (k) of this section) of the application denial and proposed disqualifications; and

(*5*) That the institution may continue to participate in the Program and receive Program reimbursement for eligible meals served and allowable administrative costs incurred until its administrative review is completed.

(D) *Program payments and extended agreement.* If the renewing institution's agreement expires before the end of the time allotted for corrective action, and/or the conclusion of any administrative review requested by the renewing institution:

(1) The State agency must temporarily extend its current agreement with the renewing institution and continue to pay any valid unpaid claims for reimbursement for eligible meals served and allowable administrative expenses incurred; and

(2) The actions set forth in paragraph (c)(2)(iii)(D)*(1)* of this section must be taken either until the serious deficiency(ies) is corrected or until the institution's agreement is terminated, including the period of any administrative review;

(E) *Agreement termination and disqualification.* When the time for requesting an administrative review expires or when the administrative review official upholds the State agency's denial of the institution's application, the proposed termination, and the proposed disqualifications, the State agency must:

(*1*) Notify the institution's executive director and chairman of the board of directors, and the responsible principals and responsible individuals, that the temporarily-extended agreement has been terminated and that the institution and the responsible principals and responsible individuals have been disqualified;

(*2*) Update the State agency list at the time such notice is issued; and

(*3*) Provide a copy of the notice and the mailing address and date of birth for each responsible principal and responsible individual to the appropriate FNSRO.

(3) *Termination of a participating institution's agreement.* (i) *General.* If the State agency holds an agreement with an institution operating in more than one State that has been disqualified from the Program by another State agency and placed on the National disqualified list, the State agency must terminate the institution's agreement effective no later than 45 days of the date of the institution's disqualification by the other State agency. At the same time the notice of termination is issued, the State agency must add the institution to the State agency list and indicate that the institution's agreement has been terminated and provide a copy of the notice to the appropriate FNSRO. If the State agency determines that a participating institution has committed one or more serious deficiency listed in paragraph (c)(3)(ii) of this section, the State agency must *initiate* action to terminate the agreement of a participating institution and *initiate* action to disqualify the institution and any responsible principals and responsible individuals.

(ii) *List of serious deficiencies for participating institutions.* The list of serious deficiencies is not identical for each category of institution (new, renewing, participating) because the type of information likely to be available to the State agency is different, depending on whether the State agency is reviewing a new or renewing institution's application or is conducting a review of a participating institution. Serious deficiencies for participating institutions are:

(A) Submission of false information on the institution's application, including but not limited to a determination that the institution has concealed a conviction for any activity that occurred during the past seven years and that indicates a lack of business integrity. A lack of business integrity includes fraud, antitrust violations, embezzlement, theft, forgery, bribery, falsification or destruction of records, making false statements, receiving stolen property, making false claims, obstruction of justice, or any other activity indicating a lack of business integrity as defined by the State agency;

(B) Permitting an individual who is on the National disqualified list to serve in a principal capacity with the institution or, if a sponsoring organization, permitting such an individual to serve as a principal in a sponsored center or as a day care home;

(C) Failure to operate the Program in conformance with the performance standards set forth in paragraph (b)(18) of this section;

(D) Failure to comply with the bid procedures and contract requirements of applicable Federal procurement regulations;

(E) Failure to return to the State agency any advance payments that exceeded the amount earned for serving eligible meals, or failure to return disallowed start-up or expansion payments;

(F) Failure to maintain adequate records;

(G) Failure to adjust meal orders to conform to variations in the number of participants;

(H) Claiming reimbursement for meals not served to participants;

(I) Claiming reimbursement for a significant number of meals that do not meet Program requirements;

(J) Use of a food service management company that is in violation of health codes;

(K) Failure of a sponsoring organization to disburse payments to its facilities in accordance with the regulations at § 226.16(g) and (h) or in accordance with its management plan;

(L) Claiming reimbursement for meals served by a proprietary title XX child care center during a calendar month in which less than 25 percent of its enrolled children, or 25 percent of its licensed capacity, whichever is less, were title XX beneficiaries;

(M) Claiming reimbursement for meals served by a proprietary title XIX or title XX adult day care center during a calendar month in which less than 25 percent of its enrolled adult participants were title XIX or title XX beneficiaries;

(N) Failure by a sponsoring organization of day care homes to properly classify day care homes as tier I or tier II in accordance with § 226.15(f);

(O) Failure by a sponsoring organization to properly train or monitor sponsored facilities in accordance with § 226.16(d);

(P) Use of day care home funds by a sponsoring organization to pay for the sponsoring organization's administrative expenses;

(Q) Failure to perform any of the other financial and administrative responsibilities required by this part;

(R) Failure to properly implement and administer the day care home termination and administrative review provisions set forth at paragraph (l) of this section and § 226.16(l);

(S) The fact the institution or any of the institution's principals have been declared ineligible for any other publicly funded program by reason of violating that program's requirements. However, this prohibition does not apply if the institution or the principal has been fully reinstated in, or is now eligible to participate in, that program, including the payment of any debts owed;

(T) Conviction of the institution or any of its principals for any activity that occurred during the past seven years and that indicates a lack of business integrity. A lack of business integrity includes fraud, antitrust violations, embezzlement, theft, forgery, bribery, falsification or destruction of records, making false statements, receiving stolen property, making false claims, obstruction of justice, or any other activity indicating a lack of business integrity as defined by the State agency; or

(U) Any other action affecting the institution's ability to administer the Program in accordance with Program requirements.

(iii) *Serious deficiency notification procedures for participating institutions.* If the State agency determines that a participating institution has committed one or more serious deficiency listed in paragraph (c)(3)(ii) of this section, the State agency must use the following procedures to provide the institution and the responsible principals and responsible individuals notice of the serious deficiency(ies) and an opportunity to take corrective action. However, if the serious deficiency(ies) constitutes an imminent threat to the health or safety of participants, or the institution has engaged in activities that threaten the public health or safety, the State agency must follow the procedures in paragraph (c)(5)(i) of this section instead of the procedures below. Further, if the serious deficiency is the submission of a false or fraudulent claim, in addition to the procedures below, the State agency may suspend the institution's participation in accordance with paragraph (c)(5)(ii) of this section.

(A) *Notice of serious deficiency.* The State agency must notify the institution's executive director and chairman of the board of directors that the institution has been determined seriously deficient. The notice must identify the responsible principals and responsible individuals and must be sent to those persons as well. The State agency may specify in the notice different corrective action and time periods for completing the corrective action for the institution and the responsible principals and responsible individuals. At the same time the notice is issued, the State agency must add the institution to the State agency list, along with the basis for the serious deficiency determination, and provide a copy of

the notice to the appropriate FNSRO. The notice must also specify:

(*1*) The serious deficiency(ies);

(*2*) The actions to be taken to correct the serious deficiency(ies);

(*3*) The time allotted to correct the serious deficiency(ies) in accordance with paragraph (c)(4) of this section;

(*4*) That the serious deficiency determination is not subject to administrative review.

(*5*) That failure to fully and permanently correct the serious deficiency(ies) within the allotted time will result in the State agency's proposed termination of the institution's agreement and the proposed disqualification of the institution and the responsible principals and responsible individuals; and

(*6*) That the institution's voluntary termination of its agreement with the State agency after having been notified that it is seriously deficient will still result in the instituion's formal termination by the State agency and placement of the institution and its responsible principals and responsible individuals on the National disqualified list.

(B) *Successful corrective action.*

(*1*) If corrective action has been taken to fully and permanently correct the serious deficiency(ies) within the allotted time and to the State agency's satisfaction, the State agency must:

(*i*) Notify the institution's executive director and chairman of the board of directors, and the responsible principals and responsible individuals, that the State agency has rescinded its serious deficiency determination; and

(*ii*) Offer the renewing institution the opportunity to resubmit its application. If the renewing institution resubmits its application, the State agency must complete its review of the application within 30 days after receiving a complete and correct application.

(*2*) If corrective action is complete for the institution but not for all of the responsible principals and responsible individuals (or vice versa), the State agency must:

(*i*) Continue with the actions (as set forth in paragraph (c)(3)(iii)(C) of this section) against the remaining parties;

(*ii*) At the same time the notice is issued, the State agency must also update the State agency list to indicate that the serious deficiency(ies) has(ve) been corrected and provide a copy of the notice to the appropriate FNSRO; and

(*iii*) If the renewing institution has corrected the serious deficiency(ies), offer it the opportunity to resubmit its application. If the renewing institution resubmits its application, the State agency must complete its review of the application within 30 days after receiving a complete and correct application.

(C) *Proposed termination and proposed disqualification.* If timely corrective action is not taken to fully and permanently correct the serious deficiency(ies), the State agency must notify the institution's executive director and chairman of the board of directors, and the responsible principals and responsible individuals, that the State agency is proposing to terminate the institution's agreement and to disqualify the institution and the responsible principals and responsible individuals. At the same time the notice is issued, the State agency must also update the State agency list and provide a copy of the notice to the appropriate FNSRO. The notice must also specify:

(*1*) That the State agency is proposing to terminate the institution's agreement and to disqualify the institution and the responsible principals and responsible individuals;

(*2*) The basis for the actions;

(*3*) That, if the institution voluntarily terminates its agreement after receiving the notice of proposed termination, the institution and the responsible principals and responsible individuals will be disqualified.

(*4*) The procedures for seeking an administrative review (in accordance with paragraph (k) of this section) of the application denial and proposed disqualifications; and

(*5*) That, unless participation has been suspended, the institution may continue to participate and receive Program reimbursement for eligible meals served and allowable administrative costs incurred until its administrative review is completed.

(D) *Program payments.* Unless participation has been suspended, the State agency must continue to pay any valid unpaid claims for reimbursement for eligible meals served and allowable administrative expenses incurred until the serious deficiency(ies) is corrected or the institution's agreement is terminated, including the period of any administrative review.

(E) *Agreement termination and disqualification.* When the time for requesting an administrative review expires or when the administrative review official upholds the State agency's proposed termination and disqualifications, the State agency must:

(*1*) Notify the institution's executive director and chairman of the board of directors, and the responsible principals and responsible individuals, that the institution's agreement has been terminated and that the institution and the responsible principals and responsible individuals have been disqualified;

(*2*) Update the State agency list at the time such notice is issued; and

(*3*) Provide a copy of the notice and the mailing address and date of birth for each responsible principal and responsible individual to the appropriate FNSRO.

(4) *Corrective action timeframes.*

(i) *General.* Except as noted in this paragraph (c)(4), the State agency is prohibited from allowing more than 90 days for corrective action from the date the institution receives the serious deficiency notice.

(ii) *Unlawful practices.* If the State agency determines that the institution has engaged in unlawful practices, submitted false or fraudulent claims or other information to the State agency, or been convicted of or concealed a criminal background, the State agency is prohibited from allowing more than 30 days for corrective action.

(iii) *Long-term changes.* For serious deficiencies requiring the long-term revision of management systems or processes, the State agency may permit more than 90 days to complete the corrective action as long as a corrective action plan is submitted to and approved by the State agency within 90 days (or such shorter deadline as the State agency may establish). The corrective action must include milestones and a definite completion date that the State agency will monitor. The determination of serious deficiency will remain in effect until the State agency determines that the serious deficiency(ies) has(ve) been fully and permanently corrected within the allotted time.

(5) *Suspension of an institution's participation.* A State agency is prohibited from suspending an institution's participation (including all Program payments) except for the reasons set forth in this paragraph (c)(5).

(i) *Public health or safety.*

(A) *General.* If State or local health or licensing officials have cited an institution for serious health or safety violations, the State agency must immediately suspend the institution's Program participation, initiate action to terminate the institution's agreement, and initiate action to disqualify the institution and the responsible principals and responsible individuals prior to any formal action to revoke the institution's licensure or approval. If the State agency determines that there is an imminent threat to the health or safety of participants at an institution, or that the institution has engaged in activities that threaten the public health or safety,

the State agency must immediately notify the appropriate State or local licensing and health authorities and take action that is consistent with the recommendations and requirements of those authorities. An imminent threat to the health or safety of participants and engaging in activities that threaten the public health or safety constitute serious deficiencies; however, the State agency must use the procedures in this paragraph (c)(5)(i) (instead of the procedures in paragraph (c)(3) of this section) to provide the institution notice of the suspension of participation, serious deficiency, proposed termination of the institution's agreement, and proposed disqualification of the responsible principals and responsible individuals.

(B) *Notice of suspension, serious deficiency, proposed termination, and proposed disqualification.* The State agency must notify the institution's executive director and chairman of the board of directors that the institution's participation (including Program payments) has been suspended, that the institution has been determined to be seriously deficient, and that the State agency proposes to terminate the institution's agreement and to disqualify the institution and the responsible principals and responsible individuals. The notice must also identify the responsible principals and responsible individuals and must be sent to those persons as well. At the same time this notice is sent, the State agency must add the institution and the responsible principals and responsible individuals to the State agency list, along with the basis for the serious deficiency determination and provide a copy of the notice to the appropriate FNSRO. The notice must also specify:

(*1*) That the State agency is suspending the institution's participation (including Program payments), proposing to terminate the institution's agreement, and proposing to disqualify the institution and the responsible principals and responsible individuals;

(*2*) The serious deficiency(ies);

(*3*) That, if the institution voluntary terminates its agreement with the State agency after having been notified of the proposed termination, the institution and the responsible principals and responsible individuals will be disqualified;

(*4*) That the serious deficiency determination is not subject to administrative review;

(*5*) The procedures for seeking an administrative review (consistent with paragraph (k) of this section) of the suspension, proposed termination, and proposed disqualifications; and

(*6*) That, if the administrative review official overturns the suspension, the institution may claim reimbursement for eligible meals served and allowable administrative costs incurred during the suspension period.

(C) *Agreement termination and disqualification.* When the time for requesting an administrative review expires or when the administrative review official upholds the State agency's proposed termination and disqualifications, the State agency must:

(*1*) Notify the institution's executive director and chairman of the board of directors, and the responsible principals and responsible individuals, that the institution's agreement has been terminated and that the institution and the responsible principals and responsible individuals have been disqualified;

(*2*) update the State agency list at the time such notice is issued; and

(*3*) provide a copy of the notice and the mailing address and date of birth for each responsible principal and responsible individual to the appropriate FNSRO.

(D) *Program payments.* The State agency is prohibited from paying any claims for reimbursement from a suspended institution. However, if the suspended institution prevails in the administrative review of the proposed termination, the State agency must pay any claims for reimbursement for eligible meals served and allowable administrative costs incurred during the suspension period.

(ii) *False or fraudulent claims.*

(A) *General.* If the State agency determines that an institution has knowingly submitted a false or fraudulent claim, the State agency *may* initiate action to suspend the institution's participation and must *initiate* action to terminate the institution's agreement and initiate action to disqualify the institution and the responsible principals and responsible individuals (in accordance with paragraph (c)(3) of this section). The submission of a false or fraudulent claim constitutes a serious deficiency as set forth in paragraph (c)(3)(ii) of this section, which lists serious deficiencies for participating institutions. If the State agency wishes to suspend the institution's participation, it must use the following procedures to issue the notice of proposed suspension of participation *at the same time* it issues the serious deficiency notice, which must include the information described in paragraph (c)(3)(iii)(A) of this section.

(B) *Proposed suspension of participation.* If the State agency decides to propose to suspend an institution's participation due to the institution's submission of a false or fraudulent claim, it must notify the institution's executive director and chairman of the board of directors that the State agency intends to suspend the institution's participation (including all Program payments) unless the institution requests a review of the proposed suspension. At the same time the notice is issued, the State agency must also update the State agency list and provide a copy of the notice to the appropriate FNSRO. The notice must identify the responsible principals and responsible individuals and must be sent to those persons as well. The notice must also specify:

(*1*) That the State agency is proposing to suspend the institution's participation;

(*2*) That the proposed suspension is based on the institution's submission of a false or fraudulent claim, as described in the serious deficiency notice;

(*3*) The effective date of the suspension (which may be no earlier than 10 days after the institution receives the suspension notice);

(*4*) The name, address and telephone number of the suspension review official who will conduct the suspension review; and

(*5*) That if the institution wishes to have a suspension review, it must request a review and submit to the suspension review official written documentation opposing the proposed suspension within 10 days of the institution's receipt of the notice.

(C) *Suspension review.* If the institution requests a review of the State agency's proposed suspension of participation, the suspension review must be heard by a suspension review official who must:

(1) Be an independent and impartial person other than, and not accountable to, any person involved in the decision to initiate suspension proceedings;

(2) Immediately notify the State agency that the institution has contested the proposed suspension and must obtain from the State agency its notice of proposed suspension of participation, along with all supporting documentation; and

(3) Render a decision on suspension of participation within 10 days of the deadline for receiving the institution's documentation opposing the proposed suspension.

(D) *Suspension review decision.* If the suspension review official determines that the State agency's proposed suspension is not appropriate, the State

agency is prohibited from suspending participation. If the suspension review official determines, based on a preponderance of the evidence, that the State agency's action was appropriate, the State agency must suspend the institution's participation (including all Program payments), effective on the date of the suspension review decision. The State agency must notify the institution's executive director and chairman of the board of directors, and the responsible principals and responsible individuals, that the institution's participation has been suspended. At the same time the notice is issued, the State agency must also update the State agency list and provide a copy of the notice to the appropriate FNSRO. The notice must also specify:

(*1*) That the State agency is suspending the institution's participation (including Program payments);

(*2*) The effective date of the suspension (the date of the suspension review decision);

(*3*) The procedures for seeking an administrative review (in accordance with paragraph (k) of this section) of the suspension; and

(*4*) That if the administrative review official overturns the suspension, the institution may claim reimbursement for eligible meals served and allowable administrative costs incurred during the suspension period.

(E) *Program payments.* A State agency is prohibited from paying any claims for reimbursement submitted by a suspended institution. However, if the institution suspended for the submission of false or fraudulent claims is a sponsoring organization, the State agency must ensure that sponsored facilities continue to receive reimbursement for eligible meals served during the suspension period. If the suspended institution prevails in the administrative review of the proposed termination, the State agency must pay any valid unpaid claims for reimbursement for eligible meals served and allowable administrative costs incurred during the suspension period.

(F) *Maximum time for suspension.* Under no circumstances may the suspension of participation remain in effect for more than 120 days following the suspension review decision.

(6) *FNS determination of serious deficiency.* (i) *General.* FNS may determine independently that a participating institution has committed one or more serious deficiency listed in paragraph (c)(3)(ii) of this section, which lists serious deficiencies for participating institutions.

(ii) *Serious deficiency notification procedures.* If FNS determines that an institution has committed one or more serious deficiency listed in paragraph (c)(3)(ii) of this section (the list of serious deficiencies for participating institutions), FNS will use the following procedures to provide the institution and the responsible principals and responsible individuals with notice of the serious deficiency(ies) and an opportunity to take corrective action.

(A) *Notice of serious deficiency.* FNS will notify the institution's executive director and chairman of the board of directors that the institution has been found to be seriously deficient. The notice will identify the responsible principals and responsible individuals and will be sent to them as well. FNS may specify in the notice different corrective action and time periods for completing the corrective action, for the institution and the responsible principals and responsible individuals. The notice will also specify:

(*1*) The serious deficiency(ies);

(*2*) The actions to be taken to correct the serious deficiency(ies);

(*3*) The time allotted to correct the serious deficiency(ies) in accordance with paragraph (c)(4) of this section;

(*4*) That failure to fully and permanently correct the serious deficiency(ies) within the allotted time, or the institution's voluntary termination of its agreement(s) with any State agency after having been notified that it is seriously deficient, will result in the proposed disqualification of the institution and the responsible principals and responsible individuals and the termination of its agreement(s) with all State agencies; and

(*5*) That the serious deficiency determination is not subject to administrative review.

(B) *Suspension of participation.* If FNS determines that there is an imminent threat to the health or safety of participants at an institution, or that the institution has engaged in activities that threaten the public health or safety, any State agency that holds an agreement with the institution must suspend the participation of the institution. If FNS determines that the institution has submitted a false or fraudulent claim, it may require any State agency that holds an agreement with the institution to initiate action to suspend the institution's participation for false or fraudulent claims in accordance with paragraph (c)(5)(ii) of this section (which deals with an institution's suspension by a State agency for submission of false or fraudulent claims). In both cases, FNS will provide the State agency the information necessary to support these actions and, in the case of a false and fraudulent claim, will provide an individual to serve as the suspension review official if requested by the State agency.

(C) *Successful corrective action.*

(*1*) If corrective action has been taken to fully and permanently correct the serious deficiency(ies) within the allotted time and to FNS's satisfaction, FNS will notify the institution's executive director and chairman of the board of directors, and the responsible principals and responsible individuals, that it has rescinded its serious deficiency determination; and

(*2*) If corrective action is complete for the institution but not for all of the responsible principals and responsible individuals (or vice versa), FNS will continue with the actions (as set forth in paragraph (c)(6)(ii)(D) of this section) against the remaining parties.

(D) *Proposed disqualification.* If timely corrective action is not taken to fully and permanently correct the serious deficiency(ies), FNS will notify the institution's executive director and chairman of the board of directors, and the responsible principals and responsible individuals, that FNS is proposing to disqualify them. The notice will also specify:

(*1*) That FNS is proposing to disqualify the institution and the responsible principals and responsible individuals;

(*2*) The basis for the actions;

(*3*) That, if the institution seeks to voluntarily terminate its agreement after receiving the notice of proposed disqualification, the institution and the responsible principals and responsible individuals will be disqualified;

(*4*) The procedures for seeking an administrative review (in accordance with paragraph (k) of this section) of the proposed disqualifications;

(*5*) That unless participation has been suspended, the institution may continue to participate and receive Program reimbursement for eligible meals served and allowable administrative costs incurred until its administrative review is completed; and

(*6*) That if the institution does not prevail in the administrative review, any State agency holding an agreement with the institution will be required to terminate that agreement and the institution is prohibited from seeking an administrative review of the termination of the agreement by the State agency(ies).

(E) *Disqualification.* When the time for requesting an administrative review expires or when the administrative review official upholds FNS's proposed

disqualifications, FNS will notify the institution's executive director and chairman of the board of directors, and the responsible principals and responsible individuals, that the institution and the responsible principal or responsible individual have been disqualified.

(F) *Program payments.* If the State agency holds an agreement with an institution that FNS has determined to be seriously deficient, the State agency must continue to pay any valid unpaid claims for reimbursement for eligible meals served and allowable administrative expenses incurred until the serious deficiency(ies) is corrected or the State agency terminates the institution's agreement, including the period of any administrative review, unless participation has been suspended.

(G) *Required State agency action.* (*1*) *Disqualified institutions.* If the State agency holds an agreement with an institution that FNS determines to be seriously deficient and subsequently disqualifies, the State agency must terminate the institution's agreement effective no later than 45 days after the date of the institution's disqualification by FNS. As noted in paragraph (k)(3)(iv) of this section, the termination is not subject to administrative review. At the same time the notice of termination is issued, the State agency must add the institution to the State agency list and provide a copy of the notice to the appropriate FNSRO.

(*2*) *Disqualified principals.* If the State agency holds an agreement with an institution whose principal FNS determines to be seriously deficient and subsequently disqualifies, the State agency must determine the institution to be seriously deficient and initiate action to terminate and disqualify the institution in accordance with the procedures in paragraph (c)(3) of this section. The State agency must initiate these actions no later than 45 days after the date of the principal's disqualification by FNS.

(7) *National disqualified list.*

(i) *Maintenance and availability of list.* FNS will maintain the National disqualified list and make it available to all State agencies and all sponsoring organizations.

(ii) *Effect on institutions.* No organization on the National disqualified list may participate in the Program as an institution. As noted in paragraph (b)(12) of this section, the State agency must deny the application of a new or renewing institution if the institution is on the National disqualified list. In addition, as noted in paragraphs (c)(3)(i) and (c)(6)(ii)(G)(*1*) of this section, the State agency must terminate the agreement of any participating institution that is disqualified by another State agency or by FNS.

(iii) *Effect on sponsored centers.* No organization on the National disqualified list may participate in the Program as a sponsored center. As noted in § 226.16(b) and paragraph (b)(12) of this section, a sponsoring organization is prohibited from submitting an application on behalf of a sponsored facility (and a State agency is prohibited from approving such an application) if the facility is on the National disqualified list.

(iv) *Effect on individuals.* No individual on the National disqualified list may serve as a principal in any institution or facility or as a day care home provider.

(A) *Principal for an institution or a sponsored facility.* As noted in paragraph (b)(12) of this section, the State agency must deny the application of a new or renewing institution if any of the institution's principals is on the National disqualified list. As noted in paragraphs (c)(3)(ii)(B) and (c)(6)(ii)(G)(*2*) of this section, the State agency must declare an institution seriously deficient and initiate action to terminate the institution's agreement and disqualify the institution if the institution permits an individual who is on the National disqualified list to serve in a principal capacity for the institution or one of its facilities.

(B) *Principal for a sponsored facility.* As noted in § 226.16(b) and paragraph (b)(12) of this section, a sponsoring organization is prohibited from submitting an application on behalf of a sponsored facility (or a State agency from approving such an application) if any of the facility's principals are on the National disqualified list.

(C) *Serving as a day care home.* As noted in § 226.16(b) and paragraph (b)(12) of this section, a sponsoring organization is prohibited from submitting an application on behalf of a sponsored facility (and a State agency is prohibited from approving such an application) if the facility is on the National disqualified list.

(v) *Removal of institutions, principals, and individuals from the list.* Once included on the National disqualified list, an institution and responsible principals and responsible individuals remain on the list until such time as FNS, in consultation with the appropriate State agency, determines that the serious deficiency(ies) that led to their placement on the list has(ve) been corrected, or until seven years have elapsed since they were disqualified from participation. However, if the institution, principal or individual has failed to repay debts owed under the Program, they will remain on the list until the debt has been repaid.

(vi) *Removal of day care homes from the list.* Once included on the National disqualified list, a day care home will remain on the list until such time as the State agency determines that the serious deficiency(ies) that led to its placement on the list has(ve) been corrected, or until seven years have elapsed since its agreement was terminated for cause. However, if the day care home has failed to repay debts owed under the Program, it will remain on the list until the debt has been repaid.

(8) *State agency list.* (i) *Maintenance of the State agency list.* The State agency must maintain a State agency list (in the form of an actual paper or electronic list or retrievable paper records). The list must be made available to FNS upon request, and must include the following information:

(A) Institutions determined to be seriously deficient by the State agency, including the names and mailing addresses of the institutions and the status of the institutions as they move through the possible subsequent stages of corrective action, proposed termination, suspension, agreement termination, and/or disqualification, as applicable;

(B) Responsible principals and individuals who have been disqualified from participation by the State agency, including their names, mailing addresses, and dates of birth; and

(C) Day care home providers whose agreements have been terminated for cause by a sponsoring organization in the State, including their names, mailing addresses, and dates of birth.

(ii) *Referral of disqualified day care homes to FNS.* Within 10 days of receiving a notice of termination and disqualification from a sponsoring organization, the State agency must provide the appropriate FNSRO the name, mailing address, and date of birth of each day care home provider whose agreement is terminated for cause on or after July 29, 2002.

(iii) *Prior lists of disqualified day care homes.* If on July 29, 2002 the State agency maintains a list of day care homes that have been disqualified from participation, the State agency may continue to prohibit participation by those day care homes. However, the State agency must remove a day care home from its prior list no later than the time at which the State agency determines that the serious deficiency(ies) that led to the day care

home's placement on the list has(ve) been corrected or July 29, 2009 (unless the day care home has failed to repay debts owed under the Program). If the day care home has failed to repay its debt, the State agency may keep the day care home on its prior list until the debt has been repaid.

* * * * *

(f) * * *

(1) * * * The Program agreement must also notify the institution of the right of the State agency, the Department, and other State or Federal officials to make announced or unannounced reviews of their operations during the institution's normal hours of child or adult care operations and that anyone making such reviews must show photo identification that demonstrates that they are employees of one of these entities.

(2) * * * The State agency must establish factors, consistent with § 226.16(b)(1), that the State agency will consider in determining whether a sponsoring organization has sufficient staff to perform required monitoring responsibilities at all of its sponsored facilities. As part of its review of the management plan, the State agency must determine the appropriate level of staffing for each sponsoring organization, consistent with the staffing range of monitors set forth in § 226.16(b)(1) and the factors it has established. The State agency must ensure that each new sponsoring organization applying for participation after July 29, 2002 meets this requirement. The State agency must ensure that each currently participating sponsoring organization meets this requirement no later than July 29, 2003.

(3) * * * For a sponsoring organization of centers, the State agency is prohibited from approving the sponsoring organization's administrative budget, or any amendments to the budget, if the administrative budget shows that the Program will be charged for administrative costs in excess of 15 percent of the meal reimbursements estimated to be earned during the budget year. However, the State agency may waive this limit if the sponsoring organization provides justification that it requires Program funds in excess of 15 percent to pay its administrative costs and if the State agency is convinced that the institution will have adequate funding to provide meals meeting the requirements of § 226.20. The State agency must document all waiver approvals and denials in writing, and must provide a copy of all such letters to the appropriate FNSRO.

* * * * *

(k) *Administrative reviews for institutions and responsible principals and responsible individuals.*

(1) *General.* The State agency must develop procedures for offering administrative reviews to institutions and responsible principals and responsible individuals. The procedures must be consistent with paragraph (k) of this section.

(2) *Actions subject to administrative review.* Except as provided in § 226.8(g), the State agency must offer an administrative review for the following actions:

(i) *Application denial.* Denial of a new or renewing institution's application for participation (see paragraph (b) of this section, on State agency review of an institution's application; and paragraphs (c)(1) and (c)(2) of this section, on State agency denial of a new or renewing institution's application);

(ii) *Denial of sponsored facility application.* Denial of an application submitted by a sponsoring organization on behalf of a facility;

(iii) *Notice of proposed termination.* Proposed termination of an institution's agreement (see paragraphs (c)(2)(iii)(C), (c)(3)(iii)(C), and (c)(5)(i)(B) of this section, dealing with proposed termination of agreements with renewing institutions, participating institutions, and participating institutions suspended for health or safety violations);

(iv) *Notice of proposed disqualification of a responsible principal or responsible individual.* Proposed disqualification of a responsible principal or responsible individual (see paragraphs (c)(1)(iii)(C), (c)(2)(iii)(C), (c)(3)(iii)(C), and (c)(5)(i)(B) of this section, dealing with proposed disqualification of responsible principals or responsible individuals in new, renewing, and participating institutions, and participating institutions suspended for health or safety violations);

(v) *Suspension of participation.* Suspension of an institution's participation (see paragraphs (c)(5)(i)(B) and (c)(5)(ii)(D) of this section, dealing with suspension for health or safety reasons or submission of a false or fraudulent claim);

(vi) *Start-up or expansion funds denial.* Denial of an institution's application for start-up or expansion payments (see § 226.7(h));

(vii) *Advance denial.* Denial of a request for an advance payment (see § 226.10(b));

(viii) *Recovery of advances.* Recovery of all or part of an advance in excess of the claim for the applicable period. The recovery may be through a demand for full repayment or an adjustment of subsequent payments (see § 226.10(b)(3));

(ix) *Claim denial.* Denial of all or a part of an institution's claim for reimbursement (except for a denial based on a late submission under § 226.10(e)) (see §§ 226.10(f) and 226.14(a));

(x) *Claim deadline exceptions and requests for upward adjustments to a claim.* Decision by the State agency not to forward to FNS an exception request by an institution for payment of a late claim, or a request for an upward adjustment to a claim (see § 226.10(e));

(xi) *Overpayment demand.* Demand for the remittance of an overpayment (see § 226.14(a)); and

(xii) *Other actions.* Any other action of the State agency affecting an institution's participation or its claim for reimbursement.

(3) *Actions not subject to administrative review.* The State agency is prohibited from offering administrative reviews of the following actions:

(i) *FNS decisions on claim deadline exceptions and requests for upward adjustments to a claim.* A decision by FNS to deny an exception request by an institution for payment of a late claim, or for an upward adjustment to a claim (see § 226.10(e));

(ii) *Determination of serious deficiency.* A determination that an institution is seriously deficient (see paragraphs (c)(1)(iii)(A), (c)(2)(iii)(A), (c)(3)(iii)(A), and (c)(5)(i)(B) of this section, dealing with proposed disqualification of responsible principals or responsible individuals in new, renewing, and participating institutions, and participating institutions suspended for health or safety violations);

(iii) *Disqualification and placement on State agency list and National disqualified list.* Disqualification of an institution or a responsible principal or responsible individual, and the subsequent placement on the State agency list and the National disqualified list (see paragraphs (c)(1)(iii)(E), (c)(2)(iii)(E), (c)(3)(iii)(E), and (c)(5)(i)(C) of this section, dealing with proposals to disqualify related to new, renewing, and participating institutions, and in institutions suspended for health or safety violations); or

(iv) *Termination.* Termination of a participating institution's agreement, including termination of a participating institution's agreement based on the

disqualification of the institution by another State agency or FNS (see paragraphs (c)(3)(i) and (c)(7)(ii) of this section).

(4) *Provision of administrative review procedures to institutions and responsible principals and responsible individuals.* The State agency's administrative review procedures must be provided:

(i) Annually to all institutions;

(ii) To an institution and to each responsible principal and responsible individual when the State agency takes any action subject to an administrative review as described in paragraph (k)(2) of this section; and

(iii) Any other time upon request.

(5) *Procedures.* Except as described in paragraph (k)(9) of this section, which sets forth the circumstances under which an abbreviated administrative review is held, the State agency must follow the procedures in this paragraph (k)(5) when an institution or a responsible principal or responsible individual appeals any action subject to administrative review as described in paragraph (k)(2) of this section.

(i) *Notice of action.* The institution's executive director and chairman of the board of directors, and the responsible principals and responsible individuals, must be given notice of the action being taken or proposed, the basis for the action, and the procedures under which the institution and the responsible principals or responsible individuals may request an administrative review of the action.

(ii) *Time to request administrative review.* The request for administrative review must be submitted in writing not later than 15 days after the date the notice of action is received, and the State agency must acknowledge the receipt of the request for an administrative review within 10 days of its receipt of the request.

(iii) *Representation.* The institution and the responsible principals and responsible individuals may retain legal counsel, or may be represented by another person.

(iv) *Review of record.* Any information on which the State agency's action was based must be available to the institution and the responsible principals and responsible individuals for inspection from the date of receipt of the request for an administrative review.

(v) *Opposition.* The institution and the responsible principals and responsible individuals may refute the findings contained in the notice of action in person or by submitting written documentation to the administrative review official. In order to be considered, written documentation must be submitted to the administrative review official not later than 30 days after receipt of the notice of action.

(vi) *Hearing.* A hearing must be held by the administrative review official in addition to, or in lieu of, a review of written information only if the institution or the responsible principals and responsible individuals request a hearing in the written request for an administrative review. If the institution's representative, or the responsible principals or responsible individuals or their representative, fail to appear at a scheduled hearing, they waive the right to a personal appearance before the administrative review official, unless the administrative review official agrees to reschedule the hearing. A representative of the State agency must be allowed to attend the hearing to respond to the testimony of the institution and the responsible principals and responsible individuals and to answer questions posed by the administrative review official. If a hearing is requested, the institution, the responsible principals and responsible individuals, and the State agency must be provided with at least 10 days advance notice of the time and place of the hearing.

(vii) *Administrative review official.* The administrative review official must be independent and impartial. This means that, although the administrative review official may be an employee of the State agency, he/she must not have been involved in the action that is the subject of the administrative review, or have a direct personal or financial interest in the outcome of the administrative review. The institution and the responsible principals and responsible individuals must be permitted to contact the administrative review official directly if they so desire.

(viii) *Basis for decision.* The administrative review official must make a determination based solely on the information provided by the State agency, the institution, and the responsible principals and responsible individuals, and based on Federal and State laws, regulations, policies, and procedures governing the Program.

(ix) *Time for issuing a decision.* Within 60 days of the State agency's receipt of the request for an administrative review, the administrative review official must inform the State agency, the institution's executive director and chairman of the board of directors, and the responsible principals and responsible individuals, of the administrative review's outcome. This timeframe is an administrative requirement for the State agency and may not be used as a basis for overturning the State agency's action if a decision is not made within the specified timeframe.

(x) *Final decision.* The determination made by the administrative review official is the final administrative determination to be afforded the institution and the responsible principals and responsible individuals.

(6) *Federal audit findings.* FNS may assert a claim against the State agency, in accordance with the procedures set forth in § 226.14(c), when an administrative review results in the dismissal of a claim against an institution asserted by the State agency based upon Federal audit findings.

(7) *Record of result of administrative reviews.* The State agency must maintain searchable records of all administrative reviews and their disposition.

(8) *Combined administrative reviews for responsible principals and responsible individuals.* The State agency must conduct the administrative review of the proposed disqualification of the responsible principals and responsible individuals as part of the administrative review of the application denial, proposed termination, and/or proposed disqualification of the institution with which the responsible principals or responsible individuals are associated. However, at the administrative review official's discretion, separate administrative reviews may be held if the institution does not request an administrative review or if either the institution or the responsible principal or responsible individual demonstrates that their interests conflict.

(9) *Abbreviated administrative review.* The State agency must limit the administrative review to a review of written submissions concerning the accuracy of the State agency's determination if the application was denied or the State agency proposes to terminate the institution's agreement because:

(i) The information submitted on the application was false (see paragraphs (c)(1)(ii)(A), (c)(2)(ii)(A), and (c)(3)(ii)(A) of this section);

(ii) The institution, one of its sponsored facilities, or one of the principals of the institution or its facilities is on the national disqualified list (see paragraph (b)(12) of this section);

(iii) The institution, one of its sponsored facilities, or one of the principals of the institution or its facilities is ineligible to participate in any other publicly funded program by reason of violation of the requirements

of the program (see paragraph (b)(13) and (c)(3)(ii)(S) of this section); or

(iv) The institution, one of its sponsored facilities, or one of the principals of the institution or its facilities has been convicted for any activity that indicates a lack of business integrity (see paragraphs (b)(14) and (c)(3)(ii)(T) of this section).

(10) *Effect of State agency action.* The State agency's action must remain in effect during the administrative review. The effect of this requirement on particular State agency actions is as follows.

(i) *Overpayment demand.* During the period of the administrative review, the State agency is prohibited from taking action to collect or offset the overpayment. However, the State agency must assess interest beginning with the initial demand for remittance of the overpayment and continuing through the period of administrative review unless the administrative review official overturns the State agency's action.

(ii) *Recovery of advances.* During the administrative review, the State agency must continue its efforts to recover advances in excess of the claim for reimbursement for the applicable period. The recovery may be through a demand for full repayment or an adjustment of subsequent payments.

(iii) *Program payments.* The availability of Program payments during an administrative review of the denial of a new institution's application, denial of a renewing institution's application, proposed termination of a participating institution's agreement, and suspension of an institution are addressed in paragraphs (c)(1)(iii)(D), (c)(2)(iii)(D), (c)(3)(iii)(D), (c)(5)(i)(D), and (c)(5)(ii)(E), respectively, of this section.

(l) *Administrative reviews for day care homes.*

(1) *General.* The State agency must ensure that, when a sponsoring organization proposes to terminate its Program agreement with a day care home for cause, the day care home is provided an opportunity for an administrative review of the proposed termination. The State agency may do this either by electing to offer a State-level administrative review, or by electing to require the sponsoring organization to offer an administrative review. The State agency must notify the appropriate FNSRO of its election under this option, or any change it later makes under this option, by September 25, 2002 or within 30 days of any subsequent change under this option. The State agency must make the same election with regard to who offers the administrative review to any day care home in the Program in that State. The State agency or the sponsoring organization must develop procedures for offering and providing these administrative reviews, and these procedures must be consistent with this paragraph (l).

(2) *Actions subject to administrative review.* The State agency or sponsoring organization must offer an administrative review to a day care home that appeals a notice of intent to terminate their agreement for cause or a suspension of their participation (see §§ 226.16(l)(3)(iii) and (l)(4)(ii)).

(3) *Actions not subject to administrative review.* Neither the State agency nor the sponsoring organization is required to offer an administrative review for reasons other than those listed in paragraph (l)(2) of this section.

(4) *Provision of administrative review procedures to day care homes.* The administrative review procedures must be provided:

(i) Annually to all day care homes;

(ii) To a day care home when the sponsoring organization takes any action subject to an administrative review as described in paragraph (l)(2) of this section; and

(iii) Any other time upon request.

(5) *Procedures.* The State agency or sponsoring organization, as applicable (depending on the State agency's election pursuant to paragraph (l)(1) of this section) must follow the procedures in this paragraph (l)(5) when a day care home requests an administrative review of any action described in paragraph (l)(2) of this section.

(i) *Uniformity.* The same procedures must apply to all day care homes.

(ii) *Representation.* The day care home may retain legal counsel, or may be represented by another person.

(iii) *Review of record and opposition.* The day care home may review the record on which the decision was based and refute the action in writing. The administrative review official is not required to hold a hearing.

(iv) *Administrative review official.* The administrative review official must be independent and impartial. This means that, although the administrative review official may be an employee of the State agency or an employee or board member of the sponsoring organization, he/she must not have been involved in the action that is the subject of the administrative review or have a direct personal or financial interest in the outcome of the administrative review;

(v) *Basis for decision.* The administrative review official must make a determination based on the information provided by the sponsoring organization and the day care home and on Federal and State laws, regulations, polices, and procedures governing the Program.

(vi) *Time for issuing a decision.* The administrative review official must inform the sponsoring organization and the day care home of the administrative review's outcome within the period of time specified in the State agency's or sponsoring organization's administrative review procedures. This timeframe is an administrative requirement for the State agency or sponsoring organization and may not be used as a basis for overturning the termination if a decision is not made within the specified timeframe.

(vii) *Final decision.* The determination made by the administrative review official is the final administrative determination to be afforded the day care home.

(m) *Program assistance.*

(1) *General.* The State agency must provide technical and supervisory assistance to institutions and facilities to facilitate effective Program operations, monitor progress toward achieving Program goals, and ensure compliance with all requirements of title VI of the Civil Rights Act of 1964, title IX of the Education amendments of 1972, Section 504 of the Rehabilitation Act of 1973, the Age Discrimination Act of 1975, and the Department's regulations concerning nondiscrimination (7 CFR Parts 15, 15a, and 15b). The State agency must maintain documentation of supervisory assistance activities, including reviews conducted, corrective actions prescribed, and follow-up efforts.

(2) *Review priorities.* In choosing institutions for review, in accordance with paragraph (m)(4) of this section, the State agency must target for more frequent review institutions whose prior review included a finding of serious deficiency.

(3) *Review content.* Reviews must:

(i) Assess institutional compliance with the provisions of this part and with any applicable instructions of FNS and the Department;

(ii) Evaluate the documentation used by sponsoring organizations to classify their day care homes as tier I day care homes; and

(iii) Evaluate sponsoring organizations' implementation of serious deficiency and termination procedures and, if delegated to sponsoring organizations pursuant to paragraph (l)(1) of this section, the administrative review procedures for day care homes.

(4) *Review frequency.* The State agency must annually review 33.3 percent of all institutions. At least 15

percent of the total number of facility reviews required must be unannounced. The State agency must review institutions according to the following schedule:

(i) Independent centers and sponsoring organizations of 1–100 facilities must be reviewed at least once every three years. A review of a sponsoring organization must include 10 percent of its facilities;

(ii) Sponsoring organizations with more than 100 facilities must be reviewed at least once every two years. These reviews must include reviews of 5 percent of the first 1,000 facilities and 2.5 percent of the facilities in excess of 1,000; and

(iii) New institutions that are sponsoring organizations of five or more facilities must be reviewed within the first 90 days of Program operation.

* * * * *

(p) * * * The State agency must also include in this agreement its policy to restrict transfers of day care homes between sponsoring organizations. The policy must restrict the transfers to no more frequently than once per year, except under extenuating circumstances, such as termination of the sponsoring organization's agreement or other circumstances defined by the State agency. * * *

* * * * *

4. In § 226.7, paragraph (g) is amended by adding two new sentences after the second sentence to read as follows:

§ 226.7 State agency responsibilities for financial management.

* * * * *

(g) * * * For sponsoring organizations of centers, the State agency is prohibited from approving the sponsoring organization's administrative budget, or any amendments to the budget, if the administrative budget shows the Program will be charged for administrative costs in excess of 15 percent of the meal reimbursements estimated to be earned during the budget year. However, the State agency may waive this limit if the sponsoring organization provides justification that it requires Program funds in excess of 15 percent to pay its administrative costs and if the State agency is convinced that the institution will have adequate funding to provide meals meeting the requirements of § 226.20. * * *

* * * * *

§ 226.8 [Amended]

5. In § 226.8(g), the words ''in § 226.6(j) of this part'' are removed and the words ''in § 226.6(k)'' are added in their place.

6. In § 226.12, paragraph (b)(2)(i) is revised to read as follows:

§ 226.12 Administrative payments to sponsoring organizations for day care homes.

* * * * *

(b) * * *

(2) * * *

(i) Public status or tax exempt status under the Internal Revenue Code of 1986;

* * * * *

7. In § 226.14, paragraph (a) is amended by adding five new sentences after the second sentence to read as follows:

§ 226.14 Claims against institutions.

(a) * * * The State agency may permit institutions to pay overclaims over a period of one or more years. However, the State agency must assess interest beginning with the initial demand for remittance. Further, when an institution requests and is granted an administrative review of the State agency's overpayment demand, the State agency is prohibited from taking action to collect or offset the overpayment until the administrative review is concluded. The State agency must maintain searchable records of funds recovery activities. If the State agency determines that a sponsoring organization of centers has spent more than 15 percent of its meal reimbursements for a budget year for administrative costs (or more than any higher limit established pursuant to a waiver granted under § 226.6(f)(3)), the State agency must take appropriate fiscal action. * * *

* * * * *

8. In § 226.15:

a. Paragraph (a) is revised;

b. The heading and introductory text of paragraph (b) are revised;

c. The word ''and'' is removed at the end of paragraph (b)(5), the period at the end of paragraph (b)(6) is removed, and a semicolon is added in its place; and

b. New paragraphs (b)(7) through (b)(9) are added.

The revisions and additions specified above read as follows:

§ 226.15 Institution provisions.

(a) *Tax exempt status.* Except for proprietary title XIX and title XX centers, and sponsoring organizations of such centers, institutions must be public, or have tax exempt status under the Internal Revenue Code of 1986.

(b) *New applications and renewals.* Each institution must submit to the State agency with its application all information required for its approval as set forth in §§ 226.6(b) and 226.6(f). Such information must demonstrate that the institution has the administrative and financial capability to operate the Program in accordance with this part and with the performance standards set forth at § 226.6 (b)(18). The State agency must deny the application of any institution that does not demonstrate in its application that it is administratively and financially capable of operating the Program in accordance with this part, and may approve only those applicant institutions that meet the performance standards. No institution may submit an application if the institution or any of its principals is on the National disqualified list, and no sponsoring organization may submit an application on behalf of a facility if the facility or any of its principals is on the National disqualified list. At a minimum, such information must include:

* * * * *

(7) A list of the publicly funded programs in which the institution and its principals have participated in the past seven years and a certification that, during the preceding seven years, neither the institution nor any of its principals has been declared ineligible to participate in any publicly funded program by reason of violating that program's requirements. Instead of such a certification, the institution may submit documentation that the institution or the principal previously declared ineligible was later fully reinstated in, or determined eligible for, the program, including the payment of any debts owed;

(8) A statement certifying that neither the institution nor any of its principals has been convicted of any activity that occurred during the past seven years and that indicated a lack of business integrity. A lack of business integrity includes fraud, antitrust violations, embezzlement, theft, forgery, bribery, falsification or destruction of records, making false statements, receiving stolen property, making false claims, obstruction of justice, or any other activity indicating a lack of business integrity as defined by the State agency; and

(9) A statement certifying that all information on the application is true and correct, along with the name, mailing address, and date of birth of the institution's executive director and chairman of the board of directors.

* * * * *

9. In § 226.16:

a. The introductory text of paragraph (b) is amended by adding a new

sentence at the beginning of the paragraph;

b. Paragraph (b)(1) is revised;

c. Paragraph (b)(2) is amended by removing the word ''and'' at the end of the paragraph;

d. Paragraph (b)(3) is amended by removing the period at the end of the paragraph and adding in its place a semicolon;

e. New paragraphs (b)(4) through (b)(8) are added;

f. The introductory text of paragraph (d) is revised;

g. Paragraph (d)(4) is revised; and

h. A new paragraph (l) is added.

The additions and revisions specified above read as follows:

§ 226.16 Sponsoring organization provisions.

* * * * *

(b) A sponsoring organization is prohibited from submitting an application on behalf of a facility if either the facility or any of its principals is on the National disqualified list.

* * *

(1) A sponsoring organization management plan and administrative budget, in accordance with § 226.6(f)(2), which includes information sufficient to document the sponsoring organization's compliance with the performance standards set forth at § 226.6(b)(18). As part of its management plan, a sponsoring organization of day care homes must document that, to perform monitoring, it will employ the equivalent of one full-time staff person for each 50 to 150 day care homes it sponsors. As part of its monitoring plan, a sponsoring organization of centers must document that, to perform monitoring, it will employ the equivalent of one full-time staff person for each 25 to 150 centers it sponsors. It is the State agency's responsibility to determine the appropriate level of staffing for monitoring for each sponsoring organization, consistent with the specified ranges and the factors established by the State agency in accordance with § 226.6(f)(2). The monitoring staff equivalent may include the employee's time spent on scheduling, travel time, review time, follow-up activity, and report writing. Sponsoring organizations that are participating in the Program on July 29, 2002 must submit a management plan or plan amendment that meets the monitoring staffing requirement no later than July 29, 2003. For sponsoring organizations of centers, the portion of the administrative costs to be charged to the Program as shown on the administrative budget and the actual administrative costs charged to the Program may not exceed 15 percent of the meal reimbursements estimated or actually earned during the budget year, unless the State agency grants a waiver in accordance with § 226.6(f)(3). A sponsoring organization of centers must include in its administrative budget all administrative costs, whether incurred by the sponsoring organization or its sponsored centers. If at any point a sponsoring organization determines that the meal reimbursements estimated to be earned during the budget year will be lower than that estimated in its administrative budget, the sponsoring organization must amend its administrative budget to stay within the 15 percent limitation (or any higher limit established pursuant to a waived granted under § 226.6(f)(3)) or seek a waiver. Failure to do so will result in appropriate fiscal action in accordance with § 226.14(a).

* * * * *

(4) For sponsoring organizations applying for initial participation on or after June 20, 2000, if required by State law, regulation, or policy, a bond in the form prescribed by such law, regulation, or policy;

(5) A copy of the sponsoring organization's notice to parents, in a form and, to the maximum extent practicable, language easily understandable by the participant's parents or guardians. The notice must inform them of their facility's participation in CACFP, the Program's benefits, the name and telephone number of the sponsoring organization, and the name and telephone number of the State agency responsible for administration of CACFP;

(6) If the sponsoring organization chooses to establish procedures for determining a day care home seriously deficient that supplement the procedures in paragraph (l) of this section, a copy of those supplemental procedures. If the State agency has made the sponsoring organization responsible for the administrative review of a proposed termination of a day care home's agreement for cause, pursuant to § 226.6(l)(1), a copy of the sponsoring organization's administrative review procedures. The sponsoring organization's supplemental serious deficiency and administrative review procedures must comply with paragraph (l) of this section and § 226.6(l);

(7) A copy of their outside employment policy. The policy must restrict other employment by employees that interferes with an employee's performance of Program-related duties and responsibilities, including outside employment that constitutes a real or apparent conflict of interest; and

(8) For sponsoring organizations of day care homes, the name, mailing address, and date of birth of each provider.

* * * * *

(d) Each sponsoring organization must provide adequate supervisory and operational personnel for the effective management and monitoring of the program at all facilities it sponsors. Each sponsoring organization must employ monitoring staff sufficient to meet the requirements of paragraph (b)(1) of this section. At a minimum, Program assistance must include:

* * * * *

(4) Reviews of food service operations to assess compliance with meal pattern, recordkeeping, and other Program requirements.

(i) *Reviews of sponsored centers.* Reviews must be made at least three times each year at each center. In addition:

(A) At least two of the three reviews must be unannounced;

(B) At least one unannounced review must include observation of a meal service;

(C) At least one review must be made during the center's first six weeks of Program operation; and

(D) Not more than six months may elapse between reviews.

(ii) *Reviews of day care homes.* Reviews must be made at least three times each year at each day care home, except as described at paragraph (d)(4)(iii) of this section. In addition:

(A) At least two of the three reviews must be unannounced;

(B) At least one unannounced review must include observation of a meal service;

(C) At least one review must be made during the day care home's first four weeks of Program operation; and

(D) Not more than six months may elapse between reviews.

(iii) *Variation for sponsoring organizations of day care homes.* If the State agency believes that improved efficiency and more effective management will result, and subject to FNSRO approval, the State agency may allow a sponsoring organization to conduct reviews an *average* of at least three times each year per day care home, provided that:

(A) Each day care home receives at least two unannounced reviews;

(B) At least one review is made during each day care home's first four weeks of Program operations; and

(C) No more than six months elapse between reviews;

(iv) *Follow-up reviews.* If, in a review of a facility, a sponsoring organization detects one or more serious deficiency, the next review of that facility must be unannounced. Serious deficiencies are those set forth at paragraph (l)(2) of this section, regardless of the type of sponsored facility.

(v) *Notification.* Sponsoring organizations must provide each sponsored center written notification of the right of the sponsoring organization, the State agency, the Department, and other State and Federal officials to make announced or unannounced reviews of their operations during the center's normal hours of child or adult care operations, and must also notify sponsored centers that anyone making such reviews must show photo identification that demonstrates that they are employees of one of these entities. For sponsored centers participating July 29, 2002, the sponsoring organization must provide this notice sent no later than August 29, 2002. For sponsored centers that are approved after July 29, 2002, the sponsoring organization must provide the notice before meal service under the Program begins. Sponsoring organizations must provide day care homes notification of unannounced visits in accordance with § 226.18(b)(1).

(vi) *Other requirements pertaining to unannounced reviews.* Unannounced reviews must be made only during the facility's normal hours of child or adult care operations, and monitors making such reviews must show photo identification that demonstrates that they are employees of the sponsoring organization.

* * * * *

(l) *Termination of agreements for cause.* (1) *General.* The sponsoring organization must initiate action to terminate the agreement of a day care home for cause if the sponsoring organization determines the day care home has committed one or more serious deficiency listed in paragraph (l)(2) of this section.

(2) *List of serious deficiencies for day care homes.* Serious deficiencies for day care homes are:

(i) Submission of false information on the application;

(ii) Submission of false claims for reimbursement;

(iii) Simultaneous participation under more than one sponsoring organization;

(iv) Non-compliance with the Program meal pattern;

(v) Failure to keep required records;

(vi) Conduct or conditions that threaten the health or safety of a child(ren) in care, or the public health or safety;

(vii) A determination that the day care home has been convicted of any activity that occurred during the past seven years and that indicated a lack of business integrity. A lack of business integrity includes fraud, antitrust violations, embezzlement, theft, forgery, bribery, falsification or destruction of records, making false statements, receiving stolen property, making false claims, obstruction of justice, or any other activity indicating a lack of business integrity as defined by the State agency, or the concealment of such a conviction; or

(viii) Any other circumstance related to non-performance under the sponsoring organization-day care home agreement, as specified by the sponsoring organization or the State agency.

(3) *Serious deficiency notification procedures.* If the sponsoring organization determines that a day care home has committed one or more serious deficiency listed in paragraph (l)(2) of this section, the sponsoring organization must use the following procedures to provide the day care home notice of the serious deficiency(ies) and offer it an opportunity to take corrective action. However, if the serious deficiency(ies) constitutes an imminent threat to the health or safety of participants, or the day care home has engaged in activities that threaten the public health or safety, the sponsoring organization must follow the procedures in paragraph (l)(4) of this section instead of those in this paragraph (l)(3).

(i) *Notice of serious deficiency.* The sponsoring organization must notify the day care home that it has been found to be seriously deficient. The sponsoring organization must provide a copy of the serious deficiency notice to the State agency. The notice must specify:

(A) The serious deficiency(ies);

(B) The actions to be taken by the day care home to correct the serious deficiency(ies);

(C) The time allotted to correct the serious deficiency(ies) (as soon as possible, but not to exceed 30 days);

(D) That the serious deficiency determination is not subject to administrative review.

(E) That failure to fully and permanently correct the serious deficiency(ies) within the allotted time will result in the institution's proposed termination of the day care home's agreement and the proposed disqualification of the day care home and its principals; and

(F) That the day care home's voluntary termination of its agreement with the institution after having been notified that it is seriously deficient will still result in the day care home's formal termination by the State institution and placement of the day care home and its principals on the National disqualified list.

(ii) *Successful corrective action.* If the day care home corrects the serious deficiency(ies) within the allotted time and to the sponsoring organization's satisfaction, the sponsoring organization must notify the day care home that it has rescinded its determination of serious deficiency. The sponsoring organization must also provide a copy of the notice to the State agency.

(iii) *Proposed termination of agreement and proposed disqualification.* If timely corrective action is not taken to fully and permanently correct the serious deficiency(ies) cited, the sponsoring organization must issue a notice proposing to terminate the day care home's agreement for cause. The notice must explain the day care home's opportunity for an administrative review of the proposed termination in accordance with § 226.6(l). The sponsoring organization must provide a copy of the notice to the State agency. The notice must:

(A) Inform the day care home that it may continue to participate and receive Program reimbursement for eligible meals served until its administrative review is concluded;

(B) Inform the day care home that termination of the day care home's agreement will result in the day care home's termination for cause and disqualification; and

(C) State that if the day care home seeks to voluntarily terminate its agreement after receiving the notice of intent to terminate, the day care home will still be placed on the National disqualified list.

(iv) *Program payments.* The sponsoring organization must continue to pay any claims for reimbursement for eligible meals served until the serious deficiency(ies) is corrected or the day care home's agreement is terminated, including the period of any administrative review.

(v) *Agreement termination and disqualification.* The sponsoring organization must immediately terminate the day care home's agreement and disqualify the day care home when the administrative review official upholds the sponsoring organization's proposed termination and proposed disqualification, or when the day care home's opportunity to request an administrative review expires. At the same time the notice is issued, the sponsoring organization must provide a

copy of the termination and disqualification letter to the State agency.

(4) *Suspension of participation for day care homes.*

(i) *General.* If State or local health or licensing officials have cited a day care home for serious health or safety violations, the sponsoring organization must immediately suspend the home's CACFP participation prior to any formal action to revoke the home's licensure or approval. If the sponsoring organization determines that there is an imminent threat to the health or safety of participants at a day care home, or that the day care home has engaged in activities that threaten the public health or safety, and the licensing agency cannot make an immediate onsite visit, the sponsoring organization must immediately notify the appropriate State or local licensing and health authorities and take action that is consistent with the recommendations and requirements of those authorities. An imminent threat to the health or safety of participants and engaging in activities that threaten the public health or safety constitute serious deficiencies; however, the sponsoring organization must use the procedures in this paragraph (l)(4) (and not the procedures in paragraph (l)(3) of this section) to provide the day care home notice of the suspension of participation, serious deficiency, and proposed termination of the day care home's agreement.

(ii) *Notice of suspension, serious deficiency, and proposed termination.* The sponsoring organization must notify the day care home that its participation has been suspended, that the day care home has been determined seriously deficient, and that the sponsoring organization proposes to terminate the day care home's agreement for cause, and must provide a copy of the notice to the State agency. The notice must:

(A) Specify the serious deficiency(ies) found and the day care home's opportunity for an administrative review of the proposed termination in accordance with § 226.6(l);

(B) State that participation (including all Program payments) will remain suspended until the administrative review is concluded;

(C) Inform the day care home that if the administrative review official overturns the suspension, the day care home may claim reimbursement for eligible meals served during the suspension;

(D) Inform the day care home that termination of the day care home's agreement will result in the placement of the day care home on the National disqualified list; and

(E) State that if the day care home seeks to voluntarily terminate its agreement after receiving the notice of proposed termination, the day care home will still be terminated for cause and disqualified.

(iii) *Agreement termination and disqualification.* The sponsoring organization must immediately terminate the day care home's agreement and disqualify the day care home when the administrative review official upholds the sponsoring organization's proposed termination, or when the day care home's opportunity to request an administrative review expires.

(iv) *Program payments.* A sponsoring organization is prohibited from making any Program payments to a day care home that has been suspended until any administrative review of the proposed termination is completed. If the suspended day care home prevails in the administrative review of the proposed termination, the sponsoring organization must reimburse the day care home for eligible meals served during the suspension period.

10. In § 226.17:

a. Paragraph (b)(2) is amended by removing the comma and all text that follows the words ''the Internal Revenue Code of 1986'' and adding a period in its place; and

b. A new paragraph (d) is added.

The addition above reads as follows:

§ 226.17 Child care center provisions.

* * * * *

(d) If so instructed by its sponsoring organization, a sponsored center must distribute to parents a copy of the sponsoring organization's notice to parents.

11. In § 226.18:

a. A new sentence is added to the introductory text of paragraph (b) after the third sentence;

b. Paragraph (b)(1) is revised;

c. Remove the word ''and'' at the end of paragraph (b)(8);

d. Remove the period at the end of paragraphs (b)(9), (b)(10), (b)(11), and (b)(12) and add a semicolon in its place; and

e. New paragraphs (b)(13), (b)(14), (b)(15), and (b)(16) are added.

The revision and additions specified above read as follows:

§ 226.18 Day care home provisions.

* * * * *

(b) * * * The agreement must be signed by the sponsoring organization and the provider and must include the provider's full name, mailing address, and date of birth. * * *

(1) The right of the sponsoring organization, the State agency, the Department, and other State and Federal officials to make announced or unannounced reviews of the day care home's operations and to have access to its meal service and records during its normal hours of child care operations. For day care homes participating July 29, 2002, the sponsoring organization must amend the current agreement no later than August 29, 2002;

* * * * *

(13) The State agency's policy to restrict transfers of day care homes between sponsoring organizations;

(14) The responsibility of the day care home to notify their sponsoring organization in advance whenever they are planning to be out of their home during the meal service period. The agreement must also state that, if this procedure is not followed and an unannounced review is conducted when the children are not present in the day care home, claims for meals that would have been served during the unannounced review will be disallowed;

(15) The day care home's opportunity to request an administrative review if a sponsoring organization issues a notice of proposed termination of the day care home's Program agreement, or if a sponsoring organization suspends participation due to health and safety concerns, in accordance with § 226.6(1)(2); and

(16) If so instructed by its sponsoring organization, the day care home's responsibility to distribute to parents a copy of the sponsoring organization's notice to parents.

* * * * *

§ 226.19 [Amended]

12. In § 226.19, paragraph (b)(2) is amended by removing the comma and all text that follows the words ''the Internal Revenue Code of 1986'' and adding a period in its place.

§ 226.19a [Amended]

13. In § 226.19a, paragraph (b)(4) is amended by removing the comma and all text that follows the words ''the Internal Revenue Code of 1986'' and adding a period in its place.

§ 226.23 [Amended]

14. In § 226.23:

a. The introductory text of paragraph (h) is amended by removing the word ''four'' in the second sentence and adding in its place the word ''three'', and by removing the reference ''226.6(l)'' and adding the reference ''226.6(m)'' in their place.

b. Paragraph (h)(1) is amended by removing the words ''section 226.6(l) of this Part'' in the second sentence and

adding the words ''§ 226.6(m)'' in their place.

Dated: June 7, 2002.

Eric M. Bost,

Under Secretary for Food, Nutrition, and Consumer Services.

[FR Doc. 02–15776 Filed 6–26–02; 8:45 am]

BILLING CODE 3410–30–P

Federal Register

Thursday,
June 27, 2002

Part IV

Department of the Treasury

Bureau of Alcohol, Tobacco, and Firearms

27 CFR Part 7

Labeling and Advertising of Malt Beverages (2000R–107P); Proposed Rule

DEPARTMENT OF THE TREASURY

Bureau of Alcohol, Tobacco and Firearms

27 CFR Part 7

[Notice No. 946]

RIN 1512–AC10

Labeling and Advertising of Malt Beverages (2000R–107P)

AGENCY: Bureau of Alcohol, Tobacco and Firearms (ATF), Treasury.

ACTION: Notice of proposed rulemaking.

SUMMARY: This proposed rule revises the regulations regarding the labeling and advertising of malt beverages in accordance with plain language principles. These changes also incorporate minor technical amendments. There are no changes in requirements from the existing regulations. The Bureau of Alcohol, Tobacco and Firearms (ATF) is making this change in order to more clearly communicate the existing requirements. Because we are amending these regulations to conform to the plain language style, we are limiting comments to the effects of this change in the regulations' language. While we welcome comments on any aspect of these regulations, we will consider in this rulemaking only those comments that bear on the change in language.

DATES: We must receive your written comments not later than August 26, 2002.

ADDRESSES: You must send written comments to: Chief, Regulations Division, Notice No. 946, Bureau of Alcohol, Tobacco and Firearms, P.O. Box 50221, Washington, DC 20091–0221.

See also the heading entitled ''Public Participation—Submission of Comments'' in the **SUPPLEMENTARY INFORMATION** portion of this notice for information about submitting comments by FAX or by electronic mail.

Anyone may examine copies of written comments to this notice of proposed rulemaking, including comments submitted by FAX or by electronic mail. Comments will be available for public inspection during normal business hours at: ATF Reading Room, Room 6480, 650 Massachusetts Avenue NW., Washington, DC 20226; telephone 202–927–7890.

FOR FURTHER INFORMATION CONTACT: You may contact Charles N. Bacon, Program Manager, Bureau of Alcohol, Tobacco and Firearms, 10 Causeway Street, Room 701, Boston, MA 02222; telephone 617–557–1323.

SUPPLEMENTARY INFORMATION:

Public Participation—Submission of Comments

We request comments from all interested persons. We will carefully consider all comments we receive on or before August 26, 2002. We will give the same consideration to comments we receive after that date if it is practical to do so, but we give assurance of consideration only to comments we receive on or before the closing date.

Because we intend that this rulemaking revise only the style of language, and not the effect of the regulations, we solicit comments on that basis only. Accordingly, comments should be limited to the following questions: Does this language have the same effect as the old regulations? Does the plain language format effect the operation of the regulations? Is this new style helpful or useful? We will not consider in this rulemaking any comments that go beyond this scope.

Will ATF Treat My Comments as Confidential?

No. We will not recognize any material in comments as confidential. Your comments may be disclosed to the public. You should not include any material that you consider to be confidential or inappropriate for public disclosure. We may disclose the name of any person submitting a comment.

May I Submit a Comment by Facsimile Transmission?

Yes. You may submit comments by facsimile transmission to (202) 927–8602. Facsimile comments must meet these guidelines. They must:

1. Be legible when printed on 8½ x 11″ paper;

2. Contain the notice number and a written signature; and

3. Be three pages or less in length.

We will not accept FAX comments longer than three pages. We will not acknowledge receipt of FAX transmittals. We will treat facsimile comments as originals.

May I Submit Comments by Electronic Mail?

Yes. You may submit comments by electronic mail to *nprm@atfhq.atf.treas.gov* or through the ATF home page at *http://www.atf.treas.gov.* Electronic mail comments must include:

1. A reference to this document's ATF notice number;

2. Your e-mail address; and

3. Your name and post office address.

Background

This is a plain language revision of 27 CFR part 7, Labeling and Advertising of Malt Beverages. We issued the original requirements in part 7 after an opportunity for notice and comment in the rulemaking process. Since we are making only stylistic changes and minor technical amendments, we are limiting comments to the plain language issue in this proposed rule. As this revision adopts the plain language style, there is no change in the intent or effect of the regulations from the existing part 7. There are no changes to the authority, scope, or effect of the regulations. The authority for these requirements remains 27 U.S.C. 205.

Discussion

What Is ATF Doing About the Interim Regulation on Alcohol Content?

This revision combines the existing sections that concern alcohol content. We omit the old § 7.26, a section we suspended on April 19, 1993, in T.D. ATF–339. Instead, we simply state the current ''interim'' requirements found at § 7.71. The plain language requirements are in new §§ 7.100 through 7.108.

Why Is ATF Issuing Part 7 in Plain Language?

We intend for this revision to provide greater clarity to part 7. It is one of the first revisions of our regulations to adopt the plain language style. As one of the smaller parts in title 27, it is one that is more easily revised. This change gives us a plain language version to serve as a model for future revisions.

How Does This Revision Change Part 7?

There are no changes to the current requirements. There are no additions or deletions from regulatory provisions. However, we are amending part 7 in several ways.

We are expanding section headings, moving material from subordinate sections to main section numbers, reorganizing for easier reading, and simplifying language.

We are combining identical requirements for labeling and advertising. We had previously listed nearly identical requirements for labeling and advertisement in separate subparts. We are now combining similar requirements that apply to both labeling and advertising. Where requirements differ, we make those distinctions in separate sections.

We are stating requirements in a more logical, clearly identified order.

1. New subpart C lists requirements for labeling malt beverages.

2. New subpart D lists requirements for advertising malt beverages.

3. New subpart E lists prohibited practices for labeling and advertising of malt beverages.

To What Extent Does This Regulation Apply?

These regulations apply to the labeling and advertising of malt beverages to the extent that State law applies to these issues. Some States have adopted the Federal Alcohol Administration Act (FAA) requirements. Other States have different requirements, including:

Specific State alcohol beverage regulations,

General incorporation of the Federal rules as State rules, or

Other requirements, such as regulation of alcohol beverages as food.

If your State requires that you label your malt beverages, whether through a malt beverage-specific law, or through a more general law, such as a requirement to label as a food product, then these labeling regulations apply to you. Likewise, if your State consumer protection or unfair merchandise practices impose similar requirements on advertising malt beverages, then these advertising regulations apply to you.

Is My Internet Advertisement Covered by These Regulations?

Yes. If you are subject to part 7, your Internet advertisement is subject to these rules. The old part 7 makes it clear that any medium is covered. When these regulations were first issued in 1936, the Internet did not exist. This revision of part 7 makes it clear that the Internet is a covered medium.

How Can I Find a New Section From an "Old" Section in the Revised Part 7?

This chart is a cross-reference between the previous section numbers and the new section numbers:

CROSS REFERENCE TABLE—PREVIOUS PART 7 SECTIONS TO REVISED SECTIONS

Previous section	Revised section
7.1	7.1
7.2	7.2
7.3	7.15
7.3(a)	7.4
7.3(b)	7.5
7.4	7.6
7.10	7.10
7.20(a)	7.3
7.20(b)	7.8, 7.30
7.20(c)(1)	7.110
7.20(c)(1)	7.111
7.20(c)(2)	7.112

CROSS REFERENCE TABLE—PREVIOUS PART 7 SECTIONS TO REVISED SECTIONS—Continued

Previous section	Revised section
7.21	7.60
7.21(a)	7.61
7.21(b)	7.62
7.21(c)	7.63
7.22(a)	7.40
7.22(a)(3)	7.80
7.22(b)(1)	7.41
7.22(b)(2)	7.42
7.22(b)(3)	7.43
7.22(b)(4)	7.44
7.22(b)(5)	7.45
7.22(b)(6)	7.46
7.22(b)(7)	7.47
7.23(a)	7.50
7.23(b)	7.51
7.23(b)	7.52
7.23(c)	7.53
7.24(a)	7.70
7.24(b)	7.71
7.24(c)	7.72
7.24(d)	7.73
7.24(e)	7.74
7.24(f)	7.75
7.24(f)	7.77
7.24(f)	7.78
7.24(g)	7.76
7.24(h)	7.79
7.25(a)(1)	7.81
7.25(a)(2)	7.82
7.25(b)	7.83
7.25(c)	7.84
7.26	Omitted
7.27	7.90
7.27(a)	7.91
7.27(b)	7.91
7.27(c)	7.90
7.28(a)	7.31
7.28(b)(1)	7.33
7.28(b)(2)	7.33
7.28(b)(1)	7.32
7.28(c)	7.34
7.28(c)	7.35
7.28(c)	7.36
7.28(d)	7.37
7.28(e)	7.38
7.29(a)	7.300
7.29(a)(1)	7.301
7.29(a)(2)	7.302
7.29(a)(3)	7.303
7.29(a)(4)	7.304
7.29(a)(5)	7.305
7.29(a)(5)	7.306
7.29(a)(6)	7.320
7.29(a)(6)	7.321
7.29(b)	7.307
7.29(b)	7.308
7.29(c)	7.309
7.29(d)	7.310
7.29(d)	7.311
7.29(e)	7.312
7.29(f)	7.313
7.29(f)	7.314
7.29(g)	7.322
7.29(h)	7.323
7.30	7.3
7.31(a)	7.20
7.31(a)	7.21
7.31(b)	7.24
7.31(c)	7.25
7.31(d)	7.26

CROSS REFERENCE TABLE—PREVIOUS PART 7 SECTIONS TO REVISED SECTIONS—Continued

Previous section	Revised section
7.40	7.3
7.41(a)	7.20
7.41(a)	7.22
7.41(b)	7.26
7.42	7.23
7.50	7.3
7.50	7.200
7.50	7.201
7.51	7.11
7.51	7.12
7.51(a)	7.13
7.51(b)	7.14
7.52	7.210
7.52(a)	7.211
7.52(b)	7.212
7.52(c)	7.213
7.53(a)	7.220
7.53(b)	7.221
7.53(c)	7.222
7.53(d)	7.223
7.53(e)	7.224
7.54	7.300
7.54(a)(1)	7.301
7.54(a)(2)	7.302
7.54(a)(3)	7.303
7.54(a)(4)	7.304
7.54(a)(5)	7.305
7.54(a)(5)	7.306
7.54(a)(6)	7.307
7.54(a)(6)	7.308
7.54(a)(7)	7.309
7.54(b)(1)	7.330
7.54(b)(2)	7.331
7.54(c)(1)	7.313
7.54(c)(1)	7.314
7.54(c)(2)	7.332
7.54(c)(3)	7.333
7.54(d)(1)	7.334
7.54(d)(2)	7.335
7.54(e)	7.312
7.54(f)	7.336
7.54(g)	7.310
7.54(g)	7.311
7.54(h)	7.337
7.55(a)	7.340
7.55(b)(1)	7.350
7.55(b)(2)	7.351
7.55(b)(3)	7.353
7.60	7.9
7.71(a)	7.100
7.71(b)(1)	7.101
7.71(b)(2)	7.102
7.71(b)(3)	7.102
7.71(c)(1)	7.103
7.71(c)(2)	7.104
7.71(c)(3)	7.103
7.71(c)(3)	7.105
7.71(d)	7.106
7.71(e)	7.107
7.71(f)	7.108

How Can I Find an "Old" Section From the New Section in the Revised Part 7?

This chart shows the derivation of the new language from the old. It is a cross-reference between the revised section numbers and the previous section numbers.

DERIVATION REFERENCE TABLE—REVISED PART 7 SECTIONS TO PREVIOUS SECTIONS

Revised section	Previous section
Omitted	7.26
7.1	7.1
7.2	7.2
7.3	7.20(a), 7.30, 7.40, 7.50
7.4	7.3(a)
7.5	7.3(b)
7.6	7.4
7.7	Part 7 references to prior rulemaking decisions.
7.8	7.20(b)
7.9	7.60
7.10	7.10
7.11	7.51
7.12	7.51
7.13	7.51(a)
7.14	7.51(b)
7.15	7.3
7.20	7.31(a), 7.41(a)
7.21	7.31(a)
7.22	7.41(a)
7.23	7.42
7.24	7.31(b)
7.25	7.31(c)
7.26	7.31(d), 7.41(b)
7.30	7.30
7.31	7.28(a)
7.32	7.28(b)(1)
7.33	7.28(b)(1), 7.28(b)(2)
7.34	7.28(c)
7.35	7.28(c)
7.36	7.28(c)
7.37	7.28(d)
7.38	7.28(e)
7.40	7.22(a)
7.41	7.22(b)(1)
7.42	7.22(b)(2)
7.43	7.22(b)(3)
7.44	7.22(b)(4)
7.45	7.22(b)(5)
7.46	7.22(b)(6)
7.47	7.22(b)(7)
7.50	7.23(a)
7.51	7.23(b)
7.52	7.23(b)
7.53	7.23(c)
7.60	7.21
7.61	7.21(a)
7.62	7.21(b)
7.63	7.21(c)
7.70	7.24(a)
7.71	7.24(b)
7.72	7.24(c)
7.73	7.24(d)
7.74	7.24(e)
7.75	7.24(f)
7.76	7.24(g)
7.77	7.24(f)
7.78	7.24(f)
7.79	7.24(h)
7.80	7.22(a)(3)
7.81	7.25(a)(1)
7.82	7.25(a)(2)
7.83	7.25(b)

DERIVATION REFERENCE TABLE—REVISED PART 7 SECTIONS TO PREVIOUS SECTIONS—Continued

Revised section	Previous section
7.84	7.25(c)
7.90	7.27, 7.27(c)
7.91	7.27(a), 7.27(b)
7.100	7.71(a)
7.101	7.71(b)(1)
7.102	7.71(b)(2), 7.71(b)(3)
7.103	7.71(c)(1), 7.71(c)(3)
7.104	7.71(c)(2)
7.105	7.71(c)(3)
7.106	7.71(d)
7.107	7.71(e)
7.108	7.71(f)
7.110	7.20(c)(1)
7.111	7.20(c)(1)
7.112	7.20(c)(2)
7.200	7.50
7.201	7.50
7.210	7.52
7.211	7.52(a)
7.212	7.52(b)
7.213	7.52(c)
7.220	7.53(a)
7.221	7.53(b)
7.222	7.53(c)
7.223	7.53(d)
7.224	7.53(e)
7.300	7.29(a), 7.54
7.301	7.29(a)(1), 7.54(a)(1)
7.302	7.29(a)(2), 7.54(a)(2)
7.303	7.29(a)(3), 7.54(a)(3)
7.304	7.29(a)(4), 7.54(a)(4)
7.305	7.29(a)(5), 7.54(a)(5)
7.306	7.29(a)(5), 7.54(a)(5)
7.307	7.29(b), 7.54(a)(6)
7.308	7.29(b), 7.54(a)(6)
7.309	7.29(c), 7.54(a)(7)
7.310	7.29(d), 7.54(g)
7.311	7.29(d), 7.54(g)
7.312	7.29(e), 7.54(e)
7.313	7.29(f), 7.54(c)(1)
7.314	7.29(f), 7.54(c)(1)
7.320	7.29(a)(6)
7.321	7.29(a)(6)
7.322	7.29(g)
7.323	7.29(h)
7.330	7.54(b)(1)
7.331	7.54(b)(2)
7.332	7.54(c)(2)
7.333	7.54(c)(3)
7.334	7.54(d)(1)
7.335	7.54(d)(2)
7.336	7.54(f)
7.337	7.54(h)
7.340	7.55(a)
7.350	7.55(b)(1)
7.351	7.55(b)(2)
7.353	7.55(b)(3)

What Are the Technical Amendments ATF Is Making in This Rule?

We are making minor technical amendments to clarify the appropriate ATF officer who is responsible for certain actions. These changes incorporate references to the ''appropriate ATF officer'' and to ATF delegation orders. These changes are necessary to more effectively administer these rules with the continued prospect of organizational changes. We have frequently found that our regulatory requirements do not match our organizational alignment. Sometimes we have made several reorganizational changes before the regulations are changed to reflect the current responsibilities. In the case of these regulations, there are named ATF officials whose titles are more than 10 years outdated. It is not unusual for the rules to require actions by officers whose title or function has changed several times. By amending the rules to cite ''appropriate ATF officer'' we can then make the necessary changes more easily in an ATF delegation order that we make available through our Distribution Center and publish on our Internet website. This ATF order delegates specific responsibilities to the ''appropriate'' ATF officer. We express these requirements in a new § 7.15.

What Changes Is ATF Making for Cross-References to Previous Rulemaking Decisions?

We are moving cross-references for previous Treasury Decisions to a new § 7.7. This cross-reference facilitates future updates of this important research tool for those who need this information.

Paperwork Reduction Act

The provisions of the Paperwork Reduction Act of 1995, Public Law 104–13, 44 U.S.C. chapter 35, and its implementing regulations, 5 CFR part 1320, do not apply to this notice of proposed rulemaking because there are no new or revised recordkeeping or reporting requirements.

The Office of Management and Budget has previously approved the collections of information contained in this notice of proposed rulemaking, in accordance with the requirements of the Paperwork Reduction Act of 1980 or the Paperwork Reduction Act of 1995. The collection of information in this regulation is in the following sections:

INFORMATION COLLECTIONS IN PART 7

For the purpose of . . .	Old section	New section	OMB sontrol No.
Declaration of sulfites	§ 722.(b)(6)	§ 7.46	1512–0469

INFORMATION COLLECTIONS IN PART 7—Continued

For the purpose of . . .	Old section	New section	OMB sontrol No.
Name and address	§ 7.25	§§ 7.81–7.84	1512–0474

Regulatory Flexibility Act

The provisions of the Regulatory Flexibility Act (5 U.S.C. 601 *et seq.*) do not apply because this notice of proposed rulemaking will not have a significant economic impact on a substantial number of small entities. Any final rule published as a result of this notice will not impose, or otherwise cause, a significant increase in reporting, recordkeeping, or other compliance burdens on a substantial number of small entities.

We do not expect the final rule to have a significant secondary or incidental effect on a substantial number of small entities. Accordingly, we certify under the provisions of section 3 of the Regulatory Flexibility Act (5 U.S.C. 605(b)) that this notice will not have a significant economic impact on a substantial number of small entities.

Pursuant to section 7805(f) of the Internal Revenue Code of 1986, we have submitted this regulation to the Chief Counsel for Advocacy of the Small Business Administration for comment on its impact on small business.

Executive Order 12866

We determined that this rule is not a significant regulatory action because it will not:

1. Have an annual effect on the economy of $100 million or more or adversely affect in a material way the economy, a sector of the economy, productivity, competition, jobs, the environment, public health or safety, or State, local or tribal governments or communities;

2. Create a serious inconsistency or otherwise interfere with an action taken or planned by another agency;

3. Materially alter the budgetary impact of entitlements, grants, user fees, or loan programs or the rights and obligations of recipients thereof; or

4. Raise novel legal or policy issues arising out of legal mandates, the President's priorities, or the principles set forth in Executive Order 12866.

Drafting Information

The principal author of this document is William H. Foster, Regulations Division, Bureau of Alcohol, Tobacco and Firearms.

List of Subjects in 27 CFR Part 7

Advertising, Authority delegations, Beer, Consumer protection, Customs duties and inspection, Imports, Labeling, Packaging and Containers, Reporting and recordkeeping requirements.

Proposed Rule

For the reasons set forth in the preamble, we propose to amend title 27, Code of Federal Regulations, by revising part 7 in its entirety as follows:

PART 7—LABELING AND ADVERTISING OF MALT BEVERAGES

Par. 1. To incorporate the principles of plain language, revise part 7 to read as follows:

PART 7—LABELING AND ADVERTISING OF MALT BEVERAGES

Subpart A—What Is the Scope of The Regulations in This Part?

Sec.

7.1 What do the regulations in this part cover?
7.2 To which jurisdictions do the regulations in this part apply?
7.3 How does State law affect the regulations in this part?
7.4 What ATF Forms must I use?
7.5 Where do I get ATF Forms?
7.6 What other regulations apply?
7.7 Which Treasury Decisions preceded the revision of this part?
7.8 Who must comply with the regulations in this part?
7.9 Do these regulations apply to malt beverages I export in bond?

Subpart B—Definitions

7.10 What terms must I know to understand these regulations?
7.11 What is a malt beverage ''advertisement?'
7.12 What are examples of malt beverage advertisements?
7.13 Is my malt beverage label an advertisement?
7.14 Is a news article an advertisement?''
7.15 Who is the ''appropriate ATF officer'' for malt beverage labeling and advertising?

Subpart C—Labeling Requirements for Malt Beverages

Requirements for Certificates of Label Approval

7.20 When must I obtain a certificate of label approval from ATF for a domestic malt beverage?
7.21 When must I obtain a certificate of label approval from ATF for an imported malt beverage?
7.22 How do I obtain a certificate of label approval?
7.23 When must I exhibit a certificate of label approval?
7.24 Must imported malt beverage labels be identical to the label on the certificate of label approval?
7.25 What if my imported malt beverage labels do not conform to my certificate of label approval?
7.26 Where do I find the ATF procedures for certificates of label approval?

General Label Requirements

7.30 Why must I label my malt beverages?
7.31 Must I use a contrasting background?
7.32 What size of type is acceptable for the alcohol content statement?
7.33 What size of type is acceptable for mandatory information other than the alcohol content?
7.34 Is English required for the label?
7.35 May I make statements in foreign languages?
7.36 May I use Spanish for malt beverages destined for Puerto Rico?
7.37 How must I attach my labels to the containers?
7.38 May I state information that is not required?

Mandatory Label Information

7.40 What information is required on my brand label?
7.41 What additional information is required for an imported malt beverage?
7.42 What additional information is required for malt beverages I bottle or pack for another person?
7.43 Am I required to include the alcohol content?
7.44 How must I label my malt beverage made with FD&C Yellow No. 5?
7.45 How must I label my malt beverage if saccharin is present?
7.46 How must I label my malt beverage if it contains sulfites?
7.47 How must I label my malt beverage if it contains aspartame?

Brand Names

7.50 What is the brand name?
7.51 What is a misleading brand name?
7.52 How can I fix a misleading brand name?
7.53 Are certain trade or brand names of foreign origin exempt from § 7.51?

Misbranding

7.60 What is ''misbranding?''
7.61 What if my label doesn't have all the mandatory information?
7.62 On my cartons or cases may I use material that is prohibited on labels?

7.63 May I use containers that are permanently marked with someone else's name?

Class and Type

7.70 What is class and type?
7.71 What is the class for a reconstituted malt beverage?
7.72 What is ''half and half?''
7.73 What class designation may I use to label malt beverages with less than one-half of 1 percent alcohol by volume?
7.74 What rules apply to class for ale, porter, and stout?
7.75 What are the requirements for geographical names for distinctive types of malt beverages?
7.76 What is a generic geographical name for distinctive types of malt beverages?
7.77 What are examples of distinctive types of malt beverages with geographical names that are not generic?
7.78 How may I designate Pilsner beer that I produce in the United States?
7.79 How may I use a geographical name on other than a distinctive malt beverage type?

Name and Address

7.80 Where must I state my name and address?
7.81 What name and address is required for domestic malt beverages?
7.82 What name and address is acceptable if I pack or bottle for someone else?
7.83 What name and address is required for imported malt beverages?
7.84 What type of address must I state on my label?

Net Contents Statement

7.90 Where must I state the net contents of my container?
7.91 How must I state net contents?

Alcohol Content

7.100 When may I state the alcohol content of my malt beverage?
7.101 What measurement do I use to state alcohol content?
7.102 How do I state alcohol content?
7.103 What tolerance is permitted between actual alcohol content and the label statement of alcohol content?
7.104 What is the acceptable tolerance for ''low'' or ''reduced'' alcohol malt beverages?
7.105 What is the tolerance for a malt beverage I label with a ''0.0%'' alcohol content?
7.106 When may I use the terms ''low alcohol'' or ''reduced alcohol?''
7.107 When may I use the term ''non-alcoholic?''
7.108 When may I use the term ''alcohol free?''

Relabeling Malt Beverages

7.110 May I alter a malt beverage label already on the container?
7.111 May I relabel a malt beverage?
7.112 How do I get permission to relabel a malt beverage?

Subpart D—Advertising of Malt Beverages

7.200 Who must comply with these regulations?
7.201 Are there exceptions to advertising requirements?

Mandatory Advertising Statements

7.210 What statements are mandatory for malt beverage advertisements?
7.211 What information is required about the responsible advertiser?
7.212 What information is required for malt beverage class?
7.213 Is there any exception to mandatory information?

Legibility of Mandatory Information

7.220 What are the requirements for legibility of mandatory information?
7.221 What are the requirements for legibility on signs, billboards, or displays?
7.222 May I place mandatory information in a separate part of my advertisement?
7.223 May I combine mandatory information for more than one product?
7.224 How apparent must the mandatory information be to viewers?

Subpart E—Prohibited Practices for Labeling and Advertising

7.300 What is covered by these prohibitions?

Malt Beverage Labeling and Advertisements

7.301 You must not use false or misleading statements.
7.302 You must not disparage a competitor's products.
7.303 You must not use obscene or indecent material.
7.304 You must not use statements about testing and analyses that may mislead consumers.
7.305 You must not use misleading statements about guarantees.
7.306 You may use a statement for a money-back guarantee.
7.307 You must not mislead consumers as to government authority for your malt beverage processes.
7.308 You may use a municipal or State permit number.
7.309 You must not mislead consumers as to government supervision of your malt beverage business.
7.310 You must not use United States flags or other insignia.
7.311 You must not use flags or insignia in a misleading manner.
7.312 You must not use curative or therapeutic claims.
7.313 You must not use words that may mislead as to alcoholic strength.
7.314 What is not misleading as to alcoholic strength?

Additional Malt Beverage Labeling Practices

7.320 Your brand and trade names must not include misleading endorsements.
7.321 What is an acceptable brand or trade name labeling endorsement?
7.322 You must not use numerals that are misleading as to alcoholic content.
7.323 You must not use prohibited labeling statements on coverings, cartons, or cases.

Additional Malt Beverage Advertisement Practices

7.330 You must not use advertisement statements inconsistent with your malt beverage labeling.
7.331 You must not use an unapproved label in an advertisement.
7.332 You may depict an approved label with alcohol content in a malt beverage advertisement.
7.333 You may use an advertisement with an actual container showing an approved alcohol content label.
7.334 You must not use misleading class statements.
7.335 You must not use ale, porter, or stout designations in a misleading manner.
7.336 Your advertisement must not confuse brands.
7.337 You must not use deceptive advertising techniques.

Comparative Advertisements

7.340 May I use comparative advertising?

Taste Tests in Advertisements

7.350 May I use taste tests in malt beverage advertisements?
7.351 What scientific procedures must I use for taste tests?
7.352 Must I list the name and address of the taste test administrator?

Authority: 27 U.S.C. 205.

Subpart A—What Is the Scope Of The Regulations in This Part?

§ 7.1 What do the regulations in this part cover?

The regulations in this part relate to the labeling and advertising of malt beverages.

§ 7.2 To which jurisdictions do the regulations in this part apply?

This part applies to the States of the United States, the District of Columbia, and the Commonwealth of Puerto Rico.

§ 7.3 How does State law affect the regulations in this part?

These regulations apply to malt beverage labeling and advertising in interstate commerce only to the extent that State law imposes similar requirements on malt beverages that are exclusively intrastate. You must comply with these regulations to the extent that the State imposes similar requirements on malt beverages that you remove for consumption or sale only in that State.

§ 7.4 What ATF Forms must I use?

The Director prescribes all forms required by these regulations. Follow the instructions on each form and furnish all of the required information. If you fail to follow instructions or to provide the information that we require, you may not receive the service or benefit that you request. To comply with labeling regulations use: Application for and Certification/

Exemption of Label/Bottle Approval, ATF Form 5100.31.

§ 7.5 Where do I get ATF Forms?

You can download ATF forms from our website at www.atf.treas.gov. You may also request forms by mail from the ATF Distribution Center. The mailing address is: ATF Distribution Center, P.O. Box 5950, Springfield, VA 22150–5950.

§ 7.6 What other regulations apply?

You may find other related regulations in these parts of title 27, Code of Federal Regulations (27 CFR):

Part 1—Basic Permit Requirements Under the Federal Alcohol Administration Act.
Part 4—Labeling and Advertising of Wine.
Part 5—Labeling and Advertising of Distilled Spirits.
Part 13—Labeling Proceedings.
Part 16—Alcoholic Beverage Health Warning Statement.
Part 25—Beer.
Part 26—Liquors and Articles from Puerto Rico and the Virgin Islands.
Part 27—Importation of Distilled Spirits, Wines and Beer.
Part 71—Rules of Practice in Permit Proceedings.

§ 7.7 Which Treasury Decisions preceded the revision of this part?

We issued these Treasury Decisions in earlier rulemaking concerning malt beverage labeling and advertising:

Treasury decision (T.D.)	Federal Register citation	Date
6521	25 FR 13859	Dec. 29, 1960.
6672	28 FR 9637	Aug. 31, 1963.
	29 FR 3572	Mar. 20, 1964.
ATF–48	43 FR 13534	Mar. 31, 1978.
ATF–66	45 FR 40552	June 13, 1980.
ATF–92	46 FR 46912	Sept. 23, 1981.
ATF–94	46 FR 55097	Nov. 6, 1981.
ATF–180 ..	49 FR 61374	Aug. 8, 1984.
ATF–224 ..	51 FR 7673	Mar. 5, 1986.
ATF–225 ..	51 FR 8492	Mar. 12, 1986.
ATF–249 ..	52 FR 5956	Feb. 27, 1987.
ATF–280 ..	54 FR 3594	Jan. 25, 1989.
ATF–294 ..	55 FR 5421	Feb. 14, 1990.
ATF–339 ..	58 FR 21231	April 19, 1993.
ATF–344 ..	58 FR 40354	July 28, 1993.
ATF–372 ..	61 FR 20723	May 8, 1996.

§ 7.8 Who must comply with the regulations in this part?

You must mark, brand, or label your malt beverage containers and comply with these regulations if you are a malt beverage brewer, wholesaler, or importer, directly or indirectly, or through an affiliate, and you introduce malt beverages into interstate commerce, or you receive malt beverages in interstate or foreign commerce.

§ 7.9 Do these regulations apply to malt beverages I export in bond?

No, these regulations do not apply to malt beverages you export in bond.

Subpart B—Definitions

§ 7.10 What terms must I know to understand these regulations?

These terms have specific meanings for malt beverage labeling and advertising.

Act. The Federal Alcohol Administration Act.

Advertisement. See § 7.11.

Appropriate ATF officer. See § 7.15.

Brand label. The label carrying, in the usual distinctive design, the brand name of the malt beverage.

Bottler. Any person who places malt beverages in containers of a capacity of one gallon or less.

Certificate of label approval. An ATF Form, the Application for and Certification/Exemption of Label/Bottle Approval, ATF Form 5100.31.

Container. Any can, bottle, barrel, keg, or other closed receptacle, in any size or material, for the sale of malt beverages at retail.

Director. The Director, Bureau of Alcohol, Tobacco and Firearms, Department of the Treasury, Washington, DC.

Gallon. A U.S. gallon of 231 cubic inches at 39.1° F (4° C). All other liquid measures used are subdivisions of the gallon as defined.

Interstate or foreign commerce. Offering for sale, selling, shipping, delivering for sale or for shipment, removing from U.S. Customs custody, or otherwise introducing malt beverages into commerce between any State and any place outside the State, or between points within the same State but through any place outside the State, or commerce within the District of Columbia.

Malt beverage. A beverage made by the alcoholic fermentation of an infusion, decoction, or combination of both, in potable brewing water, of malted barley with hops, or their parts or products, and with or without:

(1) Other malted cereals,

(2) The addition of unmalted or prepared cereals,

(3) Other carbohydrates or carbohydrate products prepared,

(4) The addition of carbon dioxide, and

(5) Other wholesome products suitable for human food consumption.

Other terms. Any other term defined in the Federal Alcohol Administration Act and used in this part has the same meaning assigned to it by the Act.

Packer. Any person who places malt beverages in containers of a capacity in excess of one gallon.

Person. Any individual, partnership, joint-stock company, business trust, association, corporation, or other form of business enterprise, including a receiver trustee, or liquidating agent, and including an officer or employee of any agency of a State or political subdivision thereof.

State. Any State of the United States including the District of Columbia and the Commonwealth of Puerto Rico.

These regulations. Part 7, title 27, Code of Federal Regulations (27 CFR part 7).

United States: The several States, the District of Columbia, and the Commonwealth of Puerto Rico.

We. In these regulations ''we'' refers to the Bureau of Alcohol, Tobacco and Firearms.

You and I. ''You'' and ''I'' refer to the person who must comply with these regulations.

§ 7.11 What is a malt beverage ''advertisement?

A malt beverage ''advertisement'' includes any written, broadcast, or verbal statement, illustration, or depiction in any medium that is:

(a) In interstate or foreign commerce, or

(b) Calculated to induce sales in interstate or foreign commerce, or

(c) Disseminated by mail.

§ 7.12 What are examples of malt beverage advertisements?

This list does not include all forms of advertisement, but includes examples. ''Advertisement'' includes all material(s): written, printed, graphic, or any other media, including those in:

(a) Newspapers, magazines, trade booklets, menus, wine cards, leaflets, circulars, mailers, book inserts, catalogs, promotional materials, sales pamphlets, periodical literature, or similar publications;

(b) Matter accompanying malt beverage containers;

(c) Representations made on cases, in any billboard, sign, other outdoor advertisement, public transit card, or similar material;

(d) Radio or television broadcasts or Internet or other electronic communications;

(e) Any other media.

§ 7.13 Is my malt beverage label an advertisement?

No, labels on containers are not advertising under these regulations. However, you must comply with the labeling requirements of these regulations when you affix any label to

any malt beverage container, coverings, cartons, or cases of containers you use for sale at retail.

§ 7.14 Is a news article an advertisement?

No, we do not consider unpaid and unsolicited news material to be advertisements. For example, most articles, editorials, and news releases are not advertisements. We do, however, consider news material, articles, editorials, and news releases to be advertisements if you:

(a) Pay or promise to pay for the material, directly or indirectly, or

(b) Direct the material to be written.

§ 7.15 Who is the ''appropriate ATF officer'' for malt beverage labeling and advertising?

The ''appropriate ATF officer'' is the officer or employee of the Bureau of Alcohol, Tobacco and Firearms (ATF) who is authorized to perform the function that is required by a particular regulation. The Director delegates authorities in these regulations to certain ATF officers. You will find the specific ''appropriate ATF officer'' in the delegation order for part 7. As needed, we may periodically update the delegation order. On the effective date of this regulation the current delegation order is ATF O 1130.2A, Delegation Order '' Delegation of the Director's Authorities in 27 CFR Part 4, 5, and 7, Labeling and Advertising of Wine, Distilled Spirits, and Malt Beverages. You may obtain the current delegation order:

(a) By mail from: ATF Distribution Center, P.O. Box 5950, Springfield, Virginia 22150–5190; or

(b) By Internet at: *http://www.atf.treas.gov.*

Subpart C—Malt Beverage Labeling Requirements

Requirements for Certificates of Label Approval

§ 7.20 When must I obtain a certificate of label approval from ATF for a domestic malt beverage?

You must obtain a certificate of label approval from us if you:

(a) Bottle or pack malt beverages, or

(b) Remove malt beverages from the plant where they are bottled or packed.

§ 7.21 When must I obtain a certificate of label approval from ATF for an imported malt beverage?

You must obtain an approved certificate of label approval in order to obtain release of bottled imported malt beverages in containers from U.S. Customs custody. You must deposit the original or a copy of an approved certificate of label approval, ATF Form 5100.31, with the appropriate U.S. Customs officer at the port of entry.

§ 7.22 How do I obtain a certificate of label approval?

To obtain a certificate of label approval, you must submit an application to the appropriate ATF officer (see § 7.15) on Application for and Certification/Exemption of Label/Bottle Approval, ATF Form 5100.31. If we approve your label, we will issue your approved certificate to you.

§ 7.23 When must I exhibit a certificate of label approval?

You must exhibit your certificate of label approval upon the demand of any duly authorized representative of the United States Government or any duly authorized representative of a State or political subdivision of the State. You may exhibit an original or duplicate original of a certificate of label approval.

§ 7.24 Must imported malt beverage labels be identical to the label on the certificate of label approval?

Yes, except for certain permissible changes, your certificate of label approval must match the actual labels. You must present the original or copy of an approved certificate of label approval to obtain release from U.S. Customs custody. The certificate of label approval permits certain changes to labels. See the back of Certificate of Label Approval (ATF Form 5100.31) for details.

§ 7.25 What if my imported malt beverage labels do not conform to my certificate of label approval?

If the labels for your imported malt beverages in U.S. Customs custody do not conform to certificates of label approval issued by us, then you must relabel the malt beverages:

(a) Prior to release, and

(b) Under the supervision and direction of the U.S. Customs officers of the port at which the malt beverages are located.

§ 7.26 Where do I find the ATF procedures for certificates of label approval?

You will find the procedures regarding the issuance, denial, and revocation of certificates of label approval, as well as appeal procedures in part 13 of this chapter.

General Label Requirements

§ 7.30 Why must I label my malt beverage?

The Federal Alcohol Administration Act requires that, in compliance with these regulations, you must label, mark, and brand all malt beverages that you introduce into interstate or foreign commerce. For beverages that move only within a State, the Act requires you to take these actions to the extent that similar State law requires you to label, mark, and brand malt beverages.

§ 7.31 Must I use a contrasting background?

Yes. You must design your labels so that all statements required by these regulations are readily legible under ordinary conditions, and all such statements are on a contrasting background. This applies to all mandatory information under these regulations.

§ 7.32 What size of type is acceptable for the alcohol content statement?

You must state all portions of the alcohol content statement in the same size and kind of lettering and of equally conspicuous color. Unless State law requires otherwise, you must make the statement of alcohol content in script, type, or printing. Use a size of type in accordance with these requirements.

If the container is:	Then the size of the script, type, or printing of the alcohol content must be:
(a) 8 fluid ounces or less	Not smaller than 1 millimeter.
(b) More than 8 fl. oz	Not smaller than 2 millimeters.
(c) 40 fl. oz. or less	Not larger than 3 millimeters.
(d) Larger than 40 fl. oz	Not larger than 4 millimeters.

§ 7.33 What size of type is acceptable for mandatory information other than the alcohol content?

For mandatory information other than the alcohol content you must use a size of type in accordance with these requirements.

If . . .	Then the size of the script, type, or printing of all mandatory information must be:
(a) The mandatory information is stated among other descriptive or explanatory information.	More conspicuous than that of the descriptive or explanatory information that it appears with.
(b) The container is one-half pint or less	Not smaller than 1 millimeter.
(c) The container is more than one-half pint	Not smaller than 2 millimeters.

§ 7.34 Is English required for the label?

Yes, on malt beverage labels you must use the English language for all mandatory information other than the brand name.

§ 7.35 May I make statements in foreign languages?

Yes, you may make additional statements in foreign languages if the statements do not conflict with or contradict the requirements of these regulations.

§ 7.36 May I use Spanish for malt beverages destined for Puerto Rico?

Yes, you may use Spanish instead of English for malt beverage labels on containers you bottle or pack for consumption in Puerto Rico. If you use Spanish, you must also state the net contents in English.

§ 7.37 How must I attach my labels to the containers?

You must firmly affix labels. You must attach the labels to containers of malt beverages in such a way that they cannot be removed without a thorough application of water or other solvents.

§ 7.38 May I state information that is not required?

Yes, your labels may contain information other than the mandatory label information required by these regulations if the information:

(a) Complies with the requirements of these regulations, and

(b) Does not conflict with, or in any manner qualify, statements required by these regulations.

Mandatory Label Information

§ 7.40 What information is required on my brand label?

On your brand label you must state your:

(a) Brand name, in accordance with §§ 7.50 through 7.53,

(b) Class, in accordance with §§ 7.70 through 7.79,

(c) Name and address in accordance with §§ 7.80 through 7.84, and

(d) Net contents in accordance with § 7.90 through 7.91.

§ 7.41 What additional information is required for an imported malt beverage?

In the case of imported malt beverages, you must state the name and address of the importer on the brand label or on a separate front or back label in accordance with § 7.83.

§ 7.42 What additional information is required for malt beverages that I bottle or pack for another person?

If you bottle or pack malt beverages for a permit holder or retailer, you must include your name and address as the bottler or packer on the brand label or on a separate back or front label in accordance with § 7.82.

§ 7.43 Am I required to include the alcohol content?

If required by State law, you must list the alcohol content on the brand label or on a separate back or front label in accordance with §§ 7.100 through 7.108. Nothing in this section relieves you from complying with State law.

§ 7.44 How must I label a malt beverage made with FD&C Yellow No. 5?

If you use this coloring material, then you must include the statement: ''Contains FD&C Yellow No. 5.'' on the brand label or on a separate back or front label.

§ 7.45 How must I label my malt beverage if saccharin is present?

When saccharin is present in the finished product, you must include the following statement, separate and apart from all other information, on the brand label or a back or front label:

Use of this malt beverage may be hazardous to your health. This malt beverage contains saccharin which has been determined to cause cancer in laboratory animals.

§ 7.46 How must I label my malt beverage if it contains sulfites?

(a) Where sulfur dioxide or a sulfiting agent is detected at a level of 10 or more parts per million, measured as total sulfur dioxide, you must include one of these:

(1) ''Contains sulfites'' or

(2) ''Contains (a) sulfiting agent(s)'' or

(3) A statement identifying the specific sulfiting agent.

(b) The sulfite declaration may appear on a strip label or neck label instead of appearing on the front or back label.

(Approved by the Office of Management and Budget under Control No. 1512–0469.)

§ 7.47 How must I label my malt beverage if it contains aspartame?

(a) When the malt beverage contains aspartame you must include the following statement in accordance with Food and Drug Administration (FDA) regulations, in capital letters, separate and apart from all other information:

PHENYLKETONURICS: CONTAINS PHENYLALANINE

(b) This statement may appear on the brand label, or any front or back label.

Brand Names

§ 7.50 What is the brand name?

The ''brand name'' is the trade name you use when you sell your malt beverage. You must have a brand name for your malt beverage. If you do not develop a brand name to sell your malt beverage, then you must use your name as the brand name for the purpose of these regulations.

§ 7.51 What is a misleading brand name?

A brand name is misleading if it creates any erroneous impression or inference as to the age, origin, identity, or other characteristics of the malt beverage. We may find a brand name misleading by itself or in association with other printed or graphic matter. You must not use a misleading brand name.

§ 7.52 How can I fix a misleading brand name?

One way to fix a misleading brand name so that it does not convey an erroneous impression as to the age, origin, identity, or other characteristics of the malt beverage is to qualify your misleading brand name by adding the word ''brand.''

§ 7.53 Are certain trade or brand names of foreign origin exempt from § 7.51?

Some trade or brand names of foreign origin are exempt from the misleading prohibition in § 7.51. You may use a trade or brand name of foreign origin that meets these conditions:

(a) It was registered in the United States Patent Office on or before August 29, 1935;

(b) It was used by you or your predecessors in the United States for a period of at least 5 years immediately preceding August 29, 1935;

(c) The trade or brand name is qualified by the name of the location in the United States where you produce the malt beverage; and

(d) The qualification is as conspicuous as the trade name or brand.

Misbranding

§ 7.60 What is "misbranding?"

The Act provides that malt beverage containers must bear the labels required by these regulations. If your labels do not conform to these requirements then the law provides that your containers are misbranded.

§ 7.61 What if my label doesn't have all the mandatory information?

Your malt beverage is misbranded if the container does not have a brand label (or a brand label and other permitted labels) that:

(a) Contains the mandatory label information as required by §§ 7.40 through 7.47, and

(b) Conforms to the general requirements specified in these regulations.

§ 7.62 On my cartons or cases may I use material that is prohibited on labels?

No, your malt beverage is misbranded if you use any material intended for retail use that contains any statement, design, device, or graphic, pictorial, or emblematic representation that is prohibited by these regulations. Examples of materials include:

(a) Containers,

(b) Caps on containers,

(c) Labels on the containers, or any carton, case, or other covering of the container, and

(d) Any written, printed, graphic, or other matter accompanying the container to the consumer.

§ 7.63 May I use containers that are permanently marked with someone else's name?

No, your containers are misbranded if they are marked, branded, or burned with the name of a person other than the name required for the brand label.

Class and Type

§ 7.70 What is class and type?

You must state on your brand label the class of your malt beverage, and if desired, you may state the type of malt beverage. Class is a designation of malt beverage known to the trade, such as ''beer,'' ''ale,'' ''porter,'' ''stout,'' ''lager,'' or ''malt liquor.'' You may also further distinguish a malt beverage by using names known to the trade. If the malt beverage is not known to the trade under a particular designation, you must state a distinctive or fanciful name, together with an adequate and truthful statement of the composition of the malt beverage. We consider this statement to be a statement of class and type for the purposes of these regulations.

§ 7.71 What is the class for a reconstituted malt beverage?

Regulations permit you to reconstitute any malt beverage that you have concentrated by the removal of water. You may reconstitute the malt beverage only by the addition of water and carbon dioxide. You must label these reconstituted malt beverages in the same manner as malt beverages that have not been concentrated and reconstituted. However, you must show the class designation of these beverages in accordance with these conditions. You must:

(a) Show the statement: ''PRODUCED FROM _____ CONCENTRATE'' together with the class designation,

(b) Use the appropriate class designation in the blank, and

(c) Show all parts of the class designation in lettering of substantially the same size and kind.

§ 7.72 What is "half and half?'

You may designate a malt beverage as ''half and half'' only if it is composed of equal parts of two classes of malt beverages. You must conspicuously state the names of both together with the designation ''half and half.''

§ 7.73 What class designation may I use to label malt beverages with less than one-half of 1 percent alcohol by volume?

(a) For malt beverages containing less than one-half of 1 percent (0.5%) of alcohol by volume you must list the class as one of the following:

(1) ''Malt beverage,''

(2) ''Cereal beverage,'' or

(3) ''Near beer.'' If you use the designation ''near beer,'' both words must appear in the same size and style of type, in the same color of ink, and on the same color background.

(b) You must not use the class designations ''beer,'' ''lager beer,'' ''lager,'' ''ale,'' ''porter,'' or ''stout,'' or any other class or type designations that are commonly applied to malt beverages containing one-half of 1 percent (0.5%) or more of alcohol by volume.

§ 7.74 What rules apply to class for ale, porter, and stout?

You must not use ''ale,'' ''porter,'' or ''stout'' unless your malt beverage:

(a) Is fermented at comparatively high temperature,

(b) Possesses the characteristics generally attributed to ''ale,'' ''porter,'' or ''stout,'' and

(c) Is produced with no coloring or flavoring materials other than those recognized in standard brewing practices.

§ 7.75 What are the requirements for geographical names for distinctive types of malt beverages?

You may use geographical names for distinctive types of malt beverages only if:

(a) The malt beverage is produced in the particular region indicated by the name;

(b) We find under § 7.76 that the name is generic; or

(c) The malt beverage conforms to the designated type and together with the name, and in lettering equally visible as the name, there must appear:

(1) The word ''type,''

(2) The word ''American,'' or

(3) Some other statement indicating the true place of production.

§ 7.76 What is a generic geographical name for distinctive types of malt beverages?

A generic geographical name is one that by usage and common knowledge has lost its geographical significance as a place of origin for the product. We determine which geographical names are generic. An example of a generic geographical name is ''India Pale Ale.''

§ 7.77 What are examples of distinctive types of malt beverages with geographical names that are not generic?

These are examples of distinctive types of beer with geographical names that are not generic:

Dortmund, Dortmunder, Vienna, Wien, Wiener, Bavarian, Munich, Munchner, Salvator, Kulmbacher, Wurtzburger.

§ 7.78 How may I designate Pilsner beer that I produce in the United States?

You may designate beer you produce in the United States as ''Pilsen,'' ''Pilsener,'' or ''Pilsner'' without further modification if it conforms to that type.

§ 7.79 How may I use a geographical name on other than a distinctive malt beverage type?

(a) You may use geographical names that are not names for distinctive types of malt beverages if:

(1) The malt beverage is produced in the particular place or region indicated in the name; or

(2) We determine the brand name is not misleading as to origin of the malt beverage.

(b) If we find that your geographical name is misleading you must not use the name. One method to prevent a name from being misleading is to

qualify the geographical name by adding the word ''brand.''

Name and Address

(Approved by the Office of Management and Budget under control number 1512–0474)

§ 7.80 Where must I state my name and address?

You must state your name and address:

(a) On the brand label, or

(b) By blowing, branding, or burning it into the container.

§ 7.81 What name and address is required for domestic malt beverages?

On labels of containers of domestic malt beverages you must state your name as the bottler or packer and the place where you bottle or pack. You may show your principal place of business instead of the actual place where you bottle or pack if the address you show is a location where you also bottle or pack. We may disapprove your listing of a principal place of business if its use creates a false or misleading impression as to the geographic origin of the malt beverage.

§ 7.82 What name and address is acceptable if I pack or bottle for someone else?

If you bottle or pack malt beverages for another person you:

(a) Must state your name and address, and

(b) May state the name and address of the other person immediately after the words ''bottled for,'' ''distributed by,'' or some other similar appropriate phrase.

§ 7.83 What name and address is required for imported malt beverages?

If you are importing malt beverages as a permittee who is the importer, an exclusive agent, a sole distributor, or any other person responsible for the importation, then you:

(a) Must state on labels of containers of imported malt beverages the words ''imported by'' or a similar appropriate phrase followed immediately by the name of the importer and the importer's principal place of business in the United States, and

(b) May state the name and principal place of business of the foreign manufacturer, bottler, packer, or shipper. If State or foreign law requires the name and place of business, then they must appear on the label.

§ 7.84 What type of address must I state on my label?

(a) You must state your post-office address. You may omit your street address and use only your city and state.

(b) You may state additional addresses if:

(1) You are actively engaged in malt beverage business at the additional addresses, and

(2) You state, together with the additional address, an appropriate description of the business you conduct at that location.

Net Contents Statement

§ 7.90 Where must I state the net contents of my container?

You must state the net contents of your container on the brand label or by blowing, branding, or burning it into the container. You do not need to state the net contents on any label if you have the net contents blown, branded, or burned in the container in plainly legible characters, which are clear and not obscured in any way.

§ 7.91 How must I state net contents?

You must state net contents in accordance with this chart. Express fractions in their lowest denominations.

NET CONTENTS STATEMENTS

If your container is:	Then you must state net contents:
(a) Less than 1	in fluid ounces, or fractions of a pint.
(b) 1 pint	1 pint.
(c) More than 1 pint, but less than 1 quart	in fractions of a quart, or in pints and fluid ounces.
(d) 1 quart	1 quart.
(e) More than 1 quart, but less than 1 gallon	in fractions of a gallon, or in quarts, pints, and fluid ounces.
(f) 1 gallon	1 gallon.
(g) More than 1 gallon	in gallons and fractions of a gallon.

Alcohol Content

§ 7.100 When may I state the alcohol content of my malt beverage?

(a) You may state the alcohol content and the percentage and quantity of the original gravity or extract on a label. When you state alcohol content you must use:

(1) The statement required by these regulations, or

(2) If it is different, the manner of statement required under State law.

(b) Nothing in this section relieves you from complying with State law.

§ 7.101 What measurement do I use to state alcohol content?

You must state the alcohol content in percent of alcohol by volume. You must not use percent by weight, proof, ranges, or maximums or minimums.

§ 7.102 How do I state alcohol content?

State the alcohol content of your malt beverage in accordance with these requirements:

(a) You must use one of these options:

(1) ''Alcohol___ percent by volume,''

(2) ''Alcohol by volume ___ percent,''

(3) ''___ percent alcohol by volume,'' or

(4) ''___ percent alcohol/volume.''

(b) You may use these substitutions:

(1) ''Alc'' for alcohol,

(2) ''Vol'' for volume, and

(3) ''%'' for percent.

(c) State alcohol content as follows:

(1) If your malt beverage contains 0.5 percent alcohol by volume, you must state alcohol content to the nearest one tenth of a percent.

(2) If your malt beverage contains less than 0.5 percent alcohol by volume, you may state alcohol content in one hundredths of a percent.

§ 7.103 What tolerance is permitted between actual alcohol content and the label statement of alcohol content?

We accept these listed tolerances between the actual alcohol content of your malt beverage and the alcohol content you state on the label.

If your malt beverage:	An acceptable tolerance is:
(a) Contains 0.5 percent or more alcohol by volume.	any malt beverage you label as containing 0.5 percent or more alcohol by volume must not contain less than 0.5 percent alcohol by volume, regardless of any tolerance.
(b) Contains less than 0.5 percent alcohol by volume.	Otherwise, 0.3 percent, either above or below the stated percentage of alcohol. the actual alcoholic content must not exceed the labeled alcoholic content.

§ 7.104 What is the acceptable tolerance for ''low'' or ''reduced'' alcohol malt beverages?

For malt beverages which you label as ''low alcohol'' or ''reduced alcohol'' the actual alcohol content must not equal or exceed 2.5 percent alcohol by volume, regardless of any tolerance permitted by § 7.103.

§ 7.105 What is the tolerance for a malt beverage I label with ''0.0 %'' alcohol content?

There is no tolerance here. You may label a malt beverage with an alcoholic content of 0.0 percent alcohol by volume only if:

(a) You also label it as ''alcohol free,'' and

(b) It contains no alcohol.

§ 7.106 When may I use the terms ''low alcohol'' or ''reduced alcohol?'

You may use ''low alcohol'' or ''reduced alcohol'' only on malt beverages containing less than 2.5 percent alcohol by volume.

§ 7.107 When may I use the term ''non-alcoholic?''

You may use ''non-alcoholic'' on malt beverages only if you also use it together with the statement: ''contains less than 0.5 percent (or .5%) alcohol by volume.'' This statement must be in readily legible printing on a completely contrasting background.

§ 7.108 When may I use the term ''alcohol free?''

You may use ''alcohol free'' only on malt beverages containing no alcohol.

Relabeling Malt Beverages

§ 7.110 May I alter a malt beverage label already on the container?

No, the Act provides that it is unlawful to alter, mutilate, destroy, obliterate, or remove any mark, brand, or label on malt beverages you hold for sale in interstate or foreign commerce, or after shipment in interstate or foreign commerce, except as authorized by Federal law. You may relabel the malt beverage with prior permission from us.

§ 7.111 May I relabel a malt beverage?

You may obtain permission to add additional labeling or to relabel malt beverages in containers if additional labeling or relabeling is justified to comply with:

(a) These regulations, or

(b) Requirements of State law.

§ 7.112 How do I get permission to relabel a malt beverage?

You must file a written application for permission to relabel. File with the appropriate ATF officer (see § 7.15). You must submit:

(a) Two complete sets of the old labels,

(b) Two complete sets of any proposed labels, and

(c) A statement of the:

(1) Reasons for relabeling,

(2) Quantity and the location of the malt beverages, and

(3) Name and address of the person who will relabel.

Subpart D—Advertising of Malt beverages

§ 7.200 Who must comply with these regulations?

You must comply with these regulations if you are a malt beverage brewer, wholesaler, or importer and you publish or disseminate, or cause to be published or disseminated, any malt beverage advertisement, directly or indirectly, or through an affiliate.

§ 7.201 Are there exceptions to advertising requirements?

There are two exceptions to these requirements. These regulations do not apply to:

(a) Outdoor advertising in place on September 7, 1984: but the rules apply upon replacement, restoration, or renovation of that advertising; or

(b) The retailer, publisher, broadcaster, or provider of any advertising medium unless you are in business as a malt beverage brewer, wholesaler, bottler, or importer, directly or indirectly, or through an affiliate.

Mandatory Advertising Statements

§ 7.210 What statements are mandatory for malt beverage advertisements?

All malt beverage advertisements must comply with these regulations and state the:

(a) Responsible advertiser (see § 7.211), and

(b) Malt beverage class (see § 7.212).

§ 7.211 What information is required about the responsible advertiser?

The advertisement must state the name, city and state of the brewer, bottler, packer, wholesaler, or importer responsible for its publication, broadcast, or Internet content.

§ 7.212 What information is required for malt beverage class?

The advertisement must contain a conspicuous statement of the class to which the malt beverage belongs, corresponding to the statement of class these regulations require to appear on the label of the product. (See §§ 7.70–7.79)

§ 7.213 Is there any exception to mandatory information?

Yes, there are these exceptions to mandatory information.

When your advertisement:	You may:
(a) Refers to: A general malt beverage line, or all of the malt beverage products of one company, whether by the company name or by the brand name common to all the malt beverages in the line.	state only the name and address of the responsible advertiser.
(b) Refers to only one type of malt beverage marketed under the specific brand name.	not use the exception. State the name and address of the responsible advertiser and the class.
(c) Is on consumer specialty items	state only: (1) the company name, or (2) brand name of the product.

Legibility of Mandatory Information

§ 7.220 What are the requirements for legibility of mandatory information?

In any written, printed, or graphic advertisement, all statements you make to comply with these regulations must be in lettering or type size sufficient to be conspicuous and readily legible.

§ 7.221 What are the requirements for legibility on signs, billboards, or displays?

In the case of signs, billboards, or displays your name and address may appear in type size or lettering smaller than the other mandatory information, provided that the information is legible upon closer examination of the sign or billboard.

§ 7.222 May I place mandatory information in a separate part of my advertisement?

No, you must clearly state mandatory information as a part of the advertisement. You must not separate mandatory information in any manner from the remainder of the advertisement.

§ 7.223 May I combine mandatory information for more than one product?

No, you must clearly separate statements of mandatory information for two or more products.

§ 7.224 How apparent must the mandatory information be to viewers?

You must state mandatory information in print, electronic and audiovisual media so that it is readily apparent to the persons viewing the advertisement.

Subpart E—Prohibited Practices For Labeling and Advertising

§ 7.300 What is covered by these prohibitions?

These prohibitions may apply to:

(a) The use for sale to the consumer of:

(1) Containers of malt beverages,

(2) Labels on malt beverage containers,

(3) Labels on shipping containers,

(4) Cartons, cases, or individual coverings of malt beverage containers, and

(5) Written, printed, graphic, or other matter accompanying malt beverage containers.

(b) Malt beverage advertisements.

Malt Beverage Labeling and Advertisements

§ 7.301 You must not use false or misleading statements.

For malt beverage labels and advertisements you must not use any statement that:

(a) Is false or untrue in any particular, or

(b) Tends to create a misleading consumer impression, whether or not the statement is true or false, either directly, by ambiguity, omission, inference, or by addition of irrelevant, scientific or technical matter.

§ 7.302 You must not disparage a competitor's products.

Your malt beverage labels and advertisements must not disparage a competitor's products.

§ 7.303 You must not use obscene or indecent material.

You must not use labels and advertisements with any statement, design, device, or representation that is obscene or indecent.

§ 7.304 You must not use statements about testing and analyses that may mislead consumers.

You must not use any statement, design, device, or representation relating to analyses, standards, or tests, whether these are true or false, that is likely to mislead the consumer.

§ 7.305 You must not use misleading statements about guarantees.

You must not use any statement, design, device, or representation relating to any guarantee, whether these are true or false, that is likely to mislead the consumer.

§ 7.306 You may use a statement for a money-back guarantee.

Malt beverage labels and advertisements may include money-back guarantee statements.

§ 7.307 You must not mislead consumers as to government authority for your malt beverage processes.

You must not use statements that may mislead consumers to believe that your malt beverage is manufactured or processed under any government authority.

(a) Such statements include:

(1) Simulations of government stamps,

(2) Designs that resemble or simulate a stamp of the United States Government or of any State or foreign government, and

(3) Any statement that your malt beverage is brewed, made, bottled, packed, labeled, or sold under, or in accordance with, any municipal, State, Federal, or foreign government authorization, law, or regulation.

(b) Your label may include:

(1) A stamp authorized or required by the United States Government or any State or foreign government,

(2) A statement that is required or specifically authorized by Federal, State, or municipal, law or regulation, and

(3) A statement that is required or specifically authorized by the laws or regulations of the foreign country where the malt beverage is produced.

§ 7.308 You may use a municipal or State permit number.

If you display a municipal or State permit number on your label or in advertisement, you may not use any additional statement to accompany the permit number, except that you may use an additional statement that is required by State law.

§ 7.309 You must not mislead consumers as to government supervision of your malt beverage business.

You must not use malt beverage labels or advertisements with statements that imply governmental supervision over production, bottling, or packing of malt beverages. Examples of these statements include:

(a) ''Bonded''

(b) ''Bottled in bond''

(c) ''Aged in bond''

(d) ''Bonded age''

(e) ''Bottled under customs supervision,'' or

(f) Phrases containing these or synonymous terms.

§ 7.310 You must not use United States flags or other insignia.

You must not use malt beverage labels or advertisements that contain any statement, design, device, or pictorial representation that relate, directly or indirectly, to:

(a) The armed forces of the United States,

(b) The United States flag, or

(c) Any emblem, seal, insignia, or decoration associated with the United States flag or armed forces.

§ 7.311 You must not use flags or insignia in a misleading manner.

You must not use malt beverage labels or advertisements that contain misleading flags or insignia. Examples include: flags, statements, designs, devices, seals, coats of arms, crests, other insignia, or pictorial representations of these. Such labels or advertisements are misleading if a consumer may falsely believe the malt beverage is:

(a) Endorsed by,

(b) Made by,

(c) Used by,

(d) Produced by,

(e) Produced under the supervision of, or

(f) Made in accordance with the specifications of the person whom the flag or insignia represents.

§ 7.312 You must not use curative and therapeutic claims.

You must not use malt beverage labels or advertisements with misleading curative or therapeutic claims. Examples include any statements, designs, representations, pictorial representations, or devices that represent malt beverage consumption as having curative or therapeutic effects. The claims are misleading if they:

(a) Are untrue in any way, or

(b) Tend to create a misleading impression.

§ 7.313 You must not use words that may mislead as to alcoholic strength.

Your labels and advertisements must not use words that are misleading as to the alcoholic strength of your malt beverage. You must not use misleading numerals, letters, characters, figures, or similar words or statements. For example, you must not use these terms:

(a) ''Strong,''

(b) ''Full strength,''

(c) ''Extra strength,''

(d) ''High test,''

(e) ''High proof,''

(f) ''Pre-war strength,'' or

(g) ''Full old-time alcoholic strength.''

§ 7.314 What is not misleading as to alcoholic strength?

You may use words or statements of alcoholic strength or alcohol content under these conditions.

(a) If State law requires you to include alcoholic strength or content statements on your labels or in your advertisements.

(b) You may use the terms ''low alcohol,'' ''reduced alcohol,'' ''non-alcoholic,'' and ''alcohol-free,'' in accordance with §§ 7.106, 7.107, and 7.108.

(c) You may use a malt beverage alcohol content statement in accordance with §§ 7.100 through 7.108.

Additional Malt Beverage Labeling Practices

§ 7.320 Your brand and trade names must not include misleading endorsements.

You must not use a brand or trade name that is misleading. Brand or trade names are misleading if:

(a) You use the name of:

(1) Any living individual of public prominence,

(2) An existing private or public organization,

(3) A name that is a simulation or an abbreviation of a living individual or organization, or

(4) Any graphic, pictorial, or emblematic representation of these individuals or organizations; and

(b) The use of the name is likely to mislead a consumer to falsely believe the individual or organization:

(1) Endorses,

(2) Uses,

(3) Produces,

(4) Supervises production of, or

(5) Gives specifications to produce the malt beverage.

§ 7.321 What is an acceptable brand or trade name labeling endorsement?

Brand or trade names are not misleading if you use the name of any person in business as a malt beverage producer, importer, bottler, packer, wholesaler, retailer, or warehouseman. You may also use the name of any living individual of public prominence, or an existing private or public organization, provided that you or your predecessors used the trade or brand name prior to August 29, 1935.

§ 7.322 You must not use numerals that are misleading as to alcoholic content.

Your malt beverage labels must not contain statements that consumers may consider as statements of alcoholic content. Examples include: statements, designs, or devices, whether in the form of numerals, letters, characters, figures, or otherwise. However, you may use statements as required by State law, or as permitted by §§ 7.100 through 7.108.

§ 7.323 You must not use prohibited labeling statements on coverings, cartons, or cases.

For retail packaging and other materials you may use statements and graphics that are allowed by these regulations. You must not use any statements, graphic pictorials, emblematic representations, or other matter, that are prohibited on labels or containers. For malt beverages these prohibitions apply to:

(a) Individual coverings,

(b) Cartons,

(c) Cases,

(d) Other container wrappers, and

(e) Any written, printed, graphic, or other matter accompanying the container.

Additional Malt Beverage Advertisement Practices

§ 7.330 You must not use advertisement statements inconsistent with your malt beverage labeling.

You must not use malt beverage advertisement statements that are inconsistent with your labeling statements.

§ 7.331 You must not use an unapproved label in an advertisement.

Any label you depict on a bottle in an advertisement must be a reproduction of an approved label.

§ 7.332 You may depict an approved label with alcohol content in a malt beverage advertisement.

In any advertising media you may depict an approved malt beverage label that bears a statement of alcoholic content permitted under §§ 7.100 through 7.108. The statement of alcohol content on the label must not appear more prominently in the advertisement than it does on the approved label.

§ 7.333 You may use an advertisement with an actual container showing an approved alcohol content label.

In any advertising media you may display an actual malt beverage container showing the approved label bearing a statement of alcohol content permitted under §§ 7.100 through 7.108.

§ 7.334 You must not use misleading class statements.

Your advertisements must not use misleading statements as to the class of your malt beverage. If your malt beverage contains less than one-half of 1 percent alcohol by volume you must not use:

(a) ''Beer,''

(b) ''Lager beer,''

(c) ''Lager,''

(d) ''Ale,''

(e) ''Porter''

(f) ''Stout,'' or

(g) Any other class or type designation commonly applied to fermented malt beverages containing one-half of 1 percent or more alcohol by volume.

§ 7.335 You must not use ''ale,'' ''porter,'' or ''stout'' designations in a misleading manner.

Your advertisements may use designations for ''ale,'' ''porter,'' or ''stout'' only when your malt beverage:

(a) Is fermented at a comparatively high temperature,

(b) Possesses the characteristics generally attributed to ''ale,'' ''porter,'' or ''stout,'' and

(c) Is produced without the use of coloring or flavoring materials other than those recognized in standard brewing practices.

§ 7.336 Your advertisement must not confuse brands.

Your advertisement must not lead to brand confusion.

(a) This provision applies to your representations in:

(1) One advertisement,

(2) Two or more advertisements in one issue of a periodical or newspaper, and

(3) One piece of other written, printed, or graphic matter.

(b) You must not advertise two or more different malt beverage brands if any of the following occur:

(1) The advertisement tends to create an impression that representations you make for one brand applies to the another brand;

(2) The representations are contrary to any provision of the regulations in this part; or

(3) The representations are in any respect untrue.

§ 7.337 You must not use deceptive advertising techniques.

You must not use malt beverage advertisements that use subliminal or similar advertising techniques. These prohibited advertisements include: the use of any device or technique that conveys, or attempts to convey, a message to a person by means of images or sounds of a very brief nature that cannot be perceived at a normal level of awareness.

Comparative Advertisements

§ 7.340 May I use comparative advertising?

Yes, you may use comparative advertising that is not disparaging of a competitor's product.

Taste Tests in Advertisements

§ 7.350 May I use taste tests in malt beverage advertisements?

Yes, you may use taste test results in advertisements comparing competitors' products unless they are disparaging, deceptive, or likely to mislead the consumer.

§ 7.351 What scientific procedures must I use for taste tests?

You must use a taste test procedure that meets scientifically accepted procedures. An example of a scientifically accepted procedure is outlined in the Manual on Sensory Testing Methods, ASTM Special Technical Publication 434, published by the American Society for Testing and Materials, 1916 Race Street, Philadelphia, Pennsylvania 19103, ASTM, 1968, Library of Congress Catalog Card Number 68–15545.

§ 7.352 Must I list the name and address of the taste test administrator?

Yes, if you use a taste test in your advertisement, you must also make a statement in the advertisement providing the name and address of the taste test administrator.

Signed: August 17, 2001.

Bradley A. Buckles,

Director.

Approved: May 14, 2002.

Timothy E. Skud,

Deputy Assistant Secretary (Regulatory, Tariff and Trade Enforcement).

[FR Doc. 02–16026 Filed 6–26–02; 8:45 am]

BILLING CODE 4810–31–P

Federal Register

Thursday,
June 27, 2002

Part V

Department of Defense
General Services Administration
National Aeronautics and Space Administration

48 CFR Chapter 1, et al.

Federal Acquisition Circular 2001–08; Final Rule

DEPARTMENT OF DEFENSE

GENERAL SERVICES ADMINISTRATION

NATIONAL AERONAUTICS AND SPACE ADMINISTRATION

48 CFR Chapter 1

Federal Acquisition Circular 2001–08; Introduction

AGENCIES: Department of Defense (DoD), General Services Administration (GSA), and National Aeronautics and Space Administration (NASA).

ACTION: Summary presentation of final rules, and technical amendments and corrections.

SUMMARY: This document summarizes the Federal Acquisition Regulation (FAR) rules agreed to by the Civilian Agency Acquisition Council and the Defense Acquisition Regulations Council in this Federal Acquisition Circular (FAC) 2001–08. A companion document, the Small Entity Compliance Guide (SECG), follows this FAC. The FAC, including the SECG, is available via the Internet at *http://www.arnet.gov/far.*

DATES: For effective dates and comment dates, see separate documents which follow.

FOR FURTHER INFORMATION CONTACT: The FAR Secretariat, Room 4035, GS Building, Washington, DC 20405, (202) 501–4755, for information pertaining to status or publication schedules. For clarification of content, contact the analyst whose name appears in the table below in relation to each FAR case or subject area. Please cite FAC 2001–08 and specific FAR case number(s). Interested parties may also visit our website at *http://www.arnet.gov/far.*

Item	Subject	FAR case	Analyst
I	Definition of ''Claim'' and Terms Relating to Termination	2000–406	Klein.
II	Federal Supply Schedule Order Disputes and Incidental Items	1999–614	Nelson.
III	Relocation Costs	1997–032	Olson.
IV	Technical Amendments		

SUPPLEMENTARY INFORMATION: Summaries for each FAR rule follow. For the actual revisions and/or amendments to these FAR cases, refer to the specific item number and subject set forth in the documents following these item summaries.

FAC 2001–08 amends the FAR as specified below:

Item I—Definition of ''Claim'' and Terms Relating to Termination (FAR Case 2000–406)

The purpose of this final rule is to clarify the applicability of definitions, eliminate redundant or conflicting definitions, and streamline the process for locating definitions. This rule is not intended to change the meaning of any FAR text or clause. Movement of various definitions to FAR 2.101 is not intended to change the operation of the cost principles and, specifically, the movement of the definition of ''claim'' to FAR 2.101 is not intended to change the scope or context of FAR 31.205–47(f)(1).

This final rule—

- Revises and moves the definitions of ''claim'' from FAR 33.201; ''continued portion of the contract,'' ''partial termination,'' ''terminated portion of the contract'' from FAR 49.001; and ''termination for convenience'' from FAR 17.103;
- Adds a definition of ''termination for default'' at FAR 2.101 and a new paragraph (d) at FAR 17.104 that explains the distinction between ''termination for convenience'' and ''cancellation'' that was deleted from the definition of ''termination for convenience'' that was moved from FAR 17.103;
- Revises FAR 33.213(a) to clarify the distinction between claims ''arising under a contract'' and claims ''relating to a contract''
- Revises the definition of ''claim'' in the FAR clause at 52.233–1 to conform to the definition at FAR 2.101; and
- Makes other editorial revisions for clarity.

Item II—Federal Supply Schedule Order Disputes and Incidental Items (FAR Case 1999–614)

This final rule amends the FAR to add policies on disputes and incidental items under Federal Supply Schedule contracts and to remove the requirement to notify GSA when a schedule contractor refuses to honor an order placed by a Government contractor. This rule affects all ordering offices acquiring supplies or services subject to the procedures of FAR Subpart 8.4.

Item III—Relocation Costs (FAR Case 1997–032)

This final rule amends the relocation cost principle at FAR 31.205–35. The rule will only affect contracting officers that price contracts using cost analysis, or that are required by a contract clause to use cost principles for the determination, negotiation, or allowance of costs.

The relocation cost principle addresses the allowability of costs incurred by an existing contractor employee incident to the permanent change of the employee's assigned work location for a period of 12 months or more, or upon recruitment of a new employee. The final rule revises the cost principle by making allowable payments for spouse employment assistance and for increased employee income and Federal Insurance Contributions Act taxes incident to allowable reimbursed relocation costs, increasing the ceiling for allowance of miscellaneous costs of relocation, and making a number of editorial changes.

Item IV—Technical Amendments

These amendments update sections and make editorial changes at FAR 52.202–1, 52.212–3, and 52.225–11.

Dated: June 19, 2002.

Al Matera,

Director, Acquisition Policy Division.

Federal Acquisition Circular

Federal Acquisition Circular (FAC) 2001–08 is issued under the authority of the Secretary of Defense, the Administrator of General Services, and the Administrator for the National Aeronautics and Space Administration.

Unless otherwise specified, all Federal Acquisition Regulation (FAR) and other directive material contained in FAC 2001–08 are effective July 24, 2002.

Dated: June 18, 2002.

Deidre A. Lee,

Director, Defense Procurement.

Dated: June 10, 2002.

David A. Drabkin,

Deputy Associate Administrator, Office of Acquisition Policy, General Services Administration.

Dated: June 10, 2002.

Tom Luedtke,

Assistant Administrator for Procurement, National Aeronautics and Space Administration.

[FR Doc. 02–15939 Filed 6–26–02; 8:45 am]

BILLING CODE 6820–EP–P

DEPARTMENT OF DEFENSE

GENERAL SERVICES ADMINISTRATION

NATIONAL AERONAUTICS AND SPACE ADMINISTRATION

48 CFR Parts 2, 17, 31, 33, 49, and 52

[FAC 2001–08; FAR Case 2000–406; Item I]

RIN 9000–AJ19

Federal Acquisition Regulation; Definition of ''Claim'' and Terms Relating to Termination

AGENCIES: Department of Defense (DoD), General Services Administration (GSA), and National Aeronautics and Space Administration (NASA).

ACTION: Final rule.

SUMMARY: The Civilian Agency Acquisition Council and the Defense Acquisition Regulations Council (Councils) have agreed on a final rule amending the Federal Acquisition Regulation (FAR) to clarify and move the definitions of ''claim'' and certain terms relating to termination to the FAR part regarding definitions.

DATES: *Effective Date:* July 29, 2002.

FOR FURTHER INFORMATION CONTACT: The FAR Secretariat, Room 4035, GS Building, Washington, DC, 20405, (202) 501–4755, for information pertaining to status or publication schedules. For clarification of content, contact Ms. Linda Klein, Procurement Analyst, at (202) 501–3775. Please cite FAC 2001–08, FAR case 2000–406.

SUPPLEMENTARY INFORMATION:

A. Background

The purpose of this rule is to clarify the applicability of definitions, eliminate redundant or conflicting definitions, and streamline the process for locating definitions. This rule is not intended to change the meaning of any FAR text or clause. Movement of various definitions to FAR 2.101 is not intended to change the operation of the cost principles, and specifically the movement of the definition of ''claim'' to FAR 2.101 is not intended to change the scope or context of FAR 31.205–47(f)(1).

This final rule—

- Revises and moves the definitions of ''claim'' from 33.201; ''continued portion of the contract,'' ''partial termination,'' ''terminated portion of the contract'' from FAR 49.001; and ''termination for convenience'' from FAR 17.103;
- Adds a definition of ''termination for default'' at FAR 2.101 and a new paragraph 17.104(d) that explains the distinction between ''termination for convenience'' and ''cancellation'' that was deleted from the definition of ''termination for convenience'' that was moved from FAR 17.103;
- Revises FAR 33.213(a) to clarify the distinction between claims ''arising under a contract'' and claims ''relating to a contract'';
- Revises the definition of ''claim'' in the clause at FAR 52.233–1 to conform to the definition at FAR 2.101; and
- Makes other editorial revisions for clarity.

DoD, GSA, and NASA published a proposed rule in the **Federal Register** at 66 FR 42922, August 15, 2001, with a request for comment. One respondent submitted two comments to the proposed rule. The Councils considered and accepted both comments. The rule was modified as a result. The first comment recommended that the parenthetical reference at FAR 31.205(f)(1) be changed to reflect the new location of the definition of ''claim'' at FAR 2.101. This was done. The second comment recommended that a clarifying statement be added to the **Federal Register** notice stating that the movement of the various definitions to FAR 2.101 is not intended to change the operation of the cost principles, and specifically the movement of the definition of ''claim'' to FAR 2.101 is not intended to change the scope of FAR 31.205–47(f)(1). This was also done.

This is not a significant regulatory action, and therefore, was not subject to review under Section 6(b) of Executive Order 12866, Regulatory Planning and Review, dated September 30, 1993. This rule is not a major rule under 5 U.S.C. 804.

B. Regulatory Flexibility Act

The Department of Defense, the General Services Administration, and the National Aeronautics and Space Administration certify that this final rule will not have a significant economic impact on a substantial number of small entities within the meaning of the Regulatory Flexibility Act, 5 U.S.C. 601, *et seq.*, because the rule does not change policy. We did not receive any comments regarding this determination as a result of publication of the proposed rule in the **Federal Register** on August 15, 2001 (66 FR 42922).

C. Paperwork Reduction Act

The Paperwork Reduction Act does not apply because the changes to the FAR do not impose information collection requirements that require the approval of the Office of Management and Budget under 44 U.S.C. 3501, *et seq.*

List of Subjects in 48 CFR Parts 2, 17, 31, 33, 49, and 52

Government procurement.

Dated: June 19, 2002.

Al Matera,

Director, Acquisition Policy Division.

Therefore, DoD, GSA, and NASA amend 48 CFR parts 2, 17, 31, 33, 49, and 52 as set forth below:

1. The authority citation for 48 CFR parts 2, 17, 31, 33, 49, and 52 continues to read as follows:

Authority: 40 U.S.C. 486(c); 10 U.S.C. chapter 137; and 42 U.S.C. 2473(c).

PART 2—DEFINITIONS OF WORDS AND TERMS

2. Amend section 2.101 by adding, in alphabetical order, the definitions ''Claim,'' ''Continued portion of the contract,'' ''Partial termination,'' ''Termination for convenience,'' ''Termination for default,'' and ''Terminated portion of the contract'' to read as follows:

2.101 Definitions.

* * * * *

Claim means a written demand or written assertion by one of the contracting parties seeking, as a matter of right, the payment of money in a sum certain, the adjustment or interpretation of contract terms, or other relief arising under or relating to the contract. However, a written demand or written assertion by the contractor seeking the payment of money exceeding $100,000 is not a claim under the Contract Disputes Act of 1978 until certified as required by the Act. A voucher, invoice, or other routine request for payment that is not in dispute when submitted is not a claim. The submission may be converted to a claim, by written notice to the contracting officer as provided in

33.206(a), if it is disputed either as to liability or amount or is not acted upon in a reasonable time.

* * * * *

Continued portion of the contract means the portion of a contract that the contractor must continue to perform following a partial termination.

* * * * *

Partial termination means the termination of a part, but not all, of the work that has not been completed and accepted under a contract.

* * * * *

Termination for convenience means the exercise of the Government's right to completely or partially terminate performance of work under a contract when it is in the Government's interest.

Termination for default means the exercise of the Government's right to completely or partially terminate a contract because of the contractor's actual or anticipated failure to perform its contractual obligations.

Terminated portion of the contract means the portion of a contract that the contractor is not to perform following a partial termination. For construction contracts that have been completely terminated for convenience, it means the entire contract, notwithstanding the completion of, and payment for, individual items of work before termination.

* * * * *

PART 17—SPECIAL CONTRACTING METHODS

17.103 [Amended]

3. Amend section 17.103 by removing the definition ''Termination for convenience.''

4. Amend section 17.104 by adding paragraph (d) to read as follows:

17.104 General.

* * * * *

(d) The termination for convenience procedure may apply to any Government contract, including multiyear contracts. As contrasted with cancellation, termination can be effected at any time during the life of the contract (cancellation is effected between fiscal years) and can be for the total quantity or partial quantity (where as cancellation must be for all subsequent fiscal years' quantities).

PART 31—CONTRACT COST PRINCIPLES AND PROCEDURES

31.205–47 [Amended]

5. Amend section 31.205–47 in paragraph (f)(1) by removing ''(see 33.201)'' and adding ''(see 2.101)'' in its place.

PART 33—PROTESTS, DISPUTES, AND APPEALS

33.201 [Amended]

6. Amend section 33.201 by removing the definition ''Claim.''

7. Amend section 33.213 by revising paragraph (a) to read as follows:

33.213 Obligation to continue performance.

(a) In general, before passage of the Act, the obligation to continue performance applied only to claims arising under a contract. However, the Act, at 41 U.S.C. 605(b), authorizes agencies to require a contractor to continue contract performance in accordance with the contracting officer's decision pending a final resolution of any claim arising under, or relating to, the contract. (A claim arising under a contract is a claim that can be resolved under a contract clause, other than the clause at 52.233–1, Disputes, that provides for the relief sought by the claimant; however, relief for such claim can also be sought under the clause at 52.233–1. A claim relating to a contract is a claim that cannot be resolved under a contract clause other than the clause at 52.233–1.) This distinction is recognized by the clause with its Alternate I (see 33.215).

* * * * *

PART 49—TERMINATION OF CONTRACTS

49.001 [Amended]

8. Amend section 49.001 by removing the definitions ''Claim,'' ''Continued portion of the contract,'' ''Partial termination,'' and ''Terminated portion of the contract.''

PART 52—SOLICITATION PROVISIONS AND CONTRACT CLAUSES

52.213–4 [Amended]

9. Amend section 52.213–4 by revising the date of the clause to read ''(7/02)''; and by removing from paragraph (a)(2)(v) ''(Dec 1998)'' and adding ''7/02'' in its place.

10. Amend section 52.233–1 by revising the date and paragraph (c) of the clause; and by revising the introductory paragraph of Alternate I to read as follows:

52.233–1 Disputes.

* * * * *

Disputes (7/02)

* * * * *

(c) *Claim,* as used in this clause, means a written demand or written assertion by one of the contracting parties seeking, as a matter of right, the payment of money in a sum certain, the adjustment or interpretation of contract terms, or other relief arising under or relating to this contract. However, a written demand or written assertion by the Contractor seeking the payment of money exceeding $100,000 is not a claim under the Act until certified. A voucher, invoice, or other routine request for payment that is not in dispute when submitted is not a claim under the Act. The submission may be converted to a claim under the Act, by complying with the submission and certification requirements of this clause, if it is disputed either as to liability or amount or is not acted upon in a reasonable time.

* * * * *

Alternate I (Dec 1991). As prescribed in 33.215, substitute the following paragraph (i) for paragraph (i) of the basic clause:

* * * * *

[FR Doc. 02–15940 Filed 6–26–02; 8:45 am]

BILLING CODE 6820–EP–P

DEPARTMENT OF DEFENSE

GENERAL SERVICES ADMINISTRATION

NATIONAL AERONAUTICS AND SPACE ADMINISTRATION

48 CFR Parts 8 and 51

[FAC 2001–08; FAR Case 1999–614; Item II]

RIN 9000–AJ01

Federal Acquisition Regulation; Federal Supply Schedule Order Disputes and Incidental Items

AGENCIES: Department of Defense (DoD), General Services Administration (GSA), and National Aeronautics and Space Administration (NASA).

ACTION: Final rule.

SUMMARY: The Civilian Agency Acquisition Council and the Defense Acquisition Regulations Council (Councils) have agreed on a final rule amending the Federal Acquisition Regulation (FAR) to incorporate policies for disputes in schedule contracts and the handling of incidental items, and to remove the requirement to notify GSA when a schedule contractor refuses to honor an order placed by a Government contractor.

DATES: *Effective Date:* July 29, 2002.

FOR FURTHER INFORMATION CONTACT: The FAR Secretariat, Room 4035, GS Building, Washington, DC, 20405, (202) 501–4755, for information pertaining to status or publication schedules. For clarification of content, contact Ms. Linda Nelson, Procurement Analyst, at (202) 501–1900. Please cite FAC 2001–08, FAR case 1999–614.

SUPPLEMENTARY INFORMATION:

A. Background

DoD, GSA, and NASA published a proposed rule in the **Federal Register** at 65 FR 79702, December 19, 2000. Nine respondents submitted comments in response to the **Federal Register** notice. The public comments were received from contractors, professional associations, and Federal agencies. Clarifying revisions have been made to FAR 8.401(d) and 8.405–7(d) of the rule as a result of the public comments. A summary of the significant comments and concerns expressed by respondents is summarized below.

• *Addition of Open Market, Noncontract Items on a Schedule Order.* Some respondents believed that the intent regarding the incorporation of open market, noncontract items on a schedule order needed further clarification and recommended alternative language. The Councils agreed that absent a definition of ''open market'' or ''noncontract'' items in the FAR further clarification is needed. Accordingly, it has substituted the expression ''items not on the Federal Supply Schedule'' to best characterize what these items mean.

• *Inclusion of FAR Part 19 in the Listing of Applicable Acquisition Regulations.* One respondent expressed concern regarding the omission of a reference to FAR Part 19, Small Business Programs, in the proposed language in FAR 8.401(d) for adding open market, noncontract items to a Federal Supply Schedule BPA. The respondent believes that the omission of FAR Part 19 in the list of applicable acquisition regulations an agency must follow will allow ordering offices to circumvent the requirement that all procurements valued between $2,500 and $100,000 be set aside for small business concerns.

The Councils agreed that FAR Part 19 should be included in the list of applicable regulations in FAR 8.401(d)(1). Even though FAR 13.003(b)(1) addresses small business set-asides for acquisitions above the micro-purchase threshold, the inclusion of FAR Part 19, in addition to FAR Part 13, further emphasizes that ordering offices must consider small business programs when acquiring items not on the Federal Supply Schedule.

• *FAR Reference to Alternative Dispute Resolution (ADR) Procedures for Schedule Disputes.* One respondent suggested that in lieu of the proposed language in FAR 8.405–7(d) (''The contracting officer should use the alternative dispute resolution (ADR) procedures, when appropriate (see 33.214)''), the language should be revised to cite the policy statement as it is set forth in FAR 33.204, that ADR should be used ''to the maximum extent practicable.'' The respondent further suggested that either FAR 33.204 be cited alone, or that 33.204 be cited in addition to 33.214. Since the language in FAR 33.204 speaks to policy regarding the use of ADR, while 33.214 provides additional information regarding ADR, the Councils agreed that, for clarity, both citations be included in the final rule, and that the language in FAR 8.405–7(d) be revised.

This is not a significant regulatory action, and therefore, was not subject to review under Section 6(b) of Executive Order 12866, Regulatory Planning and Review, dated September 30, 1993. This rule is not a major rule under 5 U.S.C. 804.

B. Regulatory Flexibility Act

The Department of Defense, the General Services Administration, and the National Aeronautics and Space Administration certify that this final rule will not have a significant economic impact on a substantial number of small entities within the meaning of the Regulatory Flexibility Act, 5 U.S.C. 601, *et seq.*, because the rule addresses internal Government administrative procedures and does not impose any additional requirements on Government offerors or contractors.

C. Paperwork Reduction Act

The Paperwork Reduction Act does not apply because the changes to the FAR do not impose information collection requirements that require the approval of the Office of Management and Budget under 44 U.S.C. 3501, *et seq.*

List of Subjects in 48 CFR Parts 8 and 51

Government procurement.

Dated: June 19, 2002.

Al Matera,

Director, Acquisition Policy Division.

Therefore, DoD, GSA, and NASA amend 48 CFR parts 8 and 51 as set forth below:

1. The authority citation for 48 CFR parts 8 and 51 continues to read as follows:

Authority: 40 U.S.C. 486(c); 10 U.S.C. chapter 137; and 42 U.S.C. 2473(c).

PART 8—REQUIRED SOURCES OF SUPPLIES AND SERVICES

2. Amend section 8.401 by adding paragraph (d) to read as follows:

8.401 General.

* * * * *

(d) For administrative convenience, an ordering office contracting officer may add items not on the Federal Supply Schedule (also referred to as open market items) to a Federal Supply Schedule blanket purchase agreement (BPA) or an individual task or delivery order only if—

(1) All applicable acquisition regulations pertaining to the purchase of the items not on the Federal Supply Schedule have been followed (*e.g.,* publicizing (Part 5), competition requirements (Part 6), acquisition of commercial items (Part 12), contracting methods (Parts 13, 14, and 15), and small business programs (Part 19));

(2) The ordering office contracting officer has determined the price for the items not on the Federal Supply Schedule is fair and reasonable;

(3) The items are clearly labeled on the order as items not on the Federal Supply Schedule; and

(4) All clauses applicable to items not on the Federal Supply Schedule are included in the order.

3. Revise section 8.405–7 to read as follows:

8.405–7 Disputes.

(a) *Disputes pertaining to the performance of orders under a schedule contract.* (1) Under the Disputes clause of the schedule contract, the ordering office contracting officer may—

(i) Issue final decisions on disputes arising from performance of the order (but see paragraph (b) of this section); or

(ii) Refer the dispute to the schedule contracting officer.

(2) The ordering office contracting officer shall notify the schedule contracting officer promptly of any final decision.

(b) *Disputes pertaining to the terms and conditions of schedule contracts.* The ordering office contracting officer shall refer all disputes that relate to the contract terms and conditions to the schedule contracting officer for resolution under the Disputes clause of the contract and notify the schedule contractor of the referral.

(c) *Appeals.* Contractors may appeal final decisions to either the Board of Contract Appeals servicing the agency that issued the final decision or the U.S. Court of Federal Claims.

(d) *Alternative dispute resolution.* The contracting officer should use the alternative dispute resolution (ADR) procedures, to the maximum extent practicable (see 33.204 and 33.214).

PART 51—USE OF GOVERNMENT SOURCES BY CONTRACTORS

51.103 [Amended]

4. Amend section 51.103 by removing paragraph (b); and by redesignating paragraph (c) as (b).

[FR Doc. 02–15941 Filed 6–26–02; 8:45 am]

BILLING CODE 6820–EP–P

DEPARTMENT OF DEFENSE

GENERAL SERVICES ADMINISTRATION

NATIONAL AERONAUTICS AND SPACE ADMINISTRATION

48 CFR Part 31

[FAC 2001–08; FAR Case 1997–032; Item III]

RIN 9000–AH96

Federal Acquisition Regulation; Relocation Costs

AGENCIES: Department of Defense (DoD), General Services Administration (GSA), and National Aeronautics and Space Administration (NASA).

ACTION: Final rule.

SUMMARY: The Civilian Agency Acquisition Council and the Defense Acquisition Regulations Council (Councils) have agreed on a final rule amending the Federal Acquisition Regulation (FAR) ''relocation costs'' cost principle by making allowable payments for spouse employment assistance and for increased employee income and Federal Insurance Contributions Act (FICA) (26 U.S.C. chapter 21) taxes incident to allowable reimbursed relocation costs, increasing the ceiling for allowance of miscellaneous costs of relocation, and making a number of editorial changes.

DATES: *Effective Date:* July 29, 2002.

FOR FURTHER INFORMATION CONTACT: The FAR Secretariat, Room 4035, GS Building, Washington, DC, 20405, (202) 501–4755, for information pertaining to status or publication schedules. For clarification of content, contact Mr. Jeremy Olson at (202) 501–3221. Please cite FAC 2001–08, FAR case 1997–032.

SUPPLEMENTARY INFORMATION:

A. Background

DoD, GSA, and NASA published a proposed rule in the **Federal Register** at 64 FR 28330, May 25, 1999, that revised the cost principle at FAR 31.205–35, Relocation costs, to—

- Remove the numerous ceilings imposed on individual relocation cost elements;
- Recognize the growing commercial practice of reimbursing relocation costs on a lump-sum basis in certain situations;
- Make allowable payments for employment assistance for spouses and for increased employee income and FICA taxes incident to allowable reimbursed relocation costs;
- Increase the ceiling for allowable miscellaneous relocation costs; and
- Make a number of editorial changes.

The final rule amends the FAR to—

- Increase the limit for miscellaneous expenses when a lump-sum approach is used. The current FAR requires the reimbursement of miscellaneous expenses to be limited to actual expenses or $1,000 (if the lump-sum approach is used). The proposed rule removed the $1,000 limitation in its entirety. To reduce the Government's risk in this area, the final rule maintains a ceiling for miscellaneous expenses when a contractor uses the lump-sum payment method, but increases the limit from $1,000 to $5,000. The cost principle continues to have no ceiling for miscellaneous expenses when reimbursement is based on actual expenses;
- Add two new categories of allowable relocation costs. Consistent with the proposed rule, the final rule makes allowable two categories of expenses that are currently unallowable: (1) Payments for increased employee income and FICA taxes incident to allowable reimbursed relocations costs, and (2) payments for spouse employee assistance. Since contractors incur these types of costs in a good faith effort to keep transferred employees from being adversely affected by the relocation, it appears equitable to reimburse contractors for these types of costs. In addition, the Employee Relocation Council (ERC) data showed that it is a common industry practice to reimburse relocating employees for both of these costs; and
- Make a number of editorial changes, including revising the ''compensation for personal services'' cost principle at FAR 31.205–6(e)(2) to clarify that the differential allowances paid to compensate for increased taxes on employee compensation is unallowable, but that the payments to compensate for increased taxes incident to allowable reimbursed relocation costs is allowable.

Twenty-two respondents submitted public comments. The Councils considered all comments when developing the final rule. A discussion of the major comments follows:

- *Inadequate Analysis.* One commenter expressed the opinion that ''the proposed changes to FAR 31.205–35 have not been adequately researched and the potential impact has not been documented.'' The commenter went on to suggest that all of the proposed changes, except for the lump-sum payment option, have been carefully considered by the FAR drafters in the past and that those previous decisions should not be overturned lightly and without thorough research and documentation that demonstrate how the conditions have changed to make previously rejected proposed changes now acceptable. In a related comment, another commenter cautioned that ''the councils should carefully review the information provided in response to the questions directed to industry respondents to determine that the administrative time and cost savings will offset increased costs before eliminating the ceilings.''

Response to Comments: As an integral part of its review of the public comments submitted in response to this proposed rule, current industry relocation practices were carefully analyzed (primarily using data compiled by the ERC in its 1998 report entitled ''Relocation Assistance:

Transferred Employees''), together with the past regulatory history of the relocation cost principle.

- *Disagree With Removing Ceilings.* Four commenters opposed the removal of the current ceilings on individual relocation cost elements, while two of them added that ''if the current limitations are not adequate, they should be adjusted but not eliminated.'' These two commenters disagreed with the **Federal Register** justification that the ''ceilings represent unnecessary micromanagement of contractor business practices.'' One stated that ''cost ceilings are a means of controlling business expenses reimbursed with taxpayer dollars,'' and the other argued that ''the ceilings merely represent the maximum the Government believes is reasonable.'' The commenter continued: ''The FAR ceilings were initially implemented to assure that reasonableness determinations were consistently applied to all contractors and that unreasonable costs would not be paid because the cost principle is too general or unenforceable.''

One commenter stated that ''the ceilings * * * are necessary to protect the Government from liability for reimbursement of excessive costs.'' Another maintained that since the 14 percent limitation on closing costs and

the continuing costs of ownership of a former residence (FAR 31.205–35(a)(3) and (4)) and the 5 percent limitation on costs for purchasing a new home (FAR 31.205–35(a)(6)(ii)) were based on commercial industry standards, there is no justification for their removal. Another stated that these 14 percent and 5 percent caps appeared reasonable, but added that waivers ''may be acceptable on a case-by-case basis.''

Response to Comments: Three alternatives were evaluated during consideration of this issue: removal of the ceilings, adjustment of the ceilings, and retention of the current ceilings. The alternatives are discussed below:

Alternative 1—Remove Ceilings as Reflected in the Proposed Rule. The ERC data indicated that some of the current FAR ceilings on individual relocation cost elements were too low. One alternative to eliminating this relationship is for the ceilings to be eliminated as shown in the proposed rule, rather than adjusted. This alternative would be a fundamental shift in how the Government evaluates the allowability of contractor relocation costs. An argument can be made that this change is consistent with promoting greater acceptance of commercial practices. Under this approach, the Government would place greater reliance upon contractors' individual corporate relocation policies to limit such costs to reasonable amounts, rather than continuing to micromanage contractor business practices. This would involve a systems approach requiring greater use of professional judgment by our auditors and contracting officers to ensure that relocation costs in total are reasonable, which is more difficult than utilizing a series of caps to determine cost allowability. This alternative would tend to satisfy those who believe that the various ceilings on individual relocation cost elements have made the current cost principle unnecessarily detailed.

Alternative 2—Retain Ceilings With Appropriate Adjustments. This alternative is more consistent with the argument that the rationale behind the numerous past decisions to retain the ceilings was sound. That is, (1) industry practice varies widely, (2) reasonableness determinations should be consistently applied to all contractors, and (3) the cost principle without ceilings is too general and unenforceable. Further, the Federal procurement process argues for the retention of the ceilings. Without these stated ceilings, contracting officers would be put in the unenviable position of determining what constitutes reasonable relocation costs without ready access to the necessary information to make this determination. By performing the necessary market research and setting reasonable ceilings in this cost principle, the Government avoids the inefficient process of having hundreds of different procurement personnel performing various levels of research and making inconsistent determinations. The ceilings should be set at a level that allows contractors to be reimbursed for reasonable relocation costs that are not unallowable.

Alternative 3—Retain Current Ceilings but Reevaluate.

The basis for this alternative is that the rationale supporting a shift either to eliminate or to adjust the ceilings is incomplete, and a reasoned policy change cannot be made at this time. There is sufficient information to justify evaluation of whether a policy change should be considered, but there is not sufficient information to determine what a better policy might be. This is the approach adopted by the FAR Council.

• *Lump-Sum Approach.*

Lump-Sum Approach Would Result in Savings. Nine commenters argued that an expanded lump-sum approach would result in significant savings for contractors and the Government. One stated that at a Government business segment using a lump-sum approach, instead of an actual and reasonable method, savings achieved for the temporary living portion of relocation costs averaged $4,432 per relocated employee for a total savings on Government contracts of almost $200,000 per year. Similarly, another indicated that it is experiencing savings of $6.4 million per year by offering a lump-sum option for reimbursement of temporary living expenses to relocated employees in its commercial segments. This commenter projected that it has ''the potential to save an additional $1 million per year by offering the same option within its businesses that sell goods and services to the U. S. Government.'' Another commenter indicated an estimated saving of between $400,000 and $500,000 per year due to the lump-sum relocation option.

Disagree With Lump-Sum Approach. One commenter objected ''to the lump-sum payment as proposed because it would increase administrative cost with no evident benefit for the Government.'' The commenter added that ''few contractors use a lump-sum approach for total relocation cost,'' and expressed concern that ''expanding the lump-sum approach beyond miscellaneous expenses (for which a lump-sum up to $1,000 is already permitted) would make it virtually impossible to assure that the lump-sum payment does not include unallowable costs.'' While not directly opposing an expanded use of the lump-sum approach, three other commenters expressed concerns that ''in the absence of a database that establishes what constitutes reasonable relocation expenses in various locations, contracting officers will have difficulty negotiating advance agreements on a broad range of relocation expenses.'' One commenter added: ''Without some objective data, it is unreasonable to impose the burden of determining reasonableness on the contracting officer.''

Response to Comments: Review of the ERC data found that there is no current industry practice of using lump-sum reimbursements for the purchase or sale of a home. It appears inappropriate for the cost principle to recognize lump-sum payments for these types of relocation costs if there is no evidence of such an industry practice.

Additionally, an industry association commenter noted that in its survey of member companies, ''no respondent used the lump-sum approach on all relocation costs.'' Accordingly, the broad lump-sum reimbursement approach was removed from the rule.

The lump-sum reimbursement approach covering miscellaneous expenses only that is currently in the FAR was retained, but the ceiling amount was increased from $1,000 to $5,000. An unlimited lump-sum for miscellaneous expenses could easily become a sub rosa vehicle for reimbursing unallowable costs (such as a loss on the sale of a home) or for awarding a hidden bonus to the relocating employee. While some commenters contend that contractors and the Government will share in cost reductions through use of lump-sum payments, others believe the opposite will occur. No convincing data were found one way or the other. This is further bolstered by indications from ERC that companies use lump-sum reimbursements primarily to improve employee morale and to reduce administrative costs. The net cost impact is unclear. This issue may be pursued again in a separate FAR case to determine if there is a clear answer justifying adoption of a broader lump-sum approach.

• *Remove Mandatory Advance Agreement Requirement for Lump-Sum Approach.* Eight commenters recommended that the requirement for an advance agreement with the Government prior to using the lump-sum payment option be eliminated.

Some argued that ''the requirement for an advance agreement is not necessary'' because ''lump-sum payments are an accepted commercial practice'' and ''are more cost effective than actual cost tracking.'' One added that ''at times, whether or not an advance agreement is executed depends on subjective rather than objective factors.'' It added that ''inconsistent actions concerning the execution of an advance agreement on lump-sum payments could put companies on an unequal footing when bidding on Government contracts.'' Another observed that ''formal acceptance by the contracting officer of what is likely to be a case-by-case implementation of lump-sums is not consistent with streamlining or acceptance of commercial practices.'' Another stated that the mandatory advance agreement requirement ''is contrary to the spirit of Acquisition Reform'' and ''creates another administrative burden.''

Response to Comments: The original rationale for including a mandatory advance agreement requirement in the proposed rule was to give the Government additional control over the broadly worded lump-sum guidance. However, we have revised paragraph (b)(2) of FAR 31.205–35 to delete the mandatory advance agreement requirement, since we have removed the lump-sum approach from the rule.

• *Disagree/Agree With Removing Mortgage Interest Differential and Rental Differential Payments.* Two commenters saw no reason for removing the specific references to mortgage interest differential and rental differential payments currently found at paragraphs (a)(7) and (a)(8) of FAR 31.205–35. One stated: ''Our survey data, along with analysis of published relocation survey data, did not demonstrate any significant difference in conditions that exist now versus conditions that existed when these provisions were included in the cost principle. Therefore, we cannot determine the basis for the statement that coverage of these types of costs is no longer needed.'' Conversely, another commenter expressed its belief that ''eliminating paragraphs FAR 31.205–35(a)(7) and (8) will provide the advantage of simplification without adding costs to the Government.''

Response to Comments: Although interest rates are currently very low and the impact of interest differential is now very limited, interest rates could increase in the future. We have added both of these types of payments back into the paragraph (a) list of allowable relocation costs.

• *Delete FAR 31.205–35 (a)(1) thru (a)(9).* Three commenters, noting that the proposed rule would remove the specific references to mortgage interest differential and rental differential payments, expressed concern ''that Government auditors may assert that these costs are now unallowable, notwithstanding the statements pertaining to them included in the background section of this proposed rule.'' To avoid such disputes over these and other relocation costs not specifically mentioned under paragraph (a), they suggested that the whole list of allowable relocation costs at FAR 31.205–35(a) (1) thru (a)(9) be deleted.

Response to Comments: The Councils agree that removing the specific references to mortgage interest differential and rental differential payments from the cost principle could create confusion about the future allowability of such costs, and they have added both of these types of payments back into the paragraph (a) list of allowable relocation costs. The Councils are also convinced there is great benefit in making it absolutely clear that the listed types of relocation costs in paragraph (a) are allowable and do not think this list should be deleted.

• *Agree/Disagree With Making Spouse Employment Assistance Payments and Tax Gross-Ups Allowable.* Eight commenters agreed with the equitable treatment rationale in the **Federal Register** for making two new categories of relocation costs allowable: (1) Payments for spouse employment assistance, and (2) payments for increased employee income and FICA taxes incident to allowable reimbursed relocation costs (commonly referred to as ''tax gross-ups''). Several commenters ''applauded'' this change which, as one commenter put it, ''acknowledges that contractors find it necessary to make such payments to avoid unfairly penalizing the relocating employee.''

On the other hand, another commenter found it ''illogical'' to use the ''good faith effort'' rationale to allow these costs, but not the other unallowable relocation costs. However, after noting that ''there is some evidence that spousal employment assistance is becoming a general industry practice,'' that commenter stated that it does ''not object to the reconsideration of the allowability of spouse employment assistance (subject to reasonable limitations) after adequate research and analysis is performed.''

Regarding tax gross-ups, that commenter quoted from a 1985 Cost Principles Committee report: ''We believe that there was no Congressional intention to grant tax relief to contractor employees, but that it was the intent to grant such relief to Federal employees in order to reduce the out-of-pocket costs heretofore being borne by Federal employees.'' That commenter also pointed out that past Cost Principles Committee reports have concluded tax gross-ups are actually a compensation cost, and not a relocation cost. Finally, the commenter disagreed ''with the theory that contractors should be reimbursed for these types of costs merely because Federal employees are.'' In support of this position, the commenter cited OFPP's 1986 ''Study of Relocation Costs,'' which found that ''the policies governing the payment for contractor relocation should remain separate from the policies governing the relocation benefits paid to Federal employees.''

Response to Comments: The ERC data showed that it is a common industry practice to reimburse relocating employees for both of these costs. The Councils believe they are *bona fide* relocation costs and that it is fair to make them allowable now on Government contracts, just as it was fair to begin reimbursing Federal employees for them.

• *Apparent Conflict Between Tax Gross-Ups and Taxes Cost Principle.* One commenter noted an apparent conflict between the new language allowing tax gross-ups for reimbursed relocation costs and the taxes cost principle provision that makes Federal income taxes unallowable (FAR 31.205–41(b)(1)).

Response to Comments: The Councils do not see a conflict. The taxes cost principle makes contractor Federal income tax payments unallowable, not contractor reimbursements to an employee for the relocating employee's increased tax liability.

• *Federal Employees Do Not Get Tax Gross-Ups on FICA.* One commenter noted that ''Government employees are reimbursed income taxes on relocation reimbursements, but not FICA. Employees, particularly employees of private contractors, theoretically receive a future benefit from increased FICA contributions. Therefore, reimbursement of FICA could be considered inappropriate, and we would recommend reimbursement of income taxes, but not FICA.''

Response to Comments: The Councils disagree with this recommendation. They do not believe the allowability of contractor relocation costs must always parallel the treatment afforded relocating Federal employees; nor do they see uncertain future benefits as a valid reason for excluding FICA from

allowable contractor tax gross-ups. The Councils believe this is a *bona fide* relocation cost, which should be made allowable.

• *Administrative Costs Will Decrease/Increase.* Thirteen commenters agreed with the **Federal Register** rationale that the proposed rule would reduce administrative costs. As one commenter put it: ''We believe that the proposed changes would result in savings to both contractors and the Government by reducing or eliminating a number of burdensome administrative processes. For instance, with the elimination of thresholds, contractors would no longer need to track applicable costs separately and compare them to artificial thresholds. Detailed training on how to apply the thresholds would no longer be required. We believe that, to the extent that contractors find it otherwise appropriate and feasible to adopt lump-sum practices, record-keeping requirements would be reduced for both the contractor and the relocating employee. Finally, internal and external oversight requirements would be streamlined.''

In contrast, two commenters maintained that administrative costs would increase under the proposed rule. One argued that ''audit effort will necessarily increase (as will the contractor support of the increased audit effort) since instead of having stated reasonableness limitations, the auditor will now be forced to evaluate individual contractor systems for assuring reasonableness.'' The commenter added that ''using a broad criterion such as reasonableness naturally leads to differences of opinion,'' which ''will result in increased disputes which will increase the effort required by contractors, contracting officers, and the courts to settle these disputes.'' Finally, the commenter stated: ''Our survey of Government contractors found that the administrative cost incurred by contractors to comply with the requirements of FAR 31.205–35 is immaterial. Any potential savings would certainly be offset by the administrative cost involved in obtaining an advance agreement for the use of lump-sum payments.'' The other commenter expressed concern that ''without the ceilings, we anticipate contracting officers will need to perform a greater amount of analysis to determine the reasonableness of a contractor's proposed relocation costs.''

Response to Comments: The Councils expect that adoption of the rule will result in reduced administrative burden for contractors and increased administrative burden for the Government; but, they have no way to quantify these anticipated impacts. They do not consider an increase in the Government's administrative effort, by itself, to be a valid reason for retaining the existing FAR language.

• *Relocation Costs Will Increase.* Three commenters argued against the proposed rule because they believed it will result in higher relocation costs being claimed under Government contracts. Based on its own analysis of more than 50 Government contractors, one commenter projected that ''the proposed rule may result in more than $130 million in additional relocation costs claimed by Government contractors annually.'' However, another commenter countered that ''concerns about added costs or potential savings that may result from a policy change should be irrelevant to the objective at hand; *i.e.*, ensuring that the Government pays fair and reasonable expenses under noncompetitive and cost reimbursable contracts.''

Response to Comments: While relocation costs claimed on Government contracts may increase if the proposed rule is adopted, that is not a valid argument for retaining the existing FAR language. The Councils believe the cost principles should ensure that contractors are treated fairly, consistent with sound public policy. The cost principles should not be used as a cost containment mechanism.

This is not a significant regulatory action, and therefore, was not subject to review under Section 6(b) of Executive Order 12866, Regulatory Planning and Review, dated September 30, 1993. This rule is not a major rule under 5 U.S.C. 804.

B. Regulatory Flexibility Act

The Department of Defense, the General Services Administration, and the National Aeronautics and Space Administration certify that this final rule will not have a significant economic impact on a substantial number of small entities within the meaning of the Regulatory Flexibility Act, 5 U.S.C. 601, *et seq.*, because most contracts awarded to small entities use simplified acquisition procedures or are awarded on a competitive, fixed-price basis and do not require application of the cost principles contained in this rule.

C. Paperwork Reduction Act

The Paperwork Reduction Act does not apply because the changes to the FAR do not impose information collection requirements that require the approval of the Office of Management and Budget under 44 U.S.C. 3501, *et seq.*

List of Subjects in 48 CFR Part 31

Government procurement.

Dated: June 19, 2002.

Al Matera,

Director, Acquisition Policy Division.

Therefore, DoD, GSA, and NASA amend 48 CFR part 31 as set forth below:

PART 31—CONTRACT COST PRINCIPLES AND PROCEDURES

1. The authority citation for 48 CFR part 31 continues to read as follows:

Authority: 40 U.S.C. 486(c); 10 U.S.C. chapter 137; and 42 U.S.C. 2473(c).

2. Revise paragraph (e)(2) of section 31.205–6 to read as follows:

31.205–6 Compensation for personal services.

* * * * *

(e)(1) * * *

(2) Differential allowances for additional Federal, State, or local income taxes resulting from domestic assignments are unallowable. (However, payments for increased employee income or Federal Insurance Contributions Act taxes incident to allowable reimbursed relocation costs are allowable under 31.205–35(a)(10).)

* * * * *

3. Revise paragraphs (a), (b), (c), and (f)(1) of section 31.205–35 to read as follows:

31.205–35 Relocation costs.

(a) Relocation costs are costs incident to the permanent change of assigned work location (for a period of 12 months or more) of an existing employee or upon recruitment of a new employee. The following types of relocation costs are allowable as noted, subject to the limitations in paragraphs (b) and (f) of this subsection:

(1) Costs of travel of the employee and members of the employee's immediate family (see 31.205–46) and transportation of the household and personal effects to the new location.

(2) Costs of finding a new home, such as advance trips by the employee or the spouse, or both, to locate living quarters, and temporary lodging during the transition period for the employee and members of the employee's immediate family.

(3) Closing costs incident to the disposition of the actual residence owned by the employee when notified of the transfer (*e.g.*, brokerage fees, legal fees, appraisal fees, points, and finance charges), except that these costs, when

added to the costs described in paragraph (a)(4) of this subsection, shall not exceed 14 percent of the sales price of the property sold.

(4) Continuing costs of ownership of the vacant former actual residence being sold, such as maintenance of building and grounds (exclusive of fixing up expenses), utilities, taxes, property insurance, and mortgage interest, after the settlement date or lease date of a new permanent residence, except that these costs, when added to the costs described in paragraph (a)(3) of this subsection, shall not exceed 14 percent of the sales price of the property sold.

(5) Other necessary and reasonable expenses normally incident to relocation, such as disconnecting and connecting household appliances; automobile registration; driver's license and use taxes; cutting and fitting rugs, draperies, and curtains; forfeited utility fees and deposits; and purchase of insurance against damage to or loss of personal property while in transit.

(6) Costs incident to acquiring a home in the new work location, except that—

(i) These costs are not allowable for existing employees or newly recruited employees who were not homeowners before the relocation; and

(ii) The total costs shall not exceed 5 percent of the purchase price of the new home.

(7) Mortgage interest differential payments, except that these costs are not allowable for existing or newly recruited employees who, before the relocation, were not homeowners and the total payments are limited to an amount determined as follows:

(i) The difference between the mortgage interest rates of the old and new residences times the current balance of the old mortgage times 3 years.

(ii) When mortgage differential payments are made on a lump-sum basis and the employee leaves or is transferred again in less than 3 years, the amount initially recognized shall be proportionately adjusted to reflect payments only for the actual time of the relocation.

(8) Rental differential payments covering situations where relocated employees retain ownership of a vacated home in the old location and rent at the new location. The rented quarters at the new location must be comparable to those vacated, and the allowable differential payments may not exceed the actual rental costs for the new home, less the fair market rent for the vacated home times 3 years.

(9) Costs of canceling an unexpired lease.

(10) Payments for increased employee income or Federal Insurance Contributions Act (26 U.S.C. chapter 21) taxes incident to allowable reimbursed relocation costs.

(11) Payments for spouse employment assistance.

(b) The costs described in paragraph (a) of this subsection must also meet the following criteria to be considered allowable:

(1) The move must be for the benefit of the employer.

(2) Reimbursement must be in accordance with an established policy or practice that is consistently followed by the employer and is designed to motivate employees to relocate promptly and economically.

(3) The costs must not be otherwise unallowable under subpart 31.2.

(4) Amounts to be reimbursed shall not exceed the employee's actual expenses, except that for miscellaneous costs of the type discussed in paragraph (a)(5) of this subsection, a flat amount, not to exceed $5,000, may be allowed in lieu of actual costs.

(c) The following types of costs are unallowable:

(1) Loss on the sale of a home.

(2) Costs incident to acquiring a home in the new location as follows:

(i) Real estate brokers' fees and commissions.

(ii) Costs of litigation.

(iii) Real and personal property insurance against damage or loss of property.

(iv) Mortgage life insurance.

(v) Owner's title policy insurance when such insurance was not previously carried by the employee on the old residence. (However, the cost of a mortgage title policy is allowable.)

(vi) Property taxes and operating or maintenance costs.

(3) Continuing mortgage principal payments on a residence being sold.

(4) Costs incident to furnishing equity or nonequity loans to employees or making arrangements with lenders for employees to obtain lower-than-market rate mortgage loans.

* * * * *

(f) * * *

(1) The term of employment is 12 months or more;

* * * * *

[FR Doc. 02–15942 Filed 6–26–02; 8:45 am]

BILLING CODE 6820–EP–P

DEPARTMENT OF DEFENSE

GENERAL SERVICES ADMINISTRATION

NATIONAL AERONAUTICS AND SPACE ADMINISTRATION

48 CFR Part 52

[FAC 2001–08; Item IV]

Federal Acquisition Regulation; Technical Amendments

AGENCIES: Department of Defense (DoD), General Services Administration (GSA), and National Aeronautics and Space Administration (NASA).

ACTION: Final rule.

SUMMARY: This document makes amendments to the Federal Acquisition Regulation in order to update references and make editorial changes.

DATES: *Effective Date:* July 29, 2002.

FOR FURTHER INFORMATION CONTACT: The FAR Secretariat, Room 4035, GS Building, Washington, DC 20405, (202) 501–4755. Please cite FAC 2001–08, Technical Amendments.

List of Subjects in 48 CFR Part 52

Government procurement.

Dated: June 19, 2002.

Al Matera,

Director, Acquisition Policy Division.

Therefore, DoD, GSA, and NASA amend 48 CFR part 52 as set forth below:

PART 52—SOLICITATION PROVISIONS AND CONTRACT CLAUSES

1. The authority citation for 48 CFR part 52 continues to read as follows:

Authority: 40 U.S.C. 486(c); 10 U.S.C. chapter 137; and 42 U.S.C. 2473(c).

52.202–1 [Amended]

2. Amend section 52.202–1 by removing from Alternate I ''(Mar 2001)'' and adding ''(May 2001)'' in its place.

52.212–3 [Amended]

3. Amend section 52.212–3 in the provision heading by removing ''(May 2002)'' and adding ''(July 2002)'' in its place; removing from paragraph (c)(10)(i) of the provision ''principal place of ownership'' and adding ''principal office'' in its place; and removing from the first sentence of paragraph (c)(10)(ii) ''on the joint'' and adding ''in the joint'' in its place.

52.225–11 [Amended]

4. Amend section 52.225–11 in the clause heading by removing ''(May 2002)'' and adding ''(July 2002)'' in its

place; and in the third sentence of paragraph (b)(1) of the clause by removing ''and Balance of Payments Program''.

[FR Doc. 02–15943 Filed 6–26–02; 8:45 am]

BILLING CODE 6820–EP–P

DEPARTMENT OF DEFENSE

GENERAL SERVICES ADMINISTRATION

NATIONAL AERONAUTICS AND SPACE ADMINISTRATION

48 CFR Chapter 1

Federal Acquisition Regulation; Small Entity Compliance Guide

AGENCIES: Department of Defense (DoD), General Services Administration (GSA), and National Aeronautics and Space Administration (NASA).

ACTION: Small Entity Compliance Guide.

SUMMARY: This document is issued under the joint authority of the Secretary of Defense, the Administrator of General Services and the Administrator for the National Aeronautics and Space Administration. This *Small Entity Compliance Guide* has been prepared in accordance with Section 212 of the Small Business Regulatory Enforcement Fairness Act of 1996 (Public Law 104–121). It consists of a summary of rules appearing in Federal Acquisition Circular (FAC) 2001–08 which amend the FAR. An asterisk (*) next to a rule indicates that a regulatory flexibility analysis has been prepared in accordance with 5 U.S.C. 604. Interested parties may obtain further information regarding these rules by referring to FAC 2001–08 which precedes this document. These documents are also available via the Internet at *http://www.arnet.gov/far.*

FOR FURTHER INFORMATION CONTACT: Laurie Duarte, FAR Secretariat, (202) 501–4225. For clarification of content, contact the analyst whose name appears in the table below.

LIST OF RULES IN FAC 2001–08

Item	Subject	FAR case	Analyst
I	Definition of ''Claim'' and Terms Relating to Termination	2000–406	Klein.
II	Federal Supply Schedule Order Disputes and Incidental Items	1999–614	Nelson.
III	Relocation Costs	1997–032	Olson.
IV	Technical Amendments		

Item I—Definition of ''Claim'' and Terms Relating to Termination (FAR Case 2000–406)

The purpose of this final rule is to clarify the applicability of definitions, eliminate redundant or conflicting definitions, and streamline the process for locating definitions. This rule is not intended to change the meaning of any FAR text or clause. Movement of various definitions to FAR 2.101 is not intended to change the operation of the cost principles and, specifically, the movement of the definition of ''claim'' to FAR 2.101 is not intended to change the scope or context of FAR 31.205–47(f)(1).

This final rule—

- Revises and moves the definitions of ''claim'' from FAR 33.201; ''continued portion of the contract,'' ''partial termination,'' ''terminated portion of the contract'' from FAR 49.001; and ''termination for convenience'' from FAR 17.103;
- Adds a definition of ''termination for default'' at FAR 2.101 and a new paragraph (d) at FAR 17.104 that explains the distinction between ''termination for convenience'' and ''cancellation'' that was deleted from the definition of ''termination for convenience'' that was moved from FAR 17.103;
- Revises FAR 33.213(a) to clarify the distinction between claims ''arising under a contract'' and claims ''relating to a contract'';
- Revises the definition of ''claim'' in the FAR clause at 52.233–1 to conform to the definition at FAR 2.101; and
- Makes other editorial revisions for clarity.

Item II—Federal Supply Schedule Order Disputes and Incidental Items (FAR Case 1999–614)

This final rule amends the FAR to add policies on disputes and incidental items under Federal Supply Schedule contracts and to remove the requirement to notify GSA when a schedule contractor refuses to honor an order placed by a Government contractor. This rule affects all ordering offices acquiring supplies or services subject to the procedures of FAR Subpart 8.4.

Item III—Relocation Costs (FAR Case 1997–032)

This final rule amends the relocation cost principle at FAR 31.205–35. The rule will only affect contracting officers that price contracts using cost analysis, or that are required by a contract clause to use cost principles for the determination, negotiation, or allowance of costs.

The relocation cost principle addresses the allowability of costs incurred by an existing contractor employee incident to the permanent change of the employee's assigned work location for a period of 12 months or more, or upon recruitment of a new employee. The final rule revises the cost principle by making allowable payments for spouse employment assistance and for increased employee income and Federal Insurance Contributions Act taxes incident to allowable reimbursed relocation costs, increasing the ceiling for allowance of miscellaneous costs of relocation, and making a number of editorial changes.

Item IV—Technical Amendments

These amendments update sections and make editorial changes at FAR 52.202–1, 52.212–3, and 52.225–11.

Dated: June 19, 2002.

Al Matera,

Director, Acquisition Policy Division.

[FR Doc. 02–15944 Filed 6–26–02; 8:45 am]

BILLING CODE 6820–EP–P

Federal Register

Thursday,
June 27, 2002

Part VI

Department of Defense
General Services Administration
National Aeronautics and Space Administration

48 CFR Parts 39 and 52

Federal Acquisition Regulation; FAR Case 2001–033, Section 508 Contract Clause; Proposed Rule

DEPARTMENT OF DEFENSE

GENERAL SERVICES ADMINISTRATION

NATIONAL AERONAUTICS AND SPACE ADMINISTRATION

48 CFR Parts 39 and 52

Federal Acquisition Regulation; FAR Case 2001–033, Section 508 Contract Clause

AGENCIES: Department of Defense (DoD), General Services Administration (GSA), and National Aeronautics and Space Administration (NASA).

ACTION: Advance notice of proposed rulemaking.

SUMMARY: The Civilian Agency Acquisition Council and the Defense Acquisition Regulations Council (Councils) are considering whether there is a need at this time for changes to the Federal Acquisition Regulation or other acquisition guidance to promote more consistent and effective implementation of Section 508 of the Rehabilitation Act of 1973 and, if so, what specific changes are needed. The Councils request that interested parties provide comments.

DATES: Interested parties should submit comments in writing on or before August 26, 2002 to be considered in the formulation of a proposed rule.

ADDRESSES: Submit written comments to—General Services Administration, FAR Secretariat (MVP), 1800 F Street, NW, Room 4035, ATTN: Laurie Duarte, Washington, DC 20405.

Submit electronic comments via the Internet to— *farnotice.2001–033@gsa.gov*

Please submit comments only and cite FAR Case 2001–033, Section 508 Contract Clause (Notice) in all correspondence related to this case.

FOR FURTHER INFORMATION CONTACT: The FAR Secretariat, Room 4035, GS Building, Washington, DC, 20405, at (202) 501–4755 for information pertaining to status or publication schedules. The TTY Federal Relay Number for further information is 1–800–877–8973. For clarification of content, contact Ms. Linda Nelson, Procurement Analyst, at (202) 501–1900. Please cite FAR Case 2001–033, Section 508 Contract Clause (Notice).

SUPPLEMENTARY INFORMATION: Section 508 of the Rehabilitation Act of 1973 requires that when Federal departments or agencies develop, procure, maintain, or use electronic and information technology (EIT), they must ensure that the EIT allows (1) Federal employees with disabilities to have access to and use of information and data that is comparable to the access and use of information and data by other Federal employees; and (2) members of the public with disabilities seeking information from an agency to have access to and use of information and data that is comparable to the access and use of information and data by other members of the public who are not individuals with disabilities. The Councils agreed to amend the Federal Acquisition Regulation (FAR) under FAR Case 1999–607, Electronic and Information Technology Accessibility, to implement Section 508 (see **Federal Register** published at 66 FR 20894, April 25, 2001). The final rule became effective on June 25, 2001.

The FAR final rule incorporated standards developed by the Architectural and Transportation Barriers Compliance Board (also referred to as the ''Access Board''). Among other things, the standards set forth the technical and functional performance criteria for EIT accessibility. While only Federal agencies must comply with the requirements of Section 508; vendors interested in selling EIT to the Federal government are responsible for providing products or services that meet the applicable Access Board standards (and will be bound by the terms and conditions of the contract into which they enter).

The FAR rule implementing Section 508 does not require vendors to certify that offered products or services comply with the requirements of Section 508. Agencies are not to require such certification as a matter of policy, unless they have followed the procedures set forth in (i) FAR Subpart 1.3 on agency acquisition rulemaking, implementing section 22 of the Office of Federal Procurement Policy Act (OFPP Act), 41 U.S.C. 418b, and (ii) section 29 of the OFPP Act, 41 U.S.C. 425, addressing contractor certification requirements. (Section 29(c)(2) of the OFPP Act prohibits an executive agency from promulgating a regulation requiring certification unless it is required by statute, or approved on an exception basis by the agency head after the senior procurement executive provides written justification.)

As part of the implementation effort some have suggested a need for additional guidance. For example, some assert that the inclusion of an EIT clause in the FAR will promote greater consistency and reduce confusion in the implementation of Section 508 by avoiding the proliferation of agency specific clauses. By contrast, others contend that EIT standards are a ''requirements issue'' and are best addressed through the statement of work or other specifications instead of a clause.

The Councils are seeking the following input to help them determine the best approach to promote more consistent and effective implementation of Section 508.

1. *Need for additional guidance.* The Councils ask that respondents discuss whether additional acquisition guidance to implement Section 508 is needed at this time. Respondents are encouraged to discuss potential advantages and disadvantages.

2. *Form of guidance.* To the extent additional guidance is desired, the Councils ask respondents to identify if such guidance should be in the form of a FAR clause, a solicitation provision, other FAR coverage, or non-regulatory guidance. If a clause is desirable, respondents are encouraged to identify the types of EIT purchases on which a clause should focus (*e.g.,* all EIT purchases, EIT services only). The non-regulatory guidance may be in the form of reference material or frequently asked questions on the web site at *http://www.section508.gov.* Respondents are encouraged to discuss potential advantages and disadvantages of the form of guidance they suggest and why they believe other forms of guidance would be less beneficial or not appropriate.

3. *Content of guidance.* The Councils invite respondents' ideas regarding what should be included in the guidance.

Dated: June 20, 2002.

Al Matera,

Director, Acquisition Policy Division.

[FR Doc. 02–15976 Filed 6–26–02; 8:45 am]

BILLING CODE 6820–EP–P

Reader Aids

Federal Register

Vol. 67, No. 124

Thursday, June 27, 2002

CUSTOMER SERVICE AND INFORMATION

Federal Register/Code of Federal Regulations	
General Information, indexes and other finding aids	**202–523–5227**
Laws	**523–5227**
Presidential Documents	
Executive orders and proclamations	**523–5227**
The United States Government Manual	**523–5227**
Other Services	
Electronic and on-line services (voice)	**523–3447**
Privacy Act Compilation	**523–3187**
Public Laws Update Service (numbers, dates, etc.)	**523–6641**
TTY for the deaf-and-hard-of-hearing	**523–5229**

ELECTRONIC RESEARCH

World Wide Web

Full text of the daily Federal Register, CFR and other publications is located at: **http://www.access.gpo.gov/nara**

Federal Register information and research tools, including Public Inspection List, indexes, and links to GPO Access are located at: **http://www.nara.gov/fedreg**

E-mail

FEDREGTOC-L (Federal Register Table of Contents LISTSERV) is an open e-mail service that provides subscribers with a digital form of the Federal Register Table of Contents. The digital form of the Federal Register Table of Contents includes HTML and PDF links to the full text of each document.

To join or leave, go to **http://listserv.access.gpo.gov** and select *Online mailing list archives, FEDREGTOC-L, Join or leave the list (or change settings);* then follow the instructions.

PENS (Public Law Electronic Notification Service) is an e-mail service that notifies subscribers of recently enacted laws.

To subscribe, go to **http://hydra.gsa.gov/archives/publaws-l.html** and select *Join or leave the list* (or change settings); then follow the instructions.

FEDREGTOC-L and **PENS** are mailing lists only. We cannot respond to specific inquiries.

Reference questions. Send questions and comments about the Federal Register system to: **info@fedreg.nara.gov**

The Federal Register staff cannot interpret specific documents or regulations.

FEDERAL REGISTER PAGES AND DATE, JUNE

38193–38340 3
38341–38582 4
38583–38840 5
38841–39240 6
39241–39594 7
39595–39840 10
39841–40136 11
40137–40580 12
40581–40832 13
40833–41154 14
41155–41304 17
41305–41588 18
41589–41808 19
41809–42182 20
42183–42466 21
42467–42702 24
42703–42980 25
42981–43216 26
43217–43524 27

CFR PARTS AFFECTED DURING JUNE

At the end of each month, the Office of the Federal Register publishes separately a List of CFR Sections Affected (LSA), which lists parts and sections affected by documents published since the revision date of each title.

3 CFR

Proclamations:
7568 38583
7569 38585
7570 39241
7571 39595
7572 40137
7573 40139
7574 42177

Executive Orders:
12345 (Revoked by EO 13265) 39841
13159 (see Notice of June 18, 2002) 42181
13180 (Amended by 13264) 39243
13219 (See Notice of June 21, 2002 42703
13264 39243
13265 39841
13266 42467
13267 42469

Administrative Orders:
Notices:
Notice of June 18, 2002 42181
Notice of June 21, 2002 42703
Presidential Determinations:
No. 2002-19 of May 27, 2002 39245
No. 2002-20 of May 30, 2002 39247
No. 2002-21 of June 3, 2002 40833
No. 2002-22 of June 3, 2002 40835
No. 2002-23 of June 14, 2002 42705

5 CFR

534 39249
550 40837
553 40837
591 39249
890 41305
930 39249

Proposed Rules:
831 38210
842 38210
870 38210
890 38210
1600 42856
1601 42856
1603 42856
1604 42856
1605 42856
1606 42856
1640 42856
1645 42856
1650 42856
1651 42856
1653 42856
1655 42856
1690 42856

7 CFR

226 43448
271 41589
272 41589
273 41589
275 41589
277 41589
300 41155
301 ..... 41307, 41754, 41809, 41810
318 41155
723 41310
761 41311
905 40837
916 42707
927 39634
930 39637
948 40844
955 41811
981 41816
989 42471
1280 39249
1467 39254

Proposed Rules:
319 40874
330 41868
911 40876
983 43045
987 40876
999 40879
1033 39871
1951 41869

8 CFR

100 38341
103 ..... 38341, 39255
212 39255
214 40581
236 ..... 38341, 39255
238 39255
239 39255
240 39255
241 39255
245a 38341
264 40581
274a 38341
287 39255
299 38341

Proposed Rules:
214 40985
241 38324
264 40985

9 CFR

77 38841

10 CFR

72 39260

170 42612
171 42612
430 38324
Proposed Rules:
50 ....38427, 40622

11 CFR

100 ....38353, 40586
104 ....38353, 40586
109 40586
113 38353
Proposed Rules:
100 40881

12 CFR

25 38844
28 41619
203 ....43217, 43218
208 38844
369 38844
Ch. IX 39791
1710 38361
Proposed Rules:
550 39886
551 39886
702 38431
741 38431
747 38431
951 41872
1720 42200

13 CFR

Proposed Rules:
121 39311

14 CFR

23 ....39261, 39262, 39264
25 ....40587, 41157, 42478
39 ....38193, 38371, 38587, 38849, 38852, 39265, 39267, 39843, 39844, 40141, 40143, 40145, 40147, 40589, 41312, 41315, 41318, 41323, 41818, 42106, 42183, 42981, 42983, 42985, 42989, 43227, 43229, 43230, 43232
71 ....39473, 40591, 40592, 40985, 41160, 41819, 42477
73 41820
97 ....38195, 38197, 40594, 40595
129 42450
187 42462
1260 38855
Proposed Rules:
39 ....38212, 39311, 39314, 39640, 39900, 40239, 40249, 40623, 40626, 40894, 41355, 41357, 41640, 41875, 42202, 42204, 42207, 42739, 43056, 43058
47 41302
71 ....40252, 40627, 40896, 42511

15 CFR

732 38855
734 38855
738 38855
740 38855
742 38855
748 38855
770 38855
772 38855
774 38855
Proposed Rules:
50 38445

16 CFR

305 ....39269, 42478

17 CFR

3 ....38869, 41166
4 42709
11 39473
40 38379
231 43234
241 43234
Proposed Rules:
228 42914
229 42914
232 41877
240 ....38610, 39642, 39647, 41877, 42914
249 ....41877, 42914

18 CFR

35 39272
Proposed Rules:
284 39315

19 CFR

10 39286
12 ....38877, 43247
122 42710
Proposed Rules:
133 39321
141 39322
151 39322
201 38614
204 38614
206 38614
207 38614

20 CFR

217 42713
416 38381
Proposed Rules:
218 41205
220 41205
225 41205
404 39904
416 39904

21 CFR

173 42714
310 42992
352 41821
510 ....41823, 42717, 42997, 43247
52043247
522 41823
529 41823
558 43248
822 38878
884 40848
1308 42479
Proposed Rules:
101 38913
201 ....41360, 43068
211 ....41360, 43068
312 41642
601 ....41360, 43068
880 41890

22 CFR

41 ....38892, 40849
42 ....38892, 40849
Proposed Rules:
62 43264

23 CFR

172 40149
Proposed Rules:
450 41648

24 CFR

200 39238
1006 ....40774, 42185
1007 ....40774, 42185
Proposed Rules:
50 43208
58 43208
245 41582
574 43208
582 43208
583 43208
970 43208

25 CFR

502 41166
542 43390

26 CFR

1 ....38199, 40157, 41324
301 ....41324, 41621
Proposed Rules:
1 ....38214, 40629, 40896, 41362, 41653, 41892, 42210
41 38913
48 38913
145 38913
301 ....39915, 41362, 41892
602 41892

27 CFR

Proposed Rules:
4 38915
7 43496

28 CFR

105 41140
Proposed Rules:
16 39838
105 41147

29 CFR

1979 40597
4022 40850
4044 40850
Proposed Rules:
35 39830

30 CFR

18 38384
42 42314
44 38384
46 ....38384, 42314
47 42314
48 ....38384, 42314
49 38384
56 ....38384, 42314
57 ....38384, 42314
70 38384
71 38384
75 38384
77 42314
90 38384
917 ....39290, 41622
926 41825
Proposed Rules:
875 41756
917 41653
950 41656

31 CFR

917 ....38446, 38621, 38917, 38919

31 CFR

Proposed Rules:
1 40253
501 41658

32 CFR

199 42717
341 42722
Proposed Rules:
199 40597
320 38448
806b 38450

33 CFR

1 ....38386, 41329
3 ....41329, 43252
26 41329
81 41329
89 41329
100 ....41829, 41830, 41832, 41834, 42481
110 41329
117 ....38388, 40606, 41174, 41329, 42997, 43252
120 41329
127 41329
128 41329
148 41329
151 41329
153 41329
154 41329
155 41329
156 41329
157 41329
158 41329
159 41329
160 41329
164 41329
165 ....38389, 38390, 38394, 38590, 38593, 38595, 39292, 39294, 39296, 39299, 39597, 39598, 39600, 39846, 39848, 39850, 39852, 40162, 40608, 40610, 40611, 40613, 40615, 40617, 40851, 40853, 40854, 40856, 40858, 40859, 40861, 40863, 40865, 41175, 41177, 41329, 41334, 41335, 41337, 41339, 41341, 41625, 41836, 41838, 41845, 42483, 42486, 42722, 42723
175 42488
Proposed Rules:
66 42512
110 38625
155 40254
160 41659
165 ....38451, 39917, 39919, 39922, 39924, 41911, 42741

36 CFR

242 42185
1206 42493
1228 43253
1230 39473
1250 43253
1253 43254
1254 43253
Proposed Rules:
1190 41206
1191 41206
1228 43069

38 CFR

3 40867

17 41178
Proposed Rules:
20 40255

39 CFR

20 38596
111 40164

40 CFR

19 41343
27 41343
51 39602
52 ....38396, 38894, 39473, 39616, 39619, 39854, 39856, 39858, 40867, 41840, 42500, 42726, 42729, 42999, 43002, 43004, 43006, 43013,
61 39622
62 ....39628, 41179
63 ....38200, 39301, 39622, 39794, 40044, 40478, 40578, 40814, 41118
70 39630
71 38328
72 40394
75 40394
80 ....38338, 38398, 40169
81 ....42688, 43013
122 42501
144 ....38403, 39584
146 38403
180 ....38407, 38600, 40185, 40189, 40196, 40203, 40211, 40219, 41628, 41802, 41843, 42392, 43255
261 42187
271 ....38418, 40229, 43027
Proposed Rules:
9 41668
19 41363
27 41363
52 ....38218, 38453, 38626, 38630, 38924, 39658, 39659, 39926, 39927, 40891, 41914, 42516, 42519, 42743, 43071, 43072, 43073
61 39661
62 39661
63 ....38810, 39324, 39661, 41125, 41136, 41138, 42103, 42400
70 39662
80 ....38453, 40256
81 ....42697, 43072, 43073
122 ....41668, 42644
123 41668
124 41668
125 41668
141 38222
258 39662
260 ....39927, 40508
261 ....39927, 40508
264 40508
268 40508
270 40508
271 ....40260, 41207
273 40508
300 ....39326, 41914
413 38752
433 38752
438 38752
450 42644
463 38752
464 38752
467 38752
471 38752

41 CFR

Ch. 301 38604
101-9 38896
101-192 38896

42 CFR

400 ....40988, 40989, 42609
430 ....40988, 40989, 42609
431 ....40988, 40989, 42609
434 ....40988, 40989, 42609
435 ....40988, 40989, 42609
438 ....40988, 40989, 42609
440 ....40988, 40989, 42609
447 ....40988, 40989, 42609
Proposed Rules:
83 42962

43 CFR

422 38418
3730 38203
3820 38203
3830 38203
3850 38203

44 CFR

64 42501
Proposed Rules:
67 43073

45 CFR

1626 42198

46 CFR

45 41847
502 39858
503 39858
515 39858
520 39858
530 39858
535 39858
540 39858
550 39858
551 39858
555 39858
560 39858
Proposed Rules:
298 40260

47 CFR

1 41847
2 ....39307, 39862, 41847, 42730
15 ....38903, 39632, 42730
25 ....39307, 39308, 39862, 43031
27 41847
52 40619
54 ....41862, 42504
63 41181
64 39863
69 42730
73 ....38206, 38207, 38423, 39864, 42198, 42506, 42507
76 40870
78 43257
87 ....39862, 41847
90 41847
95 ....41847, 42507
101 43031
301 41182
Proposed Rules:
2 40898
32 42211
53 42211
64 ....39929, 42211
73 ....38244, 38456, 38924, 39932, 39933, 39934, 39935, 40632, 40907, 41363, 41364, 42215, 42216, 42524, 43265
76 ....42524, 43265
97 40898

48 CFR

Chapter 1 ....43512, 43521
2 43513
8 43514
17 43513
31 ....43513, 43516
33 43513
49 43513
51 43514
52 ....43513, 43520
Proposed Rules:
Ch. 1 42172
2 42174
29 38552
31 ....40136, 42174
35 42174
39 43524
52 ....38552, 43524
1813 38904
1847 38908
1852 ....38904, 38909

49 CFR

105 42948
106 42948
107 42948
171 42948
238 42892
350 41196
385 41196
571 ....38704, 41348
590 38704
595 38423
624 ....40100, 41579
1540 41635
1544 41635
Proposed Rules:
541 43075
571 41365

50 CFR

11 38208
16 39865
17 ....40790, 41367
37 38208
100 42185
222 41196
223 41196
600 40870
635 39869
648 ....38608, 38909
660 ....39632, 40232, 40870
679 ....40621, 41639
Proposed Rules:
17 ....39106, 39206, 39936, 40633, 40657, 41669, 41918, 42217
18 39668
20 40128
25 41918
32 41918
223 ....38459, 39328, 40679
224 39328
226 ....39106, 40679
600 43265
622 40263
635 43266
648 ....39329, 41936
654 42744
660 ....38245, 39330, 42525, 42750
679 40680

REMINDERS

The items in this list were editorially compiled as an aid to Federal Register users. Inclusion or exclusion from this list has no legal significance.

RULES GOING INTO EFFECT JUNE 27, 2002

AGRICULTURE DEPARTMENT

Agricultural Marketing Service

Cotton research and promotion order:

Cotton Board Rules and Regulations; amendments; published 5-28-02

AGRICULTURE DEPARTMENT

Food and Nutrition Service

Child nutrition programs:

National school lunch, school breakfast, and child and adult care food programs—

Infant meal program; whole cow's milk eliminated as option in reimbursable meals for infants under one year of age; published 5-28-02

ENVIRONMENTAL PROTECTION AGENCY

Pesticide programs:

Cyhalofop-butyl; correction; published 6-27-02

HEALTH AND HUMAN SERVICES DEPARTMENT

Food and Drug Administration

Animal drugs, feeds, and related products:

Chlortetracycline; published 6-27-02

Sponsor name and adress changes—

Church & Dwight Co., Inc.; published 6-27-02

INTERIOR DEPARTMENT

Fish and Wildlife Service

Endangered and threatened species:

Critical habitat designations—

Robust spineflower; published 5-28-02

NATIONAL ARCHIVES AND RECORDS ADMINISTRATION

Public availablity and use:

NARA facilities; addresses and hours; published 6-27-02

Technical amendments; published 6-27-02

SECURITIES AND EXCHANGE COMMISSION

Reports and guidance documents; availability, etc.:

Application of certain provisions of the federal securities laws to trading in security futures products; published 6-27-02

TRANSPORTATION DEPARTMENT

Federal Aviation Administration

Airworthiness directives:

Boeing; published 5-23-02

Eurocopter France; published 6-12-02

General Electric Co.; published 5-23-02

Pratt & Whitney; published 5-23-02

TRANSPORTATION DEPARTMENT

National Highway Traffic Safety Administration

Motor vehicle safety standards:

Air brake systems—

Trailer test rig modifications; technical amendments; published 5-28-02

COMMENTS DUE NEXT WEEK

AGRICULTURE DEPARTMENT

Animal and Plant Health Inspection Service

Livestock and poultry disease control:

Foot-and-mouth disease; indemnification; comments due by 7-1-02; published 5-1-02 [FR 02-10724]

AGRICULTURE DEPARTMENT

Animal and Plant Health Inspection Service

Plant-related quarantine, domestic:

Karnal bunt; comments due by 7-1-02; published 5-1-02 [FR 02-10723]

COMMERCE DEPARTMENT

Census Bureau

Document certification process; comments due by 7-5-02; published 6-4-02 [FR 02-13603]

COMMERCE DEPARTMENT

National Oceanic and Atmospheric Administration

Fishery conservation and management:

Caribbean, Gulf of Mexico, and South Atlantic fisheries—

Puerto Rico and U.S. Virgin Islands; environmental impact statement; scoping meetings; comments due by 7-1-02; published 5-31-02 [FR 02-13707]

COMMERCE DEPARTMENT

National Oceanic and Atmospheric Administration

Fishery conservation and management:

Northeastern United States fisheries—

Northeast multispecies; comments due by 7-5-02; published 6-5-02 [FR 02-14050]

COMMERCE DEPARTMENT

National Oceanic and Atmospheric Administration

Fishery conservation and management:

West Coast States and Western Pacific fisheries—

Western Pacific pelagic; comments due by 7-3-02; published 6-3-02 [FR 02-13854]

DEFENSE DEPARTMENT

Grant and agreement regulations:

Technology investment agreements; comments due by 7-1-02; published 4-30-02 [FR 02-10280]

ENERGY DEPARTMENT

Aquisition regulations:

Classified information security violations; civil penalties assessment; procedural rules; comments due by 7-1-02; published 4-1-02 [FR 02-07764]

ENERGY DEPARTMENT

Federal Energy Regulatory Commission

Natural Gas Policy Act:

Short-term and interstate natural gas transportation services; regulation; comments due by 6-30-02; published 6-7-02 [FR 02-14176]

ENVIRONMENTAL PROTECTION AGENCY

Air programs:

Fuels and fuel additives—

Reformulated gasoline covered area provisions; modifications; comments due by 7-5-02; published 6-4-02 [FR 02-13977]

Air quality implementation plans:

Preparation, adoption, and submittal—

Regional haze rule; Western States and eligible Indian Tribes; sulfur dioxide milestones and backstop emissions trading program; comments due by 7-5-02; published 5-6-02 [FR 02-10872]

Air quality implementation plans; approval and promulgation; various States:

Alaska; comments due by 7-3-02; published 6-3-02 [FR 02-13698]

ENVIRONMENTAL PROTECTION AGENCY

Air quality implementation plans; approval and promulgation; various States:

California; comments due by 7-5-02; published 6-4-02 [FR 02-13798]

ENVIRONMENTAL PROTECTION AGENCY

Air quality implementation plans; approval and promulgation; various States:

California; comments due by 7-5-02; published 6-4-02 [FR 02-13799]

ENVIRONMENTAL PROTECTION AGENCY

Air quality implementation plans; approval and promulgation; various States:

Indiana; comments due by 7-1-02; published 5-31-02 [FR 02-13516]

ENVIRONMENTAL PROTECTION AGENCY

Air quality implementation plans; approval and promulgation; various States:

Indiana; comments due by 7-1-02; published 5-31-02 [FR 02-13517]

Montana; comments due by 7-1-02; published 5-2-02 [FR 02-10333]

Montana; correction; comments due by 7-1-02; published 6-14-02 [FR 02-15091]

FEDERAL COMMUNICATIONS COMMISSION

Common carrier services:

Satellite communications—

Alaska; domestic satellite earth stations licensing in bush communities; comments due by 7-1-02; published 5-30-02 [FR 02-13298]

Telecommunications Act of 1996; implementation—
Universal service; rural health care support mechanism; comments due by 7-1-02; published 5-15-02 [FR 02-12096]
Digital television stations; table of assignments:
South Dakota; comments due by 7-1-02; published 5-15-02 [FR 02-11975]
Television broadcasting:
Digital television construction deadline extension requests; denial policy; comments due by 7-5-02; published 6-4-02 [FR 02-13908]

HEALTH AND HUMAN SERVICES DEPARTMENT
Food and Drug Administration
Human drugs:
Labeling of drug products (OTC)—
Standardized format; compliance dates partially delayed; comments due by 7-5-02; published 4-5-02 [FR 02-08193]

HEALTH AND HUMAN SERVICES DEPARTMENT
Food and Drug Administration
Medical devices:
Dental devices—
Intraoral devices for snoring and/or obstructive sleep apnea; classification; comments due by 7-5-02; published 4-5-02 [FR 02-08347]

HEALTH AND HUMAN SERVICES DEPARTMENT
Health insurance reform:
Health Insurance Portability and Accountability Act of 1996—
Electronic transactions and code sets standards; modifications; comments due by 7-1-02; published 5-31-02 [FR 02-13614]
Transactions and code set standards for electronic transactions; modifications; comments due by 7-1-02; published 5-31-02 [FR 02-13615]

INTERIOR DEPARTMENT
Fish and Wildlife Service
Endangered and threatened species:
Critical habitat designations—
Appalachian elktoe; comments due by 7-1-02; published 5-16-02 [FR 02-12175]

INTERIOR DEPARTMENT
National Park Service
Special regulations:
Assateague Island National Seashore, MD and VA; personal watercraft use; comments due by 7-5-02; published 5-6-02 [FR 02-11046]

INTERIOR DEPARTMENT
Surface Mining Reclamation and Enforcement Office
Permanent program and abandoned mine land reclamation plan submissions:
Kentucky; comments due by 7-5-02; published 6-4-02 [FR 02-13986]

LABOR DEPARTMENT
Employment and Training Administration
Aliens:
Labor certification for permanent employment in U.S.; new system implementation; comments due by 7-5-02; published 5-6-02 [FR 02-10570]

LABOR DEPARTMENT
Occupational Safety and Health Administration
Wendell H. Ford Aviation Investment and Reform Act for 21st Century; implementation:
Discrimination complaints; handling procedures; comments due by 6-30-02; published 6-13-02 [FR 02-14950]

NUCLEAR REGULATORY COMMISSION
Rulemaking communications improvements; comments due by 7-1-02; published 5-30-02 [FR 02-13468]

SOCIAL SECURITY ADMINISTRATION
Supplemental security income:
Aged, blind, and disabled—
Access to information held by financial institutions; comments due by 7-1-02; published 5-2-02 [FR 02-10842]

TRANSPORTATION DEPARTMENT
Coast Guard
Ports and waterways safety:
Buffalo Captain of Port Zone, NY; security zones; comments due by 7-1-02; published 5-30-02 [FR 02-13515]

TRANSPORTATION DEPARTMENT
Federal Aviation Administration
Airworthiness directives:
Air Tractor, Inc.; comments due by 7-5-02; published 6-4-02 [FR 02-13423]
Air Tractor, Inc.; correction; comments due by 7-5-02; published 6-20-02 [FR C2-13423]

TRANSPORTATION DEPARTMENT
Federal Aviation Administration
Airworthiness directives:
Boeing; comments due by 7-1-02; published 5-15-02 [FR 02-12068]

TRANSPORTATION DEPARTMENT
Federal Aviation Administration
Airworthiness directives:
Eurocopter France; comments due by 7-1-02; published 5-2-02 [FR 02-10649]
McDonnell Douglas; comments due by 7-1-02; published 5-2-02 [FR 02-10248]

TRANSPORTATION DEPARTMENT
Federal Aviation Administration
Airworthiness directives:
McDonnell Douglas; comments due by 7-1-02; published 5-15-02 [FR 02-12070]

TRANSPORTATION DEPARTMENT
Federal Aviation Administration
Airworthiness directives:
Raytheon; comments due by 7-5-02; published 5-29-02 [FR 02-13289]

TRANSPORTATION DEPARTMENT
Federal Aviation Administration
Bell; comments due by 7-1-02; published 4-30-02 [FR 02-10533]

TRANSPORTATION DEPARTMENT
National Highway Traffic Safety Administration
Confidential business information; comments due by 7-1-02; published 4-30-02 [FR 02-10181]
Motor vehicle safety standards:
Child restraint systems—
Improved test dumies, new or revised injury criteria, and extended child restraints standards; comments due by 7-1-02; published 5-1-02 [FR 02-10507]
Side and rear impact safety protection requirements; comments due by 7-1-02; published 5-1-02 [FR 02-10506]

TRANSPORTATION DEPARTMENT
Research and Special Programs Administration
Hazardous materials:
Hazardous materials transportation—
Offerors and transporters; security requirements; correction; comments due by 7-3-02; published 5-23-02 [FR 02-13003]

TREASURY DEPARTMENT
Currency and financial transactions; financial reporting and recordkeeping requirements:
USA PATRIOT Act; implementation—
Anti-money laundering programs for certain foreign accounts; due diligence policies, procedures, and controls; comments due by 7-1-02; published 5-30-02 [FR 02-13411]

VETERANS AFFAIRS DEPARTMENT
Fisher Houses and other temporary lodging; veterans use; comments due by 7-1-02; published 4-30-02 [FR 02-10597]

LIST OF PUBLIC LAWS

This is a continuing list of public bills from the current session of Congress which have become Federal laws. It may be used in conjunction with ''P L U S'' (Public Laws Update Service) on 202–523–6641. This list is also available online at *http://www.nara.gov/fedreg/plawcurr.html*.

The text of laws is not published in the **Federal Register** but may be ordered in ''slip law'' (individual pamphlet) form from the Superintendent of Documents, U.S. Government Printing Office, Washington, DC 20402 (phone, 202–512–1808). The text will also be made available on the Internet from GPO Access at *http://www.access.gpo.gov/nara/nara005.html*. Some laws may not yet be available.

S. 2431/P.L. 107–196
Mychal Judge Police and Fire Chaplains Public Safety

Officers' Benefit Act of 2002 (June 24, 2002; 116 Stat. 719)

H.R. 3275/P.L. 107–197
To implement the International Convention for the Suppression of Terrorist Bombings to strengthen criminal laws relating to attacks on places of public use, to implement the International Convention of the Suppression of the Financing of Terrorism, to combat terrorism and defend the Nation against terrorist acts, and for other purposes. (June 25, 2002; 116 Stat. 721)

Last List June 21, 2002

Public Laws Electronic Notification Service (PENS)

PENS is a free electronic mail notification service of newly enacted public laws. To subscribe, go to *http://hydra.gsa.gov/archives/publaws-l.html* or send E-mail to **listserv@listserv.gsa.gov** with the following text message:

SUBSCRIBE PUBLAWS-L
Your Name.

Note: This service is strictly for E-mail notification of new laws. The text of laws is not available through this service. **PENS** cannot respond to specific inquiries sent to this address.