AUTHENTICATED U.S. GOVERNMENT INFORMATION GPO

Federal Register

3–20–02 Wednesday
Vol. 67 No. 54 Mar. 20, 2002
Pages 12829–13082

The **FEDERAL REGISTER** is published daily, Monday through Friday, except official holidays, by the Office of the Federal Register, National Archives and Records Administration, Washington, DC 20408, under the Federal Register Act (44 U.S.C. Ch. 15) and the regulations of the Administrative Committee of the Federal Register (1 CFR Ch. I). The Superintendent of Documents, U.S. Government Printing Office, Washington, DC 20402 is the exclusive distributor of the official edition.

The **Federal Register** provides a uniform system for making available to the public regulations and legal notices issued by Federal agencies. These include Presidential proclamations and Executive Orders, Federal agency documents having general applicability and legal effect, documents required to be published by act of Congress, and other Federal agency documents of public interest.

Documents are on file for public inspection in the Office of the Federal Register the day before they are published, unless the issuing agency requests earlier filing. For a list of documents currently on file for public inspection, see http://www.nara.gov/fedreg.

The seal of the National Archives and Records Administration authenticates the Federal Register as the official serial publication established under the Federal Register Act. Under 44 U.S.C. 1507, the contents of the **Federal Register** shall be judicially noticed.

The **Federal Register** is published in paper and on 24x microfiche. It is also available online at no charge as one of the databases on GPO Access, a service of the U.S. Government Printing Office.

The online edition of the **Federal Register** is issued under the authority of the Administrative Committee of the Federal Register as the official legal equivalent of the paper and microfiche editions (44 U.S.C. 4101 and 1 CFR 5.10). It is updated by 6 a.m. each day the **Federal Register** is published and it includes both text and graphics from Volume 59, Number 1 (January 2, 1994) forward.

GPO Access users can choose to retrieve online **Federal Register** documents as TEXT (ASCII text, graphics omitted), PDF (Adobe Portable Document Format, including full text and all graphics), or SUMMARY (abbreviated text) files. Users should carefully check retrieved material to ensure that documents were properly downloaded.

On the World Wide Web, connect to the **Federal Register** at http://www.access.gpo.gov/nara. Those without World Wide Web access can also connect with a local WAIS client, by Telnet to swais.access.gpo.gov, or by dialing (202) 512–1661 with a computer and modem. When using Telnet or modem, type swais, then log in as guest with no password.

For more information about GPO Access, contact the GPO Access User Support Team by E-mail at gpoaccess@gpo.gov; by fax at (202) 512–1262; or call (202) 512–1530 or 1–888–293–6498 (toll free) between 7 a.m. and 5 p.m. Eastern time, Monday–Friday, except Federal holidays.

The annual subscription price for the **Federal Register** paper edition is $699, or $764 for a combined **Federal Register, Federal Register** Index and List of CFR Sections Affected (LSA) subscription; the microfiche edition of the **Federal Register** including the **Federal Register** Index and LSA is $264. Six month subscriptions are available for one-half the annual rate. The charge for individual copies in paper form is $10.00 for each issue, or $10.00 for each group of pages as actually bound; or $2.00 for each issue in microfiche form. All prices include regular domestic postage and handling. International customers please add 25% for foreign handling. Remit check or money order, made payable to the Superintendent of Documents, or charge to your GPO Deposit Account, VISA, MasterCard or Discover. Mail to: New Orders, Superintendent of Documents, P.O. Box 371954, Pittsburgh, PA 15250–7954.

There are no restrictions on the republication of material appearing in the **Federal Register.**

How To Cite This Publication: Use the volume number and the page number. Example: 67 FR 12345.

SUBSCRIPTIONS AND COPIES

PUBLIC	
Subscriptions:	
Paper or fiche	**202–512–1800**
Assistance with public subscriptions	**202–512–1806**
General online information	**202–512–1530; 1–888–293–6498**
Single copies/back copies:	
Paper or fiche	**202–512–1800**
Assistance with public single copies	**1–866–512–1800 (Toll-Free)**
FEDERAL AGENCIES	
Subscriptions:	
Paper or fiche	**202–523–5243**
Assistance with Federal agency subscriptions	**202–523–5243**

What's NEW!

Federal Register Table of Contents via e-mail

Subscribe to FEDREGTOC, to receive the **Federal Register** Table of Contents in your e-mail every day.

If you get the HTML version, you can click directly to any document in the issue.

To subscribe, go to **http://listserv.access.gpo.gov** and select:

Online mailing list archives
FEDREGTOC-L
Join or leave the list

Then follow the instructions.

Printed on recycled paper.

Contents

Federal Register

Vol. 67, No. 54

Wednesday, March 20, 2002

Advisory Council on Historic Preservation
See Historic Preservation, Advisory Council

Agricultural Marketing Service
NOTICES
Apple juice from concentrate; grade standards, 12958

Agriculture Department
See Agricultural Marketing Service
See Animal and Plant Health Inspection Service
See Commodity Credit Corporation
See Forest Service
PROPOSED RULES
Equal Access to Justice Act; implementation, 12898–12903

Air Force Department
NOTICES
Meetings:
Scientific Advisory Board, 12978

Animal and Plant Health Inspection Service
RULES
Exportation and importation of animals and animal products:
Bovine spongiform encephalopathy; disease status change—
Austria, 12833–12834
Finland, 12831–12832

Army Department
NOTICES
Environmental statements; availability, etc.:
Makua Military Reservation, Oahu, HI; military training activities, 12978–12979

Centers for Disease Control and Prevention
NOTICES
Agency information collection activities:
Proposed collection; comment request, 12995–12996
Meetings:
National Vaccine Advisory Committee, 12996
Reports and guidance documents; availability, etc.:
Human exposure to environmental chemicals, national report; proposed criteria for selecting new chemicals to appear in future releases, 12996–12997

Centers for Medicare & Medicaid Services
NOTICES
Agency information collection activities:
Proposed collection; comment request, 12997–12999

Coast Guard
RULES
Ports and waterways safety:
Long Beach, CA; safety zone, 12873–12874
Regattas and marine parades:
St. Mary's Seahawk Sprint, 12871–12872
PROPOSED RULES
Ports and waterways safety:
Nahant Bay, Lynn, MA; safety zone, 12945–12947
Naval Vessel Protection Zones, 12940–12943
New London, CT; safety zone, 12943–12945
Oahu, Maui, Hawaii, and Kauai, HI; anchorages and security zones, 12938–12940
Potomac River, Washington Channel, Washington, DC; security zone, 12947–12949

Commerce Department
See International Trade Administration
See National Oceanic and Atmospheric Administration

Committee for the Implementation of Textile Agreements
NOTICES
Textile and apparel categories:
Quota and visa requirements; products entered as sets, 12977–12978

Commodity Credit Corporation
RULES
Loan and purchase programs:
Tobacco Loss Assistance Program, 12829–12831

Consumer Product Safety Commission
PROPOSED RULES
Upholstered furniture flammability; regulatory options; meeting, 12916–12918

Customs Service
RULES
Merchandise entry:
Steel products; payment of duties, 12860–12861
NOTICES
Uruguay Round Agreements Act (URAA):
Foreign entities violating textile transshipment and country of origin rules; list, 13042–13044

Defense Department
See Air Force Department
See Army Department
RULES
Federal Acquisition Regulation (FAR):
Commercial items—
Solicitation/contract/order (SF 1449), 13048–13052
Contract action and contracting action; definitions, 13052–13054
Helium acquisition, 13063–13065
HUBZone Program applicability, 13064–13066
Introduction, 13047–13049
Labor clauses; application, 13065–13067
Procurement integrity rewrite, 13056–13063
Sealed bid and negotiated procurements; definitions, 13053–13057
Small entity compliance guide, 13067–13069
Technical amendments, 13066–13068
PROPOSED RULES
Closures and realignment:
Munitions response site prioritization protocol; development, 12937–12938
Federal Acquisition Regulation (FAR):
Commercial items—
Contract terms and conditions required to implement statute or Executive orders, 13075–13077
Miscellaneous cost principles, 13071–13073
Prohibited sources, 13079–13081

Employment and Training Administration
NOTICES
Adjustment assistance:
International Paper Co., 13013–13014
LTV Steel et al., 13014–13015
Parallax Power Components LLC, 13015
SGL Carbon Group, 13016
Universal Furniture Ltd., 13016
Valley City Steel et al., 13016–13018
Adjustment assistance and NAFTA transitional adjustment assistance:
Nedec America Corp./Power General et al., 13010–13012
Steel Group et al., 13012–13013
NAFTA transitional adjustment assistance:
Chambersburg Engineering Co., 13018
Outboard Marine Corp., 13018
Parallax Power Components LLC, 13018

Energy Department
See Federal Energy Regulatory Commission
NOTICES
Electricity export and import authorizations, permits, etc.:
EPCOR Merchant & Capital (US) Inc., 12979–12980
Meetings:
Worker Advocacy Advisory Committee, 12980

Environmental Protection Agency
RULES
Air programs:
Stratospheric ozone protection—
Fire suppression substitutes for ozone-depleting substances; restrictions removal; list of substitutes; correction, 12874–12875
Pesticides; tolerances in food, animal feeds, and raw agricultural commodities:
Isoxadifen-ethyl, 12875–12879
Toxic substances:
Significant new uses—
Propanedioic-acid etc., 12879–12882
Substituted carboheterocyclic butane tetracarboxylate, etc., 12882–12885
PROPOSED RULES
Air quality implementation plans; approval and promulgation; various States:
Texas, 12949
Radiation protection programs:
Idaho National Engineering and Environmental Laboratory—
Transuranic radioactive waste for disposal at Waste Isolation Pilot Plant; waste characterization program documents availability, 12949–12950
Toxic substances:
Significant new uses—
Neodecaneperoxoic acid, etc., 12950–12953
NOTICES
Agency information collection activities:
Proposed collection; comment request, 12988–12990
Pesticide, food, and feed additive petitions:
Syngenta Crop Protection, Inc., 12990–12993

Executive Office of the President
NOTICES
Agency information collection activities:
Proposed collection; comment request, 12993

Federal Aviation Administration
RULES
Airworthiness directives:
CFM International, S.A.; correction, 12859
Eurocopter France, 12856–12859
Rolls-Royce, plc; correction, 12859–12860
PROPOSED RULES
Airworthiness directives:
Air Tractor, Inc., 12914–12916
Bombardier, 12908–12910
Rockwell Collins, Inc., 12910–12914
Airworthiness standards:
Special conditions—
Airbus Industrie Model A340-500/-600 airplanes, 12903–12907
NOTICES
Exemption petitions; summary and disposition, 13033–13035
Meetings:
Government/Industry Aeronautical Charting Forum, 13035–13036
Passenger facility charges; applications, etc.:
Cleveland Hopkins International Airport and Burke Lakefront Airport, OH, 13036
Lubbock International Airport, TX, 13036–13037
New Orleans International Airport, LA, 13037–13038

Federal Communications Commission
PROPOSED RULES
Radio stations; table of assignments:
Arizona, 12953

Federal Election Commission
RULES
Independent expenditure reporting, 12834–12840

Federal Energy Regulatory Commission
NOTICES
Electric rate and corporate regulation filings:
Trans-Elect, Inc., et al., 12984–12987
Environmental statements; availability, etc.:
Columbia Gas Transmission Corp., 12987
Hydroelectric applications, 12987–12988
Applications, hearings, determinations, etc.:
Colorado Interstate Gas Co., 12980–12981
Eastern Shore Natural Gas Co., 12981
Gulf South Pipeline Co., LP, 12981–12982
Minnesota Municipal Power Agency, 12982
Overthrust Pipeline Co., 12982–12983
PG&E Gas Transmission, Northwest Corp., 12983
Reliant Energy Gas Transmission Co., 12983
Southern LNG, Inc., 12983
Yakima Nation, 12984

Federal Highway Administration
RULES
Right-of-way and environment:
Real estate program administration; relocation assistance benefits, 12861–12863
NOTICES
Environmental statements; notice of intent:
Waukesha County, WI, 13038
Weber County, UT, 13038–13039

Federal Housing Finance Board
RULES
Agency regulations reorganization; technical amendments, 12841–12856

Federal Maritime Commission
NOTICES
Agreements; additional information requests:
Westbound Transpacific Stabilization Agreement, 12993–12994
Agreements filed, etc., 12993
Ocean transportation intermediary licenses:
AJ International Shipping/Logistics, Inc., et al., 12994
Inter-Connect Transportation, Inc., et al., 12994–12995

Federal Railroad Administration
NOTICES
Environmental statements; notice of intent:
Los Angeles to San Diego rail corridor, CA; passenger rail improvements, 13039–13040

Federal Reserve System
NOTICES
Banks and bank holding companies:
Formations, acquisitions, and mergers, 12995

Fish and Wildlife Service
NOTICES
Comprehensive conservation plans; availability, etc.:
Balcones Canyonlands National Wildlife Refuge, TX, 13001–13003
Endangered and threatened species:
Rio Grande cutthroat trout, 13005–13006
Endangered and threatened species and marine mammal permit applications, 13003–13004
Endangered and threatened species permit applications, 13004–13005
Marine mammal permit applications, 13006–13007
Meetings:
Battle of Midway National Memorial Advisory Committee, 13007

Food and Drug Administration
PROPOSED RULES
Food for human consumption:
Food labeling—
Raw fruits, vegetables, and fish; voluntary nutrition labeling; 20 most frequently consumed raw fruits, vegetables, and fish, identification, 12918–12937
NOTICES
Reports and guidance documents; availability, etc.:
Electronic records and signatures; time stamps, 12999

Forest Service
NOTICES
Environmental statements; notice of intent:
Medicine Bow-Routt National Forests, WY, 12958–12959
Shawnee National Forest, IL, 12960–12963
Wasatch-Cache National Forest, UT, 12963–12964
Meetings:
Opal Creek Scenic Recreation Area Advisory Council, 12964
Oregon Coast Provincial Advisory Committee, 12964–12965
Southwest Washington Provincial Advisory Committee, 12965

General Services Administration
RULES
Federal Acquisition Regulation (FAR):
Commercial items—
Solicitation/contract/order (SF 1449), 13048–13052
Contract action and contracting action; definitions, 13052–13054
Helium acquisition, 13063–13065
HUBZone Program applicability, 13064–13066
Introduction, 13047–13049
Labor clauses; application, 13065–13067
Procurement integrity rewrite, 13056–13063
Sealed bid and negotiated procurements; definitions, 13053–13057
Small entity compliance guide, 13067–13069
Technical amendments, 13066–13068
PROPOSED RULES
Federal Acquisition Regulation (FAR):
Commercial items—
Contract terms and conditions required to implement statute or Executive orders, 13075–13077
Miscellaneous cost principles, 13071–13073
Prohibited sources, 13079–13081

Health and Human Services Department
See Centers for Disease Control and Prevention
See Centers for Medicare & Medicaid Services
See Food and Drug Administration
See Health Resources and Services Administration

Health Resources and Services Administration
NOTICES
Grants and cooperative agreements; availability, etc.:
Community Access Program, 13000–13001

Historic Preservation, Advisory Council
NOTICES
Reports and guidance documents; availability, etc.:
Wherry and Capehart era housing; inventory management; program comment, 12956–12958

Immigration and Naturalization Service
NOTICES
Agency information collection activities:
Proposed collection; comment request, 13009

Indian Affairs Bureau
NOTICES
Liquor and tobacco sale or distribution ordinance:
Navajo Nation, AZ, 13007–13008

Interior Department
See Fish and Wildlife Service
See Indian Affairs Bureau
See National Park Service
RULES
Organization, functions, and authority delegations:
Hearings and Appeals Office; address change
Correction, 12885

Internal Revenue Service
RULES
Income taxes:
Hedging transactions, 12863–12871

International Trade Administration
NOTICES
Antidumping:
Circular welded non-alloy steel pipe from—
Mexico, 12965–12966
Non-malleable cast iron pipe fittings from—
China, 12966–12968
Persulfates from—
China, 12969

Committees; establishment, renewal, termination, etc.:
Industry Sector and Functional Advisory Committees for Trade Policy Matters, 12969–12970

Justice Department
See Immigration and Naturalization Service
See Justice Programs Office
See Juvenile Justice and Delinquency Prevention Office

Justice Programs Office
NOTICES
Meetings:
Public Safety Officer Medal of Valor Review Board, 13009

Juvenile Justice and Delinquency Prevention Office
NOTICES
Meetings:
Coalition for Juvenile Justice, 13009–13010

Labor Department
See Employment and Training Administration
See Pension and Welfare Benefits Administration

Morris K. Udall Scholarship and Excellence in National Environmental Policy Foundation
NOTICES
Agency information collection activities:
Proposed collection; comment request, 13021–13024

National Aeronautics and Space Administration
RULES
Federal Acquisition Regulation (FAR):
Commercial items—
Solicitation/contract/order (SF 1449), 13048–13052
Contract action and contracting action; definitions, 13052–13054
Helium acquisition, 13063–13065
HUBZone Program applicability, 13064–13066
Introduction, 13047–13049
Labor clauses; application, 13065–13067
Procurement integrity rewrite, 13056–13063
Sealed bid and negotiated procurements; definitions, 13053–13057
Small entity complinace guide, 13067–13069
Technical amendments, 13066–13068
PROPOSED RULES
Federal Acquisition Regulation (FAR):
Commercial items—
Contract terms and conditions required to implement statute or Executive orders, 13075–13077
Miscellaneous cost principles, 13071–13073
Prohibited sources, 13079–13081

National Archives and Records Administration
NOTICES
Agency records schedules; availability, 13024–13026
Nixon Presidential historical materials; opening of materials, 13026

National Council on Disability
NOTICES
Meetings:
Youth Advisory Committee, 13026–13027

National Oceanic and Atmospheric Administration
RULES
International fisheries regulations:
Pacific halibut—
Catch sharing plans, 12885–12897
NOTICES
Grants and cooperative agreements; availability, etc.:
Monitoring and Event Response for Harmful Algal Blooms Program, 12971–12976
Meetings:
Atlantic Highly Migratory Species and Atlantic Billfish Advisory Panels, 12976
New England Fishery Management Council, 12976–12977
Pacific Fishery Management Council, 12977

National Park Service
NOTICES
Native American human remains and associated funerary objects:
Effigy Mounds National Monument Harpers Ferry, IA—
Inventory from various mounds within Effigy Mounds National Monument, IA; correction, 13008–13009

Nuclear Regulatory Commission
NOTICES
Meetings:
Reactor Safeguards Advisory Committee, 13027
Reports and guidance documents; availability, etc.:
Boiling water reactors; post accident sampling requirements elimination; model application, 13027–13029
Applications, hearings, determinations, etc.:
Entergy Nuclear Operations, Inc., 13027

Pension and Welfare Benefits Administration
NOTICES
Employee benefit plans; class exemptions:
Authorized transactions between plans and parties in interest, 13019–13021

Public Health Service
See Centers for Disease Control and Prevention
See Food and Drug Administration
See Health Resources and Services Administration

Research and Special Programs Administration
NOTICES
Hazardous materials:
Exemption applications delayed; list, 13040–13041

Securities and Exchange Commission
NOTICES
Securities:
Suspension of trading—
A.C.L.N., Ltd., 13029
Self-regulatory organizations; proposed rule changes:
Chicago Board Options Exchange, Inc., 13029–13030
Municipal Securities Rulemaking Board, 13030–13031
New York Stock Exchange, Inc., 13031–13033

Social Security Administration
NOTICES
Meetings:
Ticket to Work and Work Incentives Advisory Panel; teleconferences, 13033

State Department
NOTICES
Implementation Monitoring Committee; assistance:
Burundi peace process implementation, 13033

Surface Transportation Board
NOTICES
Railroad operation, acquisition, construction, etc.:
Wisconsin & Southern Railroad Co., 13041–13042

Textile Agreements Implementation Committee
See Committee for the Implementation of Textile Agreements

Thrift Supervision Office
NOTICES
Agency information collection activities:
Proposed collection; comment request, 13044

Transportation Department
See Coast Guard
See Federal Aviation Administration
See Federal Highway Administration
See Federal Railroad Administration
See Research and Special Programs Administration
See Surface Transportation Board
See Transportation Security Administration

Transportation Security Administration
PROPOSED RULES
Aviation security infrastructure fees, 12954–12955

Treasury Department
See Customs Service
See Internal Revenue Service
See Thrift Supervision Office

Veterans Affairs Department
NOTICES
Meetings:
Education Advisory Committee, 13044–13045

Privacy Act:
Computer matching programs, 13045

Separate Parts In This Issue

Part II
Defense Department; General Services Administration; National Aeronautics and Space Administration, 13047–13069

Part III
Defense Department; General Services Administration; National Aeronautics and Space Administration, 13071–13073

Part IV
Defense Department; General Services Administration; National Aeronautics and Space Administration, 13075–13077

Part V
Defense Department; General Services Administration; National Aeronautics and Space Administration, 13079–13081

Reader Aids
Consult the Reader Aids section at the end of this issue for phone numbers, online resources, finding aids, reminders, and notice of recently enacted public laws.

To subscribe to the Federal Register Table of Contents LISTSERV electronic mailing list, go to http://listserv.access.gpo.gov and select Online mailing list archives, FEDREGTOC-L, Join or leave the list (or change settings); then follow the instructions.

CFR PARTS AFFECTED IN THIS ISSUE

A cumulative list of the parts affected this month can be found in the Reader Aids section at the end of this issue.

7 CFR
1464 12829
Proposed Rules:
1 12898

9 CFR
94 (2 documents) 12831, 12833

11 CFR
100 12834
104 12834
109 12834

12 CFR
Ch. IX 12841

14 CFR
39 (4 documents) 12856, 12858, 12859
Proposed Rules:
25 12903
39 (3 documents) 12908, 12910, 12914

16 CFR
Proposed Rules:
Ch. II 12916

19 CFR
141 12860

21 CFR
Proposed Rules:
101 12918

23 CFR
710 12861

26 CFR
1 12863
602 12863

32 CFR
Proposed Rules:
179 12937

33 CFR
100 12871
165 12873
Proposed Rules:
110 12938
165 (5 documents) 12938, 12940, 12943, 12945, 12947

40 CFR
82 12874
180 12875
721 (2 documents) 12879, 12882
Proposed Rules:
52 12949
194 12949
721 12950

43 CFR
35 12885

47 CFR
Proposed Rules:
73 12953

48 CFR
Ch. 1 (2 documents) 13048
1 (3 documents) 13049, 13053, 13067
2 (2 documents) 13054, 13057
3 (2 documents) 13054, 13057
4 13057
5 (2 documents) 13053, 13067
6 (2 documents) 13053, 13067
8 (2 documents) 13053, 13064
9 (2 documents) 13057, 13067
12 13065
14 13054
15 (2 documents) 13054, 13057
17 13053
19 (2 documents) 13053, 13065
28 13054
31 13067
32 13053
35 13054
52 (7 documents) 13053, 13054, 13057, 13064, 13065, 13066, 13067
53 13049
Proposed Rules:
2 13072
25 13080
31 13072
47 13072
52 (3 documents) 13072, 13076, 13080

49 CFR
Proposed Rules:
1511 12954

50 CFR
300 12885

Rules and Regulations

Federal Register
Vol. 67, No. 54
Wednesday, March 20, 2002

This section of the FEDERAL REGISTER contains regulatory documents having general applicability and legal effect, most of which are keyed to and codified in the Code of Federal Regulations, which is published under 50 titles pursuant to 44 U.S.C. 1510.

The Code of Federal Regulations is sold by the Superintendent of Documents. Prices of new books are listed in the first FEDERAL REGISTER issue of each week.

DEPARTMENT OF AGRICULTURE

Commodity Credit Corporation

7 CFR Part 1464

RIN 0560–AG61

Tobacco Loss Assistance Program 2001

AGENCY: Commodity Credit Corporation.

ACTION: Final rule.

SUMMARY: This final rule implements agricultural market assistance provisions of the Agriculture, Rural Development, Food and Drug Administration, and Related Agencies Appropriations Act, 2002, that relate to tobacco. This rule will mitigate the reduction in the tobacco quotas of the eligible producers.

DATES: Effective March 1, 2002.

FOR FURTHER INFORMATION CONTACT: Ann Wortham, Agricultural Program Specialist, Tobacco Branch, FSA, USDA, STOP 0514, 1400 Independence Avenue, SW, Washington, DC 20250–0540, Telephone: (202) 720–2715.

SUPPLEMENTARY INFORMATION:

Notice and Comment

Section 774 of Pub. L. 107–76 requires that the regulations necessary to implement Title VIII, Subtitle A of Pub. L. 107–76 be issued as soon as practicable and without regard to the notice and comment provisions of 5 U.S.C. 553 or the Statement of Policy of the Secretary of Agriculture effective July 24, 1971 (36 FR 13804) relating to notices of proposed rulemaking and public participation in rulemaking. This rule relates to tobacco assistance and implements the provisions of Subtitle A.

Executive Order 12866

This final rule is issued in conformance with Executive Order 12866 and has been designated as ''not significant.''

The title and number of the Federal assistance program, as found in the Catalog of Federal Domestic Assistance, to which this final rule applies is:

10.452—Disaster Reserve Assistance.

Regulatory Flexibility Act

It has been determined that the Regulatory Flexibility Act is not applicable to this rule because the United States Department of Agriculture (USDA) is not required by 5 U.S.C. 553 or any other provision of law to publish a notice of proposed rulemaking with respect to the subject matter of this rule.

Environmental Evaluation

It has been determined by an environmental evaluation that this action will have no significant impact on the quality of the human environment. Therefore, neither an environmental assessment nor an Environmental Impact Statement is needed.

Executive Order 12372

This program is not subject to the provisions of Executive Order 12372, which require intergovernmental consultation with State and local officials. See the notice related to 7 CFR part 3015, subpart V, published at 48 FR 29115 (June 24, 1983).

Unfunded Mandates

This rule contains no Federal mandates under the provisions of Title II of the Unfunded Mandates Reform Act of 1995 (UMRA) for State, local and tribal governments or the private sector. Therefore this rule is not subject to the requirements of sections 202 and 205 of the UMRA.

Paperwork Reduction Act

This rule does not impact the information collection requirements of 7 CFR 1464 approved by OMB and assigned OMB control numbers 0560–0047 and 0560–0076.

Discussion of Final Rule

This Final Rule will implement requirements of the Agriculture, Rural Development, Food and Drug Administration, and Related Agencies Appropriations Act 2002 (Pub. L. 107–76), which relate to agricultural market assistance for agricultural producers. Section 774 of Pub. L. 107–76 authorizes the Secretary of Agriculture (the Secretary) to use funds of the Commodity Credit Corporation (CCC) to make payments to eligible persons who own, control or grow tobacco on a farm for which a basic quota or allotment for eligible tobacco was established for the 2001 crop year under part I of subtitle B of title III of the Agricultural Adjustment Act of 1938. This eligibility is not affected by temporary transfers or undermarketed tobacco.

Outlays under the programs implemented by this rule will total approximately $5 million. Most tobacco operations are small family-owned affairs and to the extent that the $5 million payment to producers and quota-holders defrays tobacco production costs, the Tobacco Loss Assistance Program 2001 (TLAP01) will enhance their solvency. In the short-term, the cost to the government roughly equals the benefits paid to the producers. In the longer term, to the extent that these disaster payments protect producers from bankruptcy, the payments may stabilize the small farm economy and thereby help achieve the public policy objective of the tobacco program.

A March 1 effective date for this rule was chosen to provide flexibility in the event of a delay in publication of the rule.

List of Subjects in Part 1464

Tobacco Loans, Warehouse Losses, Reporting and record keeping requirements.

Accordingly, Title 7, Part 1464 is amended as follows:

PART 1464—TOBACCO

5. The authority citation for 7 CFR part 1464 continues to read as follows:

Authority: 7 U.S.C. 1421, 1423, 1441, 1445, 1445–1 and 1445–2; 15 U.S.C. 714b, 714c.

6. Add subpart F to read as follows:

Subpart F—Tobacco Loss Assistance Program 2001

Sec.

1464.500 [Reserved]
1464.501 Applicability and basic terms for payment.
1464.502 Administration.
1464.503 Definitions.
1464.504 Eligibility.
1464.505 Signup.
1464.506 [Reserved]
1464.507 Benefits.
1464.508 [Reserved]
1464.509 Offsets and assignments.

1464.510 Misrepresentation and scheme or device.
1464.511 [Reserved]
1464.512 Cumulative liability.
1464.513 Estate, trusts, and minors.
1464.514 Death, incompetence, or disappearance.
1464.515 Appeals.

§ 1464.500 [Reserved]

§ 1464.501 Applicability and basic terms for payment.

(a) This subpart sets forth the terms and conditions of the Tobacco Loss Assistance Program 2001 (TLAP01), authorized by Pub. L. 107–76, which provides that funds of the Commodity Credit Corporation (CCC) be made available to certain persons whose farms had established marketing quotas or allotments for the 2001 crop year.

(b) Subject to the availability of funds, payments for this program shall be divided among eligible persons as follows: 33⅓ percent of the payments will be made to quota owners; 33⅓ percent of the payments will be made to controllers; and 33⅓ percent of the payments will be made to growers.

§ 1464.502 Administration.

(a) This subpart shall be administered by CCC under the general supervision of the Executive Vice President, CCC (Administrator, FSA) and shall be carried out in the field by State and county FSA committees (State and county committees, respectively).

(b) State and county committees, and representatives and employees thereof, do not have the authority to modify or waive any of the provisions of the regulations in this part.

(c) The State committee shall take any action required by these regulations that has not been taken by the county committee. The State committee shall also:

(1) Correct, or require a county committee to correct, an action taken by such county committee that is not in accordance with the regulations of this part.

(2) Require a county committee to withhold taking any action that is not in accordance with the regulations of this part.

(d) No provision or delegation herein to a State or county committee shall preclude the Executive Vice President, CCC, or a designee or the Administrator, FSA, or a designee, from determining any question arising under the program or from reversing or modifying any determination made by a State or county committee.

(e) The Deputy Administrator for Farm Programs, FSA, may authorize State and county committees to waive or modify deadlines and other program requirements in cases where lateness or failure to meet such other requirements does not affect adversely the operation of the program.

§ 1464.503 Definitions.

The definitions set forth in this section shall be applicable for all purposes of administering the Tobacco Loss Assistance Program of this subpart. The terms defined in §§ 718.2 or 723.104 of this title shall also be applicable, except where those definitions conflict with the definitions set forth in this subpart. The following terms shall have the following meanings:

Deputy Administrator means the Deputy Administrator for Farm Programs, Farm Service Agency (FSA), or a designee.

Controller means, taking into account temporary transfers, that person or entity who, as determined by the Deputy Administrator, controls the land used to actually produce the eligible tobacco and shares in the risk of production.

Eligible person means with respect to payments under this part, a person who owns, controls, or grows tobacco on a farm for which a marketing quota or allotment was established under the Agricultural Adjustment Act of 1938 for the 2001 crop year.

Eligible tobacco means each of the following kinds of tobacco: fire-cured tobacco, comprising types 22 and 23; dark air-cured tobacco, comprising types 35 and 36; and Virginia sun-cured tobacco, comprising type 37.

Grower means person(s) or entities who provide labor to produce tobacco and share in the risk of production during the relevant period taking into account temporary transfers.

Payment pounds means the pounds of tobacco for which a person is eligible to be paid under this subpart.

Quota owner means the person or entity who, for the relevant period, owns the land for which a quota is established under the Agricultural Adjustment Act of 1938, as amended, irrespective of temporary transfers or undermarketings.

Share in the risk of production means having a direct financial stake in the success of the crop through a direct share in the actual proceeds from the actual marketing of the crop, which share is conditional upon the success of that marketing. Farm owners who lease their farm land to a tobacco grower for the right to grow tobacco on that land and receive a cash payment for such right, regardless of whether or not a tobacco crop is marketed, are not considered to share in the risk of production. Farm laborers who provide service in exchange for a wage and whose payment is not subject to the marketing of the tobacco crop are not considered to be sharing in the risk of production.

TLAP01 means the Tobacco Loss Assistance Program, for the 2001 crop, which is provided for in this subpart.

§ 1464.504 Eligibility

For a person to be considered an ''eligible person'' under this subpart, such person must own, control, or grow eligible tobacco on a farm with an established ''eligible tobacco'' marketing quota or allotment for the 2001 crop year.

§ 1464.505 Sign up.

(a) Eligible persons who wish to apply for TLAP01 funds, must file an application with the county FSA office by the date established by CCC. However, an application filed late because of hardship may be accepted. Acceptance of such applications must be approved by the Deputy Administrator, subject to the availability of funds.

(b) Data furnished by the applicants will be used to determine eligibility for program benefits. Furnishing the data is voluntary; however, without it program benefits will not be provided.

§ 1464.506 [Reserved]

§ 1464.507 Benefits.

(a) TLAP01 payments shall be made to eligible persons not later than March 31, 2002 as follows:

(1) All fire-cured, dark air-cured and Virginia sun-cured tobacco funds will be distributed one-third to quota owners; one-third to the controller; and one-third to growers.

(2) The allocated funds will be disbursed to quota owners based on the 2001 crop year basic acreage allotment multiplied by National Agricultural Statistics Service (NASS) yield, and to controllers and growers based on the 2001 crop effective allotment multiplied by the yields as specified in the authorizing legislation.

(b) The payment amount for each kind of eligible tobacco shall be equal to 10 cents per eligible payment pound distributed ⅓ to the eligible owner, ⅓ to the eligible controller (if any), and ⅓ to the eligible grower (if any). Persons who fit more than one category can accumulate shares.

(c) In the case where a payment to a farm is disputed CCC may require that all interested parties agree to the resolution of the dispute before any payment is made and may delay

payments to that farm until any such disputes are resolved. Also, so that payments may be made expeditiously in a manner that is administratively efficient, CCC may in its sole discretion exclude payments to a person who does not file a timely claim.

§ 1464.508 [Reserved]

§ 1464.509 Offsets and assignments.

(a) Any payment or portion thereof made to any person under this subpart shall be made without regard to questions of title under State law and without regard to any claim or lien against the related crop, or proceeds thereof. The regulations governing offsets and withholdings found at part 1403 of this chapter shall be applicable to payments made under this part.

(b) Eligible persons may assign TLAP01 payments as provided in part 1404 of this chapter.

§ 1464.510 Misrepresentation and scheme or device.

(a) A producer who erroneously represents any fact affecting a program determination made in accordance with this part shall not be entitled to payments and must refund all payments, plus interest determined in accordance with part 1403 of this chapter.

(b) A producer who is determined to have knowingly:

(1) Adopted any scheme or device that tends to defeat the purpose of the program;

(2) Made any fraudulent representation; or

(3) Misrepresented any fact affecting a program determination, shall refund to CCC all payments received under this subpart, plus interest determined in accordance with part 1403 of this chapter. The subject producer's interest in all applications shall be terminated.

§ 1464.511 [Reserved]

§ 1464.512 Cumulative liability.

The liability of any person for any penalty under this part or for any refund to CCC or related charge arising in connection therewith shall be in addition to any other liability of such person under any civil or criminal fraud statute or any other provision of law including, but not limited to, 18 U.S.C. 286, 287, 371, 641, 1001; 15 U.S.C. 714m; and 31 U.S.C. 3729.

§ 1464.513 Estates, trusts, and minors.

(a) Program documents executed by persons legally authorized to represent estates or trusts will be accepted only if such person furnishes evidence of the authority to execute such documents.

(b) A minor who is a producer shall be eligible for assistance under this subpart only if such person meets one of the following requirements:

(1) The right of majority has been conferred on the minor by court proceedings or by statute;

(2) A guardian has been appointed to manage the minor's property and the applicable program documents are executed by the guardian; or

(3) A bond is furnished under which the surety guarantees any loss incurred for which the minor would be liable had the minor been an adult.

§ 1464.514 Death, incompetence, or disappearance.

In the case of death, incompetence, or disappearance, of any person who is eligible to receive assistance in accordance with this part, such person or persons specified in part 707 of this title may receive such assistance.

§ 1464.515 Appeals.

The appeal, reconsideration, or review of determinations made under this part must be in accordance with parts 11 and 780 of this title. The eligibility provisions for kinds of tobacco under this subpart are not subject to appeal rights.

Signed at Washington, DC, on March 8, 2002.

James R. Little,

Executive Vice President, Commodity Credit Corporation.

[FR Doc. 02–6711 Filed 3–18–02; 9:46 am]

BILLING CODE 3410–05–P

DEPARTMENT OF AGRICULTURE

Animal and Plant Health Inspection Service

9 CFR Part 94

[Docket No. 01–131–1]

Change in Disease Status of Finland Because of BSE

AGENCY: Animal and Plant Health Inspection Service, USDA.

ACTION: Interim rule and request for comments.

SUMMARY: We are amending the regulations by adding Finland to the list of regions where bovine spongiform encephalopathy exists because the disease has been detected in a native-born animal in that country. Finland has been listed among the regions that present an undue risk of introducing bovine spongiform encephalopathy into the United States. Therefore, the effect of this action is a continued restriction on the importation of ruminants that have been in Finland and meat, meat products, and certain other products of ruminants that have been in Finland. This action is necessary in order to update the disease status of Finland regarding bovine spongiform encephalopathy.

DATES: This interim rule was effective December 7, 2001. We will consider all comments we receive that are postmarked, delivered, or e-mailed by May 20, 2002.

ADDRESSES: You may submit comments by postal mail/commercial delivery or by e-mail. If you use postal mail/commercial delivery, please send four copies of your comment (an original and three copies) to: Docket No. 01–131–1, Regulatory Analysis and Development, PPD, APHIS, Station 3C71, 4700 River Road Unit 118, Riverdale, MD 20737–1238. Please state that your comment refers to Docket No. 01–131–1. If you use e-mail, address your comment to *regulations@aphis.usda.gov.* Your comment must be contained in the body of your message; do not send attached files. Please include your name and address in your message and ''Docket No. 01–131–1'' on the subject line.

You may read any comments that we receive on this docket in our reading room. The reading room is located in room 1141 of the USDA South Building, 14th Street and Independence Avenue SW., Washington, DC. Normal reading room hours are 8 a.m. to 4:30 p.m., Monday through Friday, except holidays. To be sure someone is there to help you, please call (202) 690–2817 before coming.

APHIS documents published in the **Federal Register**, and related information, including the names of organizations and individuals who have commented on APHIS dockets, are available on the Internet at *http://www.aphis.usda.gov/ppd/rad/webrepor.html.*

FOR FURTHER INFORMATION CONTACT: Dr. Gary Colgrove, Chief Staff Veterinarian, Sanitary Issues Management Staff, National Center for Import and Export, VS, APHIS, 4700 River Road Unit 38, Riverdale, MD 20737–1231; (301) 734–4356.

SUPPLEMENTARY INFORMATION:

Background

The regulations in 9 CFR parts 93, 94, 95, and 96 (referred to below as the regulations) govern the importation of certain animals, birds, poultry, meat, other animal products and byproducts, hay, and straw into the United States in order to prevent the introduction of various animal diseases, including

bovine spongiform encephalopathy (BSE).

BSE is a neurological disease of cattle and is not known to exist in the United States. It appears that BSE is primarily spread through the use of ruminant feed containing protein and other products from ruminants infected with BSE. Therefore, BSE could become established in the United States if materials carrying the BSE agent, such as certain meat, animal products, and animal byproducts from ruminants, are imported into the United States and are fed to ruminants in the United States. BSE could also become established in the United States if ruminants with BSE are imported into the United States.

Sections 94.18, 95.4, and 96.2 of the regulations prohibit or restrict the importation of certain meat and other animal products and byproducts from ruminants that have been in regions in which BSE exists or in which there is an undue risk of introducing BSE into the United States. Paragraph (a)(1) of § 94.18 lists the regions in which BSE exists. Paragraph (a)(2) lists the regions that present an undue risk of introducing BSE into the United States because their import requirements are less restrictive than those that would be acceptable for import into the United States and/or because the regions have inadequate surveillance. Paragraph (b) of § 94.18 prohibits the importation of fresh, frozen, and chilled meat, meat products, and most other edible products of ruminants that have been in any region listed in paragraph (a)(1) or (a)(2). Paragraph (c) of § 94.18 restricts the importation of gelatin derived from ruminants that have been in any of these regions. Section 95.4 prohibits or restricts the importation of certain byproducts from ruminants that have been in any of those regions, and § 96.2 prohibits the importation of casings, except stomach casings, from ruminants that have been in any of these regions. Additionally, the regulations in 9 CFR part 93 pertaining to the importation of live animals provide that the Animal and Plant Health Inspection Service may deny the importation of ruminants from regions where a communicable disease such as BSE exists and from regions that present risks of introducing communicable diseases into the United States (see § 93.404(a)(3)).

Finland has been among the regions listed in § 94.18(a)(2), which are regions that present an undue risk of introducing BSE into the United States. However, on December 7, 2001, a case of BSE was confirmed in a native-born animal in Finland. Therefore, in order to update the disease status of Finland regarding BSE, we are amending the regulations by removing Finland from the list in § 94.18(a)(2) of regions that present an undue risk of introducing BSE into the United States and adding Finland to the list in § 94.18(a)(1) of regions where BSE is known to exist. The effect of this action is a continued restriction on the importation of ruminants that have been in Finland, meat, meat products, and certain other products and byproducts of ruminants that have been in Finland. We are making these amendments effective retroactively to December 7, 2001, which is the date that BSE was confirmed in a native-born animal in Finland.

Emergency Action

This rulemaking is necessary on an emergency basis to update the disease status of Finland regarding BSE. Under these circumstances, the Administrator has determined that prior notice and opportunity for public comment are contrary to the public interest and that there is good cause under 5 U.S.C. 553 for making this rule effective less than 30 days after publication in the **Federal Register**.

We will consider comments we receive during the comment period for this interim rule (see **DATES** above). After the comment period closes, we will publish another document in the **Federal Register**. The document will include a discussion of any comments we receive and any amendments we are making to the rule as a result of the comments.

Executive Order 12866 and Regulatory Flexibility Act

This rule has been reviewed under Executive Order 12866. For this action, the Office of Management and Budget has waived its review process required by Executive Order 12866.

We are amending the regulations by adding Finland to the list of regions where BSE exists because the disease has been detected in a native-born animal in that region. Finland has been listed among the regions that present an undue risk of introducing BSE into the United States. Regardless of which of the two lists a region is on, the same restrictions apply to the importation of ruminants and meat, meat products, and most other products and byproducts of ruminants that have been in the region. Therefore, this action, which is necessary in order to update the disease status of Finland regarding BSE, will not result in any change in the restrictions that apply to the importation of ruminants and meat, meat products, and certain other products and byproducts of ruminants that have been in Finland.

Under these circumstances, the Administrator of the Animal and Plant Health Inspection Service has determined that this action will not have a significant economic impact on a substantial number of small entities.

Executive Order 12988

This rule has been reviewed under Executive Order 12988, Civil Justice Reform. This rule: (1) Preempts all State and local laws and regulations that are inconsistent with this rule; (2) has retroactive effect to December 7, 2001; and (3) does not require administrative proceedings before parties may file suit in court challenging this rule.

Paperwork Reduction Act

This interim rule contains no information collection or recordkeeping requirements under the Paperwork Reduction Act of 1995 (44 U.S.C. 3501 *et seq.*).

List of Subjects in 9 CFR Part 94

Animal diseases, Imports, Livestock, Meat and meat products, Milk, Poultry and poultry products, Reporting and recordkeeping requirements.

Accordingly, we are amending 9 CFR part 94 as follows:

PART 94—RINDERPEST, FOOT-AND-MOUTH DISEASE, FOWL PEST (FOWL PLAGUE), EXOTIC NEWCASTLE DISEASE, AFRICAN SWINE FEVER, HOG CHOLERA, AND BOVINE SPONGIFORM ENCEPHALOPATHY: PROHIBITED AND RESTRICTED IMPORTATIONS

1. The authority citation for part 94 continues to read as follows:

Authority: 7 U.S.C. 450, 7711, 7712, 7713, 7714, 7751, and 7754; 19 U.S.C. 1306; 21 U.S.C. 111, 114a, 134a, 134b, 134c, 134f, 136, and 136a; 31 U.S.C. 9701; 42 U.S.C. 4331 and 4332; 7 CFR 2.22, 2.80, and 371.4.

§ 94.18 [Amended]

2. Section 94.18 is amended as follows:

a. In paragraph (a)(1), by adding, in alphabetical order, the word ''Finland,''.

b. In paragraph (a)(2), by removing the word ''Finland,''.

Done in Washington, DC, this 14th day of March, 2002.

Bobby R. Acord,

Administrator, Animal and Plant Health Inspection Service.

[FR Doc. 02–6692 Filed 3–19–02; 8:45 am]

BILLING CODE 3410–34–U

DEPARTMENT OF AGRICULTURE

Animal and Plant Health Inspection Service

9 CFR Part 94

[Docket No. 02–004–1]

Change in Disease Status of Austria Because of BSE

AGENCY: Animal and Plant Health Inspection Service, USDA.

ACTION: Interim rule and request for comments.

SUMMARY: We are amending the regulations by adding Austria to the list of regions where bovine spongiform encephalopathy exists because the disease has been detected in a native-born animal in that country. Austria has been listed among the regions that present an undue risk of introducing bovine spongiform encephalopathy into the United States. Therefore, the effect of this action is a continued restriction on the importation of ruminants, meat, meat products, and certain other products of ruminants that have been in Austria. This action is necessary in order to update the disease status of Austria regarding bovine spongiform encephalopathy.

DATES: This interim rule was effective December 13, 2001. We will consider all comments we receive that are postmarked, delivered, or e-mailed by May 20, 2002.

ADDRESSES: You may submit comments by postal mail/commercial delivery or by e-mail. If you use postal mail/commercial delivery, please send four copies of your comment (an original and three copies) to: Docket No. 02–004–1, Regulatory Analysis and Development, PPD, APHIS, Station 3C71, 4700 River Road Unit 118, Riverdale, MD 20737–1238. Please state that your comment refers to Docket No. 02–004–1. If you use e-mail, address your comment to *regulations@aphis.usda.gov.* Your comment must be contained in the body of your message; do not send attached files. Please include your name and address in your message and ''Docket No. 02–004–1'' on the subject line.

You may read any comments that we receive on this docket in our reading room. The reading room is located in room 1141 of the USDA South Building, 14th Street and Independence Avenue SW., Washington, DC. Normal reading room hours are 8 a.m. to 4:30 p.m., Monday through Friday, except holidays. To be sure someone is there to help you, please call (202) 690–2817 before coming.

APHIS documents published in the **Federal Register**, and related information, including the names of organizations and individuals who have commented on APHIS dockets, are available on the Internet at *http://www.aphis.usda.gov/ppd/rad/webrepor.html.*

FOR FURTHER INFORMATION CONTACT: Dr. Gary Colgrove, Chief Staff Veterinarian, Sanitary Issues Management Staff, National Center for Import and Export, VS, APHIS, 4700 River Road Unit 38, Riverdale, MD 20737–1231; (301) 734–4356.

SUPPLEMENTARY INFORMATION:

Background

The regulations in 9 CFR parts 93, 94, 95, and 96 (referred to below as the regulations) govern the importation of certain animals, birds, poultry, meat, other animal products and byproducts, hay, and straw into the United States in order to prevent the introduction of various animal diseases, including bovine spongiform encephalopathy (BSE).

BSE is a neurological disease of cattle and is not known to exist in the United States. It appears that BSE is primarily spread through the use of ruminant feed containing protein and other products from ruminants infected with BSE. Therefore, BSE could become established in the United States if materials carrying the BSE agent, such as certain meat, animal products, and animal byproducts from ruminants, were to be imported into the United States and fed to ruminants in the United States. BSE could also become established in the United States if ruminants with BSE were imported into the United States.

Sections 94.18, 95.4, and 96.2 of the regulations prohibit or restrict the importation of certain meat and other animal products and byproducts from ruminants that have been in regions in which BSE exists or in which there is an undue risk of introducing BSE into the United States.

Paragraph (a)(1) of § 94.18 lists the regions in which BSE exists. Paragraph (a)(2) lists the regions that present an undue risk of introducing BSE into the United States because their import requirements are less restrictive than those that would be acceptable for import into the United States and/or because the regions have inadequate surveillance. Paragraph (b) of § 94.18 prohibits the importation of fresh, frozen, and chilled meat, meat products, and most other edible products of ruminants that have been in any region listed in paragraph (a)(1) or (a)(2). Paragraph (c) of § 94.18 restricts the importation of gelatin derived from ruminants that have been in any of these regions. Section 95.4 prohibits or restricts the importation of certain byproducts from ruminants that have been in any of those regions, and § 96.2 prohibits the importation of casings, except stomach casings, from ruminants that have been in any of these regions. Additionally, the regulations in 9 CFR part 93 pertaining to the importation of live animals provide that the Animal and Plant Health Inspection Service may deny the importation of ruminants from regions where a communicable disease such as BSE exists and from regions that present risks of introducing communicable diseases into the United States (see § 93.404(a)(3)).

Austria has been among the regions listed in § 94.18(a)(2), which are regions that present an undue risk of introducing BSE into the United States. However, on December 13, 2001, a case of BSE was confirmed in a native-born animal in Austria. Therefore, in order to update the disease status of Austria regarding BSE, we are amending the regulations by removing Austria from the list in § 94.18(a)(2) of regions that present an undue risk of introducing BSE into the United States and adding Austria to the list in § 94.18(a)(1) of regions where BSE is known to exist. The effect of this action is a continued restriction on the importation of ruminants, meat, meat products, and certain other products and byproducts of ruminants that have been Austria. We are making these amendments effective retroactively to December 13, 2001, which is the date that BSE was confirmed in a native-born animal in Austria.

Emergency Action

This rulemaking is necessary on an emergency basis to update the disease status of Austria regarding BSE. Under these circumstances, the Administrator has determined that prior notice and opportunity for public comment are contrary to the public interest and that there is good cause under 5 U.S.C. 553 for making this rule effective less than 30 days after publication in the **Federal Register**.

We will consider comments we receive during the comment period for this interim rule (see **DATES** above). After the comment period closes, we will publish another document in the **Federal Register**. The document will include a discussion of any comments we receive and any amendments we are making to the rule as a result of the comments.

Executive Order 12866 and Regulatory Flexibility Act

This rule has been reviewed under Executive Order 12866. For this action, the Office of Management and Budget has waived its review process required by Executive Order 12866.

We are amending the regulations by adding Austria to the list of regions where BSE exists because the disease has been detected in a native-born animal in that region. Austria has been listed among the regions that present an undue risk of introducing BSE into the United States. Regardless of which of the two lists a region is on, the same restrictions apply to the importation of ruminants and meat, meat products, and most other products and byproducts of ruminants that have been in the region. Therefore, this action, which is necessary in order to update the disease status of Austria regarding BSE, will not result in any change in the restrictions that apply to the importation of ruminants and meat, meat products, and certain other products and byproducts of ruminants that have been in Austria.

Under these circumstances, the Administrator of the Animal and Plant Health Inspection Service has determined that this action will not have a significant economic impact on a substantial number of small entities.

Executive Order 12988

This rule has been reviewed under Executive Order 12988, Civil Justice Reform. This rule: (1) Preempts all State and local laws and regulations that are inconsistent with this rule; (2) has retroactive effect to December 13, 2001; and (3) does not require administrative proceedings before parties may file suit in court challenging this rule.

Paperwork Reduction Act

This interim rule contains no information collection or recordkeeping requirements under the Paperwork Reduction Act of 1995 (44 U.S.C. 3501 *et seq.*).

List of Subjects in 9 CFR Part 94

Animal diseases, Imports, Livestock, Meat and meat products, Milk, Poultry and poultry products, Reporting and recordkeeping requirements.

Accordingly, we are amending 9 CFR part 94 as follows:

PART 94—RINDERPEST, FOOT-AND-MOUTH DISEASE, FOWL PEST (FOWL PLAGUE), EXOTIC NEWCASTLE DISEASE, AFRICAN SWINE FEVER, HOG CHOLERA, AND BOVINE SPONGIFORM ENCEPHALOPATHY: PROHIBITED AND RESTRICTED IMPORTATIONS

1. The authority citation for part 94 continues to read as follows:

Authority: 7 U.S.C. 450, 7711, 7712, 7713, 7714, 7751, and 7754; 19 U.S.C. 1306; 21 U.S.C. 111, 114a, 134a, 134b, 134c, 134f, 136, and 136a; 31 U.S.C. 9701; 42 U.S.C. 4331 and 4332; 7 CFR 2.22, 2.80, and 371.4.

§ 94.18 [Amended]

2. Section 94.18 is amended as follows:

a. In paragraph (a)(1), by adding, in alphabetical order, the word ''Austria,''.

b. In paragraph (a)(2), by removing the word ''Austria,''.

Done in Washington, DC, this 14th day of March, 2002.

Bobby R. Acord,

Administrator, Animal and Plant Health Inspection Service.

[FR Doc. 02–6693 Filed 3–19–02; 8:45 am]

BILLING CODE 3410–34–U

FEDERAL ELECTION COMMISSION

11 CFR Parts 100, 104, and 109

[Notice 2002–3]

Independent Expenditure Reporting

AGENCY: Federal Election Commission.

ACTION: Final rules and transmittal of regulations to Congress.

SUMMARY: The Federal Election Commission is revising its regulations to implement statutory changes to the deadlines for filing certain reports of independent expenditures. Under the new law, reports of last minute independent expenditures (''24-hour reports'') must be actually received by the Commission or the Secretary of the Senate's office within 24 hours of the time the independent expenditure was made. To assist those who must meet this new reporting deadline, the revised rules allow reports of last minute independent expenditures to be filed by facsimile machine or electronic mail, unless the filer participates in the Commission's electronic filing program. Electronic filers must continue to file all reports of independent expenditures (24-hour reports as well as regularly scheduled reports) using the Commission's electronic filing system. Further information is provided in the supplementary information that follows.

DATES: Further action, including the announcement of an effective date, will be taken after these regulations have been before Congress for 30 legislative days. 2 U.S.C. 438(d). A document announcing the effective date will be published in the **Federal Register**.

FOR FURTHER INFORMATION CONTACT: Ms. Rosemary C. Smith, Assistant General Counsel, or Ms. Cheryl Fowle, Attorney, 999 E Street, NW., Washington, DC 20463, (202) 694–1650 or (800) 424–9530.

SUPPLEMENTARY INFORMATION: The Commission is issuing revised regulations at 11 CFR 100.19, 104.4, 104.5, 104.14, 104.18, 109.1 and 109.2. These revised rules implement Public Law 106–346 (Department of Transportation and Related Agencies Appropriations Act, 2001, 114 Stat. 1356 (2000)), which amended the Federal Election Campaign Act of 1971, 2 U.S.C. 431 *et seq.,* (''the Act'' or ''FECA''). Paragraphs (b) and (c) of 2 U.S.C. 434 require political committees and other persons making independent expenditures to file reports or statements if their independent expenditures exceed $250. In addition, if independent expenditures of $1,000 or more are made less than twenty (20) days but more than twenty-four (24) hours before the day of an election, an additional statement must be filed within 24 hours. Public Law 106–346 required, *inter alia,* the Commission to issue rules requiring that reports of independent expenditures made less than twenty (20) days but more than twenty-four (24) hours before an election (''24-hour reports'') be *received* by the Commission or the Secretary of the Senate, as appropriate,[1] within 24 hours of the time the independent expenditure was made. The statutory change permits those who must file 24-hour reports to do so using facsimile machines or electronic mail, except for those required to file electronically (*see* 11 CFR 104.18). In addition to their 24-hour reports, persons other than political committees may file by fax or e-mail other reports of independent expenditures in accordance with the regular filing schedule (*see* 11 CFR 104.5). Public Law 106–346 also requires the Commission to provide methods of verification of documents (other than requiring a signature on the document) for all purposes, including submission under penalty of perjury. These new filing methods are intended

[1] The Secretary of the United States Senate Office of Public Records is the proper recipient of reports of independent expenditures that either support or oppose only candidates for the United States Senate. 11 CFR 104.4(c)(2).

to speed up disclosure and to provide political committees and other filers with more flexibility in choosing methods of compliance with reporting requirements. The new law requires these methods to be in place for elections occurring after January 1, 2001, subject to regulations to be promulgated by the Commission.

In addition to the amendments regarding independent expenditures, the new law also requires the Commission to amend its regulations to exclude from the definition of ''contribution'' loans that candidates receive from brokerage accounts, lines of credit, or other credit instruments as long as the loans were made under commercially reasonable terms and were from a source that provides such loans in the normal course of business. That topic is being addressed in a separate rulemaking. *See* Notice of Proposed Rulemaking, 65 **Federal Register** 38576 (Wednesday, July 25, 2001).

Before final promulgation of any rules or regulations to carry out the provisions of Title 2 of the United States Code, the Commission transmits the rules or regulations to the Speaker of the House of Representatives and the President of the Senate for a thirty legislative day review period. 2 U.S.C. 438(d). These rules on independent expenditure reporting were transmitted to Congress on March 15, 2002.

Explanation and Justification

The Commission published a Notice of Proposed Rulemaking (''NPRM'') in the **Federal Register** on May 9, 2001, 65 FR 23628 (May 9, 2001). The NPRM contained proposed rules at 11 CFR 100.19, 104.4, 104.5, 104.15, 109.1 and 109.2 regarding, *inter alia,* when 24-hour reports are considered filed, the filing of 24-hour reports by facsimile machine or electronic mail, and a definition of when an independent expenditure is made. Additionally, the NPRM explicitly recognized that authorized committees may file reports of last-minute contributions (48-hour notices) using facsimile machines or the Commission's web site.

The comment period ended on June 8, 2001. The Commission received one written comment from the James Madison Center for Free Speech (''Madison Center'').

Section 100.19 File, filed or filing (2 U.S.C. 434(a))

The Commission's regulations at 11 CFR 100.19 define *file, filed,* and *filing.* The introductory text of this section states that a document is considered filed if it is: (a) Delivered to the appropriate filing office of the appropriate office, (b) sent by registered or certified mail and postmarked by midnight of the prescribed filing date—except for pre-election reports, or (c) electronically filed, and received and validated by the Commission's electronic filing system on or before 11:59 p.m. eastern time on the prescribed filing date. For clarification, the Commission has added a definition of ''document'' which mirrors the definition in the electronic filing regulations (11 CFR 104.18). A document is any report, statement, notice or designation required by the Act to be filed with the Commission or the Secretary of the Senate.

Paragraph (a) of this section states that a document is timely filed upon delivery to the Commission or Secretary of the Senate, as appropriate, by the close of the prescribed filing date. As explained below, revised paragraph (a) clarifies that the definition of ''timely filed'' is different for paper filers and electronic filers.

Under paragraph (b) of section 100.19 of the previous regulations, 24-hour reports were considered timely filed if they were deposited at a Post Office and were postmarked for certified or registered mail within 24 hours of the time the independent expenditure was made. Under Public Law 106–346 and the revised regulations at paragraph (b), 24-hour reports will only be considered timely filed if they are received by the Commission or Secretary of the Senate within 24 hours of the time the expenditure was made. Thus, sending 24-hour reports by mail will no longer be a viable option because it is unlikely that these reports will be received by the Commission within 24 hours of the making of the expenditure.

New paragraph (d) of section 100.19 defines ''timely filed'' with regard to 24-hour reports of independent expenditures. The new paragraph states that such reports are timely filed when they are received by the Commission or the Secretary of the Senate after a disbursement is made, or a debt reportable under 11 CFR 104.11(b) is incurred, for the independent expenditure, but no later than 24 hours from the time the independent expenditure is made. The new paragraph also states that such 24-hour reports may be filed by facsimile machine or electronic mail, in addition to other permissible means of filing (*e.g.,* hand delivery or overnight courier).

New paragraph (e) expressly incorporates the Commission's practice of allowing authorized committees to file their reports of contributions of $1,000 or more made less than twenty (20) days but more than forty-eight (48) hours before the day of an election (48-hour reports) using a fax machine or the Commission's web site. This change does not stem from Pub. L. 106–346. Rather, the Commission has for some time allowed authorized committees (if they are not electronic filers) to file these reports by facsimile machine in addition to other permissible filing methods. *See* Advisory Opinion (''AO'') 1988–32. In the fall of 2000, the Commission began allowing all authorized committees who file with the Commission (including electronic filers) to file 48-hour reports on-line through the Commission's web site. Note that 48-hour reports filed with the Secretary of the Senate cannot be filed using the on-line program at the Commission's web site. They can, however be filed by fax to the Secretary of the Senate. New paragraph (e) of 11 CFR 100.19 specifically incorporates those filing methods in the regulations. The Commission received no comments on this section.

Note that the final rules differ from the rule proposed in the NPRM with regard to the web based filing of 48-hour reports. The proposed rule stated that only those who do not file electronically could use the Web based filing system implemented in the autumn of 2000. The Commission currently allows electronic filers to file 48 hour reports using either the electronic filing program or on the Commission's web site. Thus the final rules allow all authorized committees (including those who participate in the electronic filing program) to file their 48-hour notices using the Commission's web site.

Section 104.4 Independent Expenditures by Political Committees (2 U.S.C. 434(c))

The Commission's regulations at 11 CFR 104.4 set forth the requirements for political committees reporting independent expenditures. Paragraph (b) of this section is being revised in three respects. First, this paragraph is being revised to state that 24-hour reports must be *received* by the appropriate officers (the Commission or Secretary of the Senate) within 24 hours of the time the independent expenditure is made. Such reports were previously timely if they were postmarked as certified or registered mail within 24 hours of the making of the independent expenditure.

Second, to enable filers to meet the new deadline, amended paragraph (b) of section 104.4 permits political committees to file 24-hour reports by facsimile machine or electronic mail, as

long as the filer is not part of the electronic filing program under 11 CFR 104.18.

Third, section 104.4(b) is being modified to make it easier for political committees to certify the independence of the expenditures falling under this paragraph. Schedule E contains a notarized certification under penalty of perjury as to whether the committee's expenditures were ''coordinated'' with any candidate, authorized committee or agent thereof, and, if the independent expenditures were made by a corporation, that the maker is a qualified nonprofit corporation (*see* 11 CFR 114.10). No other campaign finance reports filed with the Commission or the Secretary of the Senate need to be notarized.

Public Law 106–346 at § 502(a) requires the Commission to create methods, other than by requiring a signature on the document, of verifying the independent expenditure certification on 24-hour reports for all purposes, including penalties of perjury. Consequently, the revised regulations allow the 24-hour report filer to verify the report using self-verification. This means that Schedule E no longer needs to be notarized. Instead, the political committee must self-verify the document using either a handwritten signature of the treasurer on a paper document or by typing the treasurer's name on e-mailed documents. The Commission intends to make the appropriate conforming amendments to Schedule E after the promulgation of these rules. This will extend self-verification to all reports of independent expenditures, including those made before the 20th day before the election and those that exceed $250 but are under $1000.

New paragraphs (b) (1) and (2) of 11 CFR 104.4 set forth two methods for verifying 24-hour reports of independent expenditures. Paper reports (*e.g.,* filed by hand delivery or fax machine), must be verified by the filer's signature under the certification of independence. Reports filed by electronic mail must be verified by the filer typing his or her name under the certification.

As an alternative to self-verification, the NPRM sought comments on retaining the notarization requirement for faxed reports and requiring electronic notarizations for e-mailed reports. Additionally, the Commission sought comments on using digital signatures verified by a ''Trusted Third Party'' for e-mailed reports. Digital signatures utilize a Public Key Infrastructure. That structure uses Public and Private Keys to encode a message and to provide a method of positively identifying the sender. The Commission received no comments addressing this topic or offering other possible methods of verification.

The revised regulations remove the notarization requirement for several reasons. First, the statute simply requires verification, not notarization. Second, no other reports filed with the Commission require notarization. Third, the statement that the filer must sign carries the penalty for perjury if falsely made.

The Commission decided not to institute electronic notarization or digital signatures because they, as relatively new technologies, are not widespread enough to ensure access to everyone who might make an independent expenditure. For example, only a handful of states have electronic notarization statutes, effectively leaving citizens of other states without means of verification. Digital signatures must be purchased and, generally, require the purchaser to have a computer on which the private key (a computer generated string of digits) resides. The Commission is concerned that such a requirement would unduly burden the making or reporting of independent expenditures by those who do not have access to these means of verification.

Section 104.5 Filing Dates (2 U.S.C. 434(a)(2))

Section 104.5 sets forth the required filing dates for each type of political committee and other individuals. The Commission is revising paragraph (f) of this section to follow new paragraph (e) of 11 CFR 100.19 discussed above.

Revised paragraph (g) of 11 CFR 104.5 states that 24-hour reports of independent expenditures must be received by the appropriate officers within 24 hours of the making of the independent expenditure. Previously, 24-hour reports were considered timely filed when they were postmarked to be sent by registered or certified mail. This change conforms to the amendments to 11 CFR 100.19 and 104.4(b) discussed above.

The Commission received no comments on the amendments to this section.

Section 104.14 Formal Requirements Regarding Reports and Statements

Under 11 CFR 104.14, reports and statements must be signed. Two conforming amendments are being made to paragraph (a) of this section. First, new paragraph (a)(1) provides that reports or statements of independent expenditures filed by facsimile machine or electronic mail under 11 CFR 104.4(b) or 11 CFR 109.2 must be verified in accordance with those sections. Secondly, new paragraph (a)(2) states that reports, designations or statements filed electronically under 11 CFR 104.18 must follow the signature requirements of 11 CFR 104.18(g). The Commission received no comments on this section.

Section 104.18 Electronic Filing of Reports (2 U.S.C. 432(d) and 434(a)(11))

Under the previous regulations at 11 CFR 104.18(h), those participating in the Commission's electronic filing program (either mandatory or voluntary) were required to file FEC Form 5 or Schedule E electronically accompanied by a paper copy in order to file a notarized document.

Public Law 106–346 does not allow electronic filers to use fax machines or electronic mail to file their independent expenditures reports. In order to afford all electronic filers the ability to comply with the new requirement that 24-hour reports be received by the appropriate office within 24 hours, the Commission is removing Schedule E and FEC Form 5 from the list in paragraph (h) of reports that require a paper follow-up. Instead, the revised rules require those in the electronic filing program to verify all reports of independent expenditures using the same process they use in filing any other report. Paragraph (h) is being reorganized to clarify which paper documents must accompany electronically filed reports, and when those paper copies must be filed.

The Commission's electronic filing software, FECFile, currently creates Schedule E for electronic filing by political committees. The Commission's electronic filing system accepts FEC Form 5 if created by another entity using the Commission's specifications (available on the FEC web site, www.fec.gov), but FECFile does not currently create Form 5. The Commission intends to make FEC Form 5 available in the FECFile software package. Note that this software is available for free from the Commission.

Further, the Commission is adding to the list of electronic filings that require paper follow-up Schedule C–P–1, used by Presidential candidates to report loans and lines of credit from lending institutions. Like Schedule C–1 (used by non-Presidential committees), Schedule C–P–1 requires the lending institution agent's signature.

On July 25, 2001, the Commission published in the **Federal Register** a Notice of Proposed Rulemaking on Brokerage Loans and Lines of Credit (65 FR 38576 (July 25, 2001)) which sought comments on further revisions to 11

CFR 104.18(h). Thus, additional changes to this section may be promulgated at a later time as part of that separate rulemaking.

Section 109.1 Definitions (2 U.S.C. 432(17))

Section 109.1 of the Commission's regulations contains definitions relevant to independent expenditures. Public Law 106–346 and the revised regulations at 11 CFR 100.19(d), 104.4(b), 104.5(g), and 109.2(b) require 24-hour reports to be received by the Commission or the Secretary of the Senate within 24 hours of the time the independent expenditure is made.

The NPRM sought comments on a three-pronged definition of when an independent expenditure is *made* that would apply to all independent expenditures, not just those reported on a 24-hour basis. That definition was taken from the statutory and regulatory definitions of ''independent expenditure'' (2 U.S.C. 431(17) and 11 CFR 100.8(a)(2)) and ''expenditure'' (2 U.S.C. 431(9)(A) and 11 CFR 109.1). Proposed new paragraph (f) of 11 CFR 109.1 stated that an independent expenditure is made at the earliest of three possible times: (1) The date on which a written contract, including a media contract, promise or agreement to make an independent expenditure is executed; (2) the first date on which the communication is printed, broadcast, or otherwise publicly disseminated; or (3) the date on which the person making the independent expenditure pays for it.

The sole commenter on this rulemaking objects to proposed paragraph (f) for several reasons. First, the commenter argues that the definition is a substantive change to the current provisions of the FECA and is, therefore, outside the Commission's regulatory authority. The commenter also asserts that the definition is illogical and that an independent expenditure is not made until the communication is disseminated to the public. Thus, the commenter argues, prong number one of the definition is incorrect.

The Commission believes that a legal basis arguably would exist for the first prong of its definition of ''made''. Language in the FECA states that an ''independent expenditure is an expenditure'' (2 U.S.C. 431(17)). An expenditure includes a ''written contract, promise, or agreement to make an expenditure'' (2 U.S.C. § 431(9)(A)(ii)). Thus, independent expenditures necessarily include written contracts, promises or agreements to make an expenditure for a communication. Nonetheless, here the Commission is called upon to define when an independent expenditure should be considered ''made'' for purposes of reporting. Some practical and policy considerations come into play.

The Commission is dropping from the final rules the first prong of the test (the date on which a written contract, including a media contract, promise or agreement to make an independent expenditure, is executed). This will simplify the reporting rules, address the practical problem of reporting such transactions as independent expenditures and ensure that the relatively detailed rules on reporting debts at 11 CFR 104.11 apply only to political committees. Those latter rules require a debt (which includes a written contract debt) to be reported only if it exceeds $500 or is for any amount that has been outstanding for more than 60 days.

The commenter also objects to the second prong of the proposed rule at 11 CFR 109.1(f)(2), which stated that an independent expenditure would be made ''on the first date on which the communication is printed, broadcast or otherwise publicly disseminated.'' The commenter objects to the word ''printed'' on the grounds that fliers could be printed and sit in a garage for months, and thus not being publicly disseminated. The Commission is changing the word ''printed'' to ''published'' in the final rules to remove any confusion as to when a communication for an independent expenditure is made.

The commenter further objects to what it believes to be a consequence of the revised regulation which would, in some instances, require disclosure before publication of the communication. The commenter expresses concern that this could lead to mischievous interference with communications from opposing campaigns. The commenter argues that such disclosure would allow incumbents the advantage of knowing when independent expenditures have been made on behalf of their opponents, thus giving them the opportunity to convince broadcasters not to run the advertisements in question.

While the Commission does not necessarily agree with the commenter's legal analysis, the Commission is dropping the third prong of the proposed definition. New paragraph (f) of the final regulations states that an independent expenditure is made on the first date on which the communication is published, broadcast or otherwise publicly disseminated. New language in 11 CFR 104.4(b), 104.5(g) and 109.2(b) would, however, allow persons to report an independent expenditure before the underlying communication is publicly disseminated, notwithstanding other regulations (11 CFR 104.11(b) or 104.3(b)) that could fairly be read to require earlier disclosure. The statutory change for 24-hour reports reflects Congressional intent to emphasize and ensure timely disclosure of independent expenditures. Consequently, the final rules will enhance timely disclosure by requiring that independent expenditures be reported after a disbursement is made, or a debt reportable under 11 CFR 104.11(b) is incurred, for an independent expenditure but no later than 24 hours after the time they are first publicly disseminated. Note that independent expenditures that are mailed to their intended audiences are publicly disseminated at the time that they are relinquished to the U.S. Post Office.

Examples for Political Committees

In some situations, a political committee will not make payment or incur a reportable debt before the communication underlying the independent expenditure is publicly disseminated. If the communication is both publicly disseminated and paid for in the same reporting period, then the committee reports the independent expenditure on Schedule E for that reporting period. If the communication is aired in one reporting period (e.g., during the 24-hour reporting period) and payment is made in a later reporting period (e.g., during the post-general election period), then the committee reports the independent expenditure as a memo entry on Schedule E during the reporting period in which the communication is publicly disseminated and reports it again as a positive entry on Schedule E in the reporting period in which payment is made.

In other situations, however, a political committee may pay the production and distributions costs associated with an independent expenditure in one reporting period, but not publicly disseminate it until a later reporting period. In this case, the committee reports the payment as a disbursement on Schedule B for operating expenditures. When, in a subsequent reporting period, the communication is publicly disseminated, the committee files a Schedule E for the independent expenditure referencing the earlier Schedule B transaction. The committee also reports the disbursement for the independent expenditure as a negative entry on Schedule B so the total

disbursements are not inflated. Alternatively, if the committee wishes to disclose the independent expenditure before the communication is publicly disseminated, it could report the independent expenditure on Schedule E for the reporting period in which the payment is made, with no further reporting obligation at the time the communication is disseminated.

Obligations incurred but not yet paid (that are reportable debts), must be reported on Schedule D. When, in a subsequent reporting period, the communication is publicly disseminated, the committee must file a Schedule E referencing the debt on Schedule D. The committee must continue to report the debt on Schedule D (and any payment on it on Schedule E), until the debt is extinguished.

Example 1: Committee A makes a $10,000 payment on October 5 for a newspaper ad urging the defeat of Candidate X, where the ad will run on the 10th day before the November general election (i.e., during the 24 hour reporting period). The committee reports the payment on Schedule B for Operating Expenditures for its pre-general election report. The committee must file a 24-hour report on Schedule E no later than 24 hours after the ad was first published. Further, on its post-general election report, the committee must report the independent expenditure on Schedule E and report the disbursement for the independent expenditure as a negative entry on Schedule B for Operating Expenditures. Alternatively, the committee could report the independent expenditure on Schedule E for its pre-general election report with no further reporting obligation during the 24-hour and post-general reporting periods.

Example 2: In September, Committee B, a quarterly filer, enters a contract, but does not pay, for a mailing containing an independent expenditure supporting candidate X. The cost of the mailing is $450. Because the debt is less than $500, and has been outstanding for less than 60 days, it is not reportable on Schedule D of the committee's third quarter report. The mailing is delivered to a U.S. Post Office on October 5 (during the pre-general reporting period). Committee B reports the independent expenditure on a 12-day pre-general election report as a Memo Schedule E, using October 5 as the date. Payment is made on November 1. No 24-hour report is needed, because the independent expenditure was distributed before the 20 day before the general election. On the post-general election report, Committee B reports the payment as a positive entry on Schedule E and includes a cross-reference to the Memo Schedule E entry on the 12-day pre-general report.

Example 3: Committee C, a monthly filer, contracts in August for airtime to begin on October 31, five days before the November 5 general election. The costs of producing the ads and the airtime will exceed $500, but no payment is actually made during the August, September, or pre-general reporting periods. These amounts are reportable as debts on Schedule D. The ads run from October 31 through November 2. Payment is made on November 1. Committee C files a 24-hour report of independent expenditures on Memo Schedule E to be received by the Commission or the Secretary of the Senate, as appropriate, within 24 hours of the first time the ad ran on October 31. This Memo Schedule E uses October 31 as the date of the independent expenditure and includes the committee's best estimate of the total cost as the amount. (In this case, the exact amount would be known as of November 1.) The committee, on its post-general election report, shows the November 1 payment to extinguish the debt on Schedule D and also reports the independent expenditure payment as a positive disbursement on Schedule E so the line totals on the Detailed Summary Page will be accurate.

Examples for Persons Other Than Political Committees

Persons other than political committees simply report their independent expenditures on FEC Form 5 or by letter (if they are not required to file electronically). If the independent expenditure is first distributed during the 24-hour reporting period (less than 20 days but more than 24 hours before an election), it must be reported no later than 24 hours after the first time the ad is distributed. If the independent expenditure is first publicly disseminated outside the 24-hour reporting period, it must be reported no later than by the end of the regular reporting period during which the ad is first distributed.

Example 4: Mr. Jones takes out a newspaper ad supporting Candidate X. The ad runs October 4th through October 7th in an election year. Mr. Jones must report the independent expenditure no later than 24 hours after the time the ad first runs on October 4th.

Section 109.2 Reporting of Independent Expenditures by Persons Other Than a Political Committee (2 U.S.C. 434(c)).

Section 109.2 of the Commission's regulations requires persons other than political committees to report their independent expenditures on either FEC Form 5 or in a signed statement containing certain information about the person who made the independent expenditure and about the nature of the expenditure itself. Under the previous regulations, regardless of whether the filer reported the independent expenditure on Form 5 or in a signed statement, the report had to be notarized. As discussed in the Explanation and Justification for 11 CFR 104.4 above, the revised regulations no longer require notarization of reports of independent expenditures, but do require filers to self-verify their reports. Accordingly, the introductory text of paragraphs (a) and (a)(1) of section 109.2 is being revised to change the signature requirement on reports of independent expenditures to the verification of reports of independent expenditures. To implement the self-verification, the amendments to 11 CFR 109.2(a)(1)(v) require that persons other than political committees continue to include a prescribed statement of certification as to the independence of the expenditure. The Commission intends to make conforming amendments to FEC Form 5 at a later point.

The NPRM proposed adding new paragraph (a)(1)(vi) to section 109.2 (and renumbering paragraph (a)(1)(vi) as (a)(1)(vii)). Proposed paragraph (a)(1)(vi) would have required those who file a statement instead of FEC Form 5 to certify that the expenditure was not made to finance, disseminate, distribute or republish campaign materials prepared by a candidate or a candidate's agent or authorized committee. This statement is in addition to the statement of independence required in 11 CFR 109.2(a)(1)(v), discussed above. While this ''republication statement'' has long been included in the certification on FEC Form 5 (and on Schedule E, filed by political committees), it has not been required of those who file by letter. The NPRM further noted, that, on the other hand, the statutory certifications required by 2 U.S.C. 434(b)(6)(B)(iii) and (c)(2)(A) do not address distribution of candidate-prepared materials. Consequently, comments were requested on not adding the certification statement to paragraph (a)(1)(vi) and removing that part of the certification from FEC Form 5 and Schedule E. The commenter did not address this issue.

The Commission has decided to remove the ''republication statement'' from FEC Form 5 and Schedule E, and to not include it in revised 11 CFR 109.2. A statement regarding republication of candidate materials is not specifically mentioned in 2 U.S C. 434(b)(6)(B)(iii) or (c)(2). Corresponding changes will be made to FEC Form 5 and Schedule E.

Conforming changes are being made to paragraph (b) of section 109.2 to indicate that 24-hour reports must be received after a disbursement is made for an independent expenditure, but no later than 24 hours from the time the independent expenditure is made.

New paragraph (c) of 11 CFR 109.2 sets forth the acceptable methods of verification for both e-mailed and paper reports. Note that faxed reports are considered to be filed on paper and must contain the certification statement

required by 11 CFR 109.2(a)(i) and new paragraph (a)(vi) followed by the signature of the filer. Electronically mailed reports must contain the certification statements and information required by 11 CFR 109.2(a)(i) through (a)(vii) followed by the typewritten name of the filer. The Commission received no comments on these amendments.

Certification of No Effect Pursuant to 5 U.S.C. 605(b) (Regulatory Flexibility Act)

The Commission certifies that these final rules will not have a significant economic impact on a substantial number of small entities. The basis of this certification is that the Commission is providing most filers with less than $50,000 of activity with additional means of complying with the law, thereby increasing the filers' flexibility by allowing them to choose the most convenient and cost effective filing method. These additional filing methods will likely reduce costs for small entities.

List of Subjects

11 CFR Part 100

Elections.

11 CFR Part 104

Campaign funds, Political committees and parties, Reporting and recordkeeping requirements.

11 CFR Part 109

Elections, Reporting and recordkeeping requirements.

For the reasons set out in the preamble, subchapter A of chapter I of title 11 of the *Code of Federal Regulations* is amended to read as follows:

PART 100—SCOPE AND DEFINITIONS (2 U.S.C. 431)

1. The authority citation for part 100 is revised to read as follows:

Authority: 2 U.S.C. 431, 434(a)(11), 434(c) and 438(a)(8).

2. Section 100.19 is revised to read as follows:

§ 100.19 File, filed or filing (2 U.S.C. 434(a)).

With respect to documents required to be filed under 11 CFR parts 101, 102 104, 105, 107, 108 and 109, and any modifications or amendments thereto, the terms *file, filed*, and *filing* mean one of the actions set forth in paragraphs (a) through (e) of this section. For purposes of this section, document means any report, statement, notice or designation required by the Act to be filed with the Commission or the Secretary of the Senate.

(a) Except for documents electronically filed under paragraph (c) of this section, a document is timely filed upon delivery to the Federal Election Commission, 999 E Street, NW., Washington, DC 20463; or the Secretary of the United States Senate, Office of Public Records, 119 D Street NE., Washington, DC 20510 as required by 11 CFR part 105, by the close of business on the prescribed filing date.

(b) A document other than a 24-hour report of an independent expenditure under 11 CFR 104.4(b) or 109.2(c) is timely filed upon deposit as registered or certified mail in an established U.S. Post Office and postmarked no later than midnight of the day of the filing date, except that pre-election reports so mailed must be postmarked no later than midnight of the fifteenth day before the date of the election. Documents sent by first class mail must be received by the close of business on the prescribed filing date to be timely filed.

(c) For electronic filing purposes, a document is timely filed when it is received and validated by the Federal Election Commission at or before 11:59 p.m., Eastern Standard/Daylight Time, on the filing date.

(d) A 24-hour report of independent expenditures under 11 CFR 104.4(b) or 109.2(c) is timely filed when it is received by the appropriate filing officer as listed in 11 CFR 104.4(c) after a disbursement is made, or, in the case of a political committee, a debt reportable under 11 CFR 104.11(b) is incurred, for an independent expenditure, but no later than 24 hours from the time the independent expenditure was made. In addition to other permissible means of filing, a 24-hour report may be filed using a facsimile machine or by electronic mail if the filer is not required to file electronically in accordance with 11 CFR 104.18.

(e) In addition to other permissible means of filing, authorized committees that are not required to file electronically may file 48-hour notifications of contributions using facsimile machines. All authorized committees that file with the Commission, including electronic filers, may use the Commission's web site's on-line program to file 48-hour notifications of contributions. See 11 CFR 104.5(f).

PART 104—REPORTS BY POLITICAL COMMITTEES (2 U.S.C. 434)

3. The authority citation for part 104 continues to read as follows:

Authority: 2 U.S.C. 431(1), 431(8), 431(9), 432(i), 434, 438(a)(8) and (b) and 439a.

4. Section 104.4 is amended by revising paragraph (b) to read as follows:

§ 104.4 Independent expenditures by political committees (2 U.S.C. 434(c)).

* * * * *

(b) *24-hour reports.* Reports of any independent expenditures aggregating $1,000 or more made after the 20th day, but more than 24 hours, before 12:01 a.m. of the day of the election, shall be received by the appropriate officers listed in paragraph (c) of this section after a disbursement is made, or a debt reportable under 11 CFR 104.11(b) is incurred, for an independent expenditure, but no later than 24 hours after such independent expenditure is made. Such report shall contain the information required by 11 CFR 104.3(b)(3)(vii) indicating whether the independent expenditure is made in support of, or in opposition to, the candidate involved. In addition to other permissible means of filing, a 24-hour report may be filed using a facsimile machine or electronic mail if the filer is not required to file electronically in accordance with 11 CFR 104.18. Such report shall be verified by one of the methods stated in paragraph (b)(1) or (b)(2) of this section. Any report verified under either of these methods shall be treated for all purposes (including penalties for perjury) in the same manner as a document verified by signature.

(1) For reports filed on paper (e.g., by hand delivery, U.S. Mail or facsimile machine), the certification required by 11 CFR 104.3(b)(3)(vii) shall be immediately followed by the handwritten signature of the treasurer of the political committee that made the independent expenditure and who certifies, under penalty of perjury, its independence.

(2) For reports filed by electronic mail, the certification required by 11 CFR 104.3(b)(3)(vii) shall be immediately followed by the typewritten name of the treasurer of the political committee that made the independent expenditure and who certifies, under penalty of perjury, its independence.

* * * * *

5. Section 104.5 is amended by revising paragraphs (f) and (g) to read as follows:

§ 104.5 Filing Dates (2 U.S.C. 434(a)(2)).

* * * * *

(f) *48-hour notification of contributions.* If any contribution of $1,000 or more is received by any

authorized committee of a candidate after the 20th day, but more than 48 hours, before 12:01 a.m. of the day of the election, the principal campaign committee of that candidate shall notify the Commission, the Secretary of the Senate and the Secretary of State, as appropriate, within 48 hours of receipt of the contribution. The notification shall be in writing and shall include the name of the candidate and office sought by the candidate, the identification of the contributor, and the date of receipt and amount of the contribution. The notification shall be filed in accordance with 11 CFR 100.19. The notification shall be in addition to the reporting of these contributions on the post-election report.

(g) *24-hour report of independent expenditures.* Statements disclosing any independent expenditures aggregating $1,000 or more made after the 20th day, but more than 24 hours, before 12:01 a.m. of the day of the election, must be received by the appropriate officers listed in 11 CFR 104.4(c) after a disbursement is made, or in the case of a political committee, a debt reportable under 11 CFR 104.11(b) is incurred, but no later than 24 hours after such independent expenditure is made. Such statement shall contain the information required by 11 CFR 104.3(b)(3)(vii) indicating whether the independent expenditure is made in support of, or in opposition to, the candidate involved.

* * * * *

6. Section 104.14 is amended by revising paragraph (a) to read as follows:

§ 104.14 Formal Requirements Regarding Reports and Statements.

(a) Each individual having the responsibility to file a designation, report or statement required under this subchapter shall sign the original designation, report or statement except that:

(1) Reports or statements of independent expenditures filed by facsimile machine or electronic mail under 11 CFR 104.4(b) or 11 CFR 109.2 must be verified in accordance with those sections; and

(2) Reports, designations, or statements filed electronically under 11 CFR 104.18 must follow the signature requirements of 11 CFR 104.18(g).

* * * * *

7. Section 104.18 is amended by revising paragraph (h) to read as follows:

§ 104.18 Electronic Filing of Reports (2 U.S.C. 432(d) and 434(a)(11)).

* * * * *

(h) *Schedules and forms with special requirements.*

(1) The following are schedules and forms that require the filing of additional documents and that have special signature requirements:

(i) Schedules C–1 and C-P–1, Loans and Lines of Credit From Lending Institutions (see 11 CFR 104.3(d)); and

(ii) Form 8, Debt Settlement Plan (see 11 CFR 116.7(e)).

(2) If a person files a report electronically by submitting a diskette to the Commission and is required to file any of the schedules or forms listed in paragraph (h)(1) of this section, the person shall file a paper copy of the required schedule or form with the electronic submission, or a digitized version as a separate file in the electronic submission, by the close of business on the prescribed filing date.

(3) If a person files a report electronically by uploading the data to the Commission's electronic filing system and is required to file any schedules or forms listed in paragraph (h)(1) of this section, the person shall file a paper copy or a digitized version of the required schedule or form by the close of business on the prescribed filing date.

* * * * *

PART 109—INDEPENDENT EXPENDITURES (2 U.S.C. 431(17), 434(c))

8. The authority for part 109 continues to read as follows:

Authority: 2 U.S.C. 431(17), 434(a)(11) and (c), 438(a)(8), and 441d.

9. Section 109.1 is amended by adding new paragraph (f) to read as follows:

§ 109.1 Definitions (2 U.S.C. 431(17)).

* * * * *

(f) Notwithstanding 11 CFR 100.8(a)(2) and 104.11(b), an independent expenditure is made on the first date on which the communication is published, broadcast or otherwise publicly disseminated. For purposes of this section, a communication that is mailed to its intended audience is publicly disseminated when it is relinquished to the U.S. Postal Service.

10. Section 109.2 is amended by revising the introductory text in paragraphs (a) and (a)(1), by revising paragraphs (a)(1)(v), (a)(2), and (b), and adding new paragraph (c) to read as follows:

§ 109.2 Reporting of independent expenditures by persons other than a political committee (2 U.S.C. 434(c)).

(a) Every person other than a political committee, who makes independent expenditures aggregating in excess of $250 in a calendar year shall file a verified statement or report on FEC Form 5 with the Commission or Secretary of the Senate in accordance with 11 CFR 104.4(c).

(1) If a verified statement is submitted, the statement shall include:

* * * * *

(v) A verified certification under penalty of perjury as to whether such expenditure was made in cooperation, consultation or concert with, or at the request or suggestion of any candidate or any authorized committee or agent thereof; and

* * * * *

(2) Reports or statements filed under this section shall be filed at the end of the reporting period (quarterly, pre-election, post-election, semi-annual or annual) (See 11 CFR 104.5)) during which any independent expenditure which aggregates in excess of $250 is made and in any reporting period thereafter in which additional independent expenditures are made.

(b) Reports of independent expenditures aggregating $1,000 or more made by any person after the twentieth day, but more than 24 hours before 12:01 a.m. of the day of an election must be received by the appropriate officers as listed in paragraph (c) of this section after a disbursement is made for an independent expenditure, but no later than 24 hours after such independent expenditure is made. Such report or statement shall contain the information required by paragraph (a) of this section indicating whether the independent expenditure is made in support of, or in opposition to, a particular candidate.

(c) Verification of independent expenditure statements and reports: For reports filed on paper (e.g., by hand delivery, U.S. Mail or facsimile machine), the certification required by paragraph (a)(1)(v) of this section must be immediately followed by the handwritten signature of the person who made the independent expenditure and who certifies, under penalty of perjury, its independence. For reports filed by electronic mail, the certification required by paragraph (a)(1)(v) of this section must be immediately followed by the typewritten name of the person who made the independent expenditure and who certifies, under penalty of perjury, its independence.

Dated: March 15, 2002.

David. M. Mason,

Chairman, Federal Election Commission.

[FR Doc. 02–6719 Filed 3–19–02; 8:45 am]

BILLING CODE 6715–01–P

FEDERAL HOUSING FINANCE BOARD

12 CFR Chapter IX

[No. 2002–05]

RIN 3069–AB12

Technical Amendments to Federal Housing Finance Board Regulations

AGENCY: Federal Housing Finance Board.

ACTION: Final rule.

SUMMARY: The Federal Housing Finance Board (Finance Board) is making various technical amendments to its regulations in order to complete the reorganization and modernization of the regulations that was begun with the regulatory reorganization rule published in February 2000. This rule will consolidate into one part the definitions of common terms used throughout the regulations; correct mistaken cross-references and other oversights remaining from the reorganization rule; delete obsolete provisions; and make certain changes to better conform to the stylistic conventions of the Code of Federal Regulations. None of the amendments are intended to effect any substantive change to any regulation.

EFFECTIVE DATE: This final rule is effective on March 20, 2002.

FOR FURTHER INFORMATION CONTACT: Arnold Intrater, Acting General Counsel, (202) 408–2536; or Eric Raudenbush, Senior Attorney-Advisor, (202) 408–2932, Office of General Counsel, Federal Housing Finance Board, 1777 F Street, NW., Washington, DC 20006.

SUPPLEMENTARY INFORMATION: On February 18, 2000, the Finance Board published a final rule that reorganized and renumbered the agency's existing regulations, deleted obsolete regulations and made various technical amendments to the reorganized regulations. *See* 65 FR 8253 (Feb. 18, 2000) (Reorganization Rule). The amendments set forth in the Reorganization Rule were intended to implement a more logical, efficient and modern presentation of the regulations governing the Federal Housing Finance Board and Federal Home Loan Bank System, as well as to achieve greater consistency in terminology and greater conformity with current stylistic conventions of the Code of Federal Regulations (CFR).

Because the changes implemented by the Reorganization Rule were so comprehensive, there were a number of mistakes and oversights (*e.g.,* mistaken cross-references and obsolete terminology that was not amended) that remained to be corrected even after the rule became effective. In addition, since the publication of the Reorganization Rule, the Finance Board has completed a number of major rulemakings that have either added substantial amounts of text to its regulations, or significantly altered the text that existed prior to February of 2000. Although these major rulemakings were anticipated and taken into consideration in the drafting of the Reorganization Rule, their subsequent adoption has resulted in the need for some minor technical amendments in order to integrate fully the new material into the streamlined regulatory format. This final rule corrects the mistakes resulting from, and oversights remaining from, the Reorganization Rule and makes changes to integrate recently-adopted major regulations fully and cleanly into the overall structure of the regulations. None of the amendments contained in the rule are intended to effect any substantive change to any regulation.

A significant portion of the amendments set forth in the final rule involve the consolidation of definitions of terms that are used frequently throughout the regulations into part 900, which is the first part that appears in the regulations as codified in the CFR. Prior to the enactment of the Reorganization Rule, there were numerous examples throughout the regulations of terms that were defined many times over in separate parts of the regulations, and of synonymous terms that were variously used to describe the same concept in different parts of the regulations (*e.g.,* ''Finance Board,'' ''Board'' and ''Federal Housing Finance Board'' were used in different parts of the regulations to refer to the same agency). To remedy these problems, the Reorganization Rule established a new part 900 wherein terms that were used often throughout the regulations could be defined once without further repetition.

Because several major rulemakings were anticipated at the time that the Reorganization Rule was drafted, only a few definitions were moved into part 900 as part of that rule. Several more definitions were added to part 900 in subsequent rulemakings. The Finance Board has now completed a thorough review of the regulations and has selected all of the terms that it believes should logically appear in part 900. Generally, the rule would consolidate into part 900 the definitions of all terms: (1) That are used in more than two parts of the regulations; and (2) whose definition does not set forth a substantive standard. Definitions that set forth substantive standards continue to appear in the definitional sections of the parts in which the term is used, regardless of the number of times that the definition must be repeated throughout the regulations. For example, the term ''investment grade'' is used in parts 932 (capital requirements), 956 (investments) and 960 (standby letters of credit) of the regulations, but its definition has been left in each of the appropriate definitional sections because it sets forth a substantive standard that is integral to those regulations.

The remaining amendments, which are scattered throughout the regulations, either: correct mistaken cross-references or other typographical errors; change citations or paragraph headings and numbering to conform to current standards of the CFR; or make conforming changes related to the consolidation of definitions into part 900, discussed above.

Finally, because all of the amendments that would be implemented by this rule are technical and nonsubstantive, the Finance Board has adopted the rule in final form without the usual notice-and-comment process.

Regulatory Flexibility Act

This is a technical rule that reorganizes the Finance Board's regulations without substantive change. The rule will not impose any regulatory requirements on small entities. Thus, in accordance with the provisions of the Regulatory Flexibility Act, 5 U.S.C. 601 *et seq.*, the Finance Board hereby certifies that this final rule will not have a significant economic impact on a substantial number of small entities. 5 U.S.C. 605(b).

Paperwork Reduction Act

The final rule does not contain any collections of information pursuant to the Paperwork Reduction Act of 1995. See 44 U.S.C. 3501 *et seq.* Consequently, the Finance Board has not submitted any information to the Office of Management and Budget for review.

List of Subjects in 12 CFR Parts 900 Through 997

Credit, Federal home loan banks, Reporting and recordkeeping requirements.

Accordingly, under the authority of section 2B(a) of the Federal Home Loan Bank Act, 12 U.S.C. 1422b(a), chapter IX of title 12 of the Code of Federal Regulations is amended as follows:

1. Revise part 900 to read as follows:

PART 900—GENERAL DEFINITIONS APPLYING TO ALL FINANCE BOARD REGULATIONS

Sec.
900.1 Basic terms relating to the Finance Board, the Bank System and related entities.
900.2 Terms relating to Bank operations, mission and supervision.
900.3 Terms relating to other entities and concepts used throughout 12 CFR chapter IX.

Authority: 12 U.S.C. 1422b(a).

§ 900.1 Basic terms relating to the Finance Board, the Bank System and related entities.

As used throughout this chapter, the following basic terms relating to the Finance Board, the Bank System and related entities have the meanings set forth below, unless otherwise indicated in a particular subchapter, part, section, or paragraph:

Act means the Federal Home Loan Bank Act, as amended (12 U.S.C. 1421 through 1449).

Bank, written in title case, means a Federal Home Loan Bank established under section 12 of the Act (12 U.S.C. 1432).

Bank System means the Federal Home Loan Bank System, consisting of the 12 Banks and the Office of Finance.

Board of Directors, written in title case, means the Board of Directors of the Federal Housing Finance Board; the term *board of directors,* written in lower case, has the meaning indicated in context.

Chairperson means the Chairperson of the Board of Directors of the Finance Board.

Finance Board means the Federal Housing Finance Board established by section 2A of the Act (12 U.S.C. 1422a).

Financing Corporation or *FICO* means the Financing Corporation established and supervised by the Finance Board under section 21 of the Act (12 U.S.C. 1441) and part 995 of this chapter.

Housing associate means an entity that has been approved as a housing associate pursuant to part 926 of this chapter.

Member means an institution that has been approved for membership in a Bank and has purchased capital stock in the Bank in accordance with §§ 925.20 or 925.24(b) of this chapter.

Office of Finance or *OF* means the Office of Finance, a joint office of the Banks referred to in section 2B of the Act (12 U.S.C. 1422b) and established under part 985 of this chapter.

Resolution Funding Corporation or *REFCORP* means the Resolution Funding Corporation established by section 21B of the Act (12 U.S.C. 1441b) and addressed in parts 996 and 997 of this chapter.

Secretary to the Board means the Executive Secretary to the Board of Directors, an officer within the Office of the Managing Director of the Finance Board.

§ 900.2 Terms relating to Bank operations, mission and supervision.

As used throughout this chapter, the following terms relating to Bank operations, mission and supervision have the meanings set forth below, unless otherwise indicated in a particular subchapter, part, section or paragraph:

Acquired member assets or *AMA* means those assets that may be acquired by a Bank under part 955 of this chapter.

Advance means a loan from a Bank that is:

(1) Provided pursuant to a written agreement;

(2) Supported by a note or other written evidence of the borrower's obligation; and

(3) Fully secured by collateral in accordance with the Act and part 950 of this chapter.

Affordable Housing Program or AHP means the Affordable Housing Program, the CICA program that each Bank is required to establish pursuant to section 10(j) of the Act (12 U.S.C. 1430(j)) and part 951 of this chapter.

Capital plan means the capital structure plan required for each Bank by section 6(b) of the Act, as amended (12 U.S.C. 1426(b)), and part 933 of this chapter, as approved by the Finance Board, unless the context of the regulation refers to the capital plan prior to its approval by the Finance Board.

CIP means the Community Investment Program, an advance program under CICA required to be offered pursuant to section 10(i) of the Act (12 U.S.C. 1430(i)).

Community Investment Cash Advance or *CICA* means any advance made through a program offered by a Bank under section 10 of the Act (12 U.S.C. 1430) and parts 951 and 952 of this chapter to provide funding for targeted community lending and affordable housing, including advances made under a Bank's Rural Development Funding (RDF) program, offered under section 10(j)(10) of the Act (12 U.S.C. 1430(j)(10)); a Bank's Urban Development Funding (UDF) program, offered under section 10(j)(10) of the Act (12 U.S.C. 1430(j)(10)); a Bank's Affordable Housing Program (AHP), offered under section 10(j) of the Act (12 U.S.C. 1430(j)); a Bank's Community Investment Program (CIP), offered under section 10(i) of the Act (12 U.S.C. 1430(i)); or any other program offered by a Bank that meets the requirements of part 952 of this chapter.

Community lending means providing financing for economic development projects for targeted beneficiaries, and, for community financial institutions (as defined in § 925.1 of this chapter), purchasing or funding small business loans, small farm loans or small agri-business loans (as defined in § 950.1 of this chapter).

Consolidated obligation or *CO* means any bond, debenture, or note authorized under part 966 of this chapter to be issued jointly by the Banks pursuant to section 11(a) of the Act, as amended (12 U.S.C. 1431(a)), or any bond or note issued by the Finance Board on behalf of all Banks pursuant to section 11(c) of the Act (12 U.S.C. 1431(c)), on which the Banks are jointly and severally liable.

Financial Management Policy or *FMP* means the Financial Management Policy For The Federal Home Loan Bank System approved by the Finance Board pursuant to Finance Board Resolution No. 96–45 (July 3, 1996), as amended by Finance Board Resolution No. 96–90 (Dec. 6, 1996), Finance Board Resolution No. 97–05 (Jan. 14, 1997), and Finance Board Resolution No. 97–86 (Dec. 17, 1997).

§ 900.3 Terms relating to other entities and concepts used throughout 12 CFR chapter IX.

As used throughout this chapter, the following terms relating to other entities and concepts used throughout 12 CFR chapter IX have the meanings set forth below, unless otherwise indicated in a particular subchapter, part, section or paragraph:

Appropriate Federal banking agency has the meaning set forth in section 3(q) of the Federal Deposit Insurance Act (12 U.S.C. 1813(q)) and, for federally-insured credit unions, means the NCUA.

Appropriate state regulator means any state officer, agency, supervisor or other entity that has regulatory authority over, or is empowered to institute enforcement action against, a particular institution.

Fannie Mae means the Federal National Mortgage Association established under authority of the Federal National Mortgage Association Charter Act (12 U.S.C. 1716, *et seq.*).

FDIC means the Federal Deposit Insurance Corporation.

FRB means the Board of Governors of the Federal Reserve System.

Freddie Mac means the Federal Home Loan Mortgage Corporation established under authority of the Federal Home

Loan Mortgage Corporation Act (12 U.S.C. 1451, *et seq.*).

Generally Accepted Accounting Principles or *GAAP* means accounting principles generally accepted in the United States.

Ginnie Mae means the Government National Mortgage Association established under authority of the Federal National Mortgage Association Charter Act (12 U.S.C. 1716, *et seq.*).

HUD means the United States Department of Housing and Urban Development.

NCUA means the National Credit Union Administration.

NRSRO means a credit rating organization regarded as a Nationally Recognized Statistical Rating Organization by the Securities and Exchange Commission.

OCC means the Office of the Comptroller of the Currency.

OTS means the Office of Thrift Supervision.

SBIC means a small business investment company formed pursuant to section 301 of the Small Business Investment Act (15 U.S.C. 681).

State means a state of the United States, American Samoa, the Commonwealth of the Northern Mariana Islands, the District of Columbia, Guam, Puerto Rico, or the United States Virgin Islands.

PART 905—DESCRIPTION OF ORGANIZATION AND FUNCTIONS

2. Revise the authority citation for part 905 to read as follows:

Authority: 5 U.S.C. 552; 12 U.S.C. 1422b(a), 1423.

§ 905.1 [Removed and Reserved]

3. Remove and reserve § 905.1.

4. Amend § 905.2 by revising paragraphs (b) and (c) to read as follows:

§ 905.2 General statement and statutory authority.

* * * * *

(b) The members of the Board of Directors are individually referred to as Directors. The heads of the various administrative units, called offices, are also called Directors.

(c) The Finance Board administers the Act and is authorized to issue rules, regulations and orders affecting the Bank System. The Finance Board performs all such duties and responsibilities as may be required by statute. As required by section 302(b)(2) of the Federal National Mortgage Association Charter Act (12 U.S.C. 1717(b)), it also conducts a monthly survey of all major lenders to calculate a national average for interest rates on mortgages for one-family homes, on behalf of the Fannie Mae. As required by section 305(b) of the Federal Home Loan Mortgage Corporation Act (12 U.S.C. 1454(b)), it conducts a similar survey for the Freddie Mac.

5. Revise § 905.4 to read as follows:

§ 905.4 Duties of the Finance Board.

(a) *Bank System.* The Finance Board supervises and regulates the Banks and the Office of Finance. Specifically, its duties are:

(1) To ensure that the Banks operate in a safe and sound manner;

(2) To supervise all business operations of the Banks, which may include:

(i) Prescribing conditions upon which Banks may advance funds to their members and housing associates;

(ii) Prescribing rules and conditions under which a Bank may borrow funds, pay interest on those funds, or issue obligations;

(iii) Requiring examinations of the Banks; and

(iv) Appointing the public interest members of the boards of directors of the Banks;

(3) To ensure that the Banks fulfill their housing finance and community lending mission;

(4) To ensure that the Banks remain adequately capitalized; and

(5) To ensure that the Banks are able to raise funds in the capital markets.

(b) *Financing Corporation.* The Finance Board also oversees the operations of the Financing Corporation, including its issuance of obligations.

§ 905.5 [Removed]

6. Remove § 905.5.

Appendix A to Subpart A of Part 905—[Amended]

7. Amend Appendix A to subpart A of part 905 by:

a. Removing the words ''One World Trade Center, 103rd Floor, New York, NY 10048'' and adding, in their place, the words ''200 Park Avenue, New York, NY 10166–4193'';

b. Removing the words ''One Riverfront Center, 20 Stanwix Street, Pittsburgh, PA 15222–4893'' and adding, in their place, the words ''601 Grant Street, Pittsburgh, PA 15219–4455''; and

c. Removing the words ''2400 Atrium Two, 221 East Fourth Street, Cincinnati, OH 45202'' and adding, in their place, the words ''221 East Fourth Street, Suite 1000, Cincinnati, OH 45201–0598''.

Subpart C—[Removed]

8. Remove subpart C from part 905.

Subpart D—[Redesignated]

9. Redesignate subpart D as subpart C.

10. In the heading for newly designated subpart C, remove the word ''Procedures'' and, in its place, add the word ''Miscellaneous''.

§§ 905.50, 905.52, 905.53 [Removed]

11. Remove §§ 905.50, 905.52, 905.53.

§§ 905.51, 905.54 [Redesignated]

12. Redesignate § 905.51 as § 905.25 and § 905.54 as § 905.26.

§ 905.25 [Amended]

13. Amend newly designated § 905.25 by removing the words ''(see § 905.3)'' from the introductory text.

14. Revise newly designated § 905.26 to read as follows:

§ 905.26 Official logo and seal.

This section describes and displays the logo adopted by the Board of Directors as the official symbol representing the Finance Board. It is displayed on correspondence and selected documents. This logo also serves as the official seal used to certify and authenticate official documents of the Board of Directors.

(a) *Description.* The logo is a disc with its center consisting of three polygons arranged in an irregular line partially overlapping—each polygon drawn in a manner resembling a silhouette of a pitched roof house and with distinctive eaves under its roof—encircled by a designation scroll having an outer and inner border of plain heavy lines and containing the words ''FEDERAL HOUSING FINANCE BOARD'' in capital letters with serifs, with two mullets on the extreme left and right of the scroll.

(b) *Display.* The Finance Board's official seal and logo appears below:

PART 906—OPERATIONS

15. Revise the authority citation for part 906 to read as follows:

Authority: 12 U.S.C. 1422b, 1438(b).

§ 906.1 [Amended]

16. Amend § 906.1 by removing the definitions of the terms ''Bank System'' and ''Chairperson''.

§ 906.2 [Amended]

17. Amend paragraph (b)(3) of § 906.2, in the last sentence, by removing the words ''*pro rate*'' and, in their place, adding the words ''*pro rata*''.

§ 906.4 [Amended]

18. Amend § 906.4:

a. In the first sentence of paragraph (a) by:

i. Removing the words ''United States Code,'' and adding, in their place the words ''United States Code (31 U.S.C. 9701)''; and

ii. Removing the words ''(31 U.S.C. 9701)''.

b. In paragraph (b)(2) by:

i. Removing the word ''will'' and adding, in its place, the word ''must''; and

ii. Removing the words ''Housing Finance Directorate'' and, in their place, adding the words ''Finance Board''.

c. In paragraph (b)(3) by removing the word ''analyist'' and, in its place, adding the word ''analyst''.

§ 906.5 [Amended]

19. Amend § 906.5:

a. In paragraph (b)(1) by removing the word ''Administration'' and, in its place, adding the words ''the Office of Resource Management''.

b. In paragraph (c)(2)(iv) by adding, after the semi-colon, the word ''or''.

PART 907—PROCEDURES

20. The authority citation for part 907 continues to read as follows:

Authority: 12 U.S.C. 1422b(a)(1).

21. Amend part 907 by removing the word ''intervener'' and ''interveners'' wherever they appear and adding, in their place, respectively, the words ''intervenor'' and ''intervenors''.

§ 907.1 [Amended]

22. Amend § 907.1:

a. In the introductory text by removing the words ''For purposes of'' and, in their place, adding the words ''As used in''; and

b. By removing the definitions of the terms ''Board of Directors'', ''Chairperson'' and ''Secretary to the Board''.

§ 907.6 [Amended]

23. Amend paragraph (b)(2) of § 907.6 by removing the words ''Board of Directors'' (in title case) and, in their place, adding the words ''board of directors'' (in lower case).

PART 910—FREEDOM OF INFORMATION ACT REGULATION

24. Revise the authority citation for part 910 to read as follows:

Authority: 5 U.S.C. 552.

25. In § 910.1, revise the introductory text and the definitions of the terms ''Agency'' and ''Financial Regulatory Agency'' to read as follows:

§ 910.1 Definitions.

As used in this part:

Agency has the meaning set forth in 5 U.S.C. 552(f)(1).

* * * * *

Financial regulatory agency means the FRB, OCC, FDIC, OTS, NCUA, Farm Credit Administration, or a state officer, agency, supervisor, or other entity that has regulatory authority over, or is empowered to institute enforcement action against, a financial institution, including an insurance company.

* * * * *

§ 910.4 [Amended]

26. Amend paragraph (d)(2) of § 910.4 by removing the words ''paragraph (c)(1)'' and, in their place, adding the words ''paragraph (d)(1)''.

§ 910.9 [Amended]

27. Amend paragraph (d)(3)(i) of § 910.9, in the introductory paragraph, by removing the words ''paragraph (b)(3)'' and, in their place, adding the words ''paragraph (d)(3)''.

PART 911—AVAILABILITY OF UNPUBLISHED INFORMATION

28. The authority citation for part 911 continues to read as follows:

Authority: 5 U.S.C. 301; 12 U.S.C. 1422b(a)(1).

§ 911.1 [Amended]

29. Amend the introductory paragraph to § 911.1 by removing the words ''For purposes of'' and, in their place, adding the words ''As used in''.

§ 911.3 [Amended]

30. Amend paragraph (d) of § 911.3 by removing the words ''Federal Home Loan Bank'' wherever they appear and, in their place, adding the word ''Bank''.

PART 912—INFORMATION REGARDING MEETINGS OF THE BOARD OF DIRECTORS OF THE FEDERAL HOUSING FINANCE BOARD

31. The authority citation for part 912 continues to read as follows:

Authority: 5 U.S.C. 552b.

§§ 912.1, 912.2 [Redesignated]

32. Redesignate §§ 912.1 and 912.2 as §§ 912.2 and § 912.1, respectively.

33. Amend newly designated § 912.1 by removing the definition of the term ''Executive secretary'', by adding, in proper alphabetical sequence, a definition for the term ''Secretary to the Board'', and by revising the introductory text and the definitions of the terms ''Chairperson'' and ''Sunshine Act'', to read as follows:

§ 912.1 Definitions.

As used in this part:

* * * * *

Chairperson includes the Acting Chairperson.

* * * * *

Secretary to the Board includes the Acting Secretary if the position of Secretary is vacant.

Sunshine Act means the Government in the Sunshine Act (5 U.S.C. 552b).

§ 912.2 [Amended]

34. Amend paragraph (a) of newly designated § 912.2, in the first sentence, by removing the words ''Government in the Sunshine Act (5 U.S.C. 552b), that'' and, in their place, adding the words ''Sunshine Act, which''.

§ 912.4 [Amended]

35. Amend § 912.4:

a. In paragraph (a)(3), introductory text, by removing the word *''Provided''* and adding, in its place, the italicized word *''provided''*; and

b. In paragraph (a)(8) by removing the concluding period and adding, in its place, a semi-colon.

§ 912.5 [Amended]

36. Amend § 912.5:

a. By removing the words ''Executive Secretary'' wherever they appear and adding, in their place, the words ''Secretary to the Board'';

b. In the first sentence of paragraph (a)(5), by removing the words ''paragraphs (a) (5), (6), or (7) of § 912.4'' and adding, in their place, the words ''§ 912.4(a)(5), (6), or (7)'';

c. In paragraph (a)(6)(ii) by:

i. Removing the words ''paragraph (a) of § 912.4'' and adding, in their place, the words ''§ 912.4(a)''; and

ii. Adding, after the words ''determined by the Board'', the words ''of Directors'';

d. Removing, in paragraph (b)(1), the words ''paragraphs (a) (4), (8), (9)(i) or (10) of § 912.4'' and adding, in their place, the words ''§ 912.4(a)(4), (8), (9)(i) or (10)''; and

e. Removing, in paragraph (c)(2), the words ''paragraphs (a) (8), (9)(i) or (10)

of § 912.4'' and adding, in their place, the words ''§ 912.4(a)(8), (9)(i) or (10)''.

§ 912.6 [Amended]

37. Amend § 912.6:

a. In paragraph (a)(1) by removing the words ''paragraph (a) of § 912.4'' and adding, in their place, the words ''§ 912.4(a)'';

b. In paragraph (a)(1) by removing the words ''paragraph (a) of § 912.5'' and adding, in their place, the words ''§ 912.5(a)'';

c. In paragraph (a)(2) by removing the words ''paragraph (b) of § 912.5'' and adding, in their place, the words ''§ 912.5(b)'';

d. In the first sentence of paragraph (b) by:

i. Removing the words ''paragraph (a) of § 912.5'' and adding, in their place, the words ''§ 912.5(a)''; and

ii. Removing the words ''Executive Secretary'' and adding, in their place, the words ''Secretary to the Board''; and

e. In paragraph (c) by removing the words ''paragraph (a) of § 912.5'' and adding, in their place, the words ''§ 912.5(a)''.

PART 913—PRIVACY ACT PROCEDURES

38. The authority citation for part 913 continues to read as follows:

Authority: 5 U.S.C. 552a.

PART 913—[AMENDED]

39. In part 913, remove the words ''Executive Secretary'' wherever they appear and add, in their place, the words ''Secretary to the Board''.

§§ 913.1, 913.2 [Redesignated]

40. Redesignate §§ 913.1 and 913.2 as §§ 913.2 and § 913.1, respectively.

§ 913.3 [Amended]

41. Amend paragraph (b) of § 913.3 by adding the word ''in'' between the words ''system of records shall be'' and the words ''writing, shall contain''.

§ 913.5 [Amended]

42. Amend § 913.5:

a. In paragraph (b)(2)(vi), by removing the concluding period and adding, in its place, a semi-colon; and

b. In paragraph (c), by adding the heading ''*Accounting.*''.

§ 913.9 [Amended]

43. Amend § 913.9:

a. In paragraph (c)(1)(iii), by removing the words ''as amended, 5 U.S.C. App. 3'' and adding, in their place, the words ''as amended (5 U.S.C. App. 3)'';

b. In paragraph (c)(2)(v), by removing the words ''as amended, 5 U.S.C. App. 3'' and adding, in their place, the words ''as amended (5 U.S.C. App. 3)''; and

c. In paragraph (d), in the introductory text, by removing the words ''comprised of'' and, in their place, adding the word ''comprising''.

PART 915—BANK DIRECTOR ELIGIBILITY, APPOINTMENT AND ELECTIONS

44. Revise the authority citation for part 915 by revising it to read as follows:

Authority: 12 U.S.C. 1422a(a)(3), 1422b(a), 1426, 1427, 1432.

PART 915—[AMENDED]

45. Amend part 915 by removing the words ''docket number'' wherever they appear and adding, in their place, the words ''FHFB ID number''.

§ 915.1 [Amended]

46. Amend § 915.1:

a. In the definition of ''Discretionary directorship'', by removing the words ''section 7(a) of the Act'' and adding, in their place, the words ''section 7(a) of the Act (12 U.S.C. 1427(a))'';

b. In the definition of ''Guaranteed directorship'', by removing the words ''section 7(b) of the Act'' and adding, in their place, the words ''section 7(b) of the Act (12 U.S.C. 1427(b))''; and

c. In the definition of ''Voting state'', by removing the words ''part 933'' and adding, in its place, the words ''part 925''.

§ 915.3 [Amended]

47. Amend § 915.3:

a. In paragraph (a), fourth sentence, by:

i. Removing the words ''Section 7(d) of the Act'' and adding, in their place, the words ''section 7(d) of the Act (12 U.S.C. 1427(d))''; and

ii. Removing the word ''chapter'' and, in its place, adding the word ''part'';

b. In paragraph (b)(4) by adding, after the words ''section 7(e) of the Act'', the words ''(12 U.S.C. 1427(e))'';

c. In paragraph (b)(5), in the first sentence, by adding, after the words ''section 7(a) of the Act'', the words ''(12 U.S.C. 1427(a))''; and

d. In paragraph (d) by:

i. Adding, preceding the text, the heading ''Location of member.''; and

ii. Adding after the words ''section 7(c) of the Act'', the words ''(12 U.S.C. 1427(c))''.

§ 915.5 [Amended]

48. Amend paragraph (c) of § 915.5, in the second sentence, by removing the words ''Section 7(b) of the Act'' and adding, in their place, the words ''section 7(b) of the Act (12 U.S.C. 1427(b))''.

§ 915.7 [Amended]

49. Amend § 915.7:

a. In paragraph (b)(2):

i. In the first sentence, by removing the words ''A bona fide resident of the Bank district or an'' and adding, in their place, the word ''An''; and

ii. In the first sentence, by removing the words ''appropriate federal regulator'' and, in their place, adding the words ''appropriate Federal banking agency'';

b. By removing the second sentence;

c. In paragraph (c)(1), by redesignating paragraphs (c)(1)(i) and (c)(1)(ii) as paragraphs (c)(1)(i)(A) and (c)(1)(i)(B), respectively;

d. By redesignating paragraphs (c)(1), (c)(2) and (c)(3) as paragraphs (c)(1)(i), (c)(1)(ii) and (c)(1)(iii), respectively;

e. By designating the introductory text of paragraph (c) as paragraph (c)(1) introductory text;

f. By redesignating paragraph (c)(4) as paragraph (c)(2);

g. In newly designated paragraph (c)(1)(i)(B), by removing the word ''Act.'' and adding, in its place, the words ''Act (12 U.S.C. 1427(d));'';

h. In newly designated paragraph (c)(1)(ii), by removing the period and, in its place, adding the word ''; or'';

i. In newly designated paragraph (c)(2), by removing the words ''Section 7(d) of the Act'' and adding, in their place, the words ''section 7(d) of the Bank Act (12 U.S.C. 1427(d))''; and

j. In paragraph (d)(2), by removing the words ''Section 7(f) of the Bank Act'' and adding, in their place, the words ''section 7(f) of the Act (12 U.S.C. 1427(f))''.

§ 915.8 [Amended]

50. Amend paragraph (b) of § 915.8 by adding, before the period at the end of the second sentence, the words ''of this section''.

§ 915.10 [Amended]

51. Amend paragraph (b) of § 915.10:

a. In both the first and second sentences, by removing the words ''Section 7(d) of the Act'' and adding, in their place, the words ''section 7(d) of the Act (12 U.S.C. 1427(d))''; and

b. In the second sentence, by removing the word ''Part'' both places that it appears and, in its place, adding the word ''part''.

§ 915.12 [Amended]

52. Amend paragraph (a) of § 915.12, in the parenthetical following the first sentence, by removing the words ''12 CFR 905.51'' and adding, in their place, the words ''§ 905.25 of this chapter''.

§ 915.15 [Amended]

53. Amend § 915.15, in the first sentence, by removing the word ''Act'' and adding, in its place, the words ''Act (12 U.S.C. 1427(c))''.

§ 915.16 [Amended]

54. Amend paragraph (e) of § 915.16, in the second sentence, by removing the words ''Section 7(d) of the Bank Act'' and adding, in their place, the words ''section 7(d) of the Act (12 U.S.C. 1427(d))''.

§ 915.17 [Amended]

55. Amend paragraph (a)(1) of § 915.17, in the second sentence, by removing the words ''Section 7(a) of the Bank Act'' and adding, in their place, the words ''section 7(a) of the Act (12 U.S.C. 1427(a))''.

PART 917—POWERS AND RESPONSIBILITIES OF BANK BOARDS OF DIRECTORS AND SENIOR MANAGEMENT

56. The authority citation for part 917 continues to read as follows:

Authority: 12 U.S.C. 1422a(a)(3), 1422b(a)(1), 1426, 1427, 1432(a), 1436(a), 1440.

§ 917.1 [Amended]

57. Amend § 917.1:

a. By removing the definition of ''Capital structure plan''; and

b. In paragraph (4) of the definition of ''Contingency liquidity'', by removing the words ''a credit rating organization regarded as a Nationally Recognized Statistical Rating Organization by the Securities and Exchange Commission'' and adding, in their place, the words ''an NRSRO''.

§ 917.3 [Amended]

58. Amend paragraph (b)(3)(i) of § 917.3 by removing the word ''and'' that appears after the semi-colon.

§ 917.4 [Amended]

59. Amend paragraph (a)(1) of § 917.4 by adding, between the words ''advances,'' and ''letters of credit'', the word ''standby''.

§ 917.5 [Amended]

60. Amend § 917.5:

a. In paragraph (a) introductory text, by removing the words ''90 days after the effective date of this section'' and, in their place, adding the words ''on July 30, 2000'';

b. In paragraph (a)(4), by adding a hard (paragraph) return after the word ''and'' and

c. In paragraph (c) by designating as a heading (italicizing) the words ''Report to Finance Board''.

§ 917.6 [Amended]

61. Amend paragraph (c) of § 917.6, in the introductory text, by adding a comma after the words ''paragraph (a)(1) of this section''.

§ 917.7 [Amended]

62. Amend paragraph (e)(8) of § 917.7 by removing the words ''implementation of with the Bank's'' and, in their place, adding the words ''implementation of the Bank's''.

PART 918—BANK DIRECTOR COMPENSATION AND EXPENSES

63. The authority citation for part 918 continues to read as follows:

Authority: 12 U.S.C. 1422b(a), 1427.

§ 918.3 [Amended]

64. Amend paragraph (a)(1) of § 918.3 by removing the words ''Act, as amended, 12 U.S.C. 1427(i)'' and adding, in their place, the words ''Act (12 U.S.C. 1427(i))''.

§ 918.5 [Amended]

65. Amend § 918.5 by removing the words ''Act, as amended'' and adding, in their place, the words ''Act (12 U.S.C. 1427(i))''.

§ 918.7 [Amended]

66. Amend § 918.7 by removing the words ''Act, as amended'' and adding, in their place, the words ''Act (12 U.S.C. 1427(i))''.

§ 918.9 [Amended]

67. Amend § 918.9 by adding the word ''former'' between the words ''officers and employees in'' and the words ''12 CFR 932.19''.

PART 925—MEMBERS OF THE BANKS

68. The authority citation part 925 continues to read as follows:

Authority: 12 U.S.C. 1422, 1422a, 1422b, 1423, 1424, 1426, 1430, 1442.

69. Revise § 925.1 to read as follows:

§ 925.1 Definitions.

For purposes of this part:

Adjusted net income means net income, excluding extraordinary items such as income received from, or expense incurred in, sales of securities or fixed assets, reported on a regulatory financial report.

Aggregate unpaid loan principal means the aggregate unpaid principal of a subscriber's or member's home mortgage loans, home-purchase contracts and similar obligations.

Allowance for loan and lease losses means a specified balance-sheet account held to fund potential losses on loans or leases, that is reported on a regulatory financial report.

Appropriate regulator means a regulatory entity listed in § 925.8, as applicable.

Combination business or farm property means real property for which the total appraised value is attributable to residential, and business or farm uses.

Community financial institution or *CFI* means an institution:

(1) The deposits of which are insured under the Federal Deposit Insurance Act (12 U.S.C. 1811, *et seq.*); and

(2) That has, as of the date of the transaction at issue, less than the community financial institution asset cap in total assets, based on an average of total assets over three years, which shall be calculated by the Bank based on the average of total assets drawn from the institution's regulatory financial reports filed with its appropriate regulator for the most recent calendar quarter and the immediately preceding 11 calendar quarters.

Community financial institution asset cap means, for 2000, $500 million. Beginning in 2001 and for subsequent years, the cap shall be adjusted annually by the Finance Board to reflect any percentage increase in the preceding year's Consumer Price Index (CPI) for all urban consumers, as published by the U.S. Department of Labor. Each year, as soon as practicable after the publication of the previous year's CPI, the Finance Board shall publish notice by the **Federal Register** of the CPI-adjusted cap.

Composite regulatory examination rating means a composite rating assigned to an institution following the guidelines of the Uniform Financial Institutions Rating System (Issued by the Federal Financial Institutions Examination Council; for availability contact the Federal Housing Finance Board, FOIA Office, 1777 F Street, NW., Washington, DC 20006), including a CAMEL rating, a MACRO rating, or other similar rating, contained in a written regulatory examination report.

Consolidation includes a consolidation, a merger, or a purchase of all of the assets and assumption of all of the liabilities of an entity by another entity.

Dwelling unit means a single room or a unified combination of rooms designed for residential use.

Enforcement action means any written notice, directive, order or

agreement initiated by an applicant for Bank membership or by its appropriate regulator to address any operational, financial, managerial or other deficiencies of the applicant identified by such regulator, but does not include a board of directors resolution adopted by the applicant in response to examination weaknesses identified by such regulator.

Funded residential construction loan means the portion of a loan secured by real property made to finance the on-site construction of dwelling units on one-to-four family property or multifamily property disbursed to the borrower.

Home mortgage loan means:

(1) A loan, whether or not fully amortizing, or an interest in such a loan, which is secured by a mortgage, deed of trust, or other security agreement that creates a first lien on one of the following interests in property:

(i) One-to-four family property or multifamily property, in fee simple;

(ii) A leasehold on one-to-four family property or multifamily property under a lease of not less than 99 years that is renewable, or under a lease having a period of not less than 50 years to run from the date the mortgage was executed; or

(iii) Combination business or farm property where at least 50 percent of the total appraised value of the combined property is attributable to the residential portion of the property or, in the case of any community financial institution, combination business or farm property, on which is located a permanent structure actually used as a residence (other than for temporary or seasonal housing), where the residence constitutes an integral part of the property; or

(2) A mortgage pass-through security that represents an undivided ownership interest in:

(i) Long-term loans, provided that, at the time of issuance of the security, all of the loans meet the requirements of paragraph (1) of this definition; or

(ii) A security that represents an undivided ownership interest in long-term loans, provided that, at the time of issuance of the security, all of the loans meet the requirements of paragraph (1) of this definition.

Insured depository institution means an insured depository institution as defined in section 2(12) of the Act (12 U.S.C. 1422(12)).

Long-term means a term to maturity of five years or greater.

Manufactured housing means a manufactured home as defined in section 603(6) of the Manufactured Home Construction and Safety Standards Act of 1974, as amended (42 U.S.C. 5402(6)).

Multifamily property means:

(1) Real property that is solely residential and includes five or more dwelling units;

(2) Real property that includes five or more dwelling units combined with commercial units, provided that the property is primarily residential; or

(3) Nursing homes, dormitories, or homes for the elderly.

Nonperforming loans and leases means the sum of the following, reported on a regulatory financial report:

(1) Loans and leases that have been past due for 90 days (60 days in the case of credit union applicants) or longer but are still accruing;

(2) Loans and leases on a nonaccrual basis; and

(3) Restructured loans and leases (not already reported as nonperforming).

Nonresidential real property means real property that is not used for residential purposes, including business or industrial property, hotels, motels, churches, hospitals, educational and charitable institution buildings or facilities, clubs, lodges, association buildings, golf courses, recreational facilities, farm property not containing a dwelling unit, or similar types of property.

One-to-four family property means:

(1) Real property that is solely residential, including one-to-four family dwelling units or more than four family dwelling units if each dwelling unit is separated from the other dwelling units by dividing walls that extend from ground to roof, such as row houses, townhouses or similar types of property;

(2) Manufactured housing if applicable state law defines the purchase or holding of manufactured housing as the purchase or holding of real property;

(3) Individual condominium dwelling units or interests in individual cooperative housing dwelling units that are part of a condominium or cooperative building without regard to the number of total dwelling units therein; or

(4) Real property which includes one-to-four family dwelling units combined with commercial units, provided the property is primarily residential.

Other real estate owned means all other real estate owned (i.e., foreclosed and repossessed real estate), reported on a regulatory financial report, and does not include direct and indirect investments in real estate ventures.

Regulatory examination report means a written report of examination prepared by the applicant's appropriate regulator, containing, in the case of insured depository institution applicants, a composite rating assigned to the institution following the guidelines of the Uniform Financial Institutions Rating System, including a CAMEL rating, a MACRO rating, or other similar rating.

Regulatory financial report means a financial report that an applicant is required to file with its appropriate regulator on a specific periodic basis, including the quarterly call report for commercial banks, thrift financial report for savings associations, quarterly or semi-annual call report for credit unions, the National Association of Insurance Commissioners' annual or quarterly report for insurance companies, or other similar report, including such report maintained by the appropriate regulator on a computer on-line database.

Residential mortgage loan means any one of the following types of loans, whether or not fully amortizing:

(1) Home mortgage loans;

(2) Funded residential construction loans;

(3) Loans secured by manufactured housing whether or not defined by state law as secured by an interest in real property;

(4) Loans secured by junior liens on one-to-four family property or multifamily property;

(5) Mortgage pass-through securities representing an undivided ownership interest in:

(i) Loans that meet the requirements of paragraphs (1) through (4) of this definition at the time of issuance of the security;

(ii) Securities representing an undivided ownership interest in loans, provided that, at the time of issuance of the security, all of the loans meet the requirements of paragraphs (1) through (4) of this definition; or

(iii) Mortgage debt securities as defined in paragraph (6) of this definition;

(6) Mortgage debt securities secured by:

(i) Loans, provided that, at the time of issuance of the security, substantially all of the loans meet the requirements of paragraphs (1) through (4) of this definition;

(ii) Securities that meet the requirements of paragraph (5) of this definition; or

(iii) Securities secured by assets, provided that, at the time of issuance of the security, all of the assets meet the requirements of paragraphs (1) through (5) of this definition;

(7) Home mortgage loans secured by a leasehold interest, as defined in

paragraph (1)(ii) of the definition of ''home mortgage loan,'' except that the period of the lease term may be for any duration; or

(8) Loans that finance properties or activities that, if made by a member, would satisfy the statutory requirements for the CIP established under section 10(i) of the Act (12 U.S.C. 1430(i)), or the regulatory requirements established for any CICA program.

Total assets means the total assets reported on a regulatory financial report.

§ 925.3 [Amended]

70. Amend paragraph (c) of § 925.3, in the last sentence, by removing the words ''Executive Secretary'' and adding, in their place, the words ''Secretary to the Board''.

§ 925.4 [Amended]

71. Amend paragraph (c)(2) of § 925.4 by:

a. Removing the reference to ''§ 925.25(d)(1)(i)'' and adding, in its place, a reference to ''§ 925.24(b)(4)(i)''; and

b. Removing the reference to ''§§ 925.25(d)(2)(i), (e) and (f)'' and adding, in its place, a reference to ''§ 925.24(c) and (d)''.

§ 925.5 [Amended]

72. Amend paragraph (a)(2) of § 925.5 by removing the words ''Executive Secretary'' and adding, in their place, the words ''Secretary to the Board''.

§ 925.7 [Amended]

73. Amend § 925.7 by adding the words ''(12 U.S.C. 1424(a)(1)(A))'' between the words ''of the Act'' and the words ''and § 925.6(a)(1)''.

§ 925.8 [Amended]

74. Amend § 925.8 by:

a. Adding the words ''(12 U.S.C. 1424(a)(1)(B))'' between the words ''of the Act'' and the words ''and § 925.6(a)(2)''; and

b. Removing the words ''Federal Deposit Insurance Corporation, the Federal Reserve Board, the National Credit Union Administration, the Office of the Comptroller of the Currency, the Office of Thrift Supervision'' and, in their place, adding the words ''FDIC, FRB, NCUA, OCC, OTS''.

§ 925.9 [Amended]

75. Amend § 925.9 by adding the words ''(12 U.S.C. 1424(a)(1)(C))'' between the words ''of the Act'' and the words ''and § 925.6(a)(3)''.

§ 925.10 [Amended]

76. Amend § 925.10 by:

a. Adding the words ''(12 U.S.C. 1424(a)(2)(A))'' between the words ''of the Act'' and the words ''and § 925.6(b)''; and

b. Removing the words ''§ 925.1(bb)(6)'' and, in their place, adding the words ''paragraph (6) of the definition of 'residential mortgage loan' set forth in § 925.1''.

§ 925.11 [Amended]

77. Amend § 925.11:

a. In paragraph (a), by adding the words ''(12 U.S.C. 1424(a)(2)(B))'' between the words ''of the Act'' and the words ''and § 925.6(a)(4)'';

b. In paragraph (b), introductory text, by adding the words ''(12 U.S.C. 1424(a)(2)(B))'' between the words ''of the Act'' and the words ''and § 925.6(a)(4)'';

c. In paragraph (b)(3), by removing the words ''was '1;' or, was '2' or'' and adding, in their place, the words ''was '1;' or was '2' or''; and

d. In paragraph (c), by adding the words ''(12 U.S.C. 1424(a)(2)(B))'' between the words ''of the Act'' and the words ''and § 925.6(a)(4)''.

§ 925.12 [Amended]

78. Amend the introductory text of § 925.12 by adding the words ''(12 U.S.C. 1424(a)(2)(C))'' between the words ''of the Act'' and the words ''and § 925.6(a)(5)''.

§ 925.13 [Amended]

79. Amend paragraph (a) of § 925.13 by adding the words ''(12 U.S.C. 1424(a)(2)(C))'' between the words ''of the Act'' and the words ''and § 925.6(a)(6)''.

80. Revise § 925.14 to read as follows:

§ 925.14 De novo insured depository institution applicants.

(a) *Duly organized, subject to inspection and regulation, financial condition and character of management requirements.* An insured depository institution applicant whose date of charter approval is within three years prior to the date the Bank receives the applicant's application for membership in the Bank (de novo applicant) is deemed to meet the requirements of §§ 925.7, 925.8, 925.11 and 925.12.

(b) *Makes long-term home mortgage loans requirement.* A de novo applicant shall be deemed to make long-term home mortgage loans as required by § 925.9 if it has filed as part of its application for membership a written justification acceptable to the Bank of how its home financing credit policy and lending practices will include originating or purchasing long-term home mortgage loans.

(c) *10 percent requirement.* (1) *One-year requirement.* A de novo applicant that is subject to the 10 percent requirement of section 4(a)(2)(A) of the Act (12 U.S.C. 1424(a)(2)(A)) and § 925.6(b) shall have until one year after commencing its initial business operations to meet the 10 percent requirement of § 925.10.

(2) *Conditional approval.* A de novo applicant shall be conditionally deemed to be in compliance with the 10 percent requirement of section 4(a)(2)(A) of the Act (12 U.S.C. 1424(a)(2)(A)) and § 925.6(b). A de novo applicant that receives such conditional membership approval is subject to the stock purchase requirements of § 925.20 and the advances provisions of part 950 of this chapter.

(3) *Approval.* A de novo applicant shall be deemed to be in compliance with the 10 percent requirement of section 4(a)(2)(A) of the Bank Act (12 U.S.C. 1424(a)(2)(A)) and § 925.6(b) upon receipt by the Bank from the applicant, within one year after commencement of the applicant's initial business operations, of evidence acceptable to the Bank that the applicant satisfies the 10 percent requirement.

(4) *Conditional approval deemed null and void.* If the requirements of paragraph (c)(3) of this section are not satisfied, a de novo applicant shall be deemed to be in noncompliance with the 10 percent requirement of section 4(a)(2)(A) of the Act (12 U.S.C. 1424(a)(2)(A)) and § 925.6(b), and its conditional membership approval is deemed null and void.

(5) *Treatment of outstanding advances and Bank stock.* If a de novo applicant's conditional membership approval is deemed null and void pursuant to paragraph (c)(4) of this section, the liquidation of any outstanding indebtedness owed by the applicant to the Bank and redemption of stock of such Bank shall be carried out in accordance with § 925.29.

(d) *Home financing policy requirement.* (1) *Conditional approval.* A de novo applicant that has not received its first formal, or, if unavailable, informal or preliminary, Community Reinvestment Act (CRA) performance evaluation, shall be conditionally deemed to be in compliance with the home financing policy requirement of section 4(a)(2)(C) of the Act (12 U.S.C. 1424(a)(2)(C)) and § 925.6(a)(6), if the applicant has filed as part of its application for membership a written justification acceptable to the Bank of how and why its home financing credit policy and lending practices will meet the credit needs of

its community. An applicant that receives such conditional membership approval is subject to the stock purchase requirements of § 925.20 and the advances provisions of part 950 of this chapter.

(2) *Approval.* A de novo applicant that has been granted conditional approval under paragraph (d)(1) of this section shall be deemed to be in compliance with the home financing policy requirement of section 4(a)(2)(C) of the Act (12 U.S.C. 1424(a)(2)(C)) and § 925.6(a)(6) upon receipt by the Bank of evidence from the applicant that it received a CRA rating of ''Satisfactory'' or better on its first formal, or if unavailable, informal or preliminary, CRA performance evaluation.

(3) *Conditional approval deemed null and void.* If the de novo applicant's first such CRA rating is ''Needs to Improve'' or ''Substantial Non-Compliance,'' the applicant shall be deemed to be in noncompliance with the home financing policy requirement of section 4(a)(2)(C) of the Act (12 U.S.C. 1424(a)(2)(C)) and § 925.6(a)(6), subject to rebuttal by the applicant under § 925.17(f), and its conditional membership approval is deemed null and void.

(4) *Treatment of outstanding advances and Bank stock.* If the applicant's conditional membership approval is deemed null and void pursuant to paragraph (d)(3) of this section, the liquidation of any outstanding indebtedness owed by the applicant to the Bank and redemption of stock of such Bank shall be carried out in accordance with § 925.29.

§ 925.16 [Amended]

81. Amend § 925.16 by adding the words ''(12 U.S.C. 1424(a)(2)(B))'' between the words ''of the Act'' and the words ''and § 925.6(a)(4)''.

§ 925.17 [Amended]

82. Amend § 925.17:

a. In paragraph (a) by removing the words ''of the Act and § 925.6 (a)'' and adding, in their place, the words ''of the Act (12 U.S.C. 1424(a)) and § 925.6(a)'';

b. In paragraph (b) by removing the words ''of the Act and § 925.6(a) (2)'' and adding, in their place, the words ''of the Act (12 U.S.C. 1424(a)) and § 925.6(a)(2)''; and

c. In the heading to paragraph (f), by removing the words ''925.13, 925.14(a)(4), and 925.14(b)(3)'' and, in their place, adding the words ''925.13 and 925.14(d)''.

§ 925.18 [Amended]

83. Amend paragraph (e) of § 925.18 by removing the words ''of the Act or §§ 925.26, 925.27, and 925.28'' and, in their place, adding the words ''of the Act (12 U.S.C. 1426) or §§ 925.26 and 925.27''.

§ 925.22 [Amended]

84. Amend § 925.22:

a. In paragraph (b)(2), by removing the word ''Board'' wherever it appears and adding, in its place, the words ''Finance Board''; and

b. In paragraph (c) by removing the words ''of the Act, 12 U.S.C. 1426(b), 1430(c), 1430(e)'' and adding, in their place, the words ''of the Act (12 U.S.C. 1426(b), 1430(c), 1430(e))''.

§ 925.24 [Amended]

85. Amend § 925.24:

a. In paragraph (b)(5), in the first sentence, by adding the words ''(12 U.S.C. 1426)'' immediately preceding the period;

b. In paragraph (c) by removing the word ''Chapter'' and adding, in its place, the word ''chapter''; and

c. In paragraph (d), by removing the words ''of the Act, 12 U.S.C. 1426(f)'' and adding, in their place, the words ''of the Act (12 U.S.C. 1426(f))''.

§ 925.26 [Amended]

86. Amend paragraph (d) of § 925.26 by removing the words ''requirements under 12 U.S.C. 1441b(f)(2)(C)'' and, in their place, adding the words ''requirements under section 21B(f)(2)(C) of the Act (12 U.S.C. 1441b(f)(2)(C))''.

§ 925.31 [Amended]

87. Amend § 925.31:

a. In paragraph (a), by removing the word ''Board'' and adding, in its place, the words ''Finance Board''; and

b. In paragraph (b), by removing the word ''Board'' and adding, in its place, the words ''Finance Board''.

PART 926—FEDERAL HOME LOAN BANK HOUSING ASSOCIATES

88. The authority citation for § 926.1 continues to read as follows:

Authority: 12 U.S.C. 1422b(a), 1430b.

§ 926.1 [Amended]

89. Amend § 926.1 by removing the definitions of the terms ''Advance'' and ''HUD''.

§ 926.4 [Amended]

90. Amend § 926.4:

a. In paragraph (a) by adding the words ''(12 U.S.C. 1430b(a))'' between the words ''of the Act'' and the words ''and § 926.3(a)(1)'';

b. In paragraph (c)(1), by adding the words ''(12 U.S.C. 1430b(a))'' between the words ''of the Act'' and the words ''and § 926.3(a)(3)''; and

c. In paragraph (d), in the first sentence, by adding the words ''(12 U.S.C. 1430b(a))'' between the words ''of the Act'' and the words ''and § 926.3(a)(4)''.

PART 930—DEFINITIONS APPLYING TO RISK MANAGEMENT AND CAPITAL REGULATIONS

91. The authority citation for part 930 continues to read as follows:

Authority: 12 U.S.C. 1422a(a)(3), 1422b(a), 1426, 1440, 1443, 1446.

92. Amend § 930.1 by:

a. Removing the definitions of the terms ''Capital plan'' and ''GAAP''; and

b. Revising the definitions of the terms ''Contingency liquidity'', ''Credit risk'', ''Market risk'' and ''Operations risk'' to read as follows:

§ 930.1 Definitions.

As used in this subchapter:

* * * * *

Contingency liquidity means the sources of cash a Bank may use to meet its operational requirements when its access to the capital markets is impeded, and includes:

(1) Marketable assets with a maturity of one year or less;

(2) Self-liquidating assets with a maturity of seven days or less;

(3) Assets that are generally accepted as collateral in the repurchase agreement market; and

(4) Irrevocable lines of credit from financial institutions rated not lower than the second highest credit rating category by an NRSRO.

* * * * *

Credit risk means the risk that the market value, or estimated fair value if market value is not available, of an obligation will decline as a result of deterioration in creditworthiness.

* * * * *

Market risk means the risk that the market value, or estimated fair value if market value is not available, of a Bank's portfolio will decline as a result of changes in interest rates, foreign exchange rates, equity and commodity prices.

* * * * *

Operations risk means the risk of an unexpected loss to a Bank resulting from human error, fraud, unenforceability of legal contracts, or deficiencies in internal controls or information systems.

* * * * *

PART 932—FEDERAL HOME LOAN BANK CAPITAL REQUIREMENTS

93. The authority citation for part 932 continues to read as follows:

Authority: 12 U.S.C. 1422a(a)(3), 1422b(a), 1426, 1440, 1443, 1446.

§ 932.4 [Amended]

94. Amend paragraph (g)(1)(i) of § 932.4 by adding a hard (paragraph) return after the word ''or''.

PART 940—CORE MISSION ACTIVITIES

95–96. The authority citation for part 940 continues to read as follows:

Authority: 12 U.S.C. 1422a(a)(3), 1422b(a), 1430, 1430b, 1431.

97. Revise § 940.1 to read as follows:

§ 940.1 Definitions.

As used in this part:

Targeted income level has the meaning set forth in paragraphs (1) and (2) of the definition of ''targeted income level'' in § 952.1 of this chapter.

§ 940.2 [Amended]

98. Amend § 940.2:

a. In the introductory text, by:

i. Removing the word ''associates'' and adding, in its place, the words ''housing associates''; and

ii. Removing the words ''members'' and associates' financing of'' and adding, in their place, the words ''members'' and housing associates''; and

b. In paragraph (a) of § 940.2 by removing the word ''Housing'' and adding, in its place, the words ''Financing of housing''.

PART 944—COMMUNITY SUPPORT REQUIREMENTS

99. Revise the authority citation for part 944 to read as follows:

Authority: 12 U.S.C. 1422a(a)(3)(B), 1422b(a)(1), 1430(g).

100. Revise § 944.1 to read as follows:

§ 944.1 Definitions.

For purposes of this part:

Advisory Council means the Advisory Council each Bank is required to establish pursuant to section 10(j)(11) of the Act (12 U.S.C. 1430(j)(11)) and part 951 of this chapter.

CRA means the Community Reinvestment Act of 1977, as amended (12 U.S.C. 2901, et seq.).

CRA evaluation means the public disclosure portion of the CRA performance evaluation provided by a member's appropriate Federal banking agency.

Displaced homemaker means an adult who has not worked full-time, full-year in the labor force for a number of years and, during that period, worked primarily without remuneration to care for a home and family, and currently is unemployed or underemployed and is experiencing difficulty in obtaining or upgrading employment.

First-time homebuyer means:

(1) An individual and his or her spouse, if any, who has had no present ownership interest in a principal residence during the three-year period prior to purchase of a principal residence.

(2) A displaced homemaker who, except for owning a residence with his or her spouse or residing in a residence owned by his or her spouse, meets the requirements of paragraph (1) of this definition.

(3) A single parent who, except for owning a residence with his or her spouse or residing in a residence owned by his or her spouse, meets the requirements of paragraph (1) of this definition.

Long-term advance means an advance with a term to maturity greater than one year.

Restriction on access to long-term advances means a member may not borrow long-term advances or renew any maturing advance for a term to maturity greater than one year.

Single parent means an individual who is unmarried or legally separated from a spouse and has custody or joint custody of one or more minor children or is pregnant.

Targeted community lending has the meaning set forth in § 952.1 of this chapter.

§ 944.2 [Amended]

101. Amend § 944.2:

a. In paragraph (b)(2) introductory text, by adding the word ''to'' immediately preceding the colon; and

b. In paragraph (b)(2)(i), by removing the words ''To each'' and adding, in their place, the word ''Each''.

§ 944.3 [Amended]

102. Amend § 944.3:

a. In paragraph (b)(2), second sentence, by removing the words ''federal financial supervisory agency'' and adding, in their place, the words ''Federal banking agency'';

b. In paragraph (c)(1)(i), by removing the word ''or'';

c. In paragraph (c)(1) (ii)(B), by adding the word ''or'' immediately following the semi-colon;

d. In paragraph (c)(1)(ii)(C), by removing the word ''or'' that immediately follows the semi-colon; and

e. In paragraph (c)(2) of § 944.3, in the third sentence, by removing the word ''§ 936.5'' and adding, in their place, the word ''§ 944.5''.

§ 944.5 [Amended]

103. Amend § 944.5:

a. In paragraph (b), by removing the comma following the word ''advances'' and adding, in its place, a colon;

b. In paragraph (d)(1)(i) of § 944.5:

i. In the third sentence, by removing the words ''federal financial supervisory agency, or the National Credit Union Administration for a federally insured credit union member, or the member's *appropriate state regulator*'' and, in their place, adding the words ''Federal banking agency, or the member's appropriate state regulator''; and

ii. By removing the last sentence; and

c. In paragraph (d)(3), by removing the comma following the words ''paragraph (d)'' and adding, in its place, a colon.

§ 944.6 [Amended]

104. Amend § 944.6:

a. In paragraph (a)(3) by removing the word ''and'' that immediately follows the semi-colon;

b. In paragraph (a)(4), by adding the word ''and'' immediately following the semi-colon; and

c. In paragraph (a)(5)(iii), by removing the words ''nonmember borrowers'' and adding, in their place, the words ''housing associates''.

§ 944.7 [Amended]

105. Amend § 944.7 by adding the words ''(12 U.S.C. 1430(j)(11))'' between the words ''of the Act'' and the words ''shall include''.

PART 950—ADVANCES

106. Revise the authority citation for part 950 to read as follows:

Authority: 12 U.S.C. 1422a(a)(3), 1422b(a)(1), 1426, 1429, 1430, 1430b, 1431.

107. Amend § 950.1 by:

a. Removing the definitions of the terms ''Advance'', ''Affordable Housing Program or AHP'', ''Appropriate Federal banking agency'', ''Community Investment Cash Advance or CICA'', ''FDIC'', ''GAAP'', ''HUD'', ''OCC'', ''OTS'', and ''State''; and

b. Adding, in correct alphabetical sequence, definitions for the terms ''CFI member'' and ''Credit Union'' and revising the definitions for the terms ''Depository institution'', ''Dwelling unit'', ''Insurer'', ''Long-term advance'', ''Multi-family property'', ''Nonresidential real property'', ''Small business loans'', ''State housing finance agency or SHFA'' and ''Tangible capital'' to read as follows:

§ 950.1 Definitions.

As used in this part:

* * * * *

CFI member means a member that is a Community Financial Institution, as defined in § 925.1 of this chapter, except that, for purposes of this part, the member's average of total assets over three years shall be calculated by the Bank:

(1) Based on the average of total assets drawn from the institution's regulatory financial reports (as defined in § 925.1 of this chapter) filed with its appropriate regulator (as defined in § 925.1 of this chapter) for the three most recent calendar year-ends; and

(2) Annually, and shall be effective April 1 of each year.

Credit union means a credit union as defined in section 101 of the Federal Credit Union Act (12 U.S.C. 1752).

Depository institution means a bank, savings association, or credit union.

Dwelling unit means a single room or a unified combination of rooms designed for residential use by one household.

* * * * *

Insurer means the FDIC for insured depository institutions, as defined section 3(c)(2) of the Federal Deposit Insurance Act (12 U.S.C. 1813(c)(2)), and the NCUA for federally-insured credit unions.

Long-term advance means an advance with an original term to maturity greater than five years.

* * * * *

Multifamily property means:

(1)(i) Real property that is solely residential and which includes five or more dwelling units; or

(ii) Real property which includes five or more dwelling units with commercial units combined, provided the property is primarily residential.

(2) Multifamily property as defined in this section includes nursing homes, dormitories and homes for the elderly.

Nonresidential real property means real property not used for residential purposes, including business or industrial property, hotels, motels, churches, hospitals, educational and charitable institutions, clubs, lodges, association buildings, golf courses, recreational facilities, farm property not containing a dwelling unit, or similar types of property, except as otherwise determined by the Finance Board in its discretion.

* * * * *

Small business loans means commercial and industrial loans that are within the legal lending limit of the reporting CFI member and that are reported on either: Schedule RC–C, Part I, item 1.e or Schedule RC–C, Part I, item 4 of the Report of Condition and Income filed by insured commercial banks and FDIC-supervised savings banks; or Schedule SC300, SC303 or SC306 of the Thrift Financial Report filed by savings associations (or equivalent successor schedules).

* * * * *

State housing finance agency or *SHFA* has the meaning set forth in § 926.1 of this chapter.

* * * * *

Tangible capital means:

(1) Capital, calculated according to GAAP, less ''intangible assets'' except for purchased mortgage servicing rights to the extent such assets are included in a member's core or Tier 1 capital, as reported in the member's Thrift Financial Report for members whose primary federal regulator is the OTS, or as reported in the Report of Condition and Income for members whose primary federal regulator is the FDIC, the OCC, or the FRB.

(2) Capital calculated according to GAAP, less intangible assets, as defined by a Bank for members that are not regulated by the OTS, the FDIC, the OCC, or the FRB; provided that a Bank shall include a member's purchased mortgage servicing rights to the extent such assets are included for the purpose of meeting regulatory capital requirements.

§ 950.2 [Amended]

108. Amend the heading to paragraph (d) of § 950.2 by removing the words ''Approval—By the Bank's board of directors'' and, in their place, adding the words ''Form of applications and agreements''.

§ 950.4 [Amended]

109. Amend § 950.4:

a. In paragraph (e)(1), by removing the word ''monthly'' and, in its place, adding the word ''quarterly'';

b. In paragraph (e)(2), by removing the word ''monthly'' and, in its place, adding the word ''quarterly'';

c. In paragraph (g)(2)(i), by removing the word ''950.4(b)(2)'' and, in its place, adding the word ''950.2(b)(2)''; and

d. In paragraph (g)(2)(ii), by removing the word ''950.4(a)'' and, in its place, adding the word ''950.2(a)''.

110. Amend § 950.7 by revising paragraphs (a)(1)(ii)(D), (a)(2)(i) and (e)(3) to read as follows:

§ 950.7 Collateral.

(a) * * *

(1) * * *

(ii) * * *

(D) Such other high-risk securities as the Finance Board in its discretion may determine.

(2) * * *

(i) Mortgage-backed securities issued or guaranteed by Freddie Mac, Fannie Mae, Ginnie Mae, or any other agency of the United States Government;

* * * * *

(e) * * *

(3) The security interest of the Bank in such member's Bank stock shall be entitled to the priority provided for in section 10(e) of the Act (12 U.S.C. 1430(e)).

* * * * *

§ 950.8 [Amended]

111. Amend paragraph (a) of § 950.8 by removing the words ''such member'' and adding, in their place, the words ''a member''.

§ 950.9 [Amended]

112. Amend paragraph (a)(1) of § 950.9 by removing the words ''950.4(c)'' and adding, in their place, the words ''950.2(c)''.

§ 950.11 [Amended]

113. Amend § 950.11, in the first sentence of paragraph (b)(1), by adding the words ''(12 U.S.C. 1426(b)(1))'' between the words ''6(b)(1) of the Act'' and the words ''is maintained''.

§ 950.14 [Amended]

114. Amend § 950.14 by revising paragraphs (b)(2)(i)(A), (b)(2)(i)(C), (c)(2)(i), (c)(2)(ii), (e)(2) and (e)(3) to read as follows:

§ 950.17 Advances to housing associates.

* * * * *

(b) * * *

(2) * * *

(i) * * *

(A) The collateral described in § 950.7(a)(1) or (2).

(B) * * *

(C) The other real estate-related collateral described in § 950.7(a)(4), provided that such collateral comprises mortgage loans on one-to-four family or multifamily residential property.

* * * * *

(c) * * *

(2) *Advance pricing.* (i) A Bank shall price advances to housing associates in accordance with the requirements for pricing advances to members set forth in § 950.3(b). Wherever the term ''member'' appears in § 950.3(b), the term shall be construed also to mean ''housing associate.''

(ii) A Bank shall apply the pricing criteria identified in § 950.5(b)(2) equally to all of its member and housing associate borrowers.

* * * * *

(e) * * *

(2) *Verification of eligibility.* A Bank may, from time to time, require a housing associate to provide evidence that it continues to satisfy all of the

eligibility requirements of the Act, this subpart and part 926 of this chapter.

(3) *Loss of eligibility.* A Bank shall not extend a new advance or renew an existing advance to a housing associate that no longer meets the eligibility requirements of the Act, this subpart and part 926 of this chapter until the entity has provided evidence satisfactory to the Bank that it is in compliance with such requirements.

§ 950.25 [Amended]

115. Amend paragraph (b) of § 950.25 by removing the words ''debtor/creditor'' and adding, in their place, the words ''creditor/debtor''.

PART 951—AFFORDABLE HOUSING PROGRAM

116. The authority citation for part 951 continues to read as follows:

Authority: 12 U.S.C. 1430(j).

117. Amend § 951.1:

a. By removing the definitions of the terms ''Advance'', ''AHP or Program'', ''CIP'', ''HUD'' and ''State''; and

b. By revising the definition of the word ''Habitable'' and adding, in correct alphabetical sequence, a definition for the word ''Program'' to read as follows:

§ 951.1 Definitions.

As used in this part:

* * * * *

Habitable means suitable for occupancy, taking into account local health, safety and building codes.

* * * * *

Program means the Affordable Housing Program.

* * * * *

§ 951.4 [Amended]

118. Amend paragraph (g) of § 951.4 by removing the words ''Council members'' and adding, in their place, the words ''Council members''.

§ 951.5 [Amended]

119. Amend § 951.5:

a. In paragraph (b)(2)(i)(A) of by adding a comma immediately following the words ''other sources'';

b. In paragraph (b)(7)(i), by removing the words ''951.13 (c)(4)'' and adding, in their place, the words ''951.3(c)(4)''; and

c. In paragraph (b)(7)(ii), by removing the words ''951.13 (c)(5)'' and adding, in their place, the words ''951.3(c)(5)''.

§ 951.9 [Amended]

120–121. Amend § 951.9, in the introductory text, by removing the words ''*Modification procedure.*''.

§ 951.10 [Amended]

122. Amend paragraph (c)(1) of § 951.10, in the introductory text, by italicizing (designating as a heading) the words ''Owner-occupied projects''.

§ 951.12 [Amended]

123. Amend paragraph (h) of § 951.12 by removing the words ''Procedures for Review of Disputed Supervisory Determinations'' and adding, in their place, the words ''procedures for review of disputed supervisory determinations set forth in § 907.9 of this chapter''.

§ 951.16 [Amended]

124. Amend § 950.16, in the first sentence, by adding the words ''(12 U.S.C. 1430(j))'' between the words ''of the Act'' and the words ''and the provisions''.

PART 952—COMMUNITY INVESTMENT CASH ADVANCE PROGRAMS

125. Amend the authority citation for part 952 by revising it to read as follows:

Authority: 12 U.S.C. 1422b(a)(1), 1430.

§§ 952.1, 952.2, 952.3 [Redesignated]

126. Redesignate §§ 952.1, 952.2 and 952.3 as §§ 952.2, 952.3 and 952.1, respectively.

§ 952.1 [Amended]

127. Amend newly designated § 952.1:

a. By removing the definitions of the terms ''Advance'', ''AHP'', ''CICA'', ''CIP'' and ''HUD'';

b. By moving the definition of ''Targeted community lending'' into the correct alphabetical sequence; and

c. In the definition of ''CICA program or Community Investment Cash Advance program'', by removing both references to ''§ 952.3'' and adding, in its place, references to ''§ 952.1''.

§ 952.2 [Amended]

128. Amend newly designated § 952.2:

a. In the first sentence, by adding the words ''(12 U.S.C. 1430(j)(10))'' between the words ''of the Act'' and the words ''authorizes the Banks''; and

b. By removing the words ''(See 12 U.S.C. 1430(j)(10))'' that immediately follow the first sentence.

129. Revise newly designated § 952.3 to read as follows:

§ 952.3 Purpose.

The purpose of this part is to identify targeted community lending projects that the Banks may support through the establishment of CICA programs under section 10(j)(10) of the Act (12 U.S.C. 1430(j)(10)). Pursuant to this part, a Bank may offer Rural Development Funding (RDF) or Urban Development Funding (UDF) programs, or both, for targeted community lending using the targeted beneficiaries or targeted income levels specified in § 952.1, without prior Finance Board approval. A Bank also may offer other CICA programs for targeted community lending using targeted beneficiaries and targeted income levels other than those specified in § 952.1, established by the Bank with the prior approval of the Finance Board. In addition, a Bank shall offer CICA programs under section 10(i) of the Act (12 U.S.C. 1430(i)) (Community Investment Program (CIP)) and section 10(j) of the Act (12 U.S.C. 1430(j)) (Affordable Housing Program (AHP)). A Bank may provide advances or grants under its CICA programs except for CIP programs, under which a Bank may only provide advances.

§ 952.5 [Amended]

130. Amend § 952.5:

a. In paragraph (a)(3), by removing the reference to ''§ 952.3'' and adding, in its place, a reference to ''§ 952.1'';

b. In paragraph (a)(4), by removing the reference to ''§ 952.3'' and adding, in its place, a reference to ''§ 952.1'';

c. In paragraph (d)(1), by removing the reference to ''§ 950.6'' and adding, in its place, a reference to ''§ 950.5'';

d. In paragraph (d)(4)(ii), by removing the reference to ''§ 950.24'' and adding, in its place, a reference to ''§ 950.17''; and

e. In paragraph (d)(6)(i), by removing the word ''fund'' and adding, in its place, the words ''Discount Fund''.

PART 955—ACQUIRED MEMBER ASSETS

131. The authority citation for part 955 continues to read as follows:

Authority: 12 U.S.C. 1422a(a)(3), 1422b(a), 1430, 1430b, 1431.

132. Revise § 955.1 to read as follows:

§ 955.1 Definitions.

As used in this part:

Affiliate means any business entity that controls, is controlled by, or is under common control with, a member.

Expected losses means the base loss scenario in the methodology of an NRSRO applicable to that type of AMA asset.

Residential real property has the meaning set forth in § 950.1 of this chapter.

§ 955.3 [Amended]

133–134. Amend § 955.3 by:

a. In paragraph (b)(2)(ii), by removing the word ''and'' that follows the semi-colon; and

b. In paragraph (b)(3), by adding the word ''and'' immediately following the semi-colon.

PART 956—INVESTMENTS

135. The authority citation for part 956 continues to read as follows:

Authority: 12 U.S.C. 1422a(a)(3), 1422b(a), 1429.

136. Revise § 956.1 to read as follows:

§ 956.1 Definitions.

As used in this part:

Deposits in banks or trust companies has the meaning set forth in § 965.1 of this chapter.

Derivative contract means generally a financial contract the value of which is derived from the values of one or more underlying assets, reference rates, or indices of asset values, or credit-related events. Derivative contracts include interest rate, foreign exchange rate, equity, precious metals, commodity, and credit contracts, and any other instruments that pose similar risks.

Investment grade means:

(1) A credit quality rating in one of the four highest credit rating categories by an NRSRO and not below the fourth highest credit rating category by any NRSRO; or

(2) If there is no credit quality rating by an NRSRO, a determination by a Bank that the issuer, asset or instrument is the credit equivalent of investment grade using credit rating standards available from an NRSRO or other similar standards.

Repurchase agreement means an agreement between a seller and a buyer whereby the seller agrees to repurchase a security or similar securities at an agreed upon price, with or without a stated time for repurchase.

§ 956.2 [Amended]

137. Amend § 956.2:

a. In paragraph (c), by removing the words ''the Federal National Mortgage Association or the Government National Mortgage Association'' and adding, in their place, the words ''Fannie Mae or Ginnie Mae''; and

b. In paragraph (d), by removing the words ''the Federal Home Loan Mortgage Corporation pursuant to 12 U.S.C. 1454 or 1455'' and adding, in their place, the words ''Freddie Mac pursuant to section 305 or 306 of the Federal Home Loan Mortgage Corporation Act (12 U.S.C. 1454 or 1455)''.

§ 956.3 [Amended]

138. Amend paragraph (a)(4)(iii) of § 956.3 by removing the words ''a NRSRO'' and adding, in their place, the words ''an NRSRO''.

§ 956.4 [Amended]

139. Amend the introductory text of § 956.4 by removing the words ''a NRSRO'' and adding, in their place, the words ''an NRSRO''.

§ 956.5 [Amended]

140. Amend § 956.5:

a. In paragraph (b), by removing the words ''12 CFR part 961'' and adding, in their place, the words ''part 960 of this chapter''; and

b. In paragraph (e), by removing the word ''Commitment'' and adding, in its place, the words ''Commitments''.

PART 960—[REMOVED]

141. Under the authority of 12 U.S.C. 1422b(a), part 960 is removed.

PART 961—[REDESIGNATED]

142. Part 961 is redesignated as part 960.

PART 960—STANDBY LETTERS OF CREDIT

143. The authority citation for newly designated part 960 continues to read as follows:

Authority: 12 U.S.C. 1422b, 1429, 1430, 1430b, 1431.

144. Amend newly designated § 960.1 by adding, in correct alphabetical sequence, a definition for the term ''Investment grade'' to read as follows:

§ 960.1 Definitions.

* * * * *

Investment grade means:

(1) A credit quality rating in one of the four highest credit rating categories by an NRSRO and not below the fourth highest credit rating category by any NRSRO; or

(2) If there is no credit quality rating by an NRSRO, a determination by a Bank that the issuer, asset or instrument is the credit equivalent of investment grade using credit rating standards available from an NRSRO or other similar standards.

* * * * *

§ 960.2 [Amended]

145. Amend paragraph (b) of newly designated § 960.2 by removing the reference to ''§ 961.4(a)(2)'' and adding, in its place, a reference to ''§ 960.4(a)(2)''.

§ 960.4 [Amended]

146. Amend paragraph (c) of newly designated § 960.4 by adding the words ''(12 U.S.C. 1430, 1430b)'' between the words ''of the Act'' and the words ''and part 950''.

§ 960.5 [Amended]

147. Amend paragraph (b)(1) of newly-designated § 960.5 by removing the words ''961.2 or 961.3'' and adding, in their place, the words ''960.2 or 960.3''.

PART 965—SOURCES OF FUNDS

148. Revise the authority citation for part 965 to read as follows:

Authority: 12 U.S.C. 1422a, 1422b, 1431.

§ 965.1 [Amended]

149. Amend the definition of ''Deposits in banks or trust companies'' in § 965.1:

a. In paragraph (3)(ii) by removing the words ''Federal Deposit Insurance Corporation'' and adding, in their place, the word ''FDIC''; and

b. In paragraph (3)(iii) by removing the words ''Board of Governors of the Federal Reserve System'' and adding, in their place, the word ''FRB''.

§ 965.2 [Amended]

150. Amend the paragraph (b) of § 965.2 by removing the words ''950.24(b)(2)(i)(B), 950.24(d) or 961.4(a)(1)'' and adding, in their place, the words ''950.17(b)(2)(i)(B), 950.17(d) or 960.4(a)(1)''.

PART 966—CONSOLIDATED OBLIGATIONS

151. Revise the authority citation for part 966 to read as follows:

Authority: 12 U.S.C. 1422a, 1422b, 1431.

152. Revise § 966.1 to read as follows:

§ 966.1 Definitions.

As used in this part:

Non-complying Bank means a Bank that has failed to provide the liquidity certification as required under § 966.9(b)(1).

§ 966.2 [Amended]

153. Amend § 966.2:

a. In paragraph (a), in the last sentence, by removing the words ''of the Finance Board'' that follow the words ''Board of Directors''; and

b. In paragraph (b)(2) by removing the words ''part 985'' and, adding, in thier place, the words ''part 985 of this chapter''.

§ 966.3 [Amended]

154–155. Amend paragraph (a)(1) of § 966.3, in the last sentence, by removing the words ''12 U.S.C. 1431(g)'' and adding, in their place, the words ''section 11(g) of the Act (12 U.S.C. 1431(g))''.

§ 966.8 [Amended]

156. Amend paragraph (a) of § 966.8 by removing the word ''OF'' and adding, in its place, the words ''Office of Finance''.

§ 966.10 [Amended]

157. Amend § 966.10 by adding the words ''(12 U.S.C. 1431)'' between the words ''of the Act'' and the words ''and pursuant to this part''.

PART 975—COLLECTION, SETTLEMENT, AND PROCESSING OF PAYMENT INSTRUMENTS

158. The authority citation for part 975 continues to read as follows:

Authority: 12 U.S.C. 1430, 1431.

159. Redesignate §§ 975.1 and 975.2 as §§ 975.2 and 975.1, respectively.

160. Revise newly designated § 975.1 to read as follows:

§ 975.1 Definitions.

(a) Unless otherwise defined in this part, the terms used in this part shall conform, in the following order, to: Regulations of the Finance Board, the Uniform Commercial Code, regulations of the Federal Reserve System, and general banking usage.

(b) As used in this part:

Account processing includes charging, crediting, and settling of member or eligible institution accounts, excluding individual customer accounts.

Assets includes furniture and equipment, leasehold improvements, and capitalized start-up costs.

Data communication means transmitting and receiving of data to or from Banks, Federal Reserve offices, clearinghouse associations, depository institutions or their service bureaus, and other direct sending entities, arrangement for delivery of information; and telephone inquiry service.

Data processing includes capture, storage, and assembling of, and computation of, data from payment instruments received from Federal Reserve offices, Banks, clearinghouse associations, depository institutions, and other direct lending entities.

Eligible institution means any institution that is eligible to make application to become a member of a Bank under section 4 of the Act (12 U.S.C. 1424), including any building and loan association, savings and loan association, cooperative bank, homestead association, insurance company, savings bank, or any insured depository institution (as defined in section 2(12) of the Act (12 U.S.C. 1422(12))), regardless of whether the institution applies for or would be approved for membership.

Issuance of forms means the designation and distribution of standardized forms for use in collection, processing, and settlement services.

Presentment means a demand for acceptance or payment made upon the maker, acceptor, drawee or other payor by or on behalf of the holder, and may involve the use of electronic transmission of an instrument or item or transmission of data from the instrument or item by electronic or mechanical means.

Statement packaging includes receiving statement information from members or eligible institutions or their service bureaus on respective customer cycle dates; printing statements; matching customer account statements; packaging the statements with appropriate items and informational materials, as authorized by individual members and eligible institutions, for distribution to their customers; sending the packages to the members or eligible institutions or mailing the packages directly to their customers.

Storage services includes filing, storage, and truncation of items.

Transportation of items includes transporting items from Federal Reserve offices, other Banks' clearinghouse associations, depository institutions, and other direct sending entities to a Bank; forwarding items to financial institutions after sorting and forwarding cash items or return items to Federal Reserve offices and other sending entities.

§ 975.2 [Amended]

161. Amend newly designated § 975.2:

a. In paragraph (a) by removing the words ''(12 U.S.C. 1431(e)(2)) (Bank Act)'' and adding, in their place, the words ''(12 U.S.C. 1431(e)(2))''; and

b. In paragraph (b) by:

i. Removing the words ''Bank Act'' and adding, in their place, the word ''Act''; and

ii. Adding the words ''(12 U.S.C. 1431(e)(2))'' between the words ''of the Act'' and the words ''shall be governed''.

162–163. Revise § 975.3 to read as follows:

§ 975.3 General provisions.

The Banks are authorized to:

(a) Engage in, be agents or intermediaries for, or otherwise participate or assist in, the processing, collection, and settlement of checks, drafts, or any other negotiable or nonnegotiable items and instruments of payment drawn on eligible institutions or Bank members; and

(b) Be drawees of checks, drafts, and other negotiable and nonnegotiable items and instruments issued by eligible institutions or Bank members.

§ 975.4 [Amended]

164. Amend § 975.4, in the introductory text, by removing the words '', as defined in § 975.2''.

PART 978—BANK REQUESTS FOR INFORMATION

165. The authority citation for part 978 continues to read as follows:

Authority: 12 U.S.C. 1422b(a), 1442.

166. Amend § 978.1 by revising the definition of ''Financial regulatory agency'' to read as follows:

§ 978.1 Definitions.

* * * * *

Financial regulatory agency means any of the following:

(1) The Department of the Treasury, including either the OCC or the OTS;

(2) The FRB;

(3) The NCUA; or

(4) The FDIC.

* * * * *

§ 978.2 [Amended]

167. Amend § 978.2 by removing the words ''of the Act, 12 U.S.C. 1442'' and adding, in their place, the words ''of the Act (12 U.S.C. 1442)''.

§ 978.4 [Amended]

168. Amend § 978.4, in the second sentence, by removing the words ''of the Act, 12 U.S.C. 1442, as amended,'' and adding, in their place, the words ''of the Act (12 U.S.C. 1442)''.

§ 978.7 [Amended]

169. Amend § 978.7 by removing the words ''of the Act, 12 U.S.C. 1440'' from paragraph (d)(1) and adding, in their place, the words ''of the Act (12 U.S.C. 1440)''.

PART 980—NEW BUSINESS ACTIVITIES

170. The authority citation for part 980 continues to read as follows:

Authority: 12 U.S.C. 1422a(a)(3), 1422b(a), 1431(a), 1432(a).

§ 980.3 [Amended]

171. Amend § 980.3:

a. In paragraph (a)(3)(iii), by adding the word ''and'' immediately after the semi-colon; and

b. In paragraph (a)(3)(iv), by removing the word ''and'' that immediately follows the semi-colon.

PART 985—THE OFFICE OF FINANCE

172. An authority citation for part 985 is added to read as follows:

Authority: 12 U.S.C. 1422b(b)(2), 1431(a), 1431(c), 1432(a).

173. Revise § 985.1 to read as follows:

§ 985.1 Definitions.

As used in this part:

Chair means the chairperson of the board of directors of the Office of Finance.

Managing Director means the managing director of the Office of Finance.

§ 985.3 [Amended]

174. Amend paragraph (d) of § 985.3 by removing the word ''(REFCorp)'' and adding, in its place, the word ''(REFCORP)''.

§ 985.6 [Amended]

175. Amend paragraph (d) of § 985.6 by removing the words ''Nationally Recognized Statistical Rating Organizations'' and adding, in their place, the words ''NRSROs''.

§ 985.8 [Amended]

176. Amend paragraph (d)(4)(i) of § 985.8 by removing the reference to ''§ 917.6'' and adding, in its place, a reference to ''§ 917.7''.

PART 987—BOOK-ENTRY PROCEDURE FOR CONSOLIDATED OBLIGATIONS

177. The authority citation for part 987 continues to read as follows:

Authority: 12 U.S.C. 1422a, 1422b, 1431, 1435.

178. Amend § 987.1 by:

a. Removing the definition of the word ''State''; and

b. Revising the introductory text and the definition of the term ''Office of Finance'' to read as follows:

§ 987.1 Definitions.

As used in this part, unless the context otherwise requires or indicates:

* * * * *

Office of Finance means the Office of Finance acting as agent of the Banks in all matters relating to the issuance of Book-entry consolidated obligations and in the performance of all other necessary and proper functions relating to Book-entry consolidated obligations, including the payment of principal and interest due thereon.

* * * * *

§ 987.5 [Amended]

179. Amend paragraph (a) of § 987.5, in the second sentence, by removing the word ''a'' that appears between the words ''Security Entitlement or to'' and the words ''Book-entry consolidated obligations''.

PART 989—FINANCIAL STATEMENTS OF THE BANKS

180. Revise the authority citation for part 989 to read as follows:

Authority: 12 U.S.C. 1422a, 1422b, 1426, 1431, 1440.

181. Amend § 989.1 by revising the introductory text and the definition of ''Audit'' to read as follows:

§ 989.1 Definitions.

As used in this part:

Audit means an examination of the financial statements by an independent accountant in accordance with Generally Accepted Auditing Standards for the purpose of expressing an opinion thereon.

* * * * *

PART 995—FINANCING CORPORATION OPERATIONS

182. Revise the authority citation for part 995 to read as follows:

Authority: 12 U.S.C. 1441(b)(8), (c), (j).

183. Revise § 995.1 to read as follows:

§ 995.1 Definitions.

As used in this part:

Administrative expenses:

(1) Include general office and operating expenses such as telephone and photocopy charges, printing, legal, and professional fees, postage, courier services, and office supplies; and

(2) Do not include any form of employee compensation, custodian fees, issuance costs, or any interest on (and any redemption premium with respect to) any Financing Corporation obligations.

BIF-assessable deposit means a deposit that is subject to assessment for purposes of the Bank Insurance Fund under the Federal Deposit Insurance Act (12 U.S.C. 1811 *et seq.*), including a deposit that is treated as a deposit insured by the Bank Insurance Fund under section 5(d)(3) of the Federal Deposit Insurance Act (12 U.S.C. 1815(d)(3)).

Custodian fees means any fee incurred by the Financing Corporation in connection with the transfer of any security to, or maintenance of any security in, the segregated account established under section 21(g)(2) of the Act (12 U.S.C. 1441(g)(2)), and any other expense incurred by the Financing Corporation in connection with the establishment or maintenance of such account.

Directorate means the board established under section 21(b) of the Act (12 U.S.C. 1441(b)) to manage the Financing Corporation.

Exit fees means the amounts paid under sections 5(d)(2)(E) and (F) of the Federal Deposit Insurance Act (12 U.S.C. 1815(d)(2)(E) and (F)), and regulations promulgated thereunder (12 CFR part 312).

Insured depository institution has the same meaning as in section 3 of the Federal Deposit Insurance Act (12 U.S.C. 1813).

Issuance costs means issuance fees and commissions incurred by the Financing Corporation in connection with the issuance or servicing of Financing Corporation obligations, including legal and accounting expenses, trustee, fiscal, and paying agent charges, securities processing charges, joint collection agent charges, advertising expenses, and costs incurred in connection with preparing and printing offering materials to the extent the Financing Corporation incurs such costs in connection with issuing any obligations.

Non-administrative expenses means custodian fees, issuance costs, and interest on Financing Corporation obligations.

Obligations means debentures, bonds, and similar debt securities issued by the Financing Corporation under sections 21(c)(3) and (e) of the Act (12 U.S.C. 1421(c)(3) and (e)).

Receivership proceeds means the liquidating dividends and payments made on claims received by the Federal Savings and Loan Insurance Corporation Resolution Fund established under section 11A of the Federal Deposit Insurance Act (12 U.S.C. 1821a) from receiverships, that are not required by the Resolution Funding Corporation to provide funds for the Funding Corporation Principal Fund established under section 21B of the Act (12 U.S.C. 1441b).

SAIF-assessable deposit means a deposit that is subject to assessment for purposes of the Savings Association Insurance Fund under the Federal Deposit Insurance Act, including a deposit that is treated as a deposit insured by the Savings Association Insurance Fund under section 5(d)(3) of the Federal Deposit Insurance Act (12 U.S.C. 1815(d)(3)).

§ 995.3 [Amended]

184. Amend § 995.3, in the first sentence, by adding the words ''(12 U.S.C. 1441(g))'' between the words ''of the Act'' and the period.

§ 995.4 [Amended]

185. Amend paragraph (b) of § 995.4:

a. In the first sentence, by removing the word ''securities'' and, in its place, adding the words ''consolidated obligations''; and

b. In the second sentence, by removing the reference to ''part 912'' and, in its place, adding a reference to ''part 987''.

§ 995.7 [Amended]

186. Amend paragraph (b) of § 995.7, in the first sentence, by adding the words ''(12 U.S.C. 1441(b)(7)(B))'' between the words ''of the Act'' and the period.

§ 995.8 [Amended]

187. Amend § 995.8:

a. In paragraph (b)(2)(i), by adding the words ''(12 U.S.C. 1441(f)(2))'' between the words ''of the Act'' and the words ''and paragraph (b)(1)'';

b. In paragraph (b)(3)(i), by adding the words ''(12 U.S.C. 1441(f)(2))'' between the words ''of the Act'' and the words ''and paragraph (b)(1)'';

c. In paragraph (b)(3)(ii), by adding the words ''(12 U.S.C. 1441(f)(2))'' between the words ''of the Act'' and the words ''and paragraph (b)(1)'';

d. In paragraph (c)(1), by adding the words ''(12 U.S.C. 1441(f)(3))'' between the words ''of the Act'' and the period; and

e. In paragraph (d)(1), by adding the words ''(12 U.S.C. 1815(d)(2)(E))'' between the words ''Federal Deposit Insurance Act'' and the words ''or as otherwise''.

§ 995.10 [Amended]

188–190. Amend § 995.10 by adding the words ''(12 U.S.C. 1441)'' between the words ''of the Act'' and the words ''and this part''.

PART 996—AUTHORITY FOR BANK ASSISTANCE OF THE RESOLUTION FUNDING CORPORATION

191. The authority citation for part 996 continues to read as follows:

Authority: 12 U.S.C. 1422a, 1422b.

192a. Redesignate §§ 996.1 and 996.2 as §§ 996.2 and 996.3, respectively; and

192b. Add and reserve a new § 996.1.

§ 996.2 [Amended]

193. Amend newly designated § 996.2 by:

a. Adding the words ''(12 U.S.C. 1441b(b))'' between the words ''of the Act'' and the words '', officers, employees, or agents''; and

b. Adding the words ''(12 U.S.C. 1441b(c)(6)(B))'' between the words ''of the Act'' and the period.

§ 996.3 [Amended]

194. Amend newly designated § 996.3 by:

a. Removing the words ''(''SAIF member'')''; and

b. Adding the words ''(12 U.S.C. 1441b(e)(7))'' between the words ''of the Act'' and the period.

PART 997—RESOLUTION FUNDING CORPORATION OBLIGATIONS OF THE BANKS

195. Revise the authority citation for part 997 to read as follows:

Authority: 12 U.S.C. 1422b(a) and 1441b(f).

§ 997.1 [Amended]

196. Amend § 997.1:

a. In the definition of ''Quarterly present-value determination'', by removing the words ''requirements of 12 U.S.C. 1441b(f)(2)(C)(ii)'' and adding, in their place, the words ''requirements of section 21B(f)(2)(C)(ii) of the Act (12 U.S.C. 1441b(f)(2)(C)(ii))''; and

b. By removing the definition of ''REFCORP''.

Dated: February 13, 2002.

By the Board of Directors of the Federal Housing Finance Board.

John T. Korsmo,

Chairman.

[FR Doc. 02–5462 Filed 3–19–02; 8:45 am]

BILLING CODE 6725–01–P

DEPARTMENT OF TRANSPORTATION

Federal Aviation Administration

14 CFR Part 39

[Docket No. 2002–SW–09–AD; Amendment 39–12681; AD 2002–03–52]

RIN 2120–AA64

Airworthiness Directives; Eurocopter France Model AS350B, AS350BA, AS350B1, AS350B2, AS350B3, AS350C, AS350D, AS350D1, AS355E, AS355F, AS355F1, AS355F2, AS355N, and EC130 B4 Helicopters

AGENCY: Federal Aviation Administration, DOT.

ACTION: Final rule; request for comments.

SUMMARY: This document publishes in the **Federal Register** an amendment adopting Airworthiness Directive (AD) 2002–03–52, sent previously to all known U.S. owners and operators of Eurocopter France (ECF) helicopters by individual letters. This AD requires checking for a gap between the adhesive bead and the metal bushing bonded on each STARFLEX star arm end (arm end) and, if a gap is found, replacing the STARFLEX with an airworthy part. This AD is prompted by reports of bonding failure between the metal bushing and the arm end that led to severe vibrations resulting in several emergency landings. The actions specified in this AD are intended to detect bonding failure between the metal bushing and each arm end, severe lateral vibrations, and subsequent loss of control of the helicopter.

DATES: Effective April 4, 2002.

Comments for inclusion in the Rules Docket must be received on or before April 19, 2002.

ADDRESSES: Submit comments in triplicate to the Federal Aviation Administration (FAA), Office of the Regional Counsel, Southwest Region, Attention: Rules Docket No. 2002–SW–09–AD, 2601 Meacham Blvd., Room 663, Fort Worth, Texas 76137. You may also send comments electronically to the Rules Docket at the following address: *9-asw-adcomments@faa.gov.*

FOR FURTHER INFORMATION CONTACT: Gary Roach, Aviation Safety Engineer, FAA, Rotorcraft Directorate, Rotorcraft Standards Staff, Fort Worth, Texas 76193–0111, telephone (817) 222–5130, fax (817) 222–5961.

SUPPLEMENTARY INFORMATION: On February 6, 2002, the FAA issued Emergency AD (EAD) 2002–02–51, which required checking for a gap between the adhesive bead and the metal bushing on each arm end and, if a gap was found, replacing the STARFLEX. After issuing that EAD, we discovered the inadvertent omission of a STAFFLEX part number (P/N) from the applicability. That omission created an undue economic burden to the owners and operators of a significant percentage of the affected helicopters. That omission could have also created confusion to the personnel checking this flight critical part because there are a number of different STARFLEX configurations installed on the affected model helicopters. This condition, if not corrected, could have resulted in failure of the operators to properly conduct the check, failure to detect a gap between the adhesive bead and the metal bushing on the arm end, severe lateral vibrations, and subsequent loss of control of the helicopter. Therefore, to eliminate any confusion, the FAA issued superseding EAD 2002–03–52 on February 8, 2002, which contains the same requirements as EAD 2002–02–51 but limits the applicability of this AD to those helicopters that have STARFLEX, P/N 350A31–1916–00, installed.

The Direction Generale De L'Aviation Civile (DGAC), the airworthiness authority for France, notified the FAA that an unsafe condition may exist on these helicopter models. The DGAC advises of several occurrences of rapid bonding failure of the metal bushing installed on the arm ends, severe vibrations, and some emergency landings.

ECF has issued Alert Telex Nos. 05.00.38, 05.00.37R1, and 05.A.001R1, dated November 13, 2001 (Telex). The Telex specifies checking for a gap between the adhesive bead and the metal bushing bonded on each arm end. ECF is currently analyzing modifications to this assembly. The DGAC classified this Telex as mandatory and issued AD Nos. 2001–557–086(A) R1, 2001–558–064(A) R1, and 2001–559–002(A) R1, all dated November 28, 2001, to ensure the continued airworthiness of these helicopters in France.

These helicopter models are manufactured in France and are type certificated for operation in the United States under the provisions of 14 CFR 21.29 and the applicable bilateral agreement. Pursuant to the applicable bilateral agreement, the DGAC has kept the FAA informed of the situation described above. The FAA has examined the findings of the DGAC, reviewed all available information, and determined that AD action is necessary for products of these type designs that are certificated for operation in the United States.

This unsafe condition is likely to exist or develop on other helicopters of the same type designs registered in the United States. Therefore, the FAA issued Emergency AD 2002–03–52 to require, at specified intervals, checking for a gap between the adhesive bead and the metal bushing bonded on each of the arm ends and, if a gap is found, before further flight, replacing any STARFLEX with an airworthy part.

The short compliance time involved is required because the previously described critical unsafe condition can adversely affect the controllability or structural integrity of the helicopter. Therefore, checking for a gap between the adhesive bead and the metal bushing is required before each start of the engines and thereafter at intervals not to exceed 4 hours time-in-service, and this AD must be issued immediately.

An owner/operator (pilot) may perform the visual check required by paragraph (a) of this AD and must enter compliance with this AD into the helicopter maintenance records in accordance with 14 CFR 43.11 and 91.417(a)(2)(v). This AD allows a pilot to perform this check because it involves only a visual check for a gap between the adhesive bead and the metal bushing on each arm end and can be performed equally well by a pilot or a mechanic.

Since it was found that immediate corrective action was required, notice and opportunity for prior public comment thereon were impracticable and contrary to the public interest, and good cause existed to make the AD immediately effective by individual letters issued on February 8, 2002, to all known U.S. owners and operators of these helicopters. These conditions still exist, and the AD is hereby published in the **Federal Register** as an amendment to 14 CFR 39.13 to make it effective to all persons.

The FAA estimates that 30 helicopters will be affected by this AD, that it will take approximately 0.1 work hour to inspect the adhesive bead of the metal bushing bonded on each arm end, and that the average labor rate is $60 per work hour. Based on these figures, the total cost impact of the AD on U.S. operators is estimated to be $6 per helicopter and $180 for one inspection of the fleet. Assuming 10 additional inspections per week for all helicopters, the fleet cost per year will be $93,600.

Comments Invited

Although this action is in the form of a final rule that involves requirements affecting flight safety and, thus, was not preceded by notice and an opportunity for public comment, comments are invited on this rule. Interested persons are invited to comment on this rule by submitting such written data, views, or arguments as they may desire. Communications should identify the Rules Docket number and be submitted in triplicate to the address specified under the caption **ADDRESSES.** All communications received on or before the closing date for comments will be considered, and this rule may be amended in light of the comments received. Factual information that supports the commenter's ideas and suggestions is extremely helpful in evaluating the effectiveness of the AD action and determining whether additional rulemaking action would be needed.

Comments are specifically invited on the overall regulatory, economic, environmental, and energy aspects of the rule that might suggest a need to modify the rule. All comments submitted will be available in the Rules Docket for examination by interested persons. A report that summarizes each FAA-public contact concerned with the substance of this AD will be filed in the Rules Docket.

Commenters wishing the FAA to acknowledge receipt of their mailed comments submitted in response to this rule must submit a self-addressed, stamped postcard on which the following statement is made: ''Comments to Docket No. 2002–SW–09–AD.'' The postcard will be date stamped and returned to the commenter.

The regulations adopted herein will not have a substantial direct effect on the States, on the relationship between the national Government and the States, or on the distribution of power and responsibilities among the various levels of government. Therefore, it is determined that this final rule does not have federalism implications under Executive Order 13132.

The FAA has determined that this regulation is an emergency regulation that must be issued immediately to correct an unsafe condition in aircraft, and that it is not a ''significant regulatory action'' under Executive Order 12866. It has been determined further that this action involves an emergency regulation under DOT Regulatory Policies and Procedures (44 FR 11034, February 26, 1979). If it is determined that this emergency regulation otherwise would be significant under DOT Regulatory Policies and Procedures, a final regulatory evaluation will be prepared and placed in the Rules Docket. A copy of it, if filed, may be obtained from the Rules Docket at the location provided under the caption **ADDRESSES.**

List of Subjects in 14 CFR Part 39

Air transportation, Aircraft, Aviation safety, Safety.

Adoption of the Amendment

Accordingly, pursuant to the authority delegated to me by the Administrator, the Federal Aviation Administration amends part 39 of the Federal Aviation Regulations (14 CFR part 39) as follows:

PART 39—AIRWORTHINESS DIRECTIVES

1. The authority citation for part 39 continues to read as follows:

Authority: 49 U.S.C. 106(g), 40113, 44701.

§ 39.13 [Amended]

2. Section 39.13 is amended by adding a new airworthiness directive to read as follows:

2002–03–52 Eurocopter France: Amendment 39–12681. Docket No. 2002–SW–09–AD. Supersedes Emergency AD 2002–02–51, Docket No. 2002–SW–02–AD.

Applicability: Model AS350B, AS350BA, AS350B1, AS350B2, AS350B3, AS350C, AS350D, AS350D1, AS355E, AS355F, AS355F1, AS355F2, AS355N, and EC130 B4 helicopters, with STARFLEX, part number 350A31–1916–00, installed, certificated in any category.

Note 1: This AD applies to each helicopter identified in the preceding applicability

provision, regardless of whether it has been otherwise modified, altered, or repaired in the area subject to the requirements of this AD. For helicopters that have been modified, altered, or repaired so that the performance of the requirements of this AD is affected, the owner/operator must request approval for an alternative method of compliance in accordance with paragraph (d) of this AD. The request should include an assessment of the effect of the modification, alteration, or repair on the unsafe condition addressed by this AD; and if the unsafe condition has not been eliminated, the request should include specific proposed actions to address it.

Compliance: Required before each start of the engines and thereafter at intervals not to exceed 4 hours time-in-service.

To detect bonding failure between the metal bushing and each STARFLEX star arm end (arm end), which could result in severe lateral vibrations and subsequent loss of control of the helicopter, accomplish the following:

(a) Check for a gap between the adhesive bead and the metal bushing bonded on each of the three arm ends.

Note 2: Alert Telex Nos. 05.00.38, 05.00.37 R1, and 05.A.001 R1, dated November 13, 2001, pertain to the subject of this AD.

(b) An owner/operator (pilot) may perform the visual check required by paragraph (a) of this AD and must enter compliance with this AD into the helicopter maintenance records in accordance with 14 CFR 43.11 and 91.417(a)(2)(v). This AD allows a pilot to perform this check because it involves only a visual check for a gap between the adhesive bead and the bushing on each arm end and can be performed equally well by a pilot or a mechanic.

(c) If you find a gap between the adhesive bead and the metal bushing, replace the STARFLEX with an airworthy part before further flight.

(d) An alternative method of compliance or adjustment of the compliance time that provides an acceptable level of safety may be used if approved by the Manager, Regulations Group, Rotorcraft Directorate, FAA. Operators shall submit their requests through an FAA Principal Maintenance Inspector, who may concur or comment and then send it to the Manager, Regulations Group.

Note 3: Information concerning the existence of approved alternative methods of compliance with this AD, if any, may be obtained from the Regulations Group.

(e) Special flight permits will not be issued.

(f) This amendment becomes effective on April 4, 2002.

Note 4: The subject of this AD is addressed in Direction Generale De L'Aviation Civile (France) AD Nos. 2001–557–086(A) R1, 2001–558–064(A) R1, and 2001–559–002(A) R1, all dated November 28, 2001.

Issued in Fort Worth, Texas, on March 11, 2002.

David A. Downey,

Manager, Rotorcraft Directorate, Aircraft Certification Service.

[FR Doc. 02–6627 Filed 3–19–02; 8:45 am]

BILLING CODE 4910–13–U

DEPARTMENT OF TRANSPORTATION

Federal Aviation Administration

14 CFR Part 39

[Docket No. 2001–SW–20–AD; Amendment 39–12680; AD 2002–06–04]

RIN 2120–AA64

Airworthiness Directives; Eurocopter France Model AS350B, AS350B1, AS350B2, AS350B3, AS350BA, AS350C, AS350D, AS350D1, AS355E, AS355F, AS355F1, AS355F2, and AS355N Helicopters

AGENCY: Federal Aviation Administration, DOT.

ACTION: Final rule.

SUMMARY: This amendment adopts a new airworthiness directive (AD) for specified Eurocopter France (ECF) helicopters that requires replacing the tail rotor hub pitch change plate ''SNR'' bearing (bearing). This amendment is prompted by fatigue cracks found in the bearings. The actions specified by this AD are intended to prevent seizure of the bearing, loss of tail rotor effectiveness, and subsequent loss of control of the helicopter.

DATES: Effective April 24, 2002.

FOR FURTHER INFORMATION CONTACT: Jim Grigg, Aviation Safety Engineer, FAA, Rotorcraft Directorate, Rotorcraft Standards Staff, Fort Worth, Texas 76193–0110, telephone (817) 222–5490, fax (817) 222–5961.

SUPPLEMENTARY INFORMATION: A proposal to amend 14 CFR part 39 to include an AD for ECF Model AS350B, AS350B1, AS350B2, AS350B3, AS350BA, AS350C, AS350D, AS350D1, AS355E, AS355F, AS355F1, AS355F2, and AS355N helicopters was published in the **Federal Register** on November 28, 2001 (66 FR 59375). That action proposed replacing each bearing with an airworthy bearing at specified intervals. Also, that action noted that transferring a bearing from one model to another is permissible by complying with the transfer rules described in the Master Servicing Recommendations Chapter 05.99.

Interested persons have been afforded an opportunity to participate in the making of this amendment. No comments were received on the proposal or the FAA's determination of the cost to the public. The FAA has determined that air safety and the public interest require the adoption of the rule as proposed.

The FAA estimates that 514 helicopters of U.S. registry will be affected by this AD, that it will take approximately 5 work hours per helicopter to accomplish the required actions, and that the average labor rate is $60 per work hour. Required parts will cost approximately $90 per helicopter. Based on these figures, the total cost impact of the AD on U.S. operators is estimated to be $200,460.

The regulations adopted herein will not have a substantial direct effect on the States, on the relationship between the national Government and the States, or on the distribution of power and responsibilities among the various levels of government. Therefore, it is determined that this final rule does not have federalism implications under Executive Order 13132.

For the reasons discussed above, I certify that this action (1) is not a ''significant regulatory action'' under Executive Order 12866; (2) is not a ''significant rule'' under DOT Regulatory Policies and Procedures (44 FR 11034, February 26, 1979); and (3) will not have a significant economic impact, positive or negative, on a substantial number of small entities under the criteria of the Regulatory Flexibility Act. A final evaluation has been prepared for this action and it is contained in the Rules Docket. A copy of it may be obtained from the Rules Docket at the Office of the Regional Counsel, Southwest Region, 2601 Meacham Blvd., Room 663, Fort Worth, Texas.

List of Subjects in 14 CFR Part 39

Air transportation, Aircraft, Aviation safety, Safety.

Adoption of the Amendment

Accordingly, pursuant to the authority delegated to me by the Administrator, the Federal Aviation Administration amends 14 CFR part 39 as follows:

PART 39—AIRWORTHINESS DIRECTIVES

1. The authority citation for part 39 continues to read as follows:

Authority: 49 U.S.C. 106(g), 40113, 44701.

§ 39.13 [Amended]

2. Section 39.13 is amended by adding a new airworthiness directive to read as follows:

2002–06–04 Eurocopter France: Amendment 39–12680. Docket No. 2001–SW–20–AD.

Applicability: Model AS350B, AS350B1, AS350B2, AS350B3, AS350BA, AS350C, AS350D, AS350D1, AS355E, AS355F, AS355F1, AS355F2, and AS355N helicopters, with tail rotor hub pitch change plate ''SNR'' bearing (bearing) part number (P/N) 6010F234M16 (Eurocopter France P/N

704A33–651–190), installed, certificated in any category.

Note 1: This AD applies to each helicopter identified in the preceding applicability provision, regardless of whether it has been otherwise modified, altered, or repaired in the area subject to the requirements of this AD. For helicopters that have been modified, altered, or repaired so that the performance of the requirements of this AD is affected, the owner/operator must request approval for an alternative method of compliance in accordance with paragraph (d) of this AD. The request should include an assessment of the effect of the modification, alteration, or repair on the unsafe condition addressed by this AD; and if the unsafe condition has not been eliminated, the request should include specific proposed actions to address it.

Compliance: Required as indicated, unless accomplished previously.

To prevent seizure of the bearing, loss of tail rotor effectiveness, and subsequent loss of control of the helicopter, accomplish the following:

(a) For Model AS350B3 and AS355N helicopters, replace each bearing with an airworthy bearing as follows:

(1) Within 30 hours time-in-service (TIS) for each bearing that has 270 or more hours TIS as of the effective date of this AD.

(2) Before reaching 300 hours TIS for each bearing that has less than 270 hours TIS as of the effective date of this AD.

(3) Thereafter, replace each bearing at intervals not to exceed 300 hours TIS.

(b) For all other Model AS350 or AS355 helicopters, replace each bearing with an airworthy bearing as follows:

(1) Within 50 hours TIS for each bearing that has 1150 hours or more TIS as of the effective date of this AD.

(2) Before reaching 1200 hours TIS for each bearing that has less than 1150 hours TIS as of the effective date of this AD.

(3) Thereafter, replace each bearing at intervals not to exceed 1200 hours TIS.

Note 2: Eurocopter France Alert Telex Nos. 01.00.46 and 01.00.48, both dated February 22, 2001, pertain to the subject of this AD.

(c) When transferring a bearing from one model helicopter to another (refer to the equipment log card), adhere to the transfer rules described in the applicable master servicing recommendations. Remove each bearing from service at or before the service life limits given in paragraphs (a)(3) and (b)(3) of this AD.

Note 3: The Master Servicing Recommendations for the affected helicopters, Chapter 05.99, pertain to the subject of this AD.

(d) An alternative method of compliance or adjustment of the compliance time that provides an acceptable level of safety may be used if approved by the Manager, Regulations Group, Rotorcraft Directorate, FAA. Operators shall submit their requests through an FAA Principal Maintenance Inspector, who may concur or comment and then send it to the Manager, Regulations Group.

Note 4: Information concerning the existence of approved alternative methods of compliance with this AD, if any, may be obtained from the Regulations Group.

(e) Special flight permits may be issued in accordance with 14 CFR 21.197 and 21.199 to operate the helicopter to a location where the requirements of this AD can be accomplished.

Note 5: The subject of this AD is addressed in Direction Generale De L'Aviation Civile (France) AD Nos. 2001–073–061(A) and 2001–074–081(A), both dated March 21, 2001.

(f) This amendment becomes effective on April 4, 2002.

Issued in Fort Worth, Texas, on March 11, 2002.

David A. Downey,

Manager, Rotorcraft Directorate, Aircraft Certification Service.

[FR Doc. 02–6626 Filed 3–19–02; 8:45 am]

BILLING CODE 4910–13–U

DEPARTMENT OF TRANSPORTATION

Federal Aviation Administration

14 CFR Part 39

[Docket No. 2001–NE–20; Amendment 39–12641; AD 2002–02–13]

RIN 2120–AA64

Airworthiness Directives; CFM International, S.A. CFM56–5 Series Turbofan Engines; Correction

AGENCY: Federal Aviation Administration, DOT.

ACTION: Final rule; correction.

SUMMARY: This document makes a correction to Airworthiness Directive (AD) 2002–02–13, applicable to CFM International, S.A. CFM56–5 series turbofan engines that was published in the **Federal Register** on February 14, 2002 (67 FR 6850). The Amendment number is incorrect and this document corrects that number. In all other respects, the original document remains the same.

EFFECTIVE DATE: March 21, 2002.

FOR FURTHER INFORMATION CONTACT: James Rosa, Aerospace Engineer, Engine Certification Office, FAA, Engine and Propeller Directorate, 12 New England Executive Park, Burlington, MA 01803–5299; telephone (781) 238–7152, fax (781) 238–7199.

SUPPLEMENTARY INFORMATION: A final rule airworthiness directive applicable to CFM International, S.A. CFM56–5 series turbofan engines, was published in the **Federal Register** on February 14, 2002 (67 FR 6850). The following correction is needed:

On page 6850, in the first column, the Amendment No. in the fifth line of the Heading is corrected to read ''Amendment 39–12641.''

PART 39—[CORRECTED]

§ 39.13 [Corrected]

On page 6851, in the third column, in the heading of the AD, in the second line, correct ''Amendment 39–12461'' to read ''Amendment 39–12641''.

Issued in Burlington, MA, on March 12, 2002.

Francis A. Favara,

Acting Manager, Engine and Propeller Directorate, Aircraft Certification Service.

[FR Doc. 02–6530 Filed 3–19–02; 8:45 am]

BILLING CODE 4910–13–U

DEPARTMENT OF TRANSPORTATION

Federal Aviation Administration

14 CFR Part 39

[Docket No. 2000–NE–02; Amendment 39–12640; AD 2002–02–12]

RIN 2120–AA64

Airworthiness Directives; Rolls-Royce plc RB211–524G and –524H Series Turbofan Engines; Correction

AGENCY: Federal Aviation Administration, DOT.

ACTION: Final rule; correction.

SUMMARY: This document makes a correction to Airworthiness Directive (AD) 2002–02–12, applicable to Rolls-Royce plc (RR) RB211–524G and –524H series turbofan engines that was published in the **Federal Register** on February 14, 2002 (67 FR 6859). The Amendment number is incorrect and this document corrects that number. In all other respects, the original document remains the same.

EFFECTIVE DATE: March 21, 2002.

FOR FURTHER INFORMATION CONTACT: Keith Mead, Aerospace Engineer, Engine Certification Office, FAA, Engine and Propeller Directorate, 12 New England Executive Park, Burlington, MA 01803–5299; telephone (781) 238–7744 fax (781) 238–7199.

SUPPLEMENTARY INFORMATION: A final rule airworthiness directive applicable to Rolls-Royce plc (RR) RB211–524G and –524H series turbofan engines, was published in the **Federal Register** on February 14, 2002 (67 FR 6859). The following correction is needed:

On page 6859, in the first column, the Amendment No. in the fifth line of the Heading is corrected to read ''Amendment 39–12640.''

PART 39—[CORRECTED]

§ 39.13 [Corrected]

On page 6860, in the third column, in amendatory instruction 2, in the fifth line, and in the heading of the AD, beginning in the first line, correct ''Amendment 39–12460'' to read ''Amendment 39–12640''.

Issued in Burlington, MA, on March 12, 2002.

Francis A. Favara,

Acting Manager, Engine and Propeller Directorate, Aircraft Certification Service.

[FR Doc. 02–6531 Filed 3–19–02; 8:45 am]

BILLING CODE 4910–13–U

DEPARTMENT OF THE TREASURY

Customs Service

19 CFR Part 141

[T.D. 02–12]

RIN 1515–AD07

Payment of Duties on Certain Steel Products

AGENCY: Customs Service, Department of the Treasury.

ACTION: Temporary rule.

SUMMARY: This is a temporary rule that requires importers of the steel products described in the Presidential Proclamation 7529 of March 5, 2002, To Facilitate Positive Adjustment to Competition From Imports of Certain Steel Products published in the **Federal Register** (67 FR 10553) on March 7, 2002, to defer until April 19, 2002, the deposit of the estimated Customs duties described in the Proclamation on those products entered, or withdrawn from warehouse for consumption in the Customs territory of the United States on or after 12:01 a.m., EST, March 20, 2002 and up to April 4, 2002. This temporary rule implements an instruction of the President regarding the Presidential Proclamation.

EFFECTIVE DATE: This temporary rule is effective at 12:01 a.m. EST, March 20, 2002, and expires on April 20, 2002. This temporary rule applies to those steel products described in Presidential Proclamation 7529 of March 5, 2002, To Facilitate Positive Adjustment to Competition From Imports of Certain Steel Products published in the **Federal Register** (67 FR 10535) on March 7, 2002, that are entered or withdrawn from warehouse for consumption in the Customs territory of the United States on or after 12:01 a.m., EST, March 20, 2002 and up to April 4, 2002.

FOR FURTHER INFORMATION CONTACT: Millie Gleason, Office of Field Operations (202) 927–0625.

SUPPLEMENTARY INFORMATION:

Background

On March 5, 2002, President George W. Bush signed Presidential Proclamation 7529, a proclamation to facilitate positive adjustment to competition from imports of certain steel products. The Proclamation, which was issued under the President's authority under section 203 of the Trade Act of 1974, as amended (19 U.S.C. 2253), established increases in duty and a tariff-rate quota on imports of certain steel products. These safeguard measures were taken by the President to facilitate efforts by the domestic industry to make positive adjustment to import competition and provide greater economic and social benefits than costs. In the Proclamation, the President provides that if he determines within 30 days of the Proclamation that consultations between the United States and other World Trade Organization (WTO) members pursuant to Article 12.3 of the WTO Agreement on Safeguards have revealed a compelling reason to reduce, modify, or terminate a safeguard measure, he shall proclaim a corresponding reduction, modification, or termination of the safeguard measure.

In conjunction with the Proclamation, President Bush also sent a memorandum dated March 5, 2002, to the Secretary of the Treasury, the Secretary of Commerce, and the United States Trade Representative requiring action under section 203 of the Trade Act of 1974 (19 U.S.C. 2253). In that memorandum, the President instructed the Secretary of the Treasury, pursuant to section 505(a) of the Tariff Act of 1930 (19 U.S.C. 1505(a)), to prescribe by regulation a date no later than 45 days after the date of the memorandum at which estimated duties for the steel products described in the Proclamation that are entered or withdrawn from warehouse for consumption on or after 12:01 a.m., EST, March 20, 2002, and up to the 30th day after the signing of the memorandum shall be deposited. The purpose of this deferral of duty is to facilitate consultations between the United States and its foreign trading partners concerning the President's determination in accordance with Article 12.3 of the World Trade Organization Agreement on Safeguards.

The Proclamation and the Memorandum for the Secretary of the Treasury, the Secretary of Commerce, and the United States Trade Representative were published in the **Federal Register** (67 FR 10553, 67 FR 10593) on March 7, 2002. The effective date of the Proclamation is March 20, 2002.

This document sets forth the temporary regulation that the President instructed the Secretary of the Treasury to prescribe. It is noted that, pursuant to the regulation set forth below, only deposit of the duties required pursuant to Presidential Proclamation 7529 is deferred. The deferral of deposit of duties is not applicable to regular duties, including antidumping and countervailing duties, that are owed on the entry of products covered by the Proclamation.

Administrative Procedure Act, Regulatory Flexibility Act and Executive Order 12866

This regulation implements a direction of the President of the United States pursuant to his authority under section 203 of the Trade Act of 1974, as amended (19 U.S.C. 2253) to take all appropriate and feasible action within his power which he determines will facilitate efforts by the domestic industry to make a positive adjustment to import competition and provide greater economic and social benefits than costs. Accordingly, there is good cause that notice and public procedure are contrary to the public interest pursuant to 5 U.S.C. 553(b)(B). For the same reason, and because this temporary rule relieves importers from the obligation to deposit estimated duties, a delayed effective date is not required pursuant to 5 U.S.C. 553(d)(1) and (3). Moreover, because this temporary rule facilitates consultations between the United States and its foreign trading partners concerning the President's determination in accordance with Article 12.3 of the World Trade Organization Agreement on Safeguards, this rule involves a foreign affairs function of the United States that is exempt from notice and public procedure, as well as a delayed effective date, pursuant to 5 U.S.C. 553(a)(1).

Because no notice of proposed rulemaking is required, this temporary rule is not subject to the provisions of the Regulatory Flexibility Act (5 U.S.C. 601 *et seq.*) Nor is this temporary rule a ''significant regulatory action'' for purposes of E.O. 12866.

List of Subjects in 19 CFR Part 141

Customs duties and inspection, Entry of merchandise, Release of merchandise, Reporting and recordkeeping requirements.

Amendment to the Regulations

Part 141, Customs Regulations (19 CFR part 141) is amended as set forth below.

PART 141—ENTRY OF MERCHANDISE

1. The general authority citation for part 141 and the specific authority citation for subpart G continue to read, and a new specific authority for § 141.102(f) is added in appropriate numerical order to read as follows:

Authority: 5 U.S.C. 301; 19 U.S.C. 66, 1431, 1433, 1434, 1624; 46 U.S.C. App. 3, 91.

* * * * *

Subpart G also issued under 19 U.S.C. 1505;

* * * * *

Section 141.102(f) also issued under Presidential Proclamation 7529;

* * * * *

2. Section 141.102 is amended by adding a new paragraph (f) to read as follows:

§ 141.102 When deposit of estimated duties, estimated taxes, or both not required.

* * * * *

(f) *Steel products described in Presidential Proclamation 7529 of March 5, 2002, To Facilitate Positive Adjustment to Competition From Imports of Certain Steel Products.* An importer of the steel products described in Presidential Proclamation 7529 of March 5, 2002, To Facilitate Positive Adjustment to Competition From Imports of Certain Steel Products published in the **Federal Register** (67 FR 10553) on March 7, 2002, must defer until April 19, 2002, the deposit of the estimated Customs duties described in the Proclamation on those products entered, or withdrawn from warehouse for consumption in the Customs territory of the United States on or after 12:01 a.m., EST, March 20, 2002, and up to April 4, 2002.

Robert C. Bonner,

Commissioner of Customs.

Approved: March 18, 2002.

Timothy E. Skud,

Acting Deputy Assistant Secretary of the Treasury.

[FR Doc. 02–6807 Filed 3–18–02; 11:05 am]

BILLING CODE 4820–02–P

DEPARTMENT OF TRANSPORTATION

Federal Highway Administration

23 CFR Part 710

[FHWA Docket No. FHWA–2001–8624]

RIN 2125–AE82

Right-of-Way and Real Estate; Program Administration

AGENCY: Federal Highway Administration (FHWA), DOT.

ACTION: Final rule.

SUMMARY: This document amends the right-of-way regulations for federally assisted transportation projects to clarify that financial assistance provided by the FHWA may participate in relocation assistance benefits, provided by State and local agencies pursuant to State law, that are in addition to the relocation benefits prescribed by the Uniform Relocation Assistance and Real Property Acquisition Policies Act of 1970 (Uniform Act), as amended.

DATES: This final rule is effective April 19, 2002.

FOR FURTHER INFORMATION CONTACT: Mr. James E. Ware, Office of Real Estate Services, HEPR, (202) 366–2019, or Mr. Reid Alsop, Office of Chief Counsel, HCC–30, (202) 366–1371, FHWA 400 Seventh Street, SW., Washington, DC 20590. Office hours are from 7:45 a.m. to 4:15 p.m., e.t., Monday through Friday, except Federal holidays.

SUPPLEMENTARY INFORMATION:

Electronic Access

Internet users may access all comments received by the U.S. DOT Dockets, Room PL–401, by using the universal resource locator (URL): *http://dms.dot.gov*. It is available 24 hours each day, 365 days each year. Please follow the instructions online for more information and help.

An electronic copy of this document may be downloaded by using a modem and suitable communications software from the Government Printing Office's Electronic Bulletin Board Service at (202) 512–1661. Internet users may reach the **Federal Register**'s home page at *http://www.nara.gov/fedreg* and the Government Printing Office's database at: *http://www.access.gpo.gov/nara*.

Background

The FHWA provides funds to the States and other organizations to reimburse them for the costs they have incurred in constructing highways and other transportation related projects pursuant to title 23, United States Code. These projects frequently involve the acquisition of real property or the displacement of persons, businesses and farms. The Uniform Relocation Assistance and Real Property Acquisition Policies Act of 1970 (Uniform Act), as amended (42 U.S.C. 4601 *et seq.*) ensures the fair and equitable treatment of persons whose real property is acquired or who are displaced as a result of a Federal or federally-assisted project. The FHWA regulations dealing with reimbursement, and the acquisition and management of real property, are contained in 23 CFR part 710.

On May 9, 2001, we published a notice of proposed rulemaking (NPRM) at 66 FR 23636, to propose amending our right-of-way regulations for federally assisted transportation projects to provide clarification. The NPRM described the development of the current regulation, which revised FHWA's policy on participation in costs incurred by States in the acquisition of real property. Basically, the FHWA now participates in any acquisition costs that are required by State law. In the NPRM, we proposed to revise the regulations to clarify that Federal financial assistance, provided by the FHWA pursuant to title 23, U.S.C., may be applied to relocation assistance benefits provided by State and local agencies, pursuant to State law, that are in addition to the relocation benefits prescribed by the Uniform Act.

The FHWA believes that its participation in such relocation payments is permissible based on the FHWA's general authority to participate in the costs of ''construction,'' which is defined in 23 U.S.C. 101(a)(3) to include both costs of right-of-way acquisition and relocation assistance. We believe that the broad language in 23 CFR 710.203(b)(1) allows for this type of assistance; however, we received several inquiries regarding the FHWA's participation in relocation payments made by some States, pursuant to State law, that are in addition to those required by the Uniform Act. Therefore, in the NPRM we proposed amending section 710.203(b)(2) to clarify this matter.

Discussion of Comments

We received two written comments and one oral comment to the docket. The three commenters were from the Oregon, Washington, and Wisconsin State departments of transportation. The Washington DOT supported the proposed revision noting that the current Uniform Act benefits are inadequate for businesses. The Wisconsin DOT provided several technical comments. It noted that the

change would allow Federal participation in some increased payments provided by State law, but was also concerned that more local governments might avail themselves of Federal funds thereby increasing its oversight responsibilities.

The Oregon DOT provided a verbal comment that questioned whether the proposed clarification would allow the FHWA to participate in relocation payments to aliens not lawfully present in the United States (illegal aliens). While the intent of this clarification is to emphasize that States have the flexibility in using the FHWA funds to participate in relocation payments required by State law, in addition to those payments mandated by the Uniform Act, we do not believe that the FHWA should permit the participation of Federal funds in such relocation payments to persons who Congress has specifically excluded from Uniform Act coverage. The Congress stated specifically in section 4605(a) of the Uniform Act that, with limited exceptions, a person not lawfully present in the United States is not eligible to receive relocation assistance under the Uniform Act (42 U.S.C. 4605(a)).

The Congress clearly stated that displaced persons shall not be eligible to receive relocation payments or any other assistance under the Uniform Act if they are not lawfully present in the United States. Consistent with that prohibition we have provided in this final rule that the FHWA will not participate in relocation assistance and payments provided by States to aliens not lawfully present in the United States.

We have adopted the change proposed with a slight modification, as discussed above, to deny Federal participation in relocation assistance and payments provided to illegal aliens. The primary reason for this change remains the same as stated in the NPRM, to make it clear that FHWA participation policies concerning both State acquisition costs and State relocation costs are the same. That is, the FHWA will participate in those acquisition and relocation costs that are required by State law (except for relocation costs to illegal aliens).

This basic participation policy promotes program streamlining. It gives States flexibility in the use of Federal aid funds available to the States. Further, it eliminates administrative burdens that would result if it were necessary to analyze all acquisition and relocation costs and categorize them as either participating or nonparticipating for purposes of Federal assistance. Finally, if the NRPM were not adopted uncertainty would remain as to whether acquisition costs required by State law and relocation costs required by State law should be treated differently for purposes of Federal participation.

While we are aware of the Wisconsin DOT's concern regarding possible increased oversight, we note that one of the primary purposes of this change is to increase the ability of States to effectively manage their acquisition and relocation programs. In the absence of any further comments, we believe that the promulgation of this final rule is necessary to advance the important program streamlining objectives noted above.

Rulemaking Analyses and Notice

Executive Order 12866 (Regulatory Planning and Review) and DOT Regulatory Policies and Procedures

The FHWA has determined that this action is not a significant regulatory action within the meaning of Executive Order 12866, nor is it a significant regulatory policy and procedure. It is anticipated that the economic impact of this rulemaking will be minimal; therefore, a full regulatory evaluation is not required. The FHWA does not consider this action to be a significant regulatory action because this rule clarifies existing requirements relating to FHWA reimbursement for certain expenditures that are required by State law. Neither the individual or cumulative impact of this action is significant because this action would not alter the funding levels available to the states for Federal or federally assisted programs covered by title 23, U.S. Code.

Regulatory Flexibility Act

In compliance with the Regulatory Flexibility Act (Pub. L. 96–354, 5 U.S.C. 601–612), the agency has evaluated the effects of this rule on small entities and hereby certifies that this action will not have a significant economic impact on a substantial number of small entities. This action would merely clarify existing procedures.

Environmental Impact

The FHWA has also analyzed this action for the purpose of the National Environmental Policy Act (42 U.S.C. 4321 *et seq.*), and has determined that this action would not have any effect on the quality of the human environment.

Executive Order 13132 (Federalism)

The FHWA has analyzed this action in accordance with the principles and criteria contained in Executive Order 13132, and determined that this action does not have sufficient federalism implications to warrant the preparation of a federalism assessment. This rule clarifies that greater flexibility is placed at the State or local level in the use of Federal funds in recognition of State laws. Nothing in this document directly preempts any State law or regulation.

Executive Order 12372 (Intergovernmental Review)

Catalog of Federal Domestic Assistance Program Number 20.205, Highway Planning and Construction. The regulations implementing Executive Order 12372 regarding intergovernmental consultation on Federal programs and activities apply to this program.

Unfunded Mandates Reform Act

Under Section 202 of the Unfunded Mandates Reform Act of 1995 (Pub. L. 104–4, 109 Stat. 48), the FHWA must prepare a budgetary impact statement on any proposal or final rule that includes a Federal mandate that may result in estimated annual costs to State, local or tribal government of $100 million or more. The FHWA has determined that this rule will not result in estimated costs of $100 million or more to State, local, or tribal governments. This action simply clarifies existing requirements. Accordingly no additional costs to State, local or tribal governments are anticipated as a result of this action.

Executive Order 12988 (Civil Justice Reform)

This action meets applicable standards in sections 3(a) and 3(b)(2) of Executive Order 12988, Civil Justice Reform, to minimize litigation, eliminate ambiguity, and reduce burden.

Executive Order 13045 (Protection of Children)

The FHWA has analyzed this action under Executive Order 13045, Protection of Children from Environmental Health Risks and Safety Risks. This rule is not an economically significant rule and does not concern an environmental risk to health or safety that may disproportionately affect children.

Executive Order 12630 (Taking of Private Property)

This rule will not affect a taking of private or otherwise have taking implications under Executive Order 12630, Governmental Actions and Interference with Constitutionally Protected Property Rights.

Paperwork Reduction Act

This proposal contains no new collection of information requirements for purposes of the Paperwork Reduction Act of 1995, 44 U.S.C. 3501–3520.

Regulation Identification Number

A regulation identification number (RIN) is assigned to each regulatory action listed in the Unified Agenda of Federal Regulations. The Regulatory Information Service Center publishes the Unified Agenda in April and October of each year. The RIN contained in the heading of this document can be used to cross-reference this action with the Unified Agenda.

List of Subjects in 23 CFR Part 710

Grant programs-transportation, Highways and roads, Real property acquisition, Rights-of-way.

Issued on: March 13, 2002.

Mary E. Peters,

Federal Highway Administrator.

In consideration of the foregoing, the FHWA amends title 23, Code of Federal Regulations, Chapter 1, by revising Part 710 as set forth below:

PART 710—[AMENDED]

1. The authority citation for part 710 continues to read as follows:

Authority: 23 U.S.C. 101(a), 107, 108, 111, 114, 133, 142(f), 145, 156, 204, 210, 308, 315, 317, and 323; 42 U.S.C. 2000d *et seq.*, 4633, 4651–4655; 49 CFR 1.48(b) and (cc), 18.31, and parts 21 and 24; 23 CFR 1.32.

2. Revise § 710.203(b)(2) to read as follows:

§ 710.203 Funding and reimbursement.

* * * * *

(b) * * *

(2) *Relocation assistance and payments.* Usual costs and disbursements associated with the following:

(i) Relocation assistance and payments required under 49 CFR part 24, and

(ii) Relocation assistance and payments provided under the laws of the State that may exceed the requirements of 49 CFR part 24, except for relocation assistance and payments provided to aliens not lawfully present in the United States.

* * * * *

§ 710.409 [Amended]

3. Amend § 710.409(a) by revising the reference ''§ 710.403(c)'' to read ''§ 710.403(d)''.

[FR Doc. 02–6760 Filed 3–19–02; 8:45 am]

BILLING CODE 4910–22–P

DEPARTMENT OF THE TREASURY

Internal Revenue Service

26 CFR Parts 1 and 602

[TD 8985]

RIN 1545–AY02

Hedging Transactions

AGENCY: Internal Revenue Service (IRS), Treasury.

ACTION: Final regulations.

SUMMARY: This document contains final regulations relating to the character of gain or loss from hedging transactions. The regulations reflect changes to the law made by the Ticket to Work and Work Incentives Improvement Act of 1999. The regulations affect businesses entering into hedging transactions.

DATES: *Effective Date:* These regulations are effective March 20, 2002.

Applicability Dates: For dates of applicability of these regulations, see the discussion in the Dates of Applicability paragraph in the Supplementary Information portion of the preamble.

FOR FURTHER INFORMATION CONTACT: Elizabeth Handler, (202) 622–3930 or Viva Hammer at (202) 622–0869 (not toll-free numbers).

SUPPLEMENTARY INFORMATION:

Paperwork Reduction Act

The collections of information contained in these final regulations have been reviewed and approved by the Office of Management and Budget in accordance with the Paperwork Reduction Act of 1995 (44 U.S.C. 3507(d)) under control number 1545–1480. Some responses to these collections of information are mandatory, and others are required to obtain the benefit of the separate-entity election.

An agency may not conduct or sponsor, and a person is not required to respond to, a collection of information unless it displays a valid control number assigned by the Office of Management and Budget.

The estimated annual burden per respondent or recordkeeper varies from .1 to 40 hours, depending on individual circumstances, with an estimated average of 5.9 hours.

Comments concerning the accuracy of this burden estimate and suggestions for reducing this burden should be sent to the Internal Revenue Service, Attn: IRS Reports Clearance Officer, W:CAR:MP:FP:S, Washington, DC 20224, and to the Office of Management and Budget, Attn: Desk Officer for the Department of the Treasury, Office of Information and Regulatory Affairs, Washington, DC 20503.

Books or records relating to a collection of information must be retained as long as their contents may become material in the administration of any Internal Revenue law. Generally, tax returns and tax return information are confidential, as required by 26 U.S.C. 6103.

Background

This document contains amendments to 26 CFR Part 1 under section 1221 of the Internal Revenue Code (Code). Prior to amendment in 1999, section 1221 generally defined a capital asset as property held by the taxpayer other than: (1) Stock in trade or other types of assets includible in inventory; (2) property used in a trade or business that is real property or property subject to depreciation; (3) certain copyrights (or similar property); (4) accounts or notes receivable acquired in the ordinary course of a trade or business; and (5) U.S. government publications.

In 1994, the IRS published in the **Federal Register** (59 FR 36360) final Treasury regulations under section 1221 providing for ordinary character treatment for certain business hedges. The regulations generally apply to transactions that reduce risk with respect to ordinary property, ordinary obligations, and borrowings of the taxpayer and that meet certain identification requirements. (§ 1.1221–2). In 1996, the IRS published in the **Federal Register** (61 FR 517) final regulations on the character and timing of gain or loss from hedging transactions entered into by members of a consolidated group. In this preamble, the final regulations published in 1994 and 1996 are referred to collectively as the Treasury regulations.

On December 17, 1999, section 1221 was amended by section 532 of the Ticket to Work and Work Incentives Improvement Act of 1999 (113 Stat 1860) to provide ordinary gain or loss treatment for hedging transactions and consumable supplies. Section 1221(a)(7) provides ordinary treatment for hedging transactions that are clearly identified as such before the close of the day on which they were acquired, originated, or entered into.

The statute defines a hedging transaction as a transaction entered into by the taxpayer in the normal course of business primarily to manage risk of interest rate, price changes, or currency fluctuations with respect to ordinary property, ordinary obligations, or borrowings of the taxpayer. Sections 1221(b)(2)(A)(i) and (ii). The statutory

definition of hedging transaction also includes transactions to manage such other risks as the Secretary may prescribe in regulations. Section 1221(b)(2)(A)(iii). Further, the statute grants the Secretary the authority to provide regulations to address the treatment of nonidentified or improperly identified hedging transactions, and hedging transactions involving related parties (sections 1221(b)(2)(B) and (b)(3), respectively). The statutory hedging provisions are effective for transactions entered into on or after December 17, 1999. Congress intended that the hedging rules be the exclusive means through which the gains and losses from hedging transactions are treated as ordinary. S. Rep. No. 201, 106th Cong., 1st Sess. 25 (1999).

Section 1221(a)(8) provides that supplies of a type regularly consumed by the taxpayer in the ordinary course of a taxpayer's trade or business are not capital assets. That provision is effective for supplies held or acquired on or after December 17, 1999.

A notice of proposed rulemaking (REG–107047–00, 2001–14 I.R.B. 1002) was published in the **Federal Register** (66 FR 4738) on January 18, 2001. On May 16, 2001, the IRS held a public hearing on the proposed regulations. Written comments responding to the notice of proposed rulemaking were also received. In response to these comments, the proposed regulations were modified and as so modified are adopted as final regulations. The principal changes to the proposed regulations are discussed below.

Explanation of Provisions

Coordination With International Provisions of the Code

The provisions of these regulations generally apply to determine the character of gain or loss from transactions that are also subject to various international provisions of the Code. Paragraph (a)(4) of the regulations, however, provides that the character of gain or loss on section 988 transactions is not determined under these regulations because gain or loss on those transactions is ordinary under section 988(a)(1). In addition, no implication is intended as to what constitutes ''risk management'' or ''managing risk'' for purposes of proposed or final regulations under section 482.

Paragraph (a)(4) of the proposed regulations provided that the definition of a hedging transaction under § 1.1221–2(b) of the proposed regulations would apply for purposes of certain other international provisions of the Code only to the extent provided in regulations issued under those provisions. Technical changes have been made in the final regulations to eliminate references to proposed regulations as well as Code sections for which the relevant regulations have not been issued in final form. Subsequent regulations will specify the extent to which the rules relating to hedging transactions that are contained in § 1.1221–2 will be applicable for purposes of those other regulations and related Code sections.

Risk Management Standard

Several commentators noted that the proposed regulations used risk reduction as the operating standard to implement the risk management definition of hedging introduced by section 1221(b)(2)(A). These commentators found that risk reduction is too narrow a standard to encompass the intent of Congress which defined hedges to include transactions that manage risk of interest rate, price changes or currency fluctuations. They urged the IRS and Treasury to adopt a broader definition of hedging to reflect Congress' intent. With one exception, the commentators did not suggest a definition of risk management.

In response to these comments, the final regulations have been restructured to implement the risk management standard. No definition of risk management is provided, but instead, the rules characterize a variety of classes of transactions as hedging transactions because they manage risk. Risk reducing transactions still qualify as one class of hedging transactions, but there are also others. In addition, specific provision is made for the recognition of additional types of qualifying risk management transactions through published guidance or private letter rulings. Under the final regulations, as under the proposed regulations, transactions entered into for speculative purposes will not qualify as hedging transactions. See S. Rep. No. 201, 106th Cong., 1st Sess. 24 (1999).

Application on the Basis of Separate Business Units

The proposed regulations provided that a taxpayer has risk of a particular type only if it is at risk when all of its operations are considered. That is, risk must exist on a ''macro'' basis. For this purpose, under the proposed regulations, a taxpayer has to show that hedges of particular assets or liabilities, or groups of assets or liabilities, are reasonably expected to reduce the overall risk of the taxpayer's operations.

Commentators pointed out that this entity-based approach to hedging is no longer uniform business practice. Instead, businesses often conduct risk management on a business unit by business unit basis. In response to these comments, the final regulations permit the determination of whether a transaction manages risk to be made on a business unit basis provided that the business unit is within a single entity or consolidated return group that adopts the single-entity approach. An example was added to the final regulations in which for one taxpayer, the determination of whether hedging activities reduce risk is made at the business unit level. In the example, the conduct of risk management activities within separate business units is undertaken as part of a program to reduce the overall risk of the taxpayer's operations.

Fixed-to-Floating Interest Rate Hedges

Paragraph (c)(1) of the proposed regulations recognized that a transaction that economically converts an interest rate or price from a fixed rate or price to a floating rate or price may manage risk. Commentators suggested that the rule in the proposed regulations provides insufficient guidance in that it states only that fixed-to-floating interest rate or price hedges may be hedging transactions. In response to these comments, the regulations have been restructured to separately address interest rate hedges and price hedges.

Commentators suggested that in the case of interest rate conversions, a taxpayer may choose to convert from a floating to a fixed rate to fix the amount payable on the obligation. However, a taxpayer could also elect to convert from a fixed to a floating rate to insure that the value of the liability remained relatively constant. In response to these comments, the final regulations provide that a transaction that converts an interest rate from a fixed rate to a floating rate or from a floating rate to a fixed rate manages risk. With respect to fixed-to-floating price hedges, the final regulations adopt the proposed rules without change.

Transactions Not Entered Into Primarily To Manage Risk

Paragraph (c)(3) of the proposed regulations provided that the purchase or sale of certain assets will not qualify as a hedging transaction if the assets are not acquired primarily to manage risk. This rule was illustrated by the example of a taxpayer that has an interest rate risk from a floating rate borrowing and that acquires debt instruments bearing a comparable floating interest rate.

Although the taxpayer's interest rate risk from the floating rate borrowing may be reduced by the purchase of the floating rate debt instruments, the proposed regulations provided that the acquisition of the debt instruments is not made primarily to reduce risk and, therefore, is not a hedging transaction.

The IRS and Treasury understand that some employers may invest in assets (such as shares of a mutual fund) that are used as a reference investment for purposes of computing their liability to employees under a nonqualified deferred compensation plan. A question may arise whether such an investment may constitute a hedging transaction and, if so, whether income from the investment may be deferred by the employer until payments of deferred compensation are made to employees. See § 1.446–4(b); but compare *Albertson's, Inc.* v. *Commissioner*, 42 F.3d 537 (9th Cir. 1994).

The rule in the proposed regulations is based on § 1.1221–2(c)(1)(vii). The rule has been restated in the final regulations to refer specifically to investments in debt instruments, equity securities, and annuity contracts so as to provide greater certainty in its application. For this purpose certain transactions in instruments that are not themselves debt instruments may include a debt investment. See, *e.g.*, § 1.446–3(g)(4). Further, the final regulations provide that the IRS may identify by future published guidance specified transactions that are determined not to be entered into primarily to manage risk. An example has been added to the final regulations to illustrate that an investment in mutual fund shares in the case described in the preceding paragraph does not qualify as a hedging transaction. A similar example is added with respect to an investment in an annuity contract.

Hedging Risks Other Than Interest Rate or Price Changes, or Currency Fluctuations

Paragraph (c)(8) of the proposed regulations provided that the Commissioner may, by published guidance, provide that hedging transactions include transactions entered into to manage risks other than interest rate or price changes, or currency fluctuations.

The notice of proposed rulemaking solicited comments regarding the expansion of the definition of hedging transactions to include transactions that manage risks other than interest rate or price changes, or currency fluctuations with respect to ordinary property, ordinary obligations or borrowings of the taxpayer. Some comments were received in response to that request. Because the comments described hedging transactions that related to the general operating results of a business (such as gross sales) rather than specific ordinary property, ordinary obligations or borrowings of the taxpayer, the implementation of rules respecting such hedges would present a number of issues not easily dealt with by the rules contained in the final regulations. Thus, the expansion of the scope of operation of the hedging rules is not being proposed at this time, so as not to delay the publication of guidance on the matters that are covered by the final regulations. However, the IRS is continuing to consider whether to expand the definition of hedging transactions to cover hedges of such other risks. The IRS and Treasury invite comments on the types of risks that should be covered, including specific examples of derivative transactions that may be incorporated into future guidance, as well as the appropriate timing of inclusion of gains and losses with respect to such transactions. Send submissions to: CC:ITA:RU (REG–107047–00), room 5226, Internal Revenue Service, POB 7604, Ben Franklin Station, Washington, DC 20044.

"Gap" Hedges

The status of so-called gap hedges was not separately addressed in the proposed regulations and is not covered in the final regulations. Insurance companies, for example, sometimes hedge the gap between their liabilities and the assets that fund them. Under the final regulations, a hedge of those assets would not qualify as a hedging transaction if the assets are capital assets. Whether a gap hedge qualifies as a liability hedge is a question of fact and depends on whether it is more closely associated with the liabilities than with the assets.

Identification Requirement

A rule has been added specifying additional information that must be provided for a transaction that counteracts a hedging transaction.

Dates of Applicability

The regulations generally apply to all transactions entered into on or after March 20, 2002. However, the IRS will not challenge any transaction entered into on or after December 17, 1999, and before March 20, 2002, that satisfies the provisions of either § 1.1221–2 of REG–107047–00, published in the **Federal Register** (66 FR 4738) on January 18, 2001, or the provisions of this final regulation.

Special Analyses

It has been determined that this Treasury decision is not a significant regulatory action as defined in Executive Order 12866. Therefore, a regulatory assessment is not required. It is hereby certified that the collection of information in these regulations will not have a significant economic impact on a substantial number of small entities. This certification is based upon the fact that very few small businesses enter into hedging transactions due to their cost and complexity. Further, those small businesses that hedge enter into very few hedging transactions because hedging transactions are costly, complex, and require constant monitoring and a sophisticated understanding of the capital markets. Therefore, a Regulatory Flexibility Analysis under the Regulatory Flexibility Act (5 U.S.C. chapter 6) is not required. Pursuant to section 7805(f) of the Code, the notice of proposed rulemaking preceding these regulations was submitted to the Chief Counsel for Advocacy of the Small Business Administration for comment on its impact on small business.

Drafting Information

The principal author of these regulations is Elizabeth Handler, Office of the Associate Chief Counsel (Financial Institutions and Products). However, other personnel from the IRS and Treasury Department participated in their development.

List of Subjects

26 CFR Part 1

Income taxes, Reporting and recordkeeping requirements.

26 CFR Part 602

Reporting and recordkeeping requirements.

Adoption of Amendments to the Regulations

Accordingly, 26 CFR parts 1 and 602 are amended as follows:

PART 1—INCOME TAXES

Paragraph 1. The authority citation for part 1 is amended by revising the entry for § 1.1221–2 to read as follows:

Authority: 26 U.S.C. 7805 * * *

Section 1.1221–2 also issued under 26 U.S.C. 1221(b)(2)(A)(iii), (b)(2)(B), and (b)(3); 1502 and 6001. * * *

Par. 2. In the list below, for each location indicated in the left column,

remove the language in the middle column from that section, and add the language in the right column.

Affected section	Remove	Add
1.446–4(d)(2), first sentence	1.1221–2(e)	1.1221–2(f).
1.446–4(d)(2), last sentence	1.1221–2(e)(2)	1.1221–2(f)(2).
1.446–4(d)(3), first sentence	1.1221–2(e)	1.1221–2(f).
1.446–4(d)(3), first sentence	1.1221–2(a)(4)(i)	1.1221–2(a)(4).
1.446–4(e)(7), first sentence	1.1221–2(c)(2)	1.1221–2(d)(4).
1.446–4(e)(9)(ii), first sentence	1.1221–2(d)(2)	1.1221–2(e)(2).
1.446–4(e)(9)(ii), last sentence	1.1221–2(d)(2)(ii)	1.1221–2(e)(2)(ii).
1.475(b)–1(d)(2)	1.1221–2(e)	1.1221–2(f).
1.954–2(a)(4)(ii)(A), first sentence	1.1221–2(a) through (c).	1.1221–2(a) through (d).
1.954–2(a)(4)(ii)(B), first sentence	1.1221–2(e)	1.1221–2(f).
1.954–2(g)(2)(ii)(B)(*2*), last sentence	1.1221–2(c)(7)	1.1221–2(c)(3).
1.954–2(g)(3)(i)(B), last sentence	1.1221–2(c)(7)	1.1221–2(c)(3).
1.1256(e)–1(b), first and last sentences	1.1221–2(e)(1)	1.1221–2(f)(1).
1.1256(e)–1(c), first sentence	1.1221–2(e)(1)	1.1221–2(f)(1).
1.1256(e)–1(c), last sentence	paragraph (f)(1)(ii) of § 1.1221–2.	1.1221–2(g)(1)(ii).

Par. 3. Section 1.1221–2 is revised to read as follows:

§ 1.1221–2 Hedging transactions.

(a) *Treatment of hedging transactions*—(1) *In general.* This section governs the treatment of hedging transactions under section 1221(a)(7). Except as provided in paragraph (g)(2) of this section, the term capital asset does not include property that is part of a hedging transaction (as defined in paragraph (b) of this section).

(2) *Short sales and options.* This section also governs the character of gain or loss from a short sale or option that is part of a hedging transaction. Except as provided in paragraph (g)(2) of this section, gain or loss on a short sale or option that is part of a hedging transaction (as defined in paragraph (b) of this section) is ordinary income or loss.

(3) *Exclusivity.* If a transaction is not a hedging transaction as defined in paragraph (b) of this section, gain or loss from the transaction is not made ordinary on the grounds that property involved in the transaction is a surrogate for a noncapital asset, that the transaction serves as insurance against a business risk, that the transaction serves a hedging function, or that the transaction serves a similar function or purpose.

(4) *Coordination with section 988.* This section does not apply to determine the character of gain or loss realized on a section 988 transaction as defined in section 988(c)(1) or realized with respect to any qualified fund as defined in section 988(c)(1)(E)(iii).

(b) *Hedging transaction defined.* Section 1221(b)(2)(A) provides that a hedging transaction is any transaction that a taxpayer enters into in the normal course of the taxpayer's trade or business primarily—

(1) To manage risk of price changes or currency fluctuations with respect to ordinary property (as defined in paragraph (c)(2) of this section) that is held or to be held by the taxpayer;

(2) To manage risk of interest rate or price changes or currency fluctuations with respect to borrowings made or to be made, or ordinary obligations incurred or to be incurred, by the taxpayer; or

(3) To manage such other risks as the Secretary may prescribe in regulations (see paragraph (d)(6) of this section).

(c) *General rules*—(1) *Normal course.* Solely for purposes of paragraph (b) of this section, if a transaction is entered into in furtherance of a taxpayer's trade or business, the transaction is entered into in the normal course of the taxpayer's trade or business. This rule includes managing risks relating to the expansion of an existing business or the acquisition of a new trade or business.

(2) *Ordinary property and obligations.* Property is ordinary property to a taxpayer only if a sale or exchange of the property by the taxpayer could not produce capital gain or loss under any circumstances. Thus, for example, property used in a trade or business within the meaning of section 1231(b) (determined without regard to the holding period specified in that section) is not ordinary property. An obligation is an ordinary obligation if performance or termination of the obligation by the taxpayer could not produce capital gain or loss. For purposes of this paragraph (c)(2), the term termination has the same meaning as it does in section 1234A.

(3) *Hedging an aggregate risk.* The term hedging transaction includes a transaction that manages an aggregate risk of interest rate changes, price changes, and/or currency fluctuations only if all of the risk, or all but a de minimis amount of the risk, is with respect to ordinary property, ordinary obligations, or borrowings.

(4) *Managing risk*—(i) *In general.* Whether a transaction manages a taxpayer's risk is determined based on all of the facts and circumstances surrounding the taxpayer's business and the transaction. Whether a transaction manages a taxpayer's risk may be determined on a business unit by business unit basis (for example by treating particular groups of activities, including the assets and liabilities attributable to those activities, as separate business units), provided that the business unit is within a single entity or consolidated return group that adopts the single-entity approach. A taxpayer's hedging strategies and policies as reflected in the taxpayer's minutes or other records are evidence of whether particular transactions were entered into primarily to manage the taxpayer's risk.

(ii) *Limitation of risk management transactions to those specifically described.* Except as otherwise determined by published guidance or by private letter ruling, a transaction that is not treated as a hedging transaction under paragraph (d) does not manage risk. Moreover, a transaction undertaken for speculative purposes will not be treated as a hedging transaction.

(d) *Transactions that manage risk*—(1) *Risk reduction transactions*—(i) *In general.* A transaction that is entered into to reduce a taxpayer's risk, manages a taxpayer's risk.

(ii) *Micro and macro hedges*—(A) *In general.* A taxpayer generally has risk of a particular type only if it is at risk

when all of its operations are considered. Nonetheless, a hedge of a particular asset or liability generally will be respected as reducing risk if it reduces the risk attributable to the asset or liability and if it is reasonably expected to reduce the overall risk of the taxpayer's operations. If a taxpayer hedges particular assets or liabilities, or groups of assets or liabilities, and the hedges are undertaken as part of a program that, as a whole, is reasonably expected to reduce the overall risk of the taxpayer's operations, the taxpayer generally does not have to demonstrate that each hedge that was entered into pursuant to the program reduces its overall risk.

(B) *Example.* The following example illustrates the rules stated in paragraph (d)(1)(ii)(A) of this section:

Example. Corporation X manages its business operations by treating particular groups of activities, including the assets and liabilities attributable to those assets, as separate business units. A separate set of books and records is maintained with respect to the activities, assets and liabilities of separate business unit *y*. As part of a risk management program that Corporation X reasonably expects to reduce the overall risks of its business operations, Corporation X enters into hedges to reduce the risks of separate business unit *y*. Corporation X may demonstrate that the hedges reduce risk by taking into account only the activities, assets and liabilities of business unit *y*.

(iii) *Written options.* A written option may reduce risk. For example, in appropriate circumstances, a written call option with respect to assets held by a taxpayer or a written put option with respect to assets to be acquired by a taxpayer may be a hedging transaction. See also paragraph (d)(3) of this section.

(iv) *Fixed-to-floating price hedges.* Under the principles of paragraph (d)(1)(ii)(A) of this section, a transaction that economically converts a price from a fixed price to a floating price may reduce risk. For example, a taxpayer with a fixed cost for its inventory may be at risk if the price at which the inventory can be sold varies with a particular factor. Thus, for such a taxpayer a transaction that converts its fixed price to a floating price may be a hedging transaction.

(2) *Interest rate conversions.* A transaction that economically converts an interest rate from a fixed rate to a floating rate or that converts an interest rate from a floating rate to a fixed rate manages risk.

(3) *Transactions that counteract hedging transactions.* If a transaction is entered into primarily to offset all or any part of the risk management effected by one or more hedging transactions, the transaction is a hedging transaction. For example, if a written option is used to reduce or eliminate the risk reduction obtained from another position such as a purchased option, then it may be a hedging transaction.

(4) *Recycling.* A taxpayer may enter into a hedging transaction by using a position that was a hedge of one asset or liability as a hedge of another asset or liability (recycling).

(5) *Transactions not entered into primarily to manage risk*—(i) *Rule.* Except as otherwise determined in published guidance or private letter ruling, the purchase or sale of a debt instrument, an equity security, or an annuity contract is not a hedging transaction even if the transaction limits or reduces the taxpayer's risk with respect to ordinary property, borrowings, or ordinary obligations. In addition, the Commissioner may determine in published guidance that other transactions are not hedging transactions.

(ii) *Examples.* The following examples illustrate the rule stated in paragraph (d)(5)(i) of this section:

Example 1. Taxpayer borrows money and agrees to pay a floating rate of interest. Taxpayer purchases debt instruments that bear a comparable floating rate. Although taxpayer's interest rate risk from the floating rate borrowing may be reduced by the purchase of the debt instruments, the acquisition of the debt instruments is not a hedging transaction, because the transaction is not entered into primarily to manage the taxpayer's risk.

Example 2. Taxpayer undertakes obligations to pay compensation in the future. The amount of the future compensation payments is adjusted as if amounts were invested in a specified mutual fund and were increased or decreased by the earnings, gains and losses that would result from such an investment. Taxpayer invests funds in the shares of the mutual fund. Although the investment in shares of the mutual fund reduces the taxpayer's risk of fluctuation in the amount of its obligation to employees, the investment was not made primarily to manage the taxpayer's risk. Accordingly, the transaction is not a hedging transaction.

Example 3. Taxpayer provides a nonqualified retirement plan for employees that is structured like a defined contribution plan. Based on a schedule that takes into account an employee's monthly salary and years of service with the taxpayer, the taxpayer makes monthly credits to an account for each employee. Each employee may designate that the account will be treated as if it were used to pay premiums on a variable annuity contract issued by the M insurance company with a value that reflects a specified investment option. M offers a number of investment options for its variable annuity contracts. Taxpayer invests funds in M company variable annuity contracts that parallel the investment options selected by the employees. The investment is not made primarily to manage the taxpayer's risk and is not a hedging transaction.

(6) *Hedges of other risks.* The Commissioner may, by published guidance, determine that hedging transactions include transactions entered into to manage risks other than interest rate or price changes, or currency fluctuations.

(7) *Miscellaneous provision*—(i) *Extent of risk management.* A taxpayer may hedge all or any portion of its risk for all or any part of the period during which it is exposed to the risk.

(ii) *Number of transactions.* The fact that a taxpayer frequently enters into and terminates positions (even if done on a daily or more frequent basis) is not relevant to whether these transactions are hedging transactions. Thus, for example, a taxpayer hedging the risk associated with an asset or liability may frequently establish and terminate positions that hedge that risk, depending on the extent the taxpayer wishes to be hedged. Similarly, if a taxpayer maintains its level of risk exposure by entering into and terminating a large number of transactions in a single day, its transactions may nonetheless qualify as hedging transactions.

(e) *Hedging by members of a consolidated group*—(1) *General rule: single-entity approach.* For purposes of this section, the risk of one member of a consolidated group is treated as the risk of the other members as if all of the members of the group were divisions of a single corporation. For example, if any member of a consolidated group hedges the risk of another member of the group by entering into a transaction with a third party, that transaction may potentially qualify as a hedging transaction. Conversely, intercompany transactions are not hedging transactions because, when considered as transactions between divisions of a single corporation, they do not manage the risk of that single corporation.

(2) *Separate-entity election.* In lieu of the single-entity approach specified in paragraph (e)(1) of this section, a consolidated group may elect separate-entity treatment of its hedging transactions. If a group makes this separate-entity election, the following rules apply:

(i) *Risk of one member not risk of other members.* Notwithstanding paragraph (e)(1) of this section, the risk of one member is not treated as the risk of other members.

(ii) *Intercompany transactions.* An intercompany transaction is a hedging transaction (an intercompany hedging transaction) with respect to a member of

a consolidated group if and only if it meets the following requirements—

(A) The position of the member in the intercompany transaction would qualify as a hedging transaction with respect to the member (taking into account paragraph (e)(2)(i) of this section) if the member had entered into the transaction with an unrelated party; and

(B) The position of the other member (the marking member) in the transaction is marked to market under the marking member's method of accounting.

(iii) *Treatment of intercompany hedging transactions.* An intercompany hedging transaction (that is, a transaction that meets the requirements of paragraphs (e)(2)(ii)(A) and (B) of this section) is subject to the following rules—

(A) The character and timing rules of § 1.1502–13 do not apply to the income, deduction, gain, or loss from the intercompany hedging transaction; and

(B) Except as provided in paragraph (g)(3) of this section, the character of the marking member's gain or loss from the transaction is ordinary.

(iv) *Making and revoking the election.* Unless the Commissioner otherwise prescribes, the election described in this paragraph (e)(2) must be made in a separate statement saying ''[Insert Name and Employer Identification Number of Common Parent] HEREBY ELECTS THE APPLICATION OF SECTION 1.1221–2(e)(2) (THE SEPARATE-ENTITY APPROACH).'' The statement must also indicate the date as of which the election is to be effective. The election must be signed by the common parent and filed with the group's Federal income tax return for the taxable year that includes the first date for which the election is to apply. The election applies to all transactions entered into on or after the date so indicated. The election may be revoked only with the consent of the Commissioner.

(3) *Definitions.* For definitions of consolidated group, divisions of a single corporation, group, intercompany transactions, and member, see section 1502 and the regulations thereunder.

(4) *Examples. General Facts.* In these examples, *O* and *H* are members of the same consolidated group. *O*'s business operations give rise to interest rate risk ''*A*,'' which *O* wishes to hedge. *O* enters into an intercompany transaction with *H* that transfers the risk to *H*. *O*'s position in the intercompany transaction is ''*B*,'' and *H*'s position in the transaction is ''*C*.'' *H* enters into position ''*D*'' with a third party to reduce the interest rate risk it has with respect to its position *C*. *D* would be a hedging transaction with respect to risk *A* if *O*'s risk *A* were *H*'s risk. The following examples illustrate this paragraph (e):

Example 1. Single-entity treatment—(i) General rule. Under paragraph (e)(1) of this section, *O*'s risk *A* is treated as *H*'s risk, and therefore *D* is a hedging transaction with respect to risk *A*. Thus, the character of *D* is determined under the rules of this section, and the income, deduction, gain, or loss from *D* must be accounted for under a method of accounting that satisfies § 1.446–4. The intercompany transaction *B–C* is not a hedging transaction and is taken into account under § 1.1502–13.

(ii) *Identification. D* must be identified as a hedging transaction under paragraph (f)(1) of this section, and *A* must be identified as the hedged item under paragraph (f)(2) of this section. Under paragraph (f)(5) of this section, the identification of *A* as the hedged item can be accomplished by identifying the positions in the intercompany transaction as hedges or hedged items, as appropriate. Thus, substantially contemporaneous with entering into *D*, *H* may identify *C* as the hedged item and *O* may identify *B* as a hedge and *A* as the hedged item.

Example 2. Separate-entity election; counterparty that does not mark to market. In addition to the *General Facts* stated above, assume that the group makes a separate-entity election under paragraph (e)(2) of this section. If *H* does not mark *C* to market under its method of accounting, then *B* is not a hedging transaction, and the *B–C* intercompany transaction is taken into account under the rules of section 1502. *D* is not a hedging transaction with respect to *A*, but *D* may be a hedging transaction with respect to *C* if *C* is ordinary property or an ordinary obligation and if the other requirements of paragraph (b) of this section are met. If *D* is not part of a hedging transaction, then *D* may be part of a straddle for purposes of section 1092.

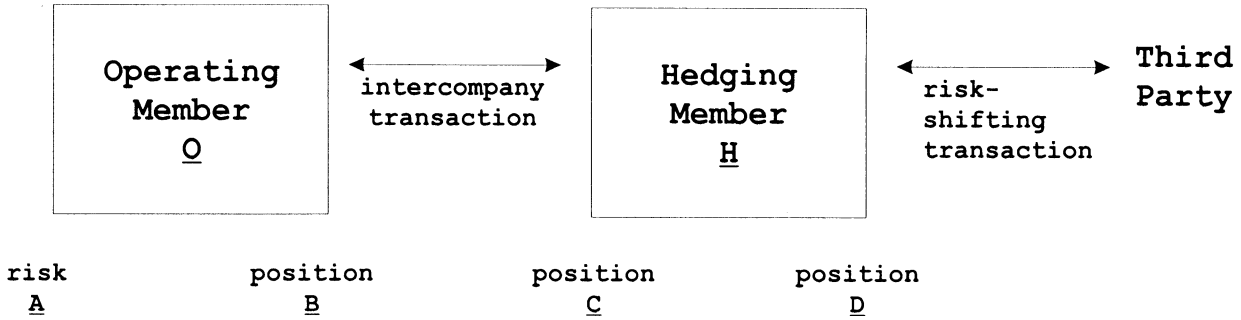

Example 3. Separate-entity election; counterparty that marks to market. The facts are the same as in *Example 2* above, except that *H* marks *C* to market under its method of accounting. Also assume that *B* would be a hedging transaction with respect to risk *A* if *O* had entered into that transaction with an unrelated party. Thus, for *O*, the *B–C* transaction is an intercompany hedging transaction with respect to *O*'s risk *A*, the character and timing rules of § 1.1502–13 do not apply to the *B–C* transaction, and *H*'s income, deduction, gain, or loss from *C* is ordinary. However, other attributes of the items from the *B–C* transaction are determined under § 1.1502–13. *D* is a hedging transaction with respect to *C* if it meets the requirements of paragraph (b) of this section.

(f) *Identification and recordkeeping*—(1) *Same-day identification of hedging transactions.* Under section 1221(a)(7), a taxpayer that enters into a hedging transaction (including recycling an existing hedging transaction) must clearly identify it as a hedging transaction before the close of the day on which the taxpayer acquired, originated, or entered into the transaction (or recycled the existing hedging transaction).

(2) *Substantially contemporaneous identification of hedged item*—(i) *Content of the identification.* A taxpayer that enters into a hedging transaction must identify the item, items, or aggregate risk being hedged. Identification of an item being hedged generally involves identifying a transaction that creates risk, and the type of risk that the transaction creates. For example, if a taxpayer is hedging the price risk with respect to its June purchases of corn inventory, the transaction being hedged is the June purchase of corn and the risk is price movements in the market where the taxpayer buys its corn. For additional rules concerning the content of this identification, see paragraph (f)(3) of this section.

(ii) *Timing of the identification.* The identification required by this paragraph

(f)(2) must be made substantially contemporaneously with entering into the hedging transaction. An identification is not substantially contemporaneous if it is made more than 35 days after entering into the hedging transaction.

(3) *Identification requirements for certain hedging transactions.* In the case of the hedging transactions described in this paragraph (f)(3), the identification under paragraph (f)(2) of this section must include the information specified.

(i) *Anticipatory asset hedges.* If the hedging transaction relates to the anticipated acquisition of assets by the taxpayer, the identification must include the expected date or dates of acquisition and the amounts expected to be acquired.

(ii) *Inventory hedges.* If the hedging transaction relates to the purchase or sale of inventory by the taxpayer, the identification is made by specifying the type or class of inventory to which the transaction relates. If the hedging transaction relates to specific purchases or sales, the identification must also include the expected dates of the purchases or sales and the amounts to be purchased or sold.

(iii) *Hedges of debt of the taxpayer*—(A) *Existing debt.* If the hedging transaction relates to accruals or payments under an issue of existing debt of the taxpayer, the identification must specify the issue and, if the hedge is for less than the full issue price or the full term of the debt, the amount of the issue price and the term covered by the hedge.

(B) *Debt to be issued.* If the hedging transaction relates to the expected issuance of debt by the taxpayer or to accruals or payments under debt that is expected to be issued by the taxpayer, the identification must specify the following information: the expected date of issuance of the debt; the expected maturity or maturities; the total expected issue price; and the expected interest provisions. If the hedge is for less than the entire expected issue price of the debt or the full expected term of the debt, the identification must also include the amount or the term being hedged. The identification may indicate a range of dates, terms, and amounts, rather than specific dates, terms, or amounts. For example, a taxpayer might identify a transaction as hedging the yield on an anticipated issuance of fixed rate debt during the second half of its fiscal year, with the anticipated amount of the debt between $75 million and $125 million, and an anticipated term of approximately 20 to 30 years.

(iv) *Hedges of aggregate risk*—(A) *Required identification.* If a transaction hedges aggregate risk as described in paragraph (c)(3) of this section, the identification under paragraph (f)(2) of this section must include a description of the risk being hedged and of the hedging program under which the hedging transaction was entered. This requirement may be met by placing in the taxpayer's records a description of the hedging program and by establishing a system under which individual transactions can be identified as being entered into pursuant to the program.

(B) *Description of hedging program.* A description of a hedging program must include an identification of the type of risk being hedged, a description of the type of items giving rise to the risk being aggregated, and sufficient additional information to demonstrate that the program is designed to reduce aggregate risk of the type identified. If the program contains controls on speculation (for example, position limits), the description of the hedging program must also explain how the controls are established, communicated, and implemented.

(v) *Transactions that counteract hedging transactions.* If the hedging transaction is described in paragraph (d)(3) of this section, the description of the hedging transaction must include an identification of the risk management transaction that is being offset and the original underlying hedged item.

(4) *Manner of identification and records to be retained*—(i) *Inclusion of identification in tax records.* The identification required by this paragraph (f) must be made on, and retained as part of, the taxpayer's books and records.

(ii) *Presence of identification must be unambiguous.* The presence of an identification for purposes of this paragraph (f) must be unambiguous. The identification of a hedging transaction for financial accounting or regulatory purposes does not satisfy this requirement unless the taxpayer's books and records indicate that the identification is also being made for tax purposes. The taxpayer may indicate that individual hedging transactions, or a class or classes of hedging transactions, that are identified for financial accounting or regulatory purposes are also being identified as hedging transactions for purposes of this section.

(iii) *Manner of identification.* The taxpayer may separately and explicitly make each identification, or, so long as paragraph (f)(4)(ii) of this section is satisfied, the taxpayer may establish a system pursuant to which the identification is indicated by the type of transaction or by the manner in which the transaction is consummated or recorded. An identification under this system is made at the later of the time that the system is established or the time that the transaction satisfies the terms of the system by being entered, or by being consummated or recorded, in the designated fashion.

(iv) *Principles of paragraph (f)(4)(iii) of this section illustrated.* Paragraphs (f)(4)(iv)(A) through (C) of this section illustrate the principles of paragraph (f)(4)(iii) of this section and assume that the other requirements of this paragraph (f) are satisfied.

(A) A taxpayer can make an identification by designating a hedging transaction for (or placing it in) an account that has been identified as containing only hedges of a specified item (or of specified items or specified aggregate risk).

(B) A taxpayer can make an identification by including and retaining in its books and records a statement that designates all future transactions in a specified derivative product as hedges of a specified item, items, or aggregate risk.

(C) A taxpayer can make an identification by designating a certain mark, a certain form, or a certain legend as meaning that a transaction is a hedge of a specified item (or of specified items or a specified aggregate risk). Identification can be made by placing the designated mark on a record of the transaction (for example, trading ticket, purchase order, or trade confirmation) or by using the designated form or a record that contains the designated legend.

(5) *Identification of hedges involving members of the same consolidated group*—(i) *General rule: single-entity approach.* A member of a consolidated group must satisfy the requirements of this paragraph (f) as if all of the members of the group were divisions of a single corporation. Thus, the member entering into the hedging transaction with a third party must identify the hedging transaction under paragraph (f)(1) of this section. Under paragraph (f)(2) of this section, that member must also identify the item, items, or aggregate risk that is being hedged, even if the item, items, or aggregate risk relates primarily or entirely to other members of the group. If the members of a group use intercompany transactions to transfer risk within the group, the requirements of paragraph (f)(2) of this section may be met by identifying the intercompany transactions, and the risks hedged by the intercompany transactions, as

hedges or hedged items, as appropriate. Because identification of the intercompany transaction as a hedge serves solely to identify the hedged item, the identification is timely if made within the period required by paragraph (f)(2) of this section. For example, if a member transfers risk in an intercompany transaction, it may identify under the rules of this paragraph (f) both its position in that transaction and the item, items, or aggregate risk being hedged. The member that hedges the risk outside the group may identify under the rules of this paragraph (f) both its position with the third party and its position in the intercompany transaction. Paragraph (e)(4) *Example 1* of this section illustrates this identification.

(ii) *Rule for consolidated groups making the separate-entity election.* If a consolidated group makes the separate-entity election under paragraph (e)(2) of this section, each member of the group must satisfy the requirements of this paragraph (f) as though it were not a member of a consolidated group.

(6) *Consistency with section 1256(e)(2).* Any identification for purposes of section 1256(e)(2) is also an identification for purposes of paragraph (f)(1) of this section.

(g) *Effect of identification and non-identification*—(1) *Transactions identified*—(i) *In general.* If a taxpayer identifies a transaction as a hedging transaction for purposes of paragraph (f)(1) of this section, the identification is binding with respect to gain, whether or not all of the requirements of paragraph (f) of this section are satisfied. Thus, gain from that transaction is ordinary income. If the transaction is not in fact a hedging transaction described in paragraph (b) of this section, however, paragraphs (a)(1) and (2) of this section do not apply and the character of loss is determined without reference to whether the transaction is a surrogate for a noncapital asset, serves as insurance against a business risk, serves a hedging function, or serves a similar function or purpose. Thus, the taxpayer's identification of the transaction as a hedging transaction does not itself make loss from the transaction ordinary.

(ii) *Inadvertent identification.* Notwithstanding paragraph (g)(1)(i) of this section, if the taxpayer identifies a transaction as a hedging transaction for purposes of paragraph (f) of this section, the character of the gain is determined as if the transaction had not been identified as a hedging transaction if—

(A) The transaction is not a hedging transaction (as defined in paragraph (b) of this section);

(B) The identification of the transaction as a hedging transaction was due to inadvertent error; and

(C) All of the taxpayer's transactions in all open years are being treated on either original or, if necessary, amended returns in a manner consistent with the principles of this section.

(2) *Transactions not identified*—(i) *In general.* Except as provided in paragraphs (g)(2)(ii) and (iii) of this section, the absence of an identification that satisfies the requirements of paragraph (f)(1) of this section is binding and establishes that a transaction is not a hedging transaction. Thus, subject to the exceptions, the rules of paragraphs (a)(1) and (2) of this section do not apply, and the character of gain or loss is determined without reference to whether the transaction is a surrogate for a noncapital asset, serves as insurance against a business risk, serves a hedging function, or serves a similar function or purpose.

(ii) *Inadvertent error.* If a taxpayer does not make an identification that satisfies the requirements of paragraph (f) of this section, the taxpayer may treat gain or loss from the transaction as ordinary income or loss under paragraph (a)(1) or (2) of this section if—

(A) The transaction is a hedging transaction (as defined in paragraph (b) of this section);

(B) The failure to identify the transaction was due to inadvertent error; and

(C) All of the taxpayer's hedging transactions in all open years are being treated on either original or, if necessary, amended returns as provided in paragraphs (a)(1) and (2) of this section.

(iii) *Anti-abuse rule.* If a taxpayer does not make an identification that satisfies all the requirements of paragraph (f) of this section but the taxpayer has no reasonable grounds for treating the transaction as other than a hedging transaction, then gain from the transaction is ordinary. The reasonableness of the taxpayer's failure to identify a transaction is determined by taking into consideration not only the requirements of paragraph (b) of this section but also the taxpayer's treatment of the transaction for financial accounting or other purposes and the taxpayer's identification of similar transactions as hedging transactions.

(3) *Transactions by members of a consolidated group*—(i) *Single-entity approach.* If a consolidated group is under the general rule of paragraph (e)(1) of this section (the single-entity approach), the rules of this paragraph (g) apply only to transactions that are not intercompany transactions.

(ii) *Separate-entity election.* If a consolidated group has made the election under paragraph (e)(2) of this section, then, in addition to the rules of paragraphs (g)(1) and (2) of this section, the following rules apply:

(A) If an intercompany transaction is identified as a hedging transaction but does not meet the requirements of paragraphs (e)(2)(ii)(A) and (B) of this section, then, notwithstanding any contrary provision in § 1.1502–13, each party to the transaction is subject to the rules of paragraph (g)(1) of this section with respect to the transaction as though it had incorrectly identified its position in the transaction as a hedging transaction.

(B) If a transaction meets the requirements of paragraphs (e)(2)(ii) (A) and (B) of this section but the transaction is not identified as a hedging transaction, each party to the transaction is subject to the rules of paragraph (g)(2) of this section. (Because the transaction is an intercompany hedging transaction, the character and timing rules of § 1.1502–13 do not apply. See paragraph (e)(2)(iii)(A) of this section.)

(h) *Effective date.* The rules of this section apply to transactions entered into on or after March 20, 2002.

Par. 4. Section 1.1256(e)–1 is revised to read as follows:

§ 1.1256(e)–1 Identification of hedging transactions.

(a) *Identification and recordkeeping requirements.* Under section 1256(e)(2), a taxpayer that enters into a hedging transaction must identify the transaction as a hedging transaction before the close of the day on which the taxpayer enters into the transaction.

(b) *Requirements for identification.* The identification of a hedging transaction for purposes of section 1256(e)(2) must satisfy the requirements of § 1.1221–2(f)(1). Solely for purposes of section 1256(f)(1), however, an identification that does not satisfy all of the requirements of § 1.1221–2(f)(1) is nevertheless treated as an identification under section 1256(e)(2).

(c) *Consistency with § 1.1221–2.* Any identification for purposes of § 1.1221–2(f)(1) is also an identification for purposes of this section. If a taxpayer satisfies the requirements of § 1.1221–2(f)(1)(ii), the transaction is treated as if it were not identified as a hedging transaction for purposes of section 1256(e)(2).

(d) *Effective date.* The rules of this section apply to transactions entered into on or after March 20, 2002.

PART 602—OMB CONTROL NUMBERS UNDER THE PAPERWORK REDUCTION ACT

Par. 5. The authority citation for part 602 continues to read as follows:

Authority: 26 U.S.C. 7805.

Par. 6. In § 602.101, paragraph (b) is amended by removing the entries for ''1.1221–2,'' ''1.1221–2(d)(2)(iv),'' ''1.1221–2(e)(5),'' ''1.1221–2(g)(5)(ii),'' ''1.1221–2(g)(6)(ii),'' ''1.1221–2(g)(6)(iii),'' and ''1.1221–2T(c)'' and adding an entry in numerical order to the table to read as follows:

§ 602.101 OMB Control numbers.

* * * * *

(b) * * *

CFR part or section where identified and described	Current OMB control No.
* * * * *	
1.1221–2	1545–1480
* * * * *	

Robert E. Wenzel,

Deputy Commissioner of Internal Revenue.

Approved: March 14, 2002.

Mark Weinberger,

Assistant Secretary of the Treasury.

[FR Doc. 02–6622 Filed 3–15–02; 8:54 am]

BILLING CODE 4830–01–P

DEPARTMENT OF TRANSPORTATION

Coast Guard

33 CFR Part 100

[CGD05–02–003]

RIN 2115–AE46

Special Local Regulations for Marine Events; St. Mary's River, St. Mary's City, MD

AGENCY: Coast Guard, DOT.

ACTION: Temporary final rule.

SUMMARY: The Coast Guard is adopting temporary special local regulations during the St. Mary's Seahawk Sprint, a marine event to be held on the waters of the St. Mary's River, St. Mary's City, Maryland. This action is necessary to provide for the safety of life on navigable waters during the event. This action is intended to restrict vessel traffic in portions of the St. Mary's River during the event.

DATES: This rule is effective from 7 a.m. to 4 p.m. eastern time on April 13, 2002.

ADDRESSES: Documents indicated in this preamble as being available in the docket, are part of docket CGD05–02–003 and are available for inspection or copying at Commander (Aoax), Fifth Coast Guard District, 431 Crawford Street, Portsmouth, Virginia 23704–5004, between 9 a.m. and 2 p.m., Monday through Friday, except Federal holidays.

FOR FURTHER INFORMATION CONTACT: S. L. Phillips, Project Manager, Auxiliary and Recreational Boating Safety Section, at (757) 398–6204.

SUPPLEMENTARY INFORMATION:

Regulatory Information

We did not publish a notice of proposed rulemaking (NPRM) for this regulation. In keeping with 5 U.S.C. 553(b)(B) and 553(d)(3), the Coast Guard finds that good cause exists for not publishing a NPRM and for making this rule effective less than 30 days after publication in the **Federal Register**. The event will occur on April 13, 2002, and numerous spectator craft are anticipated. Because of the danger posed to spectators and participants by other vessels transiting through the event area, it is in the public interest to have these regulations in effect during the event. In addition, advance notifications will be made via the Local Notice to Mariners, marine information broadcasts, and area newspapers.

Background and Purpose

St. Mary's College of Maryland will sponsor the St. Mary's Seahawk Sprint on April 13, 2002. The St. Mary's Seahawk Sprint consists of intercollegiate crew rowing teams racing along a 2000-meter course on the waters of the St. Mary's River. A fleet of spectator vessels is expected to gather near the event site to view the competition. To provide for the safety of event participants, spectators and transiting vessels, the Coast Guard will temporarily restrict vessel movement in the event area during the crew races.

Discussion of Rule

The Coast Guard is establishing temporary special local regulations on specified waters of the St. Mary's River. The temporary special local regulations will be in effect from 7 a.m. to 4 p.m. eastern time on April 13, 2002. The effect will be to restrict general navigation in the regulated area during the event. Except for persons or vessels authorized by the Coast Guard Patrol Commander, no person or vessel will be allowed to enter or remain in the regulated area. The Patrol Commander will allow non-participating vessels to transit the regulated area between races, when it is safe to do so. These regulations are needed to control vessel traffic during the event to enhance the safety of participants, spectators and transiting vessels.

Regulatory Evaluation

This rule is not a ''significant regulatory action'' under section 3(f) of Executive Order 12866 and does not require an assessment of potential costs and benefits under section 6(a)(3) of that Order. The Office of Management and Budget has not reviewed it under that Order. It is not significant under the regulatory policies and procedures of the Department of Transportation (DOT) (44 FR 11040; February 26, 1979).

Although this regulation prevents traffic from transiting a portion of the St. Mary's River during the event, the effect of this regulation will not be significant due to the limited duration that the regulated area will be in effect and the extensive advance notifications that will be made to the maritime community via the Local Notice to Mariners, marine information broadcasts, and area newspapers, so mariners can adjust their plans accordingly. Additionally, the regulated area has been narrowly tailored to impose the least impact on general navigation yet provide the level of safety deemed necessary.

Small Entities

Under the Regulatory Flexibility Act (5 U.S.C. 601—612), we considered whether this rule would have a significant economic impact on a substantial number of small entities. The term ''small entities'' comprises small businesses, not-for-profit organizations that are independently owned and operated and are not dominant in their fields, and governmental jurisdictions with populations of less than 50,000.

The Coast Guard certifies under 5 U.S.C. 605(b) that this rule will not have a significant economic impact on a substantial number of small entities.

This rule will affect the following entities, some of which may be small entities: the owners or operators of vessels intending to transit this section of St. Mary's River during the event.

Although this regulation prevents traffic from transiting a portion of the St. Mary's River during the event, the effect of this regulation will not be significant because of the limited duration that the regulated area will be in effect and the extensive advance notifications that will be made to the maritime community via the Local Notice to Mariners, marine information broadcasts, and area newspapers, so mariners can adjust their plans accordingly.

Assistance for Small Entities

Under section 213(a) of the Small Business Regulatory Enforcement Fairness Act of 1996 (Public Law 104–121), we want to assist small entities in understanding this rule so that they can better evaluate its effects on them and participate in the rulemaking process.

Small businesses may send comments on the actions of Federal employees who enforce, or otherwise determine compliance with, Federal regulations to the Small Business and Agriculture Regulatory Enforcement Ombudsman and the Regional Small Business Regulatory Fairness Boards. The Ombudsman evaluates these actions annually and rates each agency's responsiveness to small business. If you wish to comment on actions by employees of the Coast Guard, call 1–888–REG–FAIR (1–888–734–3247).

Collection of Information

This rule would call for no new collection of information under the Paperwork Reduction Act of 1995 (44 U.S.C. 3501–3520).

Federalism

A rule has implications for federalism under Executive Order 13132, Federalism, if it has a substantial direct effect on State law or local governments and would either preempt State law or impose a substantial direct cost of compliance on them. We have analyzed this rule under that Order and have determined that it does not have implications for federalism.

Unfunded Mandates Reform Act

The Unfunded Mandates Reform Act of 1995 (2 U.S.C. 1531–1538) requires Federal agencies to assess the effects of their discretionary regulatory actions. In particular, the Act addresses actions that may result in the expenditure by a State, local, or tribal government, in the aggregate, or by the private sector of $100,000,000 or more in any one year. Though this rule will not result in such expenditure, we do discuss the effects of this rule elsewhere in this preamble.

Taking of Private Property

This rule will not effect a taking of private property or otherwise have taking implications under Executive Order 12630, Governmental Actions and Interference with Constitutionally Protected Property Rights.

Civil Justice Reform

This rule meets applicable standards in sections 3(a) and 3(b)(2) of Executive Order 12988, Civil Justice Reform, to minimize litigation, eliminate ambiguity, and reduce burden.

Protection of Children

We have analyzed this rule under Executive Order 13045, Protection of Children from Environmental Health Risks and Safety Risks. This rule is not an economically significant rule and does not concern an environmental risk to health or risk to safety that may disproportionately affect children.

Indian Tribal Governments

This rule does not have tribal implications under Executive Order 13175, Consultation and Coordination with Indian Tribal Governments, because it would not have a substantial and direct effect on one or more Indian tribes, on the relationship between the Federal Government and Indian tribes, or on the distribution of power and responsibilities between the Federal Government and Indian tribes.

Energy Effects

We have analyzed this rule under Executive Order 13211, Actions Concerning Regulations That Significantly Affect Energy Supply, Distribution, or Use. We have determined that it is not a ''significant energy action'' under that order because it is not a ''significant regulatory action'' under Executive Order 12866 and is not likely to have a significant adverse effect on the supply, distribution, or use of energy. It has not been designated by the Administrator of the Office of Information and Regulatory Affairs as a significant energy action. Therefore, it does not require a Statement of Energy Effects under Executive Order 13211.

Environment

We considered the environmental impact of this rule and concluded that, under figure 2–1, paragraphs (34)(h) and (35)(a) of Commandant Instruction M16475.1D, this rule is categorically excluded from further environmental documentation. Special local regulations issued in conjunction with a regatta or marine parade permit for an event not located in, proximate to, or above an area designated as environmentally sensitive by an environmental agency of the Federal, state, or local government, are specifically excluded from further analysis and documentation under those sections. A ''Categorical Exclusion Determination'' is available in the docket where indicated under **ADDRESSES.**

List of Subjects in 33 CFR Part 100

Marine safety, Navigation (water), Reporting and recordkeeping requirements, Waterways.

For the reasons discussed in the preamble, the Coast Guard amends 33 CFR Part 100 as follows:

PART 100—SAFETY OF LIFE ON NAVIGABLE WATERS

1. The authority citation for part 100 continues to read as follows:

Authority: 33 U.S.C. 1233 through 1236; 49 CFR 1.46; 33 CFR 100.35.

2. Add a temporary section, § 100.35–T05–003 to read as follows:

§ 100.35–T05–003 St. Mary's River, St. Mary's City, Maryland.

(a) *Definitions:*

(1) *Coast Guard Patrol Commander.* The Coast Guard Patrol Commander is a commissioned, warrant, or petty officer of the Coast Guard who has been designated by the Commander, Coast Guard Activities Baltimore.

(2) *Official Patrol.* The Official Patrol is any vessel assigned or approved by Commander, Coast Guard Activities Baltimore with a commissioned, warrant, or petty officer on board and displaying a Coast Guard ensign.

(3) *Regulated Area.* The regulated area includes all waters of the St. Mary's River, from shoreline to shoreline, bounded to the south by a line at latitude 38°10′05″ North, and bounded to the north by a line at latitude 38°12′00″ North. All coordinates reference Datum NAD 1983.

(b) *Special Local Regulations:*

(1) Except for persons or vessels authorized by the Coast Guard Patrol Commander, no person or vessel may enter or remain in the regulated area.

(2) The operator of any vessel in this area shall:

(i) Stop the vessel immediately when directed to do so by any Official Patrol, including any commissioned, warrant, or petty officer on board a vessel displaying a Coast Guard ensign; and

(ii) Proceed as directed by any Official Patrol, including any commissioned, warrant, or petty officer on board a vessel displaying a Coast Guard ensign.

(c) *Effective Dates.* This section is in effect from 7 a.m. to 4 p.m. eastern time on April 13, 2002.

Dated: March 8, 2002.

Thad W. Allen,

Vice Admiral, U.S. Coast Guard, Commander, Fifth Coast Guard District.

[FR Doc. 02–6646 Filed 3–19–02; 8:45 am]

BILLING CODE 4910–15–U

DEPARTMENT OF TRANSPORTATION

Coast Guard

33 CFR Part 165

[COTP Los Angeles-Long Beach 02–003]

RIN 2115–AA97

Safety Zone; Long Beach, CA

AGENCY: Coast Guard, DOT.

ACTION: Temporary final rule.

SUMMARY: The Coast Guard has established a temporary safety zone in the navigable waters of Long Beach, California, for the National Water Ski Racing Association (NWSRA) Water Ski Race from 8 a.m. to 5 p.m. (PST) on March 23, 2002 and from 8 a.m. to 5 p.m. on March 24, 2002. This safety zone is necessary to provide for the safety of the crew and participants of the race and to protect the participating vessels. Persons and vessels are prohibited from entering into or transiting through this safety zone unless authorized by the Captain of the Port or his or her designated representative.

DATES: This rule is effective from 8 a.m. (PST) on March 23, 2002, to 5 p.m. on March 24, 2002.

ADDRESSES: Documents indicated in this preamble as being available in the docket are part of docket COTP Los Angeles-Long Beach 02–003 and are available for inspection or copying at U.S. Coast Guard Marine Safety Office/Group Los Angeles-Long Beach, 1001 S. Seaside Avenue, Building 20, San Pedro, California, 90731 between 8 a.m. and 4 p.m., Monday through Friday, except Federal holidays.

FOR FURTHER INFORMATION CONTACT: Boatswain's Mate Second Class Jessica Walsh, Waterways Management Division, at (310) 732–2020.

SUPPLEMENTARY INFORMATION:

Regulatory Information

On February 19, 2002, we published a notice of proposed rulemaking (NPRM) entitled ''Safety Zone; Long Beach, CA'' in the **Federal Register** (67 FR 7321). We received no letters from the public commenting on the proposed rule. No public hearing was requested, and none was held.

Under 5 U.S.C. 553(d)(3), the Coast Guard finds that good cause exists for making this rule effective less than 30 days after publication in the **Federal Register**. Waiting 30 days after publication would delay the effective date of this safety zone beyond the event date of March 23, 2002, and that would be contrary to the need for public safety during this event.

Background and Purpose

This temporary safety zone provides for the safety of National Water Ski Racing Association (NWSRA) water ski race participants and spectators on March 23 and 24, 2002, from 8 a.m. to 5 p.m. both days. Persons and vessels are prohibited from entering into or transiting through this zone unless authorized by the Captain of the Port or his or her designated representative. By prohibiting persons and vessels from entering the waters surrounding the racecourse, the risk of high-speed collision will be significantly reduced. The U.S. Coast Guard will enforce this safety zone with assistance from the U.S. Coast Guard Auxiliary and event staff.

The following area is safety zone: All waters encompassed by lines connecting the following points, beginning at latitude 33°45′50″ N, longitude 118°10′48″ W; thence to 33°44′00″ N, 118°10′05″ W; thence to 33°44′00″ N, 118°09′26″ W; thence to 33°45′28″ N, 118°09′00″ W, and thence returning to the point of origin (North American Datum of 1983). This area is approximately 3,000 yards wide and 2,500 yards long and is centered near the oil islands off Long Beach, California.

Discussion of Comments and Changes

We received no letters from the public commenting on the proposed rule. We made one editorial change from the proposed rule to clarify that the rule will be enforced during the hours listed in paragraph (b).

Regulatory Evaluation

This rule is not a ''significant regulatory action'' under section 3(f) of Executive Order 12866, Regulatory Planning and Review, and does not require an assessment of potential costs and benefits under section 6(a)(3) of that Order. The Office of Management and Budget has not reviewed it under that Order. It is not ''significant'' under the regulatory policies and procedures of the Department of Transportation (DOT) (44 FR 11040, February 26, 1979) because this safety zone will encompass a small portion of the waterway for limited periods of time and vessel traffic can pass safety around the affected area.

Small Entities

Under the Regulatory Flexibility Act (5 U.S.C. 601–612), we have considered whether this rule would have a significant economic impact on a substantial number of small entities. The term ''small entities'' comprises small businesses, not-for-profit organizations that are independently owned and operated and are not dominant in their fields, and governmental jurisdictions with populations of less than 50,000.

The Coast Guard certifies under 5 U.S.C. 605(b) that this rule will not have a significant economic impact on a substantial number of small entities.

We expect that this rule will affect the following entities, some of which may be small entities: The owners and operators of private and commercial vessels intending to transit or anchor in a small portion of the port of Long Beach. The impact to these entities would not, however, be significant since this zone will encompass a small portion of the waterway for limited periods of time.

We received no letters from the public commenting on the proposed rule's impact to small entities and no changes to the proposed rule were made.

Assistance for Small Entities

Under section 213(a) of the Small Business Regulatory Enforcement Fairness Act of 1996 (Pub. L. 104–121), we offered to assist small entities in understanding the rule so that they could better evaluate its effects on them and participate in the rulemaking process. No requests for assistance to small entities were received.

Small businesses may send comments on the actions of Federal employees who enforce, or otherwise determine compliance with, Federal regulations to the Small Business and Agriculture Regulatory Enforcement Ombudsman and the Regional Small Business Regulatory Fairness Boards. The Ombudsman evaluates these actions annually and rates each agency's responsiveness to small business. If you wish to comment on actions by employees of the Coast Guard, call 1–888–REG–FAIR (1–888–734–3247).

Collection of Information

This rule calls for no new collection of information under the Paperwork Reduction Act of 1995 (44 U.S.C. 3501–3520).

Federalism

A rule has implications for federalism under Executive Order 13132, Federalism, if it has a substantial direct effect on State or local governments and would either preempt State law or impose a substantial direct cost of compliance on them. We have analyzed this rule under that Order and have determined that it does not have implications for federalism.

We received no letters commenting on the proposed rule implications for federalism and no changes to the proposed rule were made.

Unfunded Mandates Reform Act

The Unfunded Mandates Reform Act of 1995 (2 U.S.C. 1531–1538) requires Federal agencies to assess the effects of their discretionary regulatory actions. In particular, the Act addresses actions that may result in the expenditure by a State, local, or tribal government, in the aggregate, or by the private sector of $100,000,000 or more in any one year. Though this rule will not result in such an expenditure, we do discuss the effects of this rule elsewhere in this preamble.

We received no letters commenting on the proposed rule and no changes to the proposed rule were made.

Taking of Private Property

This rule will not effect a taking of private property or otherwise have taking implications under Executive Order 12630, Governmental Actions and Interference with Constitutionally Protected Property Rights.

We received no letters commenting on the proposed rule effecting a taking of private property and no changes to the proposed rule were made.

Civil Justice Reform

This rule meets applicable standards in sections 3(a) and 3(b)(2) of Executive Order 12988, Civil Justice Reform, to minimize litigation, eliminate ambiguity, and reduce burden.

We received no letters commenting on the proposed rule complying with Civil Justice Reform and no changes to the proposed rule were made.

Protection of Children

We have analyzed this rule under Executive Order 13045, Protection of Children from Environmental Health Risks and Safety Risks. This rule is not an economically significant rule and does not create an environmental risk to health or risk to safety that may disproportionately affect children.

We received no letters commenting on the proposed rule environmental risks to children and no changes to the proposed rule were made.

Indian Tribal Governments

This rule does not have tribal implications under Executive Order 13175, Consultation and Coordination with Indian Tribal Governments, because it does not have a substantial direct effect on one or more Indian tribes, on the relationship between the Federal Government and Indian tribes, or on the distribution of power and responsibilities between the Federal Government and Indian tribes.

We received no letters commenting on the proposed rule implications for tribal governments and no changes to the proposed rule were made.

Energy Effects

We have analyzed this rule under Executive Order 13211, Actions Concerning Regulations That Significantly Affect Energy Supply, Distribution, or Use. We have determined that it is not a ''significant energy action'' under that order because it is not a ''significant regulatory action'' under Executive Order 12866 and is not likely to have a significant adverse effect on the supply, distribution, or use of energy. It has not been designated by the Administrator of the Office of Information and Regulatory Affairs as a significant energy action. Therefore, it does not require a Statement of Energy Effects under Executive Order 13211.

We received no letters commenting on the proposed rule effect on energy and no changes to the proposed rule were made.

Environment

We have considered the environmental impact of this rule and concluded that under figure 2–1, paragraph (34)(g), of Commandant Instruction M16475.lD, this rule is categorically excluded from further environmental documentation because it is a safety zone in effect for only 2 days. A ''Categorical Exclusion Determination'' is not required.

We received no letters commenting on the proposed rule environmental impact and no changes to the proposed rule were made.

List of Subjects in 33 CFR Part 165

Harbors, Marine safety, Navigation (water), Reporting and recordkeeping requirements, Security measures, Waterways.

For the reasons discussed in the preamble, the Coast Guard amends 33 CFR part 165 as follows:

PART 165—REGULATED NAVIGATION AREAS AND LIMITED ACCESS AREAS

1. The authority citation for part 165 continues to read as follows:

Authority: 33 U.S.C. 1231; 50 U.S.C. 191, 33 CFR 1.05–1(g), 6.04–1, 6.04–6, 160.5; 49 CFR 1.46.

2. From 8 a.m. on March 23, 2002, to 5 p.m. on March 24, 2002, add § 165.T11–063 to read as follows:

§ 165.T11–063 Safety Zone; Long Beach, CA.

(a) Location. The following area is a safety zone: All waters encompassed by lines connecting the following points, beginning at latitude 33°45′50″ N, longitude 118°10′48″ W; thence to 33°44′00″ N, 118°10′05″ W; thence to 33°44′00″ N, 118°09′26″ W; thence to 33°45′28″ N, 118°09′00″ W; and thence returning to the point of origin. (NAD83)

(b) Enforcement period. This section will be enforced from 8 a.m. to 5 p.m. (PST) on March 23, 2002 and from 8 a.m. to 5 p.m. (PST) on March 24, 2002.

(c) Regulations. In accordance with the general regulations in § 165.23 of this part entry into, transit through, or anchoring within the safety zone is prohibited unless authorized by the Coast Guard Captain of the Port, Los Angeles-Long Beach, or his or her designated representative.

Dated: March 6, 2002.

J. M. Holmes,

Captain, U. S. Coast Guard, Captain of the Port, Los Angeles-Long Beach, California.

[FR Doc. 02–6647 Filed 3–19–02 8:45am]

BILLING CODE 4910–15–U

ENVIRONMENTAL PROTECTION AGENCY

40 CFR Part 82

[FRL–7160–3]

Protection of Stratospheric Ozone: Removal of Restrictions on Certain Fire Suppression Substitutes for Ozone-Depleting Substances; and Listing of Substitutes; Correction

AGENCY: Environmental Protection Agency.

ACTION: Direct final rule, correction.

SUMMARY: The Environmental Protection Agency published in the **Federal Register** of January 29, 2002, a direct final rule related to the Significant New Alternatives Policy (SNAP) program. A couple of typographical errors in chemical formulas were made inadvertently. This document identifies and corrects these errors.

DATES: These corrections are effective on April 1, 2002.

FOR FURTHER INFORMATION CONTACT: Margaret Sheppard by telephone at (202) 564–9163, by fax at (202) 565–2141, by e-mail at *sheppard.margaret@epa.gov*, or by mail at U.S. Environmental Protection Agency, Mail Code 6205J, Washington, DC 20460. Overnight or courier deliveries should be sent to the office location at 501 3rd Street, NW.,

Washington, DC, 20001. Further information can be found by calling the Stratospheric Protection Hotline at (800) 296–1996, or by viewing EPA's Ozone Depletion World Wide Web site at *www.epa.gov/ozone/title6/snap/.*

SUPPLEMENTARY INFORMATION: The Environmental Protection Agency published in the **Federal Register** of January 29, 2002 (66 FR 4185), a Direct Final Rule related to the Significant New Alternatives Policy (SNAP). In FR Doc. 02–1495, published on January 29, 2002, a couple of typographical errors to chemical formulas were made inadvertently. This document identifies and corrects these errors.

In FR Doc. 02–1495, published on January 29, 2002 (66 FR 4185), make the following corrections:

1. On page 4191 in the last paragraph of the third column, correct the formula ''C_4H_{10}'' to read ''C_4F_{10}.''

2. On page 4200 in the third column, amendatory instruction 3a. is corrected to read as follows:

a. Revising the table entitled ''Fire Suppression and Explosion Protection—Acceptable Subjects to Use Conditions: Total Flooding Agents'' by removing the entries ''C_3F_8'', ''CF_3I'' and ''Gelled Halocarbon/Dry Chemical Suspension''.

Administrative Requirements

Section 553 of the Administrative Procedure Act, 5 U.S.C. 553(b)(B), provides that, when an agency for good cause finds that notice and public procedure are impracticable, unnecessary or contrary to the public interest, the agency may issue a rule without providing notice and an opportunity for public comment. We have determined that there is good cause for making today's rule final without prior proposal and opportunity for comment because we are merely correcting an incorrect citation in a previous action. Thus, notice and public procedure are unnecessary. We find that this constitutes good cause under 5 U.S.C. 553(b)(B).

Under Executive Order 12866 (58 FR 51735, October 4, 1993), this correction is not a ''significant regulatory action'' and is therefore not subject to review by the Office of Management and Budget (OMB). Because the EPA has made a ''good cause'' finding that this correction is not subject to notice and comment requirements under the Administrative Procedure Act or any other statute, it is not subject to the regulatory flexibility provisions of the Regulatory Flexibility Act (5 U.S.C. 601 *et seq.*), or to sections 202 and 205 of the Unfunded Mandates Reform Act of 1995 (UMRA) (Public Law 104–4). In addition, this correction does not significantly or uniquely affect small governments or impose a significant intergovernmental mandate, as described in sections 203 and 204 of the UMRA. This correction also does not significantly or uniquely affect the communities of tribal governments, as specified by Executive Order 13175 (65 FR 67249, November 6, 2000). This correction does not have substantial direct effects on the States, or on the relationship between the national government and the States, as specified in Executive Order 13132 (64 FR 43255, August 10, 1999). This correction also is not subject to Executive Order 13045 (62 FR 19885, April 23, 1997) because it is not economically significant. This rule is not a ''significant energy action'' as defined in Executive Order 13211, ''Actions Concerning Regulations That Significantly Affect Energy Supply, Distribution, or Use'' (66 FR 28355 (May 22, 2001)) because it is not likely to have a significant adverse effect on the supply, distribution, or use of energy.

This correction does not involve technical standards; thus, the requirements of section 12(d) of the National Technology Transfer and Advancement Act (NTTAA) of 1995 (15 U.S.C. 272) do not apply. This correction also does not involve special consideration of environmental justice related issues as required by Executive Order 12898 (59 FR 7629, February 16, 1994). This correction does not impose an information collection burden under the provisions of the Paperwork Reduction Act of 1995 (44 U.S.C. 3501 *et seq.*). The EPA's compliance with these statutes and Executive Orders for the underlying rule is discussed in the rule for the Removal of Restrictions on Certain Fire Suppression Substitutes for Ozone-Depleting Substances; and Listing of Substitutes.

The Congressional Review Act (5 U.S.C. 801 *et seq.*), as added by the Small Business Regulatory Enforcement Fairness Act of 1996, generally provides that before a rule may take effect, the agency promulgating the rule must submit a rule report, which includes a copy of the rule, to each House of the Congress and to the Comptroller General of the United States. Section 808 allows the issuing agency to make a rule effective sooner than otherwise provided by the Congressional Review Act if the agency makes a good cause finding that notice and public procedure is impracticable, unnecessary, or contrary to the public interest. This determination must be supported by a brief statement (5 U.S.C. 808(2)). As stated previously, the EPA has made such a good cause finding, including the reasons therefor, and established an effective date of April 1, 2002. The EPA will submit a report containing this rule and other required information to the U.S. Senate, the U.S. House of Representatives, and the Comptroller General of the United States prior to publication of the correction in the **Federal Register**. This correction is not a ''major rule'' as defined by 5 U.S.C. 804(2).

List of Subjects in 40 CFR Part 82

Environmental protection, Administrative practice and procedure, Air pollution control, Reporting and recordkeeping requirements.

Dated: February 25, 2002.

Drusilla Hufford,

Director, Global Programs Division.

[FR Doc. 02–6722 Filed 3–19–02; 8:45 am]

BILLING CODE 6560–50–P

ENVIRONMENTAL PROTECTION AGENCY

40 CFR Part 180

[OPP–301224; FRL–6828–5]

2070–AB78

Isoxadifen-ethyl; Pesticide Tolerance

AGENCY: Environmental Protection Agency (EPA).

ACTION: Final rule.

SUMMARY: This regulation establishes tolerances for combined residues of isoxadifen-ethyl (ethyl 5,5-diphenyl-2-isoxazoline-3-carboxylate, (CAS No. 163520–33–0), and its metabolite: 4,5-dihydro-5,5-diphenyl-3-isoxazolecarboxylic acid, in or on corn commodities. Aventis CropScience requested this tolerance under the Federal Food, Drug, and Cosmetic Act (FFDCA), as amended by the Food Quality Protection Act (FQPA) of 1996.

DATES: This regulation is effective March 20, 2002. Objections and requests for hearings, identified by docket control number OPP–301224, must be received by EPA on or before May 20, 2002.

ADDRESSES: Written objections and hearing requests may be submitted by mail, in person, or by courier. Please follow the detailed instructions for each method as provided in Unit VI. of the **SUPPLEMENTARY INFORMATION**. To ensure proper receipt by EPA, your objections and hearing requests must identify docket control number OPP–301224 in the subject line on the first page of your response.

FOR FURTHER INFORMATION CONTACT: By mail: Kathryn Boyle, Registration

Division (7505C), Office of Pesticide Programs, Environmental Protection Agency, 1200 Pennsylvania Ave., NW.,Washington, DC 20460; telephone number: (703) 305–6304; and e-mail address: boyle.kathryn@epa.gov.

SUPPLEMENTARY INFORMATION:

I. General Information

A. Does this Action Apply to Me?

You may be affected by this action if you are an agricultural producer, food manufacturer, or pesticide manufacturer. Potentially affected categories and entities may include, but are not limited to:

Categories	NAICS Codes	Examples of Potentially Affected Entities
Industry	111 112 311 32532	Crop production Animal production Food manufacturing Pesticide manufacturing

This listing is not intended to be exhaustive, but rather provides a guide for readers regarding entities likely to be affected by this action. Other types of entities not listed in the table could also be affected. The North American Industrial Classification System (NAICS) codes have been provided to assist you and others in determining whether or not this action might apply to certain entities. If you have questions regarding the applicability of this action to a particular entity, consult the person listed under **FOR FURTHER INFORMATION CONTACT**.

B. How Can I Get Additional Information, Including Copies of this Document and Other Related Documents?

1. *Electronically*. You may obtain electronic copies of this document, and certain other related documents that might be available electronically, from the EPA Internet Home Page at http://www.epa.gov/. To access this document, on the Home Page select ''Laws and Regulations,'' ''Regulations and Proposed Rules,'' and then look up the entry for this document under the ''**Federal Register**—Environmental Documents.'' You can also go directly to the **Federal Register** listings at http://www.epa.gov/fedrgstr/. A frequently updated electronic version of 40 CFR part 180 is available at http://www.access.gpo.gov/nara/cfr/cfrhtml_00/Title_40/40cfr180_00.html, a beta site currently under development.

2. *In person*. The Agency has established an official record for this action under docket control number OPP–301224. The official record consists of the documents specifically referenced in this action, and other information related to this action, including any information claimed as Confidential Business Information (CBI). This official record includes the documents that are physically located in the docket, as well as the documents that are referenced in those documents. The public version of the official record does not include any information claimed as CBI. The public version of the official record, which includes printed, paper versions of any electronic comments submitted during an applicable comment period is available for inspection in the Public Information and Records Integrity Branch (PIRIB), Rm. 119, Crystal Mall #2, 1921 Jefferson Davis Hwy., Arlington, VA, from 8:30 a.m. to 4 p.m., Monday through Friday, excluding legal holidays. The PIRIB telephone number is (703) 305–5805.

II. Background and Statutory Findings

In the **Federal Register** of June 30, 2000 (65 FR 40632) (FRL–6592–6), EPA issued a notice pursuant to section 408 of the Federal Food, Drug, and Cosmetic Act (FFDCA), 21 U.S.C. 346a as amended by the FQPA of 1996 (Public Law 104–170) announcing the filing of a pesticide petition (PP 0E6162) for a tolerance by Aventis CropScience, P.O. Box 12014, 2 T.W. Alexander Dr., Research Triangle Park, NC 27709. This notice included a summary of the petition prepared by Aventis CropScience, the petitioner. There were no comments received in response to the notice of filing.

The petition requested that 40 CFR 180.570 be amended by establishing a tolerance for the combined residues of the inert ingredient, herbicide safener isoxadifen-ethyl (ethyl 5,5-diphenyl-2-isoxazoline-3-carboxylate, (CAS No. 163520–33–0), and its metabolite: 4,5-dihydro-5,5-diphenyl-3-isoxazolecarboxylic acid, in or on corn, grain at 0.10 part per million (ppm); corn, forage at 0.30 ppm; and corn, stover 0.50 (ppm). The Agency determined that the tolerance levels should be changed (lowered) and that the corn commodities should be expressed as in the Food and Feed Vocabulary; therefore, the tolerance levels are corn, field, grain and corn, field, forage both at 0.10 ppm and corn, field, stover at 0.20 ppm.

Section 408(b)(2)(A)(i) of the FFDCA allows EPA to establish a tolerance (the legal limit for a pesticide chemical residue in or on a food) only if EPA determines that the tolerance is ''safe.'' Section 408(b)(2)(A)(ii) defines ''safe'' to mean that ''there is a reasonable certainty that no harm will result from aggregate exposure to the pesticide chemical residue, including all anticipated dietary exposures and all other exposures for which there is reliable information.'' This includes exposure through drinking water and in residential settings, but does not include occupational exposure. Section 408(b)(2)(C) requires EPA to give special consideration to exposure of infants and children to the pesticide chemical residue in establishing a tolerance and to ''ensure that there is a reasonable certainty that no harm will result to infants and children from aggregate exposure to the pesticide chemical residue. . . .''

EPA performs a number of analyses to determine the risks from aggregate exposure to pesticide residues. For further discussion of the regulatory requirements of section 408 and a complete description of the risk assessment process, see the final rule on Bifenthrin Pesticide Tolerances November 26, 1997 (62 FR 62961) (FRL–5754–7).

III. Aggregate Risk Assessment and Determination of Safety

Consistent with section 408(b)(2)(D), EPA has reviewed the available scientific data and other relevant information in support of this action. EPA has sufficient data to assess the hazards of and to make a determination on aggregate exposure, consistent with section 408(b)(2), for a tolerance for combined residues of isoxadifen-ethyl (ethyl 5,5-diphenyl-2-isoxazoline-3-carboxylate, (CAS No. 163520–33–0), and its metabolite: 4,5-dihydro-5,5-diphenyl-3-isoxazolecarboxylic acid, on corn commodities.

EPA's assessment of exposures and risks associated with establishing the above tolerances was published in the **Federal Register** of June 21, 2001 (66 FR 33179) (FRL–6786–1), when the time-limited tolerances (expiring June 21, 2004) for combined residues of isoxadifen-ethyl for rice commodities were established. The assessment that was discussed in the above final rule considered both corn and rice. All risks were less than the Agency's level of concern. The corn tolerances were not established at that time, since the enforcement method for corn had not yet been validated. For a complete description of the toxicological profile and endpoints, the uncertainty factors, the exposure assessment which includes dietary exposure for both food and drinking water, the safety factor for infants and children, and aggregate risk

for isoxadifen-ethyl see the final rule of June 21, 2001.

Based on the previous published assessment, EPA concludes that there is a reasonable certainty that no harm will result to the general population, and to infants and children from aggregate exposure to residues of isoxadifen-ethyl (ethyl 5,5-diphenyl-2-isoxazoline-3-carboxylate, (CAS No. 163520–33–0), and its metabolite: 4,5-dihydro-5,5-diphenyl-3-isoxazolecarboxylic acid, on corn, field, grain and corn, field, forage both at 0.10 ppm and corn, field, stover at 0.20 ppm.

IV. Other Considerations

A. Analytical Enforcement Methodology

The petitioner submitted the results of an Independent Laboratory Validation (ILV) for isoxadifen-ethyl and its major metabolites. The method is gas chromotography using ion trap mass selective detection. The ILV reported that overall the method worked well. There is thus a practical method suitable to enforce the tolerance expression. The method may be requested from: Calvin Furlow, PIRIB, IRSD (7502C), Office of Pesticide Programs, Environmental Protection Agency, 1200 Pennsylvania Ave., NW., Washington, DC 20460; telephone number: (703) 305–5229; e-mail address: furlow.calvin@epa.gov.

B. International Residue Limits

There are no CODEX, Canadian, or Mexican tolerances/MRLs for isoxadifen-ethyl residues.

C. Conditions

The following data gap has been identified for isoxadifen-ethyl in/on corn: storage stability data. Preliminary results only have been submitted as the study is still on-going. The Agency believes that the available data and risk assessment support the determination that there is a reasonable certainty of no harm and the establishment of permanent tolerances for isoxadifen-ethyl in/on corn. The registration of a formulation containing isoxadifen-ethyl will be time-limited and conditional upon submission of this information.

V. Conclusion

Therefore, tolerances are established for residues of isoxadifen-ethyl (ethyl 5,5-diphenyl-2-isoxazoline-3-carboxylate, (CAS No. 163520–33–0), and its metabolite: 4,5-dihydro-5,5-diphenyl-3-isoxazolecarboxylic acid, on corn, field, grain and corn, field, forage both at 0.10 ppm and corn, field, stover at 0.20 ppm.

VI. Objections and Hearing Requests

Under section 408(g) of the FFDCA, as amended by the FQPA, any person may file an objection to any aspect of this regulation and may also request a hearing on those objections. The EPA procedural regulations which govern the submission of objections and requests for hearings appear in 40 CFR part 178. Although the procedures in those regulations require some modification to reflect the amendments made to the FFDCA by the FQPA of 1996, EPA will continue to use those procedures, with appropriate adjustments, until the necessary modifications can be made. The new section 408(g) provides essentially the same process for persons to ''object'' to a regulation for an exemption from the requirement of a tolerance issued by EPA under new section 408(d), as was provided in the old FFDCA sections 408 and 409. However, the period for filing objections is now 60 days, rather than 30 days.

A. What Do I Need to Do to File an Objection or Request a Hearing?

You must file your objection or request a hearing on this regulation in accordance with the instructions provided in this unit and in 40 CFR part 178. To ensure proper receipt by EPA, you must identify docket control number OPP–301224 in the subject line on the first page of your submission. All requests must be in writing, and must be mailed or delivered to the Hearing Clerk on or before May 20, 2002.

1. *Filing the request.* Your objection must specify the specific provisions in the regulation that you object to, and the grounds for the objections (40 CFR 178.25). If a hearing is requested, the objections must include a statement of the factual issues(s) on which a hearing is requested, the requestor's contentions on such issues, and a summary of any evidence relied upon by the objector (40 CFR 178.27). Information submitted in connection with an objection or hearing request may be claimed confidential by marking any part or all of that information as CBI. Information so marked will not be disclosed except in accordance with procedures set forth in 40 CFR part 2. A copy of the information that does not contain CBI must be submitted for inclusion in the public record. Information not marked confidential may be disclosed publicly by EPA without prior notice.

Mail your written request to: Office of the Hearing Clerk (1900), Environmental Protection Agency, 1200 Pennsylvania Ave., NW., Washington, DC 20460. You may also deliver your request to the Office of the Hearing Clerk in Rm. C400, Waterside Mall, 401 M St., SW., Washington, DC 20460. The Office of the Hearing Clerk is open from 8 a.m. to 4 p.m., Monday through Friday, excluding legal holidays. The telephone number for the Office of the Hearing Clerk is (202) 260–4865.

2. *Tolerance fee payment.* If you file an objection or request a hearing, you must also pay the fee prescribed by 40 CFR 180.33(i) or request a waiver of that fee pursuant to 40 CFR 180.33(m). You must mail the fee to: EPA Headquarters Accounting Operations Branch, Office of Pesticide Programs, P.O. Box 360277M, Pittsburgh, PA 15251. Please identify the fee submission by labeling it ''Tolerance Petition Fees.''

EPA is authorized to waive any fee requirement ''when in the judgement of the Administrator such a waiver or refund is equitable and not contrary to the purpose of this subsection.'' For additional information regarding the waiver of these fees, you may contact James Tompkins by phone at (703) 305–5697, by e-mail at tompkins.jim@epa.gov, or by mailing a request for information to Mr. Tompkins at Registration Division (7505C), Office of Pesticide Programs, Environmental Protection Agency, 1200 Pennsylvania Ave., NW., Washington, DC 20460.

If you would like to request a waiver of the tolerance objection fees, you must mail your request for such a waiver to: James Hollins, Information Resources and Services Division (7502C), Office of Pesticide Programs, Environmental Protection Agency, 1200 Pennsylvania Ave., NW., Washington, DC 20460.

3. *Copies for the docket.* In addition to filing an objection or hearing request with the Hearing Clerk as described in Unit VI.A., you should also send a copy of your request to the PIRIB for its inclusion in the official record that is described in Unit I.B.2. Mail your copies, identified by docket control number OPP–301224, to: Public Information and Records Integrity Branch, Information Resources and Services Division (7502C), Office of Pesticide Programs, Environmental Protection Agency, 1200 Pennsylvania Ave., NW., Washington, DC 20460. In person or by courier, bring a copy to the location of the PIRIB described in Unit I.B.2. You may also send an electronic copy of your request via e-mail to: opp-docket@epa.gov. Please use an ASCII file format and avoid the use of special characters and any form of encryption. Copies of electronic objections and hearing requests will also be accepted on disks in WordPerfect 6.1/8.0 or ASCII file format. Do not include any CBI in your electronic copy. You may also submit an electronic copy of your

request at many Federal Depository Libraries.

B. When Will the Agency Grant a Request for a Hearing?

A request for a hearing will be granted if the Administrator determines that the material submitted shows the following: There is a genuine and substantial issue of fact; there is a reasonable possibility that available evidence identified by the requestor would, if established resolve one or more of such issues in favor of the requestor, taking into account uncontested claims or facts to the contrary; and resolution of the factual issues(s) in the manner sought by the requestor would be adequate to justify the action requested (40 CFR 178.32).

VII. Regulatory Assessment Requirements

This final rule establishes a tolerance under FFDCA section 408(d) in response to a petition submitted to the Agency. The Office of Management and Budget (OMB) has exempted these types of actions from review under Executive Order 12866, entitled *Regulatory Planning and Review* (October 4, 1993 58 FR 51735). Because this rule has been exempted from review under Executive Order 12866 due to its lack of significance, this rule is not subject to Executive Order 13211, *Actions Concerning Regulations That Significantly Affect Energy Supply, Distribution, or Use* May 22, 2001 (66 FR 28355). This final rule does not contain any information collections subject to OMB approval under the Paperwork Reduction Act (PRA), 44 U.S.C. 3501 *et seq.*, or impose any enforceable duty or contain any unfunded mandate as described under Title II of the Unfunded Mandates Reform Act of 1995 (UMRA) (Public Law 104–4). Nor does it require any special considerations under Executive Order 12898, entitled *Federal Actions to Address Environmental Justice in Minority Populations and Low-Income Populations* February 16, 1994, (59 FR 7629) or OMB review or any Agency action under Executive Order 13045, entitled *Protection of Children from Environmental Health Risks and Safety Risks* (62 FR 19885, April 23, 1997). This action does not involve any technical standards that would require Agency consideration of voluntary consensus standards pursuant to section 12(d) of the National Technology Transfer and Advancement Act of 1995 (NTTAA), Public Law 104–113, section 12(d) (15 U.S.C. 272 note). Since tolerances and exemptions that are established on the basis of a petition under FFDCA section 408(d), such as the tolerance in this final rule, do not require the issuance of a proposed rule, the requirements of the Regulatory Flexibility Act (RFA) (5 U.S.C. 601 *et seq*) do not apply. In addition, the Agency has determined that this action will not have a substantial direct effect on States, on the relationship between the national government and the States, or on the distribution of power and responsibilities among the various levels of government, as specified in Executive Order 13132, entitled *Federalism* (64 FR 43255, August 10, 1999). Executive Order 13132 requires EPA to develop an accountable process to ensure ''meaningful and timely input by State and local officials in the development of regulatory policies that have federalism implications.'' ''Policies that have federalism implications'' is defined in the Executive Order to include regulations that have ''substantial direct effects on the States, on the relationship between the national government and the States, or on the distribution of power and responsibilities among the various levels of government.'' This final rule directly regulates growers, food processors, food handlers and food retailers, not States. This action does not alter the relationships or distribution of power and responsibilities established by Congress in the preemption provisions of FFDCA section 408(n)(4). For these same reasons, the Agency has determined that this rule does not have any ''tribal implications'' as described in Executive Order 13175, entitled *Consultation and Coordination with Indian Tribal Governments* (65 FR 67249, November 6, 2000). Executive Order 13175, requires EPA to develop an accountable process to ensure ''meaningful and timely input by tribal officials in the development of regulatory policies that have tribal implications.'' ''Policies that have tribal implications'' is defined in the Executive Order to include regulations that have ''substantial direct effects on one or more Indian tribes, on the relationship between the Federal government and the Indian tribes, or on the distribution of power and responsibilities between the Federal government and Indian tribes.'' This rule will not have substantial direct effects on tribal governments, on the relationship between the Federal government and Indian tribes, or on the distribution of power and responsibilities between the Federal government and Indian tribes, as specified in Executive Order 13175. Thus, Executive Order 13175 does not apply to this rule.

VIII. Submission to Congress and the Comptroller General

The Congressional Review Act, 5 U.S.C. 801 *et seq.*, as added by the Small Business Regulatory Enforcement Fairness Act of 1996, generally provides that before a rule may take effect, the agency promulgating the rule must submit a rule report, which includes a copy of the rule, to each House of the Congress and to the Comptroller General of the United States. EPA will submit a report containing this rule and other required information to the U.S. Senate, the U.S. House of Representatives, and the Comptroller General of the United States prior to publication of this final rule in the **Federal Register**. This final rule is not a ''major rule'' as defined by 5 U.S.C. 804(2).

List of Subjects in 40 CFR Part 180

Environmental protection, Administrative practice and procedure, Agricultural commodities, Pesticides and pests, Reporting and recordkeeping requirements.

Dated: March 11, 2002.

Peter Caulkins,

Acting Director, Registration Division, Office of Pesticide Programs.

Therefore, 40 CFR chapter I is amended as follows:

PART 180—[AMENDED]

1. The authority citation for part 180 continues to read as follows:

Authority: 21 U.S.C. 321(q), 346(a) and 374.

2. Section 180.570 is amended by revising paragraph (a) to read as follows:

§ 180.570 Isoxadifen-ethyl; tolerances for residues.

(a) *General.* (1) Tolerances are established for residues of isoxadifen-ethyl (ethyl 5,5-diphenyl-2-isoxazoline-3-carboxylate, (CAS No. 163520–33–0), and its metabolite: 4,5-dihydro-5,5-diphenyl-3-isoxazolecarboxylic acid, when used as an inert ingredient (safener) in or on the following raw agricultural commodities when applied at an annual application rate of 0.08 pound of safener per acre.

Commodity	Parts per million
Corn, field, grain	0.10
Corn, field, forage	0.10
Corn, field, stover	0.20

(2) Tolerances that expire as indicated in the table below are established for residues of isoxadifen-ethyl (ethyl 5,5-diphenyl-2-isoxazoline-3-carboxylate, CAS No. 163520–33–0) and its metabolites: 4,5-dihydro-5,5-diphenyl-3-isoxazolecarboxylic acid and β-hydroxy-β-benezenepropanenitrile when in the commodities listed below. This safener will be used only in conjunction with the active ingredient fenoxaprop-*p*-ethyl, at a rate of 0.17 pound of safener per acre.

Commodity	Parts per million	Expiration/Revocation Date
Rice, bran	0.80	6/21/04
Rice, grain	0.10	6/21/04
Rice, hulls	0.50	6/21/04
Rice, straw	0.25	6/21/04

* * * * *

[FR Doc. 02–6727 Filed 3–19–02; 8:45 am]

BILLING CODE 6560–50–S

ENVIRONMENTAL PROTECTION AGENCY

40 CFR Part 721

[OPPTS–50644A; FRL–6817–8]

RIN 2070–AB27

Modification of Significant New Uses of Certain Chemical Substances

AGENCY: Environmental Protection Agency (EPA).

ACTION: Final rule.

SUMMARY: Under section 5(a)(2) of the Toxic Substances Control Act (TSCA) and 40 CFR 721.185, EPA is amending three significant new use rules (SNURs) to allow certain uses without requiring a significant new use notice (SNUN). EPA is amending these rules based on review of new toxicity test data on one chemical and review of SNUNs for the other two chemicals. The amended SNURs would continue to require a SNUN for new uses that may involve significant changes in human or environmental exposure.

DATES: This rule is effective May 20, 2002.

FOR FURTHER INFORMATION CONTACT: *For general information contact*: Barbara Cunningham, Acting Director, Environmental Assistance Division, Office of Pollution Prevention and Toxics (7408M), Environmental Protection Agency, 1200 Pennsylvania Ave., NW., Washington, DC 20460; telephone number: (202) 554–1404; e-mail address: TSCA-Hotline@epa.gov.

For technical information contact: James Alwood, Chemical Control Division, Office of Pollution Prevention and Toxics (7405M), Environmental Protection Agency, 1200 Pennsylvania Ave., NW., Washington, DC 20460; telephone number: (202) 564–8974; e-mail address: alwood.jim@epa.gov.

SUPPLEMENTARY INFORMATION:

I. General Information

A. Does this Action Apply to Me?

You may be potentially affected by this action if you manufacture, import, process, or use the chemical substances contained in this rule. Potentially affected categories and entities may include, but are not limited to:

Categories	NAICS codes	Examples of potentially affected entities
Chemical manufacturers	325	Manufacturers, importers, processors, and users of chemicals
Petroleum and coal product industries	324	Manufacturers, importers, processors, and users of chemicals

This listing is not intended to be exhaustive, but rather provides a guide for readers regarding entities likely to be affected by this action. Other types of entities not listed in the table in this unit could also be affected. The North American Industrial Classification System (NAICS) codes have been provided to assist you and others in determining whether or not this action applies to certain entities. To determine whether you or your business is affected by this action, you should carefully examine the applicability provisions in title 40 of the Code of Federal Regulations (CFR) at 40 CFR 721.5. If you have any questions regarding the applicability of this action to a particular entity, consult the technical person listed under **FOR FURTHER INFORMATION CONTACT.**

B. How Can I Get Additional Information, Including Copies of this Document and Other Related Documents?

1. *Electronically*. You may obtain electronic copies of this document, and certain other related documents that might be available electronically, from the EPA Internet Home Page at http://www.epa.gov/. To access this document, on the Home Page select ''Laws and Regulations,'' ''Regulations and Proposed Rules,'' and then look up the entry for this document under the ''**Federal Register—**Environmental Documents.'' You can also go directly to the **Federal Register** listings at http://www.epa.gov/fedrgstr/. A frequently updated electronic version of 40 CFR part 721 is available at http://www.access.gpo.gov/nara/cfr/cfrhtml_00/Title_40/40cfr721_00.html, a beta site currently under development.

2. *In person*. The Agency has established an official record for this action under docket control number OPPTS–50644A. The official record consists of the documents specifically referenced in this action, any public comments received during an applicable comment period, and other information related to this action, including any information claimed as Confidential Business Information (CBI). This official record includes the documents that are physically located in the docket, as well as the documents that are referenced in those documents. The public version of the official record does not include any information claimed as CBI. The public version of the official record, which includes printed, paper versions of any electronic comments submitted during

an applicable comment period, is available for inspection in the TSCA Nonconfidential Information Center, North East Mall Rm. B–607, Waterside Mall, 401 M St., SW., Washington, DC. The Center is open from noon to 4 p.m., Monday through Friday, excluding legal holidays. The telephone number for the Center is (202) 260–7099.

II. Background

A. What Action is the Agency Taking?

The Agency proposed the modification of these SNURs in the **Federal Register** of October 30, 2001 (66 FR 54742) (FRL–6798–7). The background and reasons for the modification of each individual SNUR are set forth in the preamble to the proposed SNUR modification. The comment period closed on November 29, 2001. EPA received no comments regarding these SNURS. Therefore, EPA is issuing the modified SNURs.

B. What is the Agency's Authority for Taking this Action?

TSCA section 5(a)(2) and 40 CFR part 721 authorize EPA to determine that a use of a chemical substance is a ''significant new use.'' EPA must make this determination by rule after considering all relevant factors, including those listed in section 5(a)(2) of TSCA. Once EPA promulgates a rule designating ''significant new uses'' for a given chemical substance, section 5(a)(1)(B) of TSCA requires persons to submit a notice to EPA at least 90 days before they manufacture, import, or process the substance for that use. The mechanism for reporting under this requirement is established under 40 CFR 721.5.

Section 5(a)(1) of TSCA (15 U.S.C. 2604(a)(1)) and its implementing regulations at 40 CFR parts 720 and 721 require that any person intending to manufacture a new chemical substance, or to manufacture or process any chemical substance for a significant new use, must give EPA 90-days advance written notice in the form of a pre-manufacture notice (PMN) or SNUN, respectively.

Upon reviewing those notices, if EPA makes certain determinations regarding potential exposures and risks that may be presented by the activities associated with the chemical, EPA may regulate the chemical by issuing an order under TSCA section 5(e) and/or a SNUR under TSCA section 5(a)(2) and 40 CFR part 721. The TSCA section 5(e) order governs only the entity who submitted the PMN, whereas the section 5(a)(2) SNUR applies to all manufacturers and processors of the same chemical.

EPA may respond to SNUNs by issuing or modifying a TSCA section 5(e) consent order and/or amending the SNUR promulgated under TSCA section 5(a)(2). Amendment of the SNUR will often be necessary to allow companies other than the SNUN submitter to engage in the newly authorized use(s), because even after a manufacturer submits a SNUN and the review period expires, processors of the same substance still must submit a SNUN before engaging in the significant new use. Provisions regarding EPA's authority to modify or revoke SNUR requirements appear at 40 CFR 721.185.

EPA responded to PMN P–95–1411 by issuing a TSCA section 5(e) consent order and TSCA section 5(a)(2) SNUR to address concerns for both human health and the environment. Based on data from a 90-subchronic oral toxicity study in rats, submitted pursuant to the terms of the 5(e) consent order, EPA however, no longer concludes that the PMN substance may present an unreasonable risk to human health. Therefore, EPA has revoked the section 5(e) consent order entirely and, pursuant to TSCA section5(a)(2) and 40 CFR 721.185, is amending the SNUR to remove the human health related notice requirements, leaving only the notification requirements related to environmental releases.

EPA responded to PMNs P–97–520/521 by issuing a TSCA section 5(e) consent order requiring certain testing based on expected substantial human and environmental exposures and promulgating a TSCA section 5(a)(2) SNUR to address concerns for human health. In response to SNUNs S–00–397/398 by the same manufacturer proposing new uses for the same chemicals, EPA modified the section 5(e) consent order to allow certain new uses, but with restrictions to mitigate potential risks to human health. Accordingly, pursuant to TSCA section 5(a)(2) and 40 CFR 721.185, EPA is hereby amending the corresponding SNURs to modify the significant new uses consistent with the terms of the modified section 5(e) consent order and to provide EPA an opportunity to assess the potential for significant changes in human or environmental exposure.

C. Applicability of General Provisions

General provisions for SNURs appear under subpart A of 40 CFR part 721. These provisions describe persons subject to the final rule, recordkeeping requirements, exemptions to reporting requirements, and applicability of the final rule to uses occurring before the effective date of the final rule. Provisions relating to user fees appear at 40 CFR part 700. Persons subject to this SNUR must comply with the same notice requirements and EPA regulatory procedures as submitters of PMNs under section 5(a)(1)(A) of TSCA. In particular, these requirements include the information submission requirements of TSCA section 5(b) and 5(d)(1), the exemptions authorized by TSCA section 5 (h)(1), (h)(2), (h)(3), and (h)(5), and the regulations at 40 CFR part 720. Once EPA receives a SNUR notice, EPA may take regulatory action under TSCA section 5(e), 5(f), 6, or 7 to control the activities on which it has received the SNUR notice. If EPA does not take action, EPA is required under TSCA section 5(g) to explain in the **Federal Register** its reasons for not taking action.

Persons who intend to export a substance identified in a proposed or final SNUR are subject to the export notification provisions of TSCA section 12(b). The regulations that interpret TSCA section 12(b) appear at 40 CFR part 707. Persons who intend to import a chemical substance identified in a final SNUR are subject to the TSCA section 13 import certification requirements, which are codified at 19 CFR 12.118 through 12.127 and 127.28. Such persons must certify that they are in compliance with SNUR requirements. The EPA policy in support of the import certification appears at 40 CFR part 707.

III. Regulatory Assessment Requirements

Under Executive Order 12866, entitled *Regulatory Planning and Review* (58 FR 51735, October 4, 1993), the Office of Management and Budget (OMB) has determined that proposed or final SNURs are not a ''significant regulatory action'' subject to review by OMB, because they do not meet the criteria in section 3(f) of the Executive Order.

Based on EPA's experience with proposing and finalizing SNURs, State, local, and tribal governments have not been impacted by these rulemakings, and EPA does not have any reasons to believe that any State, local, or tribal government will be impacted by this rulemaking. As such, EPA has determined that this regulatory action does not impose any enforceable duty, contain any unfunded mandate, or otherwise have any affect on small governments subject to the requirements of sections 202, 203, 204, or 205 of the Unfunded Mandates Reform Act of 1995 (UMRA) (Pub. L. 104–4).

This rule does not have tribal implications because it is not expected to have substantial direct effects on Indian Tribes. This rule does not

significantly or uniquely affect the communities of Indian tribal governments, nor does it involve or impose any requirements that affect Indian Tribes. Accordingly, the requirements of section 3(b) of Executive Order 13084, entitled *Consultation and Coordination with Indian Tribal Governments* (63 FR 276755, May 19, 1998), do not apply to this rule. Executive Order 13175, entitled *Consultation and Coordination with Indian Tribal Governments* (65 FR 67249, November 6, 2000), which took effect on January 6, 2001, revokes Executive Order 13084 as of that date. EPA developed this rulemaking, however, during the period when Executive Order 13084 was in effect; thus, EPA addressed tribal considerations under Executive Order 13084. For the same reasons stated for Executive Order 13084, the requirements of Executive Order 10175 do not apply to this rule either. Nor will this action have a substantial direct effect on States, on the relationship between the national government and the States, or on the distribution of power and responsibilities among the various levels of government, as specified in Executive Order 13132, entitled *Federalism* (64 FR 43255, August 10, 1999).

In issuing this rule, EPA has taken the necessary steps to eliminate drafting errors and ambiguity, minimize potential litigation, and provide a clear legal standard for affected conduct, as required by section 3 of Executive Order 12988, entitled *Civil Justice Reform* (61 FR 4729, February 7, 1996).

EPA has complied with Executive Order 12630, entitled *Governmental Actions and Interference with Constitutionally Protected Property Rights* (53 FR 8859, March 15, 1988), by examining the takings implications of this rule in accordance with the ''Attorney General's Supplemental Guidelines for the Evaluation of Risk and Avoidance of Unanticipated Takings'' issued under the Executive Order.

This action does not entail special considerations of environmental justice related issues as delineated by Executive Order 12898, entitled *Federal Actions to Address Environmental Justice in Minority Populations and Low-Income Populations* (59 FR 7629, February 16, 1994).

This action is not subject to Executive Order 13045, entitled *Protection of Children from Environmental Health Risks and Safety Risks* (62 FR 19885, April 23, 1997), because this is not an economically significant regulatory action as defined by Executive Order 12866, and this action does not address environmental health or safety risks disproportionately affecting children.

In addition, since this action does not involve any technical standards, section 12(d) of the National Technology Transfer and Advancement Act of 1995 (NTTAA) Pub. L. 104–113 section 12(d) (15 U.S.C. 272 note), does not apply to this action.

Pursuant to section 605(b) of the Regulatory Flexibility Act (RFA) (5 U.S.C. 601 *et seq.*), the Agency hereby certifies that promulgation of this SNUR will not have a significant adverse economic impact on a substantial number of small entities. The rationale supporting this conclusion is as follows. A SNUR applies to any person (including small or large entities) who intends to engage in any activity described in the rule as a ''significant new use.'' By definition of the word ''new,'' and based on all information currently available to EPA, it appears that no small or large entities presently engage in such activity. Since a SNUR only requires that any person who intends to engage in such activity in the future must first notify EPA by submitting a SNUN, no economic impact will even occur until someone decides to engage in those activities. Although some small entities may decide to conduct such activities in the future, EPA cannot presently determine how many, if any, there may be. However, EPA's experience to date is that, in response to the promulgation of over 900 SNURs, the Agency has received fewer than 25 SNUNs. Of those SNUNs submitted, none appear to be from small entities in response to any SNUR. In addition, the estimated reporting cost for submission of a SNUN is minimal regardless of the size of the firm. Therefore, EPA believes that the potential economic impact of complying with this SNUR are not expected to be significant or adversely impact a substantial number of small entities. In a SNUR that published on June 2, 1997 (62 FR 29684) (FRL–5597–1), the Agency presented it's general determination that proposed and final SNURs are not expected to have a significant economic impact on a substantial number of small entities, which was provided to the Chief Counsel for Advocacy of the Small Business Administration.

According to the Paperwork Reduction Act (PRA), 44 U.S.C. 3501 *et seq.*, an Agency may not conduct or sponsor, and a person is not required to respond to a collection of information that requires OMB approval under the PRA, unless it has been approved by OMB and displays a currently valid OMB control number. The OMB control numbers for EPA's regulations, after initial display in the preamble of the final rule and in addition to its display on any related collection instrument, are listed in 40 CFR part 9.

The information collection requirements related to this action have already been approved by OMB pursuant to the PRA under OMB control number 2070–0012 (EPA ICR No. 574). This action does not impose any burden requiring additional OMB approval. If an entity were to submit a SNUN to the Agency, the annual burden is estimated to average between 30 and 170 hours per response. This burden estimate includes the time needed to review instructions, search existing data sources, gather and maintain the data needed, and complete, review, and submit the required SNUN.

Send any comments about the accuracy of the burden estimate, and any suggested methods for minimizing respondent burden, including through the use of automated collection techniques, to the Director, OP Regulatory Information Division (2137), Environmental Protection Agency, 1200 Pennsylvania Ave., NW., Washington, DC 20460. Please remember to include the OMB control number in any correspondence, but do not submit any completed forms to this address.

This rule is not subject to Executive Order 13211, ''*Actions Concerning Regulations That Significantly Affect Energy Supply, Distribution, or Use*'' (66 FR 28355, May 22, 2001) because it is not a significant regulatory action under Executive Order 12866.

IV. Submission to Congress and the Comptroller General

The Congressional Review Act, 5 U.S.C. 801 *et seq.*, as added by the Small Business Regulatory Enforcement Fairness Act of 1996, generally provides that before a rule may take effect, the Agency promulgating the rule must submit a rule report, which includes a copy of the rule, to each House of the Congress and to the Comptroller General of the United States. EPA will submit a report containing this rule and other required information to the U.S. Senate, the U.S. House of Representatives, and the Comptroller General of the United States prior to publication of the rule in the **Federal Register**. This rule is not a ''major rule'' as defined by 5 U.S.C. 804(2).

List of Subjects in 40 CFR Part 721

Environmental protection, Chemicals, Hazardous substances, Reporting and recordkeeping requirements.

Dated: March 1, 2002.

William H. Sanders, III

Office Director, Office of Pollution Prevention and Toxics.

Therefore, 40 CFR part 721 is amended as follows:

PART 721—[AMENDED]

1. The authority citation for part 721 continues to read as follows:

Authority: 15 U.S.C. 2604, 2607, and 2625(c).

2. Section 721.4589 is amended as follows:

a. By revising the section heading.

b. By revising paragraphs (a)(1), (a)(2)(i), and (b)(1).

c. By removing and reserving paragraph (a)(2)(ii).

d. By removing paragraphs (a)(2)(iii), (a)(2)(iv), and (b)(3).

§ 721.4589 Propanedioic acid, [(4-methoxyphenyl)methylene]-, bis(1,2,2,6,6-pentamethyl-4-piperdinyl) ester (9CI).

(a) * * * (1) The chemical substance identified as propanedioic acid, [(4-methoxyphenyl)methylene]-, bis(1,2,2,6,6-pentamethyl-4-piperdinyl) ester (9CI) (PMN P–95–1411; CAS No. 147783–69–5) is subject to reporting under this section for the significant new uses described in paragraph (a)(2) of this section.

(2) * * *

(i) *Release to water*. Requirements as specified in § 721.90 (a)(1), (b)(1), and (c)(1).

(ii) [Reserved]

(b) * * *

(1) *Recordkeeping*. Recordkeeping requirements as specified in § 721.125 (a), (b), (c), and (k) are applicable to manufacturers, importers, and processors of this substance.

* * * * *

3. Section 721.6175 is amended as follows:

a. By revising the section heading.

b. By revising paragraphs (a)(1), (a)(2)(i), and (b)(1).

c. By adding paragraphs (a)(2)(ii), (a)(2)(iii), and (b)(3).

§ 721.6175 2-Piperdinone, 1,3-dimethyl-,.

(a) * * * (1) The chemical substance identified as 2-Piperdinone, 1,3-dimethyl-, (PMN P–97–520 and SNUN 00–397; CAS No. 1690–76–2) is subject to reporting under this section for the significant new uses described in paragraph (a)(2) of this section.

(2) * * *

(i) *Protection in the workplace*. Requirements as specified in § 721.63 (a)(1), (a)(2)(i), (a)(3), (b) (concentration set at 1.0 percent), and (c).

(ii) *Hazard communication program*. Requirements as specified in § 721.72 (a), (b), (c), (d), (e) (concentration set at 1.0 percent), (f), (g)(1)(i), (g)(1)(iii), (g)(1)(iv), (g)(1)(ix), (g)(2)(i), (g)(2)(v), and (g)(5).

(iii) *Industrial, commercial, and consumer activities*. Requirements as specified in § 721.80(k) (use or processing other than: in enclosed systems (such as hydrocarbon extraction, polymer synthesis, wire enamel resin); electronic industry cleaning solvent; and other precision industry cleaning (such as automobile manufacturing, aerospace, and optics)), (o), and (q).

(b) * * *

(1) *Recordkeeping*. The recordkeeping requirements specified in § 721.125 (a), (b), (c), (d), (e), (f), (g), (h), and (i) are applicable to manufacturers, importers, and processors of this substance.

* * * * *

(3) *Determining whether a specific use is subject to this section*. The provisions of § 721.1725(b)(1) apply to this substance.

4. Section 721.6176 is amended as follows:

a. By revising the section heading.

b. By revising paragraphs (a)(1), (a)(2)(i), and (b)(1).

c. By adding paragraphs (a)(2)(ii), (a)(2)(iii), and (b)(3).

§ 721.6176 2-Piperdinone, 1,5-dimethyl-,.

(a) * * * (1) The chemical substance identified as 2-Piperdinone, 1,5-dimethyl-, (PMN P–97–521 and SNUN 00–398; CAS No. 86917–58–0) is subject to reporting under this section for the significant new uses described in paragraph (a)(2) of this section.

(2) * * *

(i) *Protection in the workplace*. Requirements as specified in § 721.63 (a)(1), (a)(2)(i), (a)(3), (b) (concentration set at 1.0 percent), and (c).

(ii) *Hazard communication program*. Requirements as specified in § 721.72 (a), (b), (c), (d), (e) (concentration set at 1.0 percent), (f), (g)(1)(i), (g)(1)(iii), (g)(1)(iv), (g)(1)(ix), (g)(2)(i), (g)(2)(v), and (g)(5).

(iii) *Industrial, commercial, and consumer activities*. Requirements as specified in § 721.80(k) (use or processing other than: in enclosed systems (such as hydrocarbon extraction, polymer synthesis, wire enamel resin); electronic industry cleaning solvent; and other precision industry cleaning (such as automobile manufacturing, aerospace, and optics)), (o), and (q).

(b) * * *

(1) *Recordkeeping*. The recordkeeping requirements specified in § 721.125 (a), (b), (c), (d), (e), (f), (g), (h), and (i) are applicable to manufacturers, importers, and processors of this substance.

* * * * *

(3) *Determining whether a specific use is subject to this section*. The provisions of § 721.1725(b)(1) apply to this substance.

[FR Doc. 02–6726 Filed 3–19–02; 8:45 am]

BILLING CODE 6560–50–S

ENVIRONMENTAL PROTECTION AGENCY

40 CFR Part 721

[OPPTS–50642A; FRL–6819–5]

RIN 2070–AB27

Modification of Significant New Uses of Certain Chemical Substances

AGENCY: Environmental Protection Agency (EPA).

ACTION: Final rule.

SUMMARY: Under section 5(a)(2) of the Toxic Substances Control Act (TSCA) and 40 CFR 721.185, EPA is amending two significant new use rules (SNURs) to allow certain uses without requiring a significant new use notice (SNUN). EPA is amending these rules based on review of new toxicity and exposure data. The amended SNURs would continue to require a SNUN for new uses that may involve significant changes in human or environmental exposure

DATES: This final rule is effective on May 20, 2002.

FOR FURTHER INFORMATION CONTACT: *For general information contact*: Barbara Cunningham, Acting Director, Environmental Assistance Division (7408M), Office of Pollution Prevention and Toxics, Environmental Protection Agency, 1200 Pennsylvania Ave., NW., Washington, DC 20460; telephone number: (202) 554–1404; e-mail address: TSCA-Hotline@epa.gov.

For technical information contact: James Alwood, Chemical Control Division (7405M), Office of Pollution Prevention and Toxics, Environmental Protection Agency, 1200 Pennsylvania Ave., NW., Washington, DC 20460; telephone number: (202) 564–8974; e-mail address: alwood.jim@epa.gov.

SUPPLEMENTARY INFORMATION:

I. General Information

A. Does this Action Apply to Me?

You may be potentially affected by this action if you manufacture, import, process, or use the chemical substances contained in this rule. Potentially

affected categories and entities may include, but are not limited to:

Categories	NAICS codes	Examples of potentially affected entities
Chemical manufacturers	325	Manufacturers, importers, processors, and users of chemicals
Petroleum and coal product industries	324	Manufacturers, importers, processors, and users of chemicals

This listing is not intended to be exhaustive, but rather provides a guide for readers regarding entities likely to be affected by this action. Other types of entities not listed in the table in this unit could also be affected. The North American Industrial Classification System (NAICS) codes have been provided to assist you and others in determining whether or not this action applies to certain entities. To determine whether you or your business is affected by this action, you should carefully examine the applicability provisions in title 40 of the Code of Federal Regulations (CFR) at 40 CFR 721.5. If you have any questions regarding the applicability of this action to a particular entity, consult the technical person listed under **FOR FURTHER INFORMATION CONTACT**.

B. How Can I Get Additional Information, Including Copies of this Document or Other Related Documents?

1. *Electronically*. You may obtain electronic copies of this document, and certain other related documents that might be available electronically, from the EPA Internet Home Page at http://www.epa.gov/. To access this document, on the Home Page select ''Laws and Regulations,'' ''Regulations and Proposed Rules,'' and then look up the entry for this document under the ''**Federal Register**—Environmental Documents.'' You can also go directly to the **Federal Register** listings at http://www.epa.gov/fedrgstr/. A frequently updated electronic version of 40 CFR part 721 is available at http://www.access.gpo.gov/nara/cfr/cfrhtml_00/Title_40/40cfr721_00.html, a beta site currently under development.

2. *In person*. The Agency has established an official record for this action under docket control number OPPTS–50642A. The official record consists of the documents specifically referenced in this action, any public comments received during an applicable comment period, and other information related to this action, including any information claimed as Confidential Business Information (CBI). This official record includes the documents that are physically located in the docket, as well as the documents that are referenced in those documents. The public version of the official record does not include any information claimed as CBI. The public version of the official record, which includes printed, paper versions of any electronic comments submitted during an applicable comment period, is available for inspection in the TSCA Nonconfidential Information Center, North East Mall Rm. B–607, Waterside Mall, 401 M St., SW., Washington, DC. The Center is open from noon to 4 p.m., Monday through Friday, excluding legal holidays. The telephone number for the Center is (202) 260–7099.

II. Background

A. What Action is the Agency Taking?

The Agency proposed the modification of these SNURs in the **Federal Register** of August 16, 2001 (66 FR 42978) (FRL–6557–8). The background and reasons for the modification of each individual SNUR are set forth in the preamble to the proposed SNUR modification. The comment period closed on September 17, 2001. EPA received no comments regarding the SNUR for P–89–769 codified at 721.9480. Therefore EPA is issuing the modified SNUR.

EPA received one comment from the PMN submitter of P–95–4, who provided particle size data that was the basis for the proposed elimination of reporting requirements for respiratory protection when the particle size of the PMN substance is 250 microns or greater. The commenter stated that when the particle size of the substance is 250 microns or greater, exposed workers are not reasonably likely to be exposed to significant amounts of the PMN substance and that SNUR reporting provisions should not apply. EPA reviewed the available dermal toxicity data and determined that when the particle size of the substance is 250 microns or greater dermal exposures would not result in significant changes in human exposure. This determination was based on the fact that the dermal LD_{50} of the substance is greater than 2,000 milligram/kilogram (mg/kg), the skin irritation study in rabbits for the substance showed no skin irritation and had a Draize irritation score of 0, indicative of a compound with no irritation potential to the skin, the skin sensitization study for the substance showed no reactions, and no dermal absorption of particles greater than 250 microns is expected. Therefore, EPA is issuing a modified final SNUR where no SNUR reporting requirements apply when the particle size of the substance is greater than 250 microns.

B. What is the Agency's Authority for Taking this Action?

Section 5(a)(2) of TSCA (15 U.S.C. 2604(a)(2)) authorizes EPA to determine that a use of a chemical substance is a significant new use. EPA must make this determination by rule after considering all relevant factors, including those listed in section 5(a)(2) of TSCA. Once EPA determines that a use of a chemical substance is a significant new use, section 5(a)(1)(B) of TSCA requires persons to submit a notice to EPA at least 90 days before they manufacture, import, or process the substance for that use. The mechanism for reporting under this requirement is established under 40 CFR 721.5.

During review of the PMNs submitted for the chemical substances that are the subject of this rule, EPA concluded that regulation was warranted based on available information that indicated activities not described in the TSCA section 5(e) consent order might result in significant changes in human or environmental exposure as described in section 5(a)(2) of TSCA. Based on these findings, SNURs were promulgated.

EPA has revoked the TSCA section 5(e) consent order for P–89–769 and has determined that modifying these SNURs would not result in significant changes in human or environmental exposure. The modification of SNUR provisions for these substances designated herein is consistent with the provisions of the TSCA section 5(e) consent order.

C. Applicability of General Provisions

General provisions for SNURs appear under subpart A of 40 CFR part 721. These provisions describe persons subject to the rule, recordkeeping requirements, exemptions to reporting requirements, and applicability of the rule to uses occurring before the effective date of the final rule. Provisions relating to user fees appear at 40 CFR part 700. Persons subject to this SNUR must comply with the same notice requirements and EPA regulatory procedures as submitters of PMNs under section 5(a)(1)(A) of TSCA. In particular, these requirements include the information submission requirements of TSCA section 5(b) and 5(d)(1), the exemptions authorized by TSCA section 5 (h)(1), (h)(2), (h)(3), and (h)(5), and the regulations at 40 CFR part 720. Once EPA receives a SNUR notice, EPA may take regulatory action under TSCA section 5(e), 5(f), 6, or 7 to control the

activities on which it has received the SNUR notice. If EPA does not take action, EPA is required under TSCA section 5(g) to explain in the **Federal Register** its reasons for not taking action.

Persons who intend to export a substance identified in a proposed or final SNUR are subject to the export notification provisions of TSCA section 12(b). The regulations that interpret TSCA section 12(b) appear at 40 CFR part 707. Persons who intend to import a chemical substance identified in a final SNUR are subject to the TSCA section 13 import certification requirements, which are codified at 19 CFR 12.118 through 12.127 and 127.28. Such persons must certify that they are in compliance with SNUR requirements. The EPA policy in support of the import certification appears at 40 CFR part 707.

III. Regulatory Assessment Requirements

Under Executive Order 12866, entitled *Regulatory Planning and Review* (58 FR 51735, October 4, 1993), the Office of Management and Budget (OMB) has determined that proposed or final SNURs are not a ''significant regulatory action'' subject to review by OMB, because they do not meet the criteria in section 3(f) of the Executive Order.

Based on EPA's experience with proposing and finalizing SNURs, State, local, and tribal governments have not been impacted by these rulemakings, and EPA does not have any reasons to believe that any State, local, or tribal government will be impacted by this rulemaking. As such, EPA has determined that this regulatory action does not impose any enforceable duty, contain any unfunded mandate, or otherwise have any affect on small governments subject to the requirements of sections 202, 203, 204, or 205 of the Unfunded Mandates Reform Act of 1995 (UMRA) (Public Law 104–4).

This rule does not have tribal implications because it is not expected to have substantial direct effects on Indian Tribes. This rule does not significantly or uniquely affect the communities of Indian tribal governments, nor does it involve or impose any requirements that affect Indian Tribes. Accordingly, the requirements of Executive Order 13175, entitled *Consultation and Coordination with Indian Tribal Governments* (65 FR 67249, November 6, 2000), which took effect on January 6, 2001 do not apply to this rule. Nor will this action have a substantial direct effect on States, on the relationship between the national government and the States, or on the distribution of power and responsibilities among the various levels of government, as specified in Executive Order 13132, entitled *Federalism* (64 FR 43255, August 10, 1999).

In issuing this rule, EPA has taken the necessary steps to eliminate drafting errors and ambiguity, minimize potential litigation, and provide a clear legal standard for affected conduct, as required by section 3 of Executive Order 12988, entitled *Civil Justice Reform* (61 FR 4729, February 7, 1996).

EPA has complied with Executive Order 12630, entitled *Governmental Actions and Interference with Constitutionally Protected Property Rights* (53 FR 8859, March 15, 1988), by examining the takings implications of this rule in accordance with the ''Attorney General's Supplemental Guidelines for the Evaluation of Risk and Avoidance of Unanticipated Takings'' issued under the Executive Order.

This action does not entail special considerations of environmental justice related issues as delineated by Executive Order 12898, entitled *Federal Actions to Address Environmental Justice in Minority Populations and Low-Income Populations* (59 FR 7629, February 16, 1994).

This action is not subject to Executive Order 13045, entitled *Protection of Children from Environmental Health Risks and Safety Risks* (62 FR 19885, April 23, 1997), because this is not an economically significant regulatory action as defined by Executive Order 12866, and this action does not address environmental health or safety risks disproportionately affecting children.

In addition, since this action does not involve any technical standards, section 12(d) of the National Technology Transfer and Advancement Act of 1995 (NTTAA), Public Law 104–113, section 12(d) (15 U.S.C. 272 note), does not apply to this action.

Pursuant to section 605(b) of the Regulatory Flexibility Act (RFA) (5 U.S.C. 601 *et seq.*), the Agency hereby certifies that promulgation of this SNUR will not have a significant adverse economic impact on a substantial number of small entities. The rationale supporting this conclusion is as follows. A SNUR applies to any person (including small or large entities) who intends to engage in any activity described in the rule as a ''significant new use.'' By definition of the word ''new,'' and based on all information currently available to EPA, it appears that no small or large entities presently engage in such activity. Since a SNUR only requires that any person who intends to engage in such activity in the future must first notify EPA by submitting a SNUN, no economic impact will even occur until someone decides to engage in those activities. Although some small entities may decide to conduct such activities in the future, EPA cannot presently determine how many, if any, there may be. However, EPA's experience to date is that, in response to the promulgation of over 530 SNURs, the Agency has received fewer than 15 SNUNs. Of those SNUNs submitted, none appear to be from small entities in response to any SNUR. In addition, the estimated reporting cost for submission of a SNUN are minimal regardless of the size of the firm. Therefore, EPA believes that the potential economic impact of complying with this SNUR are not expected to be significant or adversely impact a substantial number of small entities. In a SNUR that published on June 2, 1997 (62 FR 29684) (FRL–5597–1), the Agency presented it's general determination that proposed and final SNURs are not expected to have a significant economic impact on a substantial number of small entities, which was provided to the Chief Counsel for Advocacy of the Small Business Administration.

According to the Paperwork Reduction Act (PRA), 44 U.S.C. 3501 *et seq.*, an Agency may not conduct or sponsor, and a person is not required to respond to a collection of information that requires OMB approval under the PRA, unless it has been approved by OMB and displays a currently valid OMB control number. The OMB control numbers for EPA's regulations, after initial display in the preamble of the final rule and in addition to its display on any related collection instrument, are listed in 40 CFR part 9.

The information collection requirements related to this action have already been approved by OMB pursuant to the PRA under OMB control number 2070–0012 (EPA ICR No. 574). This action does not impose any burden requiring additional OMB approval. If an entity were to submit a significant new use notice to the Agency, the annual burden is estimated to average between 30 and 170 hours per response. This burden estimate includes the time needed to review instructions, search existing data sources, gather and maintain the data needed, and complete, review and submit the required SNUN.

Send any comments about the accuracy of the burden estimate, and any suggested methods for minimizing respondent burden, including through the use of automated collection

techniques, to the Director, OP Regulatory Information Division (2137), Environmental Protection Agency, 1200 Pennsylvania Ave., NW., Washington, DC 20460. Please remember to include the OMB control number in any correspondence, but do not submit any completed forms to this address.

This rule is not subject to Executive Order 13211, ''*Actions Concerning Regulations That Significantly Affect Energy Supply, Distribution, or Use''* (66 FR 28355, May 22, 2001) because it is not a significant regulatory action under Executive Order 12866.

IV. Submission to Congress and the Comptroller General

The Congressional Review Act, 5 U.S.C. 801 *et seq.*, as added by the Small Business Regulatory Enforcement Fairness Act of 1996, generally provides that before a rule may take effect, the Agency promulgating the rule must submit a rule report, which includes a copy of the rule, to each House of the Congress and the Comptroller General of the United States. EPA will submit a report containing this rule and other required information to the U.S. Senate, the U.S. House of Representatives, and the Comptroller General of the United States prior to publication of the rule in the **Federal Register**. This rule is a ''major rule'' as defined by 5 U.S.C. 804(2).

List of Subjects in 40 CFR Part 721

Environmental protection, Chemicals, Hazardous substances, Reporting and recordkeeping requirements.

Dated: March 1, 2002.

William H. Sanders, III

Office Director, Office of Pollution Prevention and Toxics.

Therefore, 40 CFR part 721 is amended as follows:

PART 721—[AMENDED]

1. The authority citation for part 721 continues to read as follows:

Authority: 15 U.S.C. 2604, 2607, and 2625(c).

2. Section 721.1925 is amended as follows:

a. By revising the section heading.

b. By revising paragraphs (a)(1) and (a)(2)(iii).

c. By removing paragraph (b)(3).

§ 721.1925 Substituted carboheterocyclic butane tetracarboxylate (generic).

(a) * * * (1) The chemical substance identified generically as substituted carboheterocyclic butane tetracarboxylate (PMNs P–90–440 and P–95–4) is subject to reporting under this section for the significant new uses described in paragraph (a)(2) of this section. The requirements of this section do not apply when particle sizes of the chemical substance is greater than 250 microns.

(2) * * *

* * * * *

(iii) *Industrial, commercial, and consumer activities.* Requirements as specified in § 721.80(f).

* * * * *

3. Section 721.9480 is amended as follows:

a. By revising the section heading.

b. By revising paragraphs (a)(1), (a)(2)(i), and (b)(1).

c. By removing and reserving paragraph (a)(2)(ii).

d. By removing paragraphs (a)(2)(iii), (a)(2)(iv), (a)(2)(v), and (b)(3).

§ 721.9480 Resorcinol, formaldehyde substituted carbomonocycle resin (generic).

(a) * * * (1) The chemical substance identified generically as resorcinol, formaldehyde substituted carbomonocycle resin (PMN P–89–769) is subject to reporting under this section for the significant new uses described in paragraph (a)(2) of this section.

(2) * * *

(i) *Release to water.* Requirements as specified in § 721.90 (a)(1), (b)(1), and (c)(1).

(ii) [Reserved]

(b) * * *

(1) *Recordkeeping.* Recordkeeping requirements as specified in § 721.125 (a), (b), (c), and (k) are applicable to manufacturers, importers, and processors of this substance.

* * * * *

[FR Doc. 02–6725 Filed 3–19–02; 8:45 am]

BILLING CODE 6560–50–S

DEPARTMENT OF THE INTERIOR

Office of the Secretary

43 CFR Part 35

RIN 1090–AA80

Change of Address for Office of Hearings and Appeals; Correction

AGENCY: Office of the Secretary, Interior.

ACTION: Final rule; correction.

SUMMARY: In the January 30, 2002, **Federal Register**, the Department of the Interior published a revision to its regulations governing administrative appeals to reflect a change of address for the Office of Hearings and Appeals (OHA). One of the sections for revision was erroneously cited. This document corrects that citation.

DATES: Effective on March 20, 2002.

FOR FURTHER INFORMATION CONTACT: Charles E. Breece, Principal Deputy Director, Office of Hearings and Appeals, 801 North Quincy Street, Arlington, Virginia 22203, telephone 702–235–3810.

SUPPLEMENTARY INFORMATION: The Department of the Interior published a final rule in the **Federal Register** of January 30, 2002, revising several parts of 43 CFR to reflect a change of address for OHA. 67 FR 4367. One of the sections for revision was erroneously cited as 43 CFR 35.1(g). There is no paragraph (g) in § 35.1. The correct citation is 43 CFR 35.2(g).

In rule FR Doc. 02–2188 published on January 30, 2002 (67 FR 4367), make the following correction: On page 4369, in the first column, change the section heading and instruction 25 to read as follows:

§ 35.2 [Amended]

25. In § 35.2(g), revise ''4015 Wilson Boulevard'' to read ''801 North Quincy Street''.

Dated: March 11, 2002.

P. Lynn Scarlett,

Assistant Secretary—Policy, Management and Budget.

[FR Doc. 02–6658 Filed 3–19–02; 8:45 am]

BILLING CODE 4310–RK–M

DEPARTMENT OF COMMERCE

National Oceanic and Atmospheric Administration

50 CFR Part 300

[Docket No. 020131023–2056–02; I.D. 030702B]

RIN 0648–AP80

Pacific Halibut Fisheries; Catch Sharing Plans

AGENCY: National Marine Fisheries Service (NMFS), National Oceanic and Atmospheric Administration (NOAA), Commerce.

ACTION: Temporary final rule; annual management measures for Pacific halibut fisheries and approval of catch sharing plans.

SUMMARY: The Assistant Administrator for Fisheries, NOAA (AA), on behalf of the International Pacific Halibut Commission (IPHC), publishes annual management measures, promulgated as regulations by the IPHC and approved by the Secretary of State, governing the

Pacific halibut fishery. The AA also announces the approval of modifications to the Catch Sharing Plan (CSP) for Area 2A and implementing regulations for 2002. These actions are intended to enhance the conservation of Pacific halibut and further the goals and objectives of the Pacific Fishery Management Council (PFMC) and the North Pacific Fishery Management Council (NPFMC).

DATES: Effective March 18, 2002, through the **Federal Register** publication of the 2003 specification management measures.

ADDRESSES: NMFS Alaska Region, 709 West 9th St., P.O. Box 21668, Juneau, AK 99802–1668 (http://www.fakr.noaa.gov); or NMFS Northwest Region, 7600 Sand Point Way NE, Seattle, WA 98115–0070 (http://www.nwr.noaa.gov).

FOR FURTHER INFORMATION CONTACT: Jay Ginter, 907–586–7228 or Yvonne deReynier, 206–526–6140.

SUPPLEMENTARY INFORMATION:

Background

The IPHC has promulgated regulations governing the Pacific halibut fishery in 2002, under the Convention between the United States and Canada for the Preservation of the Halibut Fishery of the North Pacific Ocean and Bering Sea (Convention), signed at Ottawa, Ontario, on March 2, 1953, as amended by a Protocol Amending the Convention (signed at Washington, D.C., on March 29, 1979). The IPHC regulations have been approved by the Secretary of State of the United States under section 4 of the Northern Pacific Halibut Act (Halibut Act, 16 U.S.C. 773–773k). Pursuant to regulations at 50 CFR 300.62, the approved IPHC regulations setting forth the 2002 IPHC annual management measures are published in the **Federal Register** to provide notice of their effectiveness, and to inform persons subject to the regulations of the restrictions and requirements for harvesting Pacific halibut.

The IPHC held its annual meeting in Seattle, WA, on January 22–25, 2002, and adopted regulations for 2002. The substantive changes to the previous IPHC regulations (66 FR 15801, March 21, 2001) include:

1. New catch limits for all areas;
2. Opening dates for the Area 2A commercial directed halibut fishery;
3. Specification of which commercial fishing regulations apply to the commercial treaty Indian fishery in Area 2A–1;
4. Revision of the definition of illegal possession of halibut such that a person is not required to know that they are in contravention of the IPHC regulations to be in illegal possession of halibut;
5. Allowance of fishing vessels carrying crab pots and operating off Alaska to have halibut heads, skins, bones and entrails on board provided they have documentation of legally acquiring the halibut body parts;
6. Recognition of the customary and traditional use of halibut (i.e. subsistence halibut) in Alaska; and
7. Removal of the expiration date of regulations allowing fishermen using Community Development Quota (CDQ) in Area 4E to retain halibut for personal use that are shorter than the minimum commercial size limit and also extension of this allowance to Area 4D CDQ fishermen.

In addition, this action implements the CSP for regulatory Area 2A. The CSP was developed by the PFMC under authority of the Halibut Act. Section 5 of the Halibut Act (16 U.S.C. 773c) provides the Secretary of Commerce (Secretary) with general responsibility to carry out the Convention and to adopt such regulations as may be necessary to implement the purposes and objectives of the Convention and the Halibut Act. The Secretary's authority has been delegated to the AA. Section 5 of the Halibut Act (16 U.S.C. 773c(c)) also authorizes the Regional Fishery Management Council having authority for the geographic area concerned to develop regulations governing the Pacific halibut catch in United States Convention waters that are in addition to, but not in conflict with, regulations of the IPHC. Pursuant to this authority, NMFS requested the PFMC to allocate halibut catches should such allocation be necessary.

Catch Sharing Plan for Area 2A

The PFMC's Area 2A CSP allocates the halibut catch limit for Area 2A among treaty Indian, non-Indian commercial, and non-Indian sport fisheries in and off Washington, Oregon, and California. Under the CSP, 35 percent of the Area 2A total allowable catch (TAC) is allocated to Washington treaty Indian tribes in Subarea 2A–1, and 65 percent is allocated to non-treaty fisheries in Area 2A. Treaty fisheries are divided into commercial fisheries, and ceremonial and subsistence fisheries. The allocation to non-treaty fisheries is divided into three shares, with the Washington sport fishery (north of the Columbia River) receiving 36.6 percent, the Oregon/California sport fishery receiving 31.7 percent, and the commercial fishery receiving 31.7 percent. The non-treaty commercial allocation is further divided between a directed longline fishery (85 percent) and an incidental catch allowance in the salmon troll fishery (15 percent). The directed commercial fishery in Area 2A is confined to southern Washington (south of 46°53′18'' N. lat.), Oregon and California. North of Point Chehalis, WA (46°53′18'' N. lat.) halibut may be retained by longline vessels participating in the limited entry, primary sablefish fishery. Under applicable regulations, incidental halibut retention in the primary sablefish fishery is only allowable when the overall Area 2A TAC is above 900,000 lb (408.2 mt,) which it is in 2002. The CSP also divides the sport fisheries into seven geographic areas, each with separate allocations, seasons, and bag limits.

For 2002, PFMC recommended changes to the CSP to modify the Pacific halibut sport fisheries in Area 2A in 2002 and beyond pursuant to recommendations from the Washington Department of Fish and Wildlife and the Oregon Department of Fish and Wildlife. These changes to the CSP will separate the Puget Sound sub-area of the Washington State sport fisheries into two regions with two separate season start dates and will allow Oregon anglers to retain up to two halibut on land.

A complete description of the PFMC recommended changes to the CSP, notice of a draft Environmental Assessment and Regulatory Impact Review (EA/RIR), and proposed sport fishery management measures were published in the **Federal Register** on February 11, 2002 (67 FR 6220) with a request for public comments by February 22, 2002. No public comments were received. Therefore, NMFS has approved the changes to the CSP as proposed, made a finding of no significant impact, and finalized the EA/RIR. Copies of the complete CSP for Area 2A as modified and the final EA/RIR are available from the NMFS Northwest Regional Office (see **ADDRESSES**).

In accordance with the CSP, the Washington Department of Fish and Wildlife (WDFW) and the Oregon Department of Fish and Wildlife (ODFW) held public workshops (after the IPHC set the Area 2A quota) in early February 2002, to develop recommendations on the opening dates and weekly structure of the sport fisheries. The WDFW and ODFW sent letters to NMFS discussing the outcome of the workshops and provided the following recommendations on the opening dates and season structure for the sport fisheries.

WDFW recommended a May 9 to July 12 season for eastern Puget Sound and

a May 23 to July 27 season for western Puget Sound, 5 days per week (closed Tuesday and Wednesday). The recommended number of fishing days is based on an analysis of past harvest patterns in this fishery and meets the requirements of the CSP for the overall Puget Sound sport fishery subarea. For the Washington North Coast subarea, WDFW has recommended a season opening May 1 and continuing until the May-June sub-quota is taken, 5 days per week (closed Sunday and Monday), and a second season for July 1–4, with a possibility of re-opening this subarea if sufficient quota remains after July 4. WDFW also recommended extending the southern boundary of the North Coast subarea's closed area by four miles, in accordance with paragraph (f)(1)(ii) of the CSP. This modest increase in the size of the closed area is intended to lengthen the fishing season by reducing access to an area of higher halibut abundance, known as a halibut ''hot spot.'' For the Washington South Coast subarea, WDFW has recommended a season opening May 1 and continuing until the quota is taken, 5 days per week (closed Friday and Saturday) in the offshore area and 7 days per week in the nearshore area. WDFW recommendations for both the North Coast and South Coast Washington subareas meet the requirements of the CSP.

Both WDFW and ODFW have recommended opening the Columbia River subarea on May 1 and continuing the season until the quota has been reached, 7 days per week. This recommended season meets the requirements of the CSP.

ODFW recommended starting the nearshore fishery in the Oregon Central Coast and South Coast subareas on May 1 and continuing the season until the sub-quota for that fishery is taken, 7 days per week. For the all-depth fisheries in those subareas, ODFW recommended a 4–day season of May 10, 11, 17, and 18, based on an analysis of past harvest rates, which indicated an increasing annual trend in this sport fishery. ODFW further recommended a 2 day August all-depth season of August 2 and 3. If the May season does not take the entire May sub-quota for these subareas, ODFW recommended these additional potential opening dates: June 7, 8, 21, 22. If the August season does not take the entire August sub-quota for these subareas, ODFW recommended these additional potential opening dates: August 23, 24, September 20, 21. These recommendations meet the requirements of the CSP for these subareas.

For the southernmost subarea, south of Humbug Mountain, Oregon, ODFW recommended opening this subarea on May 1 and continuing the season until the quota has been reached, 7 days per week. This recommended season meets the requirements of the CSP.

NMFS has implemented sport fishing management measures in Area 2A based on recommendations from the states in accordance with the CSP.

Annual Halibut Management Measures

The annual management measures that follow for the 2002 Pacific halibut fishery are identical to those recommended by the IPHC and approved by the Secretary of State.

2002 Pacific Halibut Fishery Regulations

Regulations Respecting the Convention Between Canada and the United States of America for the Preservation of the Halibut Fishery of the Northern Pacific Ocean and Bering Sea

1. Short Title

These regulations may be cited as the Pacific Halibut Fishery Regulations.

2. Application

(1) These Regulations apply to persons and vessels fishing for halibut in, or possessing halibut taken from the maritime area as defined in Section 3.

(2) Sections 3 to 6 apply generally to all halibut fishing.

(3) Sections 7 to 21 apply to commercial fishing for halibut.

(4) Section 22 applies to the United States treaty Indian fishery in subarea 2A–1.

(5) Section 23 applies to customary and traditional fishing in Alaska.

(6) Section 24 applies to sport fishing for halibut.

(7) These Regulations do not apply to fishing operations authorized or conducted by the Commission for research purposes.

3. Interpretation

(1) In these Regulations,

(a) *Authorized officer* means any State, Federal, or Provincial officer authorized to enforce these regulations including, but not limited to, the National Marine Fisheries Service (NMFS), Canada's Department of Fisheries and Oceans (DFO), Alaska Division of Fish and Wildlife Protection (ADFWP), United States Coast Guard (USCG), Washington Department of Fish and Wildlife (WDFW), and the Oregon State Police (OSP);

(b) *Authorized clearance personnel* means an authorized officer of the United States, a representative of the Commission, or a designated fish processor;

(c) *Charter vessel* means a vessel used for hire in sport fishing for halibut, but not including a vessel without a hired operator;

(d) *Commercial fishing* means fishing, other than treaty Indian ceremonial and subsistence fishing as referred to in section 22, and customary and traditional fishing as referred to in section 23 and defined by and regulated pursuant to National Marine Fisheries Service regulations published at 50 CFR part 300, the resulting catch of which is sold or bartered; or is intended to be sold or bartered;

(e) *Commission* means the International Pacific Halibut Commission;

(f) *Daily bag limit* means the maximum number of halibut a person may take in any calendar day from Convention waters;

(g) *Fishing* means the taking, harvesting, or catching of fish, or any activity that can reasonably be expected to result in the taking, harvesting, or catching of fish, including specifically the deployment of any amount or component part of setline gear anywhere in the maritime area;

(h) *Fishing period limit* means the maximum amount of halibut that may be retained and landed by a vessel during one fishing period;

(i) *Land or Offload with respect to halibut*, means the removal of halibut from the catching vessel;

(j) *License* means a halibut fishing license issued by the Commission pursuant to section 4;

(k) *Maritime area*, in respect of the fisheries jurisdiction of a Contracting Party, includes without distinction areas within and seaward of the territorial sea and internal waters of that Party;

(l) *Operator*, with respect to any vessel, means the owner and/or the master or other individual on board and in charge of that vessel;

(m) *Overall length of a vessel* means the horizontal distance, rounded to the nearest foot, between the foremost part of the stem and the aftermost part of the stern (excluding bowsprits, rudders, outboard motor brackets, and similar fittings or attachments);

(n) *Person* includes an individual, corporation, firm, or association;

(o) *Regulatory area* means an area referred to in section 6;

(p) *Setline gear* means one or more stationary, buoyed, and anchored lines with hooks attached;

(q) *Sport fishing* means all fishing other than commercial fishing, treaty Indian ceremonial and subsistence

fishing as referred to in section 22, and customary and traditional fishing as referred to in section 23 and defined in and regulated pursuant to National Marine fisheries Service regulations published in 50 CFR part 300;

(r) *Tender* means any vessel that buys or obtains fish directly from a catching vessel and transports it to a port of landing or fish processor.

(2) In these Regulations, all bearings are true and all positions are determined by the most recent charts issued by the United States National Ocean Service or the Canadian Hydrographic Service.

(3) In these Regulations all weights shall be computed on the basis that the heads of the fish are off and their entrails removed.

4. Licensing Vessels for Area 2A

(1) No person shall fish for halibut from a vessel, nor possess halibut on board a vessel, used either for commercial fishing or as a charter vessel in Area 2A, unless the Commission has issued a license valid for fishing in Area 2A in respect of that vessel.

(2) A license issued for a vessel operating in Area 2A shall be valid only for operating either as a charter vessel or a commercial vessel, but not both.

(3) A vessel with a valid Area 2A commercial license cannot be used to sport fish for Pacific halibut in Area 2A.

(4) A license issued for a vessel operating in the commercial fishery in Area 2A shall be valid for one of the following, but not both.

(a) The directed commercial fishery during the fishing periods specified in paragraph (2) of section 8 and the incidental commercial fishery during the sablefish fishery specified in paragraph (3) of section 8; or

(b) the incidental catch fishery during the salmon troll fishery specified in paragraph (4) of section 8.

(5) A license issued in respect of a vessel referred to in paragraph (1) of this section must be carried on board that vessel at all times and the vessel operator shall permit its inspection by any authorized officer.

(6) The Commission shall issue a license in respect of a vessel, without fee, from its office in Seattle, Washington, upon receipt of a completed, written, and signed ''Application for Vessel License for the Halibut Fishery'' form.

(7) A vessel operating in the directed commercial fishery or the incidental commercial fishery during the sablefish fishery in Area 2A must have its ''Application for Vessel License for the Halibut Fishery'' form postmarked no later than 11:59 p.m. on April 30, or on the first weekday in May if April 30 is a Saturday or Sunday.

(8) A vessel operating in the incidental commercial fishery during the salmon troll season in Area 2A must have its ''Application for Vessel License for the Halibut Fishery'' form postmarked no later than 11:59 p.m. on March 31, or the first weekday in April if March 31 is a Saturday or Sunday.

(9) Application forms may be obtained from any authorized officer or from the Commission.

(10) Information on ''Application for Vessel License for the Halibut Fishery'' form must be accurate.

(11) The ''Application for Vessel License for the Halibut Fishery'' form shall be completed and signed by the vessel owner.

(12) Licenses issued under this section shall be valid only during the year in which they are issued.

(13) A new license is required for a vessel that is sold, transferred, renamed, or redocumented.

(14) The license required under this section is in addition to any license, however designated, that is required under the laws of the United States or any of its States.

(15) The United States may suspend, revoke, or modify any license issued under this section under policies and procedures in Title 15, CFR part 904.

5. In-Season Actions

(1) The Commission is authorized to establish or modify regulations during the season after determining that such action:

(a) Will not result in exceeding the catch limit established preseason for each regulatory area;

(b) Is consistent with the Convention between the United States of America and Canada for the Preservation of the Halibut Fishery of the Northern Pacific Ocean and Bering Sea, and applicable domestic law of either Canada or the United States; and

(c) Is consistent, to the maximum extent practicable, with any domestic catch sharing plans or other domestic allocation programs developed by the United States or Canadian governments.

(2) In-season actions may include, but are not limited to, establishment or modification of the following:

(a) Closed areas;

(b) Fishing periods;

(c) Fishing period limits;

(d) Gear restrictions;

(e) Recreational bag limits;

(f) Size limits; or

(g) Vessel clearances.

(3) In-season changes will be effective at the time and date specified by the Commission.

(4) The Commission will announce in-season actions under this section by providing notice to major halibut processors; Federal, State, United States treaty Indian, Provincial fishery officials, and the media.

6. Regulatory Areas

The following areas shall be regulatory areas for the purposes of the Convention (see Figure 1):

(1) Area 2A includes all waters off the states of California, Oregon, and Washington;

(2) Area 2B includes all waters off British Columbia;

(3) Area 2C includes all waters off Alaska that are east of a line running 340° true from Cape Spencer Light (58°11′57″N. lat., 136°38′18″W. long.) and south and east of a line running 205° true from said light;

(4) Area 3A includes all waters between Area 2C and a line extending from the most northerly point on Cape Aklek (57°41′15″ N. lat., 155°35′00″ W. long.) to Cape Ikolik (57°17′17″ N. lat., 154°47′18″ W. long.), then along the Kodiak Island coastline to Cape Trinity (56°44′50″ N. lat., 154°08′44″ W. long.), then 140° true;

(5) Area 3B includes all waters between Area 3A and a line extending 150° true from Cape Lutke (54°29′00″ N. lat., 164°20′00″ W. long.) and south of 54°49′00″ N. lat. in Isanotski Strait;

(6) Area 4A includes all waters in the Gulf of Alaska west of Area 3B and in the Bering Sea west of the closed area defined in section 10 that are east of 172°00′00″ W. long. and south of 56°20′00″ N. lat.;

(7) Area 4B includes all waters in the Bering Sea and the Gulf of Alaska west of Area 4A and south of 56°20′00″N. lat.;

(8) Area 4C includes all waters in the Bering Sea north of Area 4A and north of the closed area defined in section 10 which are east of 171°00′00″ W. long., south of 58°00′00″ N. lat., and west of 168°00′00″ W. long.;

(9) Area 4D includes all waters in the Bering Sea north of Areas 4A and 4B, north and west of Area 4C, and west of 168°00′00″ W. long.;

(10) Area 4E includes all waters in the Bering Sea north and east of the closed area defined in section 10, east of 168°00′00″ W. long., and south of 65°34′00″ N. lat..

7. Fishing in Regulatory Area 4E and 4D

(1) Section 7 applies only to any person fishing, or vessel that is used to fish for, Area 4E Community Development Quota (CDQ) or Area 4D CDQ halibut provided that the total annual halibut catch of that person or

vessel is landed at a port within Area 4E or 4D.

(2) A person may retain halibut taken with setline gear in Area 4E CDQ and 4D CDQ fishery that are smaller than the size limit specified in section 13, provided that no person may sell or barter such halibut.

(3) The manager of a CDQ organization that authorizes persons to harvest halibut in the Area 4E or 4D CDQ fisheries must report to the Commission the total number and weight of undersized halibut taken and retained by such persons pursuant to section 7, paragraph (2). This report, which shall include data and methodology used to collect the data, must be received by the Commission prior to December 1 of the year in which such halibut were harvested.

8. Fishing Periods

(1) The fishing periods for each regulatory area apply where the catch limits specified in section 11 have not been taken.

(2) Each fishing period in the Area 2A directed fishery[1] shall begin at 0800 hours and terminate at 1800 hours local time on June 26, July 10, July 24, August 7, August 21, September 4, and September 18 unless the Commission specifies otherwise.

(3) Notwithstanding paragraph (7) of section 11, an incidental catch fishery[2] is authorized during the sablefish seasons in Area 2A in accordance with regulations promulgated by National Marine Fisheries Service (NMFS).

(4) Notwithstanding paragraph (2), and paragraph (7) of section 11, an incidental catch fishery is authorized during salmon troll seasons in Area 2A in accordance with regulations promulgated by the National Marine Fisheries Service (NMFS).

(5) The fishing period in Areas 2B, 2C, 3A, 3B, 4A, 4B, 4C, 4D, and 4E shall begin at 1200 hours local time on March 18 and terminate at 1200 hours local time on November 18, unless the Commission specifies otherwise.

(6) All commercial fishing for halibut in Areas 2A, 2B, 2C, 3A, 3B, 4A, 4B, 4C, 4D, and 4E shall cease at 1200 hours local time on November 18.

9. Closed Periods

(1) No person shall engage in fishing for halibut in any regulatory area other than during the fishing periods set out in section 8 in respect of that area.

(2) No person shall land or otherwise retain halibut caught outside a fishing period applicable to the regulatory area where the halibut was taken.

(3) Subject to paragraphs (7), (8), (9), and (10) of section 19, these Regulations do not prohibit fishing for any species of fish other than halibut during the closed periods.

(4) Notwithstanding paragraph (3), no person shall have halibut in his/her possession while fishing for any other species of fish during the closed periods.

(5) No vessel shall retrieve any halibut fishing gear during a closed period if the vessel has any halibut on board.

(6) A vessel that has no halibut on board may retrieve any halibut fishing gear during the closed period after the operator notifies an authorized officer or representative of the Commission prior to that retrieval.

(7) After retrieval of halibut gear in accordance with paragraph (6), the vessel shall submit to a hold inspection at the discretion of the authorized officer or representative of the Commission.

(8) No person shall retain any halibut caught on gear retrieved referred to in paragraph (6).

(9) No person shall possess halibut aboard a vessel in a regulatory area during a closed period unless that vessel is in continuous transit to or within a port in which that halibut may be lawfully sold.

BILLING CODE 3510–22–S

PACIFIC HALIBUT FISHERY REGULATIONS 2001

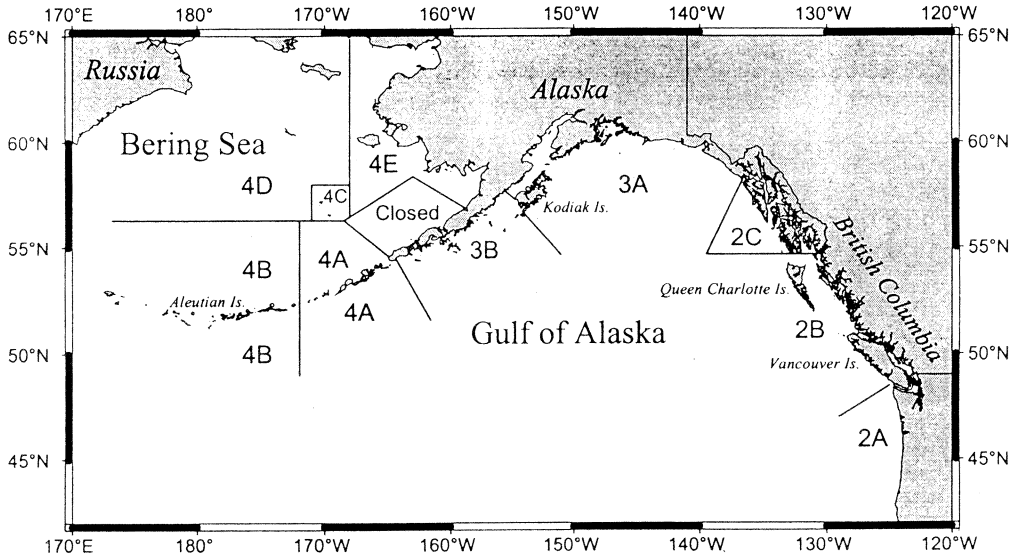

Figure 1. Regulatory areas for the Pacific halibut fishery

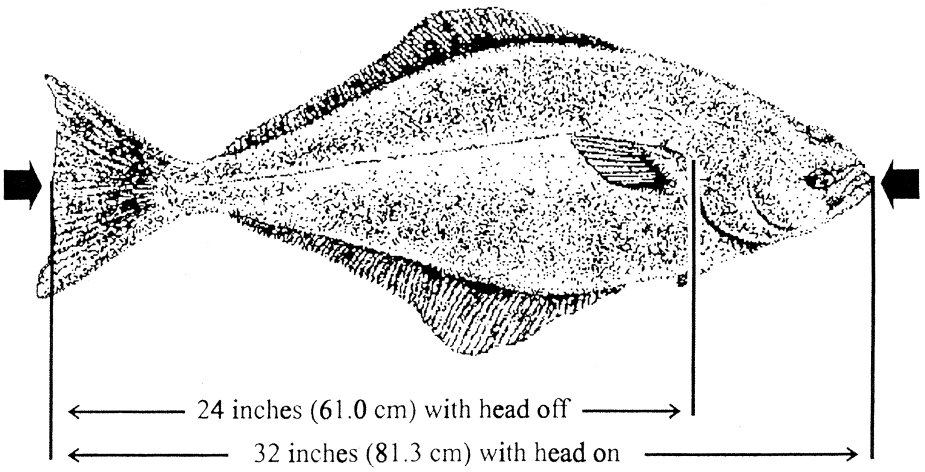

Figure 2. Minimum commercial size

BILLING CODE 3510–22–C

10. Closed Area

All waters in the Bering Sea north of 55°00′00″N. lat. in Isanotski Strait that are enclosed by a line from Cape Sarichef Light (54°36′00″ N. lat., 164°55′42″ W. long.) to a point at 56°20′00″ N. lat., 168°30′00″ W. long.; thence to a point at 58°21′25″ N. lat., 163°00′00″ W. long.; thence to Strogonof Point (56°53′18″ N. lat., 158°50′37″ W. long.); and then along the northern coasts of the Alaska Peninsula and Unimak Island to the point of origin at Cape Sarichef Light are closed to halibut fishing and no person shall fish for halibut therein or have halibut in his/her possession while in those waters except in the course of a continuous transit across those waters. All waters in Isanotski Strait between 55°00′00″N. lat. and 54°49′00″N. lat. are closed to halibut fishing.

11. Catch Limits

(1) The total allowable catch of halibut to be taken during the halibut fishing periods specified in section 8 shall be limited to the weight expressed in pounds or metric tons shown in the following table:

Regulatory Area	Catch Limit in Pounds	Catch Limit in Metric Tons
2A: directed commercial, and incidental commercial during salmon troll fishery	262,000	118.8
2A: incidental commercial during sablefish fishery	88,389	40.1
2B	11,750,000	5,328.8
2C	8,500,000	3,854.9
3A	22,630,000	10,263.0
3B	17,130,000	7,768.7
4A	4,970,000	2,254.0
4B	4,180,000	1,895.7
4C	2,030,000	920.6
4D	2,030,000	920.6
4E	390,000	176.9

(2) Notwithstanding paragraph (1), regulations pertaining to the division of the Area 2A catch limit between the directed commercial fishery and the incidental catch fishery as described in paragraph (4) of section 8 will be promulgated by the National Marine Fisheries Service and published in the **Federal Register**.

(3) The Commission shall determine and announce to the public the date on which the catch limit for Area 2A will be taken.

(4) Notwithstanding paragraph (1), Area 2B will close only when all Individual Vessel Quotas assigned by Canada's Department of Fisheries and Oceans are taken, or November 18, whichever is earlier.

(5) Notwithstanding paragraph (1), Areas 2C, 3A, 3B, 4A, 4B, 4C, 4D, and 4E will each close only when all Individual Fishing Quotas and all Community Development Quotas issued by the National Marine Fisheries Service have been taken, or November 18, whichever is earlier.

(6) If the Commission determines that the catch limit specified for Area 2A in paragraph (1) would be exceeded in an unrestricted 10–hour fishing period as specified in paragraph (2) of section 8, the catch limit for that area shall be considered to have been taken unless fishing period limits are implemented.

(7) When under paragraphs (2), (3), and (6) the Commission has announced a date on which the catch limit for Area 2A will be taken, no person shall fish for halibut in that area after that date for the rest of the year, unless the Commission has announced the reopening of that area for halibut fishing.

12. Fishing Period Limits

(1) It shall be unlawful for any vessel to retain more halibut than authorized by that vessel's license in any fishing period for which the Commission has announced a fishing period limit.

(2) The operator of any vessel that fishes for halibut during a fishing period when fishing period limits are in effect must, upon commencing an offload of halibut to a commercial fish processor, completely offload all halibut on board said vessel to that processor and ensure that all halibut is weighed and reported on State fish tickets.

(3) The operator of any vessel that fishes for halibut during a fishing period when fishing period limits are in effect must, upon commencing an offload of halibut other than to a commercial fish processor, completely offload all halibut on board said vessel and ensure that all halibut are weighed and reported on State fish tickets.

(4) The provisions of paragraph (3) are not intended to prevent retail over-the-side sales to individual purchasers so long as all the halibut on board is ultimately offloaded and reported.

(5) When fishing period limits are in effect, a vessel's maximum retainable catch will be determined by the Commission based on

(a) the vessel's overall length in feet and associated length class;

(b) the average performance of all vessels within that class; and

(c) the remaining catch limit.

(6) Length classes are shown in the following table:

Overall Length	Vessel Class
1–25	A
26–30	B
31–35	C
36–40	D
41–45	E
46–50	F
51–55	G
56+	H

(7) Fishing period limits in Area 2A apply only to the directed halibut fishery referred to in paragraph (2) of section 8.

13. Size Limits

(1)No person shall take or possess any halibut that

(a) with the head on, is less than 32 inches (81.3 cm) as measured in a straight line, passing over the pectoral fin from the tip of the lower jaw with the mouth closed, to the extreme end of the middle of the tail, as illustrated in Figure 2; or

(b) with the head removed, is less than 24 inches (61.0 cm) as measured from the base of the pectoral fin at its most anterior point to the extreme end of the middle of the tail, as illustrated in Figure 2.

(2) No person shall possess on board a vessel a halibut filleted or a halibut that has been mutilated, or otherwise disfigured in any manner that prevents the determination of whether the halibut complies with the size limits specified in this section, except that this paragraph shall not prohibit the possession on board a vessel:

(a) Of halibut cheeks cut from halibut caught by persons authorized to process the halibut on board in accordance with NMFS regulations published at 50 CFR part 679; and

(b) Of fillets from halibut that have been offloaded in accordance with section 17 may be possessed on board a vessel in the port of landing up to 1800 hours local time on the calendar day following the offload.[3]

(3) No person on board a vessel fishing for, or tendering, halibut caught in Area 2A shall possess any halibut that has had its head removed.

14. Careful Release of Halibut

(1) All halibut that are caught and are not retained shall be immediately released outboard of the roller and returned to the sea with a minimum of injury by

(a) hook straightening;

(b) cutting the gangion near the hook; or

(c) carefully removing the hook by twisting it from the halibut with a gaff.

15. Vessel Clearance in Area

(1) The operator of any vessel that fishes for halibut in Areas 4A, 4B, 4C, or 4D must obtain a vessel clearance before fishing in any of these areas, and before the landing of any halibut caught in any of these areas, unless specifically exempted in paragraphs (10), (13), (14), (15), or (16).

(2) An operator obtaining a vessel clearance required by paragraph (1) must obtain the clearance in person from the authorized clearance personnel and sign the IPHC form documenting that a clearance was obtained, except that when the clearance is obtained via VHF radio referred to in paragraphs 5, 8, and 9, the authorized clearance personnel must sign the IPHC form documenting that the clearance was obtained.

(3) The vessel clearance required under paragraph (1) prior to fishing in Area 4A may be obtained only at Nazan Bay on Atka Island, Dutch Harbor or Akutan, Alaska, from an authorized officer of the United States, a representative of the Commission, or a designated fish processor.

(4) The vessel clearance required under paragraph (1) prior to fishing in Area 4B may only be obtained at Nazan Bay on Atka Island or Adak, Alaska, from an authorized officer of the United States, a representative of the Commission, or a designated fish processor.

(5) The vessel clearance required under paragraph (1) prior to fishing in Area 4C or 4D may be obtained only at St. Paul or St. George, Alaska, from an authorized officer of the United States, a representative of the Commission, or a designated fish processor by VHF radio and allowing the person contacted to confirm visually the identity of the vessel.

(6) The vessel operator shall specify the specific regulatory area in which fishing will take place.

(7) Before unloading any halibut caught in Area 4A, a vessel operator may obtain the clearance required under paragraph (1) only in Dutch Harbor or Akutan, Alaska, by contacting an authorized officer of the United States, a representative of the Commission, or a designated fish processor.

(8) Before unloading any halibut caught in Area 4B, a vessel operator may obtain the clearance required under paragraph (1) only in Nazan Bay on Atka Island or Adak, by contacting an authorized officer of the United States, a representative of the Commission, or a designated fish processor by VHF radio or in person.

(9) Before unloading any halibut caught in Area 4C or 4D, a vessel operator may obtain the clearance required under paragraph (1) only in St. Paul, St. George, Dutch Harbor, or Akutan, Alaska, either in person or by contacting an authorized officer of the United States, a representative of the Commission, or a designated fish processor. The clearances obtained in St. Paul or St. George, Alaska, can be obtained by VHF radio and allowing the person contacted to confirm visually the identity of the vessel.

(10) Any vessel operator who complies with the requirements in section 18 for possessing halibut on board a vessel that was caught in more than one regulatory area in Area 4 is exempt from the clearance requirements of paragraph (1) of this section, but must comply with the following requirements:

(a) The operator of the vessel must obtain a vessel clearance prior to fishing in Area 4 in either Dutch Harbor, Akutan, St. Paul, St. George, Adak, or Nazan Bay on Atka Island by contacting an authorized officer of the United States, a representative of the Commission, or a designated fish processor. The clearance obtained in St. Paul, St. George, Adak, or Nazan Bay on Atka Island can be obtained by VHF radio and allowing the person contacted to confirm visually the identity of the vessel. This clearance will list the Areas in which the vessel will fish; and

(b) Before unloading any halibut from Area 4, the vessel operator must obtain a vessel clearance from Dutch Harbor, Akutan, St. Paul, St. George, Adak, or Nazan Bay on Atka Island by contacting an authorized officer of the United States, a representative of the Commission, or a designated fish processor. The clearance obtained in St. Paul or St. George can be obtained by VHF radio and allowing the person contacted to confirm visually the identity of the vessel. The clearance obtained in Adak or Nazan Bay on Atka Island can be obtained by VHF radio.

(11) Vessel clearances shall be obtained between 0600 and 1800 hours, local time.

(12) No halibut shall be on board the vessel at the time of the clearances required prior to fishing in Area 4.

(13) Any vessel that is used to fish for halibut only in Area 4A and lands its total annual halibut catch at a port within Area 4A is exempt from the clearance requirements of paragraph (1).

(14) Any vessel that is used to fish for halibut only in Area 4B and lands its total annual halibut catch at a port within Area 4B is exempt from the clearance requirements of paragraph (1).

(15) Any vessel that is used to fish for halibut only in Area 4C and lands its total annual halibut catch at a port within Area 4C is exempt from the clearance requirements of paragraph (1).

(16) Any vessel that is used to fish for halibut only in Areas 4D or 4E and lands its total annual halibut catch at a port within Areas 4D, 4E, or the closed area defined in section 10, is exempt from the clearance requirements of paragraph (1).

16. Logs

(1) The operator of any U.S. vessel fishing for halibut that has an overall length of 26 feet (7.9 meters) or greater shall maintain an accurate log of halibut fishing operations in the Groundfish/Individual Fishing Quota (IFQ) Daily Fishing Longline and Pot Gear Logbook provided by NMFS, or Alaska hook-and-line logbook provided by Petersburg Vessel Owners Association or Alaska Longline Fisherman's Association, or

[3] DFO has more restrictive regulations therefore section 13(2)b does not apply to fish caught in Area 2B or landed in British Columbia.

the Alaska Department of Fish and Game (ADF&G) longline-pot logbook, or the logbook provided by IPHC.

(2) The logbook referred to in paragraph (1) must include the following information:

(a) The name of the vessel and the state vessel number (ADF&G) or Washington Department of Fish and Wildlife or Oregon Department of Fish and Wildlife or California Department of Fish and Game vessel number);

(b) The date(s) upon which the fishing gear is set or retrieved;

(c) The latitude and longitude or loran coordinates or a direction and distance from a point of land for each set or day;

(d) The number of skates deployed or retrieved, and number of skates lost; and

(e) The total weight or number of halibut retained for each set or day.

(3) The logbook referred to in paragraph (1) shall be

(a) maintained on board the vessel;

(b) updated not later than 24 hours after midnight local time for each day fished and prior to the offloading or sale of halibut taken during that fishing trip;

(c) retained for a period of two years by the owner or operator of the vessel;

(d) open to inspection by an authorized officer or any authorized representative of the Commission upon demand; and

(e) kept on board the vessel when engaged in halibut fishing, during transits to port of landing, and until the offloading of all halibut is completed.

(4) The log referred to in paragraph (1) does not apply to the incidental halibut fishery during the salmon troll season in Area 2A defined in paragraph (4) of section 8.

(5) The operator of any Canadian vessel fishing for halibut shall maintain an accurate log recorded in the British Columbia Halibut Fishery logbook provide by DFO.

(6) The logbook referred to in paragraph (5) must include the following information:

(a) The name of the vessel and the Department of Fisheries and Ocean's vessel number;

(b) The date(s) upon which the fishing gear is set or retrieved;

(c) The latitude and longitude or loran coordinates or a direction and distance from a point of land for each set or day;

(d) The number of skates deployed or retrieved, and number of skates lost; and

(e) The total weight or number of halibut retained for each set or day.

(7) The logbook referred to in paragraph (5) shall be

(a) maintained on board the vessel;

(b) updated not later than 24 hours after midnight local time for each day fished and prior to the offloading or sale of halibut taken during that fishing trip;

(c) retained for a period of two years by the owner or operator of the vessel;

(d) open to inspection by an authorized officer or any authorized representative of the Commission upon demand;

(e) kept on board the vessel when engaged in halibut fishing, during transits to port of landing, and until the offloading of all halibut is completed;

(f) mailed to the Department of Fisheries and Oceans (white copy) within seven days of offloading; and

(g) mailed to the IPHC (yellow copy) within seven days of the final offload if not collected by an International Pacific Halibut Commission employee.

(8) The poundage of any halibut that is not sold, but is utilized by the vessel operator, his/her crew members, or any other person for personal use, shall be recorded in the vessel's log within 24–hours of offloading.

(9) No person shall make a false entry in a log referred to in this section.

17. Receipt and Possession of Halibut

(1) No person shall receive halibut from a United States vessel that does not have on board the license required by section 4.

(2) No person shall offload halibut from a vessel unless the gills and entrails have been removed prior to offloading.

(3) It shall be the responsibility of a vessel operator who lands halibut to continuously and completely offload at a single offload site all halibut on board the vessel.

(4) A registered buyer (as that term is defined in regulations promulgated by the NMFS and codified at 50 CFR part 679) who receives halibut harvested in Individual Fishing Quota (IFQ) and Community Development Quota (CDQ) fisheries in Areas 2C, 3A, 3B, 4A, 4B, 4C, 4D, and 4E, directly from the vessel operator that harvested such halibut must weigh all the halibut received and record the following information on Federal catch reports: date of offload; name of vessel; vessel number; scale weight obtained at the time of offloading, including the weight (in pounds) of halibut purchased by the registered buyer, the weight (in pounds) of halibut offloaded in excess of the IFQ or CDQ, the weight of halibut (in pounds) retained for personal use or for future sale, and the weight (in pounds) of halibut discarded as unfit for human consumption.

(5) The first recipient, commercial fish processor, or buyer in the United States who purchases or receives halibut directly from the vessel operator that harvested such halibut must weigh and record all halibut received and record the following information on state fish tickets: the date of offload, vessel number, total weight obtained at the time of offload including the weight (in pounds) of halibut purchased, the weight (in pounds) of halibut offloaded in excess of the IFQ, CDQ, or fishing period limits, the weight of halibut (in pounds) retained for personal use or for future sale, and the weight (in pounds) of halibut discarded as unfit for human consumption.

(6) The master or operator of a Canadian vessel that was engaged in halibut fishing must weigh and record all halibut on board said vessel at the time offloading commences and record on Provincial fish tickets or Federal catch reports the date, locality, name of vessel, the name(s) of the person(s) from whom the halibut was purchased; and the scale weight obtained at the time of offloading of all halibut on board the vessel including the pounds purchased; pounds in excess of individual vessel quotas; pounds retained for personal use; and pounds discarded as unfit for human consumption.

(7) No person shall make a false entry on a State or Provincial fish ticket or a Federal catch or landing report referred to in paragraphs (4), (5), and (6) of section 17.

(8) A copy of the fish tickets or catch reports referred to in paragraphs (4), (5), and (6) shall be

(a) retained by the person making them for a period of three years from the date the fish tickets or catch reports are made; and

(b) open to inspection by an authorized officer or any authorized representative of the Commission.

(9) No person shall possess any halibut taken or retained in contravention of these Regulations.

(10) When halibut are delivered to other than a commercial fish processor the records required by paragraph (5) shall be maintained by the operator of the vessel from which that halibut was caught, in compliance with paragraph (8).

(11) It shall be unlawful to enter a Halibut Commission license number on a State fish ticket for any vessel other than the vessel actually used in catching the halibut reported thereon.

18. Fishing Multiple Regulatory Areas

(1) Except as provided in this section, no person shall possess at the same time on board a vessel halibut caught in more than one regulatory area.

(2) Halibut caught in Regulatory Areas 2C, 3A, and 3B may be possessed on board a vessel at the same time providing the operator of the vessel:

(a) Has a NMFS-certified observer on board when required by NMFS regulations[4] published at 50 CFR 679.7(f)(4); and

(b) Can identify the regulatory area in which each halibut on board was caught by separating halibut from different areas in the hold, tagging halibut, or by other means.

(3) Halibut caught in Regulatory Areas 4A, 4B, 4C, and 4D may be possessed on board a vessel at the same time providing the operator of the vessel:

(a) Has a NMFS-certified observer on board the vessel when halibut caught in different regulatory areas are on board; and

(b) Can identify the regulatory area in which each halibut on board was caught by separating halibut from different areas in the hold, tagging halibut, or by other means.

(4) Halibut caught in Regulatory Areas 4A, 4B, 4C, and 4D may be possessed on board a vessel when in compliance with paragraph (3) and if halibut from Area 4 are on board the vessel, the vessel can have halibut caught in Regulatory Areas 2C, 3A, and 3B on board if in compliance with paragraph (2).

19. Fishing Gear

(1) No person shall fish for halibut using any gear other than hook and line gear.

(2) No person shall possess halibut taken with any gear other than hook and line gear.

(3) No person shall possess halibut while on board a vessel carrying any trawl nets or fishing pots capable of catching halibut, except that in Areas 2C, 3A, 3B, 4A, 4B, 4C, 4D, or 4E, halibut heads, skin, entrails, bones or fins for use as bait may be possessed on board a vessel carrying pots capable of catching halibut, provided that a receipt documenting purchase or transfer of these halibut parts is on board the vessel.

(4) All setline or skate marker buoys carried on board or used by any United States vessel used for halibut fishing shall be marked with one of the following:

(a) The vessel's name;

(b) The vessel's state license number; or

(c) The vessel's registration number.

(5) The markings specified in paragraph (4) shall be in characters at least four inches in height and one-half inch in width in a contrasting color visible above the water and shall be maintained in legible condition.

(6) All setline or skate marker buoys carried on board or used by a Canadian vessel used for halibut fishing shall be

(a) floating and visible on the surface of the water; and

(b) legibly marked with the identification plate number of the vessel engaged in commercial fishing from which that setline is being operated.

(7) No person on board a vessel from which setline gear was used to fish for any species of fish anywhere in Area 2A during the 72–hour period immediately before the opening of a halibut fishing period shall catch or possess halibut anywhere in those waters during that halibut fishing period.

(8) No vessel from which setline gear was used to fish for any species of fish anywhere in Area 2A during the 72–hour period immediately before the opening of a halibut fishing period may be used to catch or possess halibut anywhere in those waters during that halibut fishing period.

(9) No person on board a vessel from which setline gear was used to fish for any species of fish anywhere in Areas 2B, 2C, 3A, 3B, 4A, 4B, 4C, 4D, or 4E during the 72–hour period immediately before the opening of the halibut fishing season shall catch or possess halibut anywhere in those areas until the vessel has removed all of its setline gear from the water and has either

(a) made a landing and completely offloaded its entire catch of other fish; or

(b) submitted to a hold inspection by an authorized officer.

(10) No vessel from which setline gear was used to fish for any species of fish anywhere in Areas 2B, 2C, 3A, 3B, 4A, 4B, 4C, 4D, or 4E during the 72–hour period immediately before the opening of the halibut fishing season may be used to catch or possess halibut anywhere in those areas until the vessel has removed all of its setline gear from the water and has either

(a) made a landing and completely offloaded its entire catch of other fish; or

(b) submitted to a hold inspection by an authorized officer.

(11) Notwithstanding any other provision in these regulations, a person may retain and possess, but not sell or barter, halibut taken with trawl gear only as authorized by Prohibited Species Donation regulations of the National Marine Fisheries Service.

20. Retention of Tagged Halibut

(1) Nothing contained in these Regulations prohibits any vessel at any time from retaining and landing a halibut that bears a Commission tag at the time of capture, if the halibut with the tag still attached is reported at the time of landing and made available for examination by a representative of the Commission or by an authorized officer.

(2) After examination and removal of the tag by a representative of the Commission or an authorized officer, the halibut:

(a) May be retained for personal use; or

(b) May be sold if it complies with the provisions of section 13.

21. Supervision of Unloading and Weighing

The unloading and weighing of halibut may be subject to the supervision of authorized officers to assure the fulfillment of the provisions of these Regulations.

22. Fishing by United States Treaty Indian Tribes

(1) Halibut fishing in subarea 2A–1 by members of United States treaty Indian tribes located in the State of Washington shall be regulated under regulations promulgated by the National Marine Fisheries Service and published in the **Federal Register**.

(2) Subarea 2A–1 includes all waters off the coast of Washington that are north of 46°53′18″ N. lat. and east of 125°44′00″ W. long., and all inland marine waters of Washington.

(3) Section 13 (size limits), section 14 (careful release of halibut), section 16 (logs), section 17 (receipt and possession of halibut) and section 19 (fishing gear), except paragraphs 7 and 8 of section 19, apply to commercial fishing for halibut in subarea 2A–1 by the treaty Indian tribes.

(3) Commercial fishing for halibut in subarea 2A–1 is permitted with hook and line gear from March 18 through November 18, or until 467,500 pounds (212.0 metric tons) is taken, whichever occurs first.

(4) Ceremonial and subsistence fishing for halibut in subarea 2A–1 is permitted with hook and line gear from January 1 through December 31, and is estimated to take 16,000 pounds (7.3 metric tons).

23. Customary and Traditional Fishing in Alaska

(1) Customary and traditional fishing for halibut in Regulatory Areas 2C, 3A, 3B, 4A, 4B, 4C, 4D, and 4E shall be governed pursuant to regulations promulgated by the National Marine Fisheries Service and published in 50 CFR part 300.

(2) Customary and traditional fishing is authorized from January 1 through December 31.

(3) Section 23 is in effect only when National Marine Fisheries Service publishes subsistence (customary and traditional use) regulations in 50 CFR part 300.

24. Sport Fishing for Halibut

(1) No person shall engage in sport fishing for halibut using gear other than a single line with no more than two hooks attached; or a spear.

(2) In all waters off Alaska:

(a) The sport fishing season is from February 1 to December 31;

(b) The daily bag limit is two halibut of any size per day per person.

(3) In all waters off British Columbia:

(a) The sport fishing season is from February 1 to December 31;

(b) The daily bag limit is two halibut of any size per day per person.

(4) In all waters off California, Oregon, and Washington:

(a) The total allowable catch of halibut shall be limited to

(1) 214,110 pounds (97.1 mt) in waters off Washington and

(2) 262,001 pounds (118.8 mt) in waters off California and Oregon;

(b) The sport fishing subareas, subquotas, fishing dates, and daily bag limits are as follows, except as modified under the inseason actions in Section 24. All sport fishing in Area 2A (except for fish caught in the North Washington coast area and landed into Neah Bay) is managed on a ''port of landing'' basis, whereby any halibut landed into a port counts toward the quota for the area in which that port is located, and the regulations governing the area of landing apply, regardless of the specific area of catch.

(i) In Puget Sound and the U.S. waters in the Strait of Juan de Fuca, east of a line extending from 48°17′30″ N. lat., 124°23′70″ W. long. north to 48°24′70″ N. lat., 124°23′10″ W. long., there is no quota. This area is managed by setting a season that is projected to result in a catch of 57,393 lb (26 mt).

(A) The fishing season in eastern Puget Sound (east of 123°49′30″ W. long.) is May 9 through July 12 and the fishing season in western Puget Sound (west of 123°49′30″ W. long.) is May 23 through July 26, 5 days a week (Thursday through Monday).

(B) The daily bag limit is one halibut of any size per day per person.

(ii) In the area off the north Washington coast, west of the line described in paragraph (4)(b)(i) of this section and north of the Queets River (47°31′42″ N. lat.), the quota for landings into ports in this area is 108,030 lb (49 mt). Landings into Neah Bay of halibut caught in this area will be governed by this paragraph.

(A) The fishing seasons are:

(*1*) Commencing May 1 and continuing 5 days a week (Tuesday through Saturday) until 70,030 lb (31.8 mt) are estimated to have been taken and the season is closed by the Commission, or until June 30, whichever occurs first.

(*2*) From July 1 through July 4, and continuing thereafter for 5 days a week (Tuesday through Saturday) until the overall area quota of 108,030 lb (49 mt) is estimated to have been taken and the area is closed by the Commission, or until September 30, whichever occurs first.

(B) The daily bag limit is one halibut of any size per day per person.

(C) A portion of this area about 19 nm (35 km) southwest of Cape Flattery is closed to sport fishing for halibut. The closed area is within a rectangle defined by these four corners: 48°18′00″ N. lat., 125°11′00″ W. long.; 48°18′00″ N. lat., 124°59′00″ W. long.; 48°00′00″ N. lat., 125°11′00″ W. long.; and, 48°00′00″ N. lat., 124°59′00″ W. long.

(iii) In the area between the Queets River, WA, and Leadbetter Point, WA (46°38′10″ N. lat.), the quota for landings into ports in this area is 42,739 lb (19.4 mt).

(A) The fishing season commences on May 1 and continues 5 days a week (Sunday through Thursday) in all waters, and commences on May 1 and continues 7 days a week in the area from Queets River south to 47°00′00 N. lat. and east of 124°40′00″ W. long., until 42,739 lb (19.4 mt) is estimated to have been taken and the season is closed by the Commission, or until September 30, whichever occurs first.

(B) The daily bag limit is one halibut of any size per day per person.

(iv) In the area between Leadbetter Point, WA, and Cape Falcon, OR (45°46′00″ N. lat.), the quota for landings into ports in this area is 11,188 lb (5.1 mt).

(A) The fishing season commences on May 1, and continues every day through September 30, or until 11,188 lb (5.1 mt) are estimated to have been taken and the area is closed by the Commission, whichever occurs first.

(B) The daily bag limit is the first halibut taken, per person, of 32 inches (81.3 cm) or greater in length.

(v) In the area off Oregon between Cape Falcon and the Siuslaw River at the Florence north jetty (44°01′08″ N. lat.), the quota for landings into ports in this area is 230,639 lb (104.6 mt).

(A) The fishing seasons are:

(*1*) The first season commences May 1 and continues every day through September 30, in the area inside the 30–fathom (55 m) curve nearest to the coastline as plotted on National Ocean Service charts numbered 18520, 18580, and 18600, or until the combined subquotas of the north central and south central inside 30–fathom fisheries (19,797 lb (9.0 mt)) or any inseason revised subquota is estimated to have been taken and the season is closed by the Commission, whichever is earlier.

(*2*) The second season is open on May 10, 11, 17, and 18. The projected catch for this season is 156,835 lb (71.1 mt). If sufficient unharvested catch remains for an additional days fishing, the season will reopen. Dependent on the amount of unharvested catch available, the potential season reopening dates will be: June 7, 8, 21, 22. If a decision is made inseason by NMFS to allow fishing on either of these additional dates, notice of the opening will be announced on the NMFS hotline 206–526–6667 or 800–662–9825. No halibut fishing will be allowed on the additional dates unless the opening date is announced on the NMFS hotline.

(*3*)The third season is open on August 2 and/or 3 or until the combined quotas for the all-depth fisheries in the subareas described in paragraphs (v) and (vi) of this section totaling 229,103 lb (103.9 mt) are estimated to have been taken and the area is closed by the Commission, whichever is earlier. An inseason announcement will be made in mid-July as to whether the fishery will be open on August 2 and/or 3. If the harvest during this opening does not achieve the 229,103 lb (103.9 mt) quota, the season will reopen. Dependent on the amount of unharvested catch available, the potential season reopening dates will be: August 23, 24, September 20, 21. If a decision is made inseason to allow fishing on one or more of these dates, notice of the reopening date will be announced on the NMFS hotline 206–526–6667 or 800–662–9825.

(B) The daily bag limit is the first halibut taken, per person, of 32 inches (81.3 cm) or greater in length.

(vi) In the area off Oregon between the Siuslaw River at the Florence north jetty and Humbug Mountain, Oregon (42°40′30″ N. lat.), the quota for landings into ports in this area is 18,261 lb (8.3 mt).

(A) The fishing seasons are:

(*1*) The first season commences May 1 and continues every day through September 30, in the area inside the 30–fathom (55 m) curve nearest to the coastline as plotted on National Ocean Service charts numbered 18520, 18580, and 18600, or until the combined subquotas of the north central and south central inside 30–fathom fisheries (19,797 lb (9.0 mt)) or any inseason revised subquota is estimated to have been taken and the season is closed by the Commission, whichever is earlier.

(*2*) The second season is open on May 10, 11, 17, and 18. The projected catch for this season is 14,609 lb (6.6 mt). If

sufficient unharvested catch remains for an additional days fishing, the season will reopen. Dependent on the amount of unharvested catch available, the potential season reopening dates will be: June 7, 8, 21, 22. If a decision is made inseason by NMFS to allow fishing on either of these additional dates, notice of the opening will be announced on the NMFS hotline 206–526–6667 or 800–662–9825. No halibut fishing will be allowed on the additional dates unless the opening date is announced on the NMFS hotline.

(*3*) The third season is open on August 2 and/or 3 or until the combined quotas for the all-depth fisheries in the subareas described in paragraphs (v) and (vi) of this section totaling 229,103 lb (103.9 mt) are estimated to have been taken, and the area is closed by the Commission, whichever is earlier. An inseason announcement will be made in mid-July as to whether the fishery will be open on August 2 and/or 3. If the harvest during this opening does not achieve the 229,103 lb (103.9 mt) quota, the season will reopen. Dependent on the amount of unharvested catch available, the potential season reopening dates will be: August 23, 24, September 20, 21. If a decision is made inseason to allow fishing on one or more of these dates, notice of the reopening date will be announced on the NMFS hotline 206–526–6667 or 800–662–9825.

(B) The daily bag limit is the first halibut taken, per person, of 32 inches (81.3 cm) or greater in length.

(vii) In the area south of Humbug Mountain, OR (42°40′30″ N. lat.) and off the California coast, there is no quota. This area is managed on a season that is projected to result in a catch of less than 7,860 lb (3.6 mt).

(A) The fishing season will commence on May 1 and continue every day through September 30.

(B) The daily bag limit is the first halibut taken, per person, of 32 inches (81.3 cm) or greater in length.

(c) The Commission shall determine and announce closing dates to the public for any area in which the subquotas in this Section are estimated to have been taken.

(d) When the Commission has determined that a subquota under paragraph (4)(b) of this section is estimated to have been taken, and has announced a date on which the season will close, no person shall sport fish for halibut in that area after that date for the rest of the year, unless a reopening of that area for sport halibut fishing is scheduled in accordance with the Catch Sharing Plan for Area 2A, or announced by the Commission.

(5) Any minimum overall size limit promulgated under IPHC or NMFS regulations shall be measured in a straight line passing over the pectoral fin from the tip of the lower jaw with the mouth closed, to the extreme end of the middle of the tail.

(6) No person shall fillet, mutilate, or otherwise disfigure a halibut in any manner that prevents the determination of minimum size or the number of fish caught, possessed, or landed.

(7) The possession limit for halibut in the waters off the coast of Alaska is two daily bag limits.

(8) The possession limit for halibut in the waters off the coast of British Columbia is three halibut.

(9) The possession limit for halibut in the waters off Washington, Oregon, and California is the same as the daily bag limit.

(10) The possession limit for halibut on land in Area 2A is two daily bag limits.

(11) Any halibut brought aboard a vessel and not immediately returned to the sea with a minimum of injury will be included in the daily bag limit of the person catching the halibut.

(12) No person shall be in possession of halibut on a vessel while fishing in a closed area.

(13) No halibut caught by sport fishing shall be offered for sale, sold, traded, or bartered.

(14) No halibut caught in sport fishing shall be possessed on board a vessel when other fish or shellfish aboard the said vessel are destined for commercial use, sale, trade, or barter.

(15) The operator of a charter vessel shall be liable for any violations of these regulations committed by a passenger aboard said vessel.

25. Flexible Inseason Management Provisions in Area 2A

(1) The Regional Administrator, NMFS Northwest Region, after consultation with the Chairman of the Pacific Fishery Management Council, the Commission Executive Director, and the Fisheries Director(s) of the affected state(s), is authorized to modify regulations during the season after making the following determinations.

(a) The action is necessary to allow allocation objectives to be met.

(b) The action will not result in exceeding the catch limit for the area.

(c) If any of the sport fishery subareas north of Cape Falcon, OR, are not projected to use their respective quotas by September 30, NMFS may take inseason action to transfer any projected unused quota to a Washington sport subarea projected to have the fewest number of sport fishing days in the calendar year.

(2) Flexible inseason management provisions include, but are not limited to, the following:

(a) Modification of sport fishing periods;

(b) Modification of sport fishing bag limits;

(c) Modification of sport fishing size limits; and

(d) Modification of sport fishing days per calendar week.

(3) Notice procedures.

(a) Actions taken under this section will be published in the **Federal Register**.

(b) Actual notice of inseason management actions will be provided by a telephone hotline administered by the Northwest Region, NMFS, at 206–526–6667 or 800–662–9825 (May through September) and by U.S. Coast Guard broadcasts. These broadcasts are announced on Channel 16 VHF—FM and 2182 kHz at frequent intervals. The announcements designate the channel or frequency over which the notice to mariners will be immediately broadcast. Since provisions of these regulations may be altered by inseason actions, sport fishers should monitor either the telephone hotline or U.S. Coast Guard broadcasts for current information for the area in which they are fishing.

(4) Effective dates.

(a) Any action issued under this section is effective on the date specified in the publication or at the time that the action is filed for public inspection with the Office of the **Federal Register**, whichever is later.

(b) NMFS will invite public comment on any inseason action filed with the Office of the **Federal Register**. If the Regional Administrator determines, for good cause found pursuant to 5 U.S.C. 553(b)(B), that an inseason action must be filed without affording a prior opportunity for public comment, public comments will be received for a period of 15 days after publication of the action in the **Federal Register**.

(c) Any inseason action issued under this section will remain in effect until the stated expiration date or until rescinded, modified, or superseded. However, no inseason action has any effect beyond the end of the calendar year in which it is issued.

(5) Availability of data. The Regional Administrator will compile, in aggregate form, all data and other information relevant to the action being taken and will make them available for public review during normal office hours at the Northwest Regional Office, NMFS, Sustainable Fisheries Division, 7600 Sand Point Way NE, Seattle, WA.

26. Fishery Election in Area 2A

(1) A vessel that fishes in Area 2A may participate in only one of the following three fisheries in Area 2A:

(a) The sport fishery under Section 23;

(b) The commercial directed fishery for halibut during the fishing period(s) established in Section 8 and/or the incidental retention of halibut during the primary sablefish fishery described at 50 CFR 660.323(a)(2); or

(c) The incidental catch fishery during the salmon troll fishery as authorized in Section 8.

(2) No person shall fish for halibut in the sport fishery in Area 2A under Section 23 from a vessel that has been used during the same calendar year for commercial halibut fishing in Area 2A or that has been issued a permit for the same calendar year for the commercial halibut fishery in Area 2A.

(3) No person shall fish for halibut in the directed halibut fishery during the fishing periods established in Section 8 and/or retain halibut incidentally taken in the primary sablefish fishery in Area 2A from a vessel that has been used during the same calendar year for the incidental catch fishery during the salmon troll fishery as authorized in Section 8.

(4) No person shall fish for halibut in the directed commercial halibut fishery and/or retain halibut incidentally taken in the primary sablefish fishery in Area 2A from a vessel that, during the same calendar year, has been used in the sport halibut fishery in Area 2A or that is licensed for the sport charter halibut fishery in Area 2A.

(5) No person shall retain halibut in the salmon troll fishery in Area 2A as authorized under Section 8 taken on a vessel that, during the same calendar year, has been used in the sport halibut fishery in Area 2A, or that is licensed for the sport charter halibut fishery in Area 2A.

(6) No person shall retain halibut in the salmon troll fishery in Area 2A as authorized under Section 8 taken on a vessel that, during the same calendar year, has been used in the directed commercial fishery during the fishing periods established in Section 8 and/or retain halibut incidentally taken in the primary sablefish fishery for Area 2A or that is licensed to participate in these commercial fisheries during the fishing periods established in Section 8 in Area 2A.

27. Previous Regulations Superseded

These regulations shall supersede all previous regulations of the Commission, and these regulations shall be effective each succeeding year until superseded.

Classification

IPHC Regulations

Because approval by the Secretary of State of the IPHC regulations is a foreign affairs function, the notice-and-comment and delay-in-effective date requirements of the Administrative Procedure Act, 5 U.S.C. 553, do not apply to this notice of the effectiveness and content of the IPHC regulations, 5 U.S.C. 553(a)(1). Because prior notice and an opportunity for public comment are not required to be provided for these portions of this rule by 5 U.S.C. 553, or any other law, the analytical requirements of the Regulatory Flexibility Act, 5 U.S.C. 601 *et seq.*, are not applicable.

Catch Sharing Plan for Area 2A

An Environmental Assessment/Regulatory Impact Review was prepared on the proposed changes to the CSP. NMFS has determined that the proposed changes to the CSP and the management measures implementing the CSP contained in these regulations will not significantly affect the quality of the human environment, and the preparation of an environmental impact statement on the final action is not required by section 102(2)(C) of the National Environmental Policy Act or its implementing regulations. At the proposed rule stage, the Chief Counsel for Regulation, Department of Commerce, certified to the Chief Counsel for Advocacy of the Small Business Administration that this action will not have a significant economic impact on a substantial number of small entities. No comments were received on this certification. Consequently, no regulatory flexibility analysis has been prepared. The Assistant Administrator for Fisheries, NOAA, finds that it is contrary to the public interest to delay the effective date of this rule for 30 days. This rule must be made effective for the opening of the 2002 Pacific halibut fishing season on March 18, 2002. NOAA's implementation of changes to the CSP could not begin until after January 2002 when the IPHC passed its annual measures setting quotas for 2002.

This action has been determined to be not significant for purposes of E.O. 12866.

Authority: 16 U.S.C. 773–773k.

Dated: March 13, 2002.

Rebecca Lent,

Deputy Assistant Administrator for Regulatory Programs, National Marine Fisheries Service.

[FR Doc. 02–6567 Filed 3–15–02; 10:57 am]

BILLING CODE 3510–22–S

Rules and Regulations

Federal Register
Vol. 67, No. 54
Wednesday, March 20, 2002

This section of the FEDERAL REGISTER contains regulatory documents having general applicability and legal effect, most of which are keyed to and codified in the Code of Federal Regulations, which is published under 50 titles pursuant to 44 U.S.C. 1510.

The Code of Federal Regulations is sold by the Superintendent of Documents. Prices of new books are listed in the first FEDERAL REGISTER issue of each week.

DEPARTMENT OF AGRICULTURE

Commodity Credit Corporation

7 CFR Part 1464

RIN 0560–AG61

Tobacco Loss Assistance Program 2001

AGENCY: Commodity Credit Corporation.

ACTION: Final rule.

SUMMARY: This final rule implements agricultural market assistance provisions of the Agriculture, Rural Development, Food and Drug Administration, and Related Agencies Appropriations Act, 2002, that relate to tobacco. This rule will mitigate the reduction in the tobacco quotas of the eligible producers.

DATES: Effective March 1, 2002.

FOR FURTHER INFORMATION CONTACT: Ann Wortham, Agricultural Program Specialist, Tobacco Branch, FSA, USDA, STOP 0514, 1400 Independence Avenue, SW, Washington, DC 20250–0540, Telephone: (202) 720–2715.

SUPPLEMENTARY INFORMATION:

Notice and Comment

Section 774 of Pub. L. 107–76 requires that the regulations necessary to implement Title VIII, Subtitle A of Pub. L. 107–76 be issued as soon as practicable and without regard to the notice and comment provisions of 5 U.S.C. 553 or the Statement of Policy of the Secretary of Agriculture effective July 24, 1971 (36 FR 13804) relating to notices of proposed rulemaking and public participation in rulemaking. This rule relates to tobacco assistance and implements the provisions of Subtitle A.

Executive Order 12866

This final rule is issued in conformance with Executive Order 12866 and has been designated as ''not significant.''

The title and number of the Federal assistance program, as found in the Catalog of Federal Domestic Assistance, to which this final rule applies is:

10.452—Disaster Reserve Assistance.

Regulatory Flexibility Act

It has been determined that the Regulatory Flexibility Act is not applicable to this rule because the United States Department of Agriculture (USDA) is not required by 5 U.S.C. 553 or any other provision of law to publish a notice of proposed rulemaking with respect to the subject matter of this rule.

Environmental Evaluation

It has been determined by an environmental evaluation that this action will have no significant impact on the quality of the human environment. Therefore, neither an environmental assessment nor an Environmental Impact Statement is needed.

Executive Order 12372

This program is not subject to the provisions of Executive Order 12372, which require intergovernmental consultation with State and local officials. See the notice related to 7 CFR part 3015, subpart V, published at 48 FR 29115 (June 24, 1983).

Unfunded Mandates

This rule contains no Federal mandates under the provisions of Title II of the Unfunded Mandates Reform Act of 1995 (UMRA) for State, local and tribal governments or the private sector. Therefore this rule is not subject to the requirements of sections 202 and 205 of the UMRA.

Paperwork Reduction Act

This rule does not impact the information collection requirements of 7 CFR 1464 approved by OMB and assigned OMB control numbers 0560–0047 and 0560–0076.

Discussion of Final Rule

This Final Rule will implement requirements of the Agriculture, Rural Development, Food and Drug Administration, and Related Agencies Appropriations Act 2002 (Pub. L. 107–76), which relate to agricultural market assistance for agricultural producers. Section 774 of Pub. L. 107–76 authorizes the Secretary of Agriculture (the Secretary) to use funds of the Commodity Credit Corporation (CCC) to make payments to eligible persons who own, control or grow tobacco on a farm for which a basic quota or allotment for eligible tobacco was established for the 2001 crop year under part I of subtitle B of title III of the Agricultural Adjustment Act of 1938. This eligibility is not affected by temporary transfers or undermarketed tobacco.

Outlays under the programs implemented by this rule will total approximately $5 million. Most tobacco operations are small family-owned affairs and to the extent that the $5 million payment to producers and quota-holders defrays tobacco production costs, the Tobacco Loss Assistance Program 2001 (TLAP01) will enhance their solvency. In the short-term, the cost to the government roughly equals the benefits paid to the producers. In the longer term, to the extent that these disaster payments protect producers from bankruptcy, the payments may stabilize the small farm economy and thereby help achieve the public policy objective of the tobacco program.

A March 1 effective date for this rule was chosen to provide flexibility in the event of a delay in publication of the rule.

List of Subjects in Part 1464

Tobacco Loans, Warehouse Losses, Reporting and record keeping requirements.

Accordingly, Title 7, Part 1464 is amended as follows:

PART 1464—TOBACCO

5. The authority citation for 7 CFR part 1464 continues to read as follows:

Authority: 7 U.S.C. 1421, 1423, 1441, 1445, 1445–1 and 1445–2; 15 U.S.C. 714b, 714c.

6. Add subpart F to read as follows:

Subpart F—Tobacco Loss Assistance Program 2001

Sec.

1464.500 [Reserved]
1464.501 Applicability and basic terms for payment.
1464.502 Administration.
1464.503 Definitions.
1464.504 Eligibility.
1464.505 Signup.
1464.506 [Reserved]
1464.507 Benefits.
1464.508 [Reserved]
1464.509 Offsets and assignments.

1464.510 Misrepresentation and scheme or device.
1464.511 [Reserved]
1464.512 Cumulative liability.
1464.513 Estate, trusts, and minors.
1464.514 Death, incompetence, or disappearance.
1464.515 Appeals.

§ 1464.500 [Reserved]

§ 1464.501 Applicability and basic terms for payment.

(a) This subpart sets forth the terms and conditions of the Tobacco Loss Assistance Program 2001 (TLAP01), authorized by Pub. L. 107–76, which provides that funds of the Commodity Credit Corporation (CCC) be made available to certain persons whose farms had established marketing quotas or allotments for the 2001 crop year.

(b) Subject to the availability of funds, payments for this program shall be divided among eligible persons as follows: 33⅓ percent of the payments will be made to quota owners; 33⅓ percent of the payments will be made to controllers; and 33⅓ percent of the payments will be made to growers.

§ 1464.502 Administration.

(a) This subpart shall be administered by CCC under the general supervision of the Executive Vice President, CCC (Administrator, FSA) and shall be carried out in the field by State and county FSA committees (State and county committees, respectively).

(b) State and county committees, and representatives and employees thereof, do not have the authority to modify or waive any of the provisions of the regulations in this part.

(c) The State committee shall take any action required by these regulations that has not been taken by the county committee. The State committee shall also:

(1) Correct, or require a county committee to correct, an action taken by such county committee that is not in accordance with the regulations of this part.

(2) Require a county committee to withhold taking any action that is not in accordance with the regulations of this part.

(d) No provision or delegation herein to a State or county committee shall preclude the Executive Vice President, CCC, or a designee or the Administrator, FSA, or a designee, from determining any question arising under the program or from reversing or modifying any determination made by a State or county committee.

(e) The Deputy Administrator for Farm Programs, FSA, may authorize State and county committees to waive or modify deadlines and other program requirements in cases where lateness or failure to meet such other requirements does not affect adversely the operation of the program.

§ 1464.503 Definitions.

The definitions set forth in this section shall be applicable for all purposes of administering the Tobacco Loss Assistance Program of this subpart. The terms defined in §§ 718.2 or 723.104 of this title shall also be applicable, except where those definitions conflict with the definitions set forth in this subpart. The following terms shall have the following meanings:

Deputy Administrator means the Deputy Administrator for Farm Programs, Farm Service Agency (FSA), or a designee.

Controller means, taking into account temporary transfers, that person or entity who, as determined by the Deputy Administrator, controls the land used to actually produce the eligible tobacco and shares in the risk of production.

Eligible person means with respect to payments under this part, a person who owns, controls, or grows tobacco on a farm for which a marketing quota or allotment was established under the Agricultural Adjustment Act of 1938 for the 2001 crop year.

Eligible tobacco means each of the following kinds of tobacco: fire-cured tobacco, comprising types 22 and 23; dark air-cured tobacco, comprising types 35 and 36; and Virginia sun-cured tobacco, comprising type 37.

Grower means person(s) or entities who provide labor to produce tobacco and share in the risk of production during the relevant period taking into account temporary transfers.

Payment pounds means the pounds of tobacco for which a person is eligible to be paid under this subpart.

Quota owner means the person or entity who, for the relevant period, owns the land for which a quota is established under the Agricultural Adjustment Act of 1938, as amended, irrespective of temporary transfers or undermarketings.

Share in the risk of production means having a direct financial stake in the success of the crop through a direct share in the actual proceeds from the actual marketing of the crop, which share is conditional upon the success of that marketing. Farm owners who lease their farm land to a tobacco grower for the right to grow tobacco on that land and receive a cash payment for such right, regardless of whether or not a tobacco crop is marketed, are not considered to share in the risk of production. Farm laborers who provide service in exchange for a wage and whose payment is not subject to the marketing of the tobacco crop are not considered to be sharing in the risk of production.

TLAP01 means the Tobacco Loss Assistance Program, for the 2001 crop, which is provided for in this subpart.

§ 1464.504 Eligibility

For a person to be considered an ''eligible person'' under this subpart, such person must own, control, or grow eligible tobacco on a farm with an established ''eligible tobacco'' marketing quota or allotment for the 2001 crop year.

§ 1464.505 Sign up.

(a) Eligible persons who wish to apply for TLAP01 funds, must file an application with the county FSA office by the date established by CCC. However, an application filed late because of hardship may be accepted. Acceptance of such applications must be approved by the Deputy Administrator, subject to the availability of funds.

(b) Data furnished by the applicants will be used to determine eligibility for program benefits. Furnishing the data is voluntary; however, without it program benefits will not be provided.

§ 1464.506 [Reserved]

§ 1464.507 Benefits.

(a) TLAP01 payments shall be made to eligible persons not later than March 31, 2002 as follows:

(1) All fire-cured, dark air-cured and Virginia sun-cured tobacco funds will be distributed one-third to quota owners; one-third to the controller; and one-third to growers.

(2) The allocated funds will be disbursed to quota owners based on the 2001 crop year basic acreage allotment multiplied by National Agricultural Statistics Service (NASS) yield, and to controllers and growers based on the 2001 crop effective allotment multiplied by the yields as specified in the authorizing legislation.

(b) The payment amount for each kind of eligible tobacco shall be equal to 10 cents per eligible payment pound distributed ⅓ to the eligible owner, ⅓ to the eligible controller (if any), and ⅓ to the eligible grower (if any). Persons who fit more than one category can accumulate shares.

(c) In the case where a payment to a farm is disputed CCC may require that all interested parties agree to the resolution of the dispute before any payment is made and may delay

payments to that farm until any such disputes are resolved. Also, so that payments may be made expeditiously in a manner that is administratively efficient, CCC may in its sole discretion exclude payments to a person who does not file a timely claim.

§ 1464.508 [Reserved]

§ 1464.509 Offsets and assignments.

(a) Any payment or portion thereof made to any person under this subpart shall be made without regard to questions of title under State law and without regard to any claim or lien against the related crop, or proceeds thereof. The regulations governing offsets and withholdings found at part 1403 of this chapter shall be applicable to payments made under this part.

(b) Eligible persons may assign TLAP01 payments as provided in part 1404 of this chapter.

§ 1464.510 Misrepresentation and scheme or device.

(a) A producer who erroneously represents any fact affecting a program determination made in accordance with this part shall not be entitled to payments and must refund all payments, plus interest determined in accordance with part 1403 of this chapter.

(b) A producer who is determined to have knowingly:

(1) Adopted any scheme or device that tends to defeat the purpose of the program;

(2) Made any fraudulent representation; or

(3) Misrepresented any fact affecting a program determination, shall refund to CCC all payments received under this subpart, plus interest determined in accordance with part 1403 of this chapter. The subject producer's interest in all applications shall be terminated.

§ 1464.511 [Reserved]

§ 1464.512 Cumulative liability.

The liability of any person for any penalty under this part or for any refund to CCC or related charge arising in connection therewith shall be in addition to any other liability of such person under any civil or criminal fraud statute or any other provision of law including, but not limited to, 18 U.S.C. 286, 287, 371, 641, 1001; 15 U.S.C. 714m; and 31 U.S.C. 3729.

§ 1464.513 Estates, trusts, and minors.

(a) Program documents executed by persons legally authorized to represent estates or trusts will be accepted only if such person furnishes evidence of the authority to execute such documents.

(b) A minor who is a producer shall be eligible for assistance under this subpart only if such person meets one of the following requirements:

(1) The right of majority has been conferred on the minor by court proceedings or by statute;

(2) A guardian has been appointed to manage the minor's property and the applicable program documents are executed by the guardian; or

(3) A bond is furnished under which the surety guarantees any loss incurred for which the minor would be liable had the minor been an adult.

§ 1464.514 Death, incompetence, or disappearance.

In the case of death, incompetence, or disappearance, of any person who is eligible to receive assistance in accordance with this part, such person or persons specified in part 707 of this title may receive such assistance.

§ 1464.515 Appeals.

The appeal, reconsideration, or review of determinations made under this part must be in accordance with parts 11 and 780 of this title. The eligibility provisions for kinds of tobacco under this subpart are not subject to appeal rights.

Signed at Washington, DC, on March 8, 2002.

James R. Little,

Executive Vice President, Commodity Credit Corporation.

[FR Doc. 02–6711 Filed 3–18–02; 9:46 am]

BILLING CODE 3410–05–P

DEPARTMENT OF AGRICULTURE

Animal and Plant Health Inspection Service

9 CFR Part 94

[Docket No. 01–131–1]

Change in Disease Status of Finland Because of BSE

AGENCY: Animal and Plant Health Inspection Service, USDA.

ACTION: Interim rule and request for comments.

SUMMARY: We are amending the regulations by adding Finland to the list of regions where bovine spongiform encephalopathy exists because the disease has been detected in a native-born animal in that country. Finland has been listed among the regions that present an undue risk of introducing bovine spongiform encephalopathy into the United States. Therefore, the effect of this action is a continued restriction on the importation of ruminants that have been in Finland and meat, meat products, and certain other products of ruminants that have been in Finland. This action is necessary in order to update the disease status of Finland regarding bovine spongiform encephalopathy.

DATES: This interim rule was effective December 7, 2001. We will consider all comments we receive that are postmarked, delivered, or e-mailed by May 20, 2002.

ADDRESSES: You may submit comments by postal mail/commercial delivery or by e-mail. If you use postal mail/commercial delivery, please send four copies of your comment (an original and three copies) to: Docket No. 01–131–1, Regulatory Analysis and Development, PPD, APHIS, Station 3C71, 4700 River Road Unit 118, Riverdale, MD 20737–1238. Please state that your comment refers to Docket No. 01–131–1. If you use e-mail, address your comment to *regulations@aphis.usda.gov.* Your comment must be contained in the body of your message; do not send attached files. Please include your name and address in your message and ''Docket No. 01–131–1'' on the subject line.

You may read any comments that we receive on this docket in our reading room. The reading room is located in room 1141 of the USDA South Building, 14th Street and Independence Avenue SW., Washington, DC. Normal reading room hours are 8 a.m. to 4:30 p.m., Monday through Friday, except holidays. To be sure someone is there to help you, please call (202) 690–2817 before coming.

APHIS documents published in the **Federal Register**, and related information, including the names of organizations and individuals who have commented on APHIS dockets, are available on the Internet at *http://www.aphis.usda.gov/ppd/rad/webrepor.html.*

FOR FURTHER INFORMATION CONTACT: Dr. Gary Colgrove, Chief Staff Veterinarian, Sanitary Issues Management Staff, National Center for Import and Export, VS, APHIS, 4700 River Road Unit 38, Riverdale, MD 20737–1231; (301) 734–4356.

SUPPLEMENTARY INFORMATION:

Background

The regulations in 9 CFR parts 93, 94, 95, and 96 (referred to below as the regulations) govern the importation of certain animals, birds, poultry, meat, other animal products and byproducts, hay, and straw into the United States in order to prevent the introduction of various animal diseases, including

bovine spongiform encephalopathy (BSE).

BSE is a neurological disease of cattle and is not known to exist in the United States. It appears that BSE is primarily spread through the use of ruminant feed containing protein and other products from ruminants infected with BSE. Therefore, BSE could become established in the United States if materials carrying the BSE agent, such as certain meat, animal products, and animal byproducts from ruminants, are imported into the United States and are fed to ruminants in the United States. BSE could also become established in the United States if ruminants with BSE are imported into the United States.

Sections 94.18, 95.4, and 96.2 of the regulations prohibit or restrict the importation of certain meat and other animal products and byproducts from ruminants that have been in regions in which BSE exists or in which there is an undue risk of introducing BSE into the United States. Paragraph (a)(1) of § 94.18 lists the regions in which BSE exists. Paragraph (a)(2) lists the regions that present an undue risk of introducing BSE into the United States because their import requirements are less restrictive than those that would be acceptable for import into the United States and/or because the regions have inadequate surveillance. Paragraph (b) of § 94.18 prohibits the importation of fresh, frozen, and chilled meat, meat products, and most other edible products of ruminants that have been in any region listed in paragraph (a)(1) or (a)(2). Paragraph (c) of § 94.18 restricts the importation of gelatin derived from ruminants that have been in any of these regions. Section 95.4 prohibits or restricts the importation of certain byproducts from ruminants that have been in any of those regions, and § 96.2 prohibits the importation of casings, except stomach casings, from ruminants that have been in any of these regions. Additionally, the regulations in 9 CFR part 93 pertaining to the importation of live animals provide that the Animal and Plant Health Inspection Service may deny the importation of ruminants from regions where a communicable disease such as BSE exists and from regions that present risks of introducing communicable diseases into the United States (see § 93.404(a)(3)).

Finland has been among the regions listed in § 94.18(a)(2), which are regions that present an undue risk of introducing BSE into the United States. However, on December 7, 2001, a case of BSE was confirmed in a native-born animal in Finland. Therefore, in order to update the disease status of Finland regarding BSE, we are amending the regulations by removing Finland from the list in § 94.18(a)(2) of regions that present an undue risk of introducing BSE into the United States and adding Finland to the list in § 94.18(a)(1) of regions where BSE is known to exist. The effect of this action is a continued restriction on the importation of ruminants that have been in Finland, meat, meat products, and certain other products and byproducts of ruminants that have been in Finland. We are making these amendments effective retroactively to December 7, 2001, which is the date that BSE was confirmed in a native-born animal in Finland.

Emergency Action

This rulemaking is necessary on an emergency basis to update the disease status of Finland regarding BSE. Under these circumstances, the Administrator has determined that prior notice and opportunity for public comment are contrary to the public interest and that there is good cause under 5 U.S.C. 553 for making this rule effective less than 30 days after publication in the **Federal Register**.

We will consider comments we receive during the comment period for this interim rule (see **DATES** above). After the comment period closes, we will publish another document in the **Federal Register**. The document will include a discussion of any comments we receive and any amendments we are making to the rule as a result of the comments.

Executive Order 12866 and Regulatory Flexibility Act

This rule has been reviewed under Executive Order 12866. For this action, the Office of Management and Budget has waived its review process required by Executive Order 12866.

We are amending the regulations by adding Finland to the list of regions where BSE exists because the disease has been detected in a native-born animal in that region. Finland has been listed among the regions that present an undue risk of introducing BSE into the United States. Regardless of which of the two lists a region is on, the same restrictions apply to the importation of ruminants and meat, meat products, and most other products and byproducts of ruminants that have been in the region. Therefore, this action, which is necessary in order to update the disease status of Finland regarding BSE, will not result in any change in the restrictions that apply to the importation of ruminants and meat, meat products, and certain other products and byproducts of ruminants that have been in Finland.

Under these circumstances, the Administrator of the Animal and Plant Health Inspection Service has determined that this action will not have a significant economic impact on a substantial number of small entities.

Executive Order 12988

This rule has been reviewed under Executive Order 12988, Civil Justice Reform. This rule: (1) Preempts all State and local laws and regulations that are inconsistent with this rule; (2) has retroactive effect to December 7, 2001; and (3) does not require administrative proceedings before parties may file suit in court challenging this rule.

Paperwork Reduction Act

This interim rule contains no information collection or recordkeeping requirements under the Paperwork Reduction Act of 1995 (44 U.S.C. 3501 *et seq.*).

List of Subjects in 9 CFR Part 94

Animal diseases, Imports, Livestock, Meat and meat products, Milk, Poultry and poultry products, Reporting and recordkeeping requirements.

Accordingly, we are amending 9 CFR part 94 as follows:

PART 94—RINDERPEST, FOOT-AND-MOUTH DISEASE, FOWL PEST (FOWL PLAGUE), EXOTIC NEWCASTLE DISEASE, AFRICAN SWINE FEVER, HOG CHOLERA, AND BOVINE SPONGIFORM ENCEPHALOPATHY: PROHIBITED AND RESTRICTED IMPORTATIONS

1. The authority citation for part 94 continues to read as follows:

Authority: 7 U.S.C. 450, 7711, 7712, 7713, 7714, 7751, and 7754; 19 U.S.C. 1306; 21 U.S.C. 111, 114a, 134a, 134b, 134c, 134f, 136, and 136a; 31 U.S.C. 9701; 42 U.S.C. 4331 and 4332; 7 CFR 2.22, 2.80, and 371.4.

§ 94.18 [Amended]

2. Section 94.18 is amended as follows:

a. In paragraph (a)(1), by adding, in alphabetical order, the word ''Finland,''.

b. In paragraph (a)(2), by removing the word ''Finland,''.

Done in Washington, DC, this 14th day of March, 2002.

Bobby R. Acord,

Administrator, Animal and Plant Health Inspection Service.

[FR Doc. 02–6692 Filed 3–19–02; 8:45 am]

BILLING CODE 3410–34–U

DEPARTMENT OF AGRICULTURE

Animal and Plant Health Inspection Service

9 CFR Part 94

[Docket No. 02–004–1]

Change in Disease Status of Austria Because of BSE

AGENCY: Animal and Plant Health Inspection Service, USDA.

ACTION: Interim rule and request for comments.

SUMMARY: We are amending the regulations by adding Austria to the list of regions where bovine spongiform encephalopathy exists because the disease has been detected in a native-born animal in that country. Austria has been listed among the regions that present an undue risk of introducing bovine spongiform encephalopathy into the United States. Therefore, the effect of this action is a continued restriction on the importation of ruminants, meat, meat products, and certain other products of ruminants that have been in Austria. This action is necessary in order to update the disease status of Austria regarding bovine spongiform encephalopathy.

DATES: This interim rule was effective December 13, 2001. We will consider all comments we receive that are postmarked, delivered, or e-mailed by May 20, 2002.

ADDRESSES: You may submit comments by postal mail/commercial delivery or by e-mail. If you use postal mail/commercial delivery, please send four copies of your comment (an original and three copies) to: Docket No. 02–004–1, Regulatory Analysis and Development, PPD, APHIS, Station 3C71, 4700 River Road Unit 118, Riverdale, MD 20737–1238. Please state that your comment refers to Docket No. 02–004–1. If you use e-mail, address your comment to *regulations@aphis.usda.gov.* Your comment must be contained in the body of your message; do not send attached files. Please include your name and address in your message and ''Docket No. 02–004–1'' on the subject line.

You may read any comments that we receive on this docket in our reading room. The reading room is located in room 1141 of the USDA South Building, 14th Street and Independence Avenue SW., Washington, DC. Normal reading room hours are 8 a.m. to 4:30 p.m., Monday through Friday, except holidays. To be sure someone is there to help you, please call (202) 690–2817 before coming.

APHIS documents published in the **Federal Register**, and related information, including the names of organizations and individuals who have commented on APHIS dockets, are available on the Internet at *http://www.aphis.usda.gov/ppd/rad/webrepor.html.*

FOR FURTHER INFORMATION CONTACT: Dr. Gary Colgrove, Chief Staff Veterinarian, Sanitary Issues Management Staff, National Center for Import and Export, VS, APHIS, 4700 River Road Unit 38, Riverdale, MD 20737–1231; (301) 734–4356.

SUPPLEMENTARY INFORMATION:

Background

The regulations in 9 CFR parts 93, 94, 95, and 96 (referred to below as the regulations) govern the importation of certain animals, birds, poultry, meat, other animal products and byproducts, hay, and straw into the United States in order to prevent the introduction of various animal diseases, including bovine spongiform encephalopathy (BSE).

BSE is a neurological disease of cattle and is not known to exist in the United States. It appears that BSE is primarily spread through the use of ruminant feed containing protein and other products from ruminants infected with BSE. Therefore, BSE could become established in the United States if materials carrying the BSE agent, such as certain meat, animal products, and animal byproducts from ruminants, were to be imported into the United States and fed to ruminants in the United States. BSE could also become established in the United States if ruminants with BSE were imported into the United States.

Sections 94.18, 95.4, and 96.2 of the regulations prohibit or restrict the importation of certain meat and other animal products and byproducts from ruminants that have been in regions in which BSE exists or in which there is an undue risk of introducing BSE into the United States.

Paragraph (a)(1) of § 94.18 lists the regions in which BSE exists. Paragraph (a)(2) lists the regions that present an undue risk of introducing BSE into the United States because their import requirements are less restrictive than those that would be acceptable for import into the United States and/or because the regions have inadequate surveillance. Paragraph (b) of § 94.18 prohibits the importation of fresh, frozen, and chilled meat, meat products, and most other edible products of ruminants that have been in any region listed in paragraph (a)(1) or (a)(2). Paragraph (c) of § 94.18 restricts the importation of gelatin derived from ruminants that have been in any of these regions. Section 95.4 prohibits or restricts the importation of certain byproducts from ruminants that have been in any of those regions, and § 96.2 prohibits the importation of casings, except stomach casings, from ruminants that have been in any of these regions. Additionally, the regulations in 9 CFR part 93 pertaining to the importation of live animals provide that the Animal and Plant Health Inspection Service may deny the importation of ruminants from regions where a communicable disease such as BSE exists and from regions that present risks of introducing communicable diseases into the United States (see § 93.404(a)(3)).

Austria has been among the regions listed in § 94.18(a)(2), which are regions that present an undue risk of introducing BSE into the United States. However, on December 13, 2001, a case of BSE was confirmed in a native-born animal in Austria. Therefore, in order to update the disease status of Austria regarding BSE, we are amending the regulations by removing Austria from the list in § 94.18(a)(2) of regions that present an undue risk of introducing BSE into the United States and adding Austria to the list in § 94.18(a)(1) of regions where BSE is known to exist. The effect of this action is a continued restriction on the importation of ruminants, meat, meat products, and certain other products and byproducts of ruminants that have been Austria. We are making these amendments effective retroactively to December 13, 2001, which is the date that BSE was confirmed in a native-born animal in Austria.

Emergency Action

This rulemaking is necessary on an emergency basis to update the disease status of Austria regarding BSE. Under these circumstances, the Administrator has determined that prior notice and opportunity for public comment are contrary to the public interest and that there is good cause under 5 U.S.C. 553 for making this rule effective less than 30 days after publication in the **Federal Register**.

We will consider comments we receive during the comment period for this interim rule (see **DATES** above). After the comment period closes, we will publish another document in the **Federal Register**. The document will include a discussion of any comments we receive and any amendments we are making to the rule as a result of the comments.

Executive Order 12866 and Regulatory Flexibility Act

This rule has been reviewed under Executive Order 12866. For this action, the Office of Management and Budget has waived its review process required by Executive Order 12866.

We are amending the regulations by adding Austria to the list of regions where BSE exists because the disease has been detected in a native-born animal in that region. Austria has been listed among the regions that present an undue risk of introducing BSE into the United States. Regardless of which of the two lists a region is on, the same restrictions apply to the importation of ruminants and meat, meat products, and most other products and byproducts of ruminants that have been in the region. Therefore, this action, which is necessary in order to update the disease status of Austria regarding BSE, will not result in any change in the restrictions that apply to the importation of ruminants and meat, meat products, and certain other products and byproducts of ruminants that have been in Austria.

Under these circumstances, the Administrator of the Animal and Plant Health Inspection Service has determined that this action will not have a significant economic impact on a substantial number of small entities.

Executive Order 12988

This rule has been reviewed under Executive Order 12988, Civil Justice Reform. This rule: (1) Preempts all State and local laws and regulations that are inconsistent with this rule; (2) has retroactive effect to December 13, 2001; and (3) does not require administrative proceedings before parties may file suit in court challenging this rule.

Paperwork Reduction Act

This interim rule contains no information collection or recordkeeping requirements under the Paperwork Reduction Act of 1995 (44 U.S.C. 3501 *et seq.*).

List of Subjects in 9 CFR Part 94

Animal diseases, Imports, Livestock, Meat and meat products, Milk, Poultry and poultry products, Reporting and recordkeeping requirements.

Accordingly, we are amending 9 CFR part 94 as follows:

PART 94—RINDERPEST, FOOT-AND-MOUTH DISEASE, FOWL PEST (FOWL PLAGUE), EXOTIC NEWCASTLE DISEASE, AFRICAN SWINE FEVER, HOG CHOLERA, AND BOVINE SPONGIFORM ENCEPHALOPATHY: PROHIBITED AND RESTRICTED IMPORTATIONS

1. The authority citation for part 94 continues to read as follows:

Authority: 7 U.S.C. 450, 7711, 7712, 7713, 7714, 7751, and 7754; 19 U.S.C. 1306; 21 U.S.C. 111, 114a, 134a, 134b, 134c, 134f, 136, and 136a; 31 U.S.C. 9701; 42 U.S.C. 4331 and 4332; 7 CFR 2.22, 2.80, and 371.4.

§ 94.18 [Amended]

2. Section 94.18 is amended as follows:

a. In paragraph (a)(1), by adding, in alphabetical order, the word ''Austria,''.

b. In paragraph (a)(2), by removing the word ''Austria,''.

Done in Washington, DC, this 14th day of March, 2002.

Bobby R. Acord,

Administrator, Animal and Plant Health Inspection Service.

[FR Doc. 02–6693 Filed 3–19–02; 8:45 am]

BILLING CODE 3410–34–U

FEDERAL ELECTION COMMISSION

11 CFR Parts 100, 104, and 109

[Notice 2002–3]

Independent Expenditure Reporting

AGENCY: Federal Election Commission.

ACTION: Final rules and transmittal of regulations to Congress.

SUMMARY: The Federal Election Commission is revising its regulations to implement statutory changes to the deadlines for filing certain reports of independent expenditures. Under the new law, reports of last minute independent expenditures (''24-hour reports'') must be actually received by the Commission or the Secretary of the Senate's office within 24 hours of the time the independent expenditure was made. To assist those who must meet this new reporting deadline, the revised rules allow reports of last minute independent expenditures to be filed by facsimile machine or electronic mail, unless the filer participates in the Commission's electronic filing program. Electronic filers must continue to file all reports of independent expenditures (24-hour reports as well as regularly scheduled reports) using the Commission's electronic filing system. Further information is provided in the supplementary information that follows.

DATES: Further action, including the announcement of an effective date, will be taken after these regulations have been before Congress for 30 legislative days. 2 U.S.C. 438(d). A document announcing the effective date will be published in the **Federal Register**.

FOR FURTHER INFORMATION CONTACT: Ms. Rosemary C. Smith, Assistant General Counsel, or Ms. Cheryl Fowle, Attorney, 999 E Street, NW., Washington, DC 20463, (202) 694–1650 or (800) 424–9530.

SUPPLEMENTARY INFORMATION: The Commission is issuing revised regulations at 11 CFR 100.19, 104.4, 104.5, 104.14, 104.18, 109.1 and 109.2. These revised rules implement Public Law 106–346 (Department of Transportation and Related Agencies Appropriations Act, 2001, 114 Stat. 1356 (2000)), which amended the Federal Election Campaign Act of 1971, 2 U.S.C. 431 *et seq.,* (''the Act'' or ''FECA''). Paragraphs (b) and (c) of 2 U.S.C. 434 require political committees and other persons making independent expenditures to file reports or statements if their independent expenditures exceed $250. In addition, if independent expenditures of $1,000 or more are made less than twenty (20) days but more than twenty-four (24) hours before the day of an election, an additional statement must be filed within 24 hours. Public Law 106–346 required, *inter alia,* the Commission to issue rules requiring that reports of independent expenditures made less than twenty (20) days but more than twenty-four (24) hours before an election (''24-hour reports'') be *received* by the Commission or the Secretary of the Senate, as appropriate,[1] within 24 hours of the time the independent expenditure was made. The statutory change permits those who must file 24-hour reports to do so using facsimile machines or electronic mail, except for those required to file electronically (*see* 11 CFR 104.18). In addition to their 24-hour reports, persons other than political committees may file by fax or e-mail other reports of independent expenditures in accordance with the regular filing schedule (*see* 11 CFR 104.5). Public Law 106–346 also requires the Commission to provide methods of verification of documents (other than requiring a signature on the document) for all purposes, including submission under penalty of perjury. These new filing methods are intended

[1] The Secretary of the United States Senate Office of Public Records is the proper recipient of reports of independent expenditures that either support or oppose only candidates for the United States Senate. 11 CFR 104.4(c)(2).

to speed up disclosure and to provide political committees and other filers with more flexibility in choosing methods of compliance with reporting requirements. The new law requires these methods to be in place for elections occurring after January 1, 2001, subject to regulations to be promulgated by the Commission.

In addition to the amendments regarding independent expenditures, the new law also requires the Commission to amend its regulations to exclude from the definition of ''contribution'' loans that candidates receive from brokerage accounts, lines of credit, or other credit instruments as long as the loans were made under commercially reasonable terms and were from a source that provides such loans in the normal course of business. That topic is being addressed in a separate rulemaking. *See* Notice of Proposed Rulemaking, 65 **Federal Register** 38576 (Wednesday, July 25, 2001).

Before final promulgation of any rules or regulations to carry out the provisions of Title 2 of the United States Code, the Commission transmits the rules or regulations to the Speaker of the House of Representatives and the President of the Senate for a thirty legislative day review period. 2 U.S.C. 438(d). These rules on independent expenditure reporting were transmitted to Congress on March 15, 2002.

Explanation and Justification

The Commission published a Notice of Proposed Rulemaking (''NPRM'') in the **Federal Register** on May 9, 2001, 65 FR 23628 (May 9, 2001). The NPRM contained proposed rules at 11 CFR 100.19, 104.4, 104.5, 104.15, 109.1 and 109.2 regarding, *inter alia,* when 24-hour reports are considered filed, the filing of 24-hour reports by facsimile machine or electronic mail, and a definition of when an independent expenditure is made. Additionally, the NPRM explicitly recognized that authorized committees may file reports of last-minute contributions (48-hour notices) using facsimile machines or the Commission's web site.

The comment period ended on June 8, 2001. The Commission received one written comment from the James Madison Center for Free Speech (''Madison Center'').

Section 100.19 File, filed or filing (2 U.S.C. 434(a))

The Commission's regulations at 11 CFR 100.19 define *file, filed,* and *filing.* The introductory text of this section states that a document is considered filed if it is: (a) Delivered to the appropriate filing office of the appropriate office, (b) sent by registered or certified mail and postmarked by midnight of the prescribed filing date—except for pre-election reports, or (c) electronically filed, and received and validated by the Commission's electronic filing system on or before 11:59 p.m. eastern time on the prescribed filing date. For clarification, the Commission has added a definition of ''document'' which mirrors the definition in the electronic filing regulations (11 CFR 104.18). A document is any report, statement, notice or designation required by the Act to be filed with the Commission or the Secretary of the Senate.

Paragraph (a) of this section states that a document is timely filed upon delivery to the Commission or Secretary of the Senate, as appropriate, by the close of the prescribed filing date. As explained below, revised paragraph (a) clarifies that the definition of ''timely filed'' is different for paper filers and electronic filers.

Under paragraph (b) of section 100.19 of the previous regulations, 24-hour reports were considered timely filed if they were deposited at a Post Office and were postmarked for certified or registered mail within 24 hours of the time the independent expenditure was made. Under Public Law 106–346 and the revised regulations at paragraph (b), 24-hour reports will only be considered timely filed if they are received by the Commission or Secretary of the Senate within 24 hours of the time the expenditure was made. Thus, sending 24-hour reports by mail will no longer be a viable option because it is unlikely that these reports will be received by the Commission within 24 hours of the making of the expenditure.

New paragraph (d) of section 100.19 defines ''timely filed'' with regard to 24-hour reports of independent expenditures. The new paragraph states that such reports are timely filed when they are received by the Commission or the Secretary of the Senate after a disbursement is made, or a debt reportable under 11 CFR 104.11(b) is incurred, for the independent expenditure, but no later than 24 hours from the time the independent expenditure is made. The new paragraph also states that such 24-hour reports may be filed by facsimile machine or electronic mail, in addition to other permissible means of filing (*e.g.,* hand delivery or overnight courier).

New paragraph (e) expressly incorporates the Commission's practice of allowing authorized committees to file their reports of contributions of $1,000 or more made less than twenty (20) days but more than forty-eight (48) hours before the day of an election (48-hour reports) using a fax machine or the Commission's web site. This change does not stem from Pub. L. 106–346. Rather, the Commission has for some time allowed authorized committees (if they are not electronic filers) to file these reports by facsimile machine in addition to other permissible filing methods. *See* Advisory Opinion (''AO'') 1988–32. In the fall of 2000, the Commission began allowing all authorized committees who file with the Commission (including electronic filers) to file 48-hour reports on-line through the Commission's web site. Note that 48-hour reports filed with the Secretary of the Senate cannot be filed using the on-line program at the Commission's web site. They can, however be filed by fax to the Secretary of the Senate. New paragraph (e) of 11 CFR 100.19 specifically incorporates those filing methods in the regulations. The Commission received no comments on this section.

Note that the final rules differ from the rule proposed in the NPRM with regard to the web based filing of 48-hour reports. The proposed rule stated that only those who do not file electronically could use the Web based filing system implemented in the autumn of 2000. The Commission currently allows electronic filers to file 48 hour reports using either the electronic filing program or on the Commission's web site. Thus the final rules allow all authorized committees (including those who participate in the electronic filing program) to file their 48-hour notices using the Commission's web site.

Section 104.4 Independent Expenditures by Political Committees (2 U.S.C. 434(c))

The Commission's regulations at 11 CFR 104.4 set forth the requirements for political committees reporting independent expenditures. Paragraph (b) of this section is being revised in three respects. First, this paragraph is being revised to state that 24-hour reports must be *received* by the appropriate officers (the Commission or Secretary of the Senate) within 24 hours of the time the independent expenditure is made. Such reports were previously timely if they were postmarked as certified or registered mail within 24 hours of the making of the independent expenditure.

Second, to enable filers to meet the new deadline, amended paragraph (b) of section 104.4 permits political committees to file 24-hour reports by facsimile machine or electronic mail, as

long as the filer is not part of the electronic filing program under 11 CFR 104.18.

Third, section 104.4(b) is being modified to make it easier for political committees to certify the independence of the expenditures falling under this paragraph. Schedule E contains a notarized certification under penalty of perjury as to whether the committee's expenditures were ''coordinated'' with any candidate, authorized committee or agent thereof, and, if the independent expenditures were made by a corporation, that the maker is a qualified nonprofit corporation (*see* 11 CFR 114.10). No other campaign finance reports filed with the Commission or the Secretary of the Senate need to be notarized.

Public Law 106–346 at § 502(a) requires the Commission to create methods, other than by requiring a signature on the document, of verifying the independent expenditure certification on 24-hour reports for all purposes, including penalties of perjury. Consequently, the revised regulations allow the 24-hour report filer to verify the report using self-verification. This means that Schedule E no longer needs to be notarized. Instead, the political committee must self-verify the document using either a handwritten signature of the treasurer on a paper document or by typing the treasurer's name on e-mailed documents. The Commission intends to make the appropriate conforming amendments to Schedule E after the promulgation of these rules. This will extend self-verification to all reports of independent expenditures, including those made before the 20th day before the election and those that exceed $250 but are under $1000.

New paragraphs (b) (1) and (2) of 11 CFR 104.4 set forth two methods for verifying 24-hour reports of independent expenditures. Paper reports (*e.g.,* filed by hand delivery or fax machine), must be verified by the filer's signature under the certification of independence. Reports filed by electronic mail must be verified by the filer typing his or her name under the certification.

As an alternative to self-verification, the NPRM sought comments on retaining the notarization requirement for faxed reports and requiring electronic notarizations for e-mailed reports. Additionally, the Commission sought comments on using digital signatures verified by a ''Trusted Third Party'' for e-mailed reports. Digital signatures utilize a Public Key Infrastructure. That structure uses Public and Private Keys to encode a message and to provide a method of positively identifying the sender. The Commission received no comments addressing this topic or offering other possible methods of verification.

The revised regulations remove the notarization requirement for several reasons. First, the statute simply requires verification, not notarization. Second, no other reports filed with the Commission require notarization. Third, the statement that the filer must sign carries the penalty for perjury if falsely made.

The Commission decided not to institute electronic notarization or digital signatures because they, as relatively new technologies, are not widespread enough to ensure access to everyone who might make an independent expenditure. For example, only a handful of states have electronic notarization statutes, effectively leaving citizens of other states without means of verification. Digital signatures must be purchased and, generally, require the purchaser to have a computer on which the private key (a computer generated string of digits) resides. The Commission is concerned that such a requirement would unduly burden the making or reporting of independent expenditures by those who do not have access to these means of verification.

Section 104.5 Filing Dates (2 U.S.C. 434(a)(2))

Section 104.5 sets forth the required filing dates for each type of political committee and other individuals. The Commission is revising paragraph (f) of this section to follow new paragraph (e) of 11 CFR 100.19 discussed above.

Revised paragraph (g) of 11 CFR 104.5 states that 24-hour reports of independent expenditures must be received by the appropriate officers within 24 hours of the making of the independent expenditure. Previously, 24-hour reports were considered timely filed when they were postmarked to be sent by registered or certified mail. This change conforms to the amendments to 11 CFR 100.19 and 104.4(b) discussed above.

The Commission received no comments on the amendments to this section.

Section 104.14 Formal Requirements Regarding Reports and Statements

Under 11 CFR 104.14, reports and statements must be signed. Two conforming amendments are being made to paragraph (a) of this section. First, new paragraph (a)(1) provides that reports or statements of independent expenditures filed by facsimile machine or electronic mail under 11 CFR 104.4(b) or 11 CFR 109.2 must be verified in accordance with those sections. Secondly, new paragraph (a)(2) states that reports, designations or statements filed electronically under 11 CFR 104.18 must follow the signature requirements of 11 CFR 104.18(g). The Commission received no comments on this section.

Section 104.18 Electronic Filing of Reports (2 U.S.C. 432(d) and 434(a)(11))

Under the previous regulations at 11 CFR 104.18(h), those participating in the Commission's electronic filing program (either mandatory or voluntary) were required to file FEC Form 5 or Schedule E electronically accompanied by a paper copy in order to file a notarized document.

Public Law 106–346 does not allow electronic filers to use fax machines or electronic mail to file their independent expenditures reports. In order to afford all electronic filers the ability to comply with the new requirement that 24-hour reports be received by the appropriate office within 24 hours, the Commission is removing Schedule E and FEC Form 5 from the list in paragraph (h) of reports that require a paper follow-up. Instead, the revised rules require those in the electronic filing program to verify all reports of independent expenditures using the same process they use in filing any other report. Paragraph (h) is being reorganized to clarify which paper documents must accompany electronically filed reports, and when those paper copies must be filed.

The Commission's electronic filing software, FECFile, currently creates Schedule E for electronic filing by political committees. The Commission's electronic filing system accepts FEC Form 5 if created by another entity using the Commission's specifications (available on the FEC web site, www.fec.gov), but FECFile does not currently create Form 5. The Commission intends to make FEC Form 5 available in the FECFile software package. Note that this software is available for free from the Commission.

Further, the Commission is adding to the list of electronic filings that require paper follow-up Schedule C–P–1, used by Presidential candidates to report loans and lines of credit from lending institutions. Like Schedule C–1 (used by non-Presidential committees), Schedule C–P–1 requires the lending institution agent's signature.

On July 25, 2001, the Commission published in the **Federal Register** a Notice of Proposed Rulemaking on Brokerage Loans and Lines of Credit (65 FR 38576 (July 25, 2001)) which sought comments on further revisions to 11

CFR 104.18(h). Thus, additional changes to this section may be promulgated at a later time as part of that separate rulemaking.

Section 109.1 Definitions (2 U.S.C. 432(17))

Section 109.1 of the Commission's regulations contains definitions relevant to independent expenditures. Public Law 106–346 and the revised regulations at 11 CFR 100.19(d), 104.4(b), 104.5(g), and 109.2(b) require 24-hour reports to be received by the Commission or the Secretary of the Senate within 24 hours of the time the independent expenditure is made.

The NPRM sought comments on a three-pronged definition of when an independent expenditure is *made* that would apply to all independent expenditures, not just those reported on a 24-hour basis. That definition was taken from the statutory and regulatory definitions of ''independent expenditure'' (2 U.S.C. 431(17) and 11 CFR 100.8(a)(2)) and ''expenditure'' (2 U.S.C. 431(9)(A) and 11 CFR 109.1). Proposed new paragraph (f) of 11 CFR 109.1 stated that an independent expenditure is made at the earliest of three possible times: (1) The date on which a written contract, including a media contract, promise or agreement to make an independent expenditure is executed; (2) the first date on which the communication is printed, broadcast, or otherwise publicly disseminated; or (3) the date on which the person making the independent expenditure pays for it.

The sole commenter on this rulemaking objects to proposed paragraph (f) for several reasons. First, the commenter argues that the definition is a substantive change to the current provisions of the FECA and is, therefore, outside the Commission's regulatory authority. The commenter also asserts that the definition is illogical and that an independent expenditure is not made until the communication is disseminated to the public. Thus, the commenter argues, prong number one of the definition is incorrect.

The Commission believes that a legal basis arguably would exist for the first prong of its definition of ''made''. Language in the FECA states that an ''independent expenditure is an expenditure'' (2 U.S.C. 431(17)). An expenditure includes a ''written contract, promise, or agreement to make an expenditure'' (2 U.S.C. § 431(9)(A)(ii)). Thus, independent expenditures necessarily include written contracts, promises or agreements to make an expenditure for a communication. Nonetheless, here the Commission is called upon to define when an independent expenditure should be considered ''made'' for purposes of reporting. Some practical and policy considerations come into play.

The Commission is dropping from the final rules the first prong of the test (the date on which a written contract, including a media contract, promise or agreement to make an independent expenditure, is executed). This will simplify the reporting rules, address the practical problem of reporting such transactions as independent expenditures and ensure that the relatively detailed rules on reporting debts at 11 CFR 104.11 apply only to political committees. Those latter rules require a debt (which includes a written contract debt) to be reported only if it exceeds $500 or is for any amount that has been outstanding for more than 60 days.

The commenter also objects to the second prong of the proposed rule at 11 CFR 109.1(f)(2), which stated that an independent expenditure would be made ''on the first date on which the communication is printed, broadcast or otherwise publicly disseminated.'' The commenter objects to the word ''printed'' on the grounds that fliers could be printed and sit in a garage for months, and thus not being publicly disseminated. The Commission is changing the word ''printed'' to ''published'' in the final rules to remove any confusion as to when a communication for an independent expenditure is made.

The commenter further objects to what it believes to be a consequence of the revised regulation which would, in some instances, require disclosure before publication of the communication. The commenter expresses concern that this could lead to mischievous interference with communications from opposing campaigns. The commenter argues that such disclosure would allow incumbents the advantage of knowing when independent expenditures have been made on behalf of their opponents, thus giving them the opportunity to convince broadcasters not to run the advertisements in question.

While the Commission does not necessarily agree with the commenter's legal analysis, the Commission is dropping the third prong of the proposed definition. New paragraph (f) of the final regulations states that an independent expenditure is made on the first date on which the communication is published, broadcast or otherwise publicly disseminated. New language in 11 CFR 104.4(b), 104.5(g) and 109.2(b) would, however, allow persons to report an independent expenditure before the underlying communication is publicly disseminated, notwithstanding other regulations (11 CFR 104.11(b) or 104.3(b)) that could fairly be read to require earlier disclosure. The statutory change for 24-hour reports reflects Congressional intent to emphasize and ensure timely disclosure of independent expenditures. Consequently, the final rules will enhance timely disclosure by requiring that independent expenditures be reported after a disbursement is made, or a debt reportable under 11 CFR 104.11(b) is incurred, for an independent expenditure but no later than 24 hours after the time they are first publicly disseminated. Note that independent expenditures that are mailed to their intended audiences are publicly disseminated at the time that they are relinquished to the U.S. Post Office.

Examples for Political Committees

In some situations, a political committee will not make payment or incur a reportable debt before the communication underlying the independent expenditure is publicly disseminated. If the communication is both publicly disseminated and paid for in the same reporting period, then the committee reports the independent expenditure on Schedule E for that reporting period. If the communication is aired in one reporting period (e.g., during the 24-hour reporting period) and payment is made in a later reporting period (e.g., during the post-general election period), then the committee reports the independent expenditure as a memo entry on Schedule E during the reporting period in which the communication is publicly disseminated and reports it again as a positive entry on Schedule E in the reporting period in which payment is made.

In other situations, however, a political committee may pay the production and distributions costs associated with an independent expenditure in one reporting period, but not publicly disseminate it until a later reporting period. In this case, the committee reports the payment as a disbursement on Schedule B for operating expenditures. When, in a subsequent reporting period, the communication is publicly disseminated, the committee files a Schedule E for the independent expenditure referencing the earlier Schedule B transaction. The committee also reports the disbursement for the independent expenditure as a negative entry on Schedule B so the total

disbursements are not inflated. Alternatively, if the committee wishes to disclose the independent expenditure before the communication is publicly disseminated, it could report the independent expenditure on Schedule E for the reporting period in which the payment is made, with no further reporting obligation at the time the communication is disseminated.

Obligations incurred but not yet paid (that are reportable debts), must be reported on Schedule D. When, in a subsequent reporting period, the communication is publicly disseminated, the committee must file a Schedule E referencing the debt on Schedule D. The committee must continue to report the debt on Schedule D (and any payment on it on Schedule E), until the debt is extinguished.

Example 1: Committee A makes a $10,000 payment on October 5 for a newspaper ad urging the defeat of Candidate X, where the ad will run on the 10th day before the November general election (i.e., during the 24 hour reporting period). The committee reports the payment on Schedule B for Operating Expenditures for its pre-general election report. The committee must file a 24-hour report on Schedule E no later than 24 hours after the ad was first published. Further, on its post-general election report, the committee must report the independent expenditure on Schedule E and report the disbursement for the independent expenditure as a negative entry on Schedule B for Operating Expenditures. Alternatively, the committee could report the independent expenditure on Schedule E for its pre-general election report with no further reporting obligation during the 24-hour and post-general reporting periods.

Example 2: In September, Committee B, a quarterly filer, enters a contract, but does not pay, for a mailing containing an independent expenditure supporting candidate X. The cost of the mailing is $450. Because the debt is less than $500, and has been outstanding for less than 60 days, it is not reportable on Schedule D of the committee's third quarter report. The mailing is delivered to a U.S. Post Office on October 5 (during the pre-general reporting period). Committee B reports the independent expenditure on a 12-day pre-general election report as a Memo Schedule E, using October 5 as the date. Payment is made on November 1. No 24-hour report is needed, because the independent expenditure was distributed before the 20 day before the general election. On the post-general election report, Committee B reports the payment as a positive entry on Schedule E and includes a cross-reference to the Memo Schedule E entry on the 12-day pre-general report.

Example 3: Committee C, a monthly filer, contracts in August for airtime to begin on October 31, five days before the November 5 general election. The costs of producing the ads and the airtime will exceed $500, but no payment is actually made during the August, September, or pre-general reporting periods. These amounts are reportable as debts on Schedule D. The ads run from October 31 through November 2. Payment is made on November 1. Committee C files a 24-hour report of independent expenditures on Memo Schedule E to be received by the Commission or the Secretary of the Senate, as appropriate, within 24 hours of the first time the ad ran on October 31. This Memo Schedule E uses October 31 as the date of the independent expenditure and includes the committee's best estimate of the total cost as the amount. (In this case, the exact amount would be known as of November 1.) The committee, on its post-general election report, shows the November 1 payment to extinguish the debt on Schedule D and also reports the independent expenditure payment as a positive disbursement on Schedule E so the line totals on the Detailed Summary Page will be accurate.

Examples for Persons Other Than Political Committees

Persons other than political committees simply report their independent expenditures on FEC Form 5 or by letter (if they are not required to file electronically). If the independent expenditure is first distributed during the 24-hour reporting period (less than 20 days but more than 24 hours before an election), it must be reported no later than 24 hours after the first time the ad is distributed. If the independent expenditure is first publicly disseminated outside the 24-hour reporting period, it must be reported no later than by the end of the regular reporting period during which the ad is first distributed.

Example 4: Mr. Jones takes out a newspaper ad supporting Candidate X. The ad runs October 4th through October 7th in an election year. Mr. Jones must report the independent expenditure no later than 24 hours after the time the ad first runs on October 4th.

Section 109.2 Reporting of Independent Expenditures by Persons Other Than a Political Committee (2 U.S.C. 434(c)).

Section 109.2 of the Commission's regulations requires persons other than political committees to report their independent expenditures on either FEC Form 5 or in a signed statement containing certain information about the person who made the independent expenditure and about the nature of the expenditure itself. Under the previous regulations, regardless of whether the filer reported the independent expenditure on Form 5 or in a signed statement, the report had to be notarized. As discussed in the Explanation and Justification for 11 CFR 104.4 above, the revised regulations no longer require notarization of reports of independent expenditures, but do require filers to self-verify their reports. Accordingly, the introductory text of paragraphs (a) and (a)(1) of section 109.2 is being revised to change the signature requirement on reports of independent expenditures to the verification of reports of independent expenditures. To implement the self-verification, the amendments to 11 CFR 109.2(a)(1)(v) require that persons other than political committees continue to include a prescribed statement of certification as to the independence of the expenditure. The Commission intends to make conforming amendments to FEC Form 5 at a later point.

The NPRM proposed adding new paragraph (a)(1)(vi) to section 109.2 (and renumbering paragraph (a)(1)(vi) as (a)(1)(vii)). Proposed paragraph (a)(1)(vi) would have required those who file a statement instead of FEC Form 5 to certify that the expenditure was not made to finance, disseminate, distribute or republish campaign materials prepared by a candidate or a candidate's agent or authorized committee. This statement is in addition to the statement of independence required in 11 CFR 109.2(a)(1)(v), discussed above. While this ''republication statement'' has long been included in the certification on FEC Form 5 (and on Schedule E, filed by political committees), it has not been required of those who file by letter. The NPRM further noted, that, on the other hand, the statutory certifications required by 2 U.S.C. 434(b)(6)(B)(iii) and (c)(2)(A) do not address distribution of candidate-prepared materials. Consequently, comments were requested on not adding the certification statement to paragraph (a)(1)(vi) and removing that part of the certification from FEC Form 5 and Schedule E. The commenter did not address this issue.

The Commission has decided to remove the ''republication statement'' from FEC Form 5 and Schedule E, and to not include it in revised 11 CFR 109.2. A statement regarding republication of candidate materials is not specifically mentioned in 2 U.S C. 434(b)(6)(B)(iii) or (c)(2). Corresponding changes will be made to FEC Form 5 and Schedule E.

Conforming changes are being made to paragraph (b) of section 109.2 to indicate that 24-hour reports must be received after a disbursement is made for an independent expenditure, but no later than 24 hours from the time the independent expenditure is made.

New paragraph (c) of 11 CFR 109.2 sets forth the acceptable methods of verification for both e-mailed and paper reports. Note that faxed reports are considered to be filed on paper and must contain the certification statement

required by 11 CFR 109.2(a)(i) and new paragraph (a)(vi) followed by the signature of the filer. Electronically mailed reports must contain the certification statements and information required by 11 CFR 109.2(a)(i) through (a)(vii) followed by the typewritten name of the filer. The Commission received no comments on these amendments.

Certification of No Effect Pursuant to 5 U.S.C. 605(b) (Regulatory Flexibility Act)

The Commission certifies that these final rules will not have a significant economic impact on a substantial number of small entities. The basis of this certification is that the Commission is providing most filers with less than $50,000 of activity with additional means of complying with the law, thereby increasing the filers' flexibility by allowing them to choose the most convenient and cost effective filing method. These additional filing methods will likely reduce costs for small entities.

List of Subjects

11 CFR Part 100

Elections.

11 CFR Part 104

Campaign funds, Political committees and parties, Reporting and recordkeeping requirements.

11 CFR Part 109

Elections, Reporting and recordkeeping requirements.

For the reasons set out in the preamble, subchapter A of chapter I of title 11 of the *Code of Federal Regulations* is amended to read as follows:

PART 100—SCOPE AND DEFINITIONS (2 U.S.C. 431)

1. The authority citation for part 100 is revised to read as follows:

Authority: 2 U.S.C. 431, 434(a)(11), 434(c) and 438(a)(8).

2. Section 100.19 is revised to read as follows:

§ 100.19 File, filed or filing (2 U.S.C. 434(a)).

With respect to documents required to be filed under 11 CFR parts 101, 102 104, 105, 107, 108 and 109, and any modifications or amendments thereto, the terms *file, filed*, and *filing* mean one of the actions set forth in paragraphs (a) through (e) of this section. For purposes of this section, document means any report, statement, notice or designation required by the Act to be filed with the Commission or the Secretary of the Senate.

(a) Except for documents electronically filed under paragraph (c) of this section, a document is timely filed upon delivery to the Federal Election Commission, 999 E Street, NW., Washington, DC 20463; or the Secretary of the United States Senate, Office of Public Records, 119 D Street NE., Washington, DC 20510 as required by 11 CFR part 105, by the close of business on the prescribed filing date.

(b) A document other than a 24-hour report of an independent expenditure under 11 CFR 104.4(b) or 109.2(c) is timely filed upon deposit as registered or certified mail in an established U.S. Post Office and postmarked no later than midnight of the day of the filing date, except that pre-election reports so mailed must be postmarked no later than midnight of the fifteenth day before the date of the election. Documents sent by first class mail must be received by the close of business on the prescribed filing date to be timely filed.

(c) For electronic filing purposes, a document is timely filed when it is received and validated by the Federal Election Commission at or before 11:59 p.m., Eastern Standard/Daylight Time, on the filing date.

(d) A 24-hour report of independent expenditures under 11 CFR 104.4(b) or 109.2(c) is timely filed when it is received by the appropriate filing officer as listed in 11 CFR 104.4(c) after a disbursement is made, or, in the case of a political committee, a debt reportable under 11 CFR 104.11(b) is incurred, for an independent expenditure, but no later than 24 hours from the time the independent expenditure was made. In addition to other permissible means of filing, a 24-hour report may be filed using a facsimile machine or by electronic mail if the filer is not required to file electronically in accordance with 11 CFR 104.18.

(e) In addition to other permissible means of filing, authorized committees that are not required to file electronically may file 48-hour notifications of contributions using facsimile machines. All authorized committees that file with the Commission, including electronic filers, may use the Commission's web site's on-line program to file 48-hour notifications of contributions. See 11 CFR 104.5(f).

PART 104—REPORTS BY POLITICAL COMMITTEES (2 U.S.C. 434)

3. The authority citation for part 104 continues to read as follows:

Authority: 2 U.S.C. 431(1), 431(8), 431(9), 432(i), 434, 438(a)(8) and (b) and 439a.

4. Section 104.4 is amended by revising paragraph (b) to read as follows:

§ 104.4 Independent expenditures by political committees (2 U.S.C. 434(c)).

* * * * *

(b) *24-hour reports.* Reports of any independent expenditures aggregating $1,000 or more made after the 20th day, but more than 24 hours, before 12:01 a.m. of the day of the election, shall be received by the appropriate officers listed in paragraph (c) of this section after a disbursement is made, or a debt reportable under 11 CFR 104.11(b) is incurred, for an independent expenditure, but no later than 24 hours after such independent expenditure is made. Such report shall contain the information required by 11 CFR 104.3(b)(3)(vii) indicating whether the independent expenditure is made in support of, or in opposition to, the candidate involved. In addition to other permissible means of filing, a 24-hour report may be filed using a facsimile machine or electronic mail if the filer is not required to file electronically in accordance with 11 CFR 104.18. Such report shall be verified by one of the methods stated in paragraph (b)(1) or (b)(2) of this section. Any report verified under either of these methods shall be treated for all purposes (including penalties for perjury) in the same manner as a document verified by signature.

(1) For reports filed on paper (e.g., by hand delivery, U.S. Mail or facsimile machine), the certification required by 11 CFR 104.3(b)(3)(vii) shall be immediately followed by the handwritten signature of the treasurer of the political committee that made the independent expenditure and who certifies, under penalty of perjury, its independence.

(2) For reports filed by electronic mail, the certification required by 11 CFR 104.3(b)(3)(vii) shall be immediately followed by the typewritten name of the treasurer of the political committee that made the independent expenditure and who certifies, under penalty of perjury, its independence.

* * * * *

5. Section 104.5 is amended by revising paragraphs (f) and (g) to read as follows:

§ 104.5 Filing Dates (2 U.S.C. 434(a)(2)).

* * * * *

(f) *48-hour notification of contributions.* If any contribution of $1,000 or more is received by any

authorized committee of a candidate after the 20th day, but more than 48 hours, before 12:01 a.m. of the day of the election, the principal campaign committee of that candidate shall notify the Commission, the Secretary of the Senate and the Secretary of State, as appropriate, within 48 hours of receipt of the contribution. The notification shall be in writing and shall include the name of the candidate and office sought by the candidate, the identification of the contributor, and the date of receipt and amount of the contribution. The notification shall be filed in accordance with 11 CFR 100.19. The notification shall be in addition to the reporting of these contributions on the post-election report.

(g) *24-hour report of independent expenditures.* Statements disclosing any independent expenditures aggregating $1,000 or more made after the 20th day, but more than 24 hours, before 12:01 a.m. of the day of the election, must be received by the appropriate officers listed in 11 CFR 104.4(c) after a disbursement is made, or in the case of a political committee, a debt reportable under 11 CFR 104.11(b) is incurred, but no later than 24 hours after such independent expenditure is made. Such statement shall contain the information required by 11 CFR 104.3(b)(3)(vii) indicating whether the independent expenditure is made in support of, or in opposition to, the candidate involved.

* * * * *

6. Section 104.14 is amended by revising paragraph (a) to read as follows:

§ 104.14 Formal Requirements Regarding Reports and Statements.

(a) Each individual having the responsibility to file a designation, report or statement required under this subchapter shall sign the original designation, report or statement except that:

(1) Reports or statements of independent expenditures filed by facsimile machine or electronic mail under 11 CFR 104.4(b) or 11 CFR 109.2 must be verified in accordance with those sections; and

(2) Reports, designations, or statements filed electronically under 11 CFR 104.18 must follow the signature requirements of 11 CFR 104.18(g).

* * * * *

7. Section 104.18 is amended by revising paragraph (h) to read as follows:

§ 104.18 Electronic Filing of Reports (2 U.S.C. 432(d) and 434(a)(11)).

* * * * *

(h) *Schedules and forms with special requirements.*

(1) The following are schedules and forms that require the filing of additional documents and that have special signature requirements:

(i) Schedules C–1 and C-P–1, Loans and Lines of Credit From Lending Institutions (see 11 CFR 104.3(d)); and

(ii) Form 8, Debt Settlement Plan (see 11 CFR 116.7(e)).

(2) If a person files a report electronically by submitting a diskette to the Commission and is required to file any of the schedules or forms listed in paragraph (h)(1) of this section, the person shall file a paper copy of the required schedule or form with the electronic submission, or a digitized version as a separate file in the electronic submission, by the close of business on the prescribed filing date.

(3) If a person files a report electronically by uploading the data to the Commission's electronic filing system and is required to file any schedules or forms listed in paragraph (h)(1) of this section, the person shall file a paper copy or a digitized version of the required schedule or form by the close of business on the prescribed filing date.

* * * * *

PART 109—INDEPENDENT EXPENDITURES (2 U.S.C. 431(17), 434(c))

8. The authority for part 109 continues to read as follows:

Authority: 2 U.S.C. 431(17), 434(a)(11) and (c), 438(a)(8), and 441d.

9. Section 109.1 is amended by adding new paragraph (f) to read as follows:

§ 109.1 Definitions (2 U.S.C. 431(17)).

* * * * *

(f) Notwithstanding 11 CFR 100.8(a)(2) and 104.11(b), an independent expenditure is made on the first date on which the communication is published, broadcast or otherwise publicly disseminated. For purposes of this section, a communication that is mailed to its intended audience is publicly disseminated when it is relinquished to the U.S. Postal Service.

10. Section 109.2 is amended by revising the introductory text in paragraphs (a) and (a)(1), by revising paragraphs (a)(1)(v), (a)(2), and (b), and adding new paragraph (c) to read as follows:

§ 109.2 Reporting of independent expenditures by persons other than a political committee (2 U.S.C. 434(c)).

(a) Every person other than a political committee, who makes independent expenditures aggregating in excess of $250 in a calendar year shall file a verified statement or report on FEC Form 5 with the Commission or Secretary of the Senate in accordance with 11 CFR 104.4(c).

(1) If a verified statement is submitted, the statement shall include:

* * * * *

(v) A verified certification under penalty of perjury as to whether such expenditure was made in cooperation, consultation or concert with, or at the request or suggestion of any candidate or any authorized committee or agent thereof; and

* * * * *

(2) Reports or statements filed under this section shall be filed at the end of the reporting period (quarterly, pre-election, post-election, semi-annual or annual) (See 11 CFR 104.5)) during which any independent expenditure which aggregates in excess of $250 is made and in any reporting period thereafter in which additional independent expenditures are made.

(b) Reports of independent expenditures aggregating $1,000 or more made by any person after the twentieth day, but more than 24 hours before 12:01 a.m. of the day of an election must be received by the appropriate officers as listed in paragraph (c) of this section after a disbursement is made for an independent expenditure, but no later than 24 hours after such independent expenditure is made. Such report or statement shall contain the information required by paragraph (a) of this section indicating whether the independent expenditure is made in support of, or in opposition to, a particular candidate.

(c) Verification of independent expenditure statements and reports: For reports filed on paper (e.g., by hand delivery, U.S. Mail or facsimile machine), the certification required by paragraph (a)(1)(v) of this section must be immediately followed by the handwritten signature of the person who made the independent expenditure and who certifies, under penalty of perjury, its independence. For reports filed by electronic mail, the certification required by paragraph (a)(1)(v) of this section must be immediately followed by the typewritten name of the person who made the independent expenditure and who certifies, under penalty of perjury, its independence.

Dated: March 15, 2002.

David. M. Mason,

Chairman, Federal Election Commission.

[FR Doc. 02–6719 Filed 3–19–02; 8:45 am]

BILLING CODE 6715–01–P

FEDERAL HOUSING FINANCE BOARD

12 CFR Chapter IX

[No. 2002–05]

RIN 3069–AB12

Technical Amendments to Federal Housing Finance Board Regulations

AGENCY: Federal Housing Finance Board.

ACTION: Final rule.

SUMMARY: The Federal Housing Finance Board (Finance Board) is making various technical amendments to its regulations in order to complete the reorganization and modernization of the regulations that was begun with the regulatory reorganization rule published in February 2000. This rule will consolidate into one part the definitions of common terms used throughout the regulations; correct mistaken cross-references and other oversights remaining from the reorganization rule; delete obsolete provisions; and make certain changes to better conform to the stylistic conventions of the Code of Federal Regulations. None of the amendments are intended to effect any substantive change to any regulation.

EFFECTIVE DATE: This final rule is effective on March 20, 2002.

FOR FURTHER INFORMATION CONTACT: Arnold Intrater, Acting General Counsel, (202) 408–2536; or Eric Raudenbush, Senior Attorney-Advisor, (202) 408–2932, Office of General Counsel, Federal Housing Finance Board, 1777 F Street, NW., Washington, DC 20006.

SUPPLEMENTARY INFORMATION: On February 18, 2000, the Finance Board published a final rule that reorganized and renumbered the agency's existing regulations, deleted obsolete regulations and made various technical amendments to the reorganized regulations. *See* 65 FR 8253 (Feb. 18, 2000) (Reorganization Rule). The amendments set forth in the Reorganization Rule were intended to implement a more logical, efficient and modern presentation of the regulations governing the Federal Housing Finance Board and Federal Home Loan Bank System, as well as to achieve greater consistency in terminology and greater conformity with current stylistic conventions of the Code of Federal Regulations (CFR).

Because the changes implemented by the Reorganization Rule were so comprehensive, there were a number of mistakes and oversights (*e.g.,* mistaken cross-references and obsolete terminology that was not amended) that remained to be corrected even after the rule became effective. In addition, since the publication of the Reorganization Rule, the Finance Board has completed a number of major rulemakings that have either added substantial amounts of text to its regulations, or significantly altered the text that existed prior to February of 2000. Although these major rulemakings were anticipated and taken into consideration in the drafting of the Reorganization Rule, their subsequent adoption has resulted in the need for some minor technical amendments in order to integrate fully the new material into the streamlined regulatory format. This final rule corrects the mistakes resulting from, and oversights remaining from, the Reorganization Rule and makes changes to integrate recently-adopted major regulations fully and cleanly into the overall structure of the regulations. None of the amendments contained in the rule are intended to effect any substantive change to any regulation.

A significant portion of the amendments set forth in the final rule involve the consolidation of definitions of terms that are used frequently throughout the regulations into part 900, which is the first part that appears in the regulations as codified in the CFR. Prior to the enactment of the Reorganization Rule, there were numerous examples throughout the regulations of terms that were defined many times over in separate parts of the regulations, and of synonymous terms that were variously used to describe the same concept in different parts of the regulations (*e.g.,* ''Finance Board,'' ''Board'' and ''Federal Housing Finance Board'' were used in different parts of the regulations to refer to the same agency). To remedy these problems, the Reorganization Rule established a new part 900 wherein terms that were used often throughout the regulations could be defined once without further repetition.

Because several major rulemakings were anticipated at the time that the Reorganization Rule was drafted, only a few definitions were moved into part 900 as part of that rule. Several more definitions were added to part 900 in subsequent rulemakings. The Finance Board has now completed a thorough review of the regulations and has selected all of the terms that it believes should logically appear in part 900. Generally, the rule would consolidate into part 900 the definitions of all terms: (1) That are used in more than two parts of the regulations; and (2) whose definition does not set forth a substantive standard. Definitions that set forth substantive standards continue to appear in the definitional sections of the parts in which the term is used, regardless of the number of times that the definition must be repeated throughout the regulations. For example, the term ''investment grade'' is used in parts 932 (capital requirements), 956 (investments) and 960 (standby letters of credit) of the regulations, but its definition has been left in each of the appropriate definitional sections because it sets forth a substantive standard that is integral to those regulations.

The remaining amendments, which are scattered throughout the regulations, either: correct mistaken cross-references or other typographical errors; change citations or paragraph headings and numbering to conform to current standards of the CFR; or make conforming changes related to the consolidation of definitions into part 900, discussed above.

Finally, because all of the amendments that would be implemented by this rule are technical and nonsubstantive, the Finance Board has adopted the rule in final form without the usual notice-and-comment process.

Regulatory Flexibility Act

This is a technical rule that reorganizes the Finance Board's regulations without substantive change. The rule will not impose any regulatory requirements on small entities. Thus, in accordance with the provisions of the Regulatory Flexibility Act, 5 U.S.C. 601 *et seq.*, the Finance Board hereby certifies that this final rule will not have a significant economic impact on a substantial number of small entities. 5 U.S.C. 605(b).

Paperwork Reduction Act

The final rule does not contain any collections of information pursuant to the Paperwork Reduction Act of 1995. See 44 U.S.C. 3501 *et seq.* Consequently, the Finance Board has not submitted any information to the Office of Management and Budget for review.

List of Subjects in 12 CFR Parts 900 Through 997

Credit, Federal home loan banks, Reporting and recordkeeping requirements.

Accordingly, under the authority of section 2B(a) of the Federal Home Loan Bank Act, 12 U.S.C. 1422b(a), chapter IX of title 12 of the Code of Federal Regulations is amended as follows:

1. Revise part 900 to read as follows:

PART 900—GENERAL DEFINITIONS APPLYING TO ALL FINANCE BOARD REGULATIONS

Sec.
900.1 Basic terms relating to the Finance Board, the Bank System and related entities.
900.2 Terms relating to Bank operations, mission and supervision.
900.3 Terms relating to other entities and concepts used throughout 12 CFR chapter IX.

Authority: 12 U.S.C. 1422b(a).

§ 900.1 Basic terms relating to the Finance Board, the Bank System and related entities.

As used throughout this chapter, the following basic terms relating to the Finance Board, the Bank System and related entities have the meanings set forth below, unless otherwise indicated in a particular subchapter, part, section, or paragraph:

Act means the Federal Home Loan Bank Act, as amended (12 U.S.C. 1421 through 1449).

Bank, written in title case, means a Federal Home Loan Bank established under section 12 of the Act (12 U.S.C. 1432).

Bank System means the Federal Home Loan Bank System, consisting of the 12 Banks and the Office of Finance.

Board of Directors, written in title case, means the Board of Directors of the Federal Housing Finance Board; the term *board of directors,* written in lower case, has the meaning indicated in context.

Chairperson means the Chairperson of the Board of Directors of the Finance Board.

Finance Board means the Federal Housing Finance Board established by section 2A of the Act (12 U.S.C. 1422a).

Financing Corporation or *FICO* means the Financing Corporation established and supervised by the Finance Board under section 21 of the Act (12 U.S.C. 1441) and part 995 of this chapter.

Housing associate means an entity that has been approved as a housing associate pursuant to part 926 of this chapter.

Member means an institution that has been approved for membership in a Bank and has purchased capital stock in the Bank in accordance with §§ 925.20 or 925.24(b) of this chapter.

Office of Finance or *OF* means the Office of Finance, a joint office of the Banks referred to in section 2B of the Act (12 U.S.C. 1422b) and established under part 985 of this chapter.

Resolution Funding Corporation or *REFCORP* means the Resolution Funding Corporation established by section 21B of the Act (12 U.S.C. 1441b) and addressed in parts 996 and 997 of this chapter.

Secretary to the Board means the Executive Secretary to the Board of Directors, an officer within the Office of the Managing Director of the Finance Board.

§ 900.2 Terms relating to Bank operations, mission and supervision.

As used throughout this chapter, the following terms relating to Bank operations, mission and supervision have the meanings set forth below, unless otherwise indicated in a particular subchapter, part, section or paragraph:

Acquired member assets or *AMA* means those assets that may be acquired by a Bank under part 955 of this chapter.

Advance means a loan from a Bank that is:

(1) Provided pursuant to a written agreement;

(2) Supported by a note or other written evidence of the borrower's obligation; and

(3) Fully secured by collateral in accordance with the Act and part 950 of this chapter.

Affordable Housing Program or AHP means the Affordable Housing Program, the CICA program that each Bank is required to establish pursuant to section 10(j) of the Act (12 U.S.C. 1430(j)) and part 951 of this chapter.

Capital plan means the capital structure plan required for each Bank by section 6(b) of the Act, as amended (12 U.S.C. 1426(b)), and part 933 of this chapter, as approved by the Finance Board, unless the context of the regulation refers to the capital plan prior to its approval by the Finance Board.

CIP means the Community Investment Program, an advance program under CICA required to be offered pursuant to section 10(i) of the Act (12 U.S.C. 1430(i)).

Community Investment Cash Advance or *CICA* means any advance made through a program offered by a Bank under section 10 of the Act (12 U.S.C. 1430) and parts 951 and 952 of this chapter to provide funding for targeted community lending and affordable housing, including advances made under a Bank's Rural Development Funding (RDF) program, offered under section 10(j)(10) of the Act (12 U.S.C. 1430(j)(10)); a Bank's Urban Development Funding (UDF) program, offered under section 10(j)(10) of the Act (12 U.S.C. 1430(j)(10)); a Bank's Affordable Housing Program (AHP), offered under section 10(j) of the Act (12 U.S.C. 1430(j)); a Bank's Community Investment Program (CIP), offered under section 10(i) of the Act (12 U.S.C. 1430(i)); or any other program offered by a Bank that meets the requirements of part 952 of this chapter.

Community lending means providing financing for economic development projects for targeted beneficiaries, and, for community financial institutions (as defined in § 925.1 of this chapter), purchasing or funding small business loans, small farm loans or small agri-business loans (as defined in § 950.1 of this chapter).

Consolidated obligation or *CO* means any bond, debenture, or note authorized under part 966 of this chapter to be issued jointly by the Banks pursuant to section 11(a) of the Act, as amended (12 U.S.C. 1431(a)), or any bond or note issued by the Finance Board on behalf of all Banks pursuant to section 11(c) of the Act (12 U.S.C. 1431(c)), on which the Banks are jointly and severally liable.

Financial Management Policy or *FMP* means the Financial Management Policy For The Federal Home Loan Bank System approved by the Finance Board pursuant to Finance Board Resolution No. 96–45 (July 3, 1996), as amended by Finance Board Resolution No. 96–90 (Dec. 6, 1996), Finance Board Resolution No. 97–05 (Jan. 14, 1997), and Finance Board Resolution No. 97–86 (Dec. 17, 1997).

§ 900.3 Terms relating to other entities and concepts used throughout 12 CFR chapter IX.

As used throughout this chapter, the following terms relating to other entities and concepts used throughout 12 CFR chapter IX have the meanings set forth below, unless otherwise indicated in a particular subchapter, part, section or paragraph:

Appropriate Federal banking agency has the meaning set forth in section 3(q) of the Federal Deposit Insurance Act (12 U.S.C. 1813(q)) and, for federally-insured credit unions, means the NCUA.

Appropriate state regulator means any state officer, agency, supervisor or other entity that has regulatory authority over, or is empowered to institute enforcement action against, a particular institution.

Fannie Mae means the Federal National Mortgage Association established under authority of the Federal National Mortgage Association Charter Act (12 U.S.C. 1716, *et seq.*).

FDIC means the Federal Deposit Insurance Corporation.

FRB means the Board of Governors of the Federal Reserve System.

Freddie Mac means the Federal Home Loan Mortgage Corporation established under authority of the Federal Home

Loan Mortgage Corporation Act (12 U.S.C. 1451, *et seq.*).

Generally Accepted Accounting Principles or *GAAP* means accounting principles generally accepted in the United States.

Ginnie Mae means the Government National Mortgage Association established under authority of the Federal National Mortgage Association Charter Act (12 U.S.C. 1716, *et seq.*).

HUD means the United States Department of Housing and Urban Development.

NCUA means the National Credit Union Administration.

NRSRO means a credit rating organization regarded as a Nationally Recognized Statistical Rating Organization by the Securities and Exchange Commission.

OCC means the Office of the Comptroller of the Currency.

OTS means the Office of Thrift Supervision.

SBIC means a small business investment company formed pursuant to section 301 of the Small Business Investment Act (15 U.S.C. 681).

State means a state of the United States, American Samoa, the Commonwealth of the Northern Mariana Islands, the District of Columbia, Guam, Puerto Rico, or the United States Virgin Islands.

PART 905—DESCRIPTION OF ORGANIZATION AND FUNCTIONS

2. Revise the authority citation for part 905 to read as follows:

Authority: 5 U.S.C. 552; 12 U.S.C. 1422b(a), 1423.

§ 905.1 [Removed and Reserved]

3. Remove and reserve § 905.1.

4. Amend § 905.2 by revising paragraphs (b) and (c) to read as follows:

§ 905.2 General statement and statutory authority.

* * * * *

(b) The members of the Board of Directors are individually referred to as Directors. The heads of the various administrative units, called offices, are also called Directors.

(c) The Finance Board administers the Act and is authorized to issue rules, regulations and orders affecting the Bank System. The Finance Board performs all such duties and responsibilities as may be required by statute. As required by section 302(b)(2) of the Federal National Mortgage Association Charter Act (12 U.S.C. 1717(b)), it also conducts a monthly survey of all major lenders to calculate a national average for interest rates on mortgages for one-family homes, on behalf of the Fannie Mae. As required by section 305(b) of the Federal Home Loan Mortgage Corporation Act (12 U.S.C. 1454(b)), it conducts a similar survey for the Freddie Mac.

5. Revise § 905.4 to read as follows:

§ 905.4 Duties of the Finance Board.

(a) *Bank System.* The Finance Board supervises and regulates the Banks and the Office of Finance. Specifically, its duties are:

(1) To ensure that the Banks operate in a safe and sound manner;

(2) To supervise all business operations of the Banks, which may include:

(i) Prescribing conditions upon which Banks may advance funds to their members and housing associates;

(ii) Prescribing rules and conditions under which a Bank may borrow funds, pay interest on those funds, or issue obligations;

(iii) Requiring examinations of the Banks; and

(iv) Appointing the public interest members of the boards of directors of the Banks;

(3) To ensure that the Banks fulfill their housing finance and community lending mission;

(4) To ensure that the Banks remain adequately capitalized; and

(5) To ensure that the Banks are able to raise funds in the capital markets.

(b) *Financing Corporation.* The Finance Board also oversees the operations of the Financing Corporation, including its issuance of obligations.

§ 905.5 [Removed]

6. Remove § 905.5.

Appendix A to Subpart A of Part 905—[Amended]

7. Amend Appendix A to subpart A of part 905 by:

a. Removing the words ''One World Trade Center, 103rd Floor, New York, NY 10048'' and adding, in their place, the words ''200 Park Avenue, New York, NY 10166–4193'';

b. Removing the words ''One Riverfront Center, 20 Stanwix Street, Pittsburgh, PA 15222–4893'' and adding, in their place, the words ''601 Grant Street, Pittsburgh, PA 15219–4455''; and

c. Removing the words ''2400 Atrium Two, 221 East Fourth Street, Cincinnati, OH 45202'' and adding, in their place, the words ''221 East Fourth Street, Suite 1000, Cincinnati, OH 45201–0598''.

Subpart C—[Removed]

8. Remove subpart C from part 905.

Subpart D—[Redesignated]

9. Redesignate subpart D as subpart C.

10. In the heading for newly designated subpart C, remove the word ''Procedures'' and, in its place, add the word ''Miscellaneous''.

§§ 905.50, 905.52, 905.53 [Removed]

11. Remove §§ 905.50, 905.52, 905.53.

§§ 905.51, 905.54 [Redesignated]

12. Redesignate § 905.51 as § 905.25 and § 905.54 as § 905.26.

§ 905.25 [Amended]

13. Amend newly designated § 905.25 by removing the words ''(see § 905.3)'' from the introductory text.

14. Revise newly designated § 905.26 to read as follows:

§ 905.26 Official logo and seal.

This section describes and displays the logo adopted by the Board of Directors as the official symbol representing the Finance Board. It is displayed on correspondence and selected documents. This logo also serves as the official seal used to certify and authenticate official documents of the Board of Directors.

(a) *Description.* The logo is a disc with its center consisting of three polygons arranged in an irregular line partially overlapping—each polygon drawn in a manner resembling a silhouette of a pitched roof house and with distinctive eaves under its roof—encircled by a designation scroll having an outer and inner border of plain heavy lines and containing the words ''FEDERAL HOUSING FINANCE BOARD'' in capital letters with serifs, with two mullets on the extreme left and right of the scroll.

(b) *Display.* The Finance Board's official seal and logo appears below:

PART 906—OPERATIONS

15. Revise the authority citation for part 906 to read as follows:

Authority: 12 U.S.C. 1422b, 1438(b).

§ 906.1 [Amended]

16. Amend § 906.1 by removing the definitions of the terms ''Bank System'' and ''Chairperson''.

§ 906.2 [Amended]

17. Amend paragraph (b)(3) of § 906.2, in the last sentence, by removing the words ''*pro rate*'' and, in their place, adding the words ''*pro rata*''.

§ 906.4 [Amended]

18. Amend § 906.4:

a. In the first sentence of paragraph (a) by:

i. Removing the words ''United States Code,'' and adding, in their place the words ''United States Code (31 U.S.C. 9701)''; and

ii. Removing the words ''(31 U.S.C. 9701)''.

b. In paragraph (b)(2) by:

i. Removing the word ''will'' and adding, in its place, the word ''must''; and

ii. Removing the words ''Housing Finance Directorate'' and, in their place, adding the words ''Finance Board''.

c. In paragraph (b)(3) by removing the word ''analyist'' and, in its place, adding the word ''analyst''.

§ 906.5 [Amended]

19. Amend § 906.5:

a. In paragraph (b)(1) by removing the word ''Administration'' and, in its place, adding the words ''the Office of Resource Management''.

b. In paragraph (c)(2)(iv) by adding, after the semi-colon, the word ''or''.

PART 907—PROCEDURES

20. The authority citation for part 907 continues to read as follows:

Authority: 12 U.S.C. 1422b(a)(1).

21. Amend part 907 by removing the word ''intervener'' and ''interveners'' wherever they appear and adding, in their place, respectively, the words ''intervenor'' and ''intervenors''.

§ 907.1 [Amended]

22. Amend § 907.1:

a. In the introductory text by removing the words ''For purposes of'' and, in their place, adding the words ''As used in''; and

b. By removing the definitions of the terms ''Board of Directors'', ''Chairperson'' and ''Secretary to the Board''.

§ 907.6 [Amended]

23. Amend paragraph (b)(2) of § 907.6 by removing the words ''Board of Directors'' (in title case) and, in their place, adding the words ''board of directors'' (in lower case).

PART 910—FREEDOM OF INFORMATION ACT REGULATION

24. Revise the authority citation for part 910 to read as follows:

Authority: 5 U.S.C. 552.

25. In § 910.1, revise the introductory text and the definitions of the terms ''Agency'' and ''Financial Regulatory Agency'' to read as follows:

§ 910.1 Definitions.

As used in this part:

Agency has the meaning set forth in 5 U.S.C. 552(f)(1).

* * * * *

Financial regulatory agency means the FRB, OCC, FDIC, OTS, NCUA, Farm Credit Administration, or a state officer, agency, supervisor, or other entity that has regulatory authority over, or is empowered to institute enforcement action against, a financial institution, including an insurance company.

* * * * *

§ 910.4 [Amended]

26. Amend paragraph (d)(2) of § 910.4 by removing the words ''paragraph (c)(1)'' and, in their place, adding the words ''paragraph (d)(1)''.

§ 910.9 [Amended]

27. Amend paragraph (d)(3)(i) of § 910.9, in the introductory paragraph, by removing the words ''paragraph (b)(3)'' and, in their place, adding the words ''paragraph (d)(3)''.

PART 911—AVAILABILITY OF UNPUBLISHED INFORMATION

28. The authority citation for part 911 continues to read as follows:

Authority: 5 U.S.C. 301; 12 U.S.C. 1422b(a)(1).

§ 911.1 [Amended]

29. Amend the introductory paragraph to § 911.1 by removing the words ''For purposes of'' and, in their place, adding the words ''As used in''.

§ 911.3 [Amended]

30. Amend paragraph (d) of § 911.3 by removing the words ''Federal Home Loan Bank'' wherever they appear and, in their place, adding the word ''Bank''.

PART 912—INFORMATION REGARDING MEETINGS OF THE BOARD OF DIRECTORS OF THE FEDERAL HOUSING FINANCE BOARD

31. The authority citation for part 912 continues to read as follows:

Authority: 5 U.S.C. 552b.

§§ 912.1, 912.2 [Redesignated]

32. Redesignate §§ 912.1 and 912.2 as §§ 912.2 and § 912.1, respectively.

33. Amend newly designated § 912.1 by removing the definition of the term ''Executive secretary'', by adding, in proper alphabetical sequence, a definition for the term ''Secretary to the Board'', and by revising the introductory text and the definitions of the terms ''Chairperson'' and ''Sunshine Act'', to read as follows:

§ 912.1 Definitions.

As used in this part:

* * * * *

Chairperson includes the Acting Chairperson.

* * * * *

Secretary to the Board includes the Acting Secretary if the position of Secretary is vacant.

Sunshine Act means the Government in the Sunshine Act (5 U.S.C. 552b).

§ 912.2 [Amended]

34. Amend paragraph (a) of newly designated § 912.2, in the first sentence, by removing the words ''Government in the Sunshine Act (5 U.S.C. 552b), that'' and, in their place, adding the words ''Sunshine Act, which''.

§ 912.4 [Amended]

35. Amend § 912.4:

a. In paragraph (a)(3), introductory text, by removing the word *''Provided''* and adding, in its place, the italicized word *''provided''*; and

b. In paragraph (a)(8) by removing the concluding period and adding, in its place, a semi-colon.

§ 912.5 [Amended]

36. Amend § 912.5:

a. By removing the words ''Executive Secretary'' wherever they appear and adding, in their place, the words ''Secretary to the Board'';

b. In the first sentence of paragraph (a)(5), by removing the words ''paragraphs (a) (5), (6), or (7) of § 912.4'' and adding, in their place, the words ''§ 912.4(a)(5), (6), or (7)'';

c. In paragraph (a)(6)(ii) by:

i. Removing the words ''paragraph (a) of § 912.4'' and adding, in their place, the words ''§ 912.4(a)''; and

ii. Adding, after the words ''determined by the Board'', the words ''of Directors'';

d. Removing, in paragraph (b)(1), the words ''paragraphs (a) (4), (8), (9)(i) or (10) of § 912.4'' and adding, in their place, the words ''§ 912.4(a)(4), (8), (9)(i) or (10)''; and

e. Removing, in paragraph (c)(2), the words ''paragraphs (a) (8), (9)(i) or (10)

of § 912.4'' and adding, in their place, the words ''§ 912.4(a)(8), (9)(i) or (10)''.

§ 912.6 [Amended]

37. Amend § 912.6:

a. In paragraph (a)(1) by removing the words ''paragraph (a) of § 912.4'' and adding, in their place, the words ''§ 912.4(a)'';

b. In paragraph (a)(1) by removing the words ''paragraph (a) of § 912.5'' and adding, in their place, the words ''§ 912.5(a)'';

c. In paragraph (a)(2) by removing the words ''paragraph (b) of § 912.5'' and adding, in their place, the words ''§ 912.5(b)'';

d. In the first sentence of paragraph (b) by:

i. Removing the words ''paragraph (a) of § 912.5'' and adding, in their place, the words ''§ 912.5(a)''; and

ii. Removing the words ''Executive Secretary'' and adding, in their place, the words ''Secretary to the Board''; and

e. In paragraph (c) by removing the words ''paragraph (a) of § 912.5'' and adding, in their place, the words ''§ 912.5(a)''.

PART 913—PRIVACY ACT PROCEDURES

38. The authority citation for part 913 continues to read as follows:

Authority: 5 U.S.C. 552a.

PART 913—[AMENDED]

39. In part 913, remove the words ''Executive Secretary'' wherever they appear and add, in their place, the words ''Secretary to the Board''.

§§ 913.1, 913.2 [Redesignated]

40. Redesignate §§ 913.1 and 913.2 as §§ 913.2 and § 913.1, respectively.

§ 913.3 [Amended]

41. Amend paragraph (b) of § 913.3 by adding the word ''in'' between the words ''system of records shall be'' and the words ''writing, shall contain''.

§ 913.5 [Amended]

42. Amend § 913.5:

a. In paragraph (b)(2)(vi), by removing the concluding period and adding, in its place, a semi-colon; and

b. In paragraph (c), by adding the heading ''*Accounting.*''.

§ 913.9 [Amended]

43. Amend § 913.9:

a. In paragraph (c)(1)(iii), by removing the words ''as amended, 5 U.S.C. App. 3'' and adding, in their place, the words ''as amended (5 U.S.C. App. 3)'';

b. In paragraph (c)(2)(v), by removing the words ''as amended, 5 U.S.C. App. 3'' and adding, in their place, the words ''as amended (5 U.S.C. App. 3)''; and

c. In paragraph (d), in the introductory text, by removing the words ''comprised of'' and, in their place, adding the word ''comprising''.

PART 915—BANK DIRECTOR ELIGIBILITY, APPOINTMENT AND ELECTIONS

44. Revise the authority citation for part 915 by revising it to read as follows:

Authority: 12 U.S.C. 1422a(a)(3), 1422b(a), 1426, 1427, 1432.

PART 915—[AMENDED]

45. Amend part 915 by removing the words ''docket number'' wherever they appear and adding, in their place, the words ''FHFB ID number''.

§ 915.1 [Amended]

46. Amend § 915.1:

a. In the definition of ''Discretionary directorship'', by removing the words ''section 7(a) of the Act'' and adding, in their place, the words ''section 7(a) of the Act (12 U.S.C. 1427(a))'';

b. In the definition of ''Guaranteed directorship'', by removing the words ''section 7(b) of the Act'' and adding, in their place, the words ''section 7(b) of the Act (12 U.S.C. 1427(b))''; and

c. In the definition of ''Voting state'', by removing the words ''part 933'' and adding, in its place, the words ''part 925''.

§ 915.3 [Amended]

47. Amend § 915.3:

a. In paragraph (a), fourth sentence, by:

i. Removing the words ''Section 7(d) of the Act'' and adding, in their place, the words ''section 7(d) of the Act (12 U.S.C. 1427(d))''; and

ii. Removing the word ''chapter'' and, in its place, adding the word ''part'';

b. In paragraph (b)(4) by adding, after the words ''section 7(e) of the Act'', the words ''(12 U.S.C. 1427(e))'';

c. In paragraph (b)(5), in the first sentence, by adding, after the words ''section 7(a) of the Act'', the words ''(12 U.S.C. 1427(a))''; and

d. In paragraph (d) by:

i. Adding, preceding the text, the heading ''Location of member.''; and

ii. Adding after the words ''section 7(c) of the Act'', the words ''(12 U.S.C. 1427(c))''.

§ 915.5 [Amended]

48. Amend paragraph (c) of § 915.5, in the second sentence, by removing the words ''Section 7(b) of the Act'' and adding, in their place, the words ''section 7(b) of the Act (12 U.S.C. 1427(b))''.

§ 915.7 [Amended]

49. Amend § 915.7:

a. In paragraph (b)(2):

i. In the first sentence, by removing the words ''A bona fide resident of the Bank district or an'' and adding, in their place, the word ''An''; and

ii. In the first sentence, by removing the words ''appropriate federal regulator'' and, in their place, adding the words ''appropriate Federal banking agency'';

b. By removing the second sentence;

c. In paragraph (c)(1), by redesignating paragraphs (c)(1)(i) and (c)(1)(ii) as paragraphs (c)(1)(i)(A) and (c)(1)(i)(B), respectively;

d. By redesignating paragraphs (c)(1), (c)(2) and (c)(3) as paragraphs (c)(1)(i), (c)(1)(ii) and (c)(1)(iii), respectively;

e. By designating the introductory text of paragraph (c) as paragraph (c)(1) introductory text;

f. By redesignating paragraph (c)(4) as paragraph (c)(2);

g. In newly designated paragraph (c)(1)(i)(B), by removing the word ''Act.'' and adding, in its place, the words ''Act (12 U.S.C. 1427(d));'';

h. In newly designated paragraph (c)(1)(ii), by removing the period and, in its place, adding the word ''; or'';

i. In newly designated paragraph (c)(2), by removing the words ''Section 7(d) of the Act'' and adding, in their place, the words ''section 7(d) of the Bank Act (12 U.S.C. 1427(d))''; and

j. In paragraph (d)(2), by removing the words ''Section 7(f) of the Bank Act'' and adding, in their place, the words ''section 7(f) of the Act (12 U.S.C. 1427(f))''.

§ 915.8 [Amended]

50. Amend paragraph (b) of § 915.8 by adding, before the period at the end of the second sentence, the words ''of this section''.

§ 915.10 [Amended]

51. Amend paragraph (b) of § 915.10:

a. In both the first and second sentences, by removing the words ''Section 7(d) of the Act'' and adding, in their place, the words ''section 7(d) of the Act (12 U.S.C. 1427(d))''; and

b. In the second sentence, by removing the word ''Part'' both places that it appears and, in its place, adding the word ''part''.

§ 915.12 [Amended]

52. Amend paragraph (a) of § 915.12, in the parenthetical following the first sentence, by removing the words ''12 CFR 905.51'' and adding, in their place, the words ''§ 905.25 of this chapter''.

§ 915.15 [Amended]

53. Amend § 915.15, in the first sentence, by removing the word ''Act'' and adding, in its place, the words ''Act (12 U.S.C. 1427(c))''.

§ 915.16 [Amended]

54. Amend paragraph (e) of § 915.16, in the second sentence, by removing the words ''Section 7(d) of the Bank Act'' and adding, in their place, the words ''section 7(d) of the Act (12 U.S.C. 1427(d))''.

§ 915.17 [Amended]

55. Amend paragraph (a)(1) of § 915.17, in the second sentence, by removing the words ''Section 7(a) of the Bank Act'' and adding, in their place, the words ''section 7(a) of the Act (12 U.S.C. 1427(a))''.

PART 917—POWERS AND RESPONSIBILITIES OF BANK BOARDS OF DIRECTORS AND SENIOR MANAGEMENT

56. The authority citation for part 917 continues to read as follows:

Authority: 12 U.S.C. 1422a(a)(3), 1422b(a)(1), 1426, 1427, 1432(a), 1436(a), 1440.

§ 917.1 [Amended]

57. Amend § 917.1:

a. By removing the definition of ''Capital structure plan''; and

b. In paragraph (4) of the definition of ''Contingency liquidity'', by removing the words ''a credit rating organization regarded as a Nationally Recognized Statistical Rating Organization by the Securities and Exchange Commission'' and adding, in their place, the words ''an NRSRO''.

§ 917.3 [Amended]

58. Amend paragraph (b)(3)(i) of § 917.3 by removing the word ''and'' that appears after the semi-colon.

§ 917.4 [Amended]

59. Amend paragraph (a)(1) of § 917.4 by adding, between the words ''advances,'' and ''letters of credit'', the word ''standby''.

§ 917.5 [Amended]

60. Amend § 917.5:

a. In paragraph (a) introductory text, by removing the words ''90 days after the effective date of this section'' and, in their place, adding the words ''on July 30, 2000'';

b. In paragraph (a)(4), by adding a hard (paragraph) return after the word ''and'' and

c. In paragraph (c) by designating as a heading (italicizing) the words ''Report to Finance Board''.

§ 917.6 [Amended]

61. Amend paragraph (c) of § 917.6, in the introductory text, by adding a comma after the words ''paragraph (a)(1) of this section''.

§ 917.7 [Amended]

62. Amend paragraph (e)(8) of § 917.7 by removing the words ''implementation of with the Bank's'' and, in their place, adding the words ''implementation of the Bank's''.

PART 918—BANK DIRECTOR COMPENSATION AND EXPENSES

63. The authority citation for part 918 continues to read as follows:

Authority: 12 U.S.C. 1422b(a), 1427.

§ 918.3 [Amended]

64. Amend paragraph (a)(1) of § 918.3 by removing the words ''Act, as amended, 12 U.S.C. 1427(i)'' and adding, in their place, the words ''Act (12 U.S.C. 1427(i))''.

§ 918.5 [Amended]

65. Amend § 918.5 by removing the words ''Act, as amended'' and adding, in their place, the words ''Act (12 U.S.C. 1427(i))''.

§ 918.7 [Amended]

66. Amend § 918.7 by removing the words ''Act, as amended'' and adding, in their place, the words ''Act (12 U.S.C. 1427(i))''.

§ 918.9 [Amended]

67. Amend § 918.9 by adding the word ''former'' between the words ''officers and employees in'' and the words ''12 CFR 932.19''.

PART 925—MEMBERS OF THE BANKS

68. The authority citation part 925 continues to read as follows:

Authority: 12 U.S.C. 1422, 1422a, 1422b, 1423, 1424, 1426, 1430, 1442.

69. Revise § 925.1 to read as follows:

§ 925.1 Definitions.

For purposes of this part:

Adjusted net income means net income, excluding extraordinary items such as income received from, or expense incurred in, sales of securities or fixed assets, reported on a regulatory financial report.

Aggregate unpaid loan principal means the aggregate unpaid principal of a subscriber's or member's home mortgage loans, home-purchase contracts and similar obligations.

Allowance for loan and lease losses means a specified balance-sheet account held to fund potential losses on loans or leases, that is reported on a regulatory financial report.

Appropriate regulator means a regulatory entity listed in § 925.8, as applicable.

Combination business or farm property means real property for which the total appraised value is attributable to residential, and business or farm uses.

Community financial institution or *CFI* means an institution:

(1) The deposits of which are insured under the Federal Deposit Insurance Act (12 U.S.C. 1811, *et seq.*); and

(2) That has, as of the date of the transaction at issue, less than the community financial institution asset cap in total assets, based on an average of total assets over three years, which shall be calculated by the Bank based on the average of total assets drawn from the institution's regulatory financial reports filed with its appropriate regulator for the most recent calendar quarter and the immediately preceding 11 calendar quarters.

Community financial institution asset cap means, for 2000, $500 million. Beginning in 2001 and for subsequent years, the cap shall be adjusted annually by the Finance Board to reflect any percentage increase in the preceding year's Consumer Price Index (CPI) for all urban consumers, as published by the U.S. Department of Labor. Each year, as soon as practicable after the publication of the previous year's CPI, the Finance Board shall publish notice by the **Federal Register** of the CPI-adjusted cap.

Composite regulatory examination rating means a composite rating assigned to an institution following the guidelines of the Uniform Financial Institutions Rating System (Issued by the Federal Financial Institutions Examination Council; for availability contact the Federal Housing Finance Board, FOIA Office, 1777 F Street, NW., Washington, DC 20006), including a CAMEL rating, a MACRO rating, or other similar rating, contained in a written regulatory examination report.

Consolidation includes a consolidation, a merger, or a purchase of all of the assets and assumption of all of the liabilities of an entity by another entity.

Dwelling unit means a single room or a unified combination of rooms designed for residential use.

Enforcement action means any written notice, directive, order or

agreement initiated by an applicant for Bank membership or by its appropriate regulator to address any operational, financial, managerial or other deficiencies of the applicant identified by such regulator, but does not include a board of directors resolution adopted by the applicant in response to examination weaknesses identified by such regulator.

Funded residential construction loan means the portion of a loan secured by real property made to finance the on-site construction of dwelling units on one-to-four family property or multifamily property disbursed to the borrower.

Home mortgage loan means:

(1) A loan, whether or not fully amortizing, or an interest in such a loan, which is secured by a mortgage, deed of trust, or other security agreement that creates a first lien on one of the following interests in property:

(i) One-to-four family property or multifamily property, in fee simple;

(ii) A leasehold on one-to-four family property or multifamily property under a lease of not less than 99 years that is renewable, or under a lease having a period of not less than 50 years to run from the date the mortgage was executed; or

(iii) Combination business or farm property where at least 50 percent of the total appraised value of the combined property is attributable to the residential portion of the property or, in the case of any community financial institution, combination business or farm property, on which is located a permanent structure actually used as a residence (other than for temporary or seasonal housing), where the residence constitutes an integral part of the property; or

(2) A mortgage pass-through security that represents an undivided ownership interest in:

(i) Long-term loans, provided that, at the time of issuance of the security, all of the loans meet the requirements of paragraph (1) of this definition; or

(ii) A security that represents an undivided ownership interest in long-term loans, provided that, at the time of issuance of the security, all of the loans meet the requirements of paragraph (1) of this definition.

Insured depository institution means an insured depository institution as defined in section 2(12) of the Act (12 U.S.C. 1422(12)).

Long-term means a term to maturity of five years or greater.

Manufactured housing means a manufactured home as defined in section 603(6) of the Manufactured Home Construction and Safety Standards Act of 1974, as amended (42 U.S.C. 5402(6)).

Multifamily property means:

(1) Real property that is solely residential and includes five or more dwelling units;

(2) Real property that includes five or more dwelling units combined with commercial units, provided that the property is primarily residential; or

(3) Nursing homes, dormitories, or homes for the elderly.

Nonperforming loans and leases means the sum of the following, reported on a regulatory financial report:

(1) Loans and leases that have been past due for 90 days (60 days in the case of credit union applicants) or longer but are still accruing;

(2) Loans and leases on a nonaccrual basis; and

(3) Restructured loans and leases (not already reported as nonperforming).

Nonresidential real property means real property that is not used for residential purposes, including business or industrial property, hotels, motels, churches, hospitals, educational and charitable institution buildings or facilities, clubs, lodges, association buildings, golf courses, recreational facilities, farm property not containing a dwelling unit, or similar types of property.

One-to-four family property means:

(1) Real property that is solely residential, including one-to-four family dwelling units or more than four family dwelling units if each dwelling unit is separated from the other dwelling units by dividing walls that extend from ground to roof, such as row houses, townhouses or similar types of property;

(2) Manufactured housing if applicable state law defines the purchase or holding of manufactured housing as the purchase or holding of real property;

(3) Individual condominium dwelling units or interests in individual cooperative housing dwelling units that are part of a condominium or cooperative building without regard to the number of total dwelling units therein; or

(4) Real property which includes one-to-four family dwelling units combined with commercial units, provided the property is primarily residential.

Other real estate owned means all other real estate owned (i.e., foreclosed and repossessed real estate), reported on a regulatory financial report, and does not include direct and indirect investments in real estate ventures.

Regulatory examination report means a written report of examination prepared by the applicant's appropriate regulator, containing, in the case of insured depository institution applicants, a composite rating assigned to the institution following the guidelines of the Uniform Financial Institutions Rating System, including a CAMEL rating, a MACRO rating, or other similar rating.

Regulatory financial report means a financial report that an applicant is required to file with its appropriate regulator on a specific periodic basis, including the quarterly call report for commercial banks, thrift financial report for savings associations, quarterly or semi-annual call report for credit unions, the National Association of Insurance Commissioners' annual or quarterly report for insurance companies, or other similar report, including such report maintained by the appropriate regulator on a computer on-line database.

Residential mortgage loan means any one of the following types of loans, whether or not fully amortizing:

(1) Home mortgage loans;

(2) Funded residential construction loans;

(3) Loans secured by manufactured housing whether or not defined by state law as secured by an interest in real property;

(4) Loans secured by junior liens on one-to-four family property or multifamily property;

(5) Mortgage pass-through securities representing an undivided ownership interest in:

(i) Loans that meet the requirements of paragraphs (1) through (4) of this definition at the time of issuance of the security;

(ii) Securities representing an undivided ownership interest in loans, provided that, at the time of issuance of the security, all of the loans meet the requirements of paragraphs (1) through (4) of this definition; or

(iii) Mortgage debt securities as defined in paragraph (6) of this definition;

(6) Mortgage debt securities secured by:

(i) Loans, provided that, at the time of issuance of the security, substantially all of the loans meet the requirements of paragraphs (1) through (4) of this definition;

(ii) Securities that meet the requirements of paragraph (5) of this definition; or

(iii) Securities secured by assets, provided that, at the time of issuance of the security, all of the assets meet the requirements of paragraphs (1) through (5) of this definition;

(7) Home mortgage loans secured by a leasehold interest, as defined in

paragraph (1)(ii) of the definition of ''home mortgage loan,'' except that the period of the lease term may be for any duration; or

(8) Loans that finance properties or activities that, if made by a member, would satisfy the statutory requirements for the CIP established under section 10(i) of the Act (12 U.S.C. 1430(i)), or the regulatory requirements established for any CICA program.

Total assets means the total assets reported on a regulatory financial report.

§ 925.3 [Amended]

70. Amend paragraph (c) of § 925.3, in the last sentence, by removing the words ''Executive Secretary'' and adding, in their place, the words ''Secretary to the Board''.

§ 925.4 [Amended]

71. Amend paragraph (c)(2) of § 925.4 by:

a. Removing the reference to ''§ 925.25(d)(1)(i)'' and adding, in its place, a reference to ''§ 925.24(b)(4)(i)''; and

b. Removing the reference to ''§§ 925.25(d)(2)(i), (e) and (f)'' and adding, in its place, a reference to ''§ 925.24(c) and (d)''.

§ 925.5 [Amended]

72. Amend paragraph (a)(2) of § 925.5 by removing the words ''Executive Secretary'' and adding, in their place, the words ''Secretary to the Board''.

§ 925.7 [Amended]

73. Amend § 925.7 by adding the words ''(12 U.S.C. 1424(a)(1)(A))'' between the words ''of the Act'' and the words ''and § 925.6(a)(1)''.

§ 925.8 [Amended]

74. Amend § 925.8 by:

a. Adding the words ''(12 U.S.C. 1424(a)(1)(B))'' between the words ''of the Act'' and the words ''and § 925.6(a)(2)''; and

b. Removing the words ''Federal Deposit Insurance Corporation, the Federal Reserve Board, the National Credit Union Administration, the Office of the Comptroller of the Currency, the Office of Thrift Supervision'' and, in their place, adding the words ''FDIC, FRB, NCUA, OCC, OTS''.

§ 925.9 [Amended]

75. Amend § 925.9 by adding the words ''(12 U.S.C. 1424(a)(1)(C))'' between the words ''of the Act'' and the words ''and § 925.6(a)(3)''.

§ 925.10 [Amended]

76. Amend § 925.10 by:

a. Adding the words ''(12 U.S.C. 1424(a)(2)(A))'' between the words ''of the Act'' and the words ''and § 925.6(b)''; and

b. Removing the words ''§ 925.1(bb)(6)'' and, in their place, adding the words ''paragraph (6) of the definition of 'residential mortgage loan' set forth in § 925.1''.

§ 925.11 [Amended]

77. Amend § 925.11:

a. In paragraph (a), by adding the words ''(12 U.S.C. 1424(a)(2)(B))'' between the words ''of the Act'' and the words ''and § 925.6(a)(4)'';

b. In paragraph (b), introductory text, by adding the words ''(12 U.S.C. 1424(a)(2)(B))'' between the words ''of the Act'' and the words ''and § 925.6(a)(4)'';

c. In paragraph (b)(3), by removing the words ''was '1;' or, was '2' or'' and adding, in their place, the words ''was '1;' or was '2' or''; and

d. In paragraph (c), by adding the words ''(12 U.S.C. 1424(a)(2)(B))'' between the words ''of the Act'' and the words ''and § 925.6(a)(4)''.

§ 925.12 [Amended]

78. Amend the introductory text of § 925.12 by adding the words ''(12 U.S.C. 1424(a)(2)(C))'' between the words ''of the Act'' and the words ''and § 925.6(a)(5)''.

§ 925.13 [Amended]

79. Amend paragraph (a) of § 925.13 by adding the words ''(12 U.S.C. 1424(a)(2)(C))'' between the words ''of the Act'' and the words ''and § 925.6(a)(6)''.

80. Revise § 925.14 to read as follows:

§ 925.14 De novo insured depository institution applicants.

(a) *Duly organized, subject to inspection and regulation, financial condition and character of management requirements.* An insured depository institution applicant whose date of charter approval is within three years prior to the date the Bank receives the applicant's application for membership in the Bank (de novo applicant) is deemed to meet the requirements of §§ 925.7, 925.8, 925.11 and 925.12.

(b) *Makes long-term home mortgage loans requirement.* A de novo applicant shall be deemed to make long-term home mortgage loans as required by § 925.9 if it has filed as part of its application for membership a written justification acceptable to the Bank of how its home financing credit policy and lending practices will include originating or purchasing long-term home mortgage loans.

(c) *10 percent requirement.* (1) *One-year requirement.* A de novo applicant that is subject to the 10 percent requirement of section 4(a)(2)(A) of the Act (12 U.S.C. 1424(a)(2)(A)) and § 925.6(b) shall have until one year after commencing its initial business operations to meet the 10 percent requirement of § 925.10.

(2) *Conditional approval.* A de novo applicant shall be conditionally deemed to be in compliance with the 10 percent requirement of section 4(a)(2)(A) of the Act (12 U.S.C. 1424(a)(2)(A)) and § 925.6(b). A de novo applicant that receives such conditional membership approval is subject to the stock purchase requirements of § 925.20 and the advances provisions of part 950 of this chapter.

(3) *Approval.* A de novo applicant shall be deemed to be in compliance with the 10 percent requirement of section 4(a)(2)(A) of the Bank Act (12 U.S.C. 1424(a)(2)(A)) and § 925.6(b) upon receipt by the Bank from the applicant, within one year after commencement of the applicant's initial business operations, of evidence acceptable to the Bank that the applicant satisfies the 10 percent requirement.

(4) *Conditional approval deemed null and void.* If the requirements of paragraph (c)(3) of this section are not satisfied, a de novo applicant shall be deemed to be in noncompliance with the 10 percent requirement of section 4(a)(2)(A) of the Act (12 U.S.C. 1424(a)(2)(A)) and § 925.6(b), and its conditional membership approval is deemed null and void.

(5) *Treatment of outstanding advances and Bank stock.* If a de novo applicant's conditional membership approval is deemed null and void pursuant to paragraph (c)(4) of this section, the liquidation of any outstanding indebtedness owed by the applicant to the Bank and redemption of stock of such Bank shall be carried out in accordance with § 925.29.

(d) *Home financing policy requirement.* (1) *Conditional approval.* A de novo applicant that has not received its first formal, or, if unavailable, informal or preliminary, Community Reinvestment Act (CRA) performance evaluation, shall be conditionally deemed to be in compliance with the home financing policy requirement of section 4(a)(2)(C) of the Act (12 U.S.C. 1424(a)(2)(C)) and § 925.6(a)(6), if the applicant has filed as part of its application for membership a written justification acceptable to the Bank of how and why its home financing credit policy and lending practices will meet the credit needs of

its community. An applicant that receives such conditional membership approval is subject to the stock purchase requirements of § 925.20 and the advances provisions of part 950 of this chapter.

(2) *Approval.* A de novo applicant that has been granted conditional approval under paragraph (d)(1) of this section shall be deemed to be in compliance with the home financing policy requirement of section 4(a)(2)(C) of the Act (12 U.S.C. 1424(a)(2)(C)) and § 925.6(a)(6) upon receipt by the Bank of evidence from the applicant that it received a CRA rating of ''Satisfactory'' or better on its first formal, or if unavailable, informal or preliminary, CRA performance evaluation.

(3) *Conditional approval deemed null and void.* If the de novo applicant's first such CRA rating is ''Needs to Improve'' or ''Substantial Non-Compliance,'' the applicant shall be deemed to be in noncompliance with the home financing policy requirement of section 4(a)(2)(C) of the Act (12 U.S.C. 1424(a)(2)(C)) and § 925.6(a)(6), subject to rebuttal by the applicant under § 925.17(f), and its conditional membership approval is deemed null and void.

(4) *Treatment of outstanding advances and Bank stock.* If the applicant's conditional membership approval is deemed null and void pursuant to paragraph (d)(3) of this section, the liquidation of any outstanding indebtedness owed by the applicant to the Bank and redemption of stock of such Bank shall be carried out in accordance with § 925.29.

§ 925.16 [Amended]

81. Amend § 925.16 by adding the words ''(12 U.S.C. 1424(a)(2)(B))'' between the words ''of the Act'' and the words ''and § 925.6(a)(4)''.

§ 925.17 [Amended]

82. Amend § 925.17:

a. In paragraph (a) by removing the words ''of the Act and § 925.6 (a)'' and adding, in their place, the words ''of the Act (12 U.S.C. 1424(a)) and § 925.6(a)'';

b. In paragraph (b) by removing the words ''of the Act and § 925.6(a) (2)'' and adding, in their place, the words ''of the Act (12 U.S.C. 1424(a)) and § 925.6(a)(2)''; and

c. In the heading to paragraph (f), by removing the words ''925.13, 925.14(a)(4), and 925.14(b)(3)'' and, in their place, adding the words ''925.13 and 925.14(d)''.

§ 925.18 [Amended]

83. Amend paragraph (e) of § 925.18 by removing the words ''of the Act or §§ 925.26, 925.27, and 925.28'' and, in their place, adding the words ''of the Act (12 U.S.C. 1426) or §§ 925.26 and 925.27''.

§ 925.22 [Amended]

84. Amend § 925.22:

a. In paragraph (b)(2), by removing the word ''Board'' wherever it appears and adding, in its place, the words ''Finance Board''; and

b. In paragraph (c) by removing the words ''of the Act, 12 U.S.C. 1426(b), 1430(c), 1430(e)'' and adding, in their place, the words ''of the Act (12 U.S.C. 1426(b), 1430(c), 1430(e))''.

§ 925.24 [Amended]

85. Amend § 925.24:

a. In paragraph (b)(5), in the first sentence, by adding the words ''(12 U.S.C. 1426)'' immediately preceding the period;

b. In paragraph (c) by removing the word ''Chapter'' and adding, in its place, the word ''chapter''; and

c. In paragraph (d), by removing the words ''of the Act, 12 U.S.C. 1426(f)'' and adding, in their place, the words ''of the Act (12 U.S.C. 1426(f))''.

§ 925.26 [Amended]

86. Amend paragraph (d) of § 925.26 by removing the words ''requirements under 12 U.S.C. 1441b(f)(2)(C)'' and, in their place, adding the words ''requirements under section 21B(f)(2)(C) of the Act (12 U.S.C. 1441b(f)(2)(C))''.

§ 925.31 [Amended]

87. Amend § 925.31:

a. In paragraph (a), by removing the word ''Board'' and adding, in its place, the words ''Finance Board''; and

b. In paragraph (b), by removing the word ''Board'' and adding, in its place, the words ''Finance Board''.

PART 926—FEDERAL HOME LOAN BANK HOUSING ASSOCIATES

88. The authority citation for § 926.1 continues to read as follows:

Authority: 12 U.S.C. 1422b(a), 1430b.

§ 926.1 [Amended]

89. Amend § 926.1 by removing the definitions of the terms ''Advance'' and ''HUD''.

§ 926.4 [Amended]

90. Amend § 926.4:

a. In paragraph (a) by adding the words ''(12 U.S.C. 1430b(a))'' between the words ''of the Act'' and the words ''and § 926.3(a)(1)'';

b. In paragraph (c)(1), by adding the words ''(12 U.S.C. 1430b(a))'' between the words ''of the Act'' and the words ''and § 926.3(a)(3)''; and

c. In paragraph (d), in the first sentence, by adding the words ''(12 U.S.C. 1430b(a))'' between the words ''of the Act'' and the words ''and § 926.3(a)(4)''.

PART 930—DEFINITIONS APPLYING TO RISK MANAGEMENT AND CAPITAL REGULATIONS

91. The authority citation for part 930 continues to read as follows:

Authority: 12 U.S.C. 1422a(a)(3), 1422b(a), 1426, 1440, 1443, 1446.

92. Amend § 930.1 by:

a. Removing the definitions of the terms ''Capital plan'' and ''GAAP''; and

b. Revising the definitions of the terms ''Contingency liquidity'', ''Credit risk'', ''Market risk'' and ''Operations risk'' to read as follows:

§ 930.1 Definitions.

As used in this subchapter:

* * * * *

Contingency liquidity means the sources of cash a Bank may use to meet its operational requirements when its access to the capital markets is impeded, and includes:

(1) Marketable assets with a maturity of one year or less;

(2) Self-liquidating assets with a maturity of seven days or less;

(3) Assets that are generally accepted as collateral in the repurchase agreement market; and

(4) Irrevocable lines of credit from financial institutions rated not lower than the second highest credit rating category by an NRSRO.

* * * * *

Credit risk means the risk that the market value, or estimated fair value if market value is not available, of an obligation will decline as a result of deterioration in creditworthiness.

* * * * *

Market risk means the risk that the market value, or estimated fair value if market value is not available, of a Bank's portfolio will decline as a result of changes in interest rates, foreign exchange rates, equity and commodity prices.

* * * * *

Operations risk means the risk of an unexpected loss to a Bank resulting from human error, fraud, unenforceability of legal contracts, or deficiencies in internal controls or information systems.

* * * * *

PART 932—FEDERAL HOME LOAN BANK CAPITAL REQUIREMENTS

93. The authority citation for part 932 continues to read as follows:

Authority: 12 U.S.C. 1422a(a)(3), 1422b(a), 1426, 1440, 1443, 1446.

§ 932.4 [Amended]

94. Amend paragraph (g)(1)(i) of § 932.4 by adding a hard (paragraph) return after the word ''or''.

PART 940—CORE MISSION ACTIVITIES

95–96. The authority citation for part 940 continues to read as follows:

Authority: 12 U.S.C. 1422a(a)(3), 1422b(a), 1430, 1430b, 1431.

97. Revise § 940.1 to read as follows:

§ 940.1 Definitions.

As used in this part:

Targeted income level has the meaning set forth in paragraphs (1) and (2) of the definition of ''targeted income level'' in § 952.1 of this chapter.

§ 940.2 [Amended]

98. Amend § 940.2:

a. In the introductory text, by:

i. Removing the word ''associates'' and adding, in its place, the words ''housing associates''; and

ii. Removing the words ''members'' and associates' financing of'' and adding, in their place, the words ''members'' and housing associates''; and

b. In paragraph (a) of § 940.2 by removing the word ''Housing'' and adding, in its place, the words ''Financing of housing''.

PART 944—COMMUNITY SUPPORT REQUIREMENTS

99. Revise the authority citation for part 944 to read as follows:

Authority: 12 U.S.C. 1422a(a)(3)(B), 1422b(a)(1), 1430(g).

100. Revise § 944.1 to read as follows:

§ 944.1 Definitions.

For purposes of this part:

Advisory Council means the Advisory Council each Bank is required to establish pursuant to section 10(j)(11) of the Act (12 U.S.C. 1430(j)(11)) and part 951 of this chapter.

CRA means the Community Reinvestment Act of 1977, as amended (12 U.S.C. 2901, et seq.).

CRA evaluation means the public disclosure portion of the CRA performance evaluation provided by a member's appropriate Federal banking agency.

Displaced homemaker means an adult who has not worked full-time, full-year in the labor force for a number of years and, during that period, worked primarily without remuneration to care for a home and family, and currently is unemployed or underemployed and is experiencing difficulty in obtaining or upgrading employment.

First-time homebuyer means:

(1) An individual and his or her spouse, if any, who has had no present ownership interest in a principal residence during the three-year period prior to purchase of a principal residence.

(2) A displaced homemaker who, except for owning a residence with his or her spouse or residing in a residence owned by his or her spouse, meets the requirements of paragraph (1) of this definition.

(3) A single parent who, except for owning a residence with his or her spouse or residing in a residence owned by his or her spouse, meets the requirements of paragraph (1) of this definition.

Long-term advance means an advance with a term to maturity greater than one year.

Restriction on access to long-term advances means a member may not borrow long-term advances or renew any maturing advance for a term to maturity greater than one year.

Single parent means an individual who is unmarried or legally separated from a spouse and has custody or joint custody of one or more minor children or is pregnant.

Targeted community lending has the meaning set forth in § 952.1 of this chapter.

§ 944.2 [Amended]

101. Amend § 944.2:

a. In paragraph (b)(2) introductory text, by adding the word ''to'' immediately preceding the colon; and

b. In paragraph (b)(2)(i), by removing the words ''To each'' and adding, in their place, the word ''Each''.

§ 944.3 [Amended]

102. Amend § 944.3:

a. In paragraph (b)(2), second sentence, by removing the words ''federal financial supervisory agency'' and adding, in their place, the words ''Federal banking agency'';

b. In paragraph (c)(1)(i), by removing the word ''or'';

c. In paragraph (c)(1) (ii)(B), by adding the word ''or'' immediately following the semi-colon;

d. In paragraph (c)(1)(ii)(C), by removing the word ''or'' that immediately follows the semi-colon; and

e. In paragraph (c)(2) of § 944.3, in the third sentence, by removing the word ''§ 936.5'' and adding, in their place, the word ''§ 944.5''.

§ 944.5 [Amended]

103. Amend § 944.5:

a. In paragraph (b), by removing the comma following the word ''advances'' and adding, in its place, a colon;

b. In paragraph (d)(1)(i) of § 944.5:

i. In the third sentence, by removing the words ''federal financial supervisory agency, or the National Credit Union Administration for a federally insured credit union member, or the member's *appropriate state regulator*'' and, in their place, adding the words ''Federal banking agency, or the member's appropriate state regulator''; and

ii. By removing the last sentence; and

c. In paragraph (d)(3), by removing the comma following the words ''paragraph (d)'' and adding, in its place, a colon.

§ 944.6 [Amended]

104. Amend § 944.6:

a. In paragraph (a)(3) by removing the word ''and'' that immediately follows the semi-colon;

b. In paragraph (a)(4), by adding the word ''and'' immediately following the semi-colon; and

c. In paragraph (a)(5)(iii), by removing the words ''nonmember borrowers'' and adding, in their place, the words ''housing associates''.

§ 944.7 [Amended]

105. Amend § 944.7 by adding the words ''(12 U.S.C. 1430(j)(11))'' between the words ''of the Act'' and the words ''shall include''.

PART 950—ADVANCES

106. Revise the authority citation for part 950 to read as follows:

Authority: 12 U.S.C. 1422a(a)(3), 1422b(a)(1), 1426, 1429, 1430, 1430b, 1431.

107. Amend § 950.1 by:

a. Removing the definitions of the terms ''Advance'', ''Affordable Housing Program or AHP'', ''Appropriate Federal banking agency'', ''Community Investment Cash Advance or CICA'', ''FDIC'', ''GAAP'', ''HUD'', ''OCC'', ''OTS'', and ''State''; and

b. Adding, in correct alphabetical sequence, definitions for the terms ''CFI member'' and ''Credit Union'' and revising the definitions for the terms ''Depository institution'', ''Dwelling unit'', ''Insurer'', ''Long-term advance'', ''Multi-family property'', ''Nonresidential real property'', ''Small business loans'', ''State housing finance agency or SHFA'' and ''Tangible capital'' to read as follows:

§ 950.1 Definitions.

As used in this part:

* * * * *

CFI member means a member that is a Community Financial Institution, as defined in § 925.1 of this chapter, except that, for purposes of this part, the member's average of total assets over three years shall be calculated by the Bank:

(1) Based on the average of total assets drawn from the institution's regulatory financial reports (as defined in § 925.1 of this chapter) filed with its appropriate regulator (as defined in § 925.1 of this chapter) for the three most recent calendar year-ends; and

(2) Annually, and shall be effective April 1 of each year.

Credit union means a credit union as defined in section 101 of the Federal Credit Union Act (12 U.S.C. 1752).

Depository institution means a bank, savings association, or credit union.

Dwelling unit means a single room or a unified combination of rooms designed for residential use by one household.

* * * * *

Insurer means the FDIC for insured depository institutions, as defined section 3(c)(2) of the Federal Deposit Insurance Act (12 U.S.C. 1813(c)(2)), and the NCUA for federally-insured credit unions.

Long-term advance means an advance with an original term to maturity greater than five years.

* * * * *

Multifamily property means:

(1)(i) Real property that is solely residential and which includes five or more dwelling units; or

(ii) Real property which includes five or more dwelling units with commercial units combined, provided the property is primarily residential.

(2) Multifamily property as defined in this section includes nursing homes, dormitories and homes for the elderly.

Nonresidential real property means real property not used for residential purposes, including business or industrial property, hotels, motels, churches, hospitals, educational and charitable institutions, clubs, lodges, association buildings, golf courses, recreational facilities, farm property not containing a dwelling unit, or similar types of property, except as otherwise determined by the Finance Board in its discretion.

* * * * *

Small business loans means commercial and industrial loans that are within the legal lending limit of the reporting CFI member and that are reported on either: Schedule RC–C, Part I, item 1.e or Schedule RC–C, Part I, item 4 of the Report of Condition and Income filed by insured commercial banks and FDIC-supervised savings banks; or Schedule SC300, SC303 or SC306 of the Thrift Financial Report filed by savings associations (or equivalent successor schedules).

* * * * *

State housing finance agency or *SHFA* has the meaning set forth in § 926.1 of this chapter.

* * * * *

Tangible capital means:

(1) Capital, calculated according to GAAP, less ''intangible assets'' except for purchased mortgage servicing rights to the extent such assets are included in a member's core or Tier 1 capital, as reported in the member's Thrift Financial Report for members whose primary federal regulator is the OTS, or as reported in the Report of Condition and Income for members whose primary federal regulator is the FDIC, the OCC, or the FRB.

(2) Capital calculated according to GAAP, less intangible assets, as defined by a Bank for members that are not regulated by the OTS, the FDIC, the OCC, or the FRB; provided that a Bank shall include a member's purchased mortgage servicing rights to the extent such assets are included for the purpose of meeting regulatory capital requirements.

§ 950.2 [Amended]

108. Amend the heading to paragraph (d) of § 950.2 by removing the words ''Approval—By the Bank's board of directors'' and, in their place, adding the words ''Form of applications and agreements''.

§ 950.4 [Amended]

109. Amend § 950.4:

a. In paragraph (e)(1), by removing the word ''monthly'' and, in its place, adding the word ''quarterly'';

b. In paragraph (e)(2), by removing the word ''monthly'' and, in its place, adding the word ''quarterly'';

c. In paragraph (g)(2)(i), by removing the word ''950.4(b)(2)'' and, in its place, adding the word ''950.2(b)(2)''; and

d. In paragraph (g)(2)(ii), by removing the word ''950.4(a)'' and, in its place, adding the word ''950.2(a)''.

110. Amend § 950.7 by revising paragraphs (a)(1)(ii)(D), (a)(2)(i) and (e)(3) to read as follows:

§ 950.7 Collateral.

(a) * * *

(1) * * *

(ii) * * *

(D) Such other high-risk securities as the Finance Board in its discretion may determine.

(2) * * *

(i) Mortgage-backed securities issued or guaranteed by Freddie Mac, Fannie Mae, Ginnie Mae, or any other agency of the United States Government;

* * * * *

(e) * * *

(3) The security interest of the Bank in such member's Bank stock shall be entitled to the priority provided for in section 10(e) of the Act (12 U.S.C. 1430(e)).

* * * * *

§ 950.8 [Amended]

111. Amend paragraph (a) of § 950.8 by removing the words ''such member'' and adding, in their place, the words ''a member''.

§ 950.9 [Amended]

112. Amend paragraph (a)(1) of § 950.9 by removing the words ''950.4(c)'' and adding, in their place, the words ''950.2(c)''.

§ 950.11 [Amended]

113. Amend § 950.11, in the first sentence of paragraph (b)(1), by adding the words ''(12 U.S.C. 1426(b)(1))'' between the words ''6(b)(1) of the Act'' and the words ''is maintained''.

§ 950.14 [Amended]

114. Amend § 950.14 by revising paragraphs (b)(2)(i)(A), (b)(2)(i)(C), (c)(2)(i), (c)(2)(ii), (e)(2) and (e)(3) to read as follows:

§ 950.17 Advances to housing associates.

* * * * *

(b) * * *

(2) * * *

(i) * * *

(A) The collateral described in § 950.7(a)(1) or (2).

(B) * * *

(C) The other real estate-related collateral described in § 950.7(a)(4), provided that such collateral comprises mortgage loans on one-to-four family or multifamily residential property.

* * * * *

(c) * * *

(2) *Advance pricing.* (i) A Bank shall price advances to housing associates in accordance with the requirements for pricing advances to members set forth in § 950.3(b). Wherever the term ''member'' appears in § 950.3(b), the term shall be construed also to mean ''housing associate.''

(ii) A Bank shall apply the pricing criteria identified in § 950.5(b)(2) equally to all of its member and housing associate borrowers.

* * * * *

(e) * * *

(2) *Verification of eligibility.* A Bank may, from time to time, require a housing associate to provide evidence that it continues to satisfy all of the

eligibility requirements of the Act, this subpart and part 926 of this chapter.

(3) *Loss of eligibility.* A Bank shall not extend a new advance or renew an existing advance to a housing associate that no longer meets the eligibility requirements of the Act, this subpart and part 926 of this chapter until the entity has provided evidence satisfactory to the Bank that it is in compliance with such requirements.

§ 950.25 [Amended]

115. Amend paragraph (b) of § 950.25 by removing the words ''debtor/creditor'' and adding, in their place, the words ''creditor/debtor''.

PART 951—AFFORDABLE HOUSING PROGRAM

116. The authority citation for part 951 continues to read as follows:

Authority: 12 U.S.C. 1430(j).

117. Amend § 951.1:

a. By removing the definitions of the terms ''Advance'', ''AHP or Program'', ''CIP'', ''HUD'' and ''State''; and

b. By revising the definition of the word ''Habitable'' and adding, in correct alphabetical sequence, a definition for the word ''Program'' to read as follows:

§ 951.1 Definitions.

As used in this part:

* * * * *

Habitable means suitable for occupancy, taking into account local health, safety and building codes.

* * * * *

Program means the Affordable Housing Program.

* * * * *

§ 951.4 [Amended]

118. Amend paragraph (g) of § 951.4 by removing the words ''Council members'' and adding, in their place, the words ''Council members''.

§ 951.5 [Amended]

119. Amend § 951.5:

a. In paragraph (b)(2)(i)(A) of by adding a comma immediately following the words ''other sources'';

b. In paragraph (b)(7)(i), by removing the words ''951.13 (c)(4)'' and adding, in their place, the words ''951.3(c)(4)''; and

c. In paragraph (b)(7)(ii), by removing the words ''951.13 (c)(5)'' and adding, in their place, the words ''951.3(c)(5)''.

§ 951.9 [Amended]

120–121. Amend § 951.9, in the introductory text, by removing the words ''*Modification procedure.*''.

§ 951.10 [Amended]

122. Amend paragraph (c)(1) of § 951.10, in the introductory text, by italicizing (designating as a heading) the words ''Owner-occupied projects''.

§ 951.12 [Amended]

123. Amend paragraph (h) of § 951.12 by removing the words ''Procedures for Review of Disputed Supervisory Determinations'' and adding, in their place, the words ''procedures for review of disputed supervisory determinations set forth in § 907.9 of this chapter''.

§ 951.16 [Amended]

124. Amend § 950.16, in the first sentence, by adding the words ''(12 U.S.C. 1430(j))'' between the words ''of the Act'' and the words ''and the provisions''.

PART 952—COMMUNITY INVESTMENT CASH ADVANCE PROGRAMS

125. Amend the authority citation for part 952 by revising it to read as follows:

Authority: 12 U.S.C. 1422b(a)(1), 1430.

§§ 952.1, 952.2, 952.3 [Redesignated]

126. Redesignate §§ 952.1, 952.2 and 952.3 as §§ 952.2, 952.3 and 952.1, respectively.

§ 952.1 [Amended]

127. Amend newly designated § 952.1:

a. By removing the definitions of the terms ''Advance'', ''AHP'', ''CICA'', ''CIP'' and ''HUD'';

b. By moving the definition of ''Targeted community lending'' into the correct alphabetical sequence; and

c. In the definition of ''CICA program or Community Investment Cash Advance program'', by removing both references to ''§ 952.3'' and adding, in its place, references to ''§ 952.1''.

§ 952.2 [Amended]

128. Amend newly designated § 952.2:

a. In the first sentence, by adding the words ''(12 U.S.C. 1430(j)(10))'' between the words ''of the Act'' and the words ''authorizes the Banks''; and

b. By removing the words ''(See 12 U.S.C. 1430(j)(10))'' that immediately follow the first sentence.

129. Revise newly designated § 952.3 to read as follows:

§ 952.3 Purpose.

The purpose of this part is to identify targeted community lending projects that the Banks may support through the establishment of CICA programs under section 10(j)(10) of the Act (12 U.S.C. 1430(j)(10)). Pursuant to this part, a Bank may offer Rural Development Funding (RDF) or Urban Development Funding (UDF) programs, or both, for targeted community lending using the targeted beneficiaries or targeted income levels specified in § 952.1, without prior Finance Board approval. A Bank also may offer other CICA programs for targeted community lending using targeted beneficiaries and targeted income levels other than those specified in § 952.1, established by the Bank with the prior approval of the Finance Board. In addition, a Bank shall offer CICA programs under section 10(i) of the Act (12 U.S.C. 1430(i)) (Community Investment Program (CIP)) and section 10(j) of the Act (12 U.S.C. 1430(j)) (Affordable Housing Program (AHP)). A Bank may provide advances or grants under its CICA programs except for CIP programs, under which a Bank may only provide advances.

§ 952.5 [Amended]

130. Amend § 952.5:

a. In paragraph (a)(3), by removing the reference to ''§ 952.3'' and adding, in its place, a reference to ''§ 952.1'';

b. In paragraph (a)(4), by removing the reference to ''§ 952.3'' and adding, in its place, a reference to ''§ 952.1'';

c. In paragraph (d)(1), by removing the reference to ''§ 950.6'' and adding, in its place, a reference to ''§ 950.5'';

d. In paragraph (d)(4)(ii), by removing the reference to ''§ 950.24'' and adding, in its place, a reference to ''§ 950.17''; and

e. In paragraph (d)(6)(i), by removing the word ''fund'' and adding, in its place, the words ''Discount Fund''.

PART 955—ACQUIRED MEMBER ASSETS

131. The authority citation for part 955 continues to read as follows:

Authority: 12 U.S.C. 1422a(a)(3), 1422b(a), 1430, 1430b, 1431.

132. Revise § 955.1 to read as follows:

§ 955.1 Definitions.

As used in this part:

Affiliate means any business entity that controls, is controlled by, or is under common control with, a member.

Expected losses means the base loss scenario in the methodology of an NRSRO applicable to that type of AMA asset.

Residential real property has the meaning set forth in § 950.1 of this chapter.

§ 955.3 [Amended]

133–134. Amend § 955.3 by:

a. In paragraph (b)(2)(ii), by removing the word ''and'' that follows the semi-colon; and

b. In paragraph (b)(3), by adding the word ''and'' immediately following the semi-colon.

PART 956—INVESTMENTS

135. The authority citation for part 956 continues to read as follows:

Authority: 12 U.S.C. 1422a(a)(3), 1422b(a), 1429.

136. Revise § 956.1 to read as follows:

§ 956.1 Definitions.

As used in this part:

Deposits in banks or trust companies has the meaning set forth in § 965.1 of this chapter.

Derivative contract means generally a financial contract the value of which is derived from the values of one or more underlying assets, reference rates, or indices of asset values, or credit-related events. Derivative contracts include interest rate, foreign exchange rate, equity, precious metals, commodity, and credit contracts, and any other instruments that pose similar risks.

Investment grade means:

(1) A credit quality rating in one of the four highest credit rating categories by an NRSRO and not below the fourth highest credit rating category by any NRSRO; or

(2) If there is no credit quality rating by an NRSRO, a determination by a Bank that the issuer, asset or instrument is the credit equivalent of investment grade using credit rating standards available from an NRSRO or other similar standards.

Repurchase agreement means an agreement between a seller and a buyer whereby the seller agrees to repurchase a security or similar securities at an agreed upon price, with or without a stated time for repurchase.

§ 956.2 [Amended]

137. Amend § 956.2:

a. In paragraph (c), by removing the words ''the Federal National Mortgage Association or the Government National Mortgage Association'' and adding, in their place, the words ''Fannie Mae or Ginnie Mae''; and

b. In paragraph (d), by removing the words ''the Federal Home Loan Mortgage Corporation pursuant to 12 U.S.C. 1454 or 1455'' and adding, in their place, the words ''Freddie Mac pursuant to section 305 or 306 of the Federal Home Loan Mortgage Corporation Act (12 U.S.C. 1454 or 1455)''.

§ 956.3 [Amended]

138. Amend paragraph (a)(4)(iii) of § 956.3 by removing the words ''a NRSRO'' and adding, in their place, the words ''an NRSRO''.

§ 956.4 [Amended]

139. Amend the introductory text of § 956.4 by removing the words ''a NRSRO'' and adding, in their place, the words ''an NRSRO''.

§ 956.5 [Amended]

140. Amend § 956.5:

a. In paragraph (b), by removing the words ''12 CFR part 961'' and adding, in their place, the words ''part 960 of this chapter''; and

b. In paragraph (e), by removing the word ''Commitment'' and adding, in its place, the words ''Commitments''.

PART 960—[REMOVED]

141. Under the authority of 12 U.S.C. 1422b(a), part 960 is removed.

PART 961—[REDESIGNATED]

142. Part 961 is redesignated as part 960.

PART 960—STANDBY LETTERS OF CREDIT

143. The authority citation for newly designated part 960 continues to read as follows:

Authority: 12 U.S.C. 1422b, 1429, 1430, 1430b, 1431.

144. Amend newly designated § 960.1 by adding, in correct alphabetical sequence, a definition for the term ''Investment grade'' to read as follows:

§ 960.1 Definitions.

* * * * *

Investment grade means:

(1) A credit quality rating in one of the four highest credit rating categories by an NRSRO and not below the fourth highest credit rating category by any NRSRO; or

(2) If there is no credit quality rating by an NRSRO, a determination by a Bank that the issuer, asset or instrument is the credit equivalent of investment grade using credit rating standards available from an NRSRO or other similar standards.

* * * * *

§ 960.2 [Amended]

145. Amend paragraph (b) of newly designated § 960.2 by removing the reference to ''§ 961.4(a)(2)'' and adding, in its place, a reference to ''§ 960.4(a)(2)''.

§ 960.4 [Amended]

146. Amend paragraph (c) of newly designated § 960.4 by adding the words ''(12 U.S.C. 1430, 1430b)'' between the words ''of the Act'' and the words ''and part 950''.

§ 960.5 [Amended]

147. Amend paragraph (b)(1) of newly-designated § 960.5 by removing the words ''961.2 or 961.3'' and adding, in their place, the words ''960.2 or 960.3''.

PART 965—SOURCES OF FUNDS

148. Revise the authority citation for part 965 to read as follows:

Authority: 12 U.S.C. 1422a, 1422b, 1431.

§ 965.1 [Amended]

149. Amend the definition of ''Deposits in banks or trust companies'' in § 965.1:

a. In paragraph (3)(ii) by removing the words ''Federal Deposit Insurance Corporation'' and adding, in their place, the word ''FDIC''; and

b. In paragraph (3)(iii) by removing the words ''Board of Governors of the Federal Reserve System'' and adding, in their place, the word ''FRB''.

§ 965.2 [Amended]

150. Amend the paragraph (b) of § 965.2 by removing the words ''950.24(b)(2)(i)(B), 950.24(d) or 961.4(a)(1)'' and adding, in their place, the words ''950.17(b)(2)(i)(B), 950.17(d) or 960.4(a)(1)''.

PART 966—CONSOLIDATED OBLIGATIONS

151. Revise the authority citation for part 966 to read as follows:

Authority: 12 U.S.C. 1422a, 1422b, 1431.

152. Revise § 966.1 to read as follows:

§ 966.1 Definitions.

As used in this part:

Non-complying Bank means a Bank that has failed to provide the liquidity certification as required under § 966.9(b)(1).

§ 966.2 [Amended]

153. Amend § 966.2:

a. In paragraph (a), in the last sentence, by removing the words ''of the Finance Board'' that follow the words ''Board of Directors''; and

b. In paragraph (b)(2) by removing the words ''part 985'' and, adding, in thier place, the words ''part 985 of this chapter''.

§ 966.3 [Amended]

154–155. Amend paragraph (a)(1) of § 966.3, in the last sentence, by removing the words ''12 U.S.C. 1431(g)'' and adding, in their place, the words ''section 11(g) of the Act (12 U.S.C. 1431(g))''.

§ 966.8 [Amended]

156. Amend paragraph (a) of § 966.8 by removing the word ''OF'' and adding, in its place, the words ''Office of Finance''.

§ 966.10 [Amended]

157. Amend § 966.10 by adding the words ''(12 U.S.C. 1431)'' between the words ''of the Act'' and the words ''and pursuant to this part''.

PART 975—COLLECTION, SETTLEMENT, AND PROCESSING OF PAYMENT INSTRUMENTS

158. The authority citation for part 975 continues to read as follows:

Authority: 12 U.S.C. 1430, 1431.

159. Redesignate §§ 975.1 and 975.2 as §§ 975.2 and 975.1, respectively.

160. Revise newly designated § 975.1 to read as follows:

§ 975.1 Definitions.

(a) Unless otherwise defined in this part, the terms used in this part shall conform, in the following order, to: Regulations of the Finance Board, the Uniform Commercial Code, regulations of the Federal Reserve System, and general banking usage.

(b) As used in this part:

Account processing includes charging, crediting, and settling of member or eligible institution accounts, excluding individual customer accounts.

Assets includes furniture and equipment, leasehold improvements, and capitalized start-up costs.

Data communication means transmitting and receiving of data to or from Banks, Federal Reserve offices, clearinghouse associations, depository institutions or their service bureaus, and other direct sending entities, arrangement for delivery of information; and telephone inquiry service.

Data processing includes capture, storage, and assembling of, and computation of, data from payment instruments received from Federal Reserve offices, Banks, clearinghouse associations, depository institutions, and other direct lending entities.

Eligible institution means any institution that is eligible to make application to become a member of a Bank under section 4 of the Act (12 U.S.C. 1424), including any building and loan association, savings and loan association, cooperative bank, homestead association, insurance company, savings bank, or any insured depository institution (as defined in section 2(12) of the Act (12 U.S.C. 1422(12))), regardless of whether the institution applies for or would be approved for membership.

Issuance of forms means the designation and distribution of standardized forms for use in collection, processing, and settlement services.

Presentment means a demand for acceptance or payment made upon the maker, acceptor, drawee or other payor by or on behalf of the holder, and may involve the use of electronic transmission of an instrument or item or transmission of data from the instrument or item by electronic or mechanical means.

Statement packaging includes receiving statement information from members or eligible institutions or their service bureaus on respective customer cycle dates; printing statements; matching customer account statements; packaging the statements with appropriate items and informational materials, as authorized by individual members and eligible institutions, for distribution to their customers; sending the packages to the members or eligible institutions or mailing the packages directly to their customers.

Storage services includes filing, storage, and truncation of items.

Transportation of items includes transporting items from Federal Reserve offices, other Banks' clearinghouse associations, depository institutions, and other direct sending entities to a Bank; forwarding items to financial institutions after sorting and forwarding cash items or return items to Federal Reserve offices and other sending entities.

§ 975.2 [Amended]

161. Amend newly designated § 975.2:

a. In paragraph (a) by removing the words ''(12 U.S.C. 1431(e)(2)) (Bank Act)'' and adding, in their place, the words ''(12 U.S.C. 1431(e)(2))''; and

b. In paragraph (b) by:

i. Removing the words ''Bank Act'' and adding, in their place, the word ''Act''; and

ii. Adding the words ''(12 U.S.C. 1431(e)(2))'' between the words ''of the Act'' and the words ''shall be governed''.

162–163. Revise § 975.3 to read as follows:

§ 975.3 General provisions.

The Banks are authorized to:

(a) Engage in, be agents or intermediaries for, or otherwise participate or assist in, the processing, collection, and settlement of checks, drafts, or any other negotiable or nonnegotiable items and instruments of payment drawn on eligible institutions or Bank members; and

(b) Be drawees of checks, drafts, and other negotiable and nonnegotiable items and instruments issued by eligible institutions or Bank members.

§ 975.4 [Amended]

164. Amend § 975.4, in the introductory text, by removing the words '', as defined in § 975.2''.

PART 978—BANK REQUESTS FOR INFORMATION

165. The authority citation for part 978 continues to read as follows:

Authority: 12 U.S.C. 1422b(a), 1442.

166. Amend § 978.1 by revising the definition of ''Financial regulatory agency'' to read as follows:

§ 978.1 Definitions.

* * * * *

Financial regulatory agency means any of the following:

(1) The Department of the Treasury, including either the OCC or the OTS;

(2) The FRB;

(3) The NCUA; or

(4) The FDIC.

* * * * *

§ 978.2 [Amended]

167. Amend § 978.2 by removing the words ''of the Act, 12 U.S.C. 1442'' and adding, in their place, the words ''of the Act (12 U.S.C. 1442)''.

§ 978.4 [Amended]

168. Amend § 978.4, in the second sentence, by removing the words ''of the Act, 12 U.S.C. 1442, as amended,'' and adding, in their place, the words ''of the Act (12 U.S.C. 1442)''.

§ 978.7 [Amended]

169. Amend § 978.7 by removing the words ''of the Act, 12 U.S.C. 1440'' from paragraph (d)(1) and adding, in their place, the words ''of the Act (12 U.S.C. 1440)''.

PART 980—NEW BUSINESS ACTIVITIES

170. The authority citation for part 980 continues to read as follows:

Authority: 12 U.S.C. 1422a(a)(3), 1422b(a), 1431(a), 1432(a).

§ 980.3 [Amended]

171. Amend § 980.3:

a. In paragraph (a)(3)(iii), by adding the word ''and'' immediately after the semi-colon; and

b. In paragraph (a)(3)(iv), by removing the word ''and'' that immediately follows the semi-colon.

PART 985—THE OFFICE OF FINANCE

172. An authority citation for part 985 is added to read as follows:

Authority: 12 U.S.C. 1422b(b)(2), 1431(a), 1431(c), 1432(a).

173. Revise § 985.1 to read as follows:

§ 985.1 Definitions.

As used in this part:

Chair means the chairperson of the board of directors of the Office of Finance.

Managing Director means the managing director of the Office of Finance.

§ 985.3 [Amended]

174. Amend paragraph (d) of § 985.3 by removing the word ''(REFCorp)'' and adding, in its place, the word ''(REFCORP)''.

§ 985.6 [Amended]

175. Amend paragraph (d) of § 985.6 by removing the words ''Nationally Recognized Statistical Rating Organizations'' and adding, in their place, the words ''NRSROs''.

§ 985.8 [Amended]

176. Amend paragraph (d)(4)(i) of § 985.8 by removing the reference to ''§ 917.6'' and adding, in its place, a reference to ''§ 917.7''.

PART 987—BOOK-ENTRY PROCEDURE FOR CONSOLIDATED OBLIGATIONS

177. The authority citation for part 987 continues to read as follows:

Authority: 12 U.S.C. 1422a, 1422b, 1431, 1435.

178. Amend § 987.1 by:

a. Removing the definition of the word ''State''; and

b. Revising the introductory text and the definition of the term ''Office of Finance'' to read as follows:

§ 987.1 Definitions.

As used in this part, unless the context otherwise requires or indicates:

* * * * *

Office of Finance means the Office of Finance acting as agent of the Banks in all matters relating to the issuance of Book-entry consolidated obligations and in the performance of all other necessary and proper functions relating to Book-entry consolidated obligations, including the payment of principal and interest due thereon.

* * * * *

§ 987.5 [Amended]

179. Amend paragraph (a) of § 987.5, in the second sentence, by removing the word ''a'' that appears between the words ''Security Entitlement or to'' and the words ''Book-entry consolidated obligations''.

PART 989—FINANCIAL STATEMENTS OF THE BANKS

180. Revise the authority citation for part 989 to read as follows:

Authority: 12 U.S.C. 1422a, 1422b, 1426, 1431, 1440.

181. Amend § 989.1 by revising the introductory text and the definition of ''Audit'' to read as follows:

§ 989.1 Definitions.

As used in this part:

Audit means an examination of the financial statements by an independent accountant in accordance with Generally Accepted Auditing Standards for the purpose of expressing an opinion thereon.

* * * * *

PART 995—FINANCING CORPORATION OPERATIONS

182. Revise the authority citation for part 995 to read as follows:

Authority: 12 U.S.C. 1441(b)(8), (c), (j).

183. Revise § 995.1 to read as follows:

§ 995.1 Definitions.

As used in this part:

Administrative expenses:

(1) Include general office and operating expenses such as telephone and photocopy charges, printing, legal, and professional fees, postage, courier services, and office supplies; and

(2) Do not include any form of employee compensation, custodian fees, issuance costs, or any interest on (and any redemption premium with respect to) any Financing Corporation obligations.

BIF-assessable deposit means a deposit that is subject to assessment for purposes of the Bank Insurance Fund under the Federal Deposit Insurance Act (12 U.S.C. 1811 *et seq.*), including a deposit that is treated as a deposit insured by the Bank Insurance Fund under section 5(d)(3) of the Federal Deposit Insurance Act (12 U.S.C. 1815(d)(3)).

Custodian fees means any fee incurred by the Financing Corporation in connection with the transfer of any security to, or maintenance of any security in, the segregated account established under section 21(g)(2) of the Act (12 U.S.C. 1441(g)(2)), and any other expense incurred by the Financing Corporation in connection with the establishment or maintenance of such account.

Directorate means the board established under section 21(b) of the Act (12 U.S.C. 1441(b)) to manage the Financing Corporation.

Exit fees means the amounts paid under sections 5(d)(2)(E) and (F) of the Federal Deposit Insurance Act (12 U.S.C. 1815(d)(2)(E) and (F)), and regulations promulgated thereunder (12 CFR part 312).

Insured depository institution has the same meaning as in section 3 of the Federal Deposit Insurance Act (12 U.S.C. 1813).

Issuance costs means issuance fees and commissions incurred by the Financing Corporation in connection with the issuance or servicing of Financing Corporation obligations, including legal and accounting expenses, trustee, fiscal, and paying agent charges, securities processing charges, joint collection agent charges, advertising expenses, and costs incurred in connection with preparing and printing offering materials to the extent the Financing Corporation incurs such costs in connection with issuing any obligations.

Non-administrative expenses means custodian fees, issuance costs, and interest on Financing Corporation obligations.

Obligations means debentures, bonds, and similar debt securities issued by the Financing Corporation under sections 21(c)(3) and (e) of the Act (12 U.S.C. 1421(c)(3) and (e)).

Receivership proceeds means the liquidating dividends and payments made on claims received by the Federal Savings and Loan Insurance Corporation Resolution Fund established under section 11A of the Federal Deposit Insurance Act (12 U.S.C. 1821a) from receiverships, that are not required by the Resolution Funding Corporation to provide funds for the Funding Corporation Principal Fund established under section 21B of the Act (12 U.S.C. 1441b).

SAIF-assessable deposit means a deposit that is subject to assessment for purposes of the Savings Association Insurance Fund under the Federal Deposit Insurance Act, including a deposit that is treated as a deposit insured by the Savings Association Insurance Fund under section 5(d)(3) of the Federal Deposit Insurance Act (12 U.S.C. 1815(d)(3)).

§ 995.3 [Amended]

184. Amend § 995.3, in the first sentence, by adding the words ''(12 U.S.C. 1441(g))'' between the words ''of the Act'' and the period.

§ 995.4 [Amended]

185. Amend paragraph (b) of § 995.4:

a. In the first sentence, by removing the word ''securities'' and, in its place, adding the words ''consolidated obligations''; and

b. In the second sentence, by removing the reference to ''part 912'' and, in its place, adding a reference to ''part 987''.

§ 995.7 [Amended]

186. Amend paragraph (b) of § 995.7, in the first sentence, by adding the words ''(12 U.S.C. 1441(b)(7)(B))'' between the words ''of the Act'' and the period.

§ 995.8 [Amended]

187. Amend § 995.8:

a. In paragraph (b)(2)(i), by adding the words ''(12 U.S.C. 1441(f)(2))'' between the words ''of the Act'' and the words ''and paragraph (b)(1)'';

b. In paragraph (b)(3)(i), by adding the words ''(12 U.S.C. 1441(f)(2))'' between the words ''of the Act'' and the words ''and paragraph (b)(1)'';

c. In paragraph (b)(3)(ii), by adding the words ''(12 U.S.C. 1441(f)(2))'' between the words ''of the Act'' and the words ''and paragraph (b)(1)'';

d. In paragraph (c)(1), by adding the words ''(12 U.S.C. 1441(f)(3))'' between the words ''of the Act'' and the period; and

e. In paragraph (d)(1), by adding the words ''(12 U.S.C. 1815(d)(2)(E))'' between the words ''Federal Deposit Insurance Act'' and the words ''or as otherwise''.

§ 995.10 [Amended]

188–190. Amend § 995.10 by adding the words ''(12 U.S.C. 1441)'' between the words ''of the Act'' and the words ''and this part''.

PART 996—AUTHORITY FOR BANK ASSISTANCE OF THE RESOLUTION FUNDING CORPORATION

191. The authority citation for part 996 continues to read as follows:

Authority: 12 U.S.C. 1422a, 1422b.

192a. Redesignate §§ 996.1 and 996.2 as §§ 996.2 and 996.3, respectively; and

192b. Add and reserve a new § 996.1.

§ 996.2 [Amended]

193. Amend newly designated § 996.2 by:

a. Adding the words ''(12 U.S.C. 1441b(b))'' between the words ''of the Act'' and the words '', officers, employees, or agents''; and

b. Adding the words ''(12 U.S.C. 1441b(c)(6)(B))'' between the words ''of the Act'' and the period.

§ 996.3 [Amended]

194. Amend newly designated § 996.3 by:

a. Removing the words ''(''SAIF member'')''; and

b. Adding the words ''(12 U.S.C. 1441b(e)(7))'' between the words ''of the Act'' and the period.

PART 997—RESOLUTION FUNDING CORPORATION OBLIGATIONS OF THE BANKS

195. Revise the authority citation for part 997 to read as follows:

Authority: 12 U.S.C. 1422b(a) and 1441b(f).

§ 997.1 [Amended]

196. Amend § 997.1:

a. In the definition of ''Quarterly present-value determination'', by removing the words ''requirements of 12 U.S.C. 1441b(f)(2)(C)(ii)'' and adding, in their place, the words ''requirements of section 21B(f)(2)(C)(ii) of the Act (12 U.S.C. 1441b(f)(2)(C)(ii))''; and

b. By removing the definition of ''REFCORP''.

Dated: February 13, 2002.

By the Board of Directors of the Federal Housing Finance Board.

John T. Korsmo,

Chairman.

[FR Doc. 02–5462 Filed 3–19–02; 8:45 am]

BILLING CODE 6725–01–P

DEPARTMENT OF TRANSPORTATION

Federal Aviation Administration

14 CFR Part 39

[Docket No. 2002–SW–09–AD; Amendment 39–12681; AD 2002–03–52]

RIN 2120–AA64

Airworthiness Directives; Eurocopter France Model AS350B, AS350BA, AS350B1, AS350B2, AS350B3, AS350C, AS350D, AS350D1, AS355E, AS355F, AS355F1, AS355F2, AS355N, and EC130 B4 Helicopters

AGENCY: Federal Aviation Administration, DOT.

ACTION: Final rule; request for comments.

SUMMARY: This document publishes in the **Federal Register** an amendment adopting Airworthiness Directive (AD) 2002–03–52, sent previously to all known U.S. owners and operators of Eurocopter France (ECF) helicopters by individual letters. This AD requires checking for a gap between the adhesive bead and the metal bushing bonded on each STARFLEX star arm end (arm end) and, if a gap is found, replacing the STARFLEX with an airworthy part. This AD is prompted by reports of bonding failure between the metal bushing and the arm end that led to severe vibrations resulting in several emergency landings. The actions specified in this AD are intended to detect bonding failure between the metal bushing and each arm end, severe lateral vibrations, and subsequent loss of control of the helicopter.

DATES: Effective April 4, 2002.

Comments for inclusion in the Rules Docket must be received on or before April 19, 2002.

ADDRESSES: Submit comments in triplicate to the Federal Aviation Administration (FAA), Office of the Regional Counsel, Southwest Region, Attention: Rules Docket No. 2002–SW–09–AD, 2601 Meacham Blvd., Room 663, Fort Worth, Texas 76137. You may also send comments electronically to the Rules Docket at the following address: *9-asw-adcomments@faa.gov.*

FOR FURTHER INFORMATION CONTACT: Gary Roach, Aviation Safety Engineer, FAA, Rotorcraft Directorate, Rotorcraft Standards Staff, Fort Worth, Texas 76193–0111, telephone (817) 222–5130, fax (817) 222–5961.

SUPPLEMENTARY INFORMATION: On February 6, 2002, the FAA issued Emergency AD (EAD) 2002–02–51, which required checking for a gap between the adhesive bead and the metal bushing on each arm end and, if a gap was found, replacing the STARFLEX. After issuing that EAD, we discovered the inadvertent omission of a STAFFLEX part number (P/N) from the applicability. That omission created an undue economic burden to the owners and operators of a significant percentage of the affected helicopters. That omission could have also created confusion to the personnel checking this flight critical part because there are a number of different STARFLEX configurations installed on the affected model helicopters. This condition, if not corrected, could have resulted in failure of the operators to properly conduct the check, failure to detect a gap between the adhesive bead and the metal bushing on the arm end, severe lateral vibrations, and subsequent loss of control of the helicopter. Therefore, to eliminate any confusion, the FAA issued superseding EAD 2002–03–52 on February 8, 2002, which contains the same requirements as EAD 2002–02–51 but limits the applicability of this AD to those helicopters that have STARFLEX, P/N 350A31–1916–00, installed.

The Direction Generale De L'Aviation Civile (DGAC), the airworthiness authority for France, notified the FAA that an unsafe condition may exist on these helicopter models. The DGAC advises of several occurrences of rapid bonding failure of the metal bushing installed on the arm ends, severe vibrations, and some emergency landings.

ECF has issued Alert Telex Nos. 05.00.38, 05.00.37R1, and 05.A.001R1, dated November 13, 2001 (Telex). The Telex specifies checking for a gap between the adhesive bead and the metal bushing bonded on each arm end. ECF is currently analyzing modifications to this assembly. The DGAC classified this Telex as mandatory and issued AD Nos. 2001–557–086(A) R1, 2001–558–064(A) R1, and 2001–559–002(A) R1, all dated November 28, 2001, to ensure the continued airworthiness of these helicopters in France.

These helicopter models are manufactured in France and are type certificated for operation in the United States under the provisions of 14 CFR 21.29 and the applicable bilateral agreement. Pursuant to the applicable bilateral agreement, the DGAC has kept the FAA informed of the situation described above. The FAA has examined the findings of the DGAC, reviewed all available information, and determined that AD action is necessary for products of these type designs that are certificated for operation in the United States.

This unsafe condition is likely to exist or develop on other helicopters of the same type designs registered in the United States. Therefore, the FAA issued Emergency AD 2002–03–52 to require, at specified intervals, checking for a gap between the adhesive bead and the metal bushing bonded on each of the arm ends and, if a gap is found, before further flight, replacing any STARFLEX with an airworthy part.

The short compliance time involved is required because the previously described critical unsafe condition can adversely affect the controllability or structural integrity of the helicopter. Therefore, checking for a gap between the adhesive bead and the metal bushing is required before each start of the engines and thereafter at intervals not to exceed 4 hours time-in-service, and this AD must be issued immediately.

An owner/operator (pilot) may perform the visual check required by paragraph (a) of this AD and must enter compliance with this AD into the helicopter maintenance records in accordance with 14 CFR 43.11 and 91.417(a)(2)(v). This AD allows a pilot to perform this check because it involves only a visual check for a gap between the adhesive bead and the metal bushing on each arm end and can be performed equally well by a pilot or a mechanic.

Since it was found that immediate corrective action was required, notice and opportunity for prior public comment thereon were impracticable and contrary to the public interest, and good cause existed to make the AD immediately effective by individual letters issued on February 8, 2002, to all known U.S. owners and operators of these helicopters. These conditions still exist, and the AD is hereby published in the **Federal Register** as an amendment to 14 CFR 39.13 to make it effective to all persons.

The FAA estimates that 30 helicopters will be affected by this AD, that it will take approximately 0.1 work hour to inspect the adhesive bead of the metal bushing bonded on each arm end, and that the average labor rate is $60 per work hour. Based on these figures, the total cost impact of the AD on U.S. operators is estimated to be $6 per helicopter and $180 for one inspection of the fleet. Assuming 10 additional inspections per week for all helicopters, the fleet cost per year will be $93,600.

Comments Invited

Although this action is in the form of a final rule that involves requirements affecting flight safety and, thus, was not preceded by notice and an opportunity for public comment, comments are invited on this rule. Interested persons are invited to comment on this rule by submitting such written data, views, or arguments as they may desire. Communications should identify the Rules Docket number and be submitted in triplicate to the address specified under the caption **ADDRESSES.** All communications received on or before the closing date for comments will be considered, and this rule may be amended in light of the comments received. Factual information that supports the commenter's ideas and suggestions is extremely helpful in evaluating the effectiveness of the AD action and determining whether additional rulemaking action would be needed.

Comments are specifically invited on the overall regulatory, economic, environmental, and energy aspects of the rule that might suggest a need to modify the rule. All comments submitted will be available in the Rules Docket for examination by interested persons. A report that summarizes each FAA-public contact concerned with the substance of this AD will be filed in the Rules Docket.

Commenters wishing the FAA to acknowledge receipt of their mailed comments submitted in response to this rule must submit a self-addressed, stamped postcard on which the following statement is made: ''Comments to Docket No. 2002–SW–09–AD.'' The postcard will be date stamped and returned to the commenter.

The regulations adopted herein will not have a substantial direct effect on the States, on the relationship between the national Government and the States, or on the distribution of power and responsibilities among the various levels of government. Therefore, it is determined that this final rule does not have federalism implications under Executive Order 13132.

The FAA has determined that this regulation is an emergency regulation that must be issued immediately to correct an unsafe condition in aircraft, and that it is not a ''significant regulatory action'' under Executive Order 12866. It has been determined further that this action involves an emergency regulation under DOT Regulatory Policies and Procedures (44 FR 11034, February 26, 1979). If it is determined that this emergency regulation otherwise would be significant under DOT Regulatory Policies and Procedures, a final regulatory evaluation will be prepared and placed in the Rules Docket. A copy of it, if filed, may be obtained from the Rules Docket at the location provided under the caption **ADDRESSES.**

List of Subjects in 14 CFR Part 39

Air transportation, Aircraft, Aviation safety, Safety.

Adoption of the Amendment

Accordingly, pursuant to the authority delegated to me by the Administrator, the Federal Aviation Administration amends part 39 of the Federal Aviation Regulations (14 CFR part 39) as follows:

PART 39—AIRWORTHINESS DIRECTIVES

1. The authority citation for part 39 continues to read as follows:

Authority: 49 U.S.C. 106(g), 40113, 44701.

§ 39.13 [Amended]

2. Section 39.13 is amended by adding a new airworthiness directive to read as follows:

2002–03–52 Eurocopter France: Amendment 39–12681. Docket No. 2002–SW–09–AD. Supersedes Emergency AD 2002–02–51, Docket No. 2002–SW–02–AD.

Applicability: Model AS350B, AS350BA, AS350B1, AS350B2, AS350B3, AS350C, AS350D, AS350D1, AS355E, AS355F, AS355F1, AS355F2, AS355N, and EC130 B4 helicopters, with STARFLEX, part number 350A31–1916–00, installed, certificated in any category.

Note 1: This AD applies to each helicopter identified in the preceding applicability

provision, regardless of whether it has been otherwise modified, altered, or repaired in the area subject to the requirements of this AD. For helicopters that have been modified, altered, or repaired so that the performance of the requirements of this AD is affected, the owner/operator must request approval for an alternative method of compliance in accordance with paragraph (d) of this AD. The request should include an assessment of the effect of the modification, alteration, or repair on the unsafe condition addressed by this AD; and if the unsafe condition has not been eliminated, the request should include specific proposed actions to address it.

Compliance: Required before each start of the engines and thereafter at intervals not to exceed 4 hours time-in-service.

To detect bonding failure between the metal bushing and each STARFLEX star arm end (arm end), which could result in severe lateral vibrations and subsequent loss of control of the helicopter, accomplish the following:

(a) Check for a gap between the adhesive bead and the metal bushing bonded on each of the three arm ends.

Note 2: Alert Telex Nos. 05.00.38, 05.00.37 R1, and 05.A.001 R1, dated November 13, 2001, pertain to the subject of this AD.

(b) An owner/operator (pilot) may perform the visual check required by paragraph (a) of this AD and must enter compliance with this AD into the helicopter maintenance records in accordance with 14 CFR 43.11 and 91.417(a)(2)(v). This AD allows a pilot to perform this check because it involves only a visual check for a gap between the adhesive bead and the bushing on each arm end and can be performed equally well by a pilot or a mechanic.

(c) If you find a gap between the adhesive bead and the metal bushing, replace the STARFLEX with an airworthy part before further flight.

(d) An alternative method of compliance or adjustment of the compliance time that provides an acceptable level of safety may be used if approved by the Manager, Regulations Group, Rotorcraft Directorate, FAA. Operators shall submit their requests through an FAA Principal Maintenance Inspector, who may concur or comment and then send it to the Manager, Regulations Group.

Note 3: Information concerning the existence of approved alternative methods of compliance with this AD, if any, may be obtained from the Regulations Group.

(e) Special flight permits will not be issued.

(f) This amendment becomes effective on April 4, 2002.

Note 4: The subject of this AD is addressed in Direction Generale De L'Aviation Civile (France) AD Nos. 2001–557–086(A) R1, 2001–558–064(A) R1, and 2001–559–002(A) R1, all dated November 28, 2001.

Issued in Fort Worth, Texas, on March 11, 2002.

David A. Downey,

Manager, Rotorcraft Directorate, Aircraft Certification Service.

[FR Doc. 02–6627 Filed 3–19–02; 8:45 am]

BILLING CODE 4910–13–U

DEPARTMENT OF TRANSPORTATION

Federal Aviation Administration

14 CFR Part 39

[Docket No. 2001–SW–20–AD; Amendment 39–12680; AD 2002–06–04]

RIN 2120–AA64

Airworthiness Directives; Eurocopter France Model AS350B, AS350B1, AS350B2, AS350B3, AS350BA, AS350C, AS350D, AS350D1, AS355E, AS355F, AS355F1, AS355F2, and AS355N Helicopters

AGENCY: Federal Aviation Administration, DOT.

ACTION: Final rule.

SUMMARY: This amendment adopts a new airworthiness directive (AD) for specified Eurocopter France (ECF) helicopters that requires replacing the tail rotor hub pitch change plate ''SNR'' bearing (bearing). This amendment is prompted by fatigue cracks found in the bearings. The actions specified by this AD are intended to prevent seizure of the bearing, loss of tail rotor effectiveness, and subsequent loss of control of the helicopter.

DATES: Effective April 24, 2002.

FOR FURTHER INFORMATION CONTACT: Jim Grigg, Aviation Safety Engineer, FAA, Rotorcraft Directorate, Rotorcraft Standards Staff, Fort Worth, Texas 76193–0110, telephone (817) 222–5490, fax (817) 222–5961.

SUPPLEMENTARY INFORMATION: A proposal to amend 14 CFR part 39 to include an AD for ECF Model AS350B, AS350B1, AS350B2, AS350B3, AS350BA, AS350C, AS350D, AS350D1, AS355E, AS355F, AS355F1, AS355F2, and AS355N helicopters was published in the **Federal Register** on November 28, 2001 (66 FR 59375). That action proposed replacing each bearing with an airworthy bearing at specified intervals. Also, that action noted that transferring a bearing from one model to another is permissible by complying with the transfer rules described in the Master Servicing Recommendations Chapter 05.99.

Interested persons have been afforded an opportunity to participate in the making of this amendment. No comments were received on the proposal or the FAA's determination of the cost to the public. The FAA has determined that air safety and the public interest require the adoption of the rule as proposed.

The FAA estimates that 514 helicopters of U.S. registry will be affected by this AD, that it will take approximately 5 work hours per helicopter to accomplish the required actions, and that the average labor rate is $60 per work hour. Required parts will cost approximately $90 per helicopter. Based on these figures, the total cost impact of the AD on U.S. operators is estimated to be $200,460.

The regulations adopted herein will not have a substantial direct effect on the States, on the relationship between the national Government and the States, or on the distribution of power and responsibilities among the various levels of government. Therefore, it is determined that this final rule does not have federalism implications under Executive Order 13132.

For the reasons discussed above, I certify that this action (1) is not a ''significant regulatory action'' under Executive Order 12866; (2) is not a ''significant rule'' under DOT Regulatory Policies and Procedures (44 FR 11034, February 26, 1979); and (3) will not have a significant economic impact, positive or negative, on a substantial number of small entities under the criteria of the Regulatory Flexibility Act. A final evaluation has been prepared for this action and it is contained in the Rules Docket. A copy of it may be obtained from the Rules Docket at the Office of the Regional Counsel, Southwest Region, 2601 Meacham Blvd., Room 663, Fort Worth, Texas.

List of Subjects in 14 CFR Part 39

Air transportation, Aircraft, Aviation safety, Safety.

Adoption of the Amendment

Accordingly, pursuant to the authority delegated to me by the Administrator, the Federal Aviation Administration amends 14 CFR part 39 as follows:

PART 39—AIRWORTHINESS DIRECTIVES

1. The authority citation for part 39 continues to read as follows:

Authority: 49 U.S.C. 106(g), 40113, 44701.

§ 39.13 [Amended]

2. Section 39.13 is amended by adding a new airworthiness directive to read as follows:

2002–06–04 Eurocopter France: Amendment 39–12680. Docket No. 2001–SW–20–AD.

Applicability: Model AS350B, AS350B1, AS350B2, AS350B3, AS350BA, AS350C, AS350D, AS350D1, AS355E, AS355F, AS355F1, AS355F2, and AS355N helicopters, with tail rotor hub pitch change plate ''SNR'' bearing (bearing) part number (P/N) 6010F234M16 (Eurocopter France P/N

704A33–651–190), installed, certificated in any category.

Note 1: This AD applies to each helicopter identified in the preceding applicability provision, regardless of whether it has been otherwise modified, altered, or repaired in the area subject to the requirements of this AD. For helicopters that have been modified, altered, or repaired so that the performance of the requirements of this AD is affected, the owner/operator must request approval for an alternative method of compliance in accordance with paragraph (d) of this AD. The request should include an assessment of the effect of the modification, alteration, or repair on the unsafe condition addressed by this AD; and if the unsafe condition has not been eliminated, the request should include specific proposed actions to address it.

Compliance: Required as indicated, unless accomplished previously.

To prevent seizure of the bearing, loss of tail rotor effectiveness, and subsequent loss of control of the helicopter, accomplish the following:

(a) For Model AS350B3 and AS355N helicopters, replace each bearing with an airworthy bearing as follows:

(1) Within 30 hours time-in-service (TIS) for each bearing that has 270 or more hours TIS as of the effective date of this AD.

(2) Before reaching 300 hours TIS for each bearing that has less than 270 hours TIS as of the effective date of this AD.

(3) Thereafter, replace each bearing at intervals not to exceed 300 hours TIS.

(b) For all other Model AS350 or AS355 helicopters, replace each bearing with an airworthy bearing as follows:

(1) Within 50 hours TIS for each bearing that has 1150 hours or more TIS as of the effective date of this AD.

(2) Before reaching 1200 hours TIS for each bearing that has less than 1150 hours TIS as of the effective date of this AD.

(3) Thereafter, replace each bearing at intervals not to exceed 1200 hours TIS.

Note 2: Eurocopter France Alert Telex Nos. 01.00.46 and 01.00.48, both dated February 22, 2001, pertain to the subject of this AD.

(c) When transferring a bearing from one model helicopter to another (refer to the equipment log card), adhere to the transfer rules described in the applicable master servicing recommendations. Remove each bearing from service at or before the service life limits given in paragraphs (a)(3) and (b)(3) of this AD.

Note 3: The Master Servicing Recommendations for the affected helicopters, Chapter 05.99, pertain to the subject of this AD.

(d) An alternative method of compliance or adjustment of the compliance time that provides an acceptable level of safety may be used if approved by the Manager, Regulations Group, Rotorcraft Directorate, FAA. Operators shall submit their requests through an FAA Principal Maintenance Inspector, who may concur or comment and then send it to the Manager, Regulations Group.

Note 4: Information concerning the existence of approved alternative methods of compliance with this AD, if any, may be obtained from the Regulations Group.

(e) Special flight permits may be issued in accordance with 14 CFR 21.197 and 21.199 to operate the helicopter to a location where the requirements of this AD can be accomplished.

Note 5: The subject of this AD is addressed in Direction Generale De L'Aviation Civile (France) AD Nos. 2001–073–061(A) and 2001–074–081(A), both dated March 21, 2001.

(f) This amendment becomes effective on April 4, 2002.

Issued in Fort Worth, Texas, on March 11, 2002.

David A. Downey,

Manager, Rotorcraft Directorate, Aircraft Certification Service.

[FR Doc. 02–6626 Filed 3–19–02; 8:45 am]

BILLING CODE 4910–13–U

DEPARTMENT OF TRANSPORTATION

Federal Aviation Administration

14 CFR Part 39

[Docket No. 2001–NE–20; Amendment 39–12641; AD 2002–02–13]

RIN 2120–AA64

Airworthiness Directives; CFM International, S.A. CFM56–5 Series Turbofan Engines; Correction

AGENCY: Federal Aviation Administration, DOT.

ACTION: Final rule; correction.

SUMMARY: This document makes a correction to Airworthiness Directive (AD) 2002–02–13, applicable to CFM International, S.A. CFM56–5 series turbofan engines that was published in the **Federal Register** on February 14, 2002 (67 FR 6850). The Amendment number is incorrect and this document corrects that number. In all other respects, the original document remains the same.

EFFECTIVE DATE: March 21, 2002.

FOR FURTHER INFORMATION CONTACT: James Rosa, Aerospace Engineer, Engine Certification Office, FAA, Engine and Propeller Directorate, 12 New England Executive Park, Burlington, MA 01803–5299; telephone (781) 238–7152, fax (781) 238–7199.

SUPPLEMENTARY INFORMATION: A final rule airworthiness directive applicable to CFM International, S.A. CFM56–5 series turbofan engines, was published in the **Federal Register** on February 14, 2002 (67 FR 6850). The following correction is needed:

On page 6850, in the first column, the Amendment No. in the fifth line of the Heading is corrected to read ''Amendment 39–12641.''

PART 39—[CORRECTED]

§ 39.13 [Corrected]

On page 6851, in the third column, in the heading of the AD, in the second line, correct ''Amendment 39–12461'' to read ''Amendment 39–12641''.

Issued in Burlington, MA, on March 12, 2002.

Francis A. Favara,

Acting Manager, Engine and Propeller Directorate, Aircraft Certification Service.

[FR Doc. 02–6530 Filed 3–19–02; 8:45 am]

BILLING CODE 4910–13–U

DEPARTMENT OF TRANSPORTATION

Federal Aviation Administration

14 CFR Part 39

[Docket No. 2000–NE–02; Amendment 39–12640; AD 2002–02–12]

RIN 2120–AA64

Airworthiness Directives; Rolls-Royce plc RB211–524G and –524H Series Turbofan Engines; Correction

AGENCY: Federal Aviation Administration, DOT.

ACTION: Final rule; correction.

SUMMARY: This document makes a correction to Airworthiness Directive (AD) 2002–02–12, applicable to Rolls-Royce plc (RR) RB211–524G and –524H series turbofan engines that was published in the **Federal Register** on February 14, 2002 (67 FR 6859). The Amendment number is incorrect and this document corrects that number. In all other respects, the original document remains the same.

EFFECTIVE DATE: March 21, 2002.

FOR FURTHER INFORMATION CONTACT: Keith Mead, Aerospace Engineer, Engine Certification Office, FAA, Engine and Propeller Directorate, 12 New England Executive Park, Burlington, MA 01803–5299; telephone (781) 238–7744 fax (781) 238–7199.

SUPPLEMENTARY INFORMATION: A final rule airworthiness directive applicable to Rolls-Royce plc (RR) RB211–524G and –524H series turbofan engines, was published in the **Federal Register** on February 14, 2002 (67 FR 6859). The following correction is needed:

On page 6859, in the first column, the Amendment No. in the fifth line of the Heading is corrected to read ''Amendment 39–12640.''

PART 39—[CORRECTED]

§ 39.13 [Corrected]

On page 6860, in the third column, in amendatory instruction 2, in the fifth line, and in the heading of the AD, beginning in the first line, correct ''Amendment 39–12460'' to read ''Amendment 39–12640''.

Issued in Burlington, MA, on March 12, 2002.

Francis A. Favara,

Acting Manager, Engine and Propeller Directorate, Aircraft Certification Service.

[FR Doc. 02–6531 Filed 3–19–02; 8:45 am]

BILLING CODE 4910–13–U

DEPARTMENT OF THE TREASURY

Customs Service

19 CFR Part 141

[T.D. 02–12]

RIN 1515–AD07

Payment of Duties on Certain Steel Products

AGENCY: Customs Service, Department of the Treasury.

ACTION: Temporary rule.

SUMMARY: This is a temporary rule that requires importers of the steel products described in the Presidential Proclamation 7529 of March 5, 2002, To Facilitate Positive Adjustment to Competition From Imports of Certain Steel Products published in the **Federal Register** (67 FR 10553) on March 7, 2002, to defer until April 19, 2002, the deposit of the estimated Customs duties described in the Proclamation on those products entered, or withdrawn from warehouse for consumption in the Customs territory of the United States on or after 12:01 a.m., EST, March 20, 2002 and up to April 4, 2002. This temporary rule implements an instruction of the President regarding the Presidential Proclamation.

EFFECTIVE DATE: This temporary rule is effective at 12:01 a.m. EST, March 20, 2002, and expires on April 20, 2002. This temporary rule applies to those steel products described in Presidential Proclamation 7529 of March 5, 2002, To Facilitate Positive Adjustment to Competition From Imports of Certain Steel Products published in the **Federal Register** (67 FR 10535) on March 7, 2002, that are entered or withdrawn from warehouse for consumption in the Customs territory of the United States on or after 12:01 a.m., EST, March 20, 2002 and up to April 4, 2002.

FOR FURTHER INFORMATION CONTACT: Millie Gleason, Office of Field Operations (202) 927–0625.

SUPPLEMENTARY INFORMATION:

Background

On March 5, 2002, President George W. Bush signed Presidential Proclamation 7529, a proclamation to facilitate positive adjustment to competition from imports of certain steel products. The Proclamation, which was issued under the President's authority under section 203 of the Trade Act of 1974, as amended (19 U.S.C. 2253), established increases in duty and a tariff-rate quota on imports of certain steel products. These safeguard measures were taken by the President to facilitate efforts by the domestic industry to make positive adjustment to import competition and provide greater economic and social benefits than costs. In the Proclamation, the President provides that if he determines within 30 days of the Proclamation that consultations between the United States and other World Trade Organization (WTO) members pursuant to Article 12.3 of the WTO Agreement on Safeguards have revealed a compelling reason to reduce, modify, or terminate a safeguard measure, he shall proclaim a corresponding reduction, modification, or termination of the safeguard measure.

In conjunction with the Proclamation, President Bush also sent a memorandum dated March 5, 2002, to the Secretary of the Treasury, the Secretary of Commerce, and the United States Trade Representative requiring action under section 203 of the Trade Act of 1974 (19 U.S.C. 2253). In that memorandum, the President instructed the Secretary of the Treasury, pursuant to section 505(a) of the Tariff Act of 1930 (19 U.S.C. 1505(a)), to prescribe by regulation a date no later than 45 days after the date of the memorandum at which estimated duties for the steel products described in the Proclamation that are entered or withdrawn from warehouse for consumption on or after 12:01 a.m., EST, March 20, 2002, and up to the 30th day after the signing of the memorandum shall be deposited. The purpose of this deferral of duty is to facilitate consultations between the United States and its foreign trading partners concerning the President's determination in accordance with Article 12.3 of the World Trade Organization Agreement on Safeguards.

The Proclamation and the Memorandum for the Secretary of the Treasury, the Secretary of Commerce, and the United States Trade Representative were published in the **Federal Register** (67 FR 10553, 67 FR 10593) on March 7, 2002. The effective date of the Proclamation is March 20, 2002.

This document sets forth the temporary regulation that the President instructed the Secretary of the Treasury to prescribe. It is noted that, pursuant to the regulation set forth below, only deposit of the duties required pursuant to Presidential Proclamation 7529 is deferred. The deferral of deposit of duties is not applicable to regular duties, including antidumping and countervailing duties, that are owed on the entry of products covered by the Proclamation.

Administrative Procedure Act, Regulatory Flexibility Act and Executive Order 12866

This regulation implements a direction of the President of the United States pursuant to his authority under section 203 of the Trade Act of 1974, as amended (19 U.S.C. 2253) to take all appropriate and feasible action within his power which he determines will facilitate efforts by the domestic industry to make a positive adjustment to import competition and provide greater economic and social benefits than costs. Accordingly, there is good cause that notice and public procedure are contrary to the public interest pursuant to 5 U.S.C. 553(b)(B). For the same reason, and because this temporary rule relieves importers from the obligation to deposit estimated duties, a delayed effective date is not required pursuant to 5 U.S.C. 553(d)(1) and (3). Moreover, because this temporary rule facilitates consultations between the United States and its foreign trading partners concerning the President's determination in accordance with Article 12.3 of the World Trade Organization Agreement on Safeguards, this rule involves a foreign affairs function of the United States that is exempt from notice and public procedure, as well as a delayed effective date, pursuant to 5 U.S.C. 553(a)(1).

Because no notice of proposed rulemaking is required, this temporary rule is not subject to the provisions of the Regulatory Flexibility Act (5 U.S.C. 601 *et seq.*) Nor is this temporary rule a ''significant regulatory action'' for purposes of E.O. 12866.

List of Subjects in 19 CFR Part 141

Customs duties and inspection, Entry of merchandise, Release of merchandise, Reporting and recordkeeping requirements.

Amendment to the Regulations

Part 141, Customs Regulations (19 CFR part 141) is amended as set forth below.

PART 141—ENTRY OF MERCHANDISE

1. The general authority citation for part 141 and the specific authority citation for subpart G continue to read, and a new specific authority for § 141.102(f) is added in appropriate numerical order to read as follows:

Authority: 5 U.S.C. 301; 19 U.S.C. 66, 1431, 1433, 1434, 1624; 46 U.S.C. App. 3, 91.

* * * * *

Subpart G also issued under 19 U.S.C. 1505;

* * * * *

Section 141.102(f) also issued under Presidential Proclamation 7529;

* * * * *

2. Section 141.102 is amended by adding a new paragraph (f) to read as follows:

§ 141.102 When deposit of estimated duties, estimated taxes, or both not required.

* * * * *

(f) *Steel products described in Presidential Proclamation 7529 of March 5, 2002, To Facilitate Positive Adjustment to Competition From Imports of Certain Steel Products.* An importer of the steel products described in Presidential Proclamation 7529 of March 5, 2002, To Facilitate Positive Adjustment to Competition From Imports of Certain Steel Products published in the **Federal Register** (67 FR 10553) on March 7, 2002, must defer until April 19, 2002, the deposit of the estimated Customs duties described in the Proclamation on those products entered, or withdrawn from warehouse for consumption in the Customs territory of the United States on or after 12:01 a.m., EST, March 20, 2002, and up to April 4, 2002.

Robert C. Bonner,

Commissioner of Customs.

Approved: March 18, 2002.

Timothy E. Skud,

Acting Deputy Assistant Secretary of the Treasury.

[FR Doc. 02–6807 Filed 3–18–02; 11:05 am]

BILLING CODE 4820–02–P

DEPARTMENT OF TRANSPORTATION

Federal Highway Administration

23 CFR Part 710

[FHWA Docket No. FHWA–2001–8624]

RIN 2125–AE82

Right-of-Way and Real Estate; Program Administration

AGENCY: Federal Highway Administration (FHWA), DOT.

ACTION: Final rule.

SUMMARY: This document amends the right-of-way regulations for federally assisted transportation projects to clarify that financial assistance provided by the FHWA may participate in relocation assistance benefits, provided by State and local agencies pursuant to State law, that are in addition to the relocation benefits prescribed by the Uniform Relocation Assistance and Real Property Acquisition Policies Act of 1970 (Uniform Act), as amended.

DATES: This final rule is effective April 19, 2002.

FOR FURTHER INFORMATION CONTACT: Mr. James E. Ware, Office of Real Estate Services, HEPR, (202) 366–2019, or Mr. Reid Alsop, Office of Chief Counsel, HCC–30, (202) 366–1371, FHWA 400 Seventh Street, SW., Washington, DC 20590. Office hours are from 7:45 a.m. to 4:15 p.m., e.t., Monday through Friday, except Federal holidays.

SUPPLEMENTARY INFORMATION:

Electronic Access

Internet users may access all comments received by the U.S. DOT Dockets, Room PL–401, by using the universal resource locator (URL): *http://dms.dot.gov*. It is available 24 hours each day, 365 days each year. Please follow the instructions online for more information and help.

An electronic copy of this document may be downloaded by using a modem and suitable communications software from the Government Printing Office's Electronic Bulletin Board Service at (202) 512–1661. Internet users may reach the **Federal Register**'s home page at *http://www.nara.gov/fedreg* and the Government Printing Office's database at: *http://www.access.gpo.gov/nara*.

Background

The FHWA provides funds to the States and other organizations to reimburse them for the costs they have incurred in constructing highways and other transportation related projects pursuant to title 23, United States Code. These projects frequently involve the acquisition of real property or the displacement of persons, businesses and farms. The Uniform Relocation Assistance and Real Property Acquisition Policies Act of 1970 (Uniform Act), as amended (42 U.S.C. 4601 *et seq.*) ensures the fair and equitable treatment of persons whose real property is acquired or who are displaced as a result of a Federal or federally-assisted project. The FHWA regulations dealing with reimbursement, and the acquisition and management of real property, are contained in 23 CFR part 710.

On May 9, 2001, we published a notice of proposed rulemaking (NPRM) at 66 FR 23636, to propose amending our right-of-way regulations for federally assisted transportation projects to provide clarification. The NPRM described the development of the current regulation, which revised FHWA's policy on participation in costs incurred by States in the acquisition of real property. Basically, the FHWA now participates in any acquisition costs that are required by State law. In the NPRM, we proposed to revise the regulations to clarify that Federal financial assistance, provided by the FHWA pursuant to title 23, U.S.C., may be applied to relocation assistance benefits provided by State and local agencies, pursuant to State law, that are in addition to the relocation benefits prescribed by the Uniform Act.

The FHWA believes that its participation in such relocation payments is permissible based on the FHWA's general authority to participate in the costs of ''construction,'' which is defined in 23 U.S.C. 101(a)(3) to include both costs of right-of-way acquisition and relocation assistance. We believe that the broad language in 23 CFR 710.203(b)(1) allows for this type of assistance; however, we received several inquiries regarding the FHWA's participation in relocation payments made by some States, pursuant to State law, that are in addition to those required by the Uniform Act. Therefore, in the NPRM we proposed amending section 710.203(b)(2) to clarify this matter.

Discussion of Comments

We received two written comments and one oral comment to the docket. The three commenters were from the Oregon, Washington, and Wisconsin State departments of transportation. The Washington DOT supported the proposed revision noting that the current Uniform Act benefits are inadequate for businesses. The Wisconsin DOT provided several technical comments. It noted that the

change would allow Federal participation in some increased payments provided by State law, but was also concerned that more local governments might avail themselves of Federal funds thereby increasing its oversight responsibilities.

The Oregon DOT provided a verbal comment that questioned whether the proposed clarification would allow the FHWA to participate in relocation payments to aliens not lawfully present in the United States (illegal aliens). While the intent of this clarification is to emphasize that States have the flexibility in using the FHWA funds to participate in relocation payments required by State law, in addition to those payments mandated by the Uniform Act, we do not believe that the FHWA should permit the participation of Federal funds in such relocation payments to persons who Congress has specifically excluded from Uniform Act coverage. The Congress stated specifically in section 4605(a) of the Uniform Act that, with limited exceptions, a person not lawfully present in the United States is not eligible to receive relocation assistance under the Uniform Act (42 U.S.C. 4605(a)).

The Congress clearly stated that displaced persons shall not be eligible to receive relocation payments or any other assistance under the Uniform Act if they are not lawfully present in the United States. Consistent with that prohibition we have provided in this final rule that the FHWA will not participate in relocation assistance and payments provided by States to aliens not lawfully present in the United States.

We have adopted the change proposed with a slight modification, as discussed above, to deny Federal participation in relocation assistance and payments provided to illegal aliens. The primary reason for this change remains the same as stated in the NPRM, to make it clear that FHWA participation policies concerning both State acquisition costs and State relocation costs are the same. That is, the FHWA will participate in those acquisition and relocation costs that are required by State law (except for relocation costs to illegal aliens).

This basic participation policy promotes program streamlining. It gives States flexibility in the use of Federal aid funds available to the States. Further, it eliminates administrative burdens that would result if it were necessary to analyze all acquisition and relocation costs and categorize them as either participating or nonparticipating for purposes of Federal assistance. Finally, if the NRPM were not adopted uncertainty would remain as to whether acquisition costs required by State law and relocation costs required by State law should be treated differently for purposes of Federal participation.

While we are aware of the Wisconsin DOT's concern regarding possible increased oversight, we note that one of the primary purposes of this change is to increase the ability of States to effectively manage their acquisition and relocation programs. In the absence of any further comments, we believe that the promulgation of this final rule is necessary to advance the important program streamlining objectives noted above.

Rulemaking Analyses and Notice

Executive Order 12866 (Regulatory Planning and Review) and DOT Regulatory Policies and Procedures

The FHWA has determined that this action is not a significant regulatory action within the meaning of Executive Order 12866, nor is it a significant regulatory policy and procedure. It is anticipated that the economic impact of this rulemaking will be minimal; therefore, a full regulatory evaluation is not required. The FHWA does not consider this action to be a significant regulatory action because this rule clarifies existing requirements relating to FHWA reimbursement for certain expenditures that are required by State law. Neither the individual or cumulative impact of this action is significant because this action would not alter the funding levels available to the states for Federal or federally assisted programs covered by title 23, U.S. Code.

Regulatory Flexibility Act

In compliance with the Regulatory Flexibility Act (Pub. L. 96–354, 5 U.S.C. 601–612), the agency has evaluated the effects of this rule on small entities and hereby certifies that this action will not have a significant economic impact on a substantial number of small entities. This action would merely clarify existing procedures.

Environmental Impact

The FHWA has also analyzed this action for the purpose of the National Environmental Policy Act (42 U.S.C. 4321 *et seq.*), and has determined that this action would not have any effect on the quality of the human environment.

Executive Order 13132 (Federalism)

The FHWA has analyzed this action in accordance with the principles and criteria contained in Executive Order 13132, and determined that this action does not have sufficient federalism implications to warrant the preparation of a federalism assessment. This rule clarifies that greater flexibility is placed at the State or local level in the use of Federal funds in recognition of State laws. Nothing in this document directly preempts any State law or regulation.

Executive Order 12372 (Intergovernmental Review)

Catalog of Federal Domestic Assistance Program Number 20.205, Highway Planning and Construction. The regulations implementing Executive Order 12372 regarding intergovernmental consultation on Federal programs and activities apply to this program.

Unfunded Mandates Reform Act

Under Section 202 of the Unfunded Mandates Reform Act of 1995 (Pub. L. 104–4, 109 Stat. 48), the FHWA must prepare a budgetary impact statement on any proposal or final rule that includes a Federal mandate that may result in estimated annual costs to State, local or tribal government of $100 million or more. The FHWA has determined that this rule will not result in estimated costs of $100 million or more to State, local, or tribal governments. This action simply clarifies existing requirements. Accordingly no additional costs to State, local or tribal governments are anticipated as a result of this action.

Executive Order 12988 (Civil Justice Reform)

This action meets applicable standards in sections 3(a) and 3(b)(2) of Executive Order 12988, Civil Justice Reform, to minimize litigation, eliminate ambiguity, and reduce burden.

Executive Order 13045 (Protection of Children)

The FHWA has analyzed this action under Executive Order 13045, Protection of Children from Environmental Health Risks and Safety Risks. This rule is not an economically significant rule and does not concern an environmental risk to health or safety that may disproportionately affect children.

Executive Order 12630 (Taking of Private Property)

This rule will not affect a taking of private or otherwise have taking implications under Executive Order 12630, Governmental Actions and Interference with Constitutionally Protected Property Rights.

Paperwork Reduction Act

This proposal contains no new collection of information requirements for purposes of the Paperwork Reduction Act of 1995, 44 U.S.C. 3501–3520.

Regulation Identification Number

A regulation identification number (RIN) is assigned to each regulatory action listed in the Unified Agenda of Federal Regulations. The Regulatory Information Service Center publishes the Unified Agenda in April and October of each year. The RIN contained in the heading of this document can be used to cross-reference this action with the Unified Agenda.

List of Subjects in 23 CFR Part 710

Grant programs-transportation, Highways and roads, Real property acquisition, Rights-of-way.

Issued on: March 13, 2002.

Mary E. Peters,

Federal Highway Administrator.

In consideration of the foregoing, the FHWA amends title 23, Code of Federal Regulations, Chapter 1, by revising Part 710 as set forth below:

PART 710—[AMENDED]

1. The authority citation for part 710 continues to read as follows:

Authority: 23 U.S.C. 101(a), 107, 108, 111, 114, 133, 142(f), 145, 156, 204, 210, 308, 315, 317, and 323; 42 U.S.C. 2000d *et seq.*, 4633, 4651–4655; 49 CFR 1.48(b) and (cc), 18.31, and parts 21 and 24; 23 CFR 1.32.

2. Revise § 710.203(b)(2) to read as follows:

§ 710.203 Funding and reimbursement.

* * * * *

(b) * * *

(2) *Relocation assistance and payments.* Usual costs and disbursements associated with the following:

(i) Relocation assistance and payments required under 49 CFR part 24, and

(ii) Relocation assistance and payments provided under the laws of the State that may exceed the requirements of 49 CFR part 24, except for relocation assistance and payments provided to aliens not lawfully present in the United States.

* * * * *

§ 710.409 [Amended]

3. Amend § 710.409(a) by revising the reference ''§ 710.403(c)'' to read ''§ 710.403(d)''.

[FR Doc. 02–6760 Filed 3–19–02; 8:45 am]

BILLING CODE 4910–22–P

DEPARTMENT OF THE TREASURY

Internal Revenue Service

26 CFR Parts 1 and 602

[TD 8985]

RIN 1545–AY02

Hedging Transactions

AGENCY: Internal Revenue Service (IRS), Treasury.

ACTION: Final regulations.

SUMMARY: This document contains final regulations relating to the character of gain or loss from hedging transactions. The regulations reflect changes to the law made by the Ticket to Work and Work Incentives Improvement Act of 1999. The regulations affect businesses entering into hedging transactions.

DATES: *Effective Date:* These regulations are effective March 20, 2002.

Applicability Dates: For dates of applicability of these regulations, see the discussion in the Dates of Applicability paragraph in the Supplementary Information portion of the preamble.

FOR FURTHER INFORMATION CONTACT: Elizabeth Handler, (202) 622–3930 or Viva Hammer at (202) 622–0869 (not toll-free numbers).

SUPPLEMENTARY INFORMATION:

Paperwork Reduction Act

The collections of information contained in these final regulations have been reviewed and approved by the Office of Management and Budget in accordance with the Paperwork Reduction Act of 1995 (44 U.S.C. 3507(d)) under control number 1545–1480. Some responses to these collections of information are mandatory, and others are required to obtain the benefit of the separate-entity election.

An agency may not conduct or sponsor, and a person is not required to respond to, a collection of information unless it displays a valid control number assigned by the Office of Management and Budget.

The estimated annual burden per respondent or recordkeeper varies from .1 to 40 hours, depending on individual circumstances, with an estimated average of 5.9 hours.

Comments concerning the accuracy of this burden estimate and suggestions for reducing this burden should be sent to the Internal Revenue Service, Attn: IRS Reports Clearance Officer, W:CAR:MP:FP:S, Washington, DC 20224, and to the Office of Management and Budget, Attn: Desk Officer for the Department of the Treasury, Office of Information and Regulatory Affairs, Washington, DC 20503.

Books or records relating to a collection of information must be retained as long as their contents may become material in the administration of any Internal Revenue law. Generally, tax returns and tax return information are confidential, as required by 26 U.S.C. 6103.

Background

This document contains amendments to 26 CFR Part 1 under section 1221 of the Internal Revenue Code (Code). Prior to amendment in 1999, section 1221 generally defined a capital asset as property held by the taxpayer other than: (1) Stock in trade or other types of assets includible in inventory; (2) property used in a trade or business that is real property or property subject to depreciation; (3) certain copyrights (or similar property); (4) accounts or notes receivable acquired in the ordinary course of a trade or business; and (5) U.S. government publications.

In 1994, the IRS published in the **Federal Register** (59 FR 36360) final Treasury regulations under section 1221 providing for ordinary character treatment for certain business hedges. The regulations generally apply to transactions that reduce risk with respect to ordinary property, ordinary obligations, and borrowings of the taxpayer and that meet certain identification requirements. (§ 1.1221–2). In 1996, the IRS published in the **Federal Register** (61 FR 517) final regulations on the character and timing of gain or loss from hedging transactions entered into by members of a consolidated group. In this preamble, the final regulations published in 1994 and 1996 are referred to collectively as the Treasury regulations.

On December 17, 1999, section 1221 was amended by section 532 of the Ticket to Work and Work Incentives Improvement Act of 1999 (113 Stat 1860) to provide ordinary gain or loss treatment for hedging transactions and consumable supplies. Section 1221(a)(7) provides ordinary treatment for hedging transactions that are clearly identified as such before the close of the day on which they were acquired, originated, or entered into.

The statute defines a hedging transaction as a transaction entered into by the taxpayer in the normal course of business primarily to manage risk of interest rate, price changes, or currency fluctuations with respect to ordinary property, ordinary obligations, or borrowings of the taxpayer. Sections 1221(b)(2)(A)(i) and (ii). The statutory

definition of hedging transaction also includes transactions to manage such other risks as the Secretary may prescribe in regulations. Section 1221(b)(2)(A)(iii). Further, the statute grants the Secretary the authority to provide regulations to address the treatment of nonidentified or improperly identified hedging transactions, and hedging transactions involving related parties (sections 1221(b)(2)(B) and (b)(3), respectively). The statutory hedging provisions are effective for transactions entered into on or after December 17, 1999. Congress intended that the hedging rules be the exclusive means through which the gains and losses from hedging transactions are treated as ordinary. S. Rep. No. 201, 106th Cong., 1st Sess. 25 (1999).

Section 1221(a)(8) provides that supplies of a type regularly consumed by the taxpayer in the ordinary course of a taxpayer's trade or business are not capital assets. That provision is effective for supplies held or acquired on or after December 17, 1999.

A notice of proposed rulemaking (REG–107047–00, 2001–14 I.R.B. 1002) was published in the **Federal Register** (66 FR 4738) on January 18, 2001. On May 16, 2001, the IRS held a public hearing on the proposed regulations. Written comments responding to the notice of proposed rulemaking were also received. In response to these comments, the proposed regulations were modified and as so modified are adopted as final regulations. The principal changes to the proposed regulations are discussed below.

Explanation of Provisions

Coordination With International Provisions of the Code

The provisions of these regulations generally apply to determine the character of gain or loss from transactions that are also subject to various international provisions of the Code. Paragraph (a)(4) of the regulations, however, provides that the character of gain or loss on section 988 transactions is not determined under these regulations because gain or loss on those transactions is ordinary under section 988(a)(1). In addition, no implication is intended as to what constitutes ''risk management'' or ''managing risk'' for purposes of proposed or final regulations under section 482.

Paragraph (a)(4) of the proposed regulations provided that the definition of a hedging transaction under § 1.1221–2(b) of the proposed regulations would apply for purposes of certain other international provisions of the Code only to the extent provided in regulations issued under those provisions. Technical changes have been made in the final regulations to eliminate references to proposed regulations as well as Code sections for which the relevant regulations have not been issued in final form. Subsequent regulations will specify the extent to which the rules relating to hedging transactions that are contained in § 1.1221–2 will be applicable for purposes of those other regulations and related Code sections.

Risk Management Standard

Several commentators noted that the proposed regulations used risk reduction as the operating standard to implement the risk management definition of hedging introduced by section 1221(b)(2)(A). These commentators found that risk reduction is too narrow a standard to encompass the intent of Congress which defined hedges to include transactions that manage risk of interest rate, price changes or currency fluctuations. They urged the IRS and Treasury to adopt a broader definition of hedging to reflect Congress' intent. With one exception, the commentators did not suggest a definition of risk management.

In response to these comments, the final regulations have been restructured to implement the risk management standard. No definition of risk management is provided, but instead, the rules characterize a variety of classes of transactions as hedging transactions because they manage risk. Risk reducing transactions still qualify as one class of hedging transactions, but there are also others. In addition, specific provision is made for the recognition of additional types of qualifying risk management transactions through published guidance or private letter rulings. Under the final regulations, as under the proposed regulations, transactions entered into for speculative purposes will not qualify as hedging transactions. See S. Rep. No. 201, 106th Cong., 1st Sess. 24 (1999).

Application on the Basis of Separate Business Units

The proposed regulations provided that a taxpayer has risk of a particular type only if it is at risk when all of its operations are considered. That is, risk must exist on a ''macro'' basis. For this purpose, under the proposed regulations, a taxpayer has to show that hedges of particular assets or liabilities, or groups of assets or liabilities, are reasonably expected to reduce the overall risk of the taxpayer's operations.

Commentators pointed out that this entity-based approach to hedging is no longer uniform business practice. Instead, businesses often conduct risk management on a business unit by business unit basis. In response to these comments, the final regulations permit the determination of whether a transaction manages risk to be made on a business unit basis provided that the business unit is within a single entity or consolidated return group that adopts the single-entity approach. An example was added to the final regulations in which for one taxpayer, the determination of whether hedging activities reduce risk is made at the business unit level. In the example, the conduct of risk management activities within separate business units is undertaken as part of a program to reduce the overall risk of the taxpayer's operations.

Fixed-to-Floating Interest Rate Hedges

Paragraph (c)(1) of the proposed regulations recognized that a transaction that economically converts an interest rate or price from a fixed rate or price to a floating rate or price may manage risk. Commentators suggested that the rule in the proposed regulations provides insufficient guidance in that it states only that fixed-to-floating interest rate or price hedges may be hedging transactions. In response to these comments, the regulations have been restructured to separately address interest rate hedges and price hedges.

Commentators suggested that in the case of interest rate conversions, a taxpayer may choose to convert from a floating to a fixed rate to fix the amount payable on the obligation. However, a taxpayer could also elect to convert from a fixed to a floating rate to insure that the value of the liability remained relatively constant. In response to these comments, the final regulations provide that a transaction that converts an interest rate from a fixed rate to a floating rate or from a floating rate to a fixed rate manages risk. With respect to fixed-to-floating price hedges, the final regulations adopt the proposed rules without change.

Transactions Not Entered Into Primarily To Manage Risk

Paragraph (c)(3) of the proposed regulations provided that the purchase or sale of certain assets will not qualify as a hedging transaction if the assets are not acquired primarily to manage risk. This rule was illustrated by the example of a taxpayer that has an interest rate risk from a floating rate borrowing and that acquires debt instruments bearing a comparable floating interest rate.

Although the taxpayer's interest rate risk from the floating rate borrowing may be reduced by the purchase of the floating rate debt instruments, the proposed regulations provided that the acquisition of the debt instruments is not made primarily to reduce risk and, therefore, is not a hedging transaction.

The IRS and Treasury understand that some employers may invest in assets (such as shares of a mutual fund) that are used as a reference investment for purposes of computing their liability to employees under a nonqualified deferred compensation plan. A question may arise whether such an investment may constitute a hedging transaction and, if so, whether income from the investment may be deferred by the employer until payments of deferred compensation are made to employees. See § 1.446–4(b); but compare *Albertson's, Inc.* v. *Commissioner*, 42 F.3d 537 (9th Cir. 1994).

The rule in the proposed regulations is based on § 1.1221–2(c)(1)(vii). The rule has been restated in the final regulations to refer specifically to investments in debt instruments, equity securities, and annuity contracts so as to provide greater certainty in its application. For this purpose certain transactions in instruments that are not themselves debt instruments may include a debt investment. See, *e.g.*, § 1.446–3(g)(4). Further, the final regulations provide that the IRS may identify by future published guidance specified transactions that are determined not to be entered into primarily to manage risk. An example has been added to the final regulations to illustrate that an investment in mutual fund shares in the case described in the preceding paragraph does not qualify as a hedging transaction. A similar example is added with respect to an investment in an annuity contract.

Hedging Risks Other Than Interest Rate or Price Changes, or Currency Fluctuations

Paragraph (c)(8) of the proposed regulations provided that the Commissioner may, by published guidance, provide that hedging transactions include transactions entered into to manage risks other than interest rate or price changes, or currency fluctuations.

The notice of proposed rulemaking solicited comments regarding the expansion of the definition of hedging transactions to include transactions that manage risks other than interest rate or price changes, or currency fluctuations with respect to ordinary property, ordinary obligations or borrowings of the taxpayer. Some comments were received in response to that request. Because the comments described hedging transactions that related to the general operating results of a business (such as gross sales) rather than specific ordinary property, ordinary obligations or borrowings of the taxpayer, the implementation of rules respecting such hedges would present a number of issues not easily dealt with by the rules contained in the final regulations. Thus, the expansion of the scope of operation of the hedging rules is not being proposed at this time, so as not to delay the publication of guidance on the matters that are covered by the final regulations. However, the IRS is continuing to consider whether to expand the definition of hedging transactions to cover hedges of such other risks. The IRS and Treasury invite comments on the types of risks that should be covered, including specific examples of derivative transactions that may be incorporated into future guidance, as well as the appropriate timing of inclusion of gains and losses with respect to such transactions. Send submissions to: CC:ITA:RU (REG–107047–00), room 5226, Internal Revenue Service, POB 7604, Ben Franklin Station, Washington, DC 20044.

"Gap" Hedges

The status of so-called gap hedges was not separately addressed in the proposed regulations and is not covered in the final regulations. Insurance companies, for example, sometimes hedge the gap between their liabilities and the assets that fund them. Under the final regulations, a hedge of those assets would not qualify as a hedging transaction if the assets are capital assets. Whether a gap hedge qualifies as a liability hedge is a question of fact and depends on whether it is more closely associated with the liabilities than with the assets.

Identification Requirement

A rule has been added specifying additional information that must be provided for a transaction that counteracts a hedging transaction.

Dates of Applicability

The regulations generally apply to all transactions entered into on or after March 20, 2002. However, the IRS will not challenge any transaction entered into on or after December 17, 1999, and before March 20, 2002, that satisfies the provisions of either § 1.1221–2 of REG–107047–00, published in the **Federal Register** (66 FR 4738) on January 18, 2001, or the provisions of this final regulation.

Special Analyses

It has been determined that this Treasury decision is not a significant regulatory action as defined in Executive Order 12866. Therefore, a regulatory assessment is not required. It is hereby certified that the collection of information in these regulations will not have a significant economic impact on a substantial number of small entities. This certification is based upon the fact that very few small businesses enter into hedging transactions due to their cost and complexity. Further, those small businesses that hedge enter into very few hedging transactions because hedging transactions are costly, complex, and require constant monitoring and a sophisticated understanding of the capital markets. Therefore, a Regulatory Flexibility Analysis under the Regulatory Flexibility Act (5 U.S.C. chapter 6) is not required. Pursuant to section 7805(f) of the Code, the notice of proposed rulemaking preceding these regulations was submitted to the Chief Counsel for Advocacy of the Small Business Administration for comment on its impact on small business.

Drafting Information

The principal author of these regulations is Elizabeth Handler, Office of the Associate Chief Counsel (Financial Institutions and Products). However, other personnel from the IRS and Treasury Department participated in their development.

List of Subjects

26 CFR Part 1

Income taxes, Reporting and recordkeeping requirements.

26 CFR Part 602

Reporting and recordkeeping requirements.

Adoption of Amendments to the Regulations

Accordingly, 26 CFR parts 1 and 602 are amended as follows:

PART 1—INCOME TAXES

Paragraph 1. The authority citation for part 1 is amended by revising the entry for § 1.1221–2 to read as follows:

Authority: 26 U.S.C. 7805 * * *

Section 1.1221–2 also issued under 26 U.S.C. 1221(b)(2)(A)(iii), (b)(2)(B), and (b)(3); 1502 and 6001. * * *

Par. 2. In the list below, for each location indicated in the left column,

remove the language in the middle column from that section, and add the language in the right column.

Affected section	Remove	Add
1.446–4(d)(2), first sentence	1.1221–2(e)	1.1221–2(f).
1.446–4(d)(2), last sentence	1.1221–2(e)(2)	1.1221–2(f)(2).
1.446–4(d)(3), first sentence	1.1221–2(e)	1.1221–2(f).
1.446–4(d)(3), first sentence	1.1221–2(a)(4)(i)	1.1221–2(a)(4).
1.446–4(e)(7), first sentence	1.1221–2(c)(2)	1.1221–2(d)(4).
1.446–4(e)(9)(ii), first sentence	1.1221–2(d)(2)	1.1221–2(e)(2).
1.446–4(e)(9)(ii), last sentence	1.1221–2(d)(2)(ii)	1.1221–2(e)(2)(ii).
1.475(b)–1(d)(2)	1.1221–2(e)	1.1221–2(f).
1.954–2(a)(4)(ii)(A), first sentence	1.1221–2(a) through (c).	1.1221–2(a) through (d).
1.954–2(a)(4)(ii)(B), first sentence	1.1221–2(e)	1.1221–2(f).
1.954–2(g)(2)(ii)(B)(*2*), last sentence	1.1221–2(c)(7)	1.1221–2(c)(3).
1.954–2(g)(3)(i)(B), last sentence	1.1221–2(c)(7)	1.1221–2(c)(3).
1.1256(e)–1(b), first and last sentences	1.1221–2(e)(1)	1.1221–2(f)(1).
1.1256(e)–1(c), first sentence	1.1221–2(e)(1)	1.1221–2(f)(1).
1.1256(e)–1(c), last sentence	paragraph (f)(1)(ii) of § 1.1221–2.	1.1221–2(g)(1)(ii).

Par. 3. Section 1.1221–2 is revised to read as follows:

§ 1.1221–2 Hedging transactions.

(a) *Treatment of hedging transactions*—(1) *In general.* This section governs the treatment of hedging transactions under section 1221(a)(7). Except as provided in paragraph (g)(2) of this section, the term capital asset does not include property that is part of a hedging transaction (as defined in paragraph (b) of this section).

(2) *Short sales and options.* This section also governs the character of gain or loss from a short sale or option that is part of a hedging transaction. Except as provided in paragraph (g)(2) of this section, gain or loss on a short sale or option that is part of a hedging transaction (as defined in paragraph (b) of this section) is ordinary income or loss.

(3) *Exclusivity.* If a transaction is not a hedging transaction as defined in paragraph (b) of this section, gain or loss from the transaction is not made ordinary on the grounds that property involved in the transaction is a surrogate for a noncapital asset, that the transaction serves as insurance against a business risk, that the transaction serves a hedging function, or that the transaction serves a similar function or purpose.

(4) *Coordination with section 988.* This section does not apply to determine the character of gain or loss realized on a section 988 transaction as defined in section 988(c)(1) or realized with respect to any qualified fund as defined in section 988(c)(1)(E)(iii).

(b) *Hedging transaction defined.* Section 1221(b)(2)(A) provides that a hedging transaction is any transaction that a taxpayer enters into in the normal course of the taxpayer's trade or business primarily—

(1) To manage risk of price changes or currency fluctuations with respect to ordinary property (as defined in paragraph (c)(2) of this section) that is held or to be held by the taxpayer;

(2) To manage risk of interest rate or price changes or currency fluctuations with respect to borrowings made or to be made, or ordinary obligations incurred or to be incurred, by the taxpayer; or

(3) To manage such other risks as the Secretary may prescribe in regulations (see paragraph (d)(6) of this section).

(c) *General rules*—(1) *Normal course.* Solely for purposes of paragraph (b) of this section, if a transaction is entered into in furtherance of a taxpayer's trade or business, the transaction is entered into in the normal course of the taxpayer's trade or business. This rule includes managing risks relating to the expansion of an existing business or the acquisition of a new trade or business.

(2) *Ordinary property and obligations.* Property is ordinary property to a taxpayer only if a sale or exchange of the property by the taxpayer could not produce capital gain or loss under any circumstances. Thus, for example, property used in a trade or business within the meaning of section 1231(b) (determined without regard to the holding period specified in that section) is not ordinary property. An obligation is an ordinary obligation if performance or termination of the obligation by the taxpayer could not produce capital gain or loss. For purposes of this paragraph (c)(2), the term termination has the same meaning as it does in section 1234A.

(3) *Hedging an aggregate risk.* The term hedging transaction includes a transaction that manages an aggregate risk of interest rate changes, price changes, and/or currency fluctuations only if all of the risk, or all but a de minimis amount of the risk, is with respect to ordinary property, ordinary obligations, or borrowings.

(4) *Managing risk*—(i) *In general.* Whether a transaction manages a taxpayer's risk is determined based on all of the facts and circumstances surrounding the taxpayer's business and the transaction. Whether a transaction manages a taxpayer's risk may be determined on a business unit by business unit basis (for example by treating particular groups of activities, including the assets and liabilities attributable to those activities, as separate business units), provided that the business unit is within a single entity or consolidated return group that adopts the single-entity approach. A taxpayer's hedging strategies and policies as reflected in the taxpayer's minutes or other records are evidence of whether particular transactions were entered into primarily to manage the taxpayer's risk.

(ii) *Limitation of risk management transactions to those specifically described.* Except as otherwise determined by published guidance or by private letter ruling, a transaction that is not treated as a hedging transaction under paragraph (d) does not manage risk. Moreover, a transaction undertaken for speculative purposes will not be treated as a hedging transaction.

(d) *Transactions that manage risk*—(1) *Risk reduction transactions*—(i) *In general.* A transaction that is entered into to reduce a taxpayer's risk, manages a taxpayer's risk.

(ii) *Micro and macro hedges*—(A) *In general.* A taxpayer generally has risk of a particular type only if it is at risk

when all of its operations are considered. Nonetheless, a hedge of a particular asset or liability generally will be respected as reducing risk if it reduces the risk attributable to the asset or liability and if it is reasonably expected to reduce the overall risk of the taxpayer's operations. If a taxpayer hedges particular assets or liabilities, or groups of assets or liabilities, and the hedges are undertaken as part of a program that, as a whole, is reasonably expected to reduce the overall risk of the taxpayer's operations, the taxpayer generally does not have to demonstrate that each hedge that was entered into pursuant to the program reduces its overall risk.

(B) *Example.* The following example illustrates the rules stated in paragraph (d)(1)(ii)(A) of this section:

Example. Corporation X manages its business operations by treating particular groups of activities, including the assets and liabilities attributable to those assets, as separate business units. A separate set of books and records is maintained with respect to the activities, assets and liabilities of separate business unit *y*. As part of a risk management program that Corporation X reasonably expects to reduce the overall risks of its business operations, Corporation X enters into hedges to reduce the risks of separate business unit *y*. Corporation X may demonstrate that the hedges reduce risk by taking into account only the activities, assets and liabilities of business unit *y*.

(iii) *Written options.* A written option may reduce risk. For example, in appropriate circumstances, a written call option with respect to assets held by a taxpayer or a written put option with respect to assets to be acquired by a taxpayer may be a hedging transaction. See also paragraph (d)(3) of this section.

(iv) *Fixed-to-floating price hedges.* Under the principles of paragraph (d)(1)(ii)(A) of this section, a transaction that economically converts a price from a fixed price to a floating price may reduce risk. For example, a taxpayer with a fixed cost for its inventory may be at risk if the price at which the inventory can be sold varies with a particular factor. Thus, for such a taxpayer a transaction that converts its fixed price to a floating price may be a hedging transaction.

(2) *Interest rate conversions.* A transaction that economically converts an interest rate from a fixed rate to a floating rate or that converts an interest rate from a floating rate to a fixed rate manages risk.

(3) *Transactions that counteract hedging transactions.* If a transaction is entered into primarily to offset all or any part of the risk management effected by one or more hedging transactions, the transaction is a hedging transaction. For example, if a written option is used to reduce or eliminate the risk reduction obtained from another position such as a purchased option, then it may be a hedging transaction.

(4) *Recycling.* A taxpayer may enter into a hedging transaction by using a position that was a hedge of one asset or liability as a hedge of another asset or liability (recycling).

(5) *Transactions not entered into primarily to manage risk*—(i) *Rule.* Except as otherwise determined in published guidance or private letter ruling, the purchase or sale of a debt instrument, an equity security, or an annuity contract is not a hedging transaction even if the transaction limits or reduces the taxpayer's risk with respect to ordinary property, borrowings, or ordinary obligations. In addition, the Commissioner may determine in published guidance that other transactions are not hedging transactions.

(ii) *Examples.* The following examples illustrate the rule stated in paragraph (d)(5)(i) of this section:

Example 1. Taxpayer borrows money and agrees to pay a floating rate of interest. Taxpayer purchases debt instruments that bear a comparable floating rate. Although taxpayer's interest rate risk from the floating rate borrowing may be reduced by the purchase of the debt instruments, the acquisition of the debt instruments is not a hedging transaction, because the transaction is not entered into primarily to manage the taxpayer's risk.

Example 2. Taxpayer undertakes obligations to pay compensation in the future. The amount of the future compensation payments is adjusted as if amounts were invested in a specified mutual fund and were increased or decreased by the earnings, gains and losses that would result from such an investment. Taxpayer invests funds in the shares of the mutual fund. Although the investment in shares of the mutual fund reduces the taxpayer's risk of fluctuation in the amount of its obligation to employees, the investment was not made primarily to manage the taxpayer's risk. Accordingly, the transaction is not a hedging transaction.

Example 3. Taxpayer provides a nonqualified retirement plan for employees that is structured like a defined contribution plan. Based on a schedule that takes into account an employee's monthly salary and years of service with the taxpayer, the taxpayer makes monthly credits to an account for each employee. Each employee may designate that the account will be treated as if it were used to pay premiums on a variable annuity contract issued by the M insurance company with a value that reflects a specified investment option. M offers a number of investment options for its variable annuity contracts. Taxpayer invests funds in M company variable annuity contracts that parallel the investment options selected by the employees. The investment is not made primarily to manage the taxpayer's risk and is not a hedging transaction.

(6) *Hedges of other risks.* The Commissioner may, by published guidance, determine that hedging transactions include transactions entered into to manage risks other than interest rate or price changes, or currency fluctuations.

(7) *Miscellaneous provision*—(i) *Extent of risk management.* A taxpayer may hedge all or any portion of its risk for all or any part of the period during which it is exposed to the risk.

(ii) *Number of transactions.* The fact that a taxpayer frequently enters into and terminates positions (even if done on a daily or more frequent basis) is not relevant to whether these transactions are hedging transactions. Thus, for example, a taxpayer hedging the risk associated with an asset or liability may frequently establish and terminate positions that hedge that risk, depending on the extent the taxpayer wishes to be hedged. Similarly, if a taxpayer maintains its level of risk exposure by entering into and terminating a large number of transactions in a single day, its transactions may nonetheless qualify as hedging transactions.

(e) *Hedging by members of a consolidated group*—(1) *General rule: single-entity approach.* For purposes of this section, the risk of one member of a consolidated group is treated as the risk of the other members as if all of the members of the group were divisions of a single corporation. For example, if any member of a consolidated group hedges the risk of another member of the group by entering into a transaction with a third party, that transaction may potentially qualify as a hedging transaction. Conversely, intercompany transactions are not hedging transactions because, when considered as transactions between divisions of a single corporation, they do not manage the risk of that single corporation.

(2) *Separate-entity election.* In lieu of the single-entity approach specified in paragraph (e)(1) of this section, a consolidated group may elect separate-entity treatment of its hedging transactions. If a group makes this separate-entity election, the following rules apply:

(i) *Risk of one member not risk of other members.* Notwithstanding paragraph (e)(1) of this section, the risk of one member is not treated as the risk of other members.

(ii) *Intercompany transactions.* An intercompany transaction is a hedging transaction (an intercompany hedging transaction) with respect to a member of

a consolidated group if and only if it meets the following requirements—

(A) The position of the member in the intercompany transaction would qualify as a hedging transaction with respect to the member (taking into account paragraph (e)(2)(i) of this section) if the member had entered into the transaction with an unrelated party; and

(B) The position of the other member (the marking member) in the transaction is marked to market under the marking member's method of accounting.

(iii) *Treatment of intercompany hedging transactions.* An intercompany hedging transaction (that is, a transaction that meets the requirements of paragraphs (e)(2)(ii)(A) and (B) of this section) is subject to the following rules—

(A) The character and timing rules of § 1.1502–13 do not apply to the income, deduction, gain, or loss from the intercompany hedging transaction; and

(B) Except as provided in paragraph (g)(3) of this section, the character of the marking member's gain or loss from the transaction is ordinary.

(iv) *Making and revoking the election.* Unless the Commissioner otherwise prescribes, the election described in this paragraph (e)(2) must be made in a separate statement saying ''[Insert Name and Employer Identification Number of Common Parent] HEREBY ELECTS THE APPLICATION OF SECTION 1.1221–2(e)(2) (THE SEPARATE-ENTITY APPROACH).'' The statement must also indicate the date as of which the election is to be effective. The election must be signed by the common parent and filed with the group's Federal income tax return for the taxable year that includes the first date for which the election is to apply. The election applies to all transactions entered into on or after the date so indicated. The election may be revoked only with the consent of the Commissioner.

(3) *Definitions.* For definitions of consolidated group, divisions of a single corporation, group, intercompany transactions, and member, see section 1502 and the regulations thereunder.

(4) *Examples. General Facts.* In these examples, *O* and *H* are members of the same consolidated group. *O*'s business operations give rise to interest rate risk ''*A*,'' which *O* wishes to hedge. *O* enters into an intercompany transaction with *H* that transfers the risk to *H*. *O*'s position in the intercompany transaction is ''*B*,'' and *H*'s position in the transaction is ''*C*.'' *H* enters into position ''*D*'' with a third party to reduce the interest rate risk it has with respect to its position *C*. *D* would be a hedging transaction with respect to risk *A* if *O*'s risk *A* were *H*'s risk. The following examples illustrate this paragraph (e):

Example 1. Single-entity treatment—(i) General rule. Under paragraph (e)(1) of this section, *O*'s risk *A* is treated as *H*'s risk, and therefore *D* is a hedging transaction with respect to risk *A*. Thus, the character of *D* is determined under the rules of this section, and the income, deduction, gain, or loss from *D* must be accounted for under a method of accounting that satisfies § 1.446–4. The intercompany transaction *B–C* is not a hedging transaction and is taken into account under § 1.1502–13.

(ii) *Identification. D* must be identified as a hedging transaction under paragraph (f)(1) of this section, and *A* must be identified as the hedged item under paragraph (f)(2) of this section. Under paragraph (f)(5) of this section, the identification of *A* as the hedged item can be accomplished by identifying the positions in the intercompany transaction as hedges or hedged items, as appropriate. Thus, substantially contemporaneous with entering into *D*, *H* may identify *C* as the hedged item and *O* may identify *B* as a hedge and *A* as the hedged item.

Example 2. Separate-entity election; counterparty that does not mark to market. In addition to the *General Facts* stated above, assume that the group makes a separate-entity election under paragraph (e)(2) of this section. If *H* does not mark *C* to market under its method of accounting, then *B* is not a hedging transaction, and the *B–C* intercompany transaction is taken into account under the rules of section 1502. *D* is not a hedging transaction with respect to *A*, but *D* may be a hedging transaction with respect to *C* if *C* is ordinary property or an ordinary obligation and if the other requirements of paragraph (b) of this section are met. If *D* is not part of a hedging transaction, then *D* may be part of a straddle for purposes of section 1092.

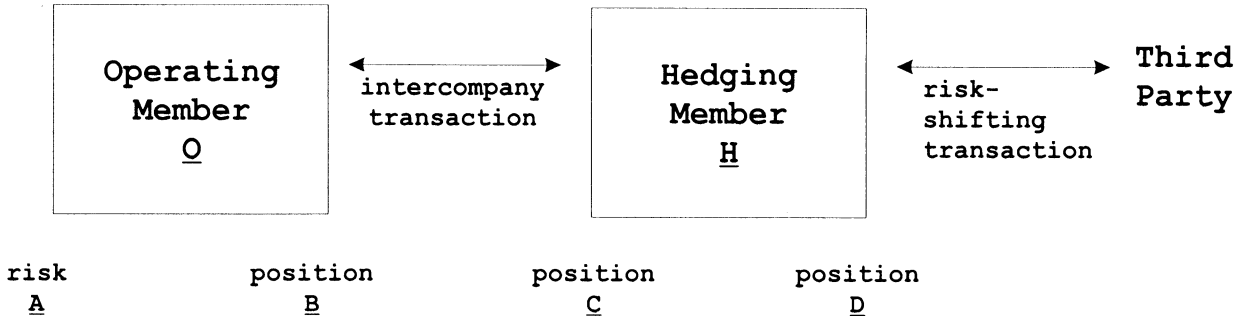

Example 3. Separate-entity election; counterparty that marks to market. The facts are the same as in *Example 2* above, except that *H* marks *C* to market under its method of accounting. Also assume that *B* would be a hedging transaction with respect to risk *A* if *O* had entered into that transaction with an unrelated party. Thus, for *O*, the *B–C* transaction is an intercompany hedging transaction with respect to *O*'s risk *A*, the character and timing rules of § 1.1502–13 do not apply to the *B–C* transaction, and *H*'s income, deduction, gain, or loss from *C* is ordinary. However, other attributes of the items from the *B–C* transaction are determined under § 1.1502–13. *D* is a hedging transaction with respect to *C* if it meets the requirements of paragraph (b) of this section.

(f) *Identification and recordkeeping*—(1) *Same-day identification of hedging transactions.* Under section 1221(a)(7), a taxpayer that enters into a hedging transaction (including recycling an existing hedging transaction) must clearly identify it as a hedging transaction before the close of the day on which the taxpayer acquired, originated, or entered into the transaction (or recycled the existing hedging transaction).

(2) *Substantially contemporaneous identification of hedged item*—(i) *Content of the identification.* A taxpayer that enters into a hedging transaction must identify the item, items, or aggregate risk being hedged. Identification of an item being hedged generally involves identifying a transaction that creates risk, and the type of risk that the transaction creates. For example, if a taxpayer is hedging the price risk with respect to its June purchases of corn inventory, the transaction being hedged is the June purchase of corn and the risk is price movements in the market where the taxpayer buys its corn. For additional rules concerning the content of this identification, see paragraph (f)(3) of this section.

(ii) *Timing of the identification.* The identification required by this paragraph

(f)(2) must be made substantially contemporaneously with entering into the hedging transaction. An identification is not substantially contemporaneous if it is made more than 35 days after entering into the hedging transaction.

(3) *Identification requirements for certain hedging transactions.* In the case of the hedging transactions described in this paragraph (f)(3), the identification under paragraph (f)(2) of this section must include the information specified.

(i) *Anticipatory asset hedges.* If the hedging transaction relates to the anticipated acquisition of assets by the taxpayer, the identification must include the expected date or dates of acquisition and the amounts expected to be acquired.

(ii) *Inventory hedges.* If the hedging transaction relates to the purchase or sale of inventory by the taxpayer, the identification is made by specifying the type or class of inventory to which the transaction relates. If the hedging transaction relates to specific purchases or sales, the identification must also include the expected dates of the purchases or sales and the amounts to be purchased or sold.

(iii) *Hedges of debt of the taxpayer*—(A) *Existing debt.* If the hedging transaction relates to accruals or payments under an issue of existing debt of the taxpayer, the identification must specify the issue and, if the hedge is for less than the full issue price or the full term of the debt, the amount of the issue price and the term covered by the hedge.

(B) *Debt to be issued.* If the hedging transaction relates to the expected issuance of debt by the taxpayer or to accruals or payments under debt that is expected to be issued by the taxpayer, the identification must specify the following information: the expected date of issuance of the debt; the expected maturity or maturities; the total expected issue price; and the expected interest provisions. If the hedge is for less than the entire expected issue price of the debt or the full expected term of the debt, the identification must also include the amount or the term being hedged. The identification may indicate a range of dates, terms, and amounts, rather than specific dates, terms, or amounts. For example, a taxpayer might identify a transaction as hedging the yield on an anticipated issuance of fixed rate debt during the second half of its fiscal year, with the anticipated amount of the debt between $75 million and $125 million, and an anticipated term of approximately 20 to 30 years.

(iv) *Hedges of aggregate risk*—(A) *Required identification.* If a transaction hedges aggregate risk as described in paragraph (c)(3) of this section, the identification under paragraph (f)(2) of this section must include a description of the risk being hedged and of the hedging program under which the hedging transaction was entered. This requirement may be met by placing in the taxpayer's records a description of the hedging program and by establishing a system under which individual transactions can be identified as being entered into pursuant to the program.

(B) *Description of hedging program.* A description of a hedging program must include an identification of the type of risk being hedged, a description of the type of items giving rise to the risk being aggregated, and sufficient additional information to demonstrate that the program is designed to reduce aggregate risk of the type identified. If the program contains controls on speculation (for example, position limits), the description of the hedging program must also explain how the controls are established, communicated, and implemented.

(v) *Transactions that counteract hedging transactions.* If the hedging transaction is described in paragraph (d)(3) of this section, the description of the hedging transaction must include an identification of the risk management transaction that is being offset and the original underlying hedged item.

(4) *Manner of identification and records to be retained*—(i) *Inclusion of identification in tax records.* The identification required by this paragraph (f) must be made on, and retained as part of, the taxpayer's books and records.

(ii) *Presence of identification must be unambiguous.* The presence of an identification for purposes of this paragraph (f) must be unambiguous. The identification of a hedging transaction for financial accounting or regulatory purposes does not satisfy this requirement unless the taxpayer's books and records indicate that the identification is also being made for tax purposes. The taxpayer may indicate that individual hedging transactions, or a class or classes of hedging transactions, that are identified for financial accounting or regulatory purposes are also being identified as hedging transactions for purposes of this section.

(iii) *Manner of identification.* The taxpayer may separately and explicitly make each identification, or, so long as paragraph (f)(4)(ii) of this section is satisfied, the taxpayer may establish a system pursuant to which the identification is indicated by the type of transaction or by the manner in which the transaction is consummated or recorded. An identification under this system is made at the later of the time that the system is established or the time that the transaction satisfies the terms of the system by being entered, or by being consummated or recorded, in the designated fashion.

(iv) *Principles of paragraph (f)(4)(iii) of this section illustrated.* Paragraphs (f)(4)(iv)(A) through (C) of this section illustrate the principles of paragraph (f)(4)(iii) of this section and assume that the other requirements of this paragraph (f) are satisfied.

(A) A taxpayer can make an identification by designating a hedging transaction for (or placing it in) an account that has been identified as containing only hedges of a specified item (or of specified items or specified aggregate risk).

(B) A taxpayer can make an identification by including and retaining in its books and records a statement that designates all future transactions in a specified derivative product as hedges of a specified item, items, or aggregate risk.

(C) A taxpayer can make an identification by designating a certain mark, a certain form, or a certain legend as meaning that a transaction is a hedge of a specified item (or of specified items or a specified aggregate risk). Identification can be made by placing the designated mark on a record of the transaction (for example, trading ticket, purchase order, or trade confirmation) or by using the designated form or a record that contains the designated legend.

(5) *Identification of hedges involving members of the same consolidated group*—(i) *General rule: single-entity approach.* A member of a consolidated group must satisfy the requirements of this paragraph (f) as if all of the members of the group were divisions of a single corporation. Thus, the member entering into the hedging transaction with a third party must identify the hedging transaction under paragraph (f)(1) of this section. Under paragraph (f)(2) of this section, that member must also identify the item, items, or aggregate risk that is being hedged, even if the item, items, or aggregate risk relates primarily or entirely to other members of the group. If the members of a group use intercompany transactions to transfer risk within the group, the requirements of paragraph (f)(2) of this section may be met by identifying the intercompany transactions, and the risks hedged by the intercompany transactions, as

hedges or hedged items, as appropriate. Because identification of the intercompany transaction as a hedge serves solely to identify the hedged item, the identification is timely if made within the period required by paragraph (f)(2) of this section. For example, if a member transfers risk in an intercompany transaction, it may identify under the rules of this paragraph (f) both its position in that transaction and the item, items, or aggregate risk being hedged. The member that hedges the risk outside the group may identify under the rules of this paragraph (f) both its position with the third party and its position in the intercompany transaction. Paragraph (e)(4) *Example 1* of this section illustrates this identification.

(ii) *Rule for consolidated groups making the separate-entity election.* If a consolidated group makes the separate-entity election under paragraph (e)(2) of this section, each member of the group must satisfy the requirements of this paragraph (f) as though it were not a member of a consolidated group.

(6) *Consistency with section 1256(e)(2).* Any identification for purposes of section 1256(e)(2) is also an identification for purposes of paragraph (f)(1) of this section.

(g) *Effect of identification and non-identification*—(1) *Transactions identified*—(i) *In general.* If a taxpayer identifies a transaction as a hedging transaction for purposes of paragraph (f)(1) of this section, the identification is binding with respect to gain, whether or not all of the requirements of paragraph (f) of this section are satisfied. Thus, gain from that transaction is ordinary income. If the transaction is not in fact a hedging transaction described in paragraph (b) of this section, however, paragraphs (a)(1) and (2) of this section do not apply and the character of loss is determined without reference to whether the transaction is a surrogate for a noncapital asset, serves as insurance against a business risk, serves a hedging function, or serves a similar function or purpose. Thus, the taxpayer's identification of the transaction as a hedging transaction does not itself make loss from the transaction ordinary.

(ii) *Inadvertent identification.* Notwithstanding paragraph (g)(1)(i) of this section, if the taxpayer identifies a transaction as a hedging transaction for purposes of paragraph (f) of this section, the character of the gain is determined as if the transaction had not been identified as a hedging transaction if—

(A) The transaction is not a hedging transaction (as defined in paragraph (b) of this section);

(B) The identification of the transaction as a hedging transaction was due to inadvertent error; and

(C) All of the taxpayer's transactions in all open years are being treated on either original or, if necessary, amended returns in a manner consistent with the principles of this section.

(2) *Transactions not identified*—(i) *In general.* Except as provided in paragraphs (g)(2)(ii) and (iii) of this section, the absence of an identification that satisfies the requirements of paragraph (f)(1) of this section is binding and establishes that a transaction is not a hedging transaction. Thus, subject to the exceptions, the rules of paragraphs (a)(1) and (2) of this section do not apply, and the character of gain or loss is determined without reference to whether the transaction is a surrogate for a noncapital asset, serves as insurance against a business risk, serves a hedging function, or serves a similar function or purpose.

(ii) *Inadvertent error.* If a taxpayer does not make an identification that satisfies the requirements of paragraph (f) of this section, the taxpayer may treat gain or loss from the transaction as ordinary income or loss under paragraph (a)(1) or (2) of this section if—

(A) The transaction is a hedging transaction (as defined in paragraph (b) of this section);

(B) The failure to identify the transaction was due to inadvertent error; and

(C) All of the taxpayer's hedging transactions in all open years are being treated on either original or, if necessary, amended returns as provided in paragraphs (a)(1) and (2) of this section.

(iii) *Anti-abuse rule.* If a taxpayer does not make an identification that satisfies all the requirements of paragraph (f) of this section but the taxpayer has no reasonable grounds for treating the transaction as other than a hedging transaction, then gain from the transaction is ordinary. The reasonableness of the taxpayer's failure to identify a transaction is determined by taking into consideration not only the requirements of paragraph (b) of this section but also the taxpayer's treatment of the transaction for financial accounting or other purposes and the taxpayer's identification of similar transactions as hedging transactions.

(3) *Transactions by members of a consolidated group*—(i) *Single-entity approach.* If a consolidated group is under the general rule of paragraph (e)(1) of this section (the single-entity approach), the rules of this paragraph (g) apply only to transactions that are not intercompany transactions.

(ii) *Separate-entity election.* If a consolidated group has made the election under paragraph (e)(2) of this section, then, in addition to the rules of paragraphs (g)(1) and (2) of this section, the following rules apply:

(A) If an intercompany transaction is identified as a hedging transaction but does not meet the requirements of paragraphs (e)(2)(ii)(A) and (B) of this section, then, notwithstanding any contrary provision in § 1.1502–13, each party to the transaction is subject to the rules of paragraph (g)(1) of this section with respect to the transaction as though it had incorrectly identified its position in the transaction as a hedging transaction.

(B) If a transaction meets the requirements of paragraphs (e)(2)(ii) (A) and (B) of this section but the transaction is not identified as a hedging transaction, each party to the transaction is subject to the rules of paragraph (g)(2) of this section. (Because the transaction is an intercompany hedging transaction, the character and timing rules of § 1.1502–13 do not apply. See paragraph (e)(2)(iii)(A) of this section.)

(h) *Effective date.* The rules of this section apply to transactions entered into on or after March 20, 2002.

Par. 4. Section 1.1256(e)–1 is revised to read as follows:

§ 1.1256(e)–1 Identification of hedging transactions.

(a) *Identification and recordkeeping requirements.* Under section 1256(e)(2), a taxpayer that enters into a hedging transaction must identify the transaction as a hedging transaction before the close of the day on which the taxpayer enters into the transaction.

(b) *Requirements for identification.* The identification of a hedging transaction for purposes of section 1256(e)(2) must satisfy the requirements of § 1.1221–2(f)(1). Solely for purposes of section 1256(f)(1), however, an identification that does not satisfy all of the requirements of § 1.1221–2(f)(1) is nevertheless treated as an identification under section 1256(e)(2).

(c) *Consistency with § 1.1221–2.* Any identification for purposes of § 1.1221–2(f)(1) is also an identification for purposes of this section. If a taxpayer satisfies the requirements of § 1.1221–2(f)(1)(ii), the transaction is treated as if it were not identified as a hedging transaction for purposes of section 1256(e)(2).

(d) *Effective date.* The rules of this section apply to transactions entered into on or after March 20, 2002.

PART 602—OMB CONTROL NUMBERS UNDER THE PAPERWORK REDUCTION ACT

Par. 5. The authority citation for part 602 continues to read as follows:

Authority: 26 U.S.C. 7805.

Par. 6. In § 602.101, paragraph (b) is amended by removing the entries for ''1.1221–2,'' ''1.1221–2(d)(2)(iv),'' ''1.1221–2(e)(5),'' ''1.1221–2(g)(5)(ii),'' ''1.1221–2(g)(6)(ii),'' ''1.1221–2(g)(6)(iii),'' and ''1.1221–2T(c)'' and adding an entry in numerical order to the table to read as follows:

§ 602.101 OMB Control numbers.

* * * * *

(b) * * *

CFR part or section where identified and described	Current OMB control No.
* * * * *	
1.1221–2	1545–1480
* * * * *	

Robert E. Wenzel,

Deputy Commissioner of Internal Revenue.

Approved: March 14, 2002.

Mark Weinberger,

Assistant Secretary of the Treasury.

[FR Doc. 02–6622 Filed 3–15–02; 8:54 am]

BILLING CODE 4830–01–P

DEPARTMENT OF TRANSPORTATION

Coast Guard

33 CFR Part 100

[CGD05–02–003]

RIN 2115–AE46

Special Local Regulations for Marine Events; St. Mary's River, St. Mary's City, MD

AGENCY: Coast Guard, DOT.

ACTION: Temporary final rule.

SUMMARY: The Coast Guard is adopting temporary special local regulations during the St. Mary's Seahawk Sprint, a marine event to be held on the waters of the St. Mary's River, St. Mary's City, Maryland. This action is necessary to provide for the safety of life on navigable waters during the event. This action is intended to restrict vessel traffic in portions of the St. Mary's River during the event.

DATES: This rule is effective from 7 a.m. to 4 p.m. eastern time on April 13, 2002.

ADDRESSES: Documents indicated in this preamble as being available in the docket, are part of docket CGD05–02–003 and are available for inspection or copying at Commander (Aoax), Fifth Coast Guard District, 431 Crawford Street, Portsmouth, Virginia 23704–5004, between 9 a.m. and 2 p.m., Monday through Friday, except Federal holidays.

FOR FURTHER INFORMATION CONTACT: S. L. Phillips, Project Manager, Auxiliary and Recreational Boating Safety Section, at (757) 398–6204.

SUPPLEMENTARY INFORMATION:

Regulatory Information

We did not publish a notice of proposed rulemaking (NPRM) for this regulation. In keeping with 5 U.S.C. 553(b)(B) and 553(d)(3), the Coast Guard finds that good cause exists for not publishing a NPRM and for making this rule effective less than 30 days after publication in the **Federal Register**. The event will occur on April 13, 2002, and numerous spectator craft are anticipated. Because of the danger posed to spectators and participants by other vessels transiting through the event area, it is in the public interest to have these regulations in effect during the event. In addition, advance notifications will be made via the Local Notice to Mariners, marine information broadcasts, and area newspapers.

Background and Purpose

St. Mary's College of Maryland will sponsor the St. Mary's Seahawk Sprint on April 13, 2002. The St. Mary's Seahawk Sprint consists of intercollegiate crew rowing teams racing along a 2000-meter course on the waters of the St. Mary's River. A fleet of spectator vessels is expected to gather near the event site to view the competition. To provide for the safety of event participants, spectators and transiting vessels, the Coast Guard will temporarily restrict vessel movement in the event area during the crew races.

Discussion of Rule

The Coast Guard is establishing temporary special local regulations on specified waters of the St. Mary's River. The temporary special local regulations will be in effect from 7 a.m. to 4 p.m. eastern time on April 13, 2002. The effect will be to restrict general navigation in the regulated area during the event. Except for persons or vessels authorized by the Coast Guard Patrol Commander, no person or vessel will be allowed to enter or remain in the regulated area. The Patrol Commander will allow non-participating vessels to transit the regulated area between races, when it is safe to do so. These regulations are needed to control vessel traffic during the event to enhance the safety of participants, spectators and transiting vessels.

Regulatory Evaluation

This rule is not a ''significant regulatory action'' under section 3(f) of Executive Order 12866 and does not require an assessment of potential costs and benefits under section 6(a)(3) of that Order. The Office of Management and Budget has not reviewed it under that Order. It is not significant under the regulatory policies and procedures of the Department of Transportation (DOT) (44 FR 11040; February 26, 1979).

Although this regulation prevents traffic from transiting a portion of the St. Mary's River during the event, the effect of this regulation will not be significant due to the limited duration that the regulated area will be in effect and the extensive advance notifications that will be made to the maritime community via the Local Notice to Mariners, marine information broadcasts, and area newspapers, so mariners can adjust their plans accordingly. Additionally, the regulated area has been narrowly tailored to impose the least impact on general navigation yet provide the level of safety deemed necessary.

Small Entities

Under the Regulatory Flexibility Act (5 U.S.C. 601—612), we considered whether this rule would have a significant economic impact on a substantial number of small entities. The term ''small entities'' comprises small businesses, not-for-profit organizations that are independently owned and operated and are not dominant in their fields, and governmental jurisdictions with populations of less than 50,000.

The Coast Guard certifies under 5 U.S.C. 605(b) that this rule will not have a significant economic impact on a substantial number of small entities.

This rule will affect the following entities, some of which may be small entities: the owners or operators of vessels intending to transit this section of St. Mary's River during the event.

Although this regulation prevents traffic from transiting a portion of the St. Mary's River during the event, the effect of this regulation will not be significant because of the limited duration that the regulated area will be in effect and the extensive advance notifications that will be made to the maritime community via the Local Notice to Mariners, marine information broadcasts, and area newspapers, so mariners can adjust their plans accordingly.

Assistance for Small Entities

Under section 213(a) of the Small Business Regulatory Enforcement Fairness Act of 1996 (Public Law 104–121), we want to assist small entities in understanding this rule so that they can better evaluate its effects on them and participate in the rulemaking process.

Small businesses may send comments on the actions of Federal employees who enforce, or otherwise determine compliance with, Federal regulations to the Small Business and Agriculture Regulatory Enforcement Ombudsman and the Regional Small Business Regulatory Fairness Boards. The Ombudsman evaluates these actions annually and rates each agency's responsiveness to small business. If you wish to comment on actions by employees of the Coast Guard, call 1–888–REG–FAIR (1–888–734–3247).

Collection of Information

This rule would call for no new collection of information under the Paperwork Reduction Act of 1995 (44 U.S.C. 3501–3520).

Federalism

A rule has implications for federalism under Executive Order 13132, Federalism, if it has a substantial direct effect on State law or local governments and would either preempt State law or impose a substantial direct cost of compliance on them. We have analyzed this rule under that Order and have determined that it does not have implications for federalism.

Unfunded Mandates Reform Act

The Unfunded Mandates Reform Act of 1995 (2 U.S.C. 1531–1538) requires Federal agencies to assess the effects of their discretionary regulatory actions. In particular, the Act addresses actions that may result in the expenditure by a State, local, or tribal government, in the aggregate, or by the private sector of $100,000,000 or more in any one year. Though this rule will not result in such expenditure, we do discuss the effects of this rule elsewhere in this preamble.

Taking of Private Property

This rule will not effect a taking of private property or otherwise have taking implications under Executive Order 12630, Governmental Actions and Interference with Constitutionally Protected Property Rights.

Civil Justice Reform

This rule meets applicable standards in sections 3(a) and 3(b)(2) of Executive Order 12988, Civil Justice Reform, to minimize litigation, eliminate ambiguity, and reduce burden.

Protection of Children

We have analyzed this rule under Executive Order 13045, Protection of Children from Environmental Health Risks and Safety Risks. This rule is not an economically significant rule and does not concern an environmental risk to health or risk to safety that may disproportionately affect children.

Indian Tribal Governments

This rule does not have tribal implications under Executive Order 13175, Consultation and Coordination with Indian Tribal Governments, because it would not have a substantial and direct effect on one or more Indian tribes, on the relationship between the Federal Government and Indian tribes, or on the distribution of power and responsibilities between the Federal Government and Indian tribes.

Energy Effects

We have analyzed this rule under Executive Order 13211, Actions Concerning Regulations That Significantly Affect Energy Supply, Distribution, or Use. We have determined that it is not a ''significant energy action'' under that order because it is not a ''significant regulatory action'' under Executive Order 12866 and is not likely to have a significant adverse effect on the supply, distribution, or use of energy. It has not been designated by the Administrator of the Office of Information and Regulatory Affairs as a significant energy action. Therefore, it does not require a Statement of Energy Effects under Executive Order 13211.

Environment

We considered the environmental impact of this rule and concluded that, under figure 2–1, paragraphs (34)(h) and (35)(a) of Commandant Instruction M16475.1D, this rule is categorically excluded from further environmental documentation. Special local regulations issued in conjunction with a regatta or marine parade permit for an event not located in, proximate to, or above an area designated as environmentally sensitive by an environmental agency of the Federal, state, or local government, are specifically excluded from further analysis and documentation under those sections. A ''Categorical Exclusion Determination'' is available in the docket where indicated under **ADDRESSES.**

List of Subjects in 33 CFR Part 100

Marine safety, Navigation (water), Reporting and recordkeeping requirements, Waterways.

For the reasons discussed in the preamble, the Coast Guard amends 33 CFR Part 100 as follows:

PART 100—SAFETY OF LIFE ON NAVIGABLE WATERS

1. The authority citation for part 100 continues to read as follows:

Authority: 33 U.S.C. 1233 through 1236; 49 CFR 1.46; 33 CFR 100.35.

2. Add a temporary section, § 100.35–T05–003 to read as follows:

§ 100.35–T05–003 St. Mary's River, St. Mary's City, Maryland.

(a) *Definitions:*

(1) *Coast Guard Patrol Commander.* The Coast Guard Patrol Commander is a commissioned, warrant, or petty officer of the Coast Guard who has been designated by the Commander, Coast Guard Activities Baltimore.

(2) *Official Patrol.* The Official Patrol is any vessel assigned or approved by Commander, Coast Guard Activities Baltimore with a commissioned, warrant, or petty officer on board and displaying a Coast Guard ensign.

(3) *Regulated Area.* The regulated area includes all waters of the St. Mary's River, from shoreline to shoreline, bounded to the south by a line at latitude 38°10′05″ North, and bounded to the north by a line at latitude 38°12′00″ North. All coordinates reference Datum NAD 1983.

(b) *Special Local Regulations:*

(1) Except for persons or vessels authorized by the Coast Guard Patrol Commander, no person or vessel may enter or remain in the regulated area.

(2) The operator of any vessel in this area shall:

(i) Stop the vessel immediately when directed to do so by any Official Patrol, including any commissioned, warrant, or petty officer on board a vessel displaying a Coast Guard ensign; and

(ii) Proceed as directed by any Official Patrol, including any commissioned, warrant, or petty officer on board a vessel displaying a Coast Guard ensign.

(c) *Effective Dates.* This section is in effect from 7 a.m. to 4 p.m. eastern time on April 13, 2002.

Dated: March 8, 2002.

Thad W. Allen,

Vice Admiral, U.S. Coast Guard, Commander, Fifth Coast Guard District.

[FR Doc. 02–6646 Filed 3–19–02; 8:45 am]

BILLING CODE 4910–15–U

DEPARTMENT OF TRANSPORTATION

Coast Guard

33 CFR Part 165

[COTP Los Angeles-Long Beach 02–003]

RIN 2115–AA97

Safety Zone; Long Beach, CA

AGENCY: Coast Guard, DOT.

ACTION: Temporary final rule.

SUMMARY: The Coast Guard has established a temporary safety zone in the navigable waters of Long Beach, California, for the National Water Ski Racing Association (NWSRA) Water Ski Race from 8 a.m. to 5 p.m. (PST) on March 23, 2002 and from 8 a.m. to 5 p.m. on March 24, 2002. This safety zone is necessary to provide for the safety of the crew and participants of the race and to protect the participating vessels. Persons and vessels are prohibited from entering into or transiting through this safety zone unless authorized by the Captain of the Port or his or her designated representative.

DATES: This rule is effective from 8 a.m. (PST) on March 23, 2002, to 5 p.m. on March 24, 2002.

ADDRESSES: Documents indicated in this preamble as being available in the docket are part of docket COTP Los Angeles-Long Beach 02–003 and are available for inspection or copying at U.S. Coast Guard Marine Safety Office/Group Los Angeles-Long Beach, 1001 S. Seaside Avenue, Building 20, San Pedro, California, 90731 between 8 a.m. and 4 p.m., Monday through Friday, except Federal holidays.

FOR FURTHER INFORMATION CONTACT: Boatswain's Mate Second Class Jessica Walsh, Waterways Management Division, at (310) 732–2020.

SUPPLEMENTARY INFORMATION:

Regulatory Information

On February 19, 2002, we published a notice of proposed rulemaking (NPRM) entitled ''Safety Zone; Long Beach, CA'' in the **Federal Register** (67 FR 7321). We received no letters from the public commenting on the proposed rule. No public hearing was requested, and none was held.

Under 5 U.S.C. 553(d)(3), the Coast Guard finds that good cause exists for making this rule effective less than 30 days after publication in the **Federal Register**. Waiting 30 days after publication would delay the effective date of this safety zone beyond the event date of March 23, 2002, and that would be contrary to the need for public safety during this event.

Background and Purpose

This temporary safety zone provides for the safety of National Water Ski Racing Association (NWSRA) water ski race participants and spectators on March 23 and 24, 2002, from 8 a.m. to 5 p.m. both days. Persons and vessels are prohibited from entering into or transiting through this zone unless authorized by the Captain of the Port or his or her designated representative. By prohibiting persons and vessels from entering the waters surrounding the racecourse, the risk of high-speed collision will be significantly reduced. The U.S. Coast Guard will enforce this safety zone with assistance from the U.S. Coast Guard Auxiliary and event staff.

The following area is safety zone: All waters encompassed by lines connecting the following points, beginning at latitude 33°45′50″ N, longitude 118°10′48″ W; thence to 33°44′00″ N, 118°10′05″ W; thence to 33°44′00″ N, 118°09′26″ W; thence to 33°45′28″ N, 118°09′00″ W, and thence returning to the point of origin (North American Datum of 1983). This area is approximately 3,000 yards wide and 2,500 yards long and is centered near the oil islands off Long Beach, California.

Discussion of Comments and Changes

We received no letters from the public commenting on the proposed rule. We made one editorial change from the proposed rule to clarify that the rule will be enforced during the hours listed in paragraph (b).

Regulatory Evaluation

This rule is not a ''significant regulatory action'' under section 3(f) of Executive Order 12866, Regulatory Planning and Review, and does not require an assessment of potential costs and benefits under section 6(a)(3) of that Order. The Office of Management and Budget has not reviewed it under that Order. It is not ''significant'' under the regulatory policies and procedures of the Department of Transportation (DOT) (44 FR 11040, February 26, 1979) because this safety zone will encompass a small portion of the waterway for limited periods of time and vessel traffic can pass safety around the affected area.

Small Entities

Under the Regulatory Flexibility Act (5 U.S.C. 601–612), we have considered whether this rule would have a significant economic impact on a substantial number of small entities. The term ''small entities'' comprises small businesses, not-for-profit organizations that are independently owned and operated and are not dominant in their fields, and governmental jurisdictions with populations of less than 50,000.

The Coast Guard certifies under 5 U.S.C. 605(b) that this rule will not have a significant economic impact on a substantial number of small entities.

We expect that this rule will affect the following entities, some of which may be small entities: The owners and operators of private and commercial vessels intending to transit or anchor in a small portion of the port of Long Beach. The impact to these entities would not, however, be significant since this zone will encompass a small portion of the waterway for limited periods of time.

We received no letters from the public commenting on the proposed rule's impact to small entities and no changes to the proposed rule were made.

Assistance for Small Entities

Under section 213(a) of the Small Business Regulatory Enforcement Fairness Act of 1996 (Pub. L. 104–121), we offered to assist small entities in understanding the rule so that they could better evaluate its effects on them and participate in the rulemaking process. No requests for assistance to small entities were received.

Small businesses may send comments on the actions of Federal employees who enforce, or otherwise determine compliance with, Federal regulations to the Small Business and Agriculture Regulatory Enforcement Ombudsman and the Regional Small Business Regulatory Fairness Boards. The Ombudsman evaluates these actions annually and rates each agency's responsiveness to small business. If you wish to comment on actions by employees of the Coast Guard, call 1–888–REG–FAIR (1–888–734–3247).

Collection of Information

This rule calls for no new collection of information under the Paperwork Reduction Act of 1995 (44 U.S.C. 3501–3520).

Federalism

A rule has implications for federalism under Executive Order 13132, Federalism, if it has a substantial direct effect on State or local governments and would either preempt State law or impose a substantial direct cost of compliance on them. We have analyzed this rule under that Order and have determined that it does not have implications for federalism.

We received no letters commenting on the proposed rule implications for federalism and no changes to the proposed rule were made.

Unfunded Mandates Reform Act

The Unfunded Mandates Reform Act of 1995 (2 U.S.C. 1531–1538) requires Federal agencies to assess the effects of their discretionary regulatory actions. In particular, the Act addresses actions that may result in the expenditure by a State, local, or tribal government, in the aggregate, or by the private sector of $100,000,000 or more in any one year. Though this rule will not result in such an expenditure, we do discuss the effects of this rule elsewhere in this preamble.

We received no letters commenting on the proposed rule and no changes to the proposed rule were made.

Taking of Private Property

This rule will not effect a taking of private property or otherwise have taking implications under Executive Order 12630, Governmental Actions and Interference with Constitutionally Protected Property Rights.

We received no letters commenting on the proposed rule effecting a taking of private property and no changes to the proposed rule were made.

Civil Justice Reform

This rule meets applicable standards in sections 3(a) and 3(b)(2) of Executive Order 12988, Civil Justice Reform, to minimize litigation, eliminate ambiguity, and reduce burden.

We received no letters commenting on the proposed rule complying with Civil Justice Reform and no changes to the proposed rule were made.

Protection of Children

We have analyzed this rule under Executive Order 13045, Protection of Children from Environmental Health Risks and Safety Risks. This rule is not an economically significant rule and does not create an environmental risk to health or risk to safety that may disproportionately affect children.

We received no letters commenting on the proposed rule environmental risks to children and no changes to the proposed rule were made.

Indian Tribal Governments

This rule does not have tribal implications under Executive Order 13175, Consultation and Coordination with Indian Tribal Governments, because it does not have a substantial direct effect on one or more Indian tribes, on the relationship between the Federal Government and Indian tribes, or on the distribution of power and responsibilities between the Federal Government and Indian tribes.

We received no letters commenting on the proposed rule implications for tribal governments and no changes to the proposed rule were made.

Energy Effects

We have analyzed this rule under Executive Order 13211, Actions Concerning Regulations That Significantly Affect Energy Supply, Distribution, or Use. We have determined that it is not a ''significant energy action'' under that order because it is not a ''significant regulatory action'' under Executive Order 12866 and is not likely to have a significant adverse effect on the supply, distribution, or use of energy. It has not been designated by the Administrator of the Office of Information and Regulatory Affairs as a significant energy action. Therefore, it does not require a Statement of Energy Effects under Executive Order 13211.

We received no letters commenting on the proposed rule effect on energy and no changes to the proposed rule were made.

Environment

We have considered the environmental impact of this rule and concluded that under figure 2–1, paragraph (34)(g), of Commandant Instruction M16475.lD, this rule is categorically excluded from further environmental documentation because it is a safety zone in effect for only 2 days. A ''Categorical Exclusion Determination'' is not required.

We received no letters commenting on the proposed rule environmental impact and no changes to the proposed rule were made.

List of Subjects in 33 CFR Part 165

Harbors, Marine safety, Navigation (water), Reporting and recordkeeping requirements, Security measures, Waterways.

For the reasons discussed in the preamble, the Coast Guard amends 33 CFR part 165 as follows:

PART 165—REGULATED NAVIGATION AREAS AND LIMITED ACCESS AREAS

1. The authority citation for part 165 continues to read as follows:

Authority: 33 U.S.C. 1231; 50 U.S.C. 191, 33 CFR 1.05–1(g), 6.04–1, 6.04–6, 160.5; 49 CFR 1.46.

2. From 8 a.m. on March 23, 2002, to 5 p.m. on March 24, 2002, add § 165.T11–063 to read as follows:

§ 165.T11–063 Safety Zone; Long Beach, CA.

(a) Location. The following area is a safety zone: All waters encompassed by lines connecting the following points, beginning at latitude 33°45′50″ N, longitude 118°10′48″ W; thence to 33°44′00″ N, 118°10′05″ W; thence to 33°44′00″ N, 118°09′26″ W; thence to 33°45′28″ N, 118°09′00″ W; and thence returning to the point of origin. (NAD83)

(b) Enforcement period. This section will be enforced from 8 a.m. to 5 p.m. (PST) on March 23, 2002 and from 8 a.m. to 5 p.m. (PST) on March 24, 2002.

(c) Regulations. In accordance with the general regulations in § 165.23 of this part entry into, transit through, or anchoring within the safety zone is prohibited unless authorized by the Coast Guard Captain of the Port, Los Angeles-Long Beach, or his or her designated representative.

Dated: March 6, 2002.

J. M. Holmes,

Captain, U. S. Coast Guard, Captain of the Port, Los Angeles-Long Beach, California.

[FR Doc. 02–6647 Filed 3–19–02 8:45am]

BILLING CODE 4910–15–U

ENVIRONMENTAL PROTECTION AGENCY

40 CFR Part 82

[FRL–7160–3]

Protection of Stratospheric Ozone: Removal of Restrictions on Certain Fire Suppression Substitutes for Ozone-Depleting Substances; and Listing of Substitutes; Correction

AGENCY: Environmental Protection Agency.

ACTION: Direct final rule, correction.

SUMMARY: The Environmental Protection Agency published in the **Federal Register** of January 29, 2002, a direct final rule related to the Significant New Alternatives Policy (SNAP) program. A couple of typographical errors in chemical formulas were made inadvertently. This document identifies and corrects these errors.

DATES: These corrections are effective on April 1, 2002.

FOR FURTHER INFORMATION CONTACT: Margaret Sheppard by telephone at (202) 564–9163, by fax at (202) 565–2141, by e-mail at *sheppard.margaret@epa.gov*, or by mail at U.S. Environmental Protection Agency, Mail Code 6205J, Washington, DC 20460. Overnight or courier deliveries should be sent to the office location at 501 3rd Street, NW.,

Washington, DC, 20001. Further information can be found by calling the Stratospheric Protection Hotline at (800) 296–1996, or by viewing EPA's Ozone Depletion World Wide Web site at *www.epa.gov/ozone/title6/snap/.*

SUPPLEMENTARY INFORMATION: The Environmental Protection Agency published in the **Federal Register** of January 29, 2002 (66 FR 4185), a Direct Final Rule related to the Significant New Alternatives Policy (SNAP). In FR Doc. 02–1495, published on January 29, 2002, a couple of typographical errors to chemical formulas were made inadvertently. This document identifies and corrects these errors.

In FR Doc. 02–1495, published on January 29, 2002 (66 FR 4185), make the following corrections:

1. On page 4191 in the last paragraph of the third column, correct the formula ''C_4H_{10}'' to read ''C_4F_{10}.''

2. On page 4200 in the third column, amendatory instruction 3a. is corrected to read as follows:

a. Revising the table entitled ''Fire Suppression and Explosion Protection—Acceptable Subjects to Use Conditions: Total Flooding Agents'' by removing the entries ''C_3F_8'', ''CF_3I'' and ''Gelled Halocarbon/Dry Chemical Suspension''.

Administrative Requirements

Section 553 of the Administrative Procedure Act, 5 U.S.C. 553(b)(B), provides that, when an agency for good cause finds that notice and public procedure are impracticable, unnecessary or contrary to the public interest, the agency may issue a rule without providing notice and an opportunity for public comment. We have determined that there is good cause for making today's rule final without prior proposal and opportunity for comment because we are merely correcting an incorrect citation in a previous action. Thus, notice and public procedure are unnecessary. We find that this constitutes good cause under 5 U.S.C. 553(b)(B).

Under Executive Order 12866 (58 FR 51735, October 4, 1993), this correction is not a ''significant regulatory action'' and is therefore not subject to review by the Office of Management and Budget (OMB). Because the EPA has made a ''good cause'' finding that this correction is not subject to notice and comment requirements under the Administrative Procedure Act or any other statute, it is not subject to the regulatory flexibility provisions of the Regulatory Flexibility Act (5 U.S.C. 601 *et seq.*), or to sections 202 and 205 of the Unfunded Mandates Reform Act of 1995 (UMRA) (Public Law 104–4). In addition, this correction does not significantly or uniquely affect small governments or impose a significant intergovernmental mandate, as described in sections 203 and 204 of the UMRA. This correction also does not significantly or uniquely affect the communities of tribal governments, as specified by Executive Order 13175 (65 FR 67249, November 6, 2000). This correction does not have substantial direct effects on the States, or on the relationship between the national government and the States, as specified in Executive Order 13132 (64 FR 43255, August 10, 1999). This correction also is not subject to Executive Order 13045 (62 FR 19885, April 23, 1997) because it is not economically significant. This rule is not a ''significant energy action'' as defined in Executive Order 13211, ''Actions Concerning Regulations That Significantly Affect Energy Supply, Distribution, or Use'' (66 FR 28355 (May 22, 2001)) because it is not likely to have a significant adverse effect on the supply, distribution, or use of energy.

This correction does not involve technical standards; thus, the requirements of section 12(d) of the National Technology Transfer and Advancement Act (NTTAA) of 1995 (15 U.S.C. 272) do not apply. This correction also does not involve special consideration of environmental justice related issues as required by Executive Order 12898 (59 FR 7629, February 16, 1994). This correction does not impose an information collection burden under the provisions of the Paperwork Reduction Act of 1995 (44 U.S.C. 3501 *et seq.*). The EPA's compliance with these statutes and Executive Orders for the underlying rule is discussed in the rule for the Removal of Restrictions on Certain Fire Suppression Substitutes for Ozone-Depleting Substances; and Listing of Substitutes.

The Congressional Review Act (5 U.S.C. 801 *et seq.*), as added by the Small Business Regulatory Enforcement Fairness Act of 1996, generally provides that before a rule may take effect, the agency promulgating the rule must submit a rule report, which includes a copy of the rule, to each House of the Congress and to the Comptroller General of the United States. Section 808 allows the issuing agency to make a rule effective sooner than otherwise provided by the Congressional Review Act if the agency makes a good cause finding that notice and public procedure is impracticable, unnecessary, or contrary to the public interest. This determination must be supported by a brief statement (5 U.S.C. 808(2)). As stated previously, the EPA has made such a good cause finding, including the reasons therefor, and established an effective date of April 1, 2002. The EPA will submit a report containing this rule and other required information to the U.S. Senate, the U.S. House of Representatives, and the Comptroller General of the United States prior to publication of the correction in the **Federal Register**. This correction is not a ''major rule'' as defined by 5 U.S.C. 804(2).

List of Subjects in 40 CFR Part 82

Environmental protection, Administrative practice and procedure, Air pollution control, Reporting and recordkeeping requirements.

Dated: February 25, 2002.

Drusilla Hufford,

Director, Global Programs Division.

[FR Doc. 02–6722 Filed 3–19–02; 8:45 am]

BILLING CODE 6560–50–P

ENVIRONMENTAL PROTECTION AGENCY

40 CFR Part 180

[OPP–301224; FRL–6828–5]

2070–AB78

Isoxadifen-ethyl; Pesticide Tolerance

AGENCY: Environmental Protection Agency (EPA).

ACTION: Final rule.

SUMMARY: This regulation establishes tolerances for combined residues of isoxadifen-ethyl (ethyl 5,5-diphenyl-2-isoxazoline-3-carboxylate, (CAS No. 163520–33–0), and its metabolite: 4,5-dihydro-5,5-diphenyl-3-isoxazolecarboxylic acid, in or on corn commodities. Aventis CropScience requested this tolerance under the Federal Food, Drug, and Cosmetic Act (FFDCA), as amended by the Food Quality Protection Act (FQPA) of 1996.

DATES: This regulation is effective March 20, 2002. Objections and requests for hearings, identified by docket control number OPP–301224, must be received by EPA on or before May 20, 2002.

ADDRESSES: Written objections and hearing requests may be submitted by mail, in person, or by courier. Please follow the detailed instructions for each method as provided in Unit VI. of the **SUPPLEMENTARY INFORMATION**. To ensure proper receipt by EPA, your objections and hearing requests must identify docket control number OPP–301224 in the subject line on the first page of your response.

FOR FURTHER INFORMATION CONTACT: By mail: Kathryn Boyle, Registration

Division (7505C), Office of Pesticide Programs, Environmental Protection Agency, 1200 Pennsylvania Ave., NW.,Washington, DC 20460; telephone number: (703) 305–6304; and e-mail address: boyle.kathryn@epa.gov.

SUPPLEMENTARY INFORMATION:

I. General Information

A. Does this Action Apply to Me?

You may be affected by this action if you are an agricultural producer, food manufacturer, or pesticide manufacturer. Potentially affected categories and entities may include, but are not limited to:

Categories	NAICS Codes	Examples of Potentially Affected Entities
Industry	111 112 311 32532	Crop production Animal production Food manufacturing Pesticide manufacturing

This listing is not intended to be exhaustive, but rather provides a guide for readers regarding entities likely to be affected by this action. Other types of entities not listed in the table could also be affected. The North American Industrial Classification System (NAICS) codes have been provided to assist you and others in determining whether or not this action might apply to certain entities. If you have questions regarding the applicability of this action to a particular entity, consult the person listed under **FOR FURTHER INFORMATION CONTACT**.

B. How Can I Get Additional Information, Including Copies of this Document and Other Related Documents?

1. *Electronically*. You may obtain electronic copies of this document, and certain other related documents that might be available electronically, from the EPA Internet Home Page at http://www.epa.gov/. To access this document, on the Home Page select ''Laws and Regulations,'' ''Regulations and Proposed Rules,'' and then look up the entry for this document under the ''**Federal Register**—Environmental Documents.'' You can also go directly to the **Federal Register** listings at http://www.epa.gov/fedrgstr/. A frequently updated electronic version of 40 CFR part 180 is available at http://www.access.gpo.gov/nara/cfr/cfrhtml_00/Title_40/40cfr180_00.html, a beta site currently under development.

2. *In person*. The Agency has established an official record for this action under docket control number OPP–301224. The official record consists of the documents specifically referenced in this action, and other information related to this action, including any information claimed as Confidential Business Information (CBI). This official record includes the documents that are physically located in the docket, as well as the documents that are referenced in those documents. The public version of the official record does not include any information claimed as CBI. The public version of the official record, which includes printed, paper versions of any electronic comments submitted during an applicable comment period is available for inspection in the Public Information and Records Integrity Branch (PIRIB), Rm. 119, Crystal Mall #2, 1921 Jefferson Davis Hwy., Arlington, VA, from 8:30 a.m. to 4 p.m., Monday through Friday, excluding legal holidays. The PIRIB telephone number is (703) 305–5805.

II. Background and Statutory Findings

In the **Federal Register** of June 30, 2000 (65 FR 40632) (FRL–6592–6), EPA issued a notice pursuant to section 408 of the Federal Food, Drug, and Cosmetic Act (FFDCA), 21 U.S.C. 346a as amended by the FQPA of 1996 (Public Law 104–170) announcing the filing of a pesticide petition (PP 0E6162) for a tolerance by Aventis CropScience, P.O. Box 12014, 2 T.W. Alexander Dr., Research Triangle Park, NC 27709. This notice included a summary of the petition prepared by Aventis CropScience, the petitioner. There were no comments received in response to the notice of filing.

The petition requested that 40 CFR 180.570 be amended by establishing a tolerance for the combined residues of the inert ingredient, herbicide safener isoxadifen-ethyl (ethyl 5,5-diphenyl-2-isoxazoline-3-carboxylate, (CAS No. 163520–33–0), and its metabolite: 4,5-dihydro-5,5-diphenyl-3-isoxazolecarboxylic acid, in or on corn, grain at 0.10 part per million (ppm); corn, forage at 0.30 ppm; and corn, stover 0.50 (ppm). The Agency determined that the tolerance levels should be changed (lowered) and that the corn commodities should be expressed as in the Food and Feed Vocabulary; therefore, the tolerance levels are corn, field, grain and corn, field, forage both at 0.10 ppm and corn, field, stover at 0.20 ppm.

Section 408(b)(2)(A)(i) of the FFDCA allows EPA to establish a tolerance (the legal limit for a pesticide chemical residue in or on a food) only if EPA determines that the tolerance is ''safe.'' Section 408(b)(2)(A)(ii) defines ''safe'' to mean that ''there is a reasonable certainty that no harm will result from aggregate exposure to the pesticide chemical residue, including all anticipated dietary exposures and all other exposures for which there is reliable information.'' This includes exposure through drinking water and in residential settings, but does not include occupational exposure. Section 408(b)(2)(C) requires EPA to give special consideration to exposure of infants and children to the pesticide chemical residue in establishing a tolerance and to ''ensure that there is a reasonable certainty that no harm will result to infants and children from aggregate exposure to the pesticide chemical residue. . . .''

EPA performs a number of analyses to determine the risks from aggregate exposure to pesticide residues. For further discussion of the regulatory requirements of section 408 and a complete description of the risk assessment process, see the final rule on Bifenthrin Pesticide Tolerances November 26, 1997 (62 FR 62961) (FRL–5754–7).

III. Aggregate Risk Assessment and Determination of Safety

Consistent with section 408(b)(2)(D), EPA has reviewed the available scientific data and other relevant information in support of this action. EPA has sufficient data to assess the hazards of and to make a determination on aggregate exposure, consistent with section 408(b)(2), for a tolerance for combined residues of isoxadifen-ethyl (ethyl 5,5-diphenyl-2-isoxazoline-3-carboxylate, (CAS No. 163520–33–0), and its metabolite: 4,5-dihydro-5,5-diphenyl-3-isoxazolecarboxylic acid, on corn commodities.

EPA's assessment of exposures and risks associated with establishing the above tolerances was published in the **Federal Register** of June 21, 2001 (66 FR 33179) (FRL–6786–1), when the time-limited tolerances (expiring June 21, 2004) for combined residues of isoxadifen-ethyl for rice commodities were established. The assessment that was discussed in the above final rule considered both corn and rice. All risks were less than the Agency's level of concern. The corn tolerances were not established at that time, since the enforcement method for corn had not yet been validated. For a complete description of the toxicological profile and endpoints, the uncertainty factors, the exposure assessment which includes dietary exposure for both food and drinking water, the safety factor for infants and children, and aggregate risk

for isoxadifen-ethyl see the final rule of June 21, 2001.

Based on the previous published assessment, EPA concludes that there is a reasonable certainty that no harm will result to the general population, and to infants and children from aggregate exposure to residues of isoxadifen-ethyl (ethyl 5,5-diphenyl-2-isoxazoline-3-carboxylate, (CAS No. 163520–33–0), and its metabolite: 4,5-dihydro-5,5-diphenyl-3-isoxazolecarboxylic acid, on corn, field, grain and corn, field, forage both at 0.10 ppm and corn, field, stover at 0.20 ppm.

IV. Other Considerations

A. Analytical Enforcement Methodology

The petitioner submitted the results of an Independent Laboratory Validation (ILV) for isoxadifen-ethyl and its major metabolites. The method is gas chromotography using ion trap mass selective detection. The ILV reported that overall the method worked well. There is thus a practical method suitable to enforce the tolerance expression. The method may be requested from: Calvin Furlow, PIRIB, IRSD (7502C), Office of Pesticide Programs, Environmental Protection Agency, 1200 Pennsylvania Ave., NW., Washington, DC 20460; telephone number: (703) 305–5229; e-mail address: furlow.calvin@epa.gov.

B. International Residue Limits

There are no CODEX, Canadian, or Mexican tolerances/MRLs for isoxadifen-ethyl residues.

C. Conditions

The following data gap has been identified for isoxadifen-ethyl in/on corn: storage stability data. Preliminary results only have been submitted as the study is still on-going. The Agency believes that the available data and risk assessment support the determination that there is a reasonable certainty of no harm and the establishment of permanent tolerances for isoxadifen-ethyl in/on corn. The registration of a formulation containing isoxadifen-ethyl will be time-limited and conditional upon submission of this information.

V. Conclusion

Therefore, tolerances are established for residues of isoxadifen-ethyl (ethyl 5,5-diphenyl-2-isoxazoline-3-carboxylate, (CAS No. 163520–33–0), and its metabolite: 4,5-dihydro-5,5-diphenyl-3-isoxazolecarboxylic acid, on corn, field, grain and corn, field, forage both at 0.10 ppm and corn, field, stover at 0.20 ppm.

VI. Objections and Hearing Requests

Under section 408(g) of the FFDCA, as amended by the FQPA, any person may file an objection to any aspect of this regulation and may also request a hearing on those objections. The EPA procedural regulations which govern the submission of objections and requests for hearings appear in 40 CFR part 178. Although the procedures in those regulations require some modification to reflect the amendments made to the FFDCA by the FQPA of 1996, EPA will continue to use those procedures, with appropriate adjustments, until the necessary modifications can be made. The new section 408(g) provides essentially the same process for persons to ''object'' to a regulation for an exemption from the requirement of a tolerance issued by EPA under new section 408(d), as was provided in the old FFDCA sections 408 and 409. However, the period for filing objections is now 60 days, rather than 30 days.

A. What Do I Need to Do to File an Objection or Request a Hearing?

You must file your objection or request a hearing on this regulation in accordance with the instructions provided in this unit and in 40 CFR part 178. To ensure proper receipt by EPA, you must identify docket control number OPP–301224 in the subject line on the first page of your submission. All requests must be in writing, and must be mailed or delivered to the Hearing Clerk on or before May 20, 2002.

1. *Filing the request.* Your objection must specify the specific provisions in the regulation that you object to, and the grounds for the objections (40 CFR 178.25). If a hearing is requested, the objections must include a statement of the factual issues(s) on which a hearing is requested, the requestor's contentions on such issues, and a summary of any evidence relied upon by the objector (40 CFR 178.27). Information submitted in connection with an objection or hearing request may be claimed confidential by marking any part or all of that information as CBI. Information so marked will not be disclosed except in accordance with procedures set forth in 40 CFR part 2. A copy of the information that does not contain CBI must be submitted for inclusion in the public record. Information not marked confidential may be disclosed publicly by EPA without prior notice.

Mail your written request to: Office of the Hearing Clerk (1900), Environmental Protection Agency, 1200 Pennsylvania Ave., NW., Washington, DC 20460. You may also deliver your request to the Office of the Hearing Clerk in Rm. C400, Waterside Mall, 401 M St., SW., Washington, DC 20460. The Office of the Hearing Clerk is open from 8 a.m. to 4 p.m., Monday through Friday, excluding legal holidays. The telephone number for the Office of the Hearing Clerk is (202) 260–4865.

2. *Tolerance fee payment.* If you file an objection or request a hearing, you must also pay the fee prescribed by 40 CFR 180.33(i) or request a waiver of that fee pursuant to 40 CFR 180.33(m). You must mail the fee to: EPA Headquarters Accounting Operations Branch, Office of Pesticide Programs, P.O. Box 360277M, Pittsburgh, PA 15251. Please identify the fee submission by labeling it ''Tolerance Petition Fees.''

EPA is authorized to waive any fee requirement ''when in the judgement of the Administrator such a waiver or refund is equitable and not contrary to the purpose of this subsection.'' For additional information regarding the waiver of these fees, you may contact James Tompkins by phone at (703) 305–5697, by e-mail at tompkins.jim@epa.gov, or by mailing a request for information to Mr. Tompkins at Registration Division (7505C), Office of Pesticide Programs, Environmental Protection Agency, 1200 Pennsylvania Ave., NW., Washington, DC 20460.

If you would like to request a waiver of the tolerance objection fees, you must mail your request for such a waiver to: James Hollins, Information Resources and Services Division (7502C), Office of Pesticide Programs, Environmental Protection Agency, 1200 Pennsylvania Ave., NW., Washington, DC 20460.

3. *Copies for the docket.* In addition to filing an objection or hearing request with the Hearing Clerk as described in Unit VI.A., you should also send a copy of your request to the PIRIB for its inclusion in the official record that is described in Unit I.B.2. Mail your copies, identified by docket control number OPP–301224, to: Public Information and Records Integrity Branch, Information Resources and Services Division (7502C), Office of Pesticide Programs, Environmental Protection Agency, 1200 Pennsylvania Ave., NW., Washington, DC 20460. In person or by courier, bring a copy to the location of the PIRIB described in Unit I.B.2. You may also send an electronic copy of your request via e-mail to: opp-docket@epa.gov. Please use an ASCII file format and avoid the use of special characters and any form of encryption. Copies of electronic objections and hearing requests will also be accepted on disks in WordPerfect 6.1/8.0 or ASCII file format. Do not include any CBI in your electronic copy. You may also submit an electronic copy of your

request at many Federal Depository Libraries.

B. When Will the Agency Grant a Request for a Hearing?

A request for a hearing will be granted if the Administrator determines that the material submitted shows the following: There is a genuine and substantial issue of fact; there is a reasonable possibility that available evidence identified by the requestor would, if established resolve one or more of such issues in favor of the requestor, taking into account uncontested claims or facts to the contrary; and resolution of the factual issues(s) in the manner sought by the requestor would be adequate to justify the action requested (40 CFR 178.32).

VII. Regulatory Assessment Requirements

This final rule establishes a tolerance under FFDCA section 408(d) in response to a petition submitted to the Agency. The Office of Management and Budget (OMB) has exempted these types of actions from review under Executive Order 12866, entitled *Regulatory Planning and Review* (October 4, 1993 58 FR 51735). Because this rule has been exempted from review under Executive Order 12866 due to its lack of significance, this rule is not subject to Executive Order 13211, *Actions Concerning Regulations That Significantly Affect Energy Supply, Distribution, or Use* May 22, 2001 (66 FR 28355). This final rule does not contain any information collections subject to OMB approval under the Paperwork Reduction Act (PRA), 44 U.S.C. 3501 *et seq.*, or impose any enforceable duty or contain any unfunded mandate as described under Title II of the Unfunded Mandates Reform Act of 1995 (UMRA) (Public Law 104–4). Nor does it require any special considerations under Executive Order 12898, entitled *Federal Actions to Address Environmental Justice in Minority Populations and Low-Income Populations* February 16, 1994, (59 FR 7629) or OMB review or any Agency action under Executive Order 13045, entitled *Protection of Children from Environmental Health Risks and Safety Risks* (62 FR 19885, April 23, 1997). This action does not involve any technical standards that would require Agency consideration of voluntary consensus standards pursuant to section 12(d) of the National Technology Transfer and Advancement Act of 1995 (NTTAA), Public Law 104–113, section 12(d) (15 U.S.C. 272 note). Since tolerances and exemptions that are established on the basis of a petition under FFDCA section 408(d), such as the tolerance in this final rule, do not require the issuance of a proposed rule, the requirements of the Regulatory Flexibility Act (RFA) (5 U.S.C. 601 *et seq*) do not apply. In addition, the Agency has determined that this action will not have a substantial direct effect on States, on the relationship between the national government and the States, or on the distribution of power and responsibilities among the various levels of government, as specified in Executive Order 13132, entitled *Federalism* (64 FR 43255, August 10, 1999). Executive Order 13132 requires EPA to develop an accountable process to ensure ''meaningful and timely input by State and local officials in the development of regulatory policies that have federalism implications.'' ''Policies that have federalism implications'' is defined in the Executive Order to include regulations that have ''substantial direct effects on the States, on the relationship between the national government and the States, or on the distribution of power and responsibilities among the various levels of government.'' This final rule directly regulates growers, food processors, food handlers and food retailers, not States. This action does not alter the relationships or distribution of power and responsibilities established by Congress in the preemption provisions of FFDCA section 408(n)(4). For these same reasons, the Agency has determined that this rule does not have any ''tribal implications'' as described in Executive Order 13175, entitled *Consultation and Coordination with Indian Tribal Governments* (65 FR 67249, November 6, 2000). Executive Order 13175, requires EPA to develop an accountable process to ensure ''meaningful and timely input by tribal officials in the development of regulatory policies that have tribal implications.'' ''Policies that have tribal implications'' is defined in the Executive Order to include regulations that have ''substantial direct effects on one or more Indian tribes, on the relationship between the Federal government and the Indian tribes, or on the distribution of power and responsibilities between the Federal government and Indian tribes.'' This rule will not have substantial direct effects on tribal governments, on the relationship between the Federal government and Indian tribes, or on the distribution of power and responsibilities between the Federal government and Indian tribes, as specified in Executive Order 13175. Thus, Executive Order 13175 does not apply to this rule.

VIII. Submission to Congress and the Comptroller General

The Congressional Review Act, 5 U.S.C. 801 *et seq.*, as added by the Small Business Regulatory Enforcement Fairness Act of 1996, generally provides that before a rule may take effect, the agency promulgating the rule must submit a rule report, which includes a copy of the rule, to each House of the Congress and to the Comptroller General of the United States. EPA will submit a report containing this rule and other required information to the U.S. Senate, the U.S. House of Representatives, and the Comptroller General of the United States prior to publication of this final rule in the **Federal Register**. This final rule is not a ''major rule'' as defined by 5 U.S.C. 804(2).

List of Subjects in 40 CFR Part 180

Environmental protection, Administrative practice and procedure, Agricultural commodities, Pesticides and pests, Reporting and recordkeeping requirements.

Dated: March 11, 2002.

Peter Caulkins,

Acting Director, Registration Division, Office of Pesticide Programs.

Therefore, 40 CFR chapter I is amended as follows:

PART 180—[AMENDED]

1. The authority citation for part 180 continues to read as follows:

Authority: 21 U.S.C. 321(q), 346(a) and 374.

2. Section 180.570 is amended by revising paragraph (a) to read as follows:

§ 180.570 Isoxadifen-ethyl; tolerances for residues.

(a) *General.* (1) Tolerances are established for residues of isoxadifen-ethyl (ethyl 5,5-diphenyl-2-isoxazoline-3-carboxylate, (CAS No. 163520–33–0), and its metabolite: 4,5-dihydro-5,5-diphenyl-3-isoxazolecarboxylic acid, when used as an inert ingredient (safener) in or on the following raw agricultural commodities when applied at an annual application rate of 0.08 pound of safener per acre.

Commodity	Parts per million
Corn, field, grain	0.10
Corn, field, forage	0.10
Corn, field, stover	0.20

(2) Tolerances that expire as indicated in the table below are established for residues of isoxadifen-ethyl (ethyl 5,5-diphenyl-2-isoxazoline-3-carboxylate, CAS No. 163520–33–0) and its metabolites: 4,5-dihydro-5,5-diphenyl-3-isoxazolecarboxylic acid and β-hydroxy-β-benezenepropanenitrile when in the commodities listed below. This safener will be used only in conjunction with the active ingredient fenoxaprop-*p*-ethyl, at a rate of 0.17 pound of safener per acre.

Commodity	Parts per million	Expiration/Revocation Date
Rice, bran	0.80	6/21/04
Rice, grain	0.10	6/21/04
Rice, hulls	0.50	6/21/04
Rice, straw	0.25	6/21/04

* * * * *

[FR Doc. 02–6727 Filed 3–19–02; 8:45 am]

BILLING CODE 6560–50–S

ENVIRONMENTAL PROTECTION AGENCY

40 CFR Part 721

[OPPTS–50644A; FRL–6817–8]

RIN 2070–AB27

Modification of Significant New Uses of Certain Chemical Substances

AGENCY: Environmental Protection Agency (EPA).

ACTION: Final rule.

SUMMARY: Under section 5(a)(2) of the Toxic Substances Control Act (TSCA) and 40 CFR 721.185, EPA is amending three significant new use rules (SNURs) to allow certain uses without requiring a significant new use notice (SNUN). EPA is amending these rules based on review of new toxicity test data on one chemical and review of SNUNs for the other two chemicals. The amended SNURs would continue to require a SNUN for new uses that may involve significant changes in human or environmental exposure.

DATES: This rule is effective May 20, 2002.

FOR FURTHER INFORMATION CONTACT: *For general information contact*: Barbara Cunningham, Acting Director, Environmental Assistance Division, Office of Pollution Prevention and Toxics (7408M), Environmental Protection Agency, 1200 Pennsylvania Ave., NW., Washington, DC 20460; telephone number: (202) 554–1404; e-mail address: TSCA-Hotline@epa.gov.

For technical information contact: James Alwood, Chemical Control Division, Office of Pollution Prevention and Toxics (7405M), Environmental Protection Agency, 1200 Pennsylvania Ave., NW., Washington, DC 20460; telephone number: (202) 564–8974; e-mail address: alwood.jim@epa.gov.

SUPPLEMENTARY INFORMATION:

I. General Information

A. Does this Action Apply to Me?

You may be potentially affected by this action if you manufacture, import, process, or use the chemical substances contained in this rule. Potentially affected categories and entities may include, but are not limited to:

Categories	NAICS codes	Examples of potentially affected entities
Chemical manufacturers	325	Manufacturers, importers, processors, and users of chemicals
Petroleum and coal product industries	324	Manufacturers, importers, processors, and users of chemicals

This listing is not intended to be exhaustive, but rather provides a guide for readers regarding entities likely to be affected by this action. Other types of entities not listed in the table in this unit could also be affected. The North American Industrial Classification System (NAICS) codes have been provided to assist you and others in determining whether or not this action applies to certain entities. To determine whether you or your business is affected by this action, you should carefully examine the applicability provisions in title 40 of the Code of Federal Regulations (CFR) at 40 CFR 721.5. If you have any questions regarding the applicability of this action to a particular entity, consult the technical person listed under **FOR FURTHER INFORMATION CONTACT.**

B. How Can I Get Additional Information, Including Copies of this Document and Other Related Documents?

1. *Electronically*. You may obtain electronic copies of this document, and certain other related documents that might be available electronically, from the EPA Internet Home Page at http://www.epa.gov/. To access this document, on the Home Page select ''Laws and Regulations,'' ''Regulations and Proposed Rules,'' and then look up the entry for this document under the ''**Federal Register—**Environmental Documents.'' You can also go directly to the **Federal Register** listings at http://www.epa.gov/fedrgstr/. A frequently updated electronic version of 40 CFR part 721 is available at http://www.access.gpo.gov/nara/cfr/cfrhtml_00/Title_40/40cfr721_00.html, a beta site currently under development.

2. *In person*. The Agency has established an official record for this action under docket control number OPPTS–50644A. The official record consists of the documents specifically referenced in this action, any public comments received during an applicable comment period, and other information related to this action, including any information claimed as Confidential Business Information (CBI). This official record includes the documents that are physically located in the docket, as well as the documents that are referenced in those documents. The public version of the official record does not include any information claimed as CBI. The public version of the official record, which includes printed, paper versions of any electronic comments submitted during

an applicable comment period, is available for inspection in the TSCA Nonconfidential Information Center, North East Mall Rm. B–607, Waterside Mall, 401 M St., SW., Washington, DC. The Center is open from noon to 4 p.m., Monday through Friday, excluding legal holidays. The telephone number for the Center is (202) 260–7099.

II. Background

A. What Action is the Agency Taking?

The Agency proposed the modification of these SNURs in the **Federal Register** of October 30, 2001 (66 FR 54742) (FRL–6798–7). The background and reasons for the modification of each individual SNUR are set forth in the preamble to the proposed SNUR modification. The comment period closed on November 29, 2001. EPA received no comments regarding these SNURS. Therefore, EPA is issuing the modified SNURs.

B. What is the Agency's Authority for Taking this Action?

TSCA section 5(a)(2) and 40 CFR part 721 authorize EPA to determine that a use of a chemical substance is a ''significant new use.'' EPA must make this determination by rule after considering all relevant factors, including those listed in section 5(a)(2) of TSCA. Once EPA promulgates a rule designating ''significant new uses'' for a given chemical substance, section 5(a)(1)(B) of TSCA requires persons to submit a notice to EPA at least 90 days before they manufacture, import, or process the substance for that use. The mechanism for reporting under this requirement is established under 40 CFR 721.5.

Section 5(a)(1) of TSCA (15 U.S.C. 2604(a)(1)) and its implementing regulations at 40 CFR parts 720 and 721 require that any person intending to manufacture a new chemical substance, or to manufacture or process any chemical substance for a significant new use, must give EPA 90-days advance written notice in the form of a pre-manufacture notice (PMN) or SNUN, respectively.

Upon reviewing those notices, if EPA makes certain determinations regarding potential exposures and risks that may be presented by the activities associated with the chemical, EPA may regulate the chemical by issuing an order under TSCA section 5(e) and/or a SNUR under TSCA section 5(a)(2) and 40 CFR part 721. The TSCA section 5(e) order governs only the entity who submitted the PMN, whereas the section 5(a)(2) SNUR applies to all manufacturers and processors of the same chemical.

EPA may respond to SNUNs by issuing or modifying a TSCA section 5(e) consent order and/or amending the SNUR promulgated under TSCA section 5(a)(2). Amendment of the SNUR will often be necessary to allow companies other than the SNUN submitter to engage in the newly authorized use(s), because even after a manufacturer submits a SNUN and the review period expires, processors of the same substance still must submit a SNUN before engaging in the significant new use. Provisions regarding EPA's authority to modify or revoke SNUR requirements appear at 40 CFR 721.185.

EPA responded to PMN P–95–1411 by issuing a TSCA section 5(e) consent order and TSCA section 5(a)(2) SNUR to address concerns for both human health and the environment. Based on data from a 90-subchronic oral toxicity study in rats, submitted pursuant to the terms of the 5(e) consent order, EPA however, no longer concludes that the PMN substance may present an unreasonable risk to human health. Therefore, EPA has revoked the section 5(e) consent order entirely and, pursuant to TSCA section5(a)(2) and 40 CFR 721.185, is amending the SNUR to remove the human health related notice requirements, leaving only the notification requirements related to environmental releases.

EPA responded to PMNs P–97–520/521 by issuing a TSCA section 5(e) consent order requiring certain testing based on expected substantial human and environmental exposures and promulgating a TSCA section 5(a)(2) SNUR to address concerns for human health. In response to SNUNs S–00–397/398 by the same manufacturer proposing new uses for the same chemicals, EPA modified the section 5(e) consent order to allow certain new uses, but with restrictions to mitigate potential risks to human health. Accordingly, pursuant to TSCA section 5(a)(2) and 40 CFR 721.185, EPA is hereby amending the corresponding SNURs to modify the significant new uses consistent with the terms of the modified section 5(e) consent order and to provide EPA an opportunity to assess the potential for significant changes in human or environmental exposure.

C. Applicability of General Provisions

General provisions for SNURs appear under subpart A of 40 CFR part 721. These provisions describe persons subject to the final rule, recordkeeping requirements, exemptions to reporting requirements, and applicability of the final rule to uses occurring before the effective date of the final rule. Provisions relating to user fees appear at 40 CFR part 700. Persons subject to this SNUR must comply with the same notice requirements and EPA regulatory procedures as submitters of PMNs under section 5(a)(1)(A) of TSCA. In particular, these requirements include the information submission requirements of TSCA section 5(b) and 5(d)(1), the exemptions authorized by TSCA section 5 (h)(1), (h)(2), (h)(3), and (h)(5), and the regulations at 40 CFR part 720. Once EPA receives a SNUR notice, EPA may take regulatory action under TSCA section 5(e), 5(f), 6, or 7 to control the activities on which it has received the SNUR notice. If EPA does not take action, EPA is required under TSCA section 5(g) to explain in the **Federal Register** its reasons for not taking action.

Persons who intend to export a substance identified in a proposed or final SNUR are subject to the export notification provisions of TSCA section 12(b). The regulations that interpret TSCA section 12(b) appear at 40 CFR part 707. Persons who intend to import a chemical substance identified in a final SNUR are subject to the TSCA section 13 import certification requirements, which are codified at 19 CFR 12.118 through 12.127 and 127.28. Such persons must certify that they are in compliance with SNUR requirements. The EPA policy in support of the import certification appears at 40 CFR part 707.

III. Regulatory Assessment Requirements

Under Executive Order 12866, entitled *Regulatory Planning and Review* (58 FR 51735, October 4, 1993), the Office of Management and Budget (OMB) has determined that proposed or final SNURs are not a ''significant regulatory action'' subject to review by OMB, because they do not meet the criteria in section 3(f) of the Executive Order.

Based on EPA's experience with proposing and finalizing SNURs, State, local, and tribal governments have not been impacted by these rulemakings, and EPA does not have any reasons to believe that any State, local, or tribal government will be impacted by this rulemaking. As such, EPA has determined that this regulatory action does not impose any enforceable duty, contain any unfunded mandate, or otherwise have any affect on small governments subject to the requirements of sections 202, 203, 204, or 205 of the Unfunded Mandates Reform Act of 1995 (UMRA) (Pub. L. 104–4).

This rule does not have tribal implications because it is not expected to have substantial direct effects on Indian Tribes. This rule does not

significantly or uniquely affect the communities of Indian tribal governments, nor does it involve or impose any requirements that affect Indian Tribes. Accordingly, the requirements of section 3(b) of Executive Order 13084, entitled *Consultation and Coordination with Indian Tribal Governments* (63 FR 276755, May 19, 1998), do not apply to this rule. Executive Order 13175, entitled *Consultation and Coordination with Indian Tribal Governments* (65 FR 67249, November 6, 2000), which took effect on January 6, 2001, revokes Executive Order 13084 as of that date. EPA developed this rulemaking, however, during the period when Executive Order 13084 was in effect; thus, EPA addressed tribal considerations under Executive Order 13084. For the same reasons stated for Executive Order 13084, the requirements of Executive Order 10175 do not apply to this rule either. Nor will this action have a substantial direct effect on States, on the relationship between the national government and the States, or on the distribution of power and responsibilities among the various levels of government, as specified in Executive Order 13132, entitled *Federalism* (64 FR 43255, August 10, 1999).

In issuing this rule, EPA has taken the necessary steps to eliminate drafting errors and ambiguity, minimize potential litigation, and provide a clear legal standard for affected conduct, as required by section 3 of Executive Order 12988, entitled *Civil Justice Reform* (61 FR 4729, February 7, 1996).

EPA has complied with Executive Order 12630, entitled *Governmental Actions and Interference with Constitutionally Protected Property Rights* (53 FR 8859, March 15, 1988), by examining the takings implications of this rule in accordance with the ''Attorney General's Supplemental Guidelines for the Evaluation of Risk and Avoidance of Unanticipated Takings'' issued under the Executive Order.

This action does not entail special considerations of environmental justice related issues as delineated by Executive Order 12898, entitled *Federal Actions to Address Environmental Justice in Minority Populations and Low-Income Populations* (59 FR 7629, February 16, 1994).

This action is not subject to Executive Order 13045, entitled *Protection of Children from Environmental Health Risks and Safety Risks* (62 FR 19885, April 23, 1997), because this is not an economically significant regulatory action as defined by Executive Order 12866, and this action does not address environmental health or safety risks disproportionately affecting children.

In addition, since this action does not involve any technical standards, section 12(d) of the National Technology Transfer and Advancement Act of 1995 (NTTAA) Pub. L. 104–113 section 12(d) (15 U.S.C. 272 note), does not apply to this action.

Pursuant to section 605(b) of the Regulatory Flexibility Act (RFA) (5 U.S.C. 601 *et seq.*), the Agency hereby certifies that promulgation of this SNUR will not have a significant adverse economic impact on a substantial number of small entities. The rationale supporting this conclusion is as follows. A SNUR applies to any person (including small or large entities) who intends to engage in any activity described in the rule as a ''significant new use.'' By definition of the word ''new,'' and based on all information currently available to EPA, it appears that no small or large entities presently engage in such activity. Since a SNUR only requires that any person who intends to engage in such activity in the future must first notify EPA by submitting a SNUN, no economic impact will even occur until someone decides to engage in those activities. Although some small entities may decide to conduct such activities in the future, EPA cannot presently determine how many, if any, there may be. However, EPA's experience to date is that, in response to the promulgation of over 900 SNURs, the Agency has received fewer than 25 SNUNs. Of those SNUNs submitted, none appear to be from small entities in response to any SNUR. In addition, the estimated reporting cost for submission of a SNUN is minimal regardless of the size of the firm. Therefore, EPA believes that the potential economic impact of complying with this SNUR are not expected to be significant or adversely impact a substantial number of small entities. In a SNUR that published on June 2, 1997 (62 FR 29684) (FRL–5597–1), the Agency presented it's general determination that proposed and final SNURs are not expected to have a significant economic impact on a substantial number of small entities, which was provided to the Chief Counsel for Advocacy of the Small Business Administration.

According to the Paperwork Reduction Act (PRA), 44 U.S.C. 3501 *et seq.*, an Agency may not conduct or sponsor, and a person is not required to respond to a collection of information that requires OMB approval under the PRA, unless it has been approved by OMB and displays a currently valid OMB control number. The OMB control numbers for EPA's regulations, after initial display in the preamble of the final rule and in addition to its display on any related collection instrument, are listed in 40 CFR part 9.

The information collection requirements related to this action have already been approved by OMB pursuant to the PRA under OMB control number 2070–0012 (EPA ICR No. 574). This action does not impose any burden requiring additional OMB approval. If an entity were to submit a SNUN to the Agency, the annual burden is estimated to average between 30 and 170 hours per response. This burden estimate includes the time needed to review instructions, search existing data sources, gather and maintain the data needed, and complete, review, and submit the required SNUN.

Send any comments about the accuracy of the burden estimate, and any suggested methods for minimizing respondent burden, including through the use of automated collection techniques, to the Director, OP Regulatory Information Division (2137), Environmental Protection Agency, 1200 Pennsylvania Ave., NW., Washington, DC 20460. Please remember to include the OMB control number in any correspondence, but do not submit any completed forms to this address.

This rule is not subject to Executive Order 13211, ''*Actions Concerning Regulations That Significantly Affect Energy Supply, Distribution, or Use*'' (66 FR 28355, May 22, 2001) because it is not a significant regulatory action under Executive Order 12866.

IV. Submission to Congress and the Comptroller General

The Congressional Review Act, 5 U.S.C. 801 *et seq.*, as added by the Small Business Regulatory Enforcement Fairness Act of 1996, generally provides that before a rule may take effect, the Agency promulgating the rule must submit a rule report, which includes a copy of the rule, to each House of the Congress and to the Comptroller General of the United States. EPA will submit a report containing this rule and other required information to the U.S. Senate, the U.S. House of Representatives, and the Comptroller General of the United States prior to publication of the rule in the **Federal Register**. This rule is not a ''major rule'' as defined by 5 U.S.C. 804(2).

List of Subjects in 40 CFR Part 721

Environmental protection, Chemicals, Hazardous substances, Reporting and recordkeeping requirements.

Dated: March 1, 2002.

William H. Sanders, III

Office Director, Office of Pollution Prevention and Toxics.

Therefore, 40 CFR part 721 is amended as follows:

PART 721—[AMENDED]

1. The authority citation for part 721 continues to read as follows:

Authority: 15 U.S.C. 2604, 2607, and 2625(c).

2. Section 721.4589 is amended as follows:

a. By revising the section heading.

b. By revising paragraphs (a)(1), (a)(2)(i), and (b)(1).

c. By removing and reserving paragraph (a)(2)(ii).

d. By removing paragraphs (a)(2)(iii), (a)(2)(iv), and (b)(3).

§ 721.4589 Propanedioic acid, [(4-methoxyphenyl)methylene]-, bis(1,2,2,6,6-pentamethyl-4-piperdinyl) ester (9CI).

(a) * * * (1) The chemical substance identified as propanedioic acid, [(4-methoxyphenyl)methylene]-, bis(1,2,2,6,6-pentamethyl-4-piperdinyl) ester (9CI) (PMN P–95–1411; CAS No. 147783–69–5) is subject to reporting under this section for the significant new uses described in paragraph (a)(2) of this section.

(2) * * *

(i) *Release to water*. Requirements as specified in § 721.90 (a)(1), (b)(1), and (c)(1).

(ii) [Reserved]

(b) * * *

(1) *Recordkeeping*. Recordkeeping requirements as specified in § 721.125 (a), (b), (c), and (k) are applicable to manufacturers, importers, and processors of this substance.

* * * * *

3. Section 721.6175 is amended as follows:

a. By revising the section heading.

b. By revising paragraphs (a)(1), (a)(2)(i), and (b)(1).

c. By adding paragraphs (a)(2)(ii), (a)(2)(iii), and (b)(3).

§ 721.6175 2-Piperdinone, 1,3-dimethyl-,.

(a) * * * (1) The chemical substance identified as 2-Piperdinone, 1,3-dimethyl-, (PMN P–97–520 and SNUN 00–397; CAS No. 1690–76–2) is subject to reporting under this section for the significant new uses described in paragraph (a)(2) of this section.

(2) * * *

(i) *Protection in the workplace*. Requirements as specified in § 721.63 (a)(1), (a)(2)(i), (a)(3), (b) (concentration set at 1.0 percent), and (c).

(ii) *Hazard communication program*. Requirements as specified in § 721.72 (a), (b), (c), (d), (e) (concentration set at 1.0 percent), (f), (g)(1)(i), (g)(1)(iii), (g)(1)(iv), (g)(1)(ix), (g)(2)(i), (g)(2)(v), and (g)(5).

(iii) *Industrial, commercial, and consumer activities*. Requirements as specified in § 721.80(k) (use or processing other than: in enclosed systems (such as hydrocarbon extraction, polymer synthesis, wire enamel resin); electronic industry cleaning solvent; and other precision industry cleaning (such as automobile manufacturing, aerospace, and optics)), (o), and (q).

(b) * * *

(1) *Recordkeeping*. The recordkeeping requirements specified in § 721.125 (a), (b), (c), (d), (e), (f), (g), (h), and (i) are applicable to manufacturers, importers, and processors of this substance.

* * * * *

(3) *Determining whether a specific use is subject to this section*. The provisions of § 721.1725(b)(1) apply to this substance.

4. Section 721.6176 is amended as follows:

a. By revising the section heading.

b. By revising paragraphs (a)(1), (a)(2)(i), and (b)(1).

c. By adding paragraphs (a)(2)(ii), (a)(2)(iii), and (b)(3).

§ 721.6176 2-Piperdinone, 1,5-dimethyl-,.

(a) * * * (1) The chemical substance identified as 2-Piperdinone, 1,5-dimethyl-, (PMN P–97–521 and SNUN 00–398; CAS No. 86917–58–0) is subject to reporting under this section for the significant new uses described in paragraph (a)(2) of this section.

(2) * * *

(i) *Protection in the workplace*. Requirements as specified in § 721.63 (a)(1), (a)(2)(i), (a)(3), (b) (concentration set at 1.0 percent), and (c).

(ii) *Hazard communication program*. Requirements as specified in § 721.72 (a), (b), (c), (d), (e) (concentration set at 1.0 percent), (f), (g)(1)(i), (g)(1)(iii), (g)(1)(iv), (g)(1)(ix), (g)(2)(i), (g)(2)(v), and (g)(5).

(iii) *Industrial, commercial, and consumer activities*. Requirements as specified in § 721.80(k) (use or processing other than: in enclosed systems (such as hydrocarbon extraction, polymer synthesis, wire enamel resin); electronic industry cleaning solvent; and other precision industry cleaning (such as automobile manufacturing, aerospace, and optics)), (o), and (q).

(b) * * *

(1) *Recordkeeping*. The recordkeeping requirements specified in § 721.125 (a), (b), (c), (d), (e), (f), (g), (h), and (i) are applicable to manufacturers, importers, and processors of this substance.

* * * * *

(3) *Determining whether a specific use is subject to this section*. The provisions of § 721.1725(b)(1) apply to this substance.

[FR Doc. 02–6726 Filed 3–19–02; 8:45 am]

BILLING CODE 6560–50–S

ENVIRONMENTAL PROTECTION AGENCY

40 CFR Part 721

[OPPTS–50642A; FRL–6819–5]

RIN 2070–AB27

Modification of Significant New Uses of Certain Chemical Substances

AGENCY: Environmental Protection Agency (EPA).

ACTION: Final rule.

SUMMARY: Under section 5(a)(2) of the Toxic Substances Control Act (TSCA) and 40 CFR 721.185, EPA is amending two significant new use rules (SNURs) to allow certain uses without requiring a significant new use notice (SNUN). EPA is amending these rules based on review of new toxicity and exposure data. The amended SNURs would continue to require a SNUN for new uses that may involve significant changes in human or environmental exposure

DATES: This final rule is effective on May 20, 2002.

FOR FURTHER INFORMATION CONTACT: *For general information contact*: Barbara Cunningham, Acting Director, Environmental Assistance Division (7408M), Office of Pollution Prevention and Toxics, Environmental Protection Agency, 1200 Pennsylvania Ave., NW., Washington, DC 20460; telephone number: (202) 554–1404; e-mail address: TSCA-Hotline@epa.gov.

For technical information contact: James Alwood, Chemical Control Division (7405M), Office of Pollution Prevention and Toxics, Environmental Protection Agency, 1200 Pennsylvania Ave., NW., Washington, DC 20460; telephone number: (202) 564–8974; e-mail address: alwood.jim@epa.gov.

SUPPLEMENTARY INFORMATION:

I. General Information

A. Does this Action Apply to Me?

You may be potentially affected by this action if you manufacture, import, process, or use the chemical substances contained in this rule. Potentially

affected categories and entities may include, but are not limited to:

Categories	NAICS codes	Examples of potentially affected entities
Chemical manufacturers	325	Manufacturers, importers, processors, and users of chemicals
Petroleum and coal product industries	324	Manufacturers, importers, processors, and users of chemicals

This listing is not intended to be exhaustive, but rather provides a guide for readers regarding entities likely to be affected by this action. Other types of entities not listed in the table in this unit could also be affected. The North American Industrial Classification System (NAICS) codes have been provided to assist you and others in determining whether or not this action applies to certain entities. To determine whether you or your business is affected by this action, you should carefully examine the applicability provisions in title 40 of the Code of Federal Regulations (CFR) at 40 CFR 721.5. If you have any questions regarding the applicability of this action to a particular entity, consult the technical person listed under **FOR FURTHER INFORMATION CONTACT**.

B. How Can I Get Additional Information, Including Copies of this Document or Other Related Documents?

1. *Electronically*. You may obtain electronic copies of this document, and certain other related documents that might be available electronically, from the EPA Internet Home Page at http://www.epa.gov/. To access this document, on the Home Page select ''Laws and Regulations,'' ''Regulations and Proposed Rules,'' and then look up the entry for this document under the ''**Federal Register**—Environmental Documents.'' You can also go directly to the **Federal Register** listings at http://www.epa.gov/fedrgstr/. A frequently updated electronic version of 40 CFR part 721 is available at http://www.access.gpo.gov/nara/cfr/cfrhtml_00/Title_40/40cfr721_00.html, a beta site currently under development.

2. *In person*. The Agency has established an official record for this action under docket control number OPPTS–50642A. The official record consists of the documents specifically referenced in this action, any public comments received during an applicable comment period, and other information related to this action, including any information claimed as Confidential Business Information (CBI). This official record includes the documents that are physically located in the docket, as well as the documents that are referenced in those documents. The public version of the official record does not include any information claimed as CBI. The public version of the official record, which includes printed, paper versions of any electronic comments submitted during an applicable comment period, is available for inspection in the TSCA Nonconfidential Information Center, North East Mall Rm. B–607, Waterside Mall, 401 M St., SW., Washington, DC. The Center is open from noon to 4 p.m., Monday through Friday, excluding legal holidays. The telephone number for the Center is (202) 260–7099.

II. Background

A. What Action is the Agency Taking?

The Agency proposed the modification of these SNURs in the **Federal Register** of August 16, 2001 (66 FR 42978) (FRL–6557–8). The background and reasons for the modification of each individual SNUR are set forth in the preamble to the proposed SNUR modification. The comment period closed on September 17, 2001. EPA received no comments regarding the SNUR for P–89–769 codified at 721.9480. Therefore EPA is issuing the modified SNUR.

EPA received one comment from the PMN submitter of P–95–4, who provided particle size data that was the basis for the proposed elimination of reporting requirements for respiratory protection when the particle size of the PMN substance is 250 microns or greater. The commenter stated that when the particle size of the substance is 250 microns or greater, exposed workers are not reasonably likely to be exposed to significant amounts of the PMN substance and that SNUR reporting provisions should not apply. EPA reviewed the available dermal toxicity data and determined that when the particle size of the substance is 250 microns or greater dermal exposures would not result in significant changes in human exposure. This determination was based on the fact that the dermal LD_{50} of the substance is greater than 2,000 milligram/kilogram (mg/kg), the skin irritation study in rabbits for the substance showed no skin irritation and had a Draize irritation score of 0, indicative of a compound with no irritation potential to the skin, the skin sensitization study for the substance showed no reactions, and no dermal absorption of particles greater than 250 microns is expected. Therefore, EPA is issuing a modified final SNUR where no SNUR reporting requirements apply when the particle size of the substance is greater than 250 microns.

B. What is the Agency's Authority for Taking this Action?

Section 5(a)(2) of TSCA (15 U.S.C. 2604(a)(2)) authorizes EPA to determine that a use of a chemical substance is a significant new use. EPA must make this determination by rule after considering all relevant factors, including those listed in section 5(a)(2) of TSCA. Once EPA determines that a use of a chemical substance is a significant new use, section 5(a)(1)(B) of TSCA requires persons to submit a notice to EPA at least 90 days before they manufacture, import, or process the substance for that use. The mechanism for reporting under this requirement is established under 40 CFR 721.5.

During review of the PMNs submitted for the chemical substances that are the subject of this rule, EPA concluded that regulation was warranted based on available information that indicated activities not described in the TSCA section 5(e) consent order might result in significant changes in human or environmental exposure as described in section 5(a)(2) of TSCA. Based on these findings, SNURs were promulgated.

EPA has revoked the TSCA section 5(e) consent order for P–89–769 and has determined that modifying these SNURs would not result in significant changes in human or environmental exposure. The modification of SNUR provisions for these substances designated herein is consistent with the provisions of the TSCA section 5(e) consent order.

C. Applicability of General Provisions

General provisions for SNURs appear under subpart A of 40 CFR part 721. These provisions describe persons subject to the rule, recordkeeping requirements, exemptions to reporting requirements, and applicability of the rule to uses occurring before the effective date of the final rule. Provisions relating to user fees appear at 40 CFR part 700. Persons subject to this SNUR must comply with the same notice requirements and EPA regulatory procedures as submitters of PMNs under section 5(a)(1)(A) of TSCA. In particular, these requirements include the information submission requirements of TSCA section 5(b) and 5(d)(1), the exemptions authorized by TSCA section 5 (h)(1), (h)(2), (h)(3), and (h)(5), and the regulations at 40 CFR part 720. Once EPA receives a SNUR notice, EPA may take regulatory action under TSCA section 5(e), 5(f), 6, or 7 to control the

activities on which it has received the SNUR notice. If EPA does not take action, EPA is required under TSCA section 5(g) to explain in the **Federal Register** its reasons for not taking action.

Persons who intend to export a substance identified in a proposed or final SNUR are subject to the export notification provisions of TSCA section 12(b). The regulations that interpret TSCA section 12(b) appear at 40 CFR part 707. Persons who intend to import a chemical substance identified in a final SNUR are subject to the TSCA section 13 import certification requirements, which are codified at 19 CFR 12.118 through 12.127 and 127.28. Such persons must certify that they are in compliance with SNUR requirements. The EPA policy in support of the import certification appears at 40 CFR part 707.

III. Regulatory Assessment Requirements

Under Executive Order 12866, entitled *Regulatory Planning and Review* (58 FR 51735, October 4, 1993), the Office of Management and Budget (OMB) has determined that proposed or final SNURs are not a ''significant regulatory action'' subject to review by OMB, because they do not meet the criteria in section 3(f) of the Executive Order.

Based on EPA's experience with proposing and finalizing SNURs, State, local, and tribal governments have not been impacted by these rulemakings, and EPA does not have any reasons to believe that any State, local, or tribal government will be impacted by this rulemaking. As such, EPA has determined that this regulatory action does not impose any enforceable duty, contain any unfunded mandate, or otherwise have any affect on small governments subject to the requirements of sections 202, 203, 204, or 205 of the Unfunded Mandates Reform Act of 1995 (UMRA) (Public Law 104–4).

This rule does not have tribal implications because it is not expected to have substantial direct effects on Indian Tribes. This rule does not significantly or uniquely affect the communities of Indian tribal governments, nor does it involve or impose any requirements that affect Indian Tribes. Accordingly, the requirements of Executive Order 13175, entitled *Consultation and Coordination with Indian Tribal Governments* (65 FR 67249, November 6, 2000), which took effect on January 6, 2001 do not apply to this rule. Nor will this action have a substantial direct effect on States, on the relationship between the national government and the States, or on the distribution of power and responsibilities among the various levels of government, as specified in Executive Order 13132, entitled *Federalism* (64 FR 43255, August 10, 1999).

In issuing this rule, EPA has taken the necessary steps to eliminate drafting errors and ambiguity, minimize potential litigation, and provide a clear legal standard for affected conduct, as required by section 3 of Executive Order 12988, entitled *Civil Justice Reform* (61 FR 4729, February 7, 1996).

EPA has complied with Executive Order 12630, entitled *Governmental Actions and Interference with Constitutionally Protected Property Rights* (53 FR 8859, March 15, 1988), by examining the takings implications of this rule in accordance with the ''Attorney General's Supplemental Guidelines for the Evaluation of Risk and Avoidance of Unanticipated Takings'' issued under the Executive Order.

This action does not entail special considerations of environmental justice related issues as delineated by Executive Order 12898, entitled *Federal Actions to Address Environmental Justice in Minority Populations and Low-Income Populations* (59 FR 7629, February 16, 1994).

This action is not subject to Executive Order 13045, entitled *Protection of Children from Environmental Health Risks and Safety Risks* (62 FR 19885, April 23, 1997), because this is not an economically significant regulatory action as defined by Executive Order 12866, and this action does not address environmental health or safety risks disproportionately affecting children.

In addition, since this action does not involve any technical standards, section 12(d) of the National Technology Transfer and Advancement Act of 1995 (NTTAA), Public Law 104–113, section 12(d) (15 U.S.C. 272 note), does not apply to this action.

Pursuant to section 605(b) of the Regulatory Flexibility Act (RFA) (5 U.S.C. 601 *et seq.*), the Agency hereby certifies that promulgation of this SNUR will not have a significant adverse economic impact on a substantial number of small entities. The rationale supporting this conclusion is as follows. A SNUR applies to any person (including small or large entities) who intends to engage in any activity described in the rule as a ''significant new use.'' By definition of the word ''new,'' and based on all information currently available to EPA, it appears that no small or large entities presently engage in such activity. Since a SNUR only requires that any person who intends to engage in such activity in the future must first notify EPA by submitting a SNUN, no economic impact will even occur until someone decides to engage in those activities. Although some small entities may decide to conduct such activities in the future, EPA cannot presently determine how many, if any, there may be. However, EPA's experience to date is that, in response to the promulgation of over 530 SNURs, the Agency has received fewer than 15 SNUNs. Of those SNUNs submitted, none appear to be from small entities in response to any SNUR. In addition, the estimated reporting cost for submission of a SNUN are minimal regardless of the size of the firm. Therefore, EPA believes that the potential economic impact of complying with this SNUR are not expected to be significant or adversely impact a substantial number of small entities. In a SNUR that published on June 2, 1997 (62 FR 29684) (FRL–5597–1), the Agency presented it's general determination that proposed and final SNURs are not expected to have a significant economic impact on a substantial number of small entities, which was provided to the Chief Counsel for Advocacy of the Small Business Administration.

According to the Paperwork Reduction Act (PRA), 44 U.S.C. 3501 *et seq.*, an Agency may not conduct or sponsor, and a person is not required to respond to a collection of information that requires OMB approval under the PRA, unless it has been approved by OMB and displays a currently valid OMB control number. The OMB control numbers for EPA's regulations, after initial display in the preamble of the final rule and in addition to its display on any related collection instrument, are listed in 40 CFR part 9.

The information collection requirements related to this action have already been approved by OMB pursuant to the PRA under OMB control number 2070–0012 (EPA ICR No. 574). This action does not impose any burden requiring additional OMB approval. If an entity were to submit a significant new use notice to the Agency, the annual burden is estimated to average between 30 and 170 hours per response. This burden estimate includes the time needed to review instructions, search existing data sources, gather and maintain the data needed, and complete, review and submit the required SNUN.

Send any comments about the accuracy of the burden estimate, and any suggested methods for minimizing respondent burden, including through the use of automated collection

techniques, to the Director, OP Regulatory Information Division (2137), Environmental Protection Agency, 1200 Pennsylvania Ave., NW., Washington, DC 20460. Please remember to include the OMB control number in any correspondence, but do not submit any completed forms to this address.

This rule is not subject to Executive Order 13211, ''*Actions Concerning Regulations That Significantly Affect Energy Supply, Distribution, or Use''* (66 FR 28355, May 22, 2001) because it is not a significant regulatory action under Executive Order 12866.

IV. Submission to Congress and the Comptroller General

The Congressional Review Act, 5 U.S.C. 801 *et seq.*, as added by the Small Business Regulatory Enforcement Fairness Act of 1996, generally provides that before a rule may take effect, the Agency promulgating the rule must submit a rule report, which includes a copy of the rule, to each House of the Congress and the Comptroller General of the United States. EPA will submit a report containing this rule and other required information to the U.S. Senate, the U.S. House of Representatives, and the Comptroller General of the United States prior to publication of the rule in the **Federal Register**. This rule is a ''major rule'' as defined by 5 U.S.C. 804(2).

List of Subjects in 40 CFR Part 721

Environmental protection, Chemicals, Hazardous substances, Reporting and recordkeeping requirements.

Dated: March 1, 2002.

William H. Sanders, III

Office Director, Office of Pollution Prevention and Toxics.

Therefore, 40 CFR part 721 is amended as follows:

PART 721—[AMENDED]

1. The authority citation for part 721 continues to read as follows:

Authority: 15 U.S.C. 2604, 2607, and 2625(c).

2. Section 721.1925 is amended as follows:

a. By revising the section heading.

b. By revising paragraphs (a)(1) and (a)(2)(iii).

c. By removing paragraph (b)(3).

§ 721.1925 Substituted carboheterocyclic butane tetracarboxylate (generic).

(a) * * * (1) The chemical substance identified generically as substituted carboheterocyclic butane tetracarboxylate (PMNs P–90–440 and P–95–4) is subject to reporting under this section for the significant new uses described in paragraph (a)(2) of this section. The requirements of this section do not apply when particle sizes of the chemical substance is greater than 250 microns.

(2) * * *

* * * * *

(iii) *Industrial, commercial, and consumer activities.* Requirements as specified in § 721.80(f).

* * * * *

3. Section 721.9480 is amended as follows:

a. By revising the section heading.

b. By revising paragraphs (a)(1), (a)(2)(i), and (b)(1).

c. By removing and reserving paragraph (a)(2)(ii).

d. By removing paragraphs (a)(2)(iii), (a)(2)(iv), (a)(2)(v), and (b)(3).

§ 721.9480 Resorcinol, formaldehyde substituted carbomonocycle resin (generic).

(a) * * * (1) The chemical substance identified generically as resorcinol, formaldehyde substituted carbomonocycle resin (PMN P–89–769) is subject to reporting under this section for the significant new uses described in paragraph (a)(2) of this section.

(2) * * *

(i) *Release to water.* Requirements as specified in § 721.90 (a)(1), (b)(1), and (c)(1).

(ii) [Reserved]

(b) * * *

(1) *Recordkeeping.* Recordkeeping requirements as specified in § 721.125 (a), (b), (c), and (k) are applicable to manufacturers, importers, and processors of this substance.

* * * * *

[FR Doc. 02–6725 Filed 3–19–02; 8:45 am]

BILLING CODE 6560–50–S

DEPARTMENT OF THE INTERIOR

Office of the Secretary

43 CFR Part 35

RIN 1090–AA80

Change of Address for Office of Hearings and Appeals; Correction

AGENCY: Office of the Secretary, Interior.

ACTION: Final rule; correction.

SUMMARY: In the January 30, 2002, **Federal Register**, the Department of the Interior published a revision to its regulations governing administrative appeals to reflect a change of address for the Office of Hearings and Appeals (OHA). One of the sections for revision was erroneously cited. This document corrects that citation.

DATES: Effective on March 20, 2002.

FOR FURTHER INFORMATION CONTACT: Charles E. Breece, Principal Deputy Director, Office of Hearings and Appeals, 801 North Quincy Street, Arlington, Virginia 22203, telephone 702–235–3810.

SUPPLEMENTARY INFORMATION: The Department of the Interior published a final rule in the **Federal Register** of January 30, 2002, revising several parts of 43 CFR to reflect a change of address for OHA. 67 FR 4367. One of the sections for revision was erroneously cited as 43 CFR 35.1(g). There is no paragraph (g) in § 35.1. The correct citation is 43 CFR 35.2(g).

In rule FR Doc. 02–2188 published on January 30, 2002 (67 FR 4367), make the following correction: On page 4369, in the first column, change the section heading and instruction 25 to read as follows:

§ 35.2 [Amended]

25. In § 35.2(g), revise ''4015 Wilson Boulevard'' to read ''801 North Quincy Street''.

Dated: March 11, 2002.

P. Lynn Scarlett,

Assistant Secretary—Policy, Management and Budget.

[FR Doc. 02–6658 Filed 3–19–02; 8:45 am]

BILLING CODE 4310–RK–M

DEPARTMENT OF COMMERCE

National Oceanic and Atmospheric Administration

50 CFR Part 300

[Docket No. 020131023–2056–02; I.D. 030702B]

RIN 0648–AP80

Pacific Halibut Fisheries; Catch Sharing Plans

AGENCY: National Marine Fisheries Service (NMFS), National Oceanic and Atmospheric Administration (NOAA), Commerce.

ACTION: Temporary final rule; annual management measures for Pacific halibut fisheries and approval of catch sharing plans.

SUMMARY: The Assistant Administrator for Fisheries, NOAA (AA), on behalf of the International Pacific Halibut Commission (IPHC), publishes annual management measures, promulgated as regulations by the IPHC and approved by the Secretary of State, governing the

Pacific halibut fishery. The AA also announces the approval of modifications to the Catch Sharing Plan (CSP) for Area 2A and implementing regulations for 2002. These actions are intended to enhance the conservation of Pacific halibut and further the goals and objectives of the Pacific Fishery Management Council (PFMC) and the North Pacific Fishery Management Council (NPFMC).

DATES: Effective March 18, 2002, through the **Federal Register** publication of the 2003 specification management measures.

ADDRESSES: NMFS Alaska Region, 709 West 9th St., P.O. Box 21668, Juneau, AK 99802–1668 (http://www.fakr.noaa.gov); or NMFS Northwest Region, 7600 Sand Point Way NE, Seattle, WA 98115–0070 (http://www.nwr.noaa.gov).

FOR FURTHER INFORMATION CONTACT: Jay Ginter, 907–586–7228 or Yvonne deReynier, 206–526–6140.

SUPPLEMENTARY INFORMATION:

Background

The IPHC has promulgated regulations governing the Pacific halibut fishery in 2002, under the Convention between the United States and Canada for the Preservation of the Halibut Fishery of the North Pacific Ocean and Bering Sea (Convention), signed at Ottawa, Ontario, on March 2, 1953, as amended by a Protocol Amending the Convention (signed at Washington, D.C., on March 29, 1979). The IPHC regulations have been approved by the Secretary of State of the United States under section 4 of the Northern Pacific Halibut Act (Halibut Act, 16 U.S.C. 773–773k). Pursuant to regulations at 50 CFR 300.62, the approved IPHC regulations setting forth the 2002 IPHC annual management measures are published in the **Federal Register** to provide notice of their effectiveness, and to inform persons subject to the regulations of the restrictions and requirements for harvesting Pacific halibut.

The IPHC held its annual meeting in Seattle, WA, on January 22–25, 2002, and adopted regulations for 2002. The substantive changes to the previous IPHC regulations (66 FR 15801, March 21, 2001) include:

1. New catch limits for all areas;
2. Opening dates for the Area 2A commercial directed halibut fishery;
3. Specification of which commercial fishing regulations apply to the commercial treaty Indian fishery in Area 2A–1;
4. Revision of the definition of illegal possession of halibut such that a person is not required to know that they are in contravention of the IPHC regulations to be in illegal possession of halibut;
5. Allowance of fishing vessels carrying crab pots and operating off Alaska to have halibut heads, skins, bones and entrails on board provided they have documentation of legally acquiring the halibut body parts;
6. Recognition of the customary and traditional use of halibut (i.e. subsistence halibut) in Alaska; and
7. Removal of the expiration date of regulations allowing fishermen using Community Development Quota (CDQ) in Area 4E to retain halibut for personal use that are shorter than the minimum commercial size limit and also extension of this allowance to Area 4D CDQ fishermen.

In addition, this action implements the CSP for regulatory Area 2A. The CSP was developed by the PFMC under authority of the Halibut Act. Section 5 of the Halibut Act (16 U.S.C. 773c) provides the Secretary of Commerce (Secretary) with general responsibility to carry out the Convention and to adopt such regulations as may be necessary to implement the purposes and objectives of the Convention and the Halibut Act. The Secretary's authority has been delegated to the AA. Section 5 of the Halibut Act (16 U.S.C. 773c(c)) also authorizes the Regional Fishery Management Council having authority for the geographic area concerned to develop regulations governing the Pacific halibut catch in United States Convention waters that are in addition to, but not in conflict with, regulations of the IPHC. Pursuant to this authority, NMFS requested the PFMC to allocate halibut catches should such allocation be necessary.

Catch Sharing Plan for Area 2A

The PFMC's Area 2A CSP allocates the halibut catch limit for Area 2A among treaty Indian, non-Indian commercial, and non-Indian sport fisheries in and off Washington, Oregon, and California. Under the CSP, 35 percent of the Area 2A total allowable catch (TAC) is allocated to Washington treaty Indian tribes in Subarea 2A–1, and 65 percent is allocated to non-treaty fisheries in Area 2A. Treaty fisheries are divided into commercial fisheries, and ceremonial and subsistence fisheries. The allocation to non-treaty fisheries is divided into three shares, with the Washington sport fishery (north of the Columbia River) receiving 36.6 percent, the Oregon/California sport fishery receiving 31.7 percent, and the commercial fishery receiving 31.7 percent. The non-treaty commercial allocation is further divided between a directed longline fishery (85 percent) and an incidental catch allowance in the salmon troll fishery (15 percent). The directed commercial fishery in Area 2A is confined to southern Washington (south of 46°53′18'' N. lat.), Oregon and California. North of Point Chehalis, WA (46°53′18'' N. lat.) halibut may be retained by longline vessels participating in the limited entry, primary sablefish fishery. Under applicable regulations, incidental halibut retention in the primary sablefish fishery is only allowable when the overall Area 2A TAC is above 900,000 lb (408.2 mt,) which it is in 2002. The CSP also divides the sport fisheries into seven geographic areas, each with separate allocations, seasons, and bag limits.

For 2002, PFMC recommended changes to the CSP to modify the Pacific halibut sport fisheries in Area 2A in 2002 and beyond pursuant to recommendations from the Washington Department of Fish and Wildlife and the Oregon Department of Fish and Wildlife. These changes to the CSP will separate the Puget Sound sub-area of the Washington State sport fisheries into two regions with two separate season start dates and will allow Oregon anglers to retain up to two halibut on land.

A complete description of the PFMC recommended changes to the CSP, notice of a draft Environmental Assessment and Regulatory Impact Review (EA/RIR), and proposed sport fishery management measures were published in the **Federal Register** on February 11, 2002 (67 FR 6220) with a request for public comments by February 22, 2002. No public comments were received. Therefore, NMFS has approved the changes to the CSP as proposed, made a finding of no significant impact, and finalized the EA/RIR. Copies of the complete CSP for Area 2A as modified and the final EA/RIR are available from the NMFS Northwest Regional Office (see **ADDRESSES**).

In accordance with the CSP, the Washington Department of Fish and Wildlife (WDFW) and the Oregon Department of Fish and Wildlife (ODFW) held public workshops (after the IPHC set the Area 2A quota) in early February 2002, to develop recommendations on the opening dates and weekly structure of the sport fisheries. The WDFW and ODFW sent letters to NMFS discussing the outcome of the workshops and provided the following recommendations on the opening dates and season structure for the sport fisheries.

WDFW recommended a May 9 to July 12 season for eastern Puget Sound and

a May 23 to July 27 season for western Puget Sound, 5 days per week (closed Tuesday and Wednesday). The recommended number of fishing days is based on an analysis of past harvest patterns in this fishery and meets the requirements of the CSP for the overall Puget Sound sport fishery subarea. For the Washington North Coast subarea, WDFW has recommended a season opening May 1 and continuing until the May-June sub-quota is taken, 5 days per week (closed Sunday and Monday), and a second season for July 1–4, with a possibility of re-opening this subarea if sufficient quota remains after July 4. WDFW also recommended extending the southern boundary of the North Coast subarea's closed area by four miles, in accordance with paragraph (f)(1)(ii) of the CSP. This modest increase in the size of the closed area is intended to lengthen the fishing season by reducing access to an area of higher halibut abundance, known as a halibut ''hot spot.'' For the Washington South Coast subarea, WDFW has recommended a season opening May 1 and continuing until the quota is taken, 5 days per week (closed Friday and Saturday) in the offshore area and 7 days per week in the nearshore area. WDFW recommendations for both the North Coast and South Coast Washington subareas meet the requirements of the CSP.

Both WDFW and ODFW have recommended opening the Columbia River subarea on May 1 and continuing the season until the quota has been reached, 7 days per week. This recommended season meets the requirements of the CSP.

ODFW recommended starting the nearshore fishery in the Oregon Central Coast and South Coast subareas on May 1 and continuing the season until the sub-quota for that fishery is taken, 7 days per week. For the all-depth fisheries in those subareas, ODFW recommended a 4–day season of May 10, 11, 17, and 18, based on an analysis of past harvest rates, which indicated an increasing annual trend in this sport fishery. ODFW further recommended a 2 day August all-depth season of August 2 and 3. If the May season does not take the entire May sub-quota for these subareas, ODFW recommended these additional potential opening dates: June 7, 8, 21, 22. If the August season does not take the entire August sub-quota for these subareas, ODFW recommended these additional potential opening dates: August 23, 24, September 20, 21. These recommendations meet the requirements of the CSP for these subareas.

For the southernmost subarea, south of Humbug Mountain, Oregon, ODFW recommended opening this subarea on May 1 and continuing the season until the quota has been reached, 7 days per week. This recommended season meets the requirements of the CSP.

NMFS has implemented sport fishing management measures in Area 2A based on recommendations from the states in accordance with the CSP.

Annual Halibut Management Measures

The annual management measures that follow for the 2002 Pacific halibut fishery are identical to those recommended by the IPHC and approved by the Secretary of State.

2002 Pacific Halibut Fishery Regulations

Regulations Respecting the Convention Between Canada and the United States of America for the Preservation of the Halibut Fishery of the Northern Pacific Ocean and Bering Sea

1. Short Title

These regulations may be cited as the Pacific Halibut Fishery Regulations.

2. Application

(1) These Regulations apply to persons and vessels fishing for halibut in, or possessing halibut taken from the maritime area as defined in Section 3.

(2) Sections 3 to 6 apply generally to all halibut fishing.

(3) Sections 7 to 21 apply to commercial fishing for halibut.

(4) Section 22 applies to the United States treaty Indian fishery in subarea 2A–1.

(5) Section 23 applies to customary and traditional fishing in Alaska.

(6) Section 24 applies to sport fishing for halibut.

(7) These Regulations do not apply to fishing operations authorized or conducted by the Commission for research purposes.

3. Interpretation

(1) In these Regulations,

(a) *Authorized officer* means any State, Federal, or Provincial officer authorized to enforce these regulations including, but not limited to, the National Marine Fisheries Service (NMFS), Canada's Department of Fisheries and Oceans (DFO), Alaska Division of Fish and Wildlife Protection (ADFWP), United States Coast Guard (USCG), Washington Department of Fish and Wildlife (WDFW), and the Oregon State Police (OSP);

(b) *Authorized clearance personnel* means an authorized officer of the United States, a representative of the Commission, or a designated fish processor;

(c) *Charter vessel* means a vessel used for hire in sport fishing for halibut, but not including a vessel without a hired operator;

(d) *Commercial fishing* means fishing, other than treaty Indian ceremonial and subsistence fishing as referred to in section 22, and customary and traditional fishing as referred to in section 23 and defined by and regulated pursuant to National Marine Fisheries Service regulations published at 50 CFR part 300, the resulting catch of which is sold or bartered; or is intended to be sold or bartered;

(e) *Commission* means the International Pacific Halibut Commission;

(f) *Daily bag limit* means the maximum number of halibut a person may take in any calendar day from Convention waters;

(g) *Fishing* means the taking, harvesting, or catching of fish, or any activity that can reasonably be expected to result in the taking, harvesting, or catching of fish, including specifically the deployment of any amount or component part of setline gear anywhere in the maritime area;

(h) *Fishing period limit* means the maximum amount of halibut that may be retained and landed by a vessel during one fishing period;

(i) *Land or Offload with respect to halibut*, means the removal of halibut from the catching vessel;

(j) *License* means a halibut fishing license issued by the Commission pursuant to section 4;

(k) *Maritime area*, in respect of the fisheries jurisdiction of a Contracting Party, includes without distinction areas within and seaward of the territorial sea and internal waters of that Party;

(l) *Operator*, with respect to any vessel, means the owner and/or the master or other individual on board and in charge of that vessel;

(m) *Overall length of a vessel* means the horizontal distance, rounded to the nearest foot, between the foremost part of the stem and the aftermost part of the stern (excluding bowsprits, rudders, outboard motor brackets, and similar fittings or attachments);

(n) *Person* includes an individual, corporation, firm, or association;

(o) *Regulatory area* means an area referred to in section 6;

(p) *Setline gear* means one or more stationary, buoyed, and anchored lines with hooks attached;

(q) *Sport fishing* means all fishing other than commercial fishing, treaty Indian ceremonial and subsistence

fishing as referred to in section 22, and customary and traditional fishing as referred to in section 23 and defined in and regulated pursuant to National Marine fisheries Service regulations published in 50 CFR part 300;

(r) *Tender* means any vessel that buys or obtains fish directly from a catching vessel and transports it to a port of landing or fish processor.

(2) In these Regulations, all bearings are true and all positions are determined by the most recent charts issued by the United States National Ocean Service or the Canadian Hydrographic Service.

(3) In these Regulations all weights shall be computed on the basis that the heads of the fish are off and their entrails removed.

4. Licensing Vessels for Area 2A

(1) No person shall fish for halibut from a vessel, nor possess halibut on board a vessel, used either for commercial fishing or as a charter vessel in Area 2A, unless the Commission has issued a license valid for fishing in Area 2A in respect of that vessel.

(2) A license issued for a vessel operating in Area 2A shall be valid only for operating either as a charter vessel or a commercial vessel, but not both.

(3) A vessel with a valid Area 2A commercial license cannot be used to sport fish for Pacific halibut in Area 2A.

(4) A license issued for a vessel operating in the commercial fishery in Area 2A shall be valid for one of the following, but not both.

(a) The directed commercial fishery during the fishing periods specified in paragraph (2) of section 8 and the incidental commercial fishery during the sablefish fishery specified in paragraph (3) of section 8; or

(b) the incidental catch fishery during the salmon troll fishery specified in paragraph (4) of section 8.

(5) A license issued in respect of a vessel referred to in paragraph (1) of this section must be carried on board that vessel at all times and the vessel operator shall permit its inspection by any authorized officer.

(6) The Commission shall issue a license in respect of a vessel, without fee, from its office in Seattle, Washington, upon receipt of a completed, written, and signed ''Application for Vessel License for the Halibut Fishery'' form.

(7) A vessel operating in the directed commercial fishery or the incidental commercial fishery during the sablefish fishery in Area 2A must have its ''Application for Vessel License for the Halibut Fishery'' form postmarked no later than 11:59 p.m. on April 30, or on the first weekday in May if April 30 is a Saturday or Sunday.

(8) A vessel operating in the incidental commercial fishery during the salmon troll season in Area 2A must have its ''Application for Vessel License for the Halibut Fishery'' form postmarked no later than 11:59 p.m. on March 31, or the first weekday in April if March 31 is a Saturday or Sunday.

(9) Application forms may be obtained from any authorized officer or from the Commission.

(10) Information on ''Application for Vessel License for the Halibut Fishery'' form must be accurate.

(11) The ''Application for Vessel License for the Halibut Fishery'' form shall be completed and signed by the vessel owner.

(12) Licenses issued under this section shall be valid only during the year in which they are issued.

(13) A new license is required for a vessel that is sold, transferred, renamed, or redocumented.

(14) The license required under this section is in addition to any license, however designated, that is required under the laws of the United States or any of its States.

(15) The United States may suspend, revoke, or modify any license issued under this section under policies and procedures in Title 15, CFR part 904.

5. In-Season Actions

(1) The Commission is authorized to establish or modify regulations during the season after determining that such action:

(a) Will not result in exceeding the catch limit established preseason for each regulatory area;

(b) Is consistent with the Convention between the United States of America and Canada for the Preservation of the Halibut Fishery of the Northern Pacific Ocean and Bering Sea, and applicable domestic law of either Canada or the United States; and

(c) Is consistent, to the maximum extent practicable, with any domestic catch sharing plans or other domestic allocation programs developed by the United States or Canadian governments.

(2) In-season actions may include, but are not limited to, establishment or modification of the following:

(a) Closed areas;

(b) Fishing periods;

(c) Fishing period limits;

(d) Gear restrictions;

(e) Recreational bag limits;

(f) Size limits; or

(g) Vessel clearances.

(3) In-season changes will be effective at the time and date specified by the Commission.

(4) The Commission will announce in-season actions under this section by providing notice to major halibut processors; Federal, State, United States treaty Indian, Provincial fishery officials, and the media.

6. Regulatory Areas

The following areas shall be regulatory areas for the purposes of the Convention (see Figure 1):

(1) Area 2A includes all waters off the states of California, Oregon, and Washington;

(2) Area 2B includes all waters off British Columbia;

(3) Area 2C includes all waters off Alaska that are east of a line running 340° true from Cape Spencer Light (58°11′57″N. lat., 136°38′18″W. long.) and south and east of a line running 205° true from said light;

(4) Area 3A includes all waters between Area 2C and a line extending from the most northerly point on Cape Aklek (57°41′15″ N. lat., 155°35′00″ W. long.) to Cape Ikolik (57°17′17″ N. lat., 154°47′18″ W. long.), then along the Kodiak Island coastline to Cape Trinity (56°44′50″ N. lat., 154°08′44″ W. long.), then 140° true;

(5) Area 3B includes all waters between Area 3A and a line extending 150° true from Cape Lutke (54°29′00″ N. lat., 164°20′00″ W. long.) and south of 54°49′00″ N. lat. in Isanotski Strait;

(6) Area 4A includes all waters in the Gulf of Alaska west of Area 3B and in the Bering Sea west of the closed area defined in section 10 that are east of 172°00′00″ W. long. and south of 56°20′00″ N. lat.;

(7) Area 4B includes all waters in the Bering Sea and the Gulf of Alaska west of Area 4A and south of 56°20′00″N. lat.;

(8) Area 4C includes all waters in the Bering Sea north of Area 4A and north of the closed area defined in section 10 which are east of 171°00′00″ W. long., south of 58°00′00″ N. lat., and west of 168°00′00″ W. long.;

(9) Area 4D includes all waters in the Bering Sea north of Areas 4A and 4B, north and west of Area 4C, and west of 168°00′00″ W. long.;

(10) Area 4E includes all waters in the Bering Sea north and east of the closed area defined in section 10, east of 168°00′00″ W. long., and south of 65°34′00″ N. lat..

7. Fishing in Regulatory Area 4E and 4D

(1) Section 7 applies only to any person fishing, or vessel that is used to fish for, Area 4E Community Development Quota (CDQ) or Area 4D CDQ halibut provided that the total annual halibut catch of that person or

vessel is landed at a port within Area 4E or 4D.

(2) A person may retain halibut taken with setline gear in Area 4E CDQ and 4D CDQ fishery that are smaller than the size limit specified in section 13, provided that no person may sell or barter such halibut.

(3) The manager of a CDQ organization that authorizes persons to harvest halibut in the Area 4E or 4D CDQ fisheries must report to the Commission the total number and weight of undersized halibut taken and retained by such persons pursuant to section 7, paragraph (2). This report, which shall include data and methodology used to collect the data, must be received by the Commission prior to December 1 of the year in which such halibut were harvested.

8. Fishing Periods

(1) The fishing periods for each regulatory area apply where the catch limits specified in section 11 have not been taken.

(2) Each fishing period in the Area 2A directed fishery[1] shall begin at 0800 hours and terminate at 1800 hours local time on June 26, July 10, July 24, August 7, August 21, September 4, and September 18 unless the Commission specifies otherwise.

(3) Notwithstanding paragraph (7) of section 11, an incidental catch fishery[2] is authorized during the sablefish seasons in Area 2A in accordance with regulations promulgated by National Marine Fisheries Service (NMFS).

(4) Notwithstanding paragraph (2), and paragraph (7) of section 11, an incidental catch fishery is authorized during salmon troll seasons in Area 2A in accordance with regulations promulgated by the National Marine Fisheries Service (NMFS).

(5) The fishing period in Areas 2B, 2C, 3A, 3B, 4A, 4B, 4C, 4D, and 4E shall begin at 1200 hours local time on March 18 and terminate at 1200 hours local time on November 18, unless the Commission specifies otherwise.

(6) All commercial fishing for halibut in Areas 2A, 2B, 2C, 3A, 3B, 4A, 4B, 4C, 4D, and 4E shall cease at 1200 hours local time on November 18.

9. Closed Periods

(1) No person shall engage in fishing for halibut in any regulatory area other than during the fishing periods set out in section 8 in respect of that area.

(2) No person shall land or otherwise retain halibut caught outside a fishing period applicable to the regulatory area where the halibut was taken.

(3) Subject to paragraphs (7), (8), (9), and (10) of section 19, these Regulations do not prohibit fishing for any species of fish other than halibut during the closed periods.

(4) Notwithstanding paragraph (3), no person shall have halibut in his/her possession while fishing for any other species of fish during the closed periods.

(5) No vessel shall retrieve any halibut fishing gear during a closed period if the vessel has any halibut on board.

(6) A vessel that has no halibut on board may retrieve any halibut fishing gear during the closed period after the operator notifies an authorized officer or representative of the Commission prior to that retrieval.

(7) After retrieval of halibut gear in accordance with paragraph (6), the vessel shall submit to a hold inspection at the discretion of the authorized officer or representative of the Commission.

(8) No person shall retain any halibut caught on gear retrieved referred to in paragraph (6).

(9) No person shall possess halibut aboard a vessel in a regulatory area during a closed period unless that vessel is in continuous transit to or within a port in which that halibut may be lawfully sold.

BILLING CODE 3510–22–S

PACIFIC HALIBUT FISHERY REGULATIONS 2001

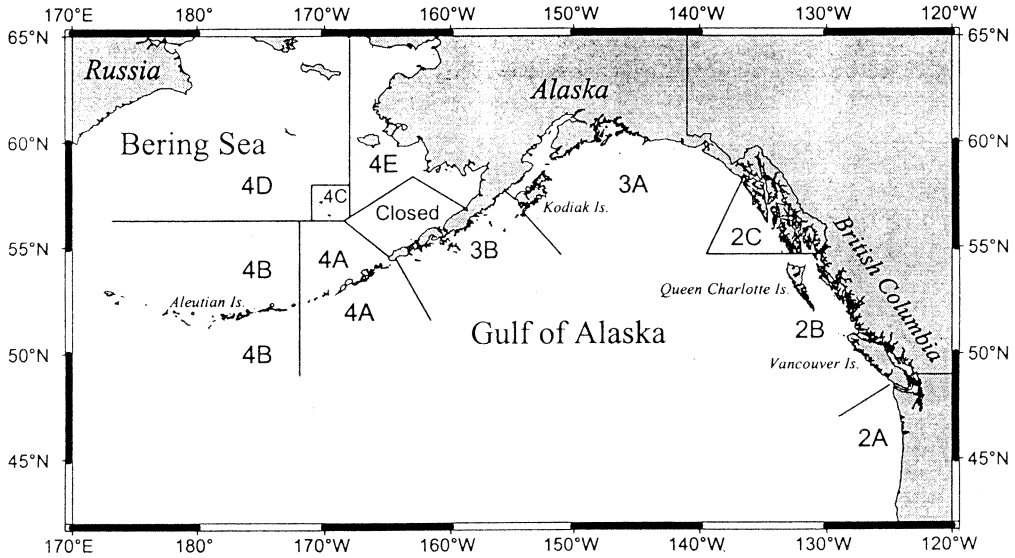

Figure 1. Regulatory areas for the Pacific halibut fishery

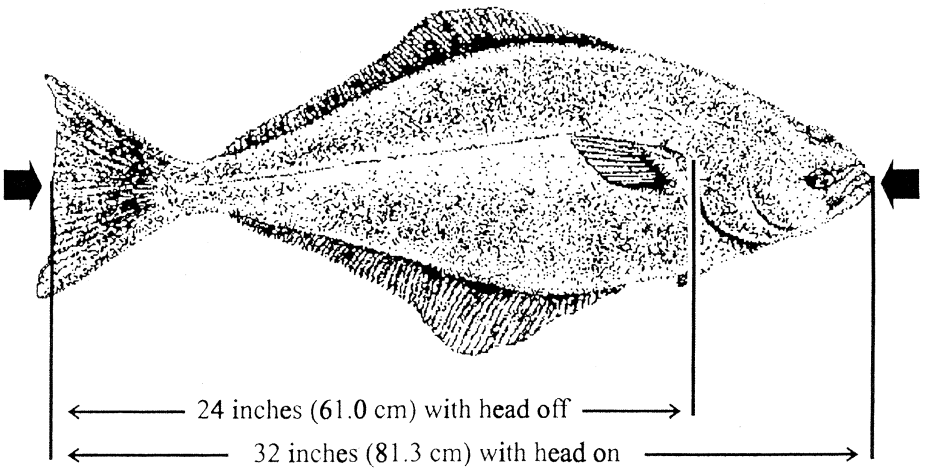

Figure 2. Minimum commercial size

BILLING CODE 3510–22–C

10. Closed Area

All waters in the Bering Sea north of 55°00′00″N. lat. in Isanotski Strait that are enclosed by a line from Cape Sarichef Light (54°36′00″ N. lat., 164°55′42″ W. long.) to a point at 56°20′00″ N. lat., 168°30′00″ W. long.; thence to a point at 58°21′25″ N. lat., 163°00′00″ W. long.; thence to Strogonof Point (56°53′18″ N. lat., 158°50′37″ W. long.); and then along the northern coasts of the Alaska Peninsula and Unimak Island to the point of origin at Cape Sarichef Light are closed to halibut fishing and no person shall fish for halibut therein or have halibut in his/her possession while in those waters except in the course of a continuous transit across those waters. All waters in Isanotski Strait between 55°00′00″N. lat. and 54°49′00″N. lat. are closed to halibut fishing.

11. Catch Limits

(1) The total allowable catch of halibut to be taken during the halibut fishing periods specified in section 8 shall be limited to the weight expressed in pounds or metric tons shown in the following table:

Regulatory Area	Catch Limit in Pounds	Catch Limit in Metric Tons
2A: directed commercial, and incidental commercial during salmon troll fishery	262,000	118.8
2A: incidental commercial during sablefish fishery	88,389	40.1
2B	11,750,000	5,328.8
2C	8,500,000	3,854.9
3A	22,630,000	10,263.0
3B	17,130,000	7,768.7
4A	4,970,000	2,254.0
4B	4,180,000	1,895.7
4C	2,030,000	920.6
4D	2,030,000	920.6
4E	390,000	176.9

(2) Notwithstanding paragraph (1), regulations pertaining to the division of the Area 2A catch limit between the directed commercial fishery and the incidental catch fishery as described in paragraph (4) of section 8 will be promulgated by the National Marine Fisheries Service and published in the **Federal Register**.

(3) The Commission shall determine and announce to the public the date on which the catch limit for Area 2A will be taken.

(4) Notwithstanding paragraph (1), Area 2B will close only when all Individual Vessel Quotas assigned by Canada's Department of Fisheries and Oceans are taken, or November 18, whichever is earlier.

(5) Notwithstanding paragraph (1), Areas 2C, 3A, 3B, 4A, 4B, 4C, 4D, and 4E will each close only when all Individual Fishing Quotas and all Community Development Quotas issued by the National Marine Fisheries Service have been taken, or November 18, whichever is earlier.

(6) If the Commission determines that the catch limit specified for Area 2A in paragraph (1) would be exceeded in an unrestricted 10–hour fishing period as specified in paragraph (2) of section 8, the catch limit for that area shall be considered to have been taken unless fishing period limits are implemented.

(7) When under paragraphs (2), (3), and (6) the Commission has announced a date on which the catch limit for Area 2A will be taken, no person shall fish for halibut in that area after that date for the rest of the year, unless the Commission has announced the reopening of that area for halibut fishing.

12. Fishing Period Limits

(1) It shall be unlawful for any vessel to retain more halibut than authorized by that vessel's license in any fishing period for which the Commission has announced a fishing period limit.

(2) The operator of any vessel that fishes for halibut during a fishing period when fishing period limits are in effect must, upon commencing an offload of halibut to a commercial fish processor, completely offload all halibut on board said vessel to that processor and ensure that all halibut is weighed and reported on State fish tickets.

(3) The operator of any vessel that fishes for halibut during a fishing period when fishing period limits are in effect must, upon commencing an offload of halibut other than to a commercial fish processor, completely offload all halibut on board said vessel and ensure that all halibut are weighed and reported on State fish tickets.

(4) The provisions of paragraph (3) are not intended to prevent retail over-the-side sales to individual purchasers so long as all the halibut on board is ultimately offloaded and reported.

(5) When fishing period limits are in effect, a vessel's maximum retainable catch will be determined by the Commission based on

(a) the vessel's overall length in feet and associated length class;

(b) the average performance of all vessels within that class; and

(c) the remaining catch limit.

(6) Length classes are shown in the following table:

Overall Length	Vessel Class
1–25	A
26–30	B
31–35	C
36–40	D
41–45	E
46–50	F
51–55	G
56+	H

(7) Fishing period limits in Area 2A apply only to the directed halibut fishery referred to in paragraph (2) of section 8.

13. Size Limits

(1)No person shall take or possess any halibut that

(a) with the head on, is less than 32 inches (81.3 cm) as measured in a straight line, passing over the pectoral fin from the tip of the lower jaw with the mouth closed, to the extreme end of the middle of the tail, as illustrated in Figure 2; or

(b) with the head removed, is less than 24 inches (61.0 cm) as measured from the base of the pectoral fin at its most anterior point to the extreme end of the middle of the tail, as illustrated in Figure 2.

(2) No person shall possess on board a vessel a halibut filleted or a halibut that has been mutilated, or otherwise disfigured in any manner that prevents the determination of whether the halibut complies with the size limits specified in this section, except that this paragraph shall not prohibit the possession on board a vessel:

(a) Of halibut cheeks cut from halibut caught by persons authorized to process the halibut on board in accordance with NMFS regulations published at 50 CFR part 679; and

(b) Of fillets from halibut that have been offloaded in accordance with section 17 may be possessed on board a vessel in the port of landing up to 1800 hours local time on the calendar day following the offload.[3]

(3) No person on board a vessel fishing for, or tendering, halibut caught in Area 2A shall possess any halibut that has had its head removed.

14. Careful Release of Halibut

(1) All halibut that are caught and are not retained shall be immediately released outboard of the roller and returned to the sea with a minimum of injury by

(a) hook straightening;

(b) cutting the gangion near the hook; or

(c) carefully removing the hook by twisting it from the halibut with a gaff.

15. Vessel Clearance in Area

(1) The operator of any vessel that fishes for halibut in Areas 4A, 4B, 4C, or 4D must obtain a vessel clearance before fishing in any of these areas, and before the landing of any halibut caught in any of these areas, unless specifically exempted in paragraphs (10), (13), (14), (15), or (16).

(2) An operator obtaining a vessel clearance required by paragraph (1) must obtain the clearance in person from the authorized clearance personnel and sign the IPHC form documenting that a clearance was obtained, except that when the clearance is obtained via VHF radio referred to in paragraphs 5, 8, and 9, the authorized clearance personnel must sign the IPHC form documenting that the clearance was obtained.

(3) The vessel clearance required under paragraph (1) prior to fishing in Area 4A may be obtained only at Nazan Bay on Atka Island, Dutch Harbor or Akutan, Alaska, from an authorized officer of the United States, a representative of the Commission, or a designated fish processor.

(4) The vessel clearance required under paragraph (1) prior to fishing in Area 4B may only be obtained at Nazan Bay on Atka Island or Adak, Alaska, from an authorized officer of the United States, a representative of the Commission, or a designated fish processor.

(5) The vessel clearance required under paragraph (1) prior to fishing in Area 4C or 4D may be obtained only at St. Paul or St. George, Alaska, from an authorized officer of the United States, a representative of the Commission, or a designated fish processor by VHF radio and allowing the person contacted to confirm visually the identity of the vessel.

(6) The vessel operator shall specify the specific regulatory area in which fishing will take place.

(7) Before unloading any halibut caught in Area 4A, a vessel operator may obtain the clearance required under paragraph (1) only in Dutch Harbor or Akutan, Alaska, by contacting an authorized officer of the United States, a representative of the Commission, or a designated fish processor.

(8) Before unloading any halibut caught in Area 4B, a vessel operator may obtain the clearance required under paragraph (1) only in Nazan Bay on Atka Island or Adak, by contacting an authorized officer of the United States, a representative of the Commission, or a designated fish processor by VHF radio or in person.

(9) Before unloading any halibut caught in Area 4C or 4D, a vessel operator may obtain the clearance required under paragraph (1) only in St. Paul, St. George, Dutch Harbor, or Akutan, Alaska, either in person or by contacting an authorized officer of the United States, a representative of the Commission, or a designated fish processor. The clearances obtained in St. Paul or St. George, Alaska, can be obtained by VHF radio and allowing the person contacted to confirm visually the identity of the vessel.

(10) Any vessel operator who complies with the requirements in section 18 for possessing halibut on board a vessel that was caught in more than one regulatory area in Area 4 is exempt from the clearance requirements of paragraph (1) of this section, but must comply with the following requirements:

(a) The operator of the vessel must obtain a vessel clearance prior to fishing in Area 4 in either Dutch Harbor, Akutan, St. Paul, St. George, Adak, or Nazan Bay on Atka Island by contacting an authorized officer of the United States, a representative of the Commission, or a designated fish processor. The clearance obtained in St. Paul, St. George, Adak, or Nazan Bay on Atka Island can be obtained by VHF radio and allowing the person contacted to confirm visually the identity of the vessel. This clearance will list the Areas in which the vessel will fish; and

(b) Before unloading any halibut from Area 4, the vessel operator must obtain a vessel clearance from Dutch Harbor, Akutan, St. Paul, St. George, Adak, or Nazan Bay on Atka Island by contacting an authorized officer of the United States, a representative of the Commission, or a designated fish processor. The clearance obtained in St. Paul or St. George can be obtained by VHF radio and allowing the person contacted to confirm visually the identity of the vessel. The clearance obtained in Adak or Nazan Bay on Atka Island can be obtained by VHF radio.

(11) Vessel clearances shall be obtained between 0600 and 1800 hours, local time.

(12) No halibut shall be on board the vessel at the time of the clearances required prior to fishing in Area 4.

(13) Any vessel that is used to fish for halibut only in Area 4A and lands its total annual halibut catch at a port within Area 4A is exempt from the clearance requirements of paragraph (1).

(14) Any vessel that is used to fish for halibut only in Area 4B and lands its total annual halibut catch at a port within Area 4B is exempt from the clearance requirements of paragraph (1).

(15) Any vessel that is used to fish for halibut only in Area 4C and lands its total annual halibut catch at a port within Area 4C is exempt from the clearance requirements of paragraph (1).

(16) Any vessel that is used to fish for halibut only in Areas 4D or 4E and lands its total annual halibut catch at a port within Areas 4D, 4E, or the closed area defined in section 10, is exempt from the clearance requirements of paragraph (1).

16. Logs

(1) The operator of any U.S. vessel fishing for halibut that has an overall length of 26 feet (7.9 meters) or greater shall maintain an accurate log of halibut fishing operations in the Groundfish/Individual Fishing Quota (IFQ) Daily Fishing Longline and Pot Gear Logbook provided by NMFS, or Alaska hook-and-line logbook provided by Petersburg Vessel Owners Association or Alaska Longline Fisherman's Association, or

[3] DFO has more restrictive regulations therefore section 13(2)b does not apply to fish caught in Area 2B or landed in British Columbia.

the Alaska Department of Fish and Game (ADF&G) longline-pot logbook, or the logbook provided by IPHC.

(2) The logbook referred to in paragraph (1) must include the following information:

(a) The name of the vessel and the state vessel number (ADF&G) or Washington Department of Fish and Wildlife or Oregon Department of Fish and Wildlife or California Department of Fish and Game vessel number);

(b) The date(s) upon which the fishing gear is set or retrieved;

(c) The latitude and longitude or loran coordinates or a direction and distance from a point of land for each set or day;

(d) The number of skates deployed or retrieved, and number of skates lost; and

(e) The total weight or number of halibut retained for each set or day.

(3) The logbook referred to in paragraph (1) shall be

(a) maintained on board the vessel;

(b) updated not later than 24 hours after midnight local time for each day fished and prior to the offloading or sale of halibut taken during that fishing trip;

(c) retained for a period of two years by the owner or operator of the vessel;

(d) open to inspection by an authorized officer or any authorized representative of the Commission upon demand; and

(e) kept on board the vessel when engaged in halibut fishing, during transits to port of landing, and until the offloading of all halibut is completed.

(4) The log referred to in paragraph (1) does not apply to the incidental halibut fishery during the salmon troll season in Area 2A defined in paragraph (4) of section 8.

(5) The operator of any Canadian vessel fishing for halibut shall maintain an accurate log recorded in the British Columbia Halibut Fishery logbook provide by DFO.

(6) The logbook referred to in paragraph (5) must include the following information:

(a) The name of the vessel and the Department of Fisheries and Ocean's vessel number;

(b) The date(s) upon which the fishing gear is set or retrieved;

(c) The latitude and longitude or loran coordinates or a direction and distance from a point of land for each set or day;

(d) The number of skates deployed or retrieved, and number of skates lost; and

(e) The total weight or number of halibut retained for each set or day.

(7) The logbook referred to in paragraph (5) shall be

(a) maintained on board the vessel;

(b) updated not later than 24 hours after midnight local time for each day fished and prior to the offloading or sale of halibut taken during that fishing trip;

(c) retained for a period of two years by the owner or operator of the vessel;

(d) open to inspection by an authorized officer or any authorized representative of the Commission upon demand;

(e) kept on board the vessel when engaged in halibut fishing, during transits to port of landing, and until the offloading of all halibut is completed;

(f) mailed to the Department of Fisheries and Oceans (white copy) within seven days of offloading; and

(g) mailed to the IPHC (yellow copy) within seven days of the final offload if not collected by an International Pacific Halibut Commission employee.

(8) The poundage of any halibut that is not sold, but is utilized by the vessel operator, his/her crew members, or any other person for personal use, shall be recorded in the vessel's log within 24–hours of offloading.

(9) No person shall make a false entry in a log referred to in this section.

17. Receipt and Possession of Halibut

(1) No person shall receive halibut from a United States vessel that does not have on board the license required by section 4.

(2) No person shall offload halibut from a vessel unless the gills and entrails have been removed prior to offloading.

(3) It shall be the responsibility of a vessel operator who lands halibut to continuously and completely offload at a single offload site all halibut on board the vessel.

(4) A registered buyer (as that term is defined in regulations promulgated by the NMFS and codified at 50 CFR part 679) who receives halibut harvested in Individual Fishing Quota (IFQ) and Community Development Quota (CDQ) fisheries in Areas 2C, 3A, 3B, 4A, 4B, 4C, 4D, and 4E, directly from the vessel operator that harvested such halibut must weigh all the halibut received and record the following information on Federal catch reports: date of offload; name of vessel; vessel number; scale weight obtained at the time of offloading, including the weight (in pounds) of halibut purchased by the registered buyer, the weight (in pounds) of halibut offloaded in excess of the IFQ or CDQ, the weight of halibut (in pounds) retained for personal use or for future sale, and the weight (in pounds) of halibut discarded as unfit for human consumption.

(5) The first recipient, commercial fish processor, or buyer in the United States who purchases or receives halibut directly from the vessel operator that harvested such halibut must weigh and record all halibut received and record the following information on state fish tickets: the date of offload, vessel number, total weight obtained at the time of offload including the weight (in pounds) of halibut purchased, the weight (in pounds) of halibut offloaded in excess of the IFQ, CDQ, or fishing period limits, the weight of halibut (in pounds) retained for personal use or for future sale, and the weight (in pounds) of halibut discarded as unfit for human consumption.

(6) The master or operator of a Canadian vessel that was engaged in halibut fishing must weigh and record all halibut on board said vessel at the time offloading commences and record on Provincial fish tickets or Federal catch reports the date, locality, name of vessel, the name(s) of the person(s) from whom the halibut was purchased; and the scale weight obtained at the time of offloading of all halibut on board the vessel including the pounds purchased; pounds in excess of individual vessel quotas; pounds retained for personal use; and pounds discarded as unfit for human consumption.

(7) No person shall make a false entry on a State or Provincial fish ticket or a Federal catch or landing report referred to in paragraphs (4), (5), and (6) of section 17.

(8) A copy of the fish tickets or catch reports referred to in paragraphs (4), (5), and (6) shall be

(a) retained by the person making them for a period of three years from the date the fish tickets or catch reports are made; and

(b) open to inspection by an authorized officer or any authorized representative of the Commission.

(9) No person shall possess any halibut taken or retained in contravention of these Regulations.

(10) When halibut are delivered to other than a commercial fish processor the records required by paragraph (5) shall be maintained by the operator of the vessel from which that halibut was caught, in compliance with paragraph (8).

(11) It shall be unlawful to enter a Halibut Commission license number on a State fish ticket for any vessel other than the vessel actually used in catching the halibut reported thereon.

18. Fishing Multiple Regulatory Areas

(1) Except as provided in this section, no person shall possess at the same time on board a vessel halibut caught in more than one regulatory area.

(2) Halibut caught in Regulatory Areas 2C, 3A, and 3B may be possessed on board a vessel at the same time providing the operator of the vessel:

(a) Has a NMFS-certified observer on board when required by NMFS regulations[4] published at 50 CFR 679.7(f)(4); and

(b) Can identify the regulatory area in which each halibut on board was caught by separating halibut from different areas in the hold, tagging halibut, or by other means.

(3) Halibut caught in Regulatory Areas 4A, 4B, 4C, and 4D may be possessed on board a vessel at the same time providing the operator of the vessel:

(a) Has a NMFS-certified observer on board the vessel when halibut caught in different regulatory areas are on board; and

(b) Can identify the regulatory area in which each halibut on board was caught by separating halibut from different areas in the hold, tagging halibut, or by other means.

(4) Halibut caught in Regulatory Areas 4A, 4B, 4C, and 4D may be possessed on board a vessel when in compliance with paragraph (3) and if halibut from Area 4 are on board the vessel, the vessel can have halibut caught in Regulatory Areas 2C, 3A, and 3B on board if in compliance with paragraph (2).

19. Fishing Gear

(1) No person shall fish for halibut using any gear other than hook and line gear.

(2) No person shall possess halibut taken with any gear other than hook and line gear.

(3) No person shall possess halibut while on board a vessel carrying any trawl nets or fishing pots capable of catching halibut, except that in Areas 2C, 3A, 3B, 4A, 4B, 4C, 4D, or 4E, halibut heads, skin, entrails, bones or fins for use as bait may be possessed on board a vessel carrying pots capable of catching halibut, provided that a receipt documenting purchase or transfer of these halibut parts is on board the vessel.

(4) All setline or skate marker buoys carried on board or used by any United States vessel used for halibut fishing shall be marked with one of the following:

(a) The vessel's name;

(b) The vessel's state license number; or

(c) The vessel's registration number.

(5) The markings specified in paragraph (4) shall be in characters at least four inches in height and one-half inch in width in a contrasting color visible above the water and shall be maintained in legible condition.

(6) All setline or skate marker buoys carried on board or used by a Canadian vessel used for halibut fishing shall be

(a) floating and visible on the surface of the water; and

(b) legibly marked with the identification plate number of the vessel engaged in commercial fishing from which that setline is being operated.

(7) No person on board a vessel from which setline gear was used to fish for any species of fish anywhere in Area 2A during the 72–hour period immediately before the opening of a halibut fishing period shall catch or possess halibut anywhere in those waters during that halibut fishing period.

(8) No vessel from which setline gear was used to fish for any species of fish anywhere in Area 2A during the 72–hour period immediately before the opening of a halibut fishing period may be used to catch or possess halibut anywhere in those waters during that halibut fishing period.

(9) No person on board a vessel from which setline gear was used to fish for any species of fish anywhere in Areas 2B, 2C, 3A, 3B, 4A, 4B, 4C, 4D, or 4E during the 72–hour period immediately before the opening of the halibut fishing season shall catch or possess halibut anywhere in those areas until the vessel has removed all of its setline gear from the water and has either

(a) made a landing and completely offloaded its entire catch of other fish; or

(b) submitted to a hold inspection by an authorized officer.

(10) No vessel from which setline gear was used to fish for any species of fish anywhere in Areas 2B, 2C, 3A, 3B, 4A, 4B, 4C, 4D, or 4E during the 72–hour period immediately before the opening of the halibut fishing season may be used to catch or possess halibut anywhere in those areas until the vessel has removed all of its setline gear from the water and has either

(a) made a landing and completely offloaded its entire catch of other fish; or

(b) submitted to a hold inspection by an authorized officer.

(11) Notwithstanding any other provision in these regulations, a person may retain and possess, but not sell or barter, halibut taken with trawl gear only as authorized by Prohibited Species Donation regulations of the National Marine Fisheries Service.

20. Retention of Tagged Halibut

(1) Nothing contained in these Regulations prohibits any vessel at any time from retaining and landing a halibut that bears a Commission tag at the time of capture, if the halibut with the tag still attached is reported at the time of landing and made available for examination by a representative of the Commission or by an authorized officer.

(2) After examination and removal of the tag by a representative of the Commission or an authorized officer, the halibut:

(a) May be retained for personal use; or

(b) May be sold if it complies with the provisions of section 13.

21. Supervision of Unloading and Weighing

The unloading and weighing of halibut may be subject to the supervision of authorized officers to assure the fulfillment of the provisions of these Regulations.

22. Fishing by United States Treaty Indian Tribes

(1) Halibut fishing in subarea 2A–1 by members of United States treaty Indian tribes located in the State of Washington shall be regulated under regulations promulgated by the National Marine Fisheries Service and published in the **Federal Register**.

(2) Subarea 2A–1 includes all waters off the coast of Washington that are north of 46°53′18″ N. lat. and east of 125°44′00″ W. long., and all inland marine waters of Washington.

(3) Section 13 (size limits), section 14 (careful release of halibut), section 16 (logs), section 17 (receipt and possession of halibut) and section 19 (fishing gear), except paragraphs 7 and 8 of section 19, apply to commercial fishing for halibut in subarea 2A–1 by the treaty Indian tribes.

(3) Commercial fishing for halibut in subarea 2A–1 is permitted with hook and line gear from March 18 through November 18, or until 467,500 pounds (212.0 metric tons) is taken, whichever occurs first.

(4) Ceremonial and subsistence fishing for halibut in subarea 2A–1 is permitted with hook and line gear from January 1 through December 31, and is estimated to take 16,000 pounds (7.3 metric tons).

23. Customary and Traditional Fishing in Alaska

(1) Customary and traditional fishing for halibut in Regulatory Areas 2C, 3A, 3B, 4A, 4B, 4C, 4D, and 4E shall be governed pursuant to regulations promulgated by the National Marine Fisheries Service and published in 50 CFR part 300.

(2) Customary and traditional fishing is authorized from January 1 through December 31.

(3) Section 23 is in effect only when National Marine Fisheries Service publishes subsistence (customary and traditional use) regulations in 50 CFR part 300.

24. Sport Fishing for Halibut

(1) No person shall engage in sport fishing for halibut using gear other than a single line with no more than two hooks attached; or a spear.

(2) In all waters off Alaska:

(a) The sport fishing season is from February 1 to December 31;

(b) The daily bag limit is two halibut of any size per day per person.

(3) In all waters off British Columbia:

(a) The sport fishing season is from February 1 to December 31;

(b) The daily bag limit is two halibut of any size per day per person.

(4) In all waters off California, Oregon, and Washington:

(a) The total allowable catch of halibut shall be limited to

(1) 214,110 pounds (97.1 mt) in waters off Washington and

(2) 262,001 pounds (118.8 mt) in waters off California and Oregon;

(b) The sport fishing subareas, subquotas, fishing dates, and daily bag limits are as follows, except as modified under the inseason actions in Section 24. All sport fishing in Area 2A (except for fish caught in the North Washington coast area and landed into Neah Bay) is managed on a ''port of landing'' basis, whereby any halibut landed into a port counts toward the quota for the area in which that port is located, and the regulations governing the area of landing apply, regardless of the specific area of catch.

(i) In Puget Sound and the U.S. waters in the Strait of Juan de Fuca, east of a line extending from 48°17′30″ N. lat., 124°23′70″ W. long. north to 48°24′70″ N. lat., 124°23′10″ W. long., there is no quota. This area is managed by setting a season that is projected to result in a catch of 57,393 lb (26 mt).

(A) The fishing season in eastern Puget Sound (east of 123°49′30″ W. long.) is May 9 through July 12 and the fishing season in western Puget Sound (west of 123°49′30″ W. long.) is May 23 through July 26, 5 days a week (Thursday through Monday).

(B) The daily bag limit is one halibut of any size per day per person.

(ii) In the area off the north Washington coast, west of the line described in paragraph (4)(b)(i) of this section and north of the Queets River (47°31′42″ N. lat.), the quota for landings into ports in this area is 108,030 lb (49 mt). Landings into Neah Bay of halibut caught in this area will be governed by this paragraph.

(A) The fishing seasons are:

(*1*) Commencing May 1 and continuing 5 days a week (Tuesday through Saturday) until 70,030 lb (31.8 mt) are estimated to have been taken and the season is closed by the Commission, or until June 30, whichever occurs first.

(*2*) From July 1 through July 4, and continuing thereafter for 5 days a week (Tuesday through Saturday) until the overall area quota of 108,030 lb (49 mt) is estimated to have been taken and the area is closed by the Commission, or until September 30, whichever occurs first.

(B) The daily bag limit is one halibut of any size per day per person.

(C) A portion of this area about 19 nm (35 km) southwest of Cape Flattery is closed to sport fishing for halibut. The closed area is within a rectangle defined by these four corners: 48°18′00″ N. lat., 125°11′00″ W. long.; 48°18′00″ N. lat., 124°59′00″ W. long.; 48°00′00″ N. lat., 125°11′00″ W. long.; and, 48°00′00″ N. lat., 124°59′00″ W. long.

(iii) In the area between the Queets River, WA, and Leadbetter Point, WA (46°38′10″ N. lat.), the quota for landings into ports in this area is 42,739 lb (19.4 mt).

(A) The fishing season commences on May 1 and continues 5 days a week (Sunday through Thursday) in all waters, and commences on May 1 and continues 7 days a week in the area from Queets River south to 47°00′00 N. lat. and east of 124°40′00″ W. long., until 42,739 lb (19.4 mt) is estimated to have been taken and the season is closed by the Commission, or until September 30, whichever occurs first.

(B) The daily bag limit is one halibut of any size per day per person.

(iv) In the area between Leadbetter Point, WA, and Cape Falcon, OR (45°46′00″ N. lat.), the quota for landings into ports in this area is 11,188 lb (5.1 mt).

(A) The fishing season commences on May 1, and continues every day through September 30, or until 11,188 lb (5.1 mt) are estimated to have been taken and the area is closed by the Commission, whichever occurs first.

(B) The daily bag limit is the first halibut taken, per person, of 32 inches (81.3 cm) or greater in length.

(v) In the area off Oregon between Cape Falcon and the Siuslaw River at the Florence north jetty (44°01′08″ N. lat.), the quota for landings into ports in this area is 230,639 lb (104.6 mt).

(A) The fishing seasons are:

(*1*) The first season commences May 1 and continues every day through September 30, in the area inside the 30–fathom (55 m) curve nearest to the coastline as plotted on National Ocean Service charts numbered 18520, 18580, and 18600, or until the combined subquotas of the north central and south central inside 30–fathom fisheries (19,797 lb (9.0 mt)) or any inseason revised subquota is estimated to have been taken and the season is closed by the Commission, whichever is earlier.

(*2*) The second season is open on May 10, 11, 17, and 18. The projected catch for this season is 156,835 lb (71.1 mt). If sufficient unharvested catch remains for an additional days fishing, the season will reopen. Dependent on the amount of unharvested catch available, the potential season reopening dates will be: June 7, 8, 21, 22. If a decision is made inseason by NMFS to allow fishing on either of these additional dates, notice of the opening will be announced on the NMFS hotline 206–526–6667 or 800–662–9825. No halibut fishing will be allowed on the additional dates unless the opening date is announced on the NMFS hotline.

(*3*)The third season is open on August 2 and/or 3 or until the combined quotas for the all-depth fisheries in the subareas described in paragraphs (v) and (vi) of this section totaling 229,103 lb (103.9 mt) are estimated to have been taken and the area is closed by the Commission, whichever is earlier. An inseason announcement will be made in mid-July as to whether the fishery will be open on August 2 and/or 3. If the harvest during this opening does not achieve the 229,103 lb (103.9 mt) quota, the season will reopen. Dependent on the amount of unharvested catch available, the potential season reopening dates will be: August 23, 24, September 20, 21. If a decision is made inseason to allow fishing on one or more of these dates, notice of the reopening date will be announced on the NMFS hotline 206–526–6667 or 800–662–9825.

(B) The daily bag limit is the first halibut taken, per person, of 32 inches (81.3 cm) or greater in length.

(vi) In the area off Oregon between the Siuslaw River at the Florence north jetty and Humbug Mountain, Oregon (42°40′30″ N. lat.), the quota for landings into ports in this area is 18,261 lb (8.3 mt).

(A) The fishing seasons are:

(*1*) The first season commences May 1 and continues every day through September 30, in the area inside the 30–fathom (55 m) curve nearest to the coastline as plotted on National Ocean Service charts numbered 18520, 18580, and 18600, or until the combined subquotas of the north central and south central inside 30–fathom fisheries (19,797 lb (9.0 mt)) or any inseason revised subquota is estimated to have been taken and the season is closed by the Commission, whichever is earlier.

(*2*) The second season is open on May 10, 11, 17, and 18. The projected catch for this season is 14,609 lb (6.6 mt). If

sufficient unharvested catch remains for an additional days fishing, the season will reopen. Dependent on the amount of unharvested catch available, the potential season reopening dates will be: June 7, 8, 21, 22. If a decision is made inseason by NMFS to allow fishing on either of these additional dates, notice of the opening will be announced on the NMFS hotline 206–526–6667 or 800–662–9825. No halibut fishing will be allowed on the additional dates unless the opening date is announced on the NMFS hotline.

(*3*) The third season is open on August 2 and/or 3 or until the combined quotas for the all-depth fisheries in the subareas described in paragraphs (v) and (vi) of this section totaling 229,103 lb (103.9 mt) are estimated to have been taken, and the area is closed by the Commission, whichever is earlier. An inseason announcement will be made in mid-July as to whether the fishery will be open on August 2 and/or 3. If the harvest during this opening does not achieve the 229,103 lb (103.9 mt) quota, the season will reopen. Dependent on the amount of unharvested catch available, the potential season reopening dates will be: August 23, 24, September 20, 21. If a decision is made inseason to allow fishing on one or more of these dates, notice of the reopening date will be announced on the NMFS hotline 206–526–6667 or 800–662–9825.

(B) The daily bag limit is the first halibut taken, per person, of 32 inches (81.3 cm) or greater in length.

(vii) In the area south of Humbug Mountain, OR (42°40′30″ N. lat.) and off the California coast, there is no quota. This area is managed on a season that is projected to result in a catch of less than 7,860 lb (3.6 mt).

(A) The fishing season will commence on May 1 and continue every day through September 30.

(B) The daily bag limit is the first halibut taken, per person, of 32 inches (81.3 cm) or greater in length.

(c) The Commission shall determine and announce closing dates to the public for any area in which the subquotas in this Section are estimated to have been taken.

(d) When the Commission has determined that a subquota under paragraph (4)(b) of this section is estimated to have been taken, and has announced a date on which the season will close, no person shall sport fish for halibut in that area after that date for the rest of the year, unless a reopening of that area for sport halibut fishing is scheduled in accordance with the Catch Sharing Plan for Area 2A, or announced by the Commission.

(5) Any minimum overall size limit promulgated under IPHC or NMFS regulations shall be measured in a straight line passing over the pectoral fin from the tip of the lower jaw with the mouth closed, to the extreme end of the middle of the tail.

(6) No person shall fillet, mutilate, or otherwise disfigure a halibut in any manner that prevents the determination of minimum size or the number of fish caught, possessed, or landed.

(7) The possession limit for halibut in the waters off the coast of Alaska is two daily bag limits.

(8) The possession limit for halibut in the waters off the coast of British Columbia is three halibut.

(9) The possession limit for halibut in the waters off Washington, Oregon, and California is the same as the daily bag limit.

(10) The possession limit for halibut on land in Area 2A is two daily bag limits.

(11) Any halibut brought aboard a vessel and not immediately returned to the sea with a minimum of injury will be included in the daily bag limit of the person catching the halibut.

(12) No person shall be in possession of halibut on a vessel while fishing in a closed area.

(13) No halibut caught by sport fishing shall be offered for sale, sold, traded, or bartered.

(14) No halibut caught in sport fishing shall be possessed on board a vessel when other fish or shellfish aboard the said vessel are destined for commercial use, sale, trade, or barter.

(15) The operator of a charter vessel shall be liable for any violations of these regulations committed by a passenger aboard said vessel.

25. Flexible Inseason Management Provisions in Area 2A

(1) The Regional Administrator, NMFS Northwest Region, after consultation with the Chairman of the Pacific Fishery Management Council, the Commission Executive Director, and the Fisheries Director(s) of the affected state(s), is authorized to modify regulations during the season after making the following determinations.

(a) The action is necessary to allow allocation objectives to be met.

(b) The action will not result in exceeding the catch limit for the area.

(c) If any of the sport fishery subareas north of Cape Falcon, OR, are not projected to use their respective quotas by September 30, NMFS may take inseason action to transfer any projected unused quota to a Washington sport subarea projected to have the fewest number of sport fishing days in the calendar year.

(2) Flexible inseason management provisions include, but are not limited to, the following:

(a) Modification of sport fishing periods;

(b) Modification of sport fishing bag limits;

(c) Modification of sport fishing size limits; and

(d) Modification of sport fishing days per calendar week.

(3) Notice procedures.

(a) Actions taken under this section will be published in the **Federal Register**.

(b) Actual notice of inseason management actions will be provided by a telephone hotline administered by the Northwest Region, NMFS, at 206–526–6667 or 800–662–9825 (May through September) and by U.S. Coast Guard broadcasts. These broadcasts are announced on Channel 16 VHF—FM and 2182 kHz at frequent intervals. The announcements designate the channel or frequency over which the notice to mariners will be immediately broadcast. Since provisions of these regulations may be altered by inseason actions, sport fishers should monitor either the telephone hotline or U.S. Coast Guard broadcasts for current information for the area in which they are fishing.

(4) Effective dates.

(a) Any action issued under this section is effective on the date specified in the publication or at the time that the action is filed for public inspection with the Office of the **Federal Register**, whichever is later.

(b) NMFS will invite public comment on any inseason action filed with the Office of the **Federal Register**. If the Regional Administrator determines, for good cause found pursuant to 5 U.S.C. 553(b)(B), that an inseason action must be filed without affording a prior opportunity for public comment, public comments will be received for a period of 15 days after publication of the action in the **Federal Register**.

(c) Any inseason action issued under this section will remain in effect until the stated expiration date or until rescinded, modified, or superseded. However, no inseason action has any effect beyond the end of the calendar year in which it is issued.

(5) Availability of data. The Regional Administrator will compile, in aggregate form, all data and other information relevant to the action being taken and will make them available for public review during normal office hours at the Northwest Regional Office, NMFS, Sustainable Fisheries Division, 7600 Sand Point Way NE, Seattle, WA.

26. Fishery Election in Area 2A

(1) A vessel that fishes in Area 2A may participate in only one of the following three fisheries in Area 2A:

(a) The sport fishery under Section 23;

(b) The commercial directed fishery for halibut during the fishing period(s) established in Section 8 and/or the incidental retention of halibut during the primary sablefish fishery described at 50 CFR 660.323(a)(2); or

(c) The incidental catch fishery during the salmon troll fishery as authorized in Section 8.

(2) No person shall fish for halibut in the sport fishery in Area 2A under Section 23 from a vessel that has been used during the same calendar year for commercial halibut fishing in Area 2A or that has been issued a permit for the same calendar year for the commercial halibut fishery in Area 2A.

(3) No person shall fish for halibut in the directed halibut fishery during the fishing periods established in Section 8 and/or retain halibut incidentally taken in the primary sablefish fishery in Area 2A from a vessel that has been used during the same calendar year for the incidental catch fishery during the salmon troll fishery as authorized in Section 8.

(4) No person shall fish for halibut in the directed commercial halibut fishery and/or retain halibut incidentally taken in the primary sablefish fishery in Area 2A from a vessel that, during the same calendar year, has been used in the sport halibut fishery in Area 2A or that is licensed for the sport charter halibut fishery in Area 2A.

(5) No person shall retain halibut in the salmon troll fishery in Area 2A as authorized under Section 8 taken on a vessel that, during the same calendar year, has been used in the sport halibut fishery in Area 2A, or that is licensed for the sport charter halibut fishery in Area 2A.

(6) No person shall retain halibut in the salmon troll fishery in Area 2A as authorized under Section 8 taken on a vessel that, during the same calendar year, has been used in the directed commercial fishery during the fishing periods established in Section 8 and/or retain halibut incidentally taken in the primary sablefish fishery for Area 2A or that is licensed to participate in these commercial fisheries during the fishing periods established in Section 8 in Area 2A.

27. Previous Regulations Superseded

These regulations shall supersede all previous regulations of the Commission, and these regulations shall be effective each succeeding year until superseded.

Classification

IPHC Regulations

Because approval by the Secretary of State of the IPHC regulations is a foreign affairs function, the notice-and-comment and delay-in-effective date requirements of the Administrative Procedure Act, 5 U.S.C. 553, do not apply to this notice of the effectiveness and content of the IPHC regulations, 5 U.S.C. 553(a)(1). Because prior notice and an opportunity for public comment are not required to be provided for these portions of this rule by 5 U.S.C. 553, or any other law, the analytical requirements of the Regulatory Flexibility Act, 5 U.S.C. 601 *et seq.*, are not applicable.

Catch Sharing Plan for Area 2A

An Environmental Assessment/Regulatory Impact Review was prepared on the proposed changes to the CSP. NMFS has determined that the proposed changes to the CSP and the management measures implementing the CSP contained in these regulations will not significantly affect the quality of the human environment, and the preparation of an environmental impact statement on the final action is not required by section 102(2)(C) of the National Environmental Policy Act or its implementing regulations. At the proposed rule stage, the Chief Counsel for Regulation, Department of Commerce, certified to the Chief Counsel for Advocacy of the Small Business Administration that this action will not have a significant economic impact on a substantial number of small entities. No comments were received on this certification. Consequently, no regulatory flexibility analysis has been prepared. The Assistant Administrator for Fisheries, NOAA, finds that it is contrary to the public interest to delay the effective date of this rule for 30 days. This rule must be made effective for the opening of the 2002 Pacific halibut fishing season on March 18, 2002. NOAA's implementation of changes to the CSP could not begin until after January 2002 when the IPHC passed its annual measures setting quotas for 2002.

This action has been determined to be not significant for purposes of E.O. 12866.

Authority: 16 U.S.C. 773–773k.

Dated: March 13, 2002.

Rebecca Lent,

Deputy Assistant Administrator for Regulatory Programs, National Marine Fisheries Service.

[FR Doc. 02–6567 Filed 3–15–02; 10:57 am]

BILLING CODE 3510–22–S

Proposed Rules

Federal Register
Vol. 67, No. 54
Wednesday, March 20, 2002

This section of the FEDERAL REGISTER contains notices to the public of the proposed issuance of rules and regulations. The purpose of these notices is to give interested persons an opportunity to participate in the rule making prior to the adoption of the final rules.

DEPARTMENT OF AGRICULTURE

Office of the Secretary

7 CFR Part 1

Procedures Relating to Awards Under the Equal Access to Justice Act

AGENCY: Office of the Secretary, USDA.

ACTION: Proposed rule.

SUMMARY: The U.S. Department of Agriculture (''USDA'') proposes to amend its regulations implementing the Equal Access to Justice Act (''EAJA''). The proposed amendments incorporate modifications enacted in the Small Business Regulatory Enforcement Fairness Act of 1996.

DATES: In order to be considered, comments should be submitted by May 20, 2002.

ADDRESSES: Comments should be directed to Barbara Good, Attorney Advisor, Room 3311 South Building, Office of the General Counsel, U.S. Department of Agriculture, 14th and Independence Avenue, SW., Washington, DC 20250–1400.

FOR FURTHER INFORMATION CONTACT: Barbara S. Good, Attorney Advisor, Room 3311 South Building, Office of the General Counsel, U.S. Department of Agriculture, 14th and Independence Avenue, SW, Washington, DC 20250–1415; telephone (202) 720–8045.

SUPPLEMENTARY INFORMATION: In the Small Business Regulatory Enforcement Fairness Act of 1996 (''SBREFA''), Pub. L. No. 104–121, Title II, Mar. 29, 1996, 100 Stat. 857 to 874, Congress amended EAJA in two significant respects with regard to administrative proceedings.

First, Congress amended 5 U.S.C. 504(a) by adding a new basis for recovery under EAJA. Under prior law, only a ''prevailing party'' other than the United States in an adversary adjudication before an agency was eligible for recovery of fees and expenses. 5 U.S.C. 504(a)(1). Pursuant to new paragraph (a)(4), a party to an adversary adjudication arising from an agency action to enforce the party's compliance with a statutory or regulatory requirement may be entitled to reimbursement of fees and expenses. In such enforcement cases, where the demand by the agency is ''substantially in excess'' of the decision of the adjudicative officer and is ''unreasonable'' when compared with such decision under the facts and circumstances of the case, the agency adjudicative officer is directed to award to an eligible party the fees and other expenses related to defending against the excessive demand. Award is qualified if the party has committed a willful violation of law or otherwise acted in bad faith, or special circumstances make an award unjust.

SBREFA further amended Section 504(b)(1) to add new subparagraph (F), which defines the term ''demand'' as ''the express demand of the agency which led to the adversary adjudication, but does not include a recitation by the agency of the maximum statutory penalty (i) in the administrative complaint, or (ii) elsewhere when accompanied by an express demand for a lesser amount.''

SBREFA also added, in 5 U.S.C. 504(b)(1)(B), a new category of applicants eligible for fees based on a claim of excessive demand. In addition to the other categories of eligible applicants, a small entity as defined in 5 U.S.C. 601 will be eligible for reimbursement with respect to a claim of excessive demand in a regulatory or statutory enforcement action.

The second major change, in 5 U.S.C. 504(b)(1)(A), increased from $75 per hour to $125 per hour the maximum rate for fees awardable. The qualifying language ''unless the agency determines by regulation that an increase in the cost of living or a special factor, such as the limited availability of qualified attorney or agents for the proceeding involved justifies a higher fee'' remains. Departmental rules at 7 CFR 1.186 currently implementing EAJA attorney fees set a cap of $75 per hour. It is appropriate to amend 7 CFR 1.186 to reflect the statutory increase to $125 per hour.

In view of these statutory changes, the Department is proposing conforming amendments to its regulations. In addition, the Department is making minor changes to modify obsolete provisions related to effective dates, and to correct minor errors, and to make minor stylistic changes.

The Department retains its stance concerning the applicability of EAJA to National Appeals Division proceedings as set forth in the preamble to the final rule for National Appeals Division rules of procedure at 64 FR 33367, June 23, 1999.

This proposed rule has been reviewed under Executive Order No. 12866 and has been determined that it is not a ''significant regulatory action'' since it will not have an annual effect on the economy of $100 million or more or adversely and materially affect a sector of the economy, productivity, competition, jobs, the environment, public health or safety, of State, local or tribal governments or communities. This proposed rule will not create any serious inconsistencies, or otherwise materially alter the budgetary impact of entitlements, grants, user fees, or loan programs, or the rights and obligations of recipients thereof, and does not raise novel legal or policy issues arising out of legal mandates, the President's priorities or principles set forth in E.O. 12866. Therefore, this proposed rule has not been reviewed by the Office of Management and Budget.

USDA certifies that this rule will not have a significant impact on a substantial number of small entities as defined in the Regulatory Flexibility Act, Pub. L. No. 96–534, as amended (5 U.S.C. 601 *et seq.*).

USDA has determined that the provisions of the Paperwork Reduction Act as amended, 44 U.S.C. chapter 35, do not apply to any collections of information contained in this rule because any such collections of information are made during the conduct of administrative action involving an agency against specific individuals or entities. 5 CFR 1320.4(a)(2).

List of Subjects in 7 CFR Part 1

Administrative practice and procedures.

Accordingly, 7 CFR, Subtitle A, Part 1, Subpart J is proposed to be revised to read as follows:

PART 1—[AMENDED]

Subpart J—Procedures Relating to Awards Under the Equal Access to Justice Act in Proceedings Before the Department

Authority: 5 U.S.C. 504(c)(1).

General Provisions

Sec.
1.180 Definitions.
1.181 Purpose of these rules.
1.182 When EAJA applies.
1.183 Proceedings covered.
1.184 Eligibility of applicants.
1.185 Standards for awards.
1.186 Allowable fees and expenses.
1.187 Rulemaking on maximum rates for attorney fees.
1.188 Awards against other agencies.
1.189 Delegations of authority.

Information Required From Applicants

1.190 Contents of application.
1.191 Net worth exhibit.
1.192 Documentation of fees and expenses.
1.193 Time for filing application.

Procedures for Considering Applications

1.194 Filing and service of documents.
1.195 Answer to application.
1.196 Reply.
1.197 Comments by other parties.
1.198 Settlement.
1.199 Further proceedings.
1.200 Decision.
1.201 Department review.
1.202 Judicial review.
1.203 Payment of award.

General Provisions

§ 1.180 Definitions.

(a) The definitions contained in § 1.132 of this part are incorporated into and made applicable to this subpart.

(b) *Adjudicative Officer* means an administrative law judge, administrative judge, or other person assigned to conduct a proceeding covered by EAJA.

(c) *Agency* means an organizational unit of the Department whose head reports to an official in the Office of the Secretary.

(d) *Agency* counsel means the attorney from the Office of the General Counsel representing the agency of the Department administering the statute involved in the proceeding.

(e) *Days* means calendar days.

(f) *Department* means the United States Department of Agriculture.

§ 1.181 Purpose of these rules.

The Equal Access to Justice Act, 5 U.S.C. 504 (called ''EAJA'' in this subpart), provides for the award of attorney fees and other expenses to eligible individuals and entities who are parties to certain administrative proceedings (called ''adversary adjudications'') before the Department. An eligible party may receive an award when it prevails over the Department unless the position of the Department was substantially justified or special circumstances make an award unjust. Alternatively, an eligible party may receive an award in connection with an adversary adjudication arising from an agency action to enforce the party's compliance with a statutory or regulatory requirement where the demand by the agency is substantially in excess of the decision of the adjudicative officer and is unreasonable when compared with such decision under the facts and circumstances of the case. The rules in this subpart describe the parties eligible for awards and the proceedings that are covered. They also explain how to apply for awards, and the procedures and standards that the Department will use to make awards.

§ 1.182 When EAJA applies.

EAJA applies to any adversary adjudication pending or commenced before the Department on or after August 5, 1985, except with respect to a proceeding covered under § 1.183(a)(1)(iii) of this part, which is effective on or after October 21, 1986. In addition, the provisions of § 1.185(b) relating to award for excessive demand apply only to adversary adjudications commenced on or after March 29, 1996. Changes in maximum rates for attorney fees are effective as of [the effective date of the final rule].

§ 1.183 Proceedings covered.

(a)(1) The rules in this subpart apply to adversary adjudications. These are:

(i) Adjudications required by statute to be conducted by the Department under 5 U.S.C. 554 in which the position of the Department or any other agency of the United States, or any component of an agency, is presented by an attorney or other representative who enters an appearance and participates in the proceeding,

(ii) Appeals of decisions of contracting officers made pursuant to section 6 of the Contract Disputes Act of 1978 (41 U.S.C. 605) before the Agriculture Board of Contract Appeals as provided in section 8 of that Act (41 U.S.C. 607), and

(iii) Any hearing conducted under chapter 38 of title 31, United States Code.

(2) Any proceeding in which the Department may prescribe a lawful present or future rate is not covered by EAJA. Proceedings to grant or renew licenses also are excluded, but proceedings to modify, suspend, or revoke licenses are covered if they are otherwise ''adversary adjudications.'' The proceedings covered include adversary adjudications under the following statutory provisions.

Agricultural Marketing Agreement Act of 1937 (7 U.S.C. 608c(15)(A))
Animal Quarantine Laws (21 U.S.C. 104, 117, 122, 127, 134e, and 135a)
Animal Welfare Act (7 U.S.C. 2149)
Archaeological Resources Protection Act (16 U.S.C. 470ff)
Beef Research and Information Act (7 U.S.C. 2912)
Capper-Volstead Act (7 U.S.C. 292)
Cotton Research and Promotion Act (7 U.S.C. 2111)
Egg Products Inspection Act (21 U.S.C. 1047)
Egg Research and Consumer Information Act (7 U.S.C. 2713, 2714(b))
Endangered Species Act (16 U.S.C. 1540(a))
Federal Land Policy and Management Act (43 U.S.C. 1766)
Federal Meat Inspection Act (21 U.S.C. 604, 606, 607(e), 608, 671)
Federal Seed Act (7 U.S.C. 1599)
Horse Protection Act (15 U.S.C. 1823(c), 1825)
Packers and Stockyards Act (7 U.S.C. 193, 204, 213, 218d, 221)
Perishable Agricultural Commodities Act (7 U.S.C. 499c(c), 499d(d), 499f(c), 499h(a), 499h(b), 499h(c), 499i, 499m(a))
Plant Protection Act (7 U.S.C. 2279e, 7734(b), 7736)
Potato Research and Promotion Act (7 U.S.C. 2620)
Poultry Products Inspection Act (21 U.S.C. 455, 456, 457(d), 467)
Swine Health Protection Act (7 U.S.C. 3804(b), 3805(a))
U.S. Cotton Standards Act (7 U.S.C. 51b, 53)
U.S. Grain Standards Act (7 U.S.C. 79(g)(3), 85, 86)
U.S. Warehouse Act (7 U.S.C. 246, 253)
Virus-Serum-Toxin Act (21 U.S.C. 156)
Wheat and Wheat Foods Research and Nutrition Education Act (7 U.S.C. 3409)

(b) The failure of the Department to identify a type of proceeding as an adversary adjudication shall not preclude the filing of an application by a party who believes the proceeding is covered by EAJA; whether the proceeding is covered will then be an issue for resolution in proceedings on the application.

(c) If a proceeding includes both matters covered by EAJA and matters specifically excluded from coverage, any award made will include only fees and expenses related to covered issues.

§ 1.184 Eligibility of applicants.

(a) To be eligible for an award of attorney fees and other expenses under EAJA, the applicant must meet one of the following conditions:

(1) The applicant must be a prevailing party to the adversary adjudication for which it seeks an award; or

(2) The applicant must be a party to an adversary adjudication arising from an agency action to enforce the party's

compliance with a statutory or regulatory requirement in which the demand by the agency was substantially in excess of the decision of the adjudicative officer and the demand is unreasonable when compared with such decision under the facts and circumstances of the case.

(b) In addition to the criteria set out in paragraph (a) of this section, a party seeking an award must be one of the following:

(1) An individual with a net worth of not more than $2 million;

(2) The sole owner of an unincorporated business who has a net worth of not more than $7 million, including both personal and business interests, and not more than 500 employees;

(3) A charitable or other tax-exempt organization described in section 501(c)(3) of the Internal Revenue Code (26 U.S.C. 501(c)(3)) with not more than 500 employees;

(4) A cooperative association as defined in section 15(a) of the Agricultural Marketing Act (2 U.S.C. 1141j(a)) with not more than 500 employees;

(5) Any other partnership, corporation, association, unit of local government, or organization with a net worth of not more than $7 million and nor more than 500 employees;

(6) For purposes only of paragraph (a)(2) of this section, a small entity as defined in 5 U.S.C. 601.

(c) For the purpose of eligibility, the net worth and number of employees of an applicant shall be determined as of the date the adversary adjudication was initiated: Provided, that for purposes of eligibility in proceedings covered by § 1.183(a)(1)(ii) of this part, the net worth and number of employees of an applicant shall be determined as of the date the applicant filed its appeal under 41 U.S.C. 606.

(d) In interpreting the criteria set forth in paragraph (b) of this section, the following apply:

(1) An applicant who owns an unincorporated business will be considered as an ''individual'' rather than a ''sole owner of an unincorporated business'' if the issues on which the applicant prevails are related primarily to personal interests rather than to business interests.

(2) The employees of an applicant include all persons who regularly perform services for remuneration for the applicant, under the applicant's direction and control. Part-time employees shall be included on a proportional basis.

(3) The net worth and number of employees of the applicant and all of its affiliates shall be aggregated to determine eligibility. Any individual, corporation, or other entity that directly or indirectly controls or owns a majority of the voting shares or other interest of the applicant, or any corporation or other entity of which the applicant directly or indirectly owns or controls a majority of the voting shares or other interest, will be considered an affiliate for purposes of this subpart, unless the adjudicative officer determines such treatment would be unjust and contrary to the purposes of EAJA in light of the actual relationship between the affiliated entities. In addition, the adjudicative officer may determine that financial relationships of the applicant other than those described in this paragraph constitute special circumstances that would make an award unjust.

(4) An applicant that participates in a proceeding primarily on behalf of one or more other person or entity that would be ineligible is not itself eligible for an award.

§ 1.185 Standards for awards.

(a) *Prevailing party.* (1) A prevailing applicant may receive an award for fees and expenses incurred in connection with a proceeding, or in a significant and discrete substantive portion of the proceeding, unless the position of the Department was substantially justified. The position of the Department includes, in addition to the position taken by the Department in the adversary adjudication, the action or failure to act by the Department upon which the adversary adjudication is based. The burden of proof that an award should not be made to an eligible prevailing applicant because the position of the Department was substantially justified is on the agency.

(2) An award to a prevailing applicant will be reduced or denied if the applicant has unduly or unreasonably protracted the proceeding or if special circumstances make the award sought unjust.

(b) *Excessive demand.* (1) If, in an adversary adjudication arising from an agency action to enforce a party's compliance with a statutory or regulatory requirement, the demand by the agency is substantially in excess of the decision of the adjudicative officer and is unreasonable when compared with such decision under the facts and circumstances of the case, the adjudicative officer shall award to the party the fees and other expenses related to defending against the excessive demand, unless the party has committed a willful violation of law or otherwise acted in bad faith, or special circumstances make an award unjust. Fees and expenses awarded under this paragraph shall be paid only as a consequence of appropriations provided in advance.

(2) ''Demand'' means the express demand of the agency which led to the adversary adjudication, but does not include a recitation by the agency of the maximum statutory penalty:

(i) In the administrative complaint, or

(ii) Elsewhere when accompanied by an express demand for a lesser amount.

§ 1.186 Allowable fees and expenses.

(a) Awards will be based on rates customarily charged by persons engaged in the business of acting as attorneys, agents, and expert witnesses, even if the services were made available without charge or at reduced rate to the applicant.

(b) No award for the fee of an attorney or agent under the rules in this subpart may exceed $125.00 per hour. No award to compensate an expert witness may exceed the highest rate at which the Department pays expert witnesses, which is set out at § 1.150 of this part. However, an award also may include the reasonable expenses of the attorney, agent, or witness as a separate item, if the attorney, agent, or witness ordinarily charges clients separately for such expenses.

(c) In determining the reasonableness of the fee sought for an attorney, agent, or expert witness, the adjudicative officer shall consider the following:

(1) If the attorney, agent or witness is in private practice, his or her customary fee for similar services, or if an employee of the applicant, the fully allocated cost of the services;

(2) The prevailing rate for similar services in the community in which the attorney, agent, or witness ordinarily performs services;

(3) The time actually spent in the representation of the applicant;

(4) The time reasonably spent in light of the difficulty or complexity of the issues in the proceeding; and

(5) Such other factors as may bear on the value of the services provided.

(d) The reasonable cost of any study, analysis, engineering report, test, project or similar matter prepared on behalf of a party may be awarded, to the extent that the charge for the service does not exceed the prevailing rate for similar services, and the study or other matter was necessary for preparation of the applicant's case.

§ 1.187 Rulemaking on maximum rates for attorney fees.

(a) If warranted by an increase in the cost of living or by special

circumstances (such as limited availability of attorneys qualified to handle certain types of proceedings), the Department may adopt regulations providing that attorney fees may be awarded at a rate higher than $125 per hour in some or all of the types of proceedings covered by this part. The Department will conduct any rulemaking proceedings for this purpose under the informal rulemaking procedures of the Administrative Procedure Act.

(b) Any person may file with the Department a petition for rulemaking to increase the maximum rate for attorney fees in accordance with § 1.28 of this part. The petition should identify the rate the petitioner believes the Department should establish and the types of proceedings in which the rate should be used. It also should explain fully the reasons why the higher rate is warranted. The Department will respond to the petition within 60 days after it is filed, by initiating a rulemaking proceeding, denying the petition, or taking other appropriate action.

§ 1.188 Awards against other agencies.

If an applicant is entitled to an award because it prevails over another agency of the United States that participates in a proceeding before the Department and takes a position that is not substantially justified, the award or an appropriate portion of the award shall be made against that agency.

§ 1.189 Delegations of authority.

The Secretary of Agriculture delegates to the Judicial Officer, except as otherwise delegated, authority to take final action on matters pertaining to EAJA in proceedings covered by the rules in this subpart. The Secretary by order or regulation may delegate authority to take final action on matters pertaining to EAJA in particular cases or categories of cases to other subordinate officials or bodies. With respect to proceedings covered under § 1.183(a)(1)(ii) of this part, the Board of Contract Appeals is authorized by statute (41 U.S.C. 607) to take final action.

Information Required From Applicants

§ 1.190 Contents of application.

(a) An application for an award of fees and expenses under EAJA shall identify the applicant and the proceeding for which an award is sought. Unless the applicant is an individual, the application shall state the number of employees of the applicant and describe briefly the type and purpose of its organization or business. The application shall also:

(1) Show that the applicant has prevailed and identify the position of the Department that the applicant alleges was not substantially justified and shall briefly state the basis for such allegation; or

(2) Show that the demand by the Department in the proceeding was substantially in excess of, and was unreasonable when compared with, the decision in the proceeding.

(b) The application also shall, as appropriate, include a declaration that the applicant is a small entity as defined in 5 U.S.C. 601 or a statement that the applicant's net worth does not exceed $2 million (if an individual) or $7 million (for all other applicants, including their affiliates). However, an applicant may omit this statement if:

(1) It attaches a copy of a ruling by the Internal Revenue Service that it qualifies as an organization described in section 501(c)(3) of the Internal Revenue Code (26 U.S.C. 501(c)(3)) or, in the case of a tax-exempt organization not required to obtain a ruling from the Internal Revenue Service on its exempt status, a statement that describes the basis for the applicant's belief that it qualifies under such section; or

(2) It states that it is a cooperative association as defined in section 15(a) of the Agricultural Marketing Act (12 U.S.C. 114j(a)).

(c) The application shall state the amount of fees and expenses for which an award is sought.

(d) The application also may include any other matters that the applicant wishes the Department to consider in determining whether, and in what amount, an award should be made.

(e) The application shall be signed by the applicant or an authorized officer or attorney of the applicant. It also shall contain or be accompanied by a written verification under oath or affirmation under penalty of perjury that the information provided in the application and all accompanying material is true and complete to the best of the signer's information and belief.

§ 1.191 Net worth exhibit.

(a) An applicant, except a qualified tax-exempt organization or cooperative association, must provide with its application a detailed exhibit showing the net worth of the applicant and any affiliates (as defined in § 1.184 of this part) when the proceeding was initiated. The exhibit may be in any form convenient to the applicant that provides full disclosure of the applicant's and its affiliates' assets and liabilities and is sufficient to determine whether the applicant qualifies under the standards in this subpart. The adjudicative officer may require an applicant to file additional information to determine its eligibility for an award.

(b) Ordinarily, the net worth exhibit will be included in the public record of the proceeding. However, an applicant that objects to public disclosure of information in any portion of the exhibit and believes there are legal grounds for withholding it from disclosure may submit that portion of the exhibit directly to the adjudicative officer in a sealed envelope labeled ''Confidential Financial Information,'' accompanied by a motion to withhold the information from public disclosure. The motion shall describe the information sought to be withheld and explain, in detail, why it falls within one or more of the specific exemptions from mandatory disclosure under the Freedom of Information Act, 5 U.S.C. 552(b) (1) through (9). The material in question shall be served on counsel representing the agency against which the applicant seeks an award, but need not be served on any other party to the proceeding. If the adjudicative officer finds that the information should not be withheld from disclosure, it shall be placed in the public record of the proceeding. Otherwise, any request to inspect or copy the exhibit shall be disposed of in accordance with the established procedures of the Department under the Freedom of Information Act (§§ 1.1 through 1.23 of this part).

§ 1.192 Documentation of fees and expenses.

(a) The application shall be accompanied by full documentation of the fees and expenses, including the cost of any study, analysis, engineering report, test, project, or similar matter, for which an award is sought.

(b) The documentation shall include an affidavit from any attorney, agent, or expert witness representing or appearing on behalf of the party, stating the actual time expended and the rate at which fees and other expenses were computed and describing the specific services performed.

(1) The affidavit shall state the services performed. In order to establish the hourly rate, the affidavit shall state the hourly rate which is billed and paid by the majority of clients during the relevant time periods.

(2) If no hourly rate is paid by the majority of clients because, for instance, the attorney or agent represents most clients on a contingency basis, the attorney or agent shall provide information about two attorneys or agents with similar experience, who

perform similar work, stating their hourly rate.

(c) The documentation also shall include a description of any expenses for which reimbursement is sought and a statement of the amounts paid and payable by the applicant or by any other person or entity for the services provided.

(d) The adjudicative officer may require the applicant to provide vouchers, receipts, or other substantiation for any fees or expenses claimed, pursuant to § 1.199 of this part.

§ 1.193 Time for filing application.

(a) An application may be filed whenever the applicant has prevailed in the proceeding or in a significant and discrete substantive portion of the proceeding, but in no case later than 30 days after final disposition of the proceeding by the Department.

(b) For the purposes of this subpart, final disposition means the date on which a decision or order disposing of the merits of the proceeding or any other complete resolution of the proceeding, such as a settlement or voluntary dismissal, become final and unappealable, both within the Department and to the courts.

(c) If review or reconsideration is sought or taken of a decision as to which an applicant believes it has prevailed, proceedings for the award of fees shall be stayed pending final disposition of the underlying controversy. When the United States appeals the underlying merits of an adversary adjudication to a court, no decision on an application for fees and other expenses in connection with that adversary adjudication shall be made until a final and unreviewable decision is rendered by the court on the appeal or until the underlying merits of the case have been finally determined pursuant to the appeal.

Procedures for Considering Applications

§ 1.194 Filing and service of documents.

Any application for an award or other pleading or document related to an application shall be filed and served on all parties to the proceeding in the same manner as other pleadings in the proceeding except as provided in § 1.191 of this part for confidential financial information. The provisions relating to filing, service, extensions of time, and computation of time contained in § 1.147 of this part are incorporated into and made applicable to this subpart, except that the statutory 30 day time limit on filing the application as set out in § 1.193 of this part may not be extended.

§ 1.195 Answer to application.

(a) Within 30 days after service of an application, agency counsel may file an answer. If agency counsel fails to timely answer or settle the application, the adjudicative officer, upon a satisfactory showing of entitlement by the applicant, may make an award for the applicant's allowable fees and expenses.

(b) If agency counsel and the applicant believe that the issues in the fee application can be settled, they may jointly file a statement of intent to negotiate a settlement. The filing of this statement shall extend the time for filing an answer for an additional 30 days, and further extensions may be granted by the adjudicative officer upon request by agency counsel and the applicant.

(c) The answer shall explain in detail any objections to the award requested and identify the facts relied on in support of agency counsel's position. If the answer is based on any alleged facts not already in the record of the proceeding, agency counsel shall include with the answer either supporting affidavits or a request for further proceedings under § 1.199 of this part.

§ 1.196 Reply.

Within 15 days after service of an answer, the applicant may file a reply. If the reply is based on any alleged facts not already in the record of the proceeding, the applicant shall include with the reply either supporting affidavits or a request for further proceedings under § 1.199 of this part.

§ 1.197 Comments by other parties.

Any party to a proceeding other than the applicant and agency counsel may file comments on an application within 30 days after it is served or on an answer within 15 days after it is served. A commenting party may not participate further in proceedings on the application, unless the adjudicative officer determines that the public interest requires such participation in order to permit full exploration of matters raised in the comments.

§ 1.198 Settlement.

The applicant and agency counsel may agree on a proposed settlement of the award before final action on the application, either in connection with a settlement of the underlying proceeding, or after the underlying proceeding has been concluded. If a prevailing party and agency counsel agree on a proposed settlement of an award before an application has been filed, the application shall be filed with the proposed settlement.

§ 1.199 Further proceedings.

(a) Ordinarily, the determination of an award will be made on the basis of the written record. However, on request of either the applicant or agency counsel, or on his or her own initiative, the adjudicative officer may order further proceedings, such as an informal conference, oral argument, additional written submissions or, as to issues other than substantial justification (such as the applicant's eligibility or substantiation of fees and expenses), pertinent discovery or an evidentiary hearing. Such further proceedings shall be held only when necessary for full and fair resolution of the issues arising from the application, and shall be conducted as promptly as possible. Whether the position of the Department was substantially justified shall be determined on the basis of the administrative record, as a whole, which is made in the adversary adjudication for which fees and other expenses are sought.

(b) A request that the adjudicative officer order further proceedings under this section shall identify specifically the information sought or the disputed issues, and shall explain specifically why the additional proceedings are necessary to resolve the issues.

(c) In the event that an evidentiary hearing is held, it shall be conducted pursuant to §§ 1.130 through 1.151 of this part, except that any hearing in a proceeding covered by § 1.183(a)(1)(ii) of this part shall be conducted pursuant to Rules 17 through 25 of the Board of Contract Appeals contained in § 24.21 of this title.

§ 1.200 Decision.

The adjudicative officer or Board of Contract Appeals shall issue an initial decision on the application as expeditiously as possible after completion of proceedings on the application. Whenever possible, the decision shall be made by the same administrative judge or panel that decided the contract appeal for which fees are sought. The decision shall include written findings and conclusions on the applicant's eligibility and status as a prevailing party, and an explanation of the reasons for any difference between the amount requested and the amount awarded. This decision also shall include, if at issue, findings on whether the position of the Department was substantially justified, whether the applicant unduly protracted the proceedings, or whether special circumstances make an award unjust. If the applicant has sought an award against more than one agency, the decision shall allocate responsibility for

payment of any award made among the agencies, and shall explain the reasons for the allocation made.

§ 1.201 Department review.

(a) Except with respect to a proceeding covered by § 1.183(a)(1)(ii) of this part either the applicant or agency counsel may seek review of the initial decision on the fee application, in accordance with the provisions of §§ 1.145(a) and 1.146(a) of this part or in accordance with any delegation made pursuant to § 1.189 of this part. If neither the applicant nor agency counsel seeks review, the initial decision on the fee application shall become a final decision of the Department 35 days after it is served upon the applicant. If review is taken, it will be in accord with the provisions of §§ 1.145(b) through (i) and 1.146(b) of this part, or

(b) With respect to a proceeding covered by § 1.183(a)(1)(ii) of this part, either party may seek reconsideration of the decision on the fee application in accordance with Rule 29 of the Board of Contract Appeals contained in § 24.21 of this title. In addition, either party may appeal a decision of the Board of Contract Appeals to the Court of Appeals for the Federal Circuit in accordance with 41 U.S.C. 607.

§ 1.202 Judicial review.

Judicial review of final agency decisions on awards may be sought as provided in 5 U.S.C. 504(c)(2).

§ 1.203 Payment of award.

An applicant seeking payment of an award shall submit to the head of the agency administering the statute involved in the proceeding a copy of the final decision of the Department granting the award, accompanied by a statement that the applicant will not seek review of the decision in the United States courts. The agency will pay the amount awarded to the applicant within 60 days, unless judicial review of the award or of the underlying decision of the adversary adjudication has been sought by the applicant or any other party to the proceeding.

Dated: February 25, 2002.

Ann M. Veneman,

Secretary of Agriculture.

[FR Doc. 02–6516 Filed 3–19–02; 8:45 am]

BILLING CODE 3410–14–P

DEPARTMENT OF TRANSPORTATION

Federal Aviation Administration

14 CFR Part 25

[Docket No. NM211; Notice No. 25–02–03–SC]

Special Conditions: Airbus Industrie, Model A340–500/–600 Airplanes; Ground Loads and Conditions for Center Landing Gear With Four Wheels and Braking Capability

AGENCY: Federal Aviation Administration (FAA), DOT.

ACTION: Notice of proposed special conditions.

SUMMARY: This action proposes special conditions for Airbus Industrie Model A340–500 and –600 airplanes. These airplanes will have a novel or unusual design feature when compared to the state of technology envisioned in the airworthiness standards for transport category airplanes. This design feature is associated with the landing gear, in the form of a four-wheeled center landing gear, installed under the fuselage, which functions like a main landing gear in all respects, including the ability to brake. The applicable airworthiness regulations do not contain adequate or appropriate safety standards for this design feature. These proposed special conditions contain the additional safety standards that the Administrator considers necessary to establish a level of safety equivalent to that established by the existing airworthiness standards.

DATES: Comments must be received on or before April 19, 2002.

ADDRESSES: Comments on this proposal may be mailed in duplicate to: Federal Aviation Administration, Transport Airplane Directorate, Attn: Rules Docket (ANM–113), Docket No. NM211, 1601 Lind Avenue SW., Renton, Washington, 98055–4056; or delivered in duplicate to the Transport Airplane Directorate at the above address. Comments must be marked: Docket No. NM211. Comments may be inspected in the Rules Docket weekdays, except Federal holidays, between 7:30 a.m. and 4 p.m.

FOR FURTHER INFORMATION CONTACT: Tim Backman, FAA, ANM–116, Transport Airplane Directorate, Aircraft Certification Service, 1601 Lind Avenue SW., Renton, Washington, 98055–4056; telephone (425) 227–2797; facsimile (425) 227–1149.

SUPPLEMENTARY INFORMATION:

Comments Invited

The FAA invites interested persons to participate in this rulemaking by submitting written comments, data, or views. The most helpful comments reference a specific portion of the proposal, explain the reason for any recommended change, and include supporting data. We ask that you send us two copies of written comments.

We will file in the docket all comments we receive, as well as a report summarizing each substantive public contact with FAA personnel concerning these proposed special conditions. The docket is available for public inspection before and after the comment closing date. If you wish to review the docket in person, go to the address in the **ADDRESSES** section of this preamble between 7:30 a.m. and 4 p.m., Monday through Friday, except Federal holidays.

We will consider all comments we receive on or before the closing date for comments. We will consider comments filed late if it is possible to do so without incurring expense or delay. We may change this proposal for special conditions in light of the comments we receive.

If you want the FAA to acknowledge receipt of your comments on this proposal, include with your comments a pre-addressed, stamped postcard on which the docket number appears. We will stamp the date on the postcard and mail it back to you.

Background

On November 14, 1996, Airbus Industrie applied for an amendment to U.S. type certificate (TC) A43NM to include the new models A340–500 and –600. These models are derivatives of the A340–300, which is approved under the same TC.

The Model A340–500 fuselage is a 6-frame stretch of the Model A340–300 and is powered by 4 Rolls Royce Trent 553 engines, each rated at 53,000 pounds of thrust. The airplane has interior seating arrangements for up to 375 passengers, with a maximum takeoff weight (MTOW) of 820,000 pounds. The Model 340–500 is intended for long-range operations and has additional fuel capacity over that of the model A340–600.

The Model A340–600 fuselage is a 20-frame stretch of the Model A340–300 and is powered by 4 Rolls Royce Trent 556 engines, each rated at 56,000 pounds of thrust. The airplane has interior seating arrangements for up to 440 passengers, with a MTOW of 804,500 pounds.

Type Certification Basis

Under the provisions of 14 CFR 21.101, Airbus Industrie must show that the Model A340–500 and –600 airplanes

meet the applicable provisions of the regulations incorporated by reference in TC A43NM or the applicable regulations in effect on the date of application for the change to the type certificate. The regulations incorporated by reference in the type certificate are commonly referred to as the ''original type certification basis.'' The regulations incorporated by reference in TC A43NM are 14 CFR part 25, effective February 1, 1965, including Amendments 25–1 through 25–63, and Amendments 25–64, 25–65, 25–66, and 25–77, with certain exceptions that are not relevant to these proposed special conditions.

In addition, if the regulations incorporated by reference do not provide adequate standards with respect to the change, the applicant must comply with certain regulations in effect on the date of application for the change. The FAA has determined that the Model A340–500 and –600 airplanes must be shown to comply with Amendments 25–1 through 25–91 to part 25, with certain FAA-allowed reversions for specific part 25 regulations to the part 25 amendment levels of the original type certification basis.

Airbus has also chosen to comply with part 25 as amended by Amendments 25–92, –93, –94, –95, –97, –98, and –104.

If the Administrator finds that the applicable airworthiness regulations (i.e., part 25 as amended) do not contain adequate or appropriate safety standards for the Airbus Industrie Model A340–500 and –600 because of a novel or unusual design feature, special conditions are prescribed under the provisions of 14 CFR 21.16.

In addition to the applicable airworthiness regulations and special conditions, the Airbus Industrie Model A340–500 and –600 must comply with the fuel vent and exhaust emission requirements of 14 CFR part 34 and the noise certification requirements of 14 CFR part 36.

Special conditions, as defined in 14 CFR 11.19, are issued in accordance with § 11.38 and become part of the type certification basis in accordance with § 21.101(b)(2).

Special conditions are initially applicable to the model for which they are issued. Should the type certificate for that model be amended later to include any other model that incorporates the same novel or unusual design feature, or should any other model already included on the same type certificate be modified to incorporate the same novel or unusual design feature, the special conditions would also apply to the other model under the provisions of § 21.101(a)(1).

Novel or Unusual Design Features

The Airbus Models A340–500 and –600 will incorporate the following novel or unusual design feature: a four-wheel center landing gear with braking ability.

Discussion

The basic A340 included a two-wheel center landing gear which did not have brakes. The purpose of the center landing gear was to assist the main landing gear during ground handling conditions for heavy airplane weights. This center landing gear was not intended for energy absorption during landing, even if it could participate in the impact under certain conditions. Therefore, to provide additional taxi, takeoff, and landing criteria for this arrangement, Special Conditions 25–ANM–69 was issued.

The Model A340–500 and –600 airplanes have a four-wheel center landing gear which functions in all respects like a main landing gear, including braking capabilities. Because the speeds and weights of the Models A340–500 and –600 are greater than that of the basic A340, redesign of the center landing gear was necessary. As a result, the current rules, applying to the original two-wheel center landing gear, are inadequate.

Applicability

As discussed above, these special conditions are applicable to the Airbus Models A340–500 and –600. Should Airbus Industries apply at a later date for a change to the type certificate to include another model incorporating the same novel or unusual design feature, the special conditions would apply to that model as well under the provisions of § 21.101(a)(1).

Conclusion

This action affects only certain novel or unusual design features of the center landing gear on the Model A340–500 and A340–600 airplanes. It is not a rule of general applicability, and it affects only the applicant who applied to the FAA for approval of these features on the airplane.

List of Subjects in 14 CFR Part 25

Aircraft, Aviation safety, Reporting and recordkeeping requirements.

The authority citation for these special conditions is as follows:

Authority: 49 U.S.C. 106(g), 40113, 44701, 44702, 44704.

The Proposed Special Conditions

Accordingly, the Federal Aviation Administration (FAA) proposes the following special conditions as part of the type certification basis for Airbus Model A340–500 and A340–600 airplanes.

The following special conditions are proposed in lieu of the previously issued special conditions, ''Ground Load Conditions for Center Landing Gear,'' recorded as item 10 of Special Conditions: Airbus Industrie Model A340 Series Airplanes [Docket No. NM–75, Special Conditions No. 25–ANM–69]:

1. *Ground Load Conditions for Center Landing Gear.* Notwithstanding § 25.477, the requirements of § 25.473 and §§ 25.479 through 25.485 apply, except as noted:

(a) In addition to the requirements of § 25.473, ''Landing load conditions and assumptions,'' and § 25.479, ''Level landing conditions,'' landing should be considered on a level runway and on a runway having a convex upward shape that may be approximated by a slope of 1.5 percent at main landing gear stations. The maximum loads determined from these two conditions must be applied to each main landing gear and to the center landing gear.

(b) In addition to the requirements of § 25.483, ''One gear landing conditions,'' the condition represented by Figure 1 also applies:

BILLING CODE 4910–13–P

Figure 1. Center gear landing Condition

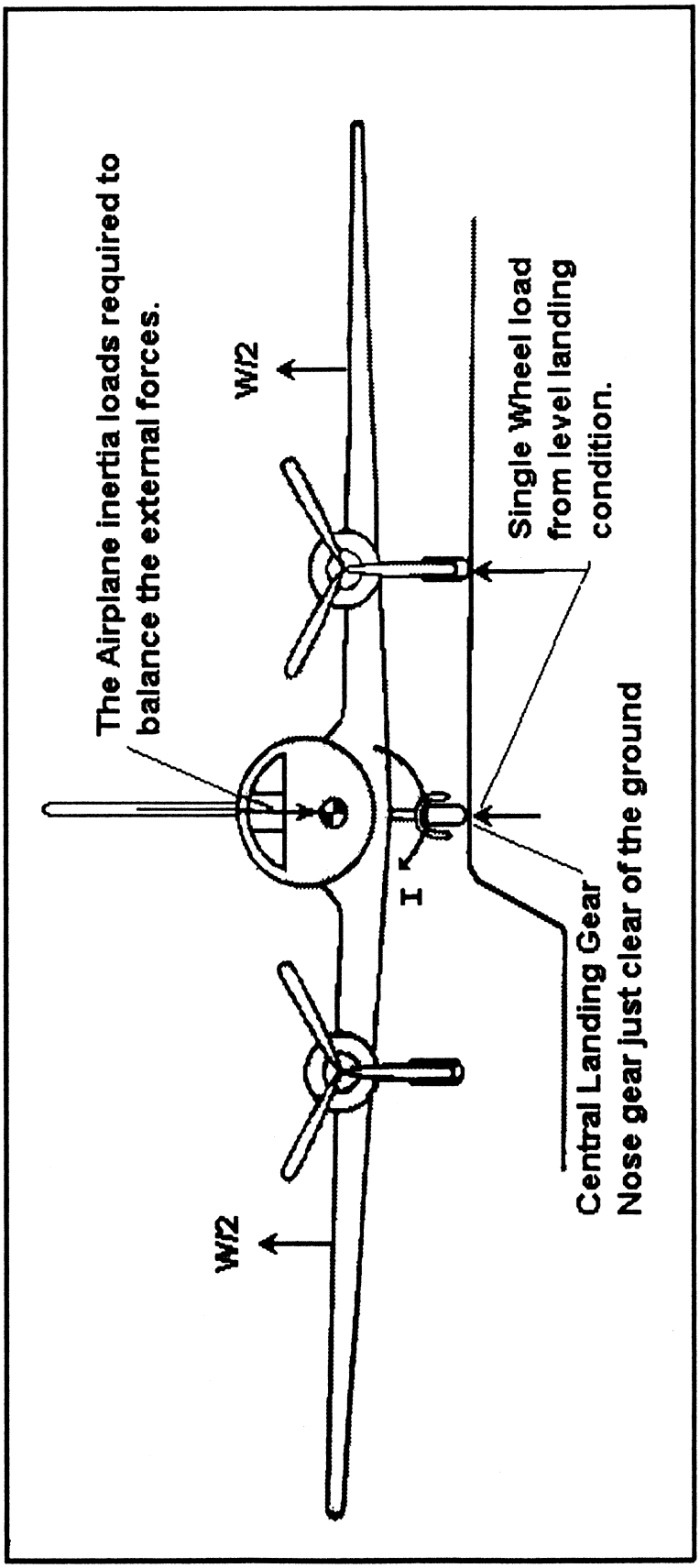

BILLING CODE 4910–13–P

(c) In lieu of the requirements of § 25.485, ''Side load conditions,'' the following apply:

(1) The airplane is considered to be in the level attitude with only the main and center wheels contacting the ground.

(2) Vertical reactions of one-half of the maximum vertical reaction obtained at each main and center gear in the level landing conditions should be considered. The vertical loads must be combined with side loads as follows: for the main gear, 0.8 of the vertical reaction (on one side) acting inward and 0.6 of the vertical reaction (on the other side) acting outward; for the center gear, 0.7 of the vertical reaction acting in the same direction as main gear side loads. These loads are assumed to be applied at the ground contact point and to be resisted by the inertia of the airplane. The drag loads may be assumed to be zero.

(d) In addition to § 25.489, ''Ground handling conditions,'' the airplane should be considered to be on a level runway and on a runway having a convex upward shape that may be approximated by a slope of 1.5 percent at main landing gear stations. The ground reactions must be distributed to the individual landing gear units in a rational or conservative manner.

(e) In addition to the requirements of § 25.493(d), ''Braked roll conditions,'' the sudden application of maximum braking effort must be defined taking into account the behavior of the braking system. Failure conditions of the braking system not shown to be extremely improbable must be analyzed in accordance with the following criteria:

(1) At the time of occurrence. A realistic scenario, including pilot corrective actions, must be established to determine the loads occurring at the time of failure and immediately after failure.

(i) For static strength substantiation, these loads multiplied by an appropriate factor of safety that is related to the probability of occurrence of the failure are ultimate loads to be considered for design. The factor of safety (F.S.) is defined in Figure 2.

Figure 2

Factor of safety at the time of occurrence

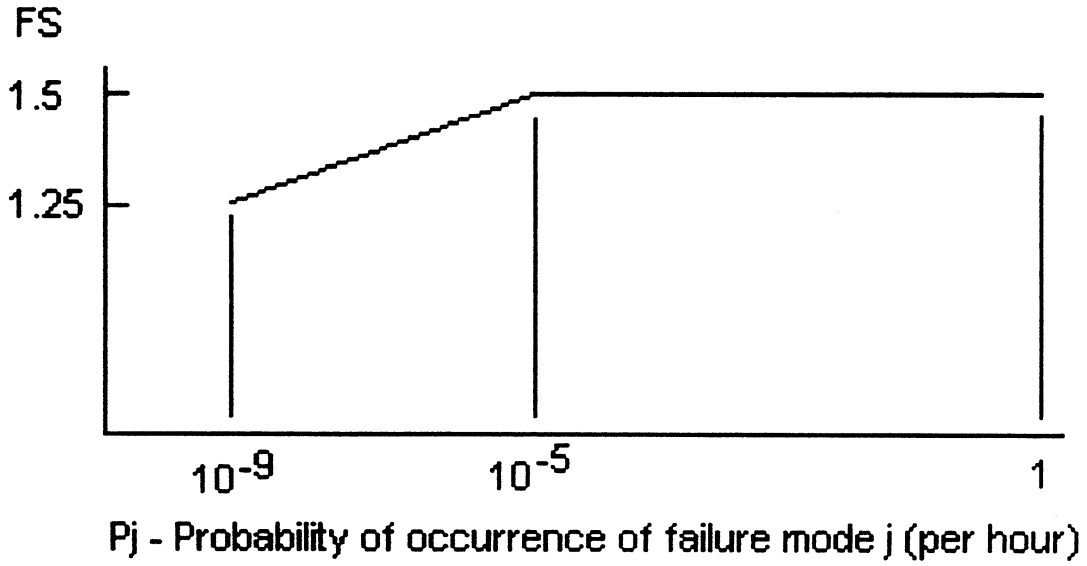

(ii) For residual strength substantiation, the airplane must be able to withstand two thirds of the ultimate loads defined in paragraph (e)(1)(i).

(iii) Failures of the system that result in forced structural vibrations (oscillatory failures) must not produce loads that could result in detrimental deformation of primary structure.

(2) Consideration of certain failure conditions may be required by other sections of part 25, regardless of calculated system reliability. Where analysis shows the probability of these failure conditions to be less than 10^{-9}, criteria other than those specified in this paragraph may be used for structural substantiation to show continued safe flight and landing.

(3) Warning considerations. For system failure detection and warning, the system must be checked for failure conditions, not extremely improbable, that degrade the structural capability below the level required by part 25 or significantly reduce the reliability of the remaining system. The flightcrew must be made aware of these failures before flight. Certain elements of the control system, such as mechanical and hydraulic components, may use special periodic inspections, and electronic components may use daily checks, in lieu of warning systems to achieve the objective of this requirement. These certification maintenance requirements must be limited to components that are not readily detectable by normal warning systems and where service history shows that inspections will provide an adequate level of safety.

(4) Dispatch with known failure conditions. If the airplane is to be dispatched in a known system failure condition that affects structural

performance, or affects the reliability of the remaining system to maintain structural performance, then the provisions of these special conditions must be met for the dispatched condition and for subsequent failures. Flight limitations and expected operational limitations may be taken into account in establishing Qj as the combined probability of being in the dispatched failure condition and the subsequent failure condition for the safety margins in Figure 3. These limitations must be such that the probability of being in this combined failure state and then subsequently encountering limit load conditions is extremely improbable. No reduction in these safety margins is allowed if the subsequent system failure rate is greater than 10^{-3} per hour.''

Figure 3

Factor of safety for continuation of flight

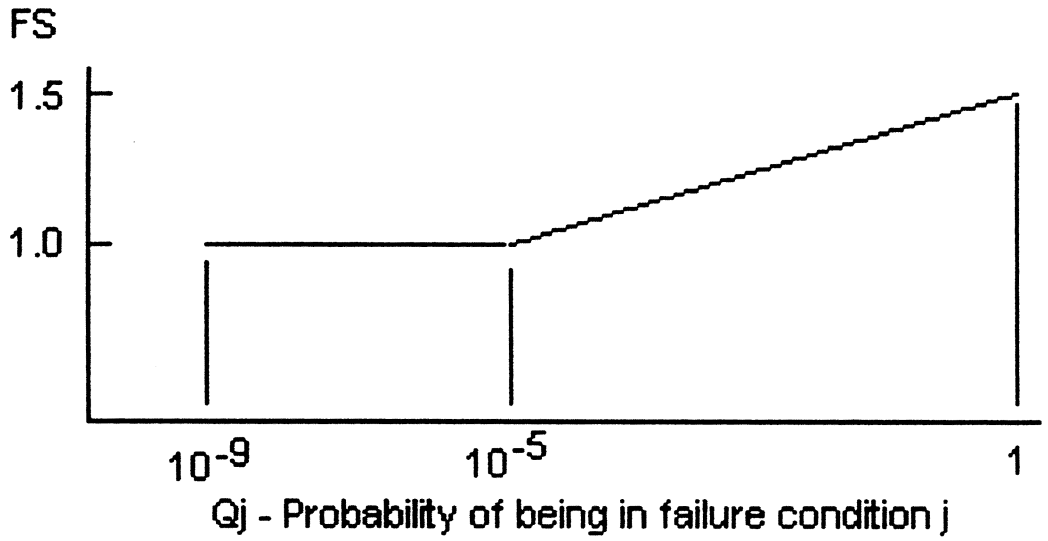

$Q_j = (T_j)(P_j)$ where:

T_j = Average time spent in failure condition j (in hours).

P_j = Probability of occurrence of failure mode j (per hour).

(f) In lieu of the requirements of § 25.495, ''Turning,'' the following apply:

(1) The airplane is assumed to execute a steady turn by nose gear steering, or by application of sufficient differential power, so that the limit load factors applied at the center of gravity are 1.0 vertically and 0.5 laterally.

(2) The airplane must be designed for the condition prescribed in paragraph (f)(1), taking into account:

(i) The effects of tire characteristics on the sharing of lateral loads on each tire of the landing gear system, and

(ii) The effect of airframe and landing gear flexibility on the sharing of loads on the different legs of the landing gear system.

(g) In lieu of the requirements of § 25.503, ''Pivoting,'' the following apply:

(1) The main and center gear units and supporting structure must be designed for the scrubbing or torsion loads, or both, induced by pivoting during ground maneuvers produced by:

(i) Towing at the nose gear, no brakes applied, and

(ii) Application of symmetrical or unsymmetrical forward thrust to aid pivoting and with or without braking by pilot action on the pedals.

(2) The airplane is assumed to be in static equilibrium, with the loads being applied at the ground contact points.

(3) The limit vertical load factor must be 1.0, and:

(i) For wheels with locked brakes applied by pilot action on the pedals, the coefficient of friction must be 0.8.

(ii) For wheels with brakes not applied, the ground tire reactions must be based on reliable tire data.

(4) The failure conditions must be analyzed in accordance with paragraph (e) of these Special Conditions.

(h) In lieu of paragraph (b) of § 25.723 ''Shock absorption tests,'' the center landing gear should not fail in a test demonstrating its reserve energy absorption capacity at design landing weight, assuming airplane lift no greater than the airplane weight acting during a 12-feet-per-second airplane landing impact, taking into account both main and center gear acting during the impact. Landing should be considered on a level runway or a runway having a convex upward shape that may be approximated by a slope of 1.5 percent with the horizontal at main landing gear stations, whichever is the most critical.

Issued in Renton, Washington, on February 28, 2002.

Vi L. Lipski,

Manager, Transport Airplane Directorate, Aircraft Certification Service.

[FR Doc. 02–5876 Filed 3–19–02; 8:45 am]

BILLING CODE 4910–13–P

DEPARTMENT OF TRANSPORTATION

Federal Aviation Administration

14 CFR Part 39

[Docket No. 2000–NM–307–AD]

RIN 2120–AA64

Airworthiness Directives; Bombardier Model DHC–8–100, –200, and –300 Series Airplanes

AGENCY: Federal Aviation Administration, DOT.

ACTION: Notice of proposed rulemaking (NPRM).

SUMMARY: This document proposes the adoption of a new airworthiness directive (AD) that is applicable to certain Bombardier Model DHC–8–100, –200, and –300 series airplanes. This proposal would require various modifications of the airstair (main passenger) door. This action is necessary to prevent failure of the airstair door to open after a landing, which could result in a blocked escape route during an emergency evacuation. This action is intended to address the identified unsafe condition.

DATES: Comments must be received by April 19, 2002.

ADDRESSES: Submit comments in triplicate to the Federal Aviation Administration (FAA), Transport Airplane Directorate, ANM–114, Attention: Rules Docket No. 2000–NM–307–AD, 1601 Lind Avenue, SW., Renton, Washington 98055–4056. Comments may be inspected at this location between 9:00 a.m. and 3:00 p.m., Monday through Friday, except Federal holidays. Comments may be submitted via fax to (425) 227–1232. Comments may also be sent via the Internet using the following address: *9-anm-nprmcomment@faa.gov.* Comments sent via fax or the Internet must contain ''Docket No. 2000–NM–307–AD'' in the subject line and need not be submitted in triplicate. Comments sent via the Internet as attached electronic files must be formatted in Microsoft Word 97 for Windows or ASCII text.

The service information referenced in the proposed rule may be obtained from Bombardier, Inc., Bombardier Regional Aircraft Division, 123 Garratt Boulevard, Downsview, Ontario M3K 1Y5, Canada. This information may be examined at the FAA, Transport Airplane Directorate, 1601 Lind Avenue, SW., Renton, Washington; or at the FAA, New York Aircraft Certification Office, 10 Fifth Street, Third Floor, Valley Stream, New York.

FOR FURTHER INFORMATION CONTACT: Dan Parrillo, Aerospace Engineer, Systems and Flight Test Branch, ANE–172, FAA, New York Aircraft Certification Office, 10 Fifth Street, Third Floor, Valley Stream, New York 11581; telephone (516) 256–7505; fax (516) 568–2716.

SUPPLEMENTARY INFORMATION:

Comments Invited

Interested persons are invited to participate in the making of the proposed rule by submitting such written data, views, or arguments as they may desire. Communications shall identify the Rules Docket number and be submitted in triplicate to the address specified above. All communications received on or before the closing date for comments, specified above, will be considered before taking action on the proposed rule. The proposals contained in this action may be changed in light of the comments received.

Submit comments using the following format:

- Organize comments issue-by-issue. For example, discuss a request to change the compliance time and a request to change the service bulletin reference as two separate issues.
- For each issue, state what specific change to the proposed AD is being requested.
- Include justification (*e.g.,* reasons or data) for each request.

Comments are specifically invited on the overall regulatory, economic, environmental, and energy aspects of the proposed rule. All comments submitted will be available, both before and after the closing date for comments, in the Rules Docket for examination by interested persons. A report summarizing each FAA-public contact concerned with the substance of this proposal will be filed in the Rules Docket.

Commenters wishing the FAA to acknowledge receipt of their comments submitted in response to this action must submit a self-addressed, stamped postcard on which the following statement is made: ''Comments to Docket 2000–NM–307–AD.'' The postcard will be date-stamped and returned to the commenter.

Availability of NPRMs

Any person may obtain a copy of this NPRM by submitting a request to the FAA, Transport Airplane Directorate, ANM–114, Attention: Rules Docket 2000–NM–307–AD, 1601 Lind Avenue, SW., Renton, Washington 98055–4056.

Discussion

Transport Canada Civil Aviation (TCCA), which is the airworthiness authority for Canada, notified the FAA that an unsafe condition may exist on certain Bombardier Model DHC–8–100, –200, and –300 series airplanes. TCCA has received numerous reports of malfunctioning airstair (main passenger) doors on affected airplanes. During these malfunctions, crewmembers had difficulty opening or closing the door, or were completely unable to open the door from inside or outside. The airstair door is a ''Type I'' exit, which is essential for evacuation during an emergency. Causes of a failed airstair door include a malfunctioning inflation valve used for the door seal, bending of the gas springs (gas struts), and jamming and/or breaking of the door balance cable. Failure of the airstair door to open after a landing, if not corrected, could result in a blocked escape route during an emergency evacuation.

Explanation of Relevant Service Information

Bombardier has issued the service bulletins described in the following table:

Procedures for—	Are described in Service Bulletin—	Revision level—	Dated—
Replacing the inflation valve with a new valve of an improved design..	8–52–46	Original	September 30, 1998.
Reworking the airstair door cable balance assembly	8–52–38	Original	October 10, 1995.
		'A'	September 19, 1997.
Modifying the cable guard system by replacing the upper cable guards with new, improved cable guards.	8–52–57	Original	February 23, 2000.
		'A'	July 28, 2000.
		'B'	November 14, 2000.

Procedures for—	Are described in Service Bulletin—	Revision level—	Dated—
Modifying the airstair balance system by manufacturing and installing a support bracket assembly.	8–52–56	'C'	March 10, 2000.
		'D'	May 18, 2000.
		'E'	July 20, 2000.
		'F'	August 29, 2000.
		'G'	November 7, 2000.
Replacing the airstair door gas springs with new gas springs.	8–52–59	Original	September 18, 2000.
		'A'	January 3, 2001.

Accomplishment of the actions specified in the service bulletins is intended to adequately address the identified unsafe condition. TCCA classified Service Bulletins 8–52–46, 8–52–38, and 8–52–57 as mandatory; mandated accomplishment of either Service Bulletin 8–52–56 or 8–52–59 (and allowed accomplishment of both); and issued Canadian airworthiness directive CF–2000–19R1, dated January 22, 2001, to ensure the continued airworthiness of these airplanes in Canada.

FAA's Conclusions

These airplane models are manufactured in Canada and are type certificated for operation in the United States under the provisions of section 21.29 of the Federal Aviation Regulations (14 CFR 21.29) and the applicable bilateral airworthiness agreement. Pursuant to this bilateral airworthiness agreement, TCCA has kept the FAA informed of the situation described above. The FAA has examined the findings of TCCA, reviewed all available information, and determined that AD action is necessary for products of this type design that are certificated for operation in the United States.

Explanation of Requirements of Proposed Rule

Since an unsafe condition has been identified that is likely to exist or develop on other airplanes of the same type design registered in the United States, the proposed AD would require accomplishment of the actions specified in the service bulletins described previously.

Cost Impact

The FAA provides the following cost estimates for the actions specified by this proposed AD:

Action per Service Bulletin	Workhours per airplane	Labor rate per hour	Parts cost per airplane	Number of U.S. airplanes affected	Per-airplane cost	Fleet cost
8–52–46	3	$60	$297	194	$477	$92,538
8–52–38	4	60	1,930	130	2,170	282,100
8–52–57	1	60	0	194	60	11,640
8–52–56	4	60	0	194	240	46,560
8–52–59	3	60	0	194	180	34,920

The cost impact figures discussed above are based on assumptions that no operator has yet accomplished any of the proposed requirements of this AD action, and that no operator would accomplish those actions in the future if this proposed AD were not adopted. The cost impact figures discussed in AD rulemaking actions represent only the time necessary to perform the specific actions actually required by the AD. These figures typically do not include incidental costs, such as the time required to gain access and close up, planning time, or time necessitated by other administrative actions.

Regulatory Impact

The regulations proposed herein would not have a substantial direct effect on the States, on the relationship between the national Government and the States, or on the distribution of power and responsibilities among the various levels of government. Therefore, it is determined that this proposal would not have federalism implications under Executive Order 13132.

For the reasons discussed above, I certify that this proposed regulation (1) is not a ''significant regulatory action'' under Executive Order 12866; (2) is not a ''significant rule'' under the DOT Regulatory Policies and Procedures (44 FR 11034, February 26, 1979); and (3) if promulgated, will not have a significant economic impact, positive or negative, on a substantial number of small entities under the criteria of the Regulatory Flexibility Act. A copy of the draft regulatory evaluation prepared for this action is contained in the Rules Docket. A copy of it may be obtained by contacting the Rules Docket at the location provided under the caption **ADDRESSES**.

List of Subjects in 14 CFR Part 39

Air transportation, Aircraft, Aviation safety, Safety.

The Proposed Amendment

Accordingly, pursuant to the authority delegated to me by the Administrator, the Federal Aviation Administration proposes to amend part 39 of the Federal Aviation Regulations (14 CFR part 39) as follows:

PART 39—AIRWORTHINESS DIRECTIVES

1. The authority citation for part 39 continues to read as follows:

Authority: 49 U.S.C. 106(g), 40113, 44701.

§ 39.13 [Amended]

2. Section 39.13 is amended by adding the following new airworthiness directive:

Bombardier, Inc. (Formerly de Havilland, Inc.): Docket 2000–NM–307–AD.

Applicability: Model DHC–8–100, –200, and –300 series airplanes; certificated in any category; serial numbers 003 through 550 inclusive.

Note 1: This AD applies to each airplane identified in the preceding applicability provision, regardless of whether it has been

modified, altered, or repaired in the area subject to the requirements of this AD. For airplanes that have been modified, altered, or repaired so that the performance of the requirements of this AD is affected, the owner/operator must request approval for an alternative method of compliance in accordance with paragraph (b) of this AD. The request should include an assessment of the effect of the modification, alteration, or repair on the unsafe condition addressed by this AD; and, if the unsafe condition has not been eliminated, the request should include specific proposed actions to address it.

Compliance: Required as indicated, unless accomplished previously.

To prevent failure of the airstair door to open after a landing, which could result in a blocked escape route during an emergency evacuation, accomplish the following:

Modifications

(a) Modify the airplane as specified by the following table:

TABLE—MODIFICATION REQUIREMENTS

For Model—	Modify the airstair door by—	Within—	In accordance with the Accomplishment Instructions of Bombardier Service Bulletin—
(1) DHC–8–102, −103, −106, −201, 202, 301, −311, and −315 series airplanes; serial numbers 003 through 522 inclusive.	Replacing the inflation valve with a new valve of an improved design (Modsum 8Q100185).	6 months after the effective date of this AD.	8–52–46, dated September 30, 1998.
(2) DHC–8–102, −103, −106, −301, −311, and −315 series airplanes; serial numbers 003 through 400 inclusive.	Reworking the airstair door cable balance assembly (Modsum 8/2205).	6 months after the effective date of this AD.	8–52–38, dated October 10, 1995; or 8–52–38, Revision 'A,' dated September 19, 1997.
(3) DHC–8–102, −103, −106, −201, −202, −301, 311, and −315 series airplanes; serial numbers 003 through 550 inclusive.	Replacing the upper cable guards on the airstair door with new, improved cable guards (Modsum 8Q101093).	6 months after the effective date of this AD, but after the modification required by paragraph (a)(2) of this AD.	8–52–57, dated February 23, 2000; or 8–52–58, Revision 'A,' dated July 28, 2000; or 8–52–57, Revision 'B,' dated November 14, 2000.
(4) DHC–8–102, 103, 106, 201, 202, 301, 311, and 315 series airplanes; serial numbers 003 through 550 inclusive.	(i) Manufacturing and installing a support bracket assembly (Modsum 8Q101086); and/or.	6 months after the effective date of this AD.	8–52–56, Revision 'C,' dated March 10, 2000; or 8–52–56, Revision 'D,' dated May 18, 2000; or 8–52–56, Revision 'E,' dated July 20, 2000; or 8–52–56, Revision 'F,' dated August 29, 2000; or 8–52–56, Revision 'G,' dated November 7, 2000.
	(ii) Replacing the airstair door gas springs with new gas springs (Modsum 8Q101074).	6 months after the effective date of this AD.	8–52–59; dated September 18, 2000; or 8–52–59; Revision 'A,' dated January 3, 2001.

Note 2: Modsum 8Q101093 (paragraph (a)(3) of this AD) cannot be accomplished before Modification 8/2205 (paragraph (a)(2) of this AD), because Modsum 8Q101093 introduces a redesigned cable guard that replaces a cable guard that is part of Modification 8/2205.

Note 3: Modification as specified by either paragraph (a)(4)(i) or (a)(4)(ii)—or both—of this AD is acceptable for compliance with the requirements of paragraph (a)(4) of this AD.

Alternative Methods of Compliance

(b) An alternative method of compliance or adjustment of the compliance time that provides an acceptable level of safety may be used if approved by the Manager, New York Aircraft Certification Office (ACO), FAA. Operators shall submit their requests through an appropriate FAA Principal Maintenance Inspector, who may add comments and then send it to the Manager, New York ACO.

Note 4: Information concerning the existence of approved alternative methods of compliance with this AD, if any, may be obtained from the New York ACO.

Special Flight Permits

(c) Special flight permits may be issued in accordance with sections 21.197 and 21.199 of the Federal Aviation Regulations (14 CFR 21.197 and 21.199) to operate the airplane to a location where the requirements of this AD can be accomplished.

Note 5: The subject of this AD is addressed in Canadian airworthiness directive CF–2000–19R1, dated January 22, 2001.

Issued in Renton, Washington, on March 13, 2002.

Ali Bahrami,

Acting Manager, Transport Airplane Directorate, Aircraft Certification Service.

[FR Doc. 02–6630 Filed 3–19–02; 8:45 am]

BILLING CODE 4910–13–P

DEPARTMENT OF TRANSPORTATION

Federal Aviation Administration

14 CFR Part 39

[Docket No. 2000–CE–14–AD]

RIN 2120–AA64

Airworthiness Directives; Rockwell Collins, Inc. ADC–85, ADC–85A, ADC–850D, and ADC–850F Air Data Computers

AGENCY: Federal Aviation Administration, DOT.

ACTION: Supplemental notice of proposed rulemaking (NPRM); Reopening of the comment period.

SUMMARY: This document proposes to revise an earlier proposed airworthiness directive (AD) that would apply to certain Rockwell Collins, Inc. (Rockwell) ADC–85, ADC–85A, ADC–850C, and ADC–850F air data computers that are installed on airplanes. The earlier NPRM would have required you to replace any

affected air data computer (ADC) with one that has a reprogrammed and tested central processing unit (CPU) circuit card and circuit card assemblies. The earlier NPRM resulted from a flight test that showed that these ADCs could display an unwarranted ADC flag in response to the airplane's ''Normal/Alternate Air'' static source selection capability. Revised service information revealed the need to change the applicability of the affected ADC units that are installed on airplanes. In addition, evaluation of the public comments on the NPRM reveals the need to change the number and models of airplanes that could have the affected ADC units installed. Since these actions impose an additional burden over that proposed in the NPRM, we are reopening the comment period to allow the public the chance to comment on these additional actions.

DATES: The Federal Aviation Administration (FAA) must receive any comments on this proposed rule on or before May 17, 2002.

ADDRESSES: Submit comments to FAA, Central Region, Office of the Regional Counsel, Attention: Rules Docket No. 2000–CE–14–AD, 901 Locust, Room 506, Kansas City, Missouri 64106. You may view any comments at this location between 8 a.m. and 4 p.m., Monday through Friday, except Federal holidays. You may also send comments electronically to the following address: *9–ACE–7–Docket@faa.gov.* Comments sent electronically must contain ''Docket No. 2000–CE–76–AD'' in the subject line. If you send comments electronically as attached electronic files, the files must be formatted in Microsoft Word 97 for Windows or ASCII text.

You may get service information that applies to this proposed AD from Rockwell Collins, Business and Regional Systems, 400 Collins Road Northeast,Cedar Rapids, Iowa 52498; telephone: (319) 295–2512; facsimile: (319) 295–5064. You may also view this information at the Rules Docket at the address above.

FOR FURTHER INFORMATION CONTACT: Roger A. Souter, FAA, Wichita Aircraft Certification Office (ACO), 1801 Airport Road, Rm 100, Wichita, Kansas 67209; telephone: (316) 946–4134; facsimile: (316) 946–4407; e-mail address: *Roger.Souter@faa.gov.*

SUPPLEMENTARY INFORMATION:

Comments Invited

How Do I Comment on This Proposed AD?

The FAA invites comments on this proposed rule. You may submit whatever written data, views, or arguments you choose. You need to include the rule's docket number and submit your comments to the address specified under the caption **ADDRESSES.** We will consider all comments received on or before the closing date. We may amend this proposed rule in light of comments received. Factual information that supports your ideas and suggestions is extremely helpful in evaluating the effectiveness of this proposed AD action and determining whether we need to take additional rulemaking action.

Are There Any Specific Portions of This Proposed AD I Should Pay Attention to?

The FAA specifically invites comments on the overall regulatory, economic, environmental, and energy aspects of this proposed rule that might suggest a need to modify the rule. You may view all comments we receive before and after the closing date of the rule in the Rules Docket. We will file a report in the Rules Docket that summarizes each contact we have with the public that concerns the substantive parts of this proposed AD.

How Can I Be Sure FAA Receives My Comment?

If you want FAA to acknowledge the receipt of your mailed comments, you must include a self-addressed, stamped postcard. On the postcard, write ''Comments to Docket No. 2000–CE–14–AD.'' We will date stamp and mail the postcard back to you.

Discussion

What Events Have Caused This Proposed AD?

The air data computer (ADC), as part of its monitoring process, tests for errant sensor behavior such as unreasonable jumps in altitude and unreasonably high vertical speed. When the ADC detects an errant sensor behavior, the ADC displays a flag for 5.5 seconds plus the time it takes for the sensor to settle within the limits for another 5.5-second period. This results in a minimum ADC flag display of 11 seconds.

Testing of certain Rockwell Collins ADCs reveals the ADC could display unwarranted flags on aircraft where you can select the ''Normal/Alternate Air'' static source. When there is a significant difference between normal and alternate/revisionary static air sources, you can exceed the ADC monitor thresholds and the ADC would display flags.

If the flight crew used the undesirable ADC flag displays to deselect the alternate static air source before the initial 11-second display period, a valid air source may have been deselected. Confusion could result when the previously unflagged normal static air source is reselected. This may also result in the ADC displaying a flag for the first 11 seconds. The affected ADCs include:

Unit	Part No.	Applicable to serial No.
ADC–85 (Incorporating Rockwell Collins Service Bulletin No. 58)	622–8051–002 622–8051–003	All units.
ADC–85A (Incorporating Rockwell Collins Service Bulletin No. 58)	822–0370–113 822–0370–123 822–0370–139 822–0370–404 822–0370–408	All units.
ADC–850D (Incorporating Rockwell Collins Service Bulletin No. 58)	822–0389–133	All up to and including 3DGW (except for 1P6D, 22RC–22RF, and 23WK–3DGP).
ADC–850F	822–1036–406 822–1036–418	All Units.

What Are the Consequences If the Condition Is Not Corrected?

If these situations were to occur while the flight crew were making critical flight decisions, this unwarranted ADC flag could distract the crew, and the lack of attention to the critical actions could result in an unsafe operating condition.

Is There Service Information That Applies to This Subject?

Rockwell has issued Service Bulletin No. 62 (ADC–85/85A/850C/850D/850E/

850F–34–62), Revision 2, dated March 7, 2000, and Service Bulletin No. 62 (ADC–85/85A/850C/850F–34–62), dated October 25, 1999. Service Bulletin 62, Revision 2, reflects the addition of ADC–850D to the list of affected units and the removal of ADC–850C from the list of affected units.

What Are the Provisions of This Service Information?

These service bulletins contain procedures for replacing or reprogramming applicable parts or circuit card assemblies on central processing unit (CPU) circuit cards in the ADC and testing the modified ADC.

Has FAA Taken Any Action to This Point?

We issued a proposal to amend part 39 of the Federal Aviation Regulations (14 CFR part 39) to include an AD that would apply to certain Rockwell Collins, Inc. (Rockwell) ADC–85, ADC–85A, ADC–850C, and ADC–850F air data computers that are installed on airplanes. This proposal was published in the **Federal Register** as a notice of proposed rulemaking (NPRM) on October 2, 2000 (65 FR 58678). The NPRM proposed to require you to:

—Remove the ADC from the airplane;
—Replace or reprogram applicable parts or Circuit Card Assemblies on the CPU Circuit Card;
—Test the modified ADC; and
—Install the modified ADC in the airplane.

You would have to accomplish the proposed actions in accordance with Rockwell Service Bulletin No. 62 (ADC–85/85A/850C/850F–34–62), dated October 25, 1999.

Was the Public Invited To Comment?

The FAA encouraged interested persons to participate in the making of this amendment. The following presents the comments received on the proposal and FAA's response to each comment:

Comment Issue No. 1: Remove Dassault Aviation Model F2000 From the Applicable Airplane Model List

What Is the Commenter's Concern?

A commenter states that, even though fitted with the subject ADC, the Dassault Aviation Model F2000 airplane is not designed with the ability to use alternate static sources.

What Is FAA's Response to the Concern?

We concur that the airplane is not designed with the ability to use alternate static sources. Therefore, we are removing the Dassault Aviation Model F2000 from the applicable airplane model list.

Comment Issue No. 2: Modify the Estimate of the Number of Airplanes Affected on the U.S. Registry

What Is the Commenter's Concern?

A commenter states that more aircraft are affected than the 245 listed in the NPRM. The commenter notes that the ADC is installed in additional aircraft and is installed on at least 329 airplanes.

What Is FAA's Response to the Concern?

The number of airplanes affected by this AD could exceed 245. We have no way of determining the exact number that have the affected ADCs installed. Our best estimate in the NPRM was 245 airplanes. Further research indicates that at least 329 airplanes could have the ADC installed. Therefore, we will change the cost impact to represent an estimate of 329 airplanes instead of 245 airplanes.

Comment Issue No. 3: Modify the List of Applicable Raytheon Airplanes

What Is the Commenter's Concern?

A commenter states that the list of affected airplanes is incorrect for Raytheon airplane models. The list incorrectly identifies two of the Raytheon airplane models as 250 and 350. The commenter states that these are marketing designators and not part of FAA's model identity. For the ADC–85/ADC–85A units, the commenter states that the correct models are Raytheon B200, B300, and 1900D, and that the Model C90A airplanes should be added to the list.

What Is FAA's Response to the Concern?

We concur with these comments and are changing this proposed rule accordingly.

Comment Issue No. 4: Add a Placard for Temporary Information Regarding the Unsafe Condition

What Is the Commenter's Concern?

A commenter states that the pilot should have some kind of indication of the problem if the actions specified in the service bulletin are not yet incorporated on the airplane (*e.g.,* during the 12 calendar month time before mandatory compliance). This commenter suggests that FAA should require the operators to install a placard until the modification is incorporated.

What Is FAA's Response to the Concern?

The FAA does not concur. We evaluated the nature of the unsafe condition against the time proposed for compliance when preparing the NPRM. Rockwell Collins did issue Operator Bulletin 99–7, dated August 1999, which provides information on such a placard. Although it is a good idea to incorporate the actions of this operator bulletin, we have determined that the modification as proposed, including the compliance time, addresses the unsafe condition.

We will include a note in the proposed AD recommending compliance with Rockwell Collins Operator Bulletin 99–7, dated August 1999.

Comment Issue No. 5: Recommend the Effective Date of the AD to Accommodate Production Aircraft

What Is the Commenter's Concern?

A commenter recommends that FAA establish the effective date of the AD to accommodate incorporation of the AD into production aircraft. The commenter suggests May 1, 2001, or later, as the effective date of the AD.

What Is FAA's Response to the Concern?

The FAA will take this into consideration when establishing the effective date.

Comment Issue No. 6: Make Reference to a Later Service Bulletin for a More Complete List of Affected Units

What Is the Commenter's Concern?

A commenter states that Rockwell Collins Service Bulletin No. 62 (ADC–85/85A/850C/850D/850E/850F–34–62), Revision 2, dated March 7, 2000, contains a more complete list of affected units. The commenter recommends the incorporation of this service bulletin into the AD.

What Is FAA's Response to the Concern?

The FAA concurs that Revision 2 of the service bulletin contains a more complete list of affected ADC units. Revision 2 reflects the removal of ADC–850C from the affected list and adds ADC–850D to the affected list. However, Service Bulletin No. 62, dated October 25, 1999, is acceptable for ADC–85/85A/850F units. Service Bulletin No. 62, Revision 2, dated March 7, 2000, is acceptable for ADC–85/85A/850D/850F units. We will incorporate this bulletin into the proposed AD and change the proposed AD applicability accordingly.

The FAA's Determination

What Has FAA Decided?

After examining the circumstances and reviewing all available information related to the incidents described above, we have determined that:

—The unsafe condition exists or could develop on airplanes equipped with

all ADC units identified in the E. Compliance section of Rockwell Collins Service Bulletin No. 62, Revision 2, dated March 7, 2000.

—The NPRM should be expanded to include these additional units; and

—AD action should be taken in order to correct this unsafe condition.

The Supplemental NPRM

How Will the Changes to the NPRM Impact the Public?

Proposing that the NPRM apply to certain ADC–850D air data computers that are installed on airplanes presents actions that go beyond the scope of what was already proposed. Therefore, we are issuing a supplemental NPRM and reopening the comment period to allow the public additional time to comment on the proposed AD.

What Are the Provisions of the Supplemental NPRM?

This proposed AD would require you to replace any affected ADC with one that has a reprogrammed and tested CPU circuit card and circuit card assemblies

Cost Impact

How Many Airplanes Would This Proposed AD Impact?

We estimate that this proposed AD affects more than 329 airplanes in the U.S. registry.

What Would Be the Cost Impact of This Proposed AD on Owners/Operators of the Affected Airplanes?

We estimate the following costs to accomplish the proposed removal, installation, reprogramming, and testing of the ADC in each airplane:

Labor cost	Parts cost	Total cost per airplane	Total cost on U.S. operators
6 workhours × $60 per hour = $360	$680	$1040	$342,160

For units that are still under warranty, Rockwell will provide the parts and labor at no charge.

Regulatory Impact

Would This Proposed AD Impact Various Entities?

The regulations proposed herein would not have a substantial direct effect on the States, on the relationship between the national government and the States, or on the distribution of power and responsibilities among the various levels of government. Therefore, it is determined that this proposed rule would not have federalism implications under Executive Order 13132.

Would This Proposed AD Involve a Significant Rule or Regulatory Action?

For the reasons discussed above, I certify that this proposed action (1) Is not a ''significant regulatory action'' under Executive Order 12866; (2) is not a ''significant rule'' under DOT Regulatory Policies and Procedures (44 FR 11034, February 26, 1979); and (3) if promulgated, will not have a significant economic impact, positive or negative, on a substantial number of small entities under the criteria of the Regulatory Flexibility Act. A copy of the draft regulatory evaluation prepared for this action has been placed in the Rules Docket. A copy of it may be obtained by contacting the Rules Docket at the location provided under the caption **ADDRESSES**.

List of Subjects in 14 CFR Part 39

Air transportation, Aircraft, Aviation safety, Safety.

The Proposed Amendment

Accordingly, under the authority delegated to me by the Administrator, the Federal Aviation Administration proposes to amend part 39 of the Federal Aviation Regulations (14 CFR part 39) as follows:

PART 39—AIRWORTHINESS DIRECTIVES

1. The authority citation for part 39 continues to read as follows:

Authority: 49 U.S.C. 106(g), 40113, 44701.

§ 39.13 [Amended]

2. FAA amends § 39.13 by adding a new airworthiness directive (AD) to read as follows:

Rockwell Collins, Inc.: Docket No. 2000–CE–14–AD.

(a) *What airplanes are affected by this AD?* This AD affects the following Rockwell Collins air data computers (ADC) that are installed in, but not limited to the airplanes that are listed below:

(1) Affected ADCs:

Unit	Collins part No. (CPN)	Applicable to serial No.
ADC–85 (Incorporating Rockwell Collins Service Bulletin No. 58)	622–8051–002 622–8051–003	All units.
ADC–85A (Incorporating Rockwell Collins Service Bulletin No. 58)	822–0370–113 822–0370–123 822–0370–139 822–0370–404 822–0370–408	All units.
ADC–850D (Incorporating Rockwell Collins Service Bulletin No. 58)	822–0389–133	All up to and including 3DGW (except for 1P6D, 22RC–22RF, and 23WK–3DGP).
ADC–850F	822–1036–406 822–1036–418	All units.

(2) List of airplanes where the affected ADC could be installed. This is not a comprehensive list and airplanes not on this list that have the ADC installed through field approval or other methods are still affected by this AD:

Unit	Airplane model
ADC–85/ADC–85A	Astra AIA. Chinese Y7 and Y8. Czech LET–610. DC–8. Falcon 20F. Piaggio P–180. Raytheon B200, B300, C90A and 1900D. Saab 340.
ADC–850D	Lear 60.
ADC–850F	Falcon 20, 50, and 50EX.

(b) *Who must comply with this AD?* Anyone who wishes to operate any airplane that uses one of the above referenced Rockwell Collins air data computers must comply with this AD.

(c) *What problem does this AD address?* The actions specified by this AD are intended to prevent an unwarranted display of the ADC flag when switching static air sources. This could cause the flight crew to react to this incorrect flight information and possibly result in an unsafe operating condition.

(d) *What actions must I accomplish to address this problem?* To address this problem, you must accomplish the following:

Actions	Compliance	Procedures
(1) Perform the following, unless already accomplished:. (i) Remove any affected ADC from the airplanes (ii) As applicable, replace or reprogram parts or circuit card assemblies on central processing unit (CPU) circuit cards (iii) Test the ADC (iv) Install the modified ADC in the airplanes	Within the next 12 calendar months after the effective date of this AD.	In accordance with Rockwell Collins Service Bulletin No. 62 (ADC–85/85A/850C/850D/850E/850F–34–62), Revision 2, dated March 7, 2000, or Service Bulletin No. 62, dated October 25, 1999, as applicable, the applicable Collins Computer Component Maintenance Manual, and Collins Avionics Standard Shop Practices Instruction Manual.
(2) Do not install on any airplane one of the affected ADCs unless the modification and test required by paragraphs (d)(ii) and (d)(iii) of this AD are accomplished.	As of the effective date of this AD	In accordance with Rockwell Collins Service Bulletin No. 62 (ADC–85/85A/850C/850D/850E/850F–34–62), Revision 2, dated March 7, 2000, or Service Bulletin No. 62, dated October 25, 1999, as applicable.

Note 1: Rockwell Collins Operator Bulletin 99–7, dated August 1999, contains information about an operational placard to install until accomplishment of the actions of this AD. While not necessary to address the unsafe condition in this AD, FAA highly recommends that you incorporate this placard.

(e) *Can I comply with this AD in any other way?* You may use an alternative method of compliance or adjust the compliance time if:

(1) Your alternative method of compliance provides an equivalent level of safety; and

(2) The Manager, Wichita Aircraft Certification Office (ACO), approves your alternative. Send your request through an FAA Principal Maintenance Inspector, who may add comments and then send it to the Manager, Wichita ACO.

Note 2: This AD applies to each airplane identified in paragraph (a) of this AD, regardless of whether it has been modified, altered, or repaired in the area subject to the requirements of this AD. For airplanes that have been modified, altered, or repaired so that the performance of the requirements of this AD is affected, the owner/operator must request approval for an alternative method of compliance in accordance with paragraph (e) of this AD. The request should include an assessment of the effect of the modification, alteration, or repair on the unsafe condition addressed by this AD; and, if you have not eliminated the unsafe condition, specific actions you propose to address it.

(f) *Where can I get information about any already-approved alternative methods of compliance?* Contact Roger A. Souter, FAA, Wichita Aircraft Certification Office (ACO), 1801 Airport Road, Room 100, Wichita, Kansas 67209; telephone: (316) 946–4134; facsimile: (316) 946–4407, e-mail: *Roger.Souter@faa.gov.*

(g) *What if I need to fly the airplane to another location to comply with this AD?* The FAA can issue a special flight permit under sections 21.197 and 21.199 of the Federal Aviation Regulations (14 CFR 21.197 and 21.199) to operate your airplane to a location where you can accomplish the requirements of this AD.

(h) *How do I get copies of the documents referenced in this AD?* You may get copies of the documents referenced in this AD from Rockwell Collins, Business and Regional Systems, 400 Collins Road Northeast, Cedar Rapids, Iowa 52498. You may view these documents at FAA, Central Region, Office of the Regional Counsel, 901 Locust, Room 506, Kansas City, Missouri 64106.

Issued in Kansas City, Missouri, on March 12, 2002.

Dorenda D. Baker,

Acting Manager, Small Airplane Directorate, Aircraft Certification Service.

[FR Doc. 02–6629 Filed 3–19–02; 8:45 am]

BILLING CODE 4910–13–P

DEPARTMENT OF TRANSPORTATION

Federal Aviation Administration

14 CFR Part 39

[Docket No. 2000–CE–76–AD]

RIN 2120–AA64

Airworthiness Directives; Air Tractor, Inc. Model AT–802 and AT–802A Airplanes

AGENCY: Federal Aviation Administration, DOT.

ACTION: Notice of proposed rulemaking (NPRM).

SUMMARY: This document proposes to adopt a new airworthiness directive (AD) that would apply to certain Air Tractor, Inc. (Air Tractor) Model AT–802 and AT–802A airplanes. This

proposed AD would require you to replace the rudder control cables and fairleads with parts of improved design. This proposed AD is the result of a report that a rudder control cable broke because of wear at the aft fairlead. The actions specified by this proposed AD are intended to prevent wear of the rudder control cables at the fairlead, which could cause the rudder control cable to break and result in loss of rudder control.

DATES: The Federal Aviation Administration (FAA) must receive any comments on this rule on or before May 17, 2002.

ADDRESSES: Submit comments to FAA, Central Region, Office of the Regional Counsel, Attention: Rules Docket No. 2000–CE–76–AD, 901 Locust, Room 506, Kansas City, Missouri 64106. You may view any comments at this location between 8 a.m. and 4 p.m., Monday through Friday, except Federal holidays. You may also send comments electronically to the following address: *9-ACE-7-Docket@faa.gov.* Comments sent electronically must contain ''Docket No. 2000–CE–76–AD'' in the subject line. If you send comments electronically as attached electronic files, the files must be formatted in Microsoft Word 97 for Windows or ASCII text.

You may get service information that applies to this proposed AD from Air Tractor, Incorporated, P.O. Box 485, Olney, Texas 76374. You may also view this information at the Rules Docket at the address above.

FOR FURTHER INFORMATION CONTACT: Garry D. Sills, Aerospace Engineer, FAA, Fort Worth Airplane Certification Office, 2601 Meacham Boulevard, Fort Worth, Texas 76193–0150; telephone: (817) 222–5154; facsimile: (817) 222–5960.

SUPPLEMENTARY INFORMATION:

Comments Invited

How Do I Comment on This Proposed AD?

The FAA invites comments on this proposed rule. You may submit whatever written data, views, or arguments you choose. You need to include the rule's docket number and submit your comments to the address specified under the caption **ADDRESSES.** We will consider all comments received on or before the closing date. We may amend this proposed rule in light of comments received. Factual information that supports your ideas and suggestions is extremely helpful in evaluating the effectiveness of this proposed AD action and determining whether we need to take additional rulemaking action.

Are There Any Specific Portions of This Proposed AD I Should Pay Attention to?

The FAA specifically invites comments on the overall regulatory, economic, environmental, and energy aspects of this proposed rule that might suggest a need to modify the rule. You may view all comments we receive before and after the closing date of the rule in the Rules Docket. We will file a report in the Rules Docket that summarizes each contact we have with the public that concerns the substantive parts of this proposed AD.

How Can I Be Sure FAA Receives My Comment?

If you want FAA to acknowledge the receipt of your mailed comments, you must include a self-addressed, stamped postcard. On the postcard, write ''Comments to Docket No. 2000–CE–76–AD.'' We will date stamp and mail the postcard back to you.

Discussion

What Events Have Caused This Proposed AD?

The FAA received reports of the rudder control cables wearing at the aft fairlead area on Air Tractor Model AT–802 and AT–802A airplanes. In one instance the rudder cable broke on a Model AT–802 airplane.

The manufacturer has designed a new cable that incorporates a stainless steel sleeve that is crimped to the cable in the fairlead area. The stainless steel sleeve is intended to prevent wear of the new cable in that area.

What Are the Consequences if the Condition Is Not Corrected?

If this condition is not corrected, rudder control cables may wear and break at the fairlead area. Broken rudder control cables could result in loss of rudder control.

Is There Service Information That Applies to This Subject?

Air Tractor has issued Snow Engineering Company Service Letter # 199, dated May 30, 2000.

What Are the Provisions of This Service Bulletin?

The service bulletin includes procedures for installing the improved design rudder control cables and fairleads.

The FAA's Determination and an Explanation of the Provisions of this Proposed AD

What Has FAA Decided?

After examining the circumstances and reviewing all available information related to the incidents described above, we have determined that:

—the unsafe condition referenced in this document exists or could develop on other Air Tractor Model AT–802 and AT–802A airplanes of the same type design;

—the actions specified in the previously-referenced service information should be accomplished on the affected airplanes; and

—AD action should be taken in order to correct this unsafe condition.

What Would This Proposed AD Require?

This proposed AD would require you to install the improved design rudder control cables and fairleads.

Cost Impact

How Many Airplanes Would This Proposed AD Impact?

We estimate that this proposed AD affects 81 airplanes in the U.S. registry.

What Would Be the Cost Impact of This Proposed AD on Owners/Operators of the Affected Airplanes?

We estimate the following costs to accomplish the proposed modification:

Labor cost	Parts cost	Total cost per airplane	Total cost on U.S. operators
2 workhours × $60 per hour = $120	$300	$420	$34,020

Regulatory Impact

Would This Proposed AD Impact Various Entities?

The regulations proposed herein would not have a substantial direct effect on the States, on the relationship between the national government and the States, or on the distribution of power and responsibilities among the various levels of government. Therefore, it is determined that this proposed rule would not have federalism implications under Executive Order 13132.

Would This Proposed AD Involve a Significant Rule or Regulatory Action?

For the reasons discussed above, I certify that this action (1) is not a ''significant regulatory action'' under Executive Order 12866; (2) is not a ''significant rule'' under DOT Regulatory Policies and Procedures (44 FR 11034, February 26, 1979); and (3) if promulgated, will not have a significant economic impact, positive or negative, on a substantial number of small entities under the criteria of the Regulatory Flexibility Act. A copy of the draft regulatory evaluation prepared for this action has been placed in the Rules Docket. A copy of it may be obtained by contacting the Rules Docket at the location provided under the caption **ADDRESSES.**

List of Subjects in 14 CFR Part 39

Air transportation, Aircraft, Aviation safety, Safety.

The Proposed Amendment

Accordingly, under the authority delegated to me by the Administrator, the Federal Aviation Administration proposes to amend part 39 of the Federal Aviation Regulations (14 CFR part 39) as follows:

PART 39—AIRWORTHINESS DIRECTIVES

1. The authority citation for part 39 continues to read as follows:

Authority: 49 U.S.C. 106(g), 40113, 44701.

§ 39.13 [Amended]

2. FAA amends § 39.13 by adding a new airworthiness directive (AD) to read as follows:

Air Tractor, Inc.: Docket No. 2000–CE–76–AD.

(a) *What airplanes are affected by this AD?* This AD affects Model AT–802 and AT–802A airplanes, serial numbers 802–0001 through 802–0081, that are certificated in any category.

(b) *Who must comply with this AD?* Anyone who wishes to operate any of the airplanes identified in paragraph (a) of this AD must comply with this AD.

(c) *What problem does this AD address?* The actions specified by this AD are intended to prevent wear of the rudder control cables at the fairlead, which could cause the rudder control cable to break and result in loss of rudder control.

(d) *What actions must I accomplish to address this problem?* To address this problem, you must accomplish the following:

Actions	Compliance	Procedures
(1) Replace the rudder control cables and fairlead with part numbers 70524–10–500 or 70524–6–500, and 70122–1, as specified in the service letter.	Within the next 500 hours time-in-service (TIS) after the effective date of this AD, unless already accomplished.	Accomplish the replacements in accordance with Snow Engineering Company Service Letter # 199, dated May 30, 2000, and applicable drawing number 70523 of the replacement kit, as specified in the service letter.
(2) Do not install any rudder control cable that does not have a stainless steel sleeve crimped to the cable in the fairlead area.	Not Applicable	Not Applicable.

(e) *Can I comply with this AD in any other way?* You may use an alternative method of compliance or adjust the compliance time if:

(1) Your alternative method of compliance provides an equivalent level of safety; and

(2) The Manager, Fort Worth Airplane Certification Office (ACO), approves your alternative. Submit your request through an FAA Principal Maintenance Inspector, who may add comments and then send it to the Manager, Fort Worth ACO.

Note: This AD applies to each airplane identified in paragraph (a) of this AD, regardless of whether it has been modified, altered, or repaired in the area subject to the requirements of this AD. For airplanes that have been modified, altered, or repaired so that the performance of the requirements of this AD is affected, the owner/operator must request approval for an alternative method of compliance in accordance with paragraph (e) of this AD. The request should include an assessment of the effect of the modification, alteration, or repair on the unsafe condition addressed by this AD; and, if you have not eliminated the unsafe condition, specific actions you propose to address it.

(f) *Where can I get information about any already-approved alternative methods of compliance?* Contact Garry D. Sills, Aerospace Engineer, FAA, Fort Worth Airplane Certification Office, 2601 Meacham Boulevard, Fort Worth, Texas 76193–0150; telephone: (817) 222–5154; facsimile: (817) 222–5960.

(g) *What if I need to fly the airplane to another location to comply with this AD?* The FAA can issue a special flight permit under sections 21.197 and 21.199 of the Federal Aviation Regulations (14 CFR 21.197 and 21.199) to operate your airplane to a location where you can accomplish the requirements of this AD.

(h) *How do I get copies of the documents referenced in this AD?* You may get copies of the documents referenced in this AD from Air Tractor, Incorporated, P.O. Box 485, Olney, Texas 76374. You may view these documents at FAA, Central Region, Office of the Regional Counsel, 901 Locust, Room 506, Kansas City, Missouri 64106.

Issued in Kansas City, Missouri, on March 12, 2002.

Dorenda D. Baker,

Acting Manager, Small Airplane Directorate, Aircraft Certification Service.

[FR Doc. 02–6628 Filed 3–19–02; 8:45 am]

BILLING CODE 4910–13–P

CONSUMER PRODUCT SAFETY COMMISSION

16 CFR Chapter II

Regulatory Options for Addressing Upholstered Furniture Flammability; Public Meeting

AGENCY: Consumer Product Safety Commission.

ACTION: Notice of public meeting and request for comments.

SUMMARY: The Consumer Product Safety Commission (CPSC or Commission) will conduct a public meeting June 18–19, 2002 to discuss options for addressing upholstered furniture flammability. The meeting is not a Commission hearing. The focus of the discussions will be the supporting information and draft upholstered furniture flammability standard developed by CPSC staff included in the October 30, 2001 briefing package entitled ''Upholstered Furniture Flammability: Regulatory Options,'' the progress of outside groups in addressing the same problem, and recent developments in related

flammability issues.[1] The Commission invites written comments and oral presentations from individuals, associations, firms, and government agencies with information or comments related to the briefing package. The Commission will evaluate these submissions in its deliberations on the flammability hazards associated with upholstered furniture.

DATES: The meeting will begin at 10:00 a.m. on June 18, 2002, and continue on June 19, 2002. Requests to make oral presentations, and 10 copies of the text of the presentation, must be received by the CPSC Office of the Secretary no later than May 20, 2002. Persons making presentations at the meeting should provide an additional 50 copies for dissemination on the date of the meeting. Written submissions that are in place of, or in addition to oral presentations, must be received by the Office of the Secretary no later than July 18, 2002. Ten copies should be provided.

Presentation texts and other written submissions should identify the author's affiliation with, or employment or sponsorship by, any entity with an interest in the upholstered furniture proceeding. Any data, analyses or studies should include substantiation and citations. The Commission reserves the right to limit the number of persons who make presentations and the duration of their presentations.

ADDRESSES: The meeting will be in room 420 of the East-West Towers Building, 4330 East-West Highway, Bethesda, MD. Written comments, requests to make oral presentations, and texts of oral presentations should be captioned ''Upholstered Furniture Flammability Proceeding'' and mailed to the Office of the Secretary, Consumer Product Safety Commission, Washington, DC 20207, or delivered to that office, room 502, 4330 East-West Highway, Bethesda, Maryland 20814. Comments, requests, and texts of oral presentations may also be filed by facsimile to (301) 504–0127 or by e-mail to *cpsc-os@cpsc.gov.*

FOR FURTHER INFORMATION CONTACT: For information about the purpose or subject matter of this meeting contact Dale R. Ray, Project Manager, Directorate for Economic Analysis, U.S. Consumer Product Safety Commission, Washington, DC 20207; telephone (301) 504–0962, extension 1323; fax (301) 504–0109; e-mail *dray@cpsc.gov.* For information about the schedule for submission of written comments, requests to make oral presentations, and submission of texts of oral presentations, contact Rockelle Hammond, Office of the Secretary, Consumer Product Safety Commission, Washington, DC 20207; telephone (301) 504–0800, extension 1232; fax (301) 504–0127; e-mail *rhammond@cpsc.gov.*

SUPPLEMENTARY INFORMATION:

A. Background

In 1994, the Commission initiated a regulatory proceeding to address the hazard of small open flame ignitions of upholstered furniture by publication of an advance notice of proposed rulemaking (ANPR). 59 FR 30735 (June 15, 1994). Small open flame sources include, for example, cigarette lighters, matches, and candles. The CPSC staff work indicates that a small open flame performance standard for upholstered furniture could reduce the risk of death, injury, and property loss.

Following issuance of the ANPR, CPSC staff developed a draft performance standard and a test method to evaluate the small open flame performance of upholstered furniture. In October 1997, the staff forwarded a briefing package to the Commission concluding that a small open flame standard was feasible and could effectively reduce the risks to consumers, including risks from both small open flame and cigarette ignitions. Since 1997, the staff has continued to develop the small open flame standard.

The standard that the staff has drafted contains performance requirements for small open flame ignition resistance of seating areas and dust covers of upholstered furniture. It also includes an optional seating barrier test that would allow the use of fire-retardant barriers, or interliners, instead of FR cover fabrics. The seating barrier test is intended to preserve consumer choice among many existing upholstery fabrics. CPSC staff believes that this would give manufacturers flexibility in achieving compliance, and would reduce the potential economic burden of the performance standard, especially for small businesses.

In the 1997 briefing package, the staff recommended that the CPSC gather additional scientific information to ensure that flame retardant (FR) upholstery fabric treatments that manufacturers might use would not result in adverse health effects. In 1998, the Commission held a public hearing on FR chemical issues. Representatives of government, industry, fire safety organizations, and other interested parties testified at the May 5–6, 1998 public hearing, or submitted information about FR chemicals following the hearing. The staff incorporated the information submitted pursuant to the public hearing and all other available scientific data into the FR chemical risk assessment in the October 30, 2001 briefing package. That assessment concluded that four of the eight FR chemicals selected for risk assessment would clearly not be considered hazardous to consumers under the Federal Hazardous Substances Act (FHSA). The assessment also identified one chemical as unlikely to be hazardous, one as hazardous, and two for which additional data were needed.

In the CPSC Fiscal Year 1999 appropriation bill, Congress directed the Commission to sponsor an independent study by the National Academy of Sciences (NAS) of potential health risks from FR chemicals that might be used to meet a flammability standard. The final NAS report was published in July 2000. The NAS study concluded that 8 of the 16 FR chemicals reviewed would present a minimal risk, even under ''worst case'' exposure assumptions. The NAS recommended further study for the remaining 8 chemicals.

B. The Public Meeting

The purpose of the public meeting is to provide a forum for dialog between Commission staff and interested parties on the work performed to date by the staff in developing a draft small open flame ignition standard for upholstered furniture, the related information developed during that effort, the progress of efforts by outside organizations to address the risk, and recent developments in related flammability issues. The meeting is not a Commission hearing.

Participation in the meeting is open. The CPSC staff will notify specific representatives of identified interest groups such as industry sectors (furniture, fabrics, foam, chemicals), fire safety and government (national, state/local, international), and consumer interests of the meeting. The meeting will be conducted in an open discussion format. Participants may be organized into panels to address specific topics. See the **DATES** section of this notice for information on making requests to give oral presentations at the meeting and on making written submissions.

[1] Briefing memorandum from Dale R. Ray, Project Manager, Directorate for Economic Analysis, to the Commission, ''Upholstered Furniture Flammability: Regulatory Options,'' October 30, 2001. The document may be obtained from the CPSC web site at www.cpsc.gov or from the CPSC Office of the Secretary. The document is also available for inspection at the Commission's Public Reading Room, 4330 East-West Highway, room 419, Bethesda, Maryland 20814. For further information call the Office of the Secretary at (301) 504–0800.

C. Meeting Topics

To assist interested parties in deciding on whether and how to participate in the public meeting, or to submit written comments on the staff briefing package, the Commission is providing the following list of topics.

- Fire data & analysis
- Standards development & laboratory testing
- The CPSC staff's draft small open flame standard
- FR chemical testing, analysis & risk assessment
- Economic analysis
- Other standards/harmonization
  —California TB–117
  —United Kingdom regulations
  —Voluntary standards activities
- Industry efforts to develop safer products & materials
- Regulatory alternatives

As indications of interest in making presentations and otherwise participating in the meeting are received, the Commission will revise and update the list of topics.

Dated: March 14, 2002.

Todd A. Stevenson,

Secretary, Consumer Product Safety Commission.

[FR Doc. 02–6633 Filed 3–19–02; 8:45 am]

BILLING CODE 6355–01–P

DEPARTMENT OF HEALTH AND HUMAN SERVICES

Food and Drug Administration

21 CFR Part 101

[Docket No. 01N–0458]

RIN 0910–AA19

Food Labeling; Guidelines for Voluntary Nutrition Labeling of Raw Fruits, Vegetables, and Fish; Identification of the 20 Most Frequently Consumed Raw Fruits, Vegetables, and Fish

AGENCY: Food and Drug Administration, HHS.

ACTION: Proposed rule.

SUMMARY: The Food and Drug Administration (FDA) is proposing to amend the voluntary nutrition labeling regulations by updating the names and the nutrition labeling values for the 20 most frequently consumed raw fruits, vegetables, and fish in the United States. We are taking this action because current regulations require the agency to publish proposed updates (or a notice that the data sets have not changed from the previous publication) at least every 4 years. We also propose to revise the guidelines for the voluntary nutrition labeling of raw fruits, vegetables, and fish to make necessary changes resulting from the updated nutrition information and to provide further clarification of the guidelines. Availability of the updated nutrition labeling values in retail stores and on individually packaged raw produce and fish will enable consumers to make better purchasing decisions to meet their dietary needs.

DATES: Submit written or electronic comments on this proposal by June 3, 2002. See section IX of this document for the proposed effective date of a final rule based on this document.

ADDRESSES: Submit written comments to the Dockets Management Branch (HFA–305), Food and Drug Administration, 5630 Fishers Lane, rm. 1061, Rockville, MD 20852. Submit electronic comments to http://www.fda.gov/dockets/ecomments.

FOR FURTHER INFORMATION CONTACT: Lori LeGault, Center for Food Safety and Applied Nutrition (HFS–840), Food and Drug Administration, 5100 Paint Branch Pkwy., College Park, MD 20740, 301–436–1791, or e-mail: LLegault@cfsan.fda.gov.

SUPPLEMENTARY INFORMATION:

I. Background

In response to requirements of the Nutrition Labeling and Education Act of 1990 (the 1990 amendments) (Public Law 101–135), which amended the Federal Food, Drug, and Cosmetic Act (the act), we published final regulations in the **Federal Register** of November 27, 1991 (56 FR 60880) (the 1991 final rule), and corrections in the **Federal Registers** of March 6, 1992 (57 FR 8174), and March 26, 1992 (57 FR 10522) that: (1) Identified the 20 most frequently consumed raw fruits, vegetables, and fish in the United States, which are those varieties purchased raw but not necessarily consumed raw; (2) established guidelines for the voluntary nutrition labeling of these foods; and (3) set the criteria for food retailers to meet substantial compliance with these guidelines. The 1991 final rule also required us to publish proposed updates of the nutrition labeling data for the 20 most frequently consumed raw fruits, vegetables, and fish (or a notice that the data sets have not changed) at least every 2 years (56 FR 60880 at 60888 and 60891).

Next, we published a proposed rule on the voluntary nutrition labeling program in the **Federal Register** of July 18, 1994 (59 FR 36379) (the 1994 proposed rule), and a correction in the **Federal Register** of July 21, 1994 (59 FR 37190). The 1994 proposed rule proposed to: (1) Update the nutrition labeling values for the 20 most frequently consumed raw fruits, vegetables, and fish in the United States; and (2) revise the guidelines for the voluntary nutrition labeling of these foods to reflect the 1993 mandatory nutrition labeling final rules.

Finally, in the **Federal Register** of August 16, 1996 (61 FR 42742), we published a final rule entitled ''Food Labeling; Guidelines for Voluntary Nutrition Labeling of Raw Fruits, Vegetables, and Fish; Identification of the 20 Most Frequently Consumed; and Policy for Data Base Review for Voluntary and Mandatory Nutrition Labeling'' (the 1996 final rule). In the 1996 final rule, among other actions, we revised: (1) The nutrition labeling values for the 20 most frequently consumed raw fruits, vegetables, and fish in the United States, and (2) the guidelines for the voluntary nutrition labeling of these foods. We also modified the guidelines in § 101.45(b) (21 CFR 101.45(b)), in response to comments, to state that we would publish every 4 years (rather than 2 years) proposed updates of the nutrition data or a notice that the data sets have not changed from the previous publication (comment 12, 61 FR 42742 at 42746 and 42760).

We are now proposing to update the listing of the 20 most frequently consumed raw fruits, vegetables, and fish and their nutrition labeling values based on new data submitted or made available to the agency. This will enable consumers to have more accurate and up-to-date nutrition information for these foods.

II. Guidelines for Presentation of the Nutrition Labeling Values

A. Background and Proposed Revisions

To provide clarity and consistency in the voluntary nutrition labeling of raw fruits, vegetables, and fish, we propose to: (1) Divide current § 101.45(a)(3)(iii) into two parts (i.e., into §§ 101.45(a)(3)(iii) and 101.45(a)(3)(iv)) so that § 101.45(a)(3)(iii) pertains only to raw fruits and vegetables and § 101.45(a)(3)(iv) pertains only to raw fish, and (2) revise the wording for consistency and increased readability. In § 101.45(a)(3)(iii), we also propose to change the portion of the footnote about the saturated fat content of avocados from ''* * * avocados provide 1 gram (g) of saturated fat per ounce (oz)'' to ''* * * avocados provide 0.5 g of saturated fat per oz.'' This decrease in saturated fat content is based on the most recent

nutrient data provided by the California Avocado Commission (Ref. 1), which is discussed in section IV.B.1 of this document.

In the 1996 final rule, we modified the language in § 101.45(a)(3)(iii) for raw fruits and vegetables but, inadvertently, failed to do the same for raw fish. In order to provide parallel provisions for raw fish, we are now proposing: (1) To remove that portion of § 101.45(a)(3)(iii) which currently states "* * * When the nutrition labeling information for raw fish is provided on a chart, the listings for dietary fiber and sugars may be omitted if the following footnote is used 'Fish provide negligible amounts of dietary fiber and sugars'" and (2) to add new § 101.45(a)(3)(iv) to read as follows: "When retailers provide nutrition labeling information for more than one raw fish on signs or posters or in brochures, notebooks, or leaflets, the listings for dietary fiber and sugars may be omitted from the charts or individual nutrition labels if the following footnote is used 'Fish provide negligible amounts of dietary fiber and sugars'."

Currently, appendices C and D to part 101 (21 CFR part 101) provide the nutrition labeling values in a chart format with horizontal and vertical columns. Due to space constraints, we are presenting the nutrition labeling values in a chart format (proposed appendices C and D); however, we encourage retailers to display quantitative nutrition information for raw produce and raw fish as a compilation of nutrition labels in the Nutrition Facts format, with allowance for the shortened footnote shown in figure 1 at the bottom of the sign, poster, brochure, notebook, or leaflet. We are continuing to include the optional nutrient, potassium, in proposed appendices C and D because many raw fruits, vegetables, and fish are good sources of this nutrient. The nutrition label for raw apple shown in figure 1 displays the preferred format. However, as § 101.45(a)(4) indicates, when nutrition labeling is provided for individual raw fruits, vegetables, or fish on packages or in brochures, notebooks, or leaflets (i.e., other than on signs and posters), the full footnote required in § 101.9(d)(9) should be presented within the Nutrition Facts box.

BILLING CODE 4160–01–S

Figure 1

Apple

Nutrition Facts

Serving Size 1 medium (154g/5.5 oz)

Amount Per Serving	
Calories 80	Calories from Fat 0
	% Daily Value*
Total Fat 0g	**0%**
Saturated Fat 0g	**0%**
Cholesterol 0mg	**0%**
Sodium 0mg	**0%**
Potassium 170mg	**5%**
Total Carbohydrate 22g	**7%**
Dietary Fiber 5g	**20%**
Sugars 16g	
Protein 0g	

Vitamin A 2%	•	Vitamin C 8%
Calcium 0%	•	Iron 2%

* Percent Daily Values are based on a 2,000 calorie diet.

B. Impact of the Trans Fatty Acids Proposed Rule

FDA has issued a proposed rule for *trans* fatty acids (also called "*trans* fat") in nutrition labeling (64 FR 62746, November 17, 1999) which, if finalized, will apply to the voluntary nutrition labeling program as well. *Trans* fatty acids are unsaturated fatty acids that have hydrogen atoms attached on opposite sides of a double bond ("*trans*" means "across" in Latin). This

configuration is primarily the result of the hydrogenation process used to harden oils, although *trans* fatty acids are found naturally in some animal products. Thus, *trans* fatty acids would not be expected to be present in raw produce. Accordingly, if the November 17, 1999, proposed rule is finalized to require mandatory labeling of *trans* fat, the agency tentatively concludes that the footnote required in proposed § 101.45(a)(3)(iii) for raw fruits and vegetables should be revised to state: ''Most fruits and vegetables provide negligible amounts of saturated fat, *trans* fat, and cholesterol; avocados provide 0.5 g of saturated fat per oz.'' We invite comments that provide data on the trans fat content of raw fish (or cooked fish without the addition of any ingredients, e.g., fat, breading, or seasoning).

III. Identification of the 20 Most Frequently Consumed Raw Fruits, Vegetables, and Fish in the United States

A. Fruits and Vegetables

FDA is not proposing any changes in the list of the 20 most frequently consumed raw fruits and vegetables in § 101.44 because we are not aware of any new information suggesting that the listing be modified. Nevertheless, for ease of use and to be consistent with the food names in appendix C to part 101, we are proposing to revise § 101.44(a) and (b) by listing the items in alphabetical order and by using the plural form of the food name when the serving size is more than one unit. Thus, we are proposing to revise § 101.44(a) to read as follows: ''The 20 most frequently consumed raw fruits are: Apple, avocado (California), banana, cantaloupe, grapefruit, grapes, honeydew melon, kiwifruit, lemon, lime, nectarine, orange, peach, pear, pineapple, plums, strawberries, sweet cherries, tangerine, and watermelon.'' We are proposing to revise § 101.44(b) to read as follows: ''The 20 most frequently consumed raw vegetables are: Asparagus, bell pepper, broccoli, carrot, cauliflower, celery, cucumber, green (snap) beans, green cabbage, green onion, iceberg lettuce, leaf lettuce, mushrooms, onion, potato, radishes, summer squash, sweet corn, sweet potato, and tomato.''

B. Fish

FDA is proposing to make three changes to the listing of the 20 most frequently consumed raw fish. In the previous voluntary nutrition labeling rules, we used information provided by the National Fisheries Institute (NFI) to identify the most frequently consumed species of fish in the United States (59 FR 36379 at 36384 and 61 FR 42742 at 42743). However, we have obtained more recent information from various industry and government sources indicating that mackerel is sold in the United States primarily as bait and catfood rather than as fresh fish for human consumption (Ref. 2). Furthermore, NFI has reported to us that the consumption of fresh tuna and tilapia in the United States has surpassed the consumption of mackerel and whiting (Refs. 3 and 4). Thus, we are proposing to remove mackerel and whiting from the listing of the 20 most frequently consumed raw fish and to add tuna and tilapia to the list.

Next, we are proposing to collapse the three subspecies of salmon into two subspecies based on similar nutrient profiles (Refs. 5 and 7). In current appendix D to part 101, salmon is divided into three subspecies: Atlantic/coho, chum/pink, and sockeye. This was due primarily to differences in total fat content (i.e., 6 to 7 grams (g) of fat in Atlantic and coho, 4 g of fat in chum and pink, and 9 g of fat in sockeye) (59 FR 36379 at 36383). For this proposed rule, however, we have used updated data from the U.S. Department of Agriculture (USDA), National Nutrient Data Bank (NNDB) (Ref. 6), which is described in section IV.A.2 of this document, and determined that the nutrient profiles for Atlantic, coho, and sockeye salmon are very similar. Specifically, the data show a total fat content of 10 g for Atlantic and sockeye salmon and 9 g for coho salmon. Therefore, we are proposing to combine Atlantic, coho, and sockeye into one subgroup of salmon. Because the data show that chum and pink salmon maintain similar nutrient profiles, we are proposing to keep chum/pink as a second subgroup of salmon.

We are proposing to revise § 101.44(c) based on the changes discussed above and by listing the fish in alphabetical order to read as follows: ''The 20 most frequently consumed raw fish are: Blue crab, catfish, clams, cod, flounder/sole, haddock, halibut, lobster, ocean perch, orange roughy, oysters, pollock, rainbow trout, rockfish, salmon (Atlantic/coho/sockeye, chum/pink), scallops, shrimp, swordfish, tilapia, and tuna.''

IV. Updating the Nutrition Labeling Values for the 20 Most Frequently Consumed Raw Fruits, Vegetables, and Fish

We are proposing to revise the nutrition labeling values for the 20 most frequently consumed raw fruits, vegetables, and fish (proposed appendices C and D to part 101) to reflect newer or additional data for these foods that have been submitted or made available to the agency. FDA has considered whether this updated nutrition labeling information, as proposed, could be used on an interim basis prior to completion of the rulemaking. Because the agency believes that the proposed nutrition labeling values would not be misleading, we do not object to firms using these values prior to issuance of a final rule, provided that the nutrition information is presented in a manner consistent with this proposal. However, firms should be aware that a final rule on this issue may differ from this proposed rule.

Reference 7 provides complete documentation of the derivation of each nutrition labeling value for the fruits, vegetables, and fish covered in this proposal. The following sections (IV.A through IV.C) explain the specific proposed updates.

A. FDA Analysis of the Data

FDA considered the data from all of the sources identified in sections IV.B and IV.C of this document and used these data as the basis for deriving the proposed nutrition labeling values. To the extent possible (i.e., for those nutrients where sufficient data were available), we used the statistical methodology recommended in the ''FDA Nutrition Labeling Manual—A Guide for Developing and Using Data Bases'' (Ref. 8) to produce the nutrition labeling values. The recommended statistical method uses compliance calculations that take into account the variation of nutrients in foods. The nutrient content of foods varies according to inherent, environmental, and processing factors, and some nutrients are more variable than others. The FDA compliance calculations are based on one-sided 95 percent prediction intervals. Thus, the resulting nutrient values are less likely than mean values to overestimate class II nutrients (naturally occurring vitamins, minerals, protein, total carbohydrate, dietary fiber, unsaturated fat, and potassium) (§ 101.9(g)(4)(ii)), or to underestimate third group nutrients (calories, sugars, total fat, saturated fat, cholesterol, and sodium) (§ 101.9(g)(5)). In other words, the calculated values provide with 95 percent probability that the levels of class II nutrients will be at least 80 percent of the label value and that the levels of third group nutrients will not be more than 120 percent of the label value, as required by the compliance criteria in § 101.9(g)(4)(ii) and (g)(5).

Nevertheless, we frequently found in our analyses of the data that the mean

nutrient value and the value derived from compliance calculations rounded to the same nutrition labeling value. We also found, however, that when the sample size was small (e.g., three or fewer analytical data points), the values derived from compliance calculations sometimes resulted in a minimal amount or a complete absence of a nutrient in the food. In these cases, the mean value is more likely to represent the nutrient level. Thus, when it was more appropriate, we propose to use the mean nutrient value rather than the value derived by applying 95 percent prediction intervals, which is noted in the documentation (Ref. 7).

1. Nutrients Not Present in Particular Foods

No analytical data were available for some nutrients due to several well-known principles of food composition. As stated in the 1996 final rule (61 FR 42742 at 42756) and in the 1993 mandatory nutrition labeling final rules (58 FR 2079 at 2109, January 6, 1993), analysis is not needed for nutrients where reliable databases or scientific knowledge establish that a nutrient is not present in the product. Thus, for this proposal, as in the previous voluntary nutrition labeling rules (59 FR 36379 at 36383), we have assumed a zero value for the following nutrients: (1) Cholesterol in fruits and vegetables because cholesterol is found only in animal tissues, (2) saturated fat in all fruits and vegetables that have a zero total fat content because saturated fat is a component included in total fat, (3) dietary fiber in fish because dietary fiber is found only in plant materials, and (4) sugars in fish because sugars are not found (or are very low) in fish.

2. Data From USDA

When using USDA data to update the nutrition labeling values for this proposal, we obtained data directly from the NNDB, where possible (Ref. 6). The NNDB provides raw data that include a collection of statistical parameters representing either a single measurement or multiple measurements for nutrients in foods. USDA has compiled these data from various sources (e.g., government, academic, industry, and private laboratories). From these data, we can identify the number of samples, mean nutrient values, and estimates of variance that are necessary to complete compliance calculations in deriving the nutrition labeling values.

However, every food item in the NNDB does not always have a complete nutrient profile. When the NNDB did not have adequate data for nutrients needed for updating the nutrition labeling values, we used the values in the USDA Nutrient Database for Standard Reference (SR) (Ref. 9). The SR provides aggregated mean values for nutrients, which are primarily derived from data in the NNDB. For some foods, the SR presents a mean value for a nutrient, but the sample size is zero. In these cases, USDA has imputed the nutrient value from other sources, such as, from data for foods with a similar nutrient profile. For fish, when we were not able to obtain new or adequate data for a specific nutrient (e.g., vitamin A and vitamin C), either on the cooked or raw basis, we used the value from the SR for the appropriate cooked fish. The SR includes all the food composition data published in the 21 volumes of Agriculture Handbook No. 8 (USDA, 1976–1988) and its 4 supplements (USDA, 1990–1993). Since 1992, USDA has been publishing updated SR data electronically, which became accessible on the Internet for searching or downloading in 1996. However, the printed Agriculture Handbook No. 8 sections provide more extensive details on specific foods. For example, we have used information on the cooking procedure and yields of cooked fish contained in the 1991 supplement to Agriculture Handbook No. 8–15, ''Composition of Foods: Finfish and Shellfish Products; Raw, Processed, Prepared'' (Ref. 10), which is discussed in section IV.C.1 of this document.

3. Outlier Screening

For this proposed rule, we have completed outlier screening of the data using the Grubb's outlier screening method (Ref. 11). Outliers are unusually extreme data points in a distribution of data that are much lower or higher than the majority of the other data points. They are called ''influential observations'' because an outlier or outliers in a data set will skew the distribution of data so that the mean will be lower (with low outlier values) or higher (with high outlier values) than it would be for the majority of the data. In addition, the range (as a measure of distance) may give a very distorted picture of the variability of the data if outliers are included. Although some outlying observations may be legitimate values that are extreme, an outlier may be the result of imprecise measurement or an error in data entry. In developing our proposed nutrient values, we have taken a conservative approach to outliers and deleted those data points identified through outlier screening.

4. Calories, Calories From Fat, Sugars, and Total Carbohydrate

In developing our proposed nutrient values, we calculated calories and calories from fat based on the Atwater system for determining energy values for individual foods or food groups (i.e., specific factors) rather than using the general factors of 4, 4, and 9 calories per g for protein, total carbohydrate, and total fat, respectively. The Atwater energy factors are outlined in USDA Handbook No. 74, ''Energy Value of Foods—Basis and Derivation'' (Ref. 12). These specific factors take into account the physiological availability of energy for the basic food, and therefore, are more accurate. This is the method referred to in § 101.9(c)(1)(i)(A) for calculating the caloric content of foods. It is the same method used in the previous voluntary nutrition labeling rules (Ref. 5 to the 1996 final rule, 61 FR 42742) except that we are correcting a slight error in the food factors used for green onion and in the carbohydrate factor used for potato. The specific Atwater factors used for calculating calories and calories from fat for the fruits, vegetables, and fish in this proposal are as follows:

Food	Calories per gram		
	Protein	Carbohydrate	Fat
All fruits (except lemon, lime)	3.36	3.60	8.37
Lemon, lime	3.36	2.48	8.37
Mushroom	2.62	3.48	8.37
Potato, sweet potato	2.78	4.03	8.37
Carrot, onion, radish	2.78	3.84	8.37
Other vegetables	2.44	3.57	8.37
Finfish	4.27	NA	9.02
Shellfish	4.27	4.11	9.02

(Ref. 12)

After publication of the 1996 final rule, industry expressed to us that the calorie values for some of the fruits and vegetables appeared to be inconsistent with the label values for total fat, total carbohydrate, and protein. Upon review, we found slight errors in the sugars, total carbohydrate, calories, and calories from fat values in a few fruits and vegetables (as explained below) that are reflected in current appendix C to part 101.

First, we derived most of the sugars values for the fruits and vegetables in current appendix C to part 101 from the USDA Home Economics Research (HER) Report No. 48, ''Sugar Content of Selected Foods: Individual and Total Sugars'' (Ref. 13) because no other sugars data were available to us. While reviewing the values for this proposed update, we discovered an error in the total sugars value for cantaloupe, sweet cherries, tangerine, and celery in current appendix C to part 101. This error was due to an apparent miscalculation in converting the sugars per 100 g of product (as in HER Report No. 48) to the sugars per gram weight of the serving size for the product (as in current appendix C to part 101). Therefore, based on the corrected conversions, we are proposing to change the sugars value for cantaloupe from 11 g to 12 g, for sweet cherries from 19 g to 20 g, for tangerine from 12 g to 8 g, and for celery from 0 g to 1 g.

Second, after correcting the sugars value for cantaloupe and sweet cherries, we found that the sugars value was high compared with the total carbohydrate and dietary fiber values (i.e., the sugars value when added to dietary fiber exceeded total carbohydrate). Because sugars and dietary fiber are components of total carbohydrate, the value for total carbohydrate must be greater than or equal to the sum of the values for sugars and dietary fiber. The apparent discrepancies are because the values for total carbohydrate and dietary fiber were derived from different analytical samples than those used to derive the value for sugars. Therefore, we are proposing to adjust the total carbohydrate value for cantaloupe (from 12 g to 13 g) and sweet cherries (from 22 g to 23 g) to reflect the sum of the values for sugars and dietary fiber (Ref. 7). We consider this adjustment to be appropriate because the values for sugars and dietary fiber are determined by laboratory analysis, and therefore, are more accurate than the value for total carbohydrate, which is determined ''by difference'' (i.e., the weight remaining after subtracting the sum of the protein, fat, moisture, and ash from the total weight of the food (§ 101.9(c)(6))).

Third, the total carbohydrate value for tangerine, reflected in the current regulation, was based on the sum of the values for sugars (12 g) and dietary fiber (3 g), i.e., the total carbohydrate value was adjusted from 13 g (the original value, rounded) to 15 g (the sum of the values for sugars and dietary fiber) (Ref. 5 to the 1996 final rule, 61 FR 42742). However, because the sugars value for tangerine should have been 8 g (as explained previously in this section), the total carbohydrate value should not have been adjusted. Thus, we are proposing to change the total carbohydrate value for tangerine to the original value of 13 g (rounded) based on data submitted to the agency in 1992 by the Produce Marketing Association (Ref. 12 to the 1996 final rule, 61 FR 42742).

Fourth, we previously stated the following in the 1996 final rule:

> In order to have calories from fat consistent for a given total fat value, FDA derived calories from fat for fruits and vegetables from the rounded, rather than unrounded, total fat label value. The caloric equivalent for fat is 8.37 calories per g for fruits and vegetables. Thus, 0.5 g of fat is equivalent to 4.19 calories, and according to § 101.9(c)(1)(ii), ''* * * amounts less than 5 calories may be expressed as zero.'' As a result, Appendix C consistently lists 0 calories for 0.5 g of total fat. (61 FR 42742 at 42750).

However, in our current review of the calorie values, we found that this action (i.e., calculating calories from the rounded total fat label value) conflicts with § 101.9(c)(1)(i), which states,

> * * * Where either specific or general food factors are used, the factors shall be applied to the actual amount (i.e., before rounding) of food components (e.g., fat, carbohydrate, protein, or ingredients with specific food factors) present per serving.

Therefore, in addition to calculating calories on the unrounded basis for the foods for which we obtained new data (as described in sections IV.B and C of this document), we recalculated calorie values for all the remaining foods covered by this proposal based on the unrounded values for total fat, total carbohydrate, and protein (Ref. 7). As a result of these recalculations, we are proposing changes to the calorie or calories from fat values for orange, strawberries, tangerine, watermelon, asparagus, green (snap) beans, and tomato as shown in table 1 in section IV.B.9 of this document.

Reference 7 contains the complete documentation of the nutrition labeling values for each of the fruits, vegetables, and fish covered in this proposal. The documentation includes the actual (unrounded) values for total fat, total carbohydrate, and protein used to calculate calories and calories from fat for each food. For some foods in proposed appendices C and D, the label value for total fat may be the same quantitative amount, yet the value for calories from fat may differ (e.g., for a total fat label value of 0.5 g, the value for calories from fat may be 0 or 5). The reason for the discrepancy, as explained above in this section, is that we calculated calories from fat based on the unrounded amount of total fat, as required by § 101.9(c)(1)(i), rather than on the rounded label value for total fat.

B. Proposed Updates to the Nutrition Labeling of Raw Fruits and Vegetables

1. Avocado

The nutrition labeling values for avocado provided in the current regulations are based on 1989-1990 data from the Produce Marketing Association and 1993–1994 data for potassium, protein, and vitamin C from the California Avocado Commission (CAC). In proposed appendix C to part 101, we have used new data on the composition of avocados that the CAC compiled from 1993 to 1997 and submitted to the agency. These data are the most current available to the agency and the sampling design is the same for each of the 5 years, whereas it differs in the other data collections. Thus, we are proposing to update the nutrition labeling values for avocado by using the 1993–1997 CAC data, which we have subjected to FDA compliance calculations based on 95 percent prediction intervals (Ref. 1). Table 1 of this document shows the proposed changes in the nutrient values for avocado compared with those in the current regulations.

2. Grapefruit

In the 1994 proposed rule, we declared the serving size for grapefruit as ''1/2 medium (154 g/ 5.5 oz)'' (59 FR 36379 at 36391). We adopted the same serving size in the 1996 final rule; however, the oz equivalent was incorrectly printed as 5.3 oz (61 FR 42742 at 42761). Also, current appendix C to part 101 contains this misprint. Thus, we are proposing to correct this error and declare the serving size for grapefruit as ''1/2 medium (154 g/5.5 oz).''

3. Grapes

The nutrition labeling values for grapes that we originally provided in the 1991 final rule were based on data from the NNDB for ''American-type'' grapes. However, after publication of the 1991 final rule, USDA informed us that the grapes described as ''American-

type'' include varieties, such as concord, that are not generally consumed without processing and that the grapes described as ''European-type'' are the most common types of raw grapes consumed in the United States (59 FR 36379 at 36381). USDA stated further that it would be more appropriate for FDA to use data for ''European-type'' grapes as the type most frequently consumed. Therefore, in the 1996 final rule, we derived the nutrition labeling values based on data in the NNDB for ''European-type'' grapes, which we had subjected to FDA compliance calculations based on 95 percent prediction intervals.

Then in 1998, industry raised questions about the published serving size for raw grapes (i.e., 1 1/2 cups (138 g/4.9 oz)) and the corresponding nutrient values. Industry noted that a 138 g serving size for European grapes would fall between 3/4 cup and 1 cup, rather than equate to 1 1/2 cups. When FDA investigated these inquiries, we found that the nutrient data for European grapes were correctly used to calculate the nutrition labeling values, but we had inadvertently used the weight for American grapes to derive the serving size. According to the SR, the density of European grapes is 160 g per cup and the density of American grapes is 92 g per cup (Ref. 9). Based on these densities, the 1 1/2 cup-serving size is equivalent to 240 g for European grapes and 138 g for American grapes. Thus, the current regulatory serving size, which is supposed to reflect the weight of European grapes, is incorrect.

In proposed appendix C to part 101, we have used 1998 data on the composition of grapes that Fleishman-Hilliard, Inc., submitted to the agency on behalf of the California Table Grape Commission (CTGC) (Ref.14). Because the CTGC submission provides newer data, the serving size that we are proposing for grapes is based on the average g weight of the 12 samples in this submission (i.e., 168.2 g per cup), rather than on the density of 160 g per cup provided in the SR. Following the principles in § 101.9(b)(2)(iii) regarding bulk products, the serving size must be the amount in a household measure that most closely approximates the reference amount for the appropriate product category in § 101.12(b). Grapes fit in the product category ''All other fruits (except those listed as separate categories), fresh, canned, or frozen'' with a reference amount of 140 g. Based on the data for the 12 samples, the average weight of 1 cup is 168.2 g and the average weight of 3/4 cup is 126.15 g (Ref. 14). Because 126.15 g (3/4 cup) is closer than 168.2 g (1 cup) to the 140-g reference amount, we are proposing a new serving size of 3/4 cup (126 g/4.5 oz) for grapes. We have subjected the CTGC data to FDA compliance calculations based on 95 percent prediction intervals and used these data in deriving the proposed nutrition labeling values (Ref. 14). Table 1 of this document shows the proposed changes to the serving size and nutrient values for grapes compared with those in the current regulations.

4. Nectarine, Peach, and Plums

In the 1996 final rule, we derived the nutrition labeling values for nectarine, peach, and plums from data in the NNDB, which we had subjected to FDA compliance calculations based on 95 percent prediction intervals. In proposed appendix C to part 101, we have used 1998 data on the composition of nectarines, peaches, and plums that Fleishman-Hilliard, Inc., submitted to the agency on behalf of the California Tree Fruit Agreement (CTFA). The CTFA data were comprised of three composite samples for peaches, three composite samples for plums, and four composite samples for nectarines. However, each of the composite samples represents between 2 and 14 different varieties and a different share of the market for that particular fruit. Due to the small number of composite samples, the varying number of varieties in each composite sample, and the differences in how the samples represent the market, we chose to analyze the data for each of the three types of fruit by weighting the samples according to their market share and to use the resulting mean nutrient values (Ref. 15).

CTFA also provided information on the edible portion weights of peaches and plums that represent the majority of the market (Ref. 16). Based on this information, we are proposing to change the serving size for peach from ''1 medium (98 g/3.5 oz)'' to ''1 medium (147 g/5.3 oz)'' and for plums from ''2 medium (132 g/4.7 oz)'' to ''2 medium (151 g/5.4 oz).'' We are not proposing any change to the serving size for nectarine (i.e., ''1 medium (140 g/5.0 oz)'') because the CTFA data supported the current serving size.

Table 1 of this document shows the proposed changes in the nutrient values for these fruits and the proposed changes to the serving size for peach and plums compared with those in the current regulations.

5. Sweet Cherries

The nutrition labeling values for sweet cherries provided in the current regulations are based on 1990 data from PMA. In proposed appendix C to part 101, we have used 1996 data on the fat composition of raw sweet cherries that Technical Assessment Systems, Inc. (TAS), submitted to the agency on behalf of the California Cherry Advisory Board. Based on these newer data, which included 12 analytical samples that measured the total fat content of sweet cherries, TAS requested that the nutrition labeling value for total fat be changed from 0.5 g to 0 g. We reviewed the TAS data, confirmed that the suggested label value was derived correctly by using compliance calculations based on 95 percent prediction intervals, and used the TAS data in determining the proposed label value of 0 g for total fat (Ref. 17). We also propose to revise the total carbohydrate and sugars values as explained in section IV.A.4 of this document. Table 1 shows the proposed changes to the nutrient values for sweet cherries compared with those in the current regulations.

6. Carrot

In current appendix C to part 101, the serving size for carrot is declared as ''7″ long, 1 1/4″ diameter (78 g/2.8 oz).'' To be consistent with § 101.9(b)(2)(i) for products in discrete units and consistent with § 101.9(b)(5)(iv) in describing the individual unit, we are proposing to include ''1 carrot'' as part of the serving size statement, i.e., ''1 carrot, 7″ long, 1 1/4″ diameter (78 g/2.8 oz).''

7. Green Onion, Sweet Corn, and Sweet Potato

In the 1996 final rule, we derived the nutrition labeling values for raw green onion, sweet corn, and sweet potato by using the NNDB data available at that time. In proposed appendix C to part 101, we have used updated nutrient data from the NNDB for these raw vegetables to derive the proposed nutrition labeling values using compliance calculations based on 95 percent prediction intervals (Ref. 18). Table 1 of this document shows the proposed changes in the nutrient values for green onion, sweet corn, and sweet potato compared with those in the current regulations.

We also are proposing a correction to the serving size for sweet potato. In current appendix C to part 101, the serving size for sweet potato is declared as ''medium, 5″ long, 2″ diameter (130 g/4.6 oz).'' Consistent with § 101.9(b)(2)(i) for products in discrete units, we are proposing to include the number of units in the serving size statement for sweet potato (i.e., ''1 medium, 5″ long, 2″ diameter (130 g/4.6 oz).'')

8. Potato

The nutrition labeling values for potato that we provided in the 1996 final rule were based on 1983-1984 data from PMA. In proposed appendix C to part 101, we have used 2000 market basket data on the composition of potatoes that Ketchum submitted to the agency on behalf of the National Potato Promotion Board (NPPB). The NPPB nutrient data were comprised of three composite samples for each variety of red, russet, and white potatoes. However, according to the NPPB, each of these potato varieties represents a different proportion of the market (i.e., 12 percent for red, 70 percent for russet, and 18 percent for white (Ref. 19). Thus, NPPB requested and we agreed that the data should be weighted by the market share in deriving the nutrient values. After weighting the data, we subjected the values to FDA compliance calculations based on 95 percent prediction intervals to determine the proposed nutrition labeling values (Ref. 19). Table 1 of the document shows the proposed changes in the nutrient values for potato compared with those in the current regulations.

9. Summary of Proposed Changes for Fruits and Vegetables

Table 1 of this document shows a summary of the proposed changes to the nutrition labeling values for 19 raw fruits and vegetables and to the serving size for grapefruit, grapes, peach, plums, carrot, and sweet potato, as compared with those in the current regulations. We are not proposing any changes to the other values in current appendix C to part 101.

TABLE 1.—PROPOSED CHANGES TO THE NUTRITION LABELING INFORMATION FOR RAW FRUITS AND VEGETABLES

Food and Nutrient	Current Values		Proposed Values	
		% Daily Value		% Daily Value
Avocado, California:				
Calories	55		50	
Total Fat	5 g	8%	6 g	9%
Saturated Fat	1 g	5%	0.5 g	3%
Potassium	170 mg	5%	160 mg	5%
Total Carbohydrate	3 g	1%	2 g	1%
Dietary Fiber	3 g	12%	1 g	4%
Cantaloupe:				
Total Carbohydrate	12 g	4%	13 g	4%
Sugars	11 g		12 g	
Grapefruit:				
Serving Size	1/2 medium (154 g/5.3 oz)		1/2 medium (154 g/5.5 oz)	
Grapes:				
Serving Size	1 1/2 cups (138 g/4.9 oz)		3/4 cup (126 g/4.5 oz)	
Calories from Fat	10		0	
Total Fat	1 g	2%	0 g	0%
Sodium	0 g	0%	15 mg	1%
Potassium	270 mg	8%	240 mg	7%
Total Carbohydrate	24 g	8%	23 g	8%
Sugars	23 g		20 g	
Protein	1 g		0 g	
Vitamin A		2%		0%
Vitamin C		25%		2%
Iron		2%		0%
Nectarine:				
Total Fat	0.5 g	1%	0 g	0%
Potassium	300 mg	9%	290 mg	8%
Total Carbohydrate	16 g	5%	17 g	6%
Dietary Fiber	2 g	8%	1 g	4%
Sugars	12 g		13 g	
Vitamin A		4%		8%
Orange:				
Calories	70		80	
Peach:				
Serving Size	1 medium (98 g/3.5 oz)		1 medium (147 g/5.3 oz)	
Calories	40		70	
Potassium	190 mg	5%	260 mg	7%
Total Carbohydrate	10 g	3%	18 g	6%
Sugars	9 g		14 g	
Vitamin A		2%		8%
Vitamin C		10%		15%
Iron		0%		2%

TABLE 1.—PROPOSED CHANGES TO THE NUTRITION LABELING INFORMATION FOR RAW FRUITS AND VEGETABLES—Continued

Food and Nutrient	Current Values		Proposed Values	
		% Daily Value		% Daily Value
Plums:				
Serving Size	2 medium (132 g/4.7 oz)		2 medium (151 g/5.4 oz)	
Calories from Fat	10		0	
Total Fat	1 g	2%	0 g	0%
Potassium	220 mg	6%	250 mg	7%
Total Carbohydrate	19 g	6%	21 g	7%
Sugars	10 g		13 g	
Vitamin A		6%		8%
Vitamin C		20%		10%
Iron		0%		2%
Strawberries:				
Calories	45		50	
Sweet Cherries:				
Total Fat	0.5 g	1%	0 g	0%
Total Carbohydrate	22 g	7%	23 g	8%
Sugars	19 g		20 g	
Tangerine:				
Calories from Fat	0		5	
Total Carbohydrate	15 g	5%	13 g	4%
Sugars	12 g		8 g	
Watermelon:				
Calories	80		100	
Asparagus:				
Calories	25		20	
Carrot:				
Serving Size	7″ long, 1 1/4″ diameter		1 carrot, 7″ long, 1 1/4″ diameter	
Celery:				
Sugars	0 g		1 g	
Green (snap) Beans:				
Calories	25		20	
Green Onion:				
Sodium	5 mg	0%	10 mg	0%
Calcium		0%		2%
Potato:				
Calories	100		40	
Sodium	0 mg	0%	10 mg	0%
Potassium	720 mg	21%	650 mg	19%
Total Carbohydrate	26 g	9%	7 g	2%
Dietary Fiber	3 g	12%	4 g	16%
Sugars	3 g		2 g	
Protein	4 g		3 g	
Vitamin C		45%		40%
Iron		6%		8%
Sweet Corn:				
Calories	80		90	
Calories from Fat	10		20	
Total Fat	1 g	2%	2.5 g	4%
Potassium	240 mg	7%	250 mg	7%
Total Carbohydrate	18 g	6%	16 g	5%
Dietary Fiber	3 g	12%	2 g	8%
Protein	3 g		4 g	

TABLE 1.—PROPOSED CHANGES TO THE NUTRITION LABELING INFORMATION FOR RAW FRUITS AND VEGETABLES—Continued

Food and Nutrient	Current Values		Proposed Values	
		% Daily Value		% Daily Value
Sweet Potato:				
Serving Size	medium, 5″ long, 2″ diameter		1 medium, 5″ long, 2″ diameter	
Calories	130		140	
Potassium	350 mg	10%	340 mg	10%
Total Carbohydrate	33 g	11%	32 g	11%
Iron		2%		4%
Tomato:				
Calories from Fat	0		5	

C. Proposed Updates to the Nutrition Labeling of Raw Fish

For this proposal, we obtained new data for cooked Atlantic salmon and rainbow trout and for the following raw fish: Catfish (only on fat content), flounder/sole, orange roughy, coho and sockeye salmon, shrimp, swordfish, tilapia, and tuna. We also obtained new information on the cooking yield for mollusks, discovered a slight error in the raw weight used to calculate the nutrient values for finfish and crustaceans, and obtained new data on nutrient retention factors (described below). Therefore, in addition to updating the nutrient values based on new data, we reanalyzed the data for the remaining fish, when we used data for raw fish, and adjusted the nutrient values accordingly (Ref. 7).

1. Corrections for Cooking

a. Cooking yield for raw fish. The nutrition labeling values for fish provided in current appendix D to part 101 are based on the cooked edible portion (i.e., 84 g/3 oz) in accordance with § 101.45(a)(2). However, most of the nutrient data used to derive the nutrient values were available only for raw fish. When using data for raw fish, we first had to determine the raw fish weight that would yield 84 g (3 oz) of cooked fish. This adjusted raw fish weight would provide the basis upon which to derive the nutrient values. We calculated the raw weight by dividing the cooked weight (3 oz) by the appropriate cooking yield (i.e., a 75 percent cooking yield for finfish (based on dry heat cooking) and crustaceans (based on moist heat cooking) and a 60 percent cooking yield for mollusks (based on dry heat cooking)) (Refs. 10 and 20).

Therefore, we used data for 4 oz of raw finfish and crustaceans (3 oz ÷ 0.75) and 5 oz of raw mollusks (3 oz ÷ 0.60) to derive the nutrient values for 3 oz of cooked fish (59 FR 36379 at 36382 and 36383).

Since publication of the 1996 final rule, NFI has informed us that oysters are cooked predominately by dry heat while clams and scallops are cooked predominantly by moist heat (Ref. 21). Therefore, based on the cooking procedure and yields of cooked fish provided in Agriculture Handbook No. 8–15 (Ref. 10) for mollusks, we used a 50 percent cooking yield for clams and scallops (moist heat cooking) to determine the correct raw weights on which to base the nutrient data for this proposed rule. We continued to use a 60 percent cooking yield for oysters (dry heat cooking).

We also discovered in the previous data analyses for finfish and crustaceans that instead of using the precise raw weight of 112 g (84 g cooked weight ÷ 0.75 cooking yield) to calculate the nutrient values, we used an approximate raw weight of 110 g. We have corrected this error in proposed appendix D to part 101. Thus, when we used nutrient data for raw fish, we used 4 oz (112 g) of raw finfish and raw crustaceans (blue crab and shrimp), 5 oz (140 g) of raw oysters, and 6 oz (168 g) of raw clams and scallops to obtain nutrition labeling values for 3 oz (84 g) of cooked fish (Refs. 5 and 7).

b. *Nutrient retention factors.* In 1998, USDA issued an updated table of nutrient retention factors that is a major source of nutrient retention data for U.S. food composition databases (Ref. 22). The nutrient retention factors for the type of fish and corresponding cooking procedure are as follows:

Cooking Procedure/ Type of Fish	Nutrient Retention Factors			
	Potassium	Vitamin A	Vitamin C	Iron
Dry Heat:				
Finfish:				
Less than 5% fat	100%	90%	80%	100%
More than 5% fat	100%	85%	80%	100%
Shellfish:				
Oysters	100%	95%	85%	100%
Moist Heat:				
Shellfish (except oysters)	90%	90%	80%	90%

The NNDB and SR provide data for both cooked and raw varieties of fish, but for most varieties, vitamins A and C have very little data (0 to 3 analytical samples). Rather than apply nutrient retention factors to such small samples of data for raw fish, we have used vitamin A and vitamin C values from the SR, adjusted to the appropriate serving size, for cooked finfish (except catfish and tilapia) and cooked shellfish (except scallops) in proposed appendix D to part 101. Because we are using the vitamin A and vitamin C values for these cooked fish, the nutrient retention

factors do not need to be applied. For catfish, application of the nutrient retention factors to vitamins A and C does not change the current value of 0 percent DV. For tilapia, we used data obtained from industry on the raw fish and applied the appropriate nutrient retention factors (Ref. 23). The only SR data that were available for cooked scallops were for breaded and fried, a cooking method that greatly affects the nutrient profile of the fish. Thus, we used data for raw scallops and applied the appropriate nutrient retention factors for potassium, vitamin A, vitamin C, and iron. For blue crab, clams, and shrimp, we used data for the raw fish and applied the appropriate nutrient retention factors for potassium and iron.

2. Catfish

In proposed appendix D to part 101, we have used 1997 data on the fat composition of raw farm-raised catfish that ABC Research Corp. submitted to the agency on behalf of NFI. The nutrition labeling values that we provided for farm-raised catfish in the 1996 final rule were based on values derived from information published in ''Nutrients and Chemical Residues in One-to-Two Pound Mississippi Farm-Raised Channel Catfish,'' by Joyce Nettleton et al. (61 FR 42742 at 42753). For this proposal, we reviewed the newer NFI data consisting of 30 analytical samples that measured the total fat content of farm-raised catfish. We completed compliance calculations based on 95 percent prediction intervals and used these data in determining the proposed label value of 6 g for total fat (Ref. 24). We also have recalculated the values for calories (130) and calories from fat (60) based on the newer data for total fat. Table 2 of this document shows the proposed changes in the nutrient values for catfish compared with those in the current regulations.

3. Flounder/Sole, Rainbow Trout, Orange Roughy, Oysters, Salmon (Atlantic/Coho/Sockeye), Shrimp, and Swordfish

In proposed appendix D to part 101, we have used updated nutrient data from the NNDB for the following fish: Flounder/sole (raw); rainbow trout (cooked, dry heat, farmed); orange roughy (raw); oysters (raw); Atlantic salmon (cooked, farmed); coho salmon (raw, farmed); sockeye salmon (raw); shrimp (raw); and swordfish (raw). We subjected the data to FDA compliance calculations using 95 percent prediction intervals and used these data in deriving the proposed nutrition labeling values for these fish (Ref. 5).

4. Tilapia

In proposed appendix D to part 101, we have used 1999 data on the nutrient composition of raw tilapia that Southern Testing & Research Laboratories, Inc., submitted to the agency on behalf of the American Tilapia Association. The results of analytical testing done by Southern Testing & Research Laboratories, Inc., provided all the required nutrients but not potassium, which may be declared voluntarily. We completed compliance calculations based on 95 percent prediction intervals and determined that the mean values better represent the nutrient levels because of the small number of samples (n=3) analyzed (Ref. 23). To be consistent with our decision to include the optional nutrient, potassium, we have used data published in the journal article entitled ''Comparison of Processing Yield and Nutrient Composition of Cultured Nile Tilapia (Oreochromis niloticus) and Channel Catfish (Ictalurus punctatus)'' by Clement and Lovell to derive the potassium content of tilapia (Ref. 25).

5. Tuna

In proposed appendix D to part 101, we have used data from the NNDB and SR (Refs. 6 and 9) for yellowfin tuna. We selected yellowfin because the Tuna Research Foundation informed us that the species of tuna most commonly eaten fresh is yellowfin (Ref. 26). We subjected the data to FDA compliance calculations using 95 percent prediction intervals and used these data in deriving the proposed nutrition labeling values for tuna (Ref. 5).

6. Summary of Proposed Changes for Fish

Table 2 of this document shows the proposed changes in the nutrition labeling values for fish compared with those in the current regulations. As explained in section III.B of this document, the proposed changes include removal of mackerel and whiting and the addition of tilapia and tuna.

TABLE 2.—PROPOSED CHANGES TO THE NUTRITION LABELING INFORMATION FOR COOKED FISH

Food and Nutrient	Current Values		Proposed Values	
		% Daily Value		% Daily Value
Blue Crab:				
Cholesterol	90 mg	30%	95 mg	32%
Sodium	320 mg	13%	330 mg	14%
Potassium	360 mg	10%	300 mg	9%
Vitamin C		0%		4%
Calcium		8%		10%
Catfish:				
Calories	140		130	
Calories from Fat	80		60	
Total Fat	9 g	14%	6 g	9%
Clams:				
Calories	100		110	
Cholesterol	55 mg	18%	80 mg	27%
Potassium	530 mg	15%	470 mg	13%
Total Carbohydrate	0 g	0%	6 g	2%
Protein	22 g		17 g	
Calcium		6%		8%
Iron		60%		30%

TABLE 2.—PROPOSED CHANGES TO THE NUTRITION LABELING INFORMATION FOR COOKED FISH—Continued

Food and Nutrient	Current Values		Proposed Values	
		% Daily Value		% Daily Value
Cod:				
Calories from Fat	0		5	
Total Fat	0.5 g	1%	1 g	2%
Cholesterol	45 mg	15%	50 mg	17%
Sodium	60 mg	3%	55 mg	2%
Potassium	450 mg	13%	460 mg	13%
Vitamin C		0%		2%
Flounder/Sole:				
Calories from Fat	14		15	
Saturated Fat	0.5 g	3%	0 g	0%
Cholesterol	60 mg	20%	55 mg	18%
Sodium	90 mg	4%	100 mg	4%
Potassium	290 mg	8%	400 mg	11%
Protein	21 g		19 g	
Calcium		2%		0%
Iron		2%		0%
Haddock:				
Cholesterol	80 mg	27%	70 mg	23%
Sodium	85 mg	4%	75 mg	3%
Vitamin A		0%		2%
Halibut:				
Calories	110		120	
Calories from Fat	20		15	
Potassium	490 mg	14%	500 mg	14%
Vitamin A		2%		4%
Iron		4%		6%
Lobster:				
Vitamin A		0%		2%
Calcium		4%		6%
Ocean Perch:				
Saturated Fat	0 g	0%	0.5 g	3%
Vitamin C		0%		2%
Orange Roughy:				
Calories from Fat	10		5	
Potassium	330 mg	9%	340 mg	10%
Vitamin A		0%		2%
Calcium		0%		4%
Iron		0%		2%
Oysters:				
Total Fat	3.5 g	5%	4 g	6%
Cholesterol	115 mg	38%	80 mg	27%
Sodium	190 mg	8%	300 mg	13%
Potassium	390 mg	11%	220 mg	6%
Total Carbohydrate	4 g	1%	6 g	2%
Vitamin C		0%		6%
Pollock:				
Calories	90		100	
Potassium	360 mg	10%	370 mg	11%
Vitamin A		0%		2%
Rainbow Trout:				
Cholesterol	60 mg	20%	55 mg	18%
Protein	21 g		20 g	
Calcium		6%		8%
Rockfish:				
Calories from Fat	20		15	
Total Fat	2 g	3%	1.5 g	2%
Potassium	430 mg	12%	440 mg	13%
Calcium		0%		2%

TABLE 2.—PROPOSED CHANGES TO THE NUTRITION LABELING INFORMATION FOR COOKED FISH—Continued

Food and Nutrient	Current Values		Proposed Values	
		% Daily Value		% Daily Value
Salmon, Atlantic/Coho/Sockeye:	Atlantic & Coho/Sockeye		Atlantic/Coho/Sockeye	
Calories	160/ 180		190	
Calories from Fat	60/ 80		90	
Total Fat	7 g/ 9 g	11%/ 14%	10 g	15%
Saturated Fat	1 g/ 1.5 g	5%/ 8%	2 g	10%
Cholesterol	50 mg/ 75 mg	17%/ 25%	65 mg	22%
Sodium	50 mg/ 55 mg	2%/ 2%	65 mg	3%
Potassium	490 mg/ 320 mg	14%/ 9%	320 mg	9%
Protein	22 g/ 23 g		24 g	
Vitamin A		0%/ 4%		2%
Vitamin C		0%/ 0%		2%
Calcium		0%/ 0%		2%
Iron		4%/ 2%		2%
Salmon, Chum/Pink:				
Potassium	410 mg	12%	420 mg	12%
Calcium		0%		2%
Iron		2%		4%
Scallops:				
Calories	120		140	
Cholesterol	55 mg	18%	60 mg	20%
Sodium	260 mg	11%	310 mg	13%
Potassium	280 mg	8%	430 mg	12%
Total Carbohydrate	2 g	1%	5 g	2%
Protein	22 g		27 g	
Vitamin A		0%		2%
Vitamin C		0%		6%
Calcium		2%		4%
Shrimp:				
Calories	80		100	
Total Fat	1 g	2%	1.5 g	2%
Cholesterol	165 mg	55%	170 mg	57%
Sodium	190 mg	8%	250 mg	10%
Potassium	140 mg	4%	220 mg	6%
Protein	18 g		21 g	
Vitamin A		0%		4%
Vitamin C		0%		4%
Calcium		2%		6%
Iron		15%		6%
Swordfish:				
Calories	130		120	
Calories from Fat	35		50	
Total Fat	4.5 g	7%	6 g	9%
Saturated Fat	1 g	5%	1.5 g	8%
Protein	22 g		16 g	
Tilapia:				
Calories			110	
Calories from Fat			20	
Total Fat			2.5 g	4%
Saturated Fat			1 g	5%
Cholesterol			75 mg	25%
Sodium			30 mg	1%
Potassium			360 mg	10%
Total Carbohydrate			0 g	0%
Dietary Fiber			0 g	0%
Sugars			0 g	
Protein			22 g	
Vitamin A				0%
Vitamin C				2%
Calcium				0%
Iron				2%

TABLE 2.—PROPOSED CHANGES TO THE NUTRITION LABELING INFORMATION FOR COOKED FISH—Continued

Food and Nutrient	Current Values	Proposed Values	
	% Daily Value		% Daily Value
Tuna:			
Calories		130	
Calories from Fat		15	
Total Fat		1.5 g	2%
Saturated Fat		0 g	0%
Cholesterol		50 mg	17%
Sodium		40 mg	2%
Potassium		480 mg	14%
Total Carbohydrate		0 g	0%
Dietary Fiber		0 g	0%
Sugars		0 g	
Protein		26 g	
Vitamin A			2%
Vitamin C			2%
Calcium			2%
Iron			4%

V. Environmental Impact

We have determined under 21 CFR 25.30(k) that this action is of a type that does not individually or cumulatively have a significant effect on the human environment. Therefore, neither an environmental assessment nor an environmental impact statement is required.

VI. Preliminary Regulatory Impact Analysis

FDA has examined the economic implications of these proposed guidelines as required by Executive Order 12866. Executive Order 12866 directs agencies to assess all costs and benefits of available regulatory alternatives and, when regulation is necessary, to select regulatory approaches that maximize net benefits (including potential economic, environmental, public health and safety, and other advantages; distributive impacts; and equity). Executive Order 12866 classifies a rule as significant if it meets any one of a number of specified conditions, including: Having an annual effect on the economy of $100 million, adversely affecting a sector of the economy in a material way, adversely affecting competition, or adversely affecting jobs. A regulation also is considered a significant regulatory action if it raises novel legal or policy issues. FDA has determined that these proposed guidelines are not a significant regulatory action as defined by Executive Order 12866.

Title II of the Unfunded Mandates Reform Act of 1995 (Public Law 104–4) requires cost-benefit and other analyses before any rulemaking if the rule would include a ''Federal mandate that may result in the expenditure by State, local, and tribal governments, in the aggregate, or by the private sector, of $100 million or more (adjusted annually for inflation) in any one year.'' The current inflation-adjusted statutory threshold is $115 million. FDA has determined that this proposed rule containing nutrition labeling guidelines does not constitute a significant rule under the Unfunded Mandates Reform Act.

A. Costs of These Guidelines

The costs of a labeling regulation are the incremental administrative, analytical, redesign, and label inventory disposal costs associated with the regulatory action. Because FDA is providing nutrition values that retailers must use, we expect no analytical or other information costs. The typical sign, the most common means of labeling raw products, has an expected useful life of 6 months. This is well within the compliance period, so we also expect little to no inventory disposal costs.

Administrative and redesign costs depend on retail store behavior. The 1996 final rule had a 1-year compliance period. These guidelines propose compliance at the next applicable uniform compliance date (UCD), which is no sooner than 1 year after the final rule is published in the **Federal Register**. The redesign cost due to this proposed guidance depends crucially on the length of the compliance period: FDA assumes that, all other things equal, the longer the compliance period the lower the cost of implementing the proposed guidelines. Retail stores periodically redesign signs and displays. FDA has information that a normal redesign cycle of a product label is 2 years. This cycle may not apply to retail level signs, but it provides a basis on which to estimate the lifecycle of a display. We assume that some of the retail stores would have redesigned their displays before the effective date of compliance, lowering the redesign cost attributed to these proposed guidelines. FDA invites comments on the normal length of redesign time and cost associated with retail level signs or posters.

The most likely timeline of these guidelines is that they will be published during 2002. Therefore, the effective compliance date of these guidelines would be the next UCD of January 1, 2004, or between 1 and 2 years after the publication of the final guidelines. FDA will modify this analysis if the actual publication date differs from the one described here.

If the final compliance period is 18 months and companies redesign normal labels every 2 years, then 75 percent of companies could be expected to normally redesign their labels during the compliance period. FDA assumes that an informational display will be redesigned with less frequency than a product label since it has a smaller potential impact on the profitability of the food product. We assume a median display redesign cycle of 3 years, which implies that 50 percent of retailers would have redesigned their store displays between their publication and when the new guidelines take effect. A normal redesign still will incur cost associated with verifying that the design conforms to the new guidelines. FDA estimates an average cost of a complete redesign of $100 per store, and estimates that the partial redesign cost allocated to changing the values on the informational signs will be $50 per store, allocated evenly among the years 2002 and 2003.

Approximately 83,000 grocery stores fall under these compliance guidelines. This estimate is based on a Dunn and Bradstreet database search, where the total of 197,000 grocery stores was decreased by the 110,000 stores exempted by Congress since they have annual sales of less than $500,000. Seven thousand six hundred of the remaining stores did not have sales data available. Since 42 percent of the stores that have sales data had sales over $500,000, we assign 42 percent of the stores without sales data to the population subject to compliance. According to the last (1996) compliance survey, approximately 72 percent of stores (73.0 percent for raw fruits and vegetables and 71.2 percent for raw fish) adequately displayed acceptable signs. Although slightly down from the previous (1994) survey, compliance is still well over the 60 percent threshold that would trigger a mandatory rule proposal. FDA assumes that 72 percent or 59,923 stores—the same percentage as the most recent compliance survey—will continue to choose to follow the guidelines.

Table 3 of this document presents the total cost estimates based on the number of stores and the effect of the compliance date. The present value (as of January 2002) cost of complying with the guidelines (the sum of the values in row e in table 3) would be $4,066,000. Firms incur this cost every 4 years (if the nutrient values are revised). If the rate of increase in the cost of redesigning a sign is equal to the 7 percent discount rate used in this analysis, then the present value cost of each redesign would be the same. Because of the uncertainty in nutrition science, the effect of the UCD, the percent of stores following the guidelines, and the rate of cost increase, FDA does not estimate the cost of future guideline updates.

TABLE 3.—COMPLIANCE SCHEDULE AND COST

(a) Adoption Year	2002	2003	2004
(b) Number of Stores	14,980	14,980	29,962
(c) Cost ($) per Store	$50	$50	$100
(d) Total Cost ($) [b x c]	$749,025	$749,025	$2,996,200
(e) Present (Year 2002) Value, 7% discount rate	$749,025	$700,023	$2,616,997

B. Benefits of These Guidelines

In the Regulatory Impact Analysis (RIA) of the Proposed Rules to Amend the Food Labeling Regulations (56 FR 60856, November 27, 1991), FDA stated that the benefit of labeling of raw fruits, vegetables, and fish is a change in purchase behavior that would happen if the information presented was new to some consumers and was important to their consumption decisions. Since a majority of retail stores have displayed this type of information for several years, any incremental change from a single update of the list of foods affected or nutritional values is likely to be small and unmeasurable.

However, these guidelines as amended in the proposed rule would be voluntary; grocery stores would probably not choose to display signs with the updated nutrition information if they felt the information would have no impact. In addition, informational signs must be truthful, and without periodic updates the incremental errors that would build up might eventually erode the ability of these signs to help consumers choose products. This guidance is designed not to create an effective label, but to preserve the effectiveness of existing nutrition labels.

Truthful signs and placards can have an impact on consumer behavior. One of the studies used to estimate the impact of product information on consumer choice for the 1991 RIA was the Special Diet Alert study, or SDA. The SDA is relevant to this analysis because the mode of disseminating truthful and accurate nutrition information in the study, based in retail grocery stores in Baltimore and Washington, DC, was a store display similar to the ones recommended in these guidelines. According to SDA, the presence of a sign displaying nutrition information caused a modest switch by consumers to products with relatively large positive attributes (vitamins and minerals) and a modest switch away from products with relatively large negative attributes (fat and cholesterol). If these guidelines are not periodically revised in light of the best available nutrient data, FDA believes the modest beneficial effect they have on consumer behavior may steadily diminish.

VII. Initial Regulatory Flexibility Analysis

FDA has examined the economic implications of these proposed guidelines as required by the Regulatory Flexibility Act (5 U.S.C. 601–612). If a rule has a significant economic impact on a substantial number of small entities, the Regulatory Flexibility Act requires agencies to analyze regulatory options that would lessen the economic effect of the rule on small entities. FDA finds that these proposed guidelines would not have a significant economic impact on a substantial number of small entities.

The Small Business Administration (SBA) defines a grocery store as small if its annual sales are under $20 million. In the Dunn and Bradstreet search of grocery stores, 98 percent of stores with sales data available meet this definition. Not all stores must follow the guidelines: Stores with sales of $500,000 or less are exempt. Very small non-exempt stores (those of annual sales between $500,000 and $2,000,000) are not in compliance as a group in any of the compliance surveys. However, the percentage of very small non-exempt stores in compliance jumped over 5 percent for fruits and vegetables and just over 1 percent for fish in the latest (1996) survey.

Table 4 of this document presents the store-count percentage levels for stores of varying size. The 1996 compliance survey was not designed to discriminate between stores with sales over $20 million annually and stores with sales between $2 million and $20 million. However, the percentages in the second row are probably very good estimates for the compliance rate of stores considered small by the SBA standard, since so few stores have annual sales over $20 million.

The cost per store in the final column of table 4 of this document takes into account the percent compliance in each category and the varying date of compliance. For all categories, the average cost for a store that complies with the guidelines is $67.85, which is

the present value weighted average of the three different possible time periods and the either $50 or $100 in compliance costs. The average of the two compliance rates is 49.6 percent for stores in the smallest category (table 4, row 1), so the average cost per store for this group is $33.65 (.496 x 67.85). The equivalent average cost per store for table 4, row 2 is $51.70 (.762 x 67.85).

TABLE 4.—COMPLIANCE PERCENTAGES BY STORE SIZE AND COST PER STORE

Annual Sales ($)	Fruit and Vegetable Percent	Raw Fish Percent	Cost per Store
$500,000–$2 million	48.6%	50.5%	$33.65
Greater than $2 million	78.5%	73.9%	$51.70

In addition, the maximum cost for any one firm is $87.34, which is $100 discounted back 2 years at 7 percent for stores which wait until the latest possible date to comply with the guidelines. The smallest firm that could incur this cost is a single location store with sales of $500,000.01. The maximum cost per firm of this guidance is therefore, at most, 0.017 percent of annual revenue.

Both the per store averages and the maximum possible cost of the guidance for a single firm are very small, and will not impose a significant cost on even the smallest non-exempt grocery stores. FDA, therefore, certifies that these guidelines would not have a significant impact on a substantial number of small entities.

VIII. Paperwork Reduction Act of 1995

FDA tentatively concludes that the labeling requirements proposed in this document are not subject to review by the Office of Management and Budget because they do not constitute a ''collection of information'' under the Paperwork Reduction Act of 1995 (44 U.S.C. 3501–3520). Rather, the proposed nutrition labeling would be a ''public disclosure of information originally supplied by the Federal government to the recipient for the purpose of disclosure to the public'' (5 CFR 1320.3(c)(2)).

IX. Effective Date

FDA periodically establishes, by final rule in the **Federal Register**, uniform effective dates for compliance with food labeling regulations (see, e.g., the **Federal Register** of December 23, 1998 (63 FR 71015)). We are proposing that any final rule that may issue based on this proposal become effective in accordance with the uniform effective date for compliance with food labeling requirements, which is not sooner than 1 year following publication of the final rule. However, FDA will not object to voluntary compliance immediately upon publication of the final rule.

X. Comments

Interested persons may submit to the Dockets Management Branch (address above) written comments regarding this proposal by June 3, 2002. Two copies of any comments are to be submitted, except that individuals may submit one copy. Submit electronic comments to http://www.fda.gov/dockets/ecomments. Identify all comments with the docket number found in brackets in the heading of this document. You may review public dockets containing comments to this proposal in the Dockets Management Branch between 9 a.m. and 4 p.m., Monday through Friday.

XI. References

The following references have been placed on display in the Dockets Management Branch (address above) and may be seen by interested persons between 9 a.m. and 4 p.m., Monday through Friday.

1. O'Neill, K. R., ''Statistical Derivation of Raw Avocado Nutrition Label for Appendix C to Part 101: Nutrition Facts for Raw Fruits and Vegetables,'' Center for Food Safety and Applied Nutrition, FDA, August 14, 2001.

2. Memorandum to file, Tom O'Brien, FDA, February 21, 1996.

3. Memorandum of phone conversation between Lee Weddig, National Fisheries Institute and Susan J. Brecher, FDA, June 9, 1997.

4. Letter from Lee J. Weddig, National Fisheries Institute to Susan Brecher, FDA, June 12, 1997.

5. O'Neill, K. R., ''Statistical Derivation of Nutrition Labeling from USDA Data for Appendix D to Part 101: Nutrition Facts for Cooked Fish,'' Center for Food Safety and Applied Nutrition, FDA, May 9, 2001.

6. U.S. Department of Agriculture, National Nutrient Data Bank, maintained at the Nutrient Data Laboratory, Agricultural Research Service, Beltsville Human Nutrition Research Center, Beltsville, MD.

7. LeGault, L. A. and S. J. Brecher, ''Documentation for the Proposed Nutrition Labeling Values for the 20 Most Frequently Consumed Raw Fruits, Vegetables, and Fish,'' Center for Food Safety and Applied Nutrition, FDA, August 2001.

8. Bender, M. M., J. I. Rader, and F. D. McClure, ''Guidance for Industry, FDA Nutrition Labeling Manual—A Guide for Developing and Using Databases,'' Center for Food Safety and Applied Nutrition, FDA, 1998, available on the Internet at http://vm.cfsan.fda.gov/dms/nutrguid.html.

9. U.S. Department of Agriculture, Agricultural Research Service, USDA Nutrient Database for Standard Reference, Release 14, 2001, available on the Internet at USDA's Nutrient Data Laboratory Home Page, http://www.nal.usda.gov/fnic/foodcomp.

10. U.S. Department of Agriculture, ''Composition of Foods: Finfish and Shellfish Products; Raw, Processed, Prepared,'' Agriculture Handbook No. 8–15, 1991 Supplement, pp. 10–11.

11. Grubbs, F. E., ''Procedures for Detecting Outlying Observations in Samples,'' Technometrics, vol. 11, no.1, pp. 1–21, 1969.

12. Merrill, A. L. and B. K. Watt, ''Energy Value of Foods—Basis and Derivation,'' Agriculture Handbook No. 74, U.S. Department of Agriculture, revised 1973, pp. 24–25, available on the Internet at http://www.nal.usda.gov/fnic/foodcomp/Data/Classics/index.html.

13. Matthews, R. H., P. R. Pehrsson, and M. Farhat-Sabet, ''Sugar Content of Selected Foods: Individual and Total Sugars,'' Home Economics Research Report No. 48, U.S. Department of Agriculture, September 1987, available on the Internet at http://www.nal.usda.gov/fnic/foodcomp/Data/index.html#sugar.

14. O'Neill, K. R., ''Statistical Derivation of Raw Grapes Nutrition Label for Appendix C to Part 101: Nutrition Facts for Raw Fruits and Vegetables,'' Center for Food Safety and Applied Nutrition, FDA, August 6, 2001.

15. O'Neill, K. R., ''Statistical Derivation of Nutrition Mean Values from California Tree Fruit Agreement Data for Raw Nectarines, Peaches, and Plums,'' Center for Food Safety and Applied Nutrition, FDA, May 9, 2001.

16. Memorandum to file, Lori A. LeGault, FDA, April 26, 2001.

17. Letter from F. Edward Scarbrough, FDA, to Tom Tjerandsen, representative of the California Cherry Advisory Board, June 18, 1997.

18. O'Neill, K. R., ''Statistical Derivation of Raw Vegetable Nutrition Labels from USDA Data for Appendix C to Part 101: Nutrition Facts for Raw Fruits and Vegetables,'' Center for Food Safety and Applied Nutrition, FDA, April 18, 2001.

19. O'Neill, K. R., ''Statistical Derivation of Raw Potato Nutrition Label for Appendix C to Part 101: Nutrition Facts for Raw Fruits and Vegetables,'' Center for Food Safety and Applied Nutrition, FDA, August 8, 2001.

20. Memorandum of phone conversation between Jacob Exler, U.S. Department of Agriculture, and FDA, March 1, 1993.

21. Memorandum of phone conversation between Richard Gutting, National Fisheries Institute, and Susan J. Brecher, FDA, October 2, 1998.

22. U.S. Department of Agriculture, USDA Table of Nutrient Retention Factors, Release 4, 1998, available on the Internet at http://www.nal.usda.gov/fnic/foodcomp/Data/index.html.

23. O'Neill, K. R., ''Statistical Derivation of Raw Tilapia Nutrition Label for Appendix D to Part 101: Nutrition Facts for Cooked Fish,'' Center for Food Safety and Applied Nutrition, FDA, April 18, 2001.

24. O'Neill, K. R., ''Nutrition Label Values for Total Fat, Calories and Calories From Fat in Farm-Raised Catfish,'' Center for Food Safety and Applied Nutrition, FDA, May 14, 2001.

25. Clement, S. and R. T. Lovell, ''Comparison of Processing Yield and Nutrient Composition of Cultured Nile Tilapia (Oreochromis niloticus) and Channel Catfish (Ictalurus punctatus),'' Aquaculture, 119:299–310, 1994.

26. Memorandum of phone conversation between Randi Thomas, Tuna Research Foundation, and Susan J. Brecher, FDA, February 11, 1998.

List of Subjects in 21 CFR Part 101

Food labeling, Nutrition, Reporting and recordkeeping requirements.

Therefore, under the Federal Food, Drug, and Cosmetic Act and under the authority delegated to the Commissioner of Food and Drugs, FDA proposes to amend 21 CFR part 101 as follows:

PART 101—FOOD LABELING

1. The authority citation for 21 CFR part 101 continues to read as follows:

Authority: 15 U.S.C. 1453, 1454, 1455; 21 U.S.C. 321, 331, 342, 343, 348, 371; 42 U.S.C. 243, 264, 271.

2. Section 101.44 is revised to read as follows:

§ 101.44 What are the 20 most frequently consumed raw fruits, vegetables, and fish in the United States?

(a) The 20 most frequently consumed raw fruits are: Apple, avocado (California), banana, cantaloupe, grapefruit, grapes, honeydew melon, kiwifruit, lemon, lime, nectarine, orange, peach, pear, pineapple, plums, strawberries, sweet cherries, tangerine, and watermelon.

(b) The 20 most frequently consumed raw vegetables are: Asparagus, bell pepper, broccoli, carrot, cauliflower, celery, cucumber, green (snap) beans, green cabbage, green onion, iceberg lettuce, leaf lettuce, mushrooms, onion, potato, radishes, summer squash, sweet corn, sweet potato, and tomato.

(c) The 20 most frequently consumed raw fish are: Blue crab, catfish, clams, cod, flounder/sole, haddock, halibut, lobster, ocean perch, orange roughy, oysters, pollock, rainbow trout, rockfish, salmon (Atlantic/coho/sockeye, chum/pink), scallops, shrimp, swordfish, tilapia, and tuna.

3. Amend § 101.45 by revising the section heading and paragraph (a)(3)(iii) and by adding paragraph (a)(3)(iv) to read as follows:

§ 101.45 What are the guidelines for the voluntary nutrition labeling of raw fruits, vegetables, and fish?

(a) * * *

(3) * * *

(iii) When retailers provide nutrition labeling information for more than one raw fruit or vegetable on signs or posters or in brochures, notebooks, or leaflets, the listings for saturated fat and cholesterol may be omitted from the charts or individual nutrition labels if a footnote states that most fruits and vegetables provide negligible amounts of these nutrients, but that avocados contain 0.5 gram (g) of fat per ounce (e.g., ''Most fruits and vegetables provide negligible amounts of saturated fat and cholesterol; avocados provide 0.5 g of saturated fat per ounce''). The footnote also may contain information about the polyunsaturated and monounsaturated fat content of avocados.

(iv) When retailers provide nutrition labeling information for more than one raw fish on signs or posters or in brochures, notebooks, or leaflets, the listings for dietary fiber and sugars may be omitted from the charts or individual nutrition labels if the following footnote is used, ''Fish provide negligible amounts of dietary fiber and sugars.''

* * * * *

4. Appendixes C and D to part 101 are revised to read as follows:

* * * * *

BILLING CODE 4160–01–S

Appendix C to Part 101.–Nutrition Facts for Raw Fruits and Vegetables

Nutrition facts [1] for raw fruits and vegetables edible portion	Calories	Calories from fat	Total Fat		Saturated Fat		Cholesterol		Sodium		Potassium		Total Carbohydrate		Dietary Fiber		Sugars	Protein	Vitamin A	Vitamin C	Calcium	Iron
			(g)	%DV	(g)	%DV	(mg)	%DV	(mg)	%DV	(mg)	%DV	(g)	%DV	(g)	%DV	(g)	(g)	%DV	%DV	%DV	%DV
Apple, 1 medium (154 g/5.5 oz)	80	0	0	0	0	0	0	0	0	0	170	5	22	7	5	20	16	0	2	8	0	2
Avocado, California, 1/5 medium (30 g/1.1 oz)	50	45	6	9	0.5	3	0	0	0	0	160	5	2	1	1	4	0	1	0	4	0	0
Banana, 1 medium (126 g/4.5 oz)	110	0	0	0	0	0	0	0	0	0	400	11	29	10	4	16	21	1	0	15	0	2
Cantaloupe, 1/4 medium (134g/4.8 oz)	50	0	0	0	0	0	0	0	25	1	280	8	13	4	1	4	12	1	100	80	2	2
Grapefruit, 1/2 medium (154g/5.5 oz)	60	0	0	0	0	0	0	0	0	0	230	7	16	5	6	24	10	1	15	110	2	0
Grapes, 3/4 cup (126 g/4.5 oz)	90	0	0	0	0	0	0	0	15	1	240	7	23	8	1	4	20	0	0	2	2	0
Honeydew Melon, 1/10 medium melon (134 g/4.8 oz)	50	0	0	0	0	0	0	0	35	1	310	9	13	4	1	4	12	1	2	45	0	2
Kiwifruit, 2 medium (148 g/5.3oz)	100	10	1	2	0	0	0	0	0	0	480	14	24	8	4	16	16	2	2	240	6	4
Lemon, 1 medium (58 g/2.1 oz)	15	0	0	0	0	0	0	0	5	0	90	3	5	2	1	4	1	0	0	40	2	0
Lime, 1 medium (67 g/2.4 oz)	20	0	0	0	0	0	0	0	0	0	75	2	7	2	2	8	0	0	0	35	0	0
Nectarine, 1 medium (140 g/5.0 oz)	70	0	0	0	0	0	0	0	0	0	290	8	17	6	1	4	13	1	8	15	0	2
Orange, 1 medium (154 g/5.5 oz)	80	0	0	0	0	0	0	0	0	0	260	7	21	7	7	28	14	1	2	130	6	2
Peach, 1 medium (147 g/5.3 oz)	70	0	0	0	0	0	0	0	0	0	260	7	18	6	2	8	14	1	8	15	0	2
Pear, 1 medium (166 g/5.9 oz)	100	10	1	2	0	0	0	0	0	0	210	6	25	8	4	16	17	1	0	10	2	0
Pineapple, 2 slices, 3" diameter, 3/4" thick (112 g/4 oz)	60	0	0	0	0	0	0	0	10	0	115	3	16	5	1	4	13	1	0	25	2	2
Plums, 2 medium (151 g/5.4 oz)	80	0	0	0	0	0	0	0	0	0	250	7	21	7	2	8	13	1	8	10	0	2
Strawberries, 8 medium (147g/5.3 oz)	50	0	0	0	0	0	0	0	0	0	270	8	12	4	4	16	8	1	0	160	2	4
Sweet cherries, 21 cherries; 1 cup (140 g/5.0 oz)	90	0	0	0	0	0	0	0	0	0	300	9	23	8	3	12	20	2	2	15	2	2
Tangerine, 1 medium (109 g/3.9 oz)	50	5	0.5	1	0	0	0	0	0	0	180	5	13	4	3	12	8	1	0	50	4	0
Watermelon, 1/18 medium melon; 2 cups diced pieces (280 g/10.0 oz)	100	0	0	0	0	0	0	0	10	0	230	7	27	9	2	8	25	1	20	25	2	4

Appendix C to Part 101.—Nutrition Facts for Raw Fruits and Vegetables—Continued

Nutrition facts [1] for raw fruits and vegetables edible portion	Calories	Calories from fat	Total Fat		Saturated Fat		Cholesterol		Sodium		Potassium		Total Carbohydrate		Dietary Fiber		Sugars	Protein	Vitamin A	Vitamin C	Calcium	Iron
			(g)	%DV	(g)	%DV	(mg)	%DV	(mg)	%DV	(mg)	%DV	(g)	%DV	(g)	%DV	(g)	(g)	%DV	%DV	%DV	%DV
Asparagus, 5 spears (93 g/3.3 oz)	20	0	0	0	0	0	0	0	0	0	230	7	4	1	2	8	2	2	10	15	2	2
Bell pepper, 1 medium (148 g/5.3 oz)	30	0	0	0	0	0	0	0	0	0	270	8	7	2	2	8	4	1	8	190	2	2
Broccoli, 1 medium stalk (148 g/5.3 oz)	45	0	0.5	1	0	0	0	0	55	2	540	15	8	3	5	20	3	5	15	220	6	6
Carrot, 1 carrot, 7" long, 1 1/4" diameter (78 g/2.8 oz)	35	0	0	0	0	0	0	0	40	2	280	8	8	3	2	8	5	1	270	10	2	0
Cauliflower, 1/6 medium head (99 g/3.5 oz)	25	0	0	0	0	0	0	0	30	1	270	8	5	2	2	8	2	2	0	100	2	2
Celery, 2 medium stalks (110 g/3.9 oz)	20	0	0	0	0	0	0	0	100	4	350	10	5	2	2	8	1	1	2	15	4	2
Cucumber, 1/3 medium (99 g/3.5 oz)	15	0	0	0	0	0	0	0	0	0	170	5	3	1	1	4	2	1	4	10	2	2
Green (snap) beans, 3/4 cup cut (83 g/3.0 oz)	20	0	0	0	0	0	0	0	0	0	200	6	5	2	3	12	2	1	4	10	4	2
Green cabbage, 1/12 medium head (84 g/ 3.0 oz)	25	0	0	0	0	0	0	0	20	1	190	5	5	2	2	8	3	1	0	70	4	2
Green onion, 1/4 cup chopped (25 g/0.9 oz)	10	0	0	0	0	0	0	0	10	0	70	2	2	1	1	4	1	0	2	8	2	0
Iceberg lettuce, 1/6 medium head (89 g/ 3.2 oz)	15	0	0	0	0	0	0	0	10	0	120	3	3	1	1	4	2	1	4	6	2	2
Leaf lettuce, 1 1/2 cups shredded (85 g/ 3.0 oz)	15	0	0	0	0	0	0	0	30	1	230	7	4	1	2	8	2	1	40	6	4	0
Mushrooms, 5 medium (84 g/3.0 oz)	20	0	0	0	0	0	0	0	0	0	300	9	3	1	1	4	0	3	0	2	0	2
Onion, 1 medium (148 g/5.3 oz)	60	0	0	0	0	0	0	0	5	0	240	7	14	5	3	12	9	2	0	20	4	2
Potato, 1 medium (148 g/5.3 oz)	40	0	0	0	0	0	0	0	10	0	650	19	7	2	4	16	2	3	0	40	2	8
Radishes, 7 radishes (85 g/3.0 oz)	15	0	0	0	0	0	0	0	25	1	230	7	3	1	0	0	2	1	0	30	2	0
Summer squash, 1/2 medium (98 g/3.5oz)	20	0	0	0	0	0	0	0	0	0	260	7	4	1	2	8	2	1	6	30	2	2
Sweet corn, kernels from 1 medium ear (90g/ 3.2 oz)	90	20	2.5	4	0	0	0	0	0	0	250	7	16	5	2	8	5	4	2	10	0	2
Sweet Potato, 1 medium, 5" long, 2"diameter (130 g/ 4.6 oz)	140	0	0	0	0	0	0	0	45	2	340	10	32	11	4	16	7	2	440	30	2	4
Tomato, 1 medium (148 g/5.3 oz)	35	5	0.5	1	0	0	0	0	5	0	360	10	7	2	1	4	4	1	20	40	2	2

[1] Raw, edible weight portion. Percent Daily Values (%DV) are based on a 2,000 calorie diet.

Appendix D to Part 101.–Nutrition Facts for Cooked Fish

Nutrition facts [1] fish (84 g/3 oz)	Calories	Calories from fat	Total Fat		Saturated Fat		Cholesterol		Sodium		Potassium		Total Carbohydrate		Dietary Fiber		Sugars	Protein	Vitamin A	Vitamin C	Calcium	Iron
			(g)	%DV	(g)	%DV	(mg)	%DV	(mg)	%DV	(mg)	%DV	(g)	%DV	(g)	%DV	(g)	(g)	%DV	%DV	%DV	%DV
Blue crab	100	10	1	2	0	0	95	32	330	14	300	9	0	0	0	0	0	20	0	4	10	4
Catfish	130	60	6	9	2	10	50	17	40	2	230	7	0	0	0	0	0	17	0	0	0	0
Clams, about 12 small	110	15	1.5	2	0	0	80	27	95	4	470	13	6	2	0	0	0	17	10	0	8	30
Cod	90	5	1	2	0	0	50	17	55	2	460	13	0	0	0	0	0	20	0	2	2	2
Flounder/sole	100	15	1.5	2	0	0	55	18	100	4	400	11	0	0	0	0	0	19	0	0	0	0
Haddock	100	10	1	2	0	0	70	23	75	3	340	10	0	0	0	0	0	21	2	0	2	6
Halibut	120	15	2	3	0	0	35	12	60	3	500	14	0	0	0	0	0	23	4	0	4	6
Lobster	80	0	0.5	1	0	0	60	20	320	13	300	9	1	0	0	0	0	17	2	0	6	2
Ocean perch	110	20	2	3	0.5	3	50	17	95	4	290	8	0	0	0	0	0	21	0	2	10	6
Orange roughy	80	5	1	2	0	0	20	7	70	3	340	10	0	0	0	0	0	16	2	0	4	2
Oysters, about 12 medium	100	35	4	6	1	5	80	27	300	13	220	6	6	2	0	0	0	10	0	6	6	45
Pollock	100	10	1	2	0	0	80	27	110	5	370	11	0	0	0	0	0	20	2	0	0	2
Rainbow trout	140	50	6	9	2	10	55	18	35	1	370	11	0	0	0	0	0	20	4	4	8	2
Rockfish	100	15	1.5	2	0	0	40	13	70	3	440	13	0	0	0	0	0	21	4	0	2	2
Salmon, Atlantic/Coho/Sockeye	190	90	10	15	2	10	65	22	65	3	320	9	0	0	0	0	0	24	2	2	2	2
Salmon, Chum/Pink	130	35	4	6	1	5	70	23	65	3	420	12	0	0	0	0	0	22	2	0	2	4
Scallops, about 6 large or 14 small	140	10	1	2	0	0	60	20	310	13	430	12	5	2	0	0	0	27	2	6	4	2
Shrimp	100	10	1.5	2	0	0	170	57	250	10	220	6	0	0	0	0	0	21	4	4	6	6
Swordfish	120	50	6	9	1.5	8	40	13	100	4	310	9	0	0	0	0	0	16	2	2	0	4
Tilapia	110	20	2.5	4	1	5	75	25	30	1	360	10	0	0	0	0	0	22	0	2	0	2
Tuna	130	15	1.5	2	0	0	50	17	40	2	480	14	0	0	0	0	0	26	2	2	2	4

[1] Cooked, edible weight portion. Percent Daily Values (%DV) are based on a 2,000 calorie diet.

Dated: December 26, 2001.

Margaret M. Dotzel,

Associate Commissioner for Policy.

[FR Doc. 02–6709 Filed 3–19–02; 8:45 am]

BILLING CODE 4160–01–C

DEPARTMENT OF DEFENSE

Office of the Secretary

32 CFR Part 179

Development of a Munitions Response Site Prioritization Protocol

AGENCY: Office of the Deputy Under Secretary of Defense (Installations & Environment), DoD.

ACTION: Advanced notice of proposed rulemaking.

SUMMARY: In response to Section 311 of the Fiscal Year 2002 National Defense Authorization Act, the Office of the Deputy Under Secretary of Defense (Installations & Environment), U.S. Department of Defense (DoD), announces its intention to develop a proposed site prioritization protocol for assigning to each defense site (hereinafter, munitions response site) a relative priority for response activities related to unexploded ordnance, discarded military munitions, and munitions constituents. Section 311 lists specific factors to be included in the protocol. DoD is requesting input from interested parties on: These factors; any additional factors to consider in developing a site prioritization protocol; how the proposed protocol should incorporate such factors as they relate to safety and environmental hazards; and recommendations on any existing prioritization methods, models, or tools that should be evaluated. DoD will also request comments on the proposed site prioritization protocol when it is available for review later this year.

DATES: Suggestions are requested through May 20, 2002.

ADDRESSES: Written suggestions on factors to consider in the development of the site prioritization protocol should be sent to: United States Department of Defense, Office of the Deputy Under Secretary of Defense (I&E)/CL, ATTN: Proposed Site Prioritization Protocol, 3400 Defense Pentagon, Room 3C765, Washington, DC 20301–3400.

This address must be used when submitting input by U.S. Postal Service Express Mail. Input will also be accepted via electronic e-mail at *https://www.denix.osd.mil/MMRP.*

FOR FURTHER INFORMATION CONTACT: Patricia Ferrebe, 703–695–6107. Information regarding the schedule for developing the proposed site prioritization protocol, along with relevant background information, is available on the DENIX web site at *https://www.denix.osd.mil./MMRP.*

SUPPLEMENTARY INFORMATION: Section 311 of the Fiscal Year 2002 National Defense Authorization Act requires the DoD to develop, in consultation with representatives of the States and Indian Tribes, a proposed and final protocol for assigning to each defense site (munitions response site) a relative priority for response activities based on the overall conditions at each site. Section 311 provides for public notice and comment on the proposed protocol; requires that the proposed protocol be available for public comment on or before November 30, 2002; and directs DoD to issue a final protocol to be applied to defense sites listed in the Department's munitions response site inventory. As an initial step in developing the protocol, DoD seeks public input early in the development process prior to the public's opportunity to review and comment on the proposed protocol in November. DoD will also seek input from State, Tribal, EPA, and Federal Land Managers. DoD will consider this input during development of the proposed protocol.

Based on the requirements above, DoD intends to accomplish the following overall objectives with respect to development of a site prioritization protocol for munitions response sites:

- Prepare, in consultation with the States, and Indian Tribes, a proposed and final protocol per the requirements in Section 311 of the Fiscal Year 2002 National Defense Authorization Act.
- Publish the proposed protocol and provide a formal 60-day public comment period.
- Apply the final protocol to munitions response sites listed on its inventory.

Section 311 lists specific factors that may be considered when assigning a relative priority to munitions response sites. These factors may include:

- Whether there are known, versus suspected, unexploded ordnance, discarded military munitions, or munitions constituents on all or any portion of the defense site and the types of unexploded ordnance, discarded military munitions, or munitions constituents preset or suspected to be present.
- Whether public access to the defense site is controlled, and the effectiveness of these controls.
- The potential for direct human contact with exploded ordnance, discarded military munitions, or munitions constituents at the defense site and evidence of people entering the site.
- Whether a response action has been or is being undertaken at the defense site under the Formerly Used Defense Sites program or other program.
- The planned or mandated dates for transfer of the defense site from military control.
- The extent of any documented incidents involving unexploded ordnance, discarded military munitions, or munitions constituents at or from the defense site, including incidents involving explosions, discoveries, injuries, reports, and investigations.
- The potential for drinking water contamination or the release for munitions constituents into the air.
- The potential for destruction of sensitive echo systems and damage to natural resources. To better understand public concerns with regard to munitions response sites, DoD is soliciting early public input on:
- Additional factors to be considered.
- Existing prioritization methods.
- Other comments for developing the prioritization protocol.

Background

To ensure their readiness to protect and defend our nation, our Military forces conduct live-fire training and testing with weapon systems at ranges throughout the United States. As a result, some properties that DoD has historically used to meet its live-fire training and testing requirements have been found or are suspected to contain unexploded ordnance, discarded military munitions, or munitions constituents. This is the situation on many properties where DoD no longer plans to use military munitions.

DoD's challenge on these munitions response sites is to: (1) Protect human health and the environment; (2) identify where and how much of this material is present at munitions response sites; (3) set priorities for conducting response actions at these sites; and (4) conduct necessary response actions for these sites. To address these and other challenges, DoD is developing a comprehensive program to address munitions—response sites.

Relevant Definitions

Section 311 defines key term that delineate DoD's program to address munitions response sites. These terms are:

''Defense site'' applies to locations that are or were owned by, leased to, or otherwise possessed or used by the Department of Defense. The term does

not include any operational range, operating storage or manufacturing facility, or facility that is used for or was permitted for the treatment or disposal of military munitions.

''Discarded military munitions'' includes military munitions that have been abandoned without proper disposal or removed from storage in a military magazine or other storage area for the purpose of disposal. The term does not include unexploded ordnance, military munitions that are being held for future use or planned disposal, or military munitions that have been properly disposed of, consistent with applicable environmental laws and regulations.

''Military munitions'' consists of all ammunition products and components produced for or used by the armed forces for national defense and security, including ammunition products or components under the control of Department of Defense, the Coast Guard, the Department of Energy, and the National Guard. The term includes confined gaseous, liquid, and solid propellants, explosives, pyrotechnics, chemical and riot control agents, smokes, and incendiaries, including bulk explosive and chemical warfare agents, chemical munitions, rockets, guided and ballistic missiles, bombs, warheads, mortar rounds, artillery ammunition, small arms ammunition, grenades, mines, torpedoes, depth charges, cluster munitions and dispensers, demolition charges, and devices and components thereof. The term does not include wholly inert items, improvised explosive devices, and nuclear weapons, nuclear devices, and nuclear components, except that the term does include nonnuclear components of nuclear devices that are managed under the nuclear weapons program of the Department of Energy after all required sanitization operations under the Atomic Energy Act of 1954 (42 U.S.C. 2011 et seq.) have been completed.

''Munitions constituents'' means any materials originating from unexploded ordnance, discarded military munitions, or other military munitions, including explosive and nonexplosive materials, and emission, degradation, or breakdown elements of such ordnance or munitions.

''Munitions response sites'' means defense sites that contain unexploded ordnance, discarded military munitions, and munitions constituents.

''Unexploded ordnance'' includes military munitions that—

- Have been primed, fused, armed, or otherwise prepared for action;
- Have been fired, dropped, launched, projected, or placed in such a manner as to constitute a hazard to operations, installations, personnel, or material; and
- Remain unexploded either by malfunction, design, or any other cause.

Dated: March 12, 2002.

Patricia L. Toppings,

Alternate OSD Federal Register Liaison Officer, Department of Defense.

[FR Doc. 02–6419 Filed 3–19–02; 8:45 am]

BILLING CODE 5001–08–M

DEPARTMENT OF TRANSPORTATION

Coast Guard

33 CFR Parts 110 and 165

[COTP Honolulu 02–001]

RIN 2115–AA97, 2115–AA98

Anchorages and Security Zones; Oahu, Maui, Hawaii, and Kauai, HI

AGENCY: Coast Guard, DOT.

ACTION: Notice of proposed rulemaking.

SUMMARY: The Coast Guard proposes to establish security zones in designated waters adjacent to the islands of Oahu, Maui, Hawaii, and Kauai, HI for a period of six months. These security zones and a related amendment to regulations for anchorage grounds in Mamala Bay are necessary to protect personnel, vessels, and facilities from acts of sabotage or other subversive acts, accidents, or other causes of a similar nature and will extend from the surface of the water to the ocean floor. This proposed rule is similar to a previous rule published January 31, 2002, creating security zones in these areas until April 19, 2002. Entry into the proposed zones would be prohibited unless authorized by the Coast Guard Captain of the Port Honolulu, HI.

DATES: Comments and related material must reach the Coast Guard on or before April 15, 2002.

ADDRESSES: You may mail comments and related material to Commanding Officer, U.S. Coast Guard Marine Safety Office Honolulu, 433 Ala Moana Blvd., Honolulu, Hawaii 96813. Marine Safety Office Honolulu maintains the public docket for this rulemaking. Comments and material received from the public, as well as documents indicated in this preamble as being available in the docket, will become part of this docket and will be available for inspection or copying at Marine Safety Office Honolulu between 7 a.m. and 4:30 p.m., Monday through Friday, except Federal holidays.

FOR FURTHER INFORMATION CONTACT: LTJG E. G. Cantwell, U. S. Coast Guard Marine Safety Office Honolulu, Hawaii at (808) 522–8260.

SUPPLEMENTARY INFORMATION:

Request for Comments

We encourage you to participate in this rulemaking by submitting comments and related material. If you do so, please include your name and address, identify the docket number for this rulemaking (COTP Honolulu 02–001), indicate the specific section of this document to which each comment applies, and give the reason for each comment. Please submit all comments and related material in an unbound format, no larger than 8½ by 11 inches, suitable for copying. If you would like to know your submission reached us, please enclose a stamped, self-addressed postcard or envelope. We will consider all comments and material received during the comment period. We may change this proposed rule in view of them.

The deadline to submit comments is less than sixty days from the publication of the notice of proposed rules (NPRM) in the **Federal Register**. This short comment period will permit the Coast Guard to publish a temporary final rule before the expiration of the existing temporary security zone, and thus help ensure public safety and security. To provide additional notice, we will place a notice of our proposed rule in the local notice to mariners. You may request a copy of this notice via facsimile by calling (808) 522–8260.

In our final rule, we will include a concise general statement of comments received and identify any changes from the proposed rule based on the comments. If, as we expect, we will make the final rule effective in less than 30 days after publication in the **Federal Register**, we will explain our good cause for doing so as required by 5 U.S.C. 553(d)(3).

Public Meeting

We do not now plan to hold a public meeting. But you may submit a request for a meeting by writing to Marine Safety Office Honolulu at the address under **ADDRESSES** explaining why one would be beneficial. If we determine that one would aid this rulemaking, we will hold one at a time and place announced by a separate notice in the **Federal Register**.

Background and Purpose

Recent terrorist incidents in New York and Washington, D.C. have called for the implementation of additional measures to protect national security.

National security and intelligence officials warn that future terrorist attacks against civilian targets may be anticipated. This proposed rule is similar to a rule published January 31, 2002 (67 FR 4656), creating security zones in these areas until April 19, 2002.

Discussion of Proposed Rule

The Coast Guard proposes designated security zones in the waters adjacent to the islands of Oahu, Maui, Hawaii, and Kauai, HI for a period of six-months. These security zones are necessary to protect personnel, vessels, and facilities from acts of sabotage or other subversive acts, accidents, or other causes of a similar nature. In addition to creating security zones, this proposed rule would also amend an anchorage grounds regulation by adding the requirement that permission of the Captain of the Port be obtained before entering anchorage grounds in Mamala Bay.

These proposed security zones extend from the surface of the water to the ocean floor.

Entry into these zones is prohibited unless authorized by the Coast Guard Captain of the Port Honolulu, HI. Representatives of the Captain of the Port Honolulu will enforce these security zones. The Captain of the Port may be assisted by other federal or state agencies. Periodically, by Broadcast Notice to Mariners, the Coast Guard will announce the existence or status of the temporary security zones in this proposed rule.

These temporary proposed security zones are intended to provide for the safety and security of the public, maritime commerce, and transportation, by creating security zones in designated harbors, anchorages, facilities, and adjacent navigable waters of the United States.

Regulatory Evaluation

This proposed rule is not a ''significant regulatory action'' under section 3(f) of Executive Order 12866, Regulatory Planning and Review, and does not require an assessment of potential costs and benefits under section 6(a)(3) of that Order. The Office of Management and Budget has not reviewed it under that Order. It is not ''significant'' under the regulatory policies and procedures of the Department of Transportation (DOT)(44 FR 11040, February 26, 1979).

The Coast Guard expects the economic impact of this proposed rule to be so minimal that a full Regulatory Evaluation under paragraph 10e of the regulatory policies and procedures of DOT is unnecessary. This expectation is based on the short duration of the zone and the limited geographic zone affected by it.

Small Entities

Under the Regulatory Flexibility Act (5 U.S.C. 601–612), we have considered whether this proposed rule would have a significant economic impact on a substantial number of small entities. The term ''small entities'' comprises small businesses, not-for-profit organizations that are independently owned and operated and are not dominant in their fields, and governmental jurisdictions with populations of less than 50,000.

The Coast Guard certifies under 5 U.S.C. 605(b) that this proposed rule would not have a significant economic impact on a substantial number of small entities. No small business impacts are anticipated due to the small size of the zones and the short duration of the security zones in any one area.

If you think that your business, organization, or governmental jurisdiction qualifies as a small entity and that this rule would have a significant economic impact on it, please submit a comment (see **ADDRESSES**) explaining why you think it qualifies and how and to what degree this rule would economically affect it.

Assistance for Small Entities

Because we did not anticipate any small business impacts, we did not offer assistance to small entities in understanding the rule.

Collection of Information

This proposed rule would call for no new collection of information under the Paperwork Reduction Act of 1995 (44 U.S.C. 3501–3520).

Federalism

A rule has implications for federalism under Executive Order 13132, Federalism, if it has a substantial direct effect on State or local governments and would either preempt State law or impose a substantial direct cost of compliance on them. We have analyzed this proposed rule under that Order and have determined that it does not have implications for federalism.

Unfunded Mandates Reform Act

The Unfunded Mandates Reform Act of 1995 (2 U.S.C. 1531–1538) requires Federal agencies to assess the effects of their discretionary regulatory actions. In particular, the Act addresses actions that may result in the expenditure by a State, local, or tribal government, in the aggregate, or by the private sector of $100,000,000 or more in any one year. Though this proposed rule would not result in such an expenditure, we do discuss the effects of this rule elsewhere in this preamble.

Taking of Private Property

This proposed rule would not affect a taking of private property or otherwise have taking implications under Executive Order 12630, Governmental Actions and Interference with Constitutionally Protected Property Rights.

Civil Justice Reform

This proposed rule meets applicable standards in sections 3(a) and 3(b)(2) of Executive Order 12988, Civil Justice Reform, to minimize litigation, eliminate ambiguity, and reduce burden.

Protection of Children

We have analyzed this proposed rule under Executive Order 13045, Protection of Children from Environmental Health Risks and Safety Risks. This rule is not an economically significant rule and would not create an environmental risk to health or risk to safety that might disproportionately affect children.

Indian Tribal Governments

This proposed rule does not have tribal implications under Executive Order 13175, Consultation and Coordination with Indian Tribal Governments, because it would not have a substantial direct effect on one or more Indian tribes, on the relationship between the Federal Government and Indian tribes, or on the distribution of power and responsibilities between the Federal Government and Indian tribes. We invite your comments on how this proposed rule might impact tribal governments, even if that impact may not constitute a ''tribal implication'' under the Order.

Energy Effects

We have analyzed this proposed rule under Executive Order 13211, Actions Concerning Regulations That Significantly Affect Energy Supply, Distribution, or Use. We have determined that it is not a ''significant energy action'' under that order because it is not a ''significant regulatory action'' under Executive Order 12866 and is not likely to have a significant adverse effect on the supply, distribution, or use of energy. It has not been designated by the Administrator of the Office of Information and Regulatory Affairs as a significant energy action. Therefore, it

does not require a Statement of Energy Effects under Executive Order 13211.

Environment

We have considered the environmental impact of this proposed rule and concluded that, under figure 2–1, paragraph (34)(g), of Commandant Instruction M16475.lD, this rule is categorically excluded from further environmental documentation. A ''Categorical Exclusion Determination'' is available in the docket where indicated under **ADDRESSES.**

List of Subjects

33 CFR Part 110

Anchorage grounds.

33 CFR Part 165

Harbors, Marine safety, Navigation (water), Reports and recordkeeping requirements, Security measures, Waterways.

For the reasons set out in the preamble, the Coast Guard amends 33 CFR parts 110 and 165 as follows:

PART 110—ANCHORAGE REGULATIONS

1. The authority citation for part 110 continues to read as follows:

Authority: 33 U.S.C. 471, 1221 through 1236, 2030, 2035, 2071; 49 CFR 1.46 and 33 CFR 1.05–1(g).

2. From 6 a.m. April 19, 2002, until 4 p.m. October 19, 2002, in § 110.235 add a new paragraph (c) to read as follows:

§ 110.235 Pacific Ocean (Mamala Bay), Honolulu Harbor, Hawaii (Datum: NAD 83).

* * * * *

(c) Before entering in the anchorage grounds in this section you must first obtain permission from the Captain of the Port Honolulu.

PART 165—REGULATED NAVIGATION AREAS AND LIMITED ACCESS AREAS

3. The authority citation for part 165 continues to read as follows:

Authority: 33 U.S.C. 1231; 50 U.S.C. 191, 33 CFR 1.05–1(g), 6.04–1, 6.04–6, 160.5; 49 CFR 1.46.

4. A new § 165.T14–069 is temporarily added to read as follows:

§ 165.T14–069 Security Zones; Oahu, Maui, Hawaii, and Kauai, HI.

(a) *Location.* The following areas are security zones:

(1) All waters of Honolulu Harbor and entrance channel, Keehi Lagoon, and General Anchorages A, B, C, and D as defined in 33 CFR 110.235 that are shoreward of the following coordinates: The shoreline at 21°17.68′ N, 157°52.0′ W; thence due south to 21°16.0′ N, 157°52.0′ W, thence due west to 21°16.0′ N, 157°55.58′ W, thence due north to Honolulu International Airport Reef Runway at 21°18.25′ N, 157°55.58′ W.

(2) The waters around the Tesoro Single Point Mooring extending 1,000 yards in all directions from position 21°16.2′ N, 158°05.3′ W.

(3) The waters extending 1,000 yards in all directions around vessels moored at the Chevron Conventional Buoy Mooring at approximate position 21°16.7′ N, 158°04.2′ W.

(4) The Kahului Harbor and Entrance Channel, Maui, HI consisting of all waters shoreward of the COLREGS DEMARCATION line. (See 33 CFR 80.1460).

(5) All waters within the Nawiliwili Harbor, Kauai, HI shoreward of the COLREGS DEMARCATION line (See 33 CFR 80.1450).

(6) All waters of Port Allen Harbor, Kauai, HI shoreward of the COLREGS DEMARCATION line (See 33 CFR 80.1440).

(7) Hilo Harbor and Entrance Channel, Hawaii, HI consisting of all waters shoreward of the COLREGS DEMARCATION line (See 33 CFR 80.1480).

(8) The waters extending out 500 yards in all directions from cruise ship vessels anchored within 3 miles of:

(i) Lahaina Small Boat Harbor, Maui, between Makila Point and Puunoa Point.

(ii) Kailua-Kona Small Boat Harbor, Hawaii, between Keahulolu Point and Puapuaa Point.

(9) All waters contained within the Barbers Point Harbor, Oahu, enclosed by a line drawn between Harbor Entrance Channel Light 6 and the jetty point day beacon at 21°19.5 N, 158°07.3 W.

(b) *Designated representative.* A designated representative of the Captain of the Port is any Coast Guard commissioned officer, warrant or petty officer that has been authorized by the Captain of the Port Honolulu to act on his behalf. The following officers have or will be designated by the Captain of the Port Honolulu: The senior Coast Guard boarding officer on each vessel enforcing the security zone.

(c) *Regulations.* (1) In accordance with § 165.33, entry into these zones is prohibited unless authorized by the Coast Guard Captain of the Port, Honolulu or his designated representatives. Section 165.33 also contains other general requirements.

(2) The existence or status of the temporary security zones in this section will be announced periodically by Broadcast Notice to Mariners.

(3) Persons desiring to transit the areas of the security zones may contact the Captain of the Port at command center telephone number (808) 541–2477 or on VHF channel 16 (156.8 Mhz) to seek permission to transit the area. If permission is granted, all persons and vessels shall comply with the instructions of the Captain of the Port or his designated representatives.

(d) *Authority.* In addition to 33 U.S.C. 1231, the authority for this section is 33 U.S.C. 1226; 49 CFR 1.46.

(e) *Effective dates.* This section is effective from 6 a.m. HST April 19, 2002, until 4 p.m. HST October 19, 2002.

Dated: March 12, 2002.

T.L. Rice,

Captain, U.S. Coast Guard, Commander, Fourteenth Coast Guard District, Acting.

[FR Doc. 02–6733 Filed 3–15–02; 4:10 pm]

BILLING CODE 4910–15–U

DEPARTMENT OF TRANSPORTATION

Coast Guard

33 CFR Part 165

[PAC AREA–02–001]

RIN 2115–AG23

Protection of Naval Vessels

AGENCY: Coast Guard, DOT.

ACTION: Notice of proposed rulemaking.

SUMMARY: The Coast Guard proposes regulations for the safety and security of U.S. naval vessels in the navigable waters of the United States. Naval Vessel Protection Zones will provide for the regulation of vessel traffic in the vicinity of many U.S. naval vessels in the navigable waters of the United States.

DATES: Comments and related material must reach the Coast Guard on or before May 6, 2002.

ADDRESSES: You may mail comments and related material to Commander (Pmt), Coast Guard Pacific Area, Coast Guard Island, Bldg. 50–6, Alameda, CA 94501–5100. Commander (Pmt) maintains the public docket for this rulemaking. Comments and material received from the public, as well as documents indicated in this preamble as being available in the docket, are part of docket [PAC AREA 02–001] and are available for inspection or copying at Commander (Pmt), at the address listed above between 9 a.m. and 3 p.m., Monday through Friday, except Federal holidays.

FOR FURTHER INFORMATION CONTACT: Commander Steve Danscuk,

Commander (Pmt), Coast Guard Island, Bldg. 50–6, Alameda, CA 94501–5100; telephone number (510) 437–2943.

SUPPLEMENTARY INFORMATION:

Request for Comments

We encourage you to participate in this rulemaking by submitting comments and related material. If you do so, please include your name and address, identify the docket number for this rulemaking [PAC AREA 02–001], indicate the specific section of this document to which each comment applies, and give the reason for each comment. Please submit all comments and related material in an unbound format, no larger than 8½ by 11 inches, suitable for copying. If you would like to know they reached us, please enclose a stamped, self-addressed postcard or envelope. We will consider all comments and material received during the comment period. We may change this proposed rule in view of them.

Public Meeting

We do not now plan to hold a public meeting. But you may submit a request for a meeting by writing to Commander (Pmt), Coast Guard Pacific Area, at the address under **ADDRESSES** explaining why one would be beneficial. If we determine that one would aid this rulemaking, we will hold one at a time and place announced by a later notice in the **Federal Register**.

Background and Purpose

These zones are necessary to provide for the safety and security of United States naval vessels in the navigable waters of the United States. The regulations are issued under the authority contained in 14 U.S.C. 91. On September 21, 2001, the Coast Guard published temporary final rules entitled ''Protection of Naval Vessels'' in the **Federal Register** (66 FR 48779). Prior to issuing this temporary final rule, no regulation existed implementing 14 U.S.C. 91. The temporary final rule is in effect until June 15, 2002. No public hearing has been requested, and none has been held.

On February 21, 2002, Commander (Amr), Coast Guard Atlantic Area published a Notice of Proposed Rulemaking in the **Federal Register** (67 FR 7992) proposing to establish a permanent Subpart G to 33 CFR part 165 and setting out general provisions pertaining to that subpart. The general provisions of proposed Subpart G are discussed in the preamble to the Atlantic Area proposed rule and would apply to Pacific Area NVPZs. Our proposed rule would only add a new § 165.2030 to parallel Atlantic Area's proposed § 165.2025.

We have determined that a continuing need exists for the protection of naval vessels. Therefore, we are proposing a permanent rule that will replace the temporary rule by June 15, 2002. Based on our experience with the temporary final rule, we have made some changes that are detailed at length in the ''Discussion'' section of this preamble.

Discussion of Proposed Rule

This proposed rule, for safety and security concerns, controls vessel movement in a regulated area surrounding many U.S. naval vessels. All vessels within 500 yards of such a U.S. naval vessel shall operate at the minimum speed necessary to maintain a safe course, unless required by the Navigation Rules to maintain speed, and shall always proceed as directed by the Coast Guard, the senior naval officer present in command, or the official patrol. No vessel or person is allowed within 100 yards of a U.S. naval vessel greater than 100 feet in length unless authorized by the Coast Guard, the senior naval officer present in command, or the official patrol.

Only larger U.S. naval vessels are surrounded by a naval vessel protection zone to minimize this rule's effect on the public. Only U.S. naval vessels over 100 feet in length overall would be ''large U.S. naval vessels.''

The proposed rule contains several additional provisions to limit public impact. Vessels that need to pass within 100 yards of a large U.S. naval vessel may contact the Coast Guard, the senior naval officer present in command, or the official patrol on VHF–FM channel 16 to obtain the necessary permission.

Additionally, the Coast Guard, senior naval officer present in command, or the official patrol should permit vessels constrained by their navigational draft or restricted in their ability to maneuver to pass within 100 yards of a large U.S. naval vessel in order to ensure a safe passage in accordance with the Navigation Rules.

Similarly, commercial vessels anchored in a designated anchorage area should be permitted to remain at anchor within 100 yards of a passing large U.S. naval vessel when consistent with security requirements. As illustrated by the attack on the U.S.S. Cole, all vessels are potentially a security threat; therefore, vessels may, at times, be required to move. From a pure security perspective, all anchored vessels should be required to move. We believe, however, that security must be balanced with the burden on mariners and encourage enforcement officials to limit the impact on larger vessels, which are the most expensive and difficult to move.

In the proposed rule, we added language to address the situation where a naval vessel protection zone around a moored or anchored U.S. naval vessel effectively shuts down a narrow waterway. This situation could arise when a U.S. naval vessel makes a temporary port visit away from its normal homeport. In this situation, the Coast Guard, senior naval officer present in command, or the official patrol should permit transiting vessels to pass within 100 yards of the moored U.S. naval vessel with the minimal delay consistent with security requirements. This proposed rule does not intend to block narrow waterways from public use for extended periods of time. Mariners should anticipate some delay due to security needs. However, by including this new language in the regulation text, we want to make it clear that the Coast Guard, senior naval officer present in command, or the official patrol should, when appropriate, allow transiting vessels within the 100-yard exclusionary zone as needed to safely pass through a navigable channel or waterway. While maintaining security is paramount, avoiding extended delays in normal traffic is also very important.

We also added language that the Coast Guard, senior naval officer present in command, or the official patrol should give advance notice on VHF–FM channel 16 of all movements by large U.S. naval vessels once security concerns permit publicizing the movement. The goal is to give as much advance notice as possible. In most cases, however, this notice will probably be no more than an hour or two. These notifications should, to some extent, help mariners adjust their navigation plans accordingly or obtain early permission to enter into a naval vessel protection zone.

Violations of these regulations are punishable as a class D felony (imprisonment for not more than 6 years and a fine of not more than $250,000), a civil penalty, and may result in rem liability against the vessel.

Regulatory Evaluation

This proposed rule is not a ''significant regulatory action'' under section 3(f) of Executive Order 12866, Regulatory Planning and Review, and does not require an assessment of potential costs and benefits under section 6(a)(3) of that Order. The Office of Management and Budget has not reviewed it under that Order. It is not ''significant'' under the regulatory

policies and procedures of the Department of Transportation (DOT) (44 FR 11040, February 26, 1979).

We expect the economic impact of this proposed rule to be so minimal that a full Regulatory Evaluation under paragraph 10e of the regulatory policies and procedures of DOT is unnecessary.

Although this proposed regulation restricts access to the regulated area, the effect of this proposed regulation will not be significant because: (i) Individual naval vessel protection zones are limited in size; (ii) the Coast Guard, senior naval officer present in command, or official patrol may authorize access to the naval vessel protection zone; (iii) the naval vessel protection zone for any given transiting naval vessel will only effect a given geographical location for a limited time; and (iv) when conditions permit, the Coast Guard, senior naval officer present in command, or the official patrol should give advance notice of all naval vessel movements on VHF–FM channel 16 so mariners can adjust their plans accordingly. Further, the Coast Guard received no comments related to economic impact following implementation of the temporary final rule.

Small Entities

Under the Regulatory Flexibility Act (5 U.S.C. 601–612), we have considered whether this proposed rule would have a significant economic impact on a substantial number of small entities. The term ''small entities'' comprises small businesses, not-for-profit organizations that are independently owned and operated and are not dominant in their fields, and governmental jurisdictions with populations of less than 50,000.

The Coast Guard certifies under 5 U.S.C. 605(b) that this proposed rule will not have a significant economic impact on a substantial number of small entities.

This proposed rule will affect the following entities, some of which may be small entities: The owners or operators of vessels intending to operate near or anchor in the vicinity of U.S. naval vessels in the navigable waters of the United States.

This proposed regulation will not have a significant economic impact on a substantial number of small entities for the following reasons: (i) Individual naval vessel protection zones are limited in size; (ii) the official patrol may authorize access to the naval vessel protection zone; (iii) the naval vessel protection zone for any given transiting naval vessel will only affect a given geographic location for a limited time; and (iv) when conditions permit, the Coast Guard, senior naval officer present in command, or the official patrol should give advance notice of all naval vessel movements on VHF–FM channel 16 so mariners can adjust their plans accordingly. Further, the Coast Guard received no comments related to small entity impact following implementation of the temporary final rule.

If you think that your business, organization, or governmental jurisdiction qualifies as a small entity and that this rule would have a significant economic impact on it, please submit a comment (*see* **ADDRESSES**) explaining why you think it qualifies and how and to what degree this rule would economically affect it.

Assistance for Small Entities

Under section 213(a) of the Small Business Regulatory Enforcement Fairness Act of 1996 (Pub. L. 104–121), we want to assist small entities in understanding this proposed rule so that they can better evaluate its effects on them and participate in the rulemaking. If the rule would affect your small business, organization, or governmental jurisdiction and you have questions concerning its provisions or options for compliance, please contact the address listed under **ADDRESSES**.

Collection of Information

This proposed rule calls for no new collection of information under the Paperwork Reduction Act of 1995 (44 U.S.C. 3501–3520).

Unfunded Mandates Reform Act

The Unfunded Mandates Reform Act of 1995 (2 U.S.C. 1531–1538) requires Federal agencies to assess the effects of their discretionary regulatory actions. In particular, the Act addresses actions that may result in the expenditure by a State, local, or tribal government, in the aggregate, or by the private sector of $100,000,000 or more in any one year. Though this proposed rule will not result in such an expenditure, we do discuss the effects of this rule elsewhere in this preamble.

Taking of Private Property

This proposed rule will not effect a taking of private property or otherwise have taking implications under Executive Order 12630, Governmental Actions and Interference with Constitutionally Protected Property Rights.

Civil Justice Reform

This proposed rule meets applicable standards in sections 3(a) and 3(b)(2) of Executive Order 12988, Civil Justice Reform, to minimize litigation, eliminate ambiguity, and reduce burden.

Protection of Children

We have analyzed this proposed rule under Executive Order 13045, Protection of Children from Environmental Health Risks and Safety Risks. This rule is not an economically significant rule and does not create an environmental risk to health or risk to safety that may disproportionately affect children.

Indian Tribal Governments

This proposed rule does not have tribal implications under Executive Order 13175, Consultation and Coordination with Indian Tribal Governments, because it would not have a substantial direct effect on one or more Indian tribes, on the relationship between the Federal Government and Indian tribes, or on the distribution of power and responsibilities between the Federal Government and Indian tribes.

To help the Coast Guard establish regular and meaningful consultation and collaboration with Indian and Alaskan Native tribes, we published a notice in the **Federal Register** (66 FR 36361, July 11, 2001) requesting comments on how to best carry out the Order. We invite your comments on how this proposed rule might impact tribal governments, even if that impact may not constitute a ''tribal implication'' under the Order.

Energy Effects

We have analyzed this proposed rule under Executive Order 13211, Actions Concerning Regulations That Significantly Affect Energy Supply, Distribution, or Use. We have determined that it is not a ''significant energy action'' under that order because it is not a ''significant regulatory action'' under Executive Order 12866 and is not likely to have a significant adverse effect on the supply, distribution, or use of energy. It has not been designated by the Administrator of the Office of Information and Regulatory Affairs as a significant energy action. Therefore, it does not require a Statement of Energy Effects under Executive Order 13211.

Environment

We have considered the environmental impact of this proposed rule and concluded that, under figure 2–1, paragraph (34)(g), of Commandant Instruction M16475.lD, this rule is categorically excluded from further environmental documentation. A ''Categorical Exclusion Determination'' is available in the docket where

indicated under **ADDRESSES.** Further, the Coast Guard received no comments related to environmental impact following implementation of the temporary final rule.

List of Subjects in 33 CFR part 165

Harbors, Marine safety, Navigation (water), Protection of naval vessels, Reporting and recordkeeping requirements, Security measures, Waterways.

For the reasons discussed in the preamble, the Coast Guard proposes to amend 33 CFR part 165 as follows:

PART 165—REGULATED NAVIGATION AREAS AND LIMITED ACCESS AREAS

SUBPART G—PROTECTION OF NAVAL VESSELS

1. The authority citation for part 165 subpart G continues to read as follows:

Authority: 14 U.S.C 91 and 633; 49 CFR 1.45.

2. Add § 165.2030 to read as follows:

§ 165.2030 Pacific Area.

(a) This section applies to any vessel or person in the navigable waters of the United States within the boundaries of the U.S. Coast Guard Pacific Area, which includes the Eleventh, Thirteenth, Fourteenth, and Seventeenth U.S. Coast Guard Districts.

Note to paragraph (a): The boundaries of the U.S. Coast Guard Pacific Area and the Eleventh, Thirteenth, Fourteenth, and Seventeenth U.S. Coast Guard Districts are set out in 33 CFR part 3.

(b) A naval vessel protection zone exists around U.S. naval vessels greater than 100 feet in length overall at all times in the navigable waters of the United States, whether the large U.S. naval vessel is underway, anchored, moored, or within a floating drydock, except when the large naval vessel is moored or anchored within a restricted area or within a naval defensive sea area.

(c) The Navigation Rules shall apply at all times within a naval vessel protection zone.

(d) When within a naval vessel protection zone, all vessels shall operate at the minimum speed necessary to maintain a safe course, unless required to maintain speed by the Navigation Rules, and shall proceed as directed by the Coast Guard, the senior naval officer present in command, or the official patrol. When within a naval vessel protection zone, no vessel or person is allowed within 100 yards of a large U.S. naval vessel unless authorized by the Coast Guard, the senior naval officer present in command, or official patrol.

(e) To request authorization to operate within 100 yards of a large U.S. naval vessel, contact the Coast Guard, the senior naval officer present in command, or the official patrol on VHF–FM channel 16.

(f) When conditions permit, the Coast Guard, senior naval officer present in command, or the official patrol should:

(1) give advance notice on VHF–FM channel 16 of all large U.S. naval vessel movements; and

(2) permit vessels constrained by their navigational draft or restricted in their ability to maneuver to pass within 100 yards of a large U.S. naval vessel in order to ensure a safe passage in accordance with the Navigation Rules; and

(3) permit commercial vessels anchored in a designated anchorage area to remain at anchor when within 100 yards of passing large U.S. naval vessels; and

(4) permit vessels that must transit via a navigable channel or waterway to pass within 100 yards of a moored or anchored large U.S. naval vessel with minimal delay consistent with security.

Note to paragraph (f): The listed actions are discretionary and do not create any additional right to appeal or otherwise dispute a decision of the Coast Guard, the senior naval officer present in command, or the official patrol.

Dated: March 12, 2002.

E.R. Riutta,

Vice Admiral, U.S. Coast Guard, Commander, Eleventh Coast Guard District.

[FR Doc. 02–6766 Filed 3–19–02; 8:45 am]

BILLING CODE 4910–15–P

DEPARTMENT OF TRANSPORTATION

Coast Guard

33 CFR Part 165

[CGD01–02–006]

RIN 2115–AA97

Safety Zone; Mystic Places Offshore Grand Prix, New London, CT

AGENCY: Coast Guard, DOT.

ACTION: Notice of proposed rulemaking.

SUMMARY: The Coast Guard proposes to establish a temporary safety zone for the Mystic Places Offshore Grand Prix, off Ocean Beach, New London, CT. This action is necessary to provide for the safety of life on navigable waters during this May 3-to-5, 2002 event. This action is intended to restrict vessel traffic in a portion of Long Island Sound in the vicinity of Ocean Beach, New London, CT.

DATES: Comments and related material must reach the Coast Guard on or before April 19, 2002.

ADDRESSES: You may mail comments and related material to Marine Events, Coast Guard Group/Marine Safety Office Long Island Sound, Command Center, 120 Woodward Ave., New Haven, CT 06512. Coast Guard Group/Marine Safety Office Long Island Sound maintains the public docket for this rulemaking. Comments and material received from the public, as well as documents indicated in this preamble as being available in the docket, will become part of this docket and will be available for inspection or copying at Group/MSO Long Island Sound, New Haven, CT, between 7:30 a.m. and 4:00 p.m., Monday through Friday, except Federal holidays.

FOR FURTHER INFORMATION CONTACT: Boatswain's Mate Second Class (BM2) Ryan Peebles, Group Operations Petty Officer, Coast Guard Group/MSO Long Island Sound (203) 468–4408.

SUPPLEMENTARY INFORMATION:

Request for Comments

We encourage you to participate in this rulemaking by submitting comments and related material. If you do so, please include your name and address, identify the docket number for this rulemaking (CGD01–02–006), indicate the specific section of this document to which each comment applies, and give the reason for each comment. Please submit all comments and related material in an unbound format, no larger than 8½ by 11 inches, suitable for copying. If you would like to know they reached us, please enclose a stamped, self-addressed postcard or envelope. We will consider all comments and material received during the comment period. We may change this proposed rule in view of them.

Public Meeting

We do not now plan to hold a public meeting, but you may submit a request for a meeting by writing to Coast Guard Group/MSO Long Island Sound at the address under **ADDRESSES** explaining why one would be beneficial. If we determine that one would aid this rulemaking, we will hold one at a time and place announced by a later notice in the **Federal Register**.

Background and Purpose

The Coast Guard proposes to establish a temporary safety zone for the Mystic Places Offshore Grand Prix off Ocean Beach in Long Island Sound. The proposed safety zone prevents vessels from transiting a portion of Long Island

Sound. It is needed to protect boaters from the hazards associated with power boat races being conducted within the boundaries of the safety zone.

The comment period was abbreviated in order to allow for the promulgation of a temporary rule in advance of the scheduled power boat races. The proposed rule is unlikely to engender public controversy. The safety zone encompasses a modest area and is of limited duration. Our previous rulemaking experience in cases of a similar nature suggests that we are unlikely to receive any adverse comments.

Discussion of Proposed Rule

The proposed safety zone encompasses all waters of Long Island Sound within the boundaries of a line beginning at 41°18′00″ N, 072°05′58″ W; then to 41°18′20″ N, 072°05′40″ W; then to 41°18′20″ N, 072°04′58″ W; then to 41°18′00″ N, 072°04′58″ W (NAD 1983); and then returning to the point of origin. The proposed safety zone will be enforced from 1 p.m. until 3 p.m. each day from May 3, 2002 through May 5, 2002. Only race officials and participants will be allowed inside the boundaries of the proposed zone during these periods. All other marine traffic will be allowed to transit around the safety zone at all times. Vessels will not be precluded from mooring at or getting underway from recreational or commercial piers in the vicinity of the zone. No vessel may enter the safety zone without permission from the Captain of the Port, Long Island Sound.

Regulatory Evaluation

This proposed rule is not a ''significant regulatory action'' under section 3(f) of Executive Order 12866, Regulatory planning and review, and does not require an assessment of potential costs and benefits under section 6(a)(3) of that Order. The Office of Management and Budget has not reviewed it under that Order. It is not ''significant'' under the regulatory policies and procedures of the Department of Transportation (DOT) (44 FR 11040, February 26, 1979).

We expect the economic impact of this proposed rule to be so minimal that a full Regulatory Evaluation under paragraph 10e of the regulatory policies and procedures of DOT is unnecessary. This proposed safety zone would temporarily close a portion of Long Island Sound to vessel traffic. However, the impact of this regulation is expected to be minimal for the following reasons: the event is of limited duration; vessels are not precluded from getting underway, or mooring at, public or private facilities in the vicinity of the event; advance advisories will be made to the maritime community; and marine traffic may still transit around the zone during the event.

Small Entities

Under the Regulatory Flexibility Act (5 U.S.C. 601–612), we considered whether this proposed rule would have a significant economic impact on a substantial number of small entities. The term ''small entities'' comprises small businesses, not-for-profit organizations that are independently owned and operated and are not dominant in their fields, and governmental jurisdictions with populations of less than 50,000.

The Coast Guard certifies under 5 U.S.C. 605(b) that this proposed rule would not have a significant economic impact on a substantial number of small entities. This proposed rule would affect the following entities, some of which might be small entities: the owners or operators of vessels intending to transit or anchor in a portion of Long Island Sound during the time this zone is activated. This safety zone would not have a significant economic impact on a substantial number of small entities for the following reasons: the event is of limited duration; vessels are not precluded from getting underway, or mooring at, public or private facilities in the vicinity of the event; advance advisories will be made to the maritime community; and marine traffic may still transit around the zone during the event.

If you think that your business, organization, or governmental jurisdiction qualifies as a small entity and that this rule would have a significant economic impact on it, please submit a comment (*see* **ADDRESSES**) explaining why you think it qualifies and how and to what degree this rule would economically affect it.

Assistance for Small Entities

Under section 213(a) of the Small Business Regulatory Enforcement Fairness Act of 1996 (Public Law 104–121), we want to assist small entities in understanding this proposed rule so that they can better evaluate its effects on them and participate in the rulemaking. If the rule would affect your small business, organization, or governmental jurisdiction and you have questions concerning its provisions or options for compliance, please contact BM2 Ryan Peebles, Operations Petty Officer, Coast Guard Group/MSO Long Island Sound (203) 468–4408.

Collection of Information

This proposed rule would call for no new collection of information under the Paperwork Reduction Act of 1995 (44 U.S.C. 3501–3520).

Federalism

A rule has implications for federalism under Executive Order 13132, Federalism, if it has a substantial direct effect on State or local governments and would either preempt State law or impose a substantial direct cost of compliance on them. We have analyzed this proposed rule under that Order and have determined that it does not have implications for federalism.

Unfunded Mandates Reform Act

The Unfunded Mandates Reform Act of 1995 (2 U.S.C. 1531–1538) requires Federal agencies to assess the effects of their discretionary regulatory actions. In particular, the Act addresses actions that may result in the expenditure by a State, local, or tribal government, in the aggregate, or by the private sector of $100,000,000 or more in any one year. Though this proposed rule would not result in such an expenditure, we do discuss the effects of this rule elsewhere in this preamble.

Taking of Private Property

This proposed rule would not effect a taking of private property or otherwise have taking implications under Executive Order 12630, Governmental Actions and Interference with Constitutionally Protected Property Rights.

Civil Justice Reform

This proposed rule meets applicable standards in sections 3(a) and 3(b)(2) of Executive Order 12988, Civil Justice Reform, to minimize litigation, eliminate ambiguity, and reduce burden.

Protection of Children

We have analyzed this proposed rule under Executive Order 13045, Protection of Children from Environmental Health Risks and Safety Risks. This rule is not an economically significant rule and would not concern an environmental risk to health or risk to safety that may disproportionately affect children.

Indian Tribal Governments

This proposed rule does not have tribal implications under Executive Order 13175, Consultation and Coordination with Indian Tribal Governments, because it would not have a substantial direct effect on one or more Indian tribes, on the relationship

between the Federal Government and Indian tribes, or on the distribution of power and responsibilities between the Federal Government and Indian tribes.

To help the Coast Guard establish regular and meaningful consultation and collaboration with Indian and Alaskan Native tribes, we published a notice in the **Federal Register** (66 FR 36361, July 11, 2001) requesting comments on how to best carry out the Order. We invite your comments on how this proposed rule might impact tribal governments, even if that impact may not constitute a ''tribal implication'' under the Order.

Energy Effects

We have analyzed this proposed rule under Executive Order 13211, Actions Concerning Regulations That Significantly Affect Energy Supply, Distribution, or Use. We have determined that it is not a ''significant energy action'' under that order because it is not a ''significant regulatory action'' under Executive Order 12866 and is not likely to have a significant adverse effect on the supply, distribution, or use of energy. It has not been designated by the Administrator of the Office of Information and Regulatory Affairs as a significant energy action. Therefore, it does not require a Statement of Energy Effects under Executive Order 13211.

Environment

We considered the environmental impact of this proposed rule and concluded that, under figure 2–1, paragraph 34(g), of Commandant Instruction M16475.1C, this proposed rule is categorically excluded from further environmental documentation. This proposed rule fits paragraph 34(g) as it establishes a safety zone. A ''Categorical Exclusion Determination'' is available in the docket where indicated under **ADDRESSES.**

List of Subjects in 33 CFR Part 165

Harbors, Marine Safety, Navigation (water), Reporting and recordkeeping requirements, Security measures, Waterways.

For the reasons discussed in the preamble, the Coast Guard proposes to amend 33 CFR part 165 as follows:

PART 165—REGULATED NAVIGATION AREAS AND LIMITED ACCESS AREAS

1. The authority citation for part 165 continues to read as follows:

Authority: 33 U.S.C. 1231; 50 U.S.C. 191, 33 CFR 1.05–1(g), 6.04–1, 6.04–6, 160.5; 49 CFR 1.46.

2. From 1 p.m. on May 3, 2002 through 3 p.m. on May 5, 2002, add temporary § 165.T01–006 to read as follows:

§ 165.T01–006 Safety Zone: Mystic Places Offshore Grand Prix, New London, CT.

(a) Location. The following area is a safety zone: All waters off Ocean Beach in Long Island Sound, within the boundaries of a line beginning at 41°18′00″N, 072°05′58″W; then to 41°18′20″N, 072°05′40″W; then to 41°18′20″N, 072°04′58″W; then to 41°18′00″N, 072°04′58″W (NAD 1983); and then returning to the point of origin.

(b) Enforcement period. This section will be enforced from 1 p.m. until 3 p.m. each day from May 3, 2002 through May 5, 2002.

(c) Regulations. (1) Vessels not participating in the event, swimmers and personal watercraft of any nature are prohibited from entering or moving within the safety zone unless authorized by the Captain of the Port. (2) All persons and vessels shall comply with the instructions of the Coast Guard Captain of the Port or the designated on-scene patrol personnel. These personnel comprise commissioned, warrant, and petty officers of the Coast Guard. Upon being hailed by a U. S. Coast Guard vessel by siren, radio, flashing light, or other means, the operator of a vessel shall proceed as directed.

Dated: February 27, 2002.

J.J. Coccia,

Captain, U.S. Coast Guard, Captain of the Port, Long Island Sound.

[FR Doc. 02–6765 Filed 3–19–02; 8:45 am]

BILLING CODE 4910–15–P

DEPARTMENT OF TRANSPORTATION

Coast Guard

33 CFR Part 165

[CGD01–02–026]

RIN 2115–AA97

Safety Zone; Lynn Fourth of July Celebration, Nahant Bay, Lynn, MA

AGENCY: Coast Guard, DOT.

ACTION: Notice of proposed rulemaking.

SUMMARY: The Coast Guard proposes to establish a temporary safety zone for the Lynn Fourth of July Celebration on July 3, 2002, in Lynn, MA. The safety zone would temporarily close all waters of Nahant Bay within a 500-yard radius of the launch platform located in approximate position 42°27′48″ N, 70°55′38″ W. The safety zone would prohibit entry into or movement within this portion Nahant Bay during the fireworks display.

DATES: Comments and related material must reach the Coast Guard on or before May 1, 2002.

ADDRESSES: You may mail comments and related material to Marine Safety Office Boston, 455 Commercial Street, Boston, MA. Marine Safety Office Boston maintains the public docket for this rulemaking. Comments and material received from the public, as well as documents indicated in this preamble as being available in the docket, will become part of the docket and will be available for inspection or copying at Marine Safety Office Boston between 8 A.M. and 3 P.M., Monday through Friday, except Federal holidays.

FOR FURTHER INFORMATION CONTACT: Chief Petty Officer Michael Popovich, Marine Safety Office Boston, Waterways Safety and Response Division, at (617) 223–3000.

SUPPLEMENTARY INFORMATION:

Request for Information

We encourage you to participate in this rulemaking by submitting comments and related material. If you do so, please include your name and address, identify the docket number for this rulemaking (CGD01–02–026), indicate the specific section of this document to which each comment applies, and give the reason for each comment. Please submit all comments and related material in an unbound format, no larger than 8½ by 11 inches, suitable for copying. If you would like to know your comments reached us, please enclose a stamped, self addressed postcard or envelope. We will consider all comments and material received during the comment period. We may change this proposed rule in view of them.

Public Meeting

We do not now plan to hold a public meeting. However, you may submit a request for a meeting by writing to Marine Safety Office Boston at the address under **ADDRESSES** explaining why one would be beneficial. If we determine that a public meeting would aid this rulemaking, we will hold one at a time and place announced by a separate notice in the **Federal Register**.

Background and Purpose

We propose to establish a safety zone within a 500-yard radius of the fireworks barge located at position 42°27′48″ N, 070°55′38″ W. The safety zone would be in effect from 5 p.m. until 10:30 p.m. on Monday, July 3, 2002.

The zone would restrict movement within this portion of Nahant Bay for

the fireworks display and is needed to protect the maritime public from the dangers posed by a fireworks display. Marine traffic may transit safely outside of the safety zone during the effective periods. The Captain of the Port does not anticipate any negative impact on vessel traffic due to this event. Public notifications will be made prior to the effective period via safety marine information broadcasts and local notice to mariners.

Regulatory Evaluation

This proposed rule is not a ''significant regulatory action'' under section 3(f) of Executive Order 12866 and does not require an assessment of potential costs and benefits under section 6(a)(3) of that Order. The Office of Management and Budget has not reviewed it under that Order. It is not significant under the regulatory policies and procedures of the Department of Transportation (DOT) (44 FR 11040, February 26, 1979).

The Coast Guard expects the economic impact of this proposed rule to be so minimal that a full Regulatory Evaluation under paragraph 10e of the regulatory policies and procedures of DOT is unnecessary.

Although this proposed regulation will prevent traffic from transiting a portion of Nahant Bay during the effective period, the effects of this regulation will not be significant for several reasons: the minimal time that vessels will be restricted from the area, vessels may safely transit outside of the safety zone, and advance notifications will be made to the local maritime community by safety marine information broadcasts and local notice to mariners.

Small Entities

Under the Regulatory Flexibility Act (5 U.S.C. 601–612), the Coast Guard considered whether this proposed rule would have a significant economic impact on a substantial number of small entities. The term ''small entities'' comprises small businesses, not-for-profit organizations that are independently owned and operated and are not dominant in their fields, and governmental jurisdictions with populations of less than 50,000.

The Coast Guard certifies under 5 U.S.C. 605(b) that this rule will not have a significant economic impact on a substantial number of small entities. This rule will affect the following entities, some of which may be small entities: the owners or operators of vessels intending to transit or anchor in a portion of Nahant Bay between 5 p.m. and 10:30 p.m. on July 3, 2002. This safety zone will not have a significant economic impact on a substantial number of small entities for the following reasons: vessel traffic can safely pass outside of the safety zone during the effective period, the safety zone is limited in duration, and advance notifications which will be made to the local maritime community by safety marine information broadcasts and local notice to mariners.

If you think that your business, organization, or governmental jurisdiction qualifies as a small entity and that this proposed rule would have a significant economic impact on it, please submit a comment (see **ADDRESSES**) explaining why you think it qualifies and how and to what degree this rule would economically affect it.

Assistance for Small Entities

Under section 213(a) of the Small Business Regulatory Enforcement Fairness Act of 1996 (Pubic Law 104–121), we want to assist small entities in understanding this proposed rule so that they can better evaluate its effects on them and participate in the rulemaking. If the rule would affect your small business, organization, or governmental jurisdiction and you have questions concerning its provisions or options for compliance, please contact Chief Petty Officer Michael Popovich at the address listed under **ADDRESSES.**

Collection of Information

This proposed rule would call for no new collection of information under the Paperwork Reduction Act of 1995 (44 U.S.C. 3501–3520).

Federalism

The Coast Guard analyzed this proposed rule under Executive Order 13132 and has determined that this rule does not have implications for federalism under that Order.

Unfunded Mandates Reform Act

The Unfunded Mandates Reform Act of 1995 (2 U.S.C. 1531–1538) governs the issuance of Federal regulations that require unfunded mandates. An unfunded mandate is a regulation that requires a State, local, or tribal government or the private sector to incur direct costs without the Federal Government's having first provided the funds to pay those costs. This proposed rule would not impose an unfunded mandate.

Taking of Private Property

This proposed rule would not effect a taking of private property or otherwise have taking implications under Executive Order 12630, Governmental Actions and Interference with Constitutionally Protected Property Rights.

Civil Justice Reform

This proposed rule meets applicable standards in sections 3(a) and 3(b)(2) of Executive Order 12988, Civil Justice Reform, to minimize litigation, eliminate ambiguity, and reduce burden.

Protection of Children

The Coast Guard analyzed this proposed rule under Executive Order 13045, Protection of Children from Environmental Health Risks and Safety Risks. This rule is not an economically significant rule and does not pose an environmental risk to health or risk to safety that may disproportionately affect children.

Environment

The Coast Guard considered the environmental impact of this proposed rule and concluded that, under figure 2–1, (34)(g), of Commandant Instruction M16475.lC, this proposed rule is categorically excluded from further environmental documentation. A ''Categorical Exclusion Determination'' is available in the docket where indicated under **ADDRESSES.**

List of Subjects in 33 CFR Part 165

Harbors, Marine safety, Navigation (water), Reporting and recordkeeping requirements, Security measures, Waterways.

For the reasons discussed in the preamble, the Coast Guard proposes to amend 33 CFR part 165 as follows:

PART 165—REGULATED NAVIGATION AREAS AND LIMITED ACCESS AREAS

1. The authority citation for part 165 continues to read as follows:

Authority: 33 U.S.C. 1231; 50 U.S.C. 191, 33 CFR 1.05–1(g), 6.04–1, 6.04–6, 160.5; 49 CFR 1.46.

2. Add temporary § 165.T01–026 to read as follows:

§ 165.T01–026 Safety Zone: Lynn Fourth of July Celebration, Lynn, Massachusetts.

(a) *Location.* The following area is a safety zone:

All waters of Nahant Bay within a 500-yard radius of the fireworks launch platform located in approximate position 42°27′48″ N, 070°55′38″ W.

(b) *Effective date.* This section will be effective from 5 p.m. until 10:30 p.m. on July 3, 2002.

(c) *Regulations.* (1) In accordance with the general regulations in § 165.23, entry into or movement within this zone will

be prohibited unless authorized by the Captain of the Port Boston.

(2) All vessel operators shall comply with the instructions of the COTP or the designated on-scene U.S. Coast Guard patrol personnel. On-scene Coast Guard patrol personnel include commissioned, warrant, and petty officers of the Coast Guard on board Coast Guard, Coast Guard Auxiliary, local, state, and federal law enforcement vessels.

Dated: March 1, 2002.

B.M. Salerno,

Captain, U.S. Coast Guard, Captain of the Port, Boston, Massachusetts.

[FR Doc. 02–6762 Filed 3–19–02; 8:45 am]

BILLING CODE 4910–15–U

DEPARTMENT OF TRANSPORTATION

Coast Guard

33 CFR Part 165

[COTP Baltimore 02–002]

RIN 2115–AA97

Security Zone; Potomac River, Washington Channel, Washington, DC

AGENCY: Coast Guard, DOT.

ACTION: Notice of proposed rulemaking.

SUMMARY: The Coast Guard proposes establishing a temporary security zone in the waters of Washington Channel on the Potomac River off Fort Lesley J. McNair, Washington, DC, during the May 30, 2002, U.S. Coast Guard Commandant's Change of Command ceremony. The security zone is necessary to provide for the security and safety of life and property of event participants, spectators and mariners on U.S. navigable waters during the event. Entry into this zone is prohibited unless authorized by the Captain of the Port, Baltimore, Maryland, or designated representative.

DATES: Comments and related material must reach the Coast Guard on or before April 19, 2002.

ADDRESSES: You may mail comments and related material to the Port Safety, Security and Waterways Management Branch, at Commander, U.S. Coast Guard Activities Baltimore, 2401 Hawkins Point Road, Baltimore, Maryland, 21226–1791. U.S. Coast Guard Activities Baltimore, Port Safety, Security and Waterways Management Branch maintains the public docket for this rulemaking. Comments and material received from the public, as well as documents indicated in this preamble as being available in the docket, will become part of this docket and will be available for inspection or copying at U.S. Coast Guard Activities Baltimore, Port Safety, Security and Waterways Management Branch between 8 a.m. and 4 p.m., Monday through Friday, except Federal holidays.

FOR FURTHER INFORMATION CONTACT: Ronald L. Houck, Port Safety, Security and Waterways Management Branch, at telephone number (410) 576–2674.

SUPPLEMENTARY INFORMATION:

Request for Comments

We encourage you to participate in this rulemaking by submitting comments and related material. If you do so, please include your name and address, identify the docket number for this rulemaking (COTP Baltimore–02–002), indicate the specific section of this document to which each comment applies, and give the reason for each comment. Please submit all comments and related material in an unbound format, no larger than 8½ by 11 inches, suitable for copying. If you would like to know your submission reached us, please enclose a stamped, self-addressed postcard or envelope. We will consider all comments and material received during the comment period. We may change this proposed rule in view of them.

Public Meeting

We do not now plan to hold a public meeting. But you may submit a request for a meeting by writing to Commander, U.S. Coast Guard Activities Baltimore at the address under **ADDRESSES** explaining why one would be beneficial. If we determine that one would aid this rulemaking, we will hold one at a time and place announced by a separate notice in the **Federal Register**.

Background and Purpose

The Coast Guard will conduct a Change of Command ceremony along the Potomac River at Washington, DC. A security zone is needed to protect dignitaries taking part in the high-level military ceremony from potential threats posed by waterborne acts of sabotage or other subversive acts. The purpose of the proposed regulation is to promote maritime safety and protect participants and spectators during the event. These regulations will impact the movement of all vessels operating in the specified area on the Washington Channel at Washington, DC.

Discussion of Proposed Rule

The U.S. Coast Guard Commandant's Change of Command ceremony will be held at Fort Lesley J. McNair, Washington, DC, on May 30, 2002. The event will consist of a background comprised of three U.S. Coast Guard vessels anchored adjacent to Fort McNair on the confined waters of the Washington Channel, on the Potomac River. A security zone is needed from 11 a.m. to 4 p.m. on May 30, 2002 to safeguard event participants and spectators. U.S. Coast Guard patrol vessels will be provided to prevent the movement of persons and vessels in an area approximately 200 yards wide and 450 yards long within Washington Channel. Entry into this zone is prohibited unless authorized by the Captain of the Port or his or her designated representative. The Captain of the Port will notify the public of changes in the status of the zone by a Marine Safety Radio Broadcast.

Regulatory Evaluation

This proposed rule is not a ''significant regulatory action'' under section 3(f) of Executive Order 12866, Regulatory Planning and Review, and does not require an assessment of potential costs and benefits under section 6(a)(3) of that Order. The Office of Management and Budget has not reviewed it under that Order. It is not ''significant'' under the regulatory policies and procedures of the Department of Transportation (DOT)(44 FR 11040, February 26, 1979).

We expect the economic impact of this proposed rule to be so minimal that a full Regulatory Evaluation under paragraph 10e of the regulatory policies and procedures of DOT is unnecessary. This temporary rule affects a limited area for approximately five hours, and will not completely close the navigable channel. Therefore, the Coast Guard expects the economic impact of this proposal to be so minimal that a full Regulatory Evaluation under paragraph 10(e) of the regulatory policies and procedures of DOT is unnecessary.

Small Entities

Under the Regulatory Flexibility Act (5 U.S.C. 601–612), we have considered whether this proposed rule would have a significant economic impact on a substantial number of small entities. The term ''small entities'' comprises small businesses, not-for-profit organizations that are independently owned and operated and are not dominant in their fields, and governmental jurisdictions with populations of less than 50,000.

The Coast Guard certifies under 5 U.S.C. 605(b) that this proposed rule would not have a significant economic impact on a substantial number of small entities. Because this proposal will only be in effect for a limited amount of time, and extensive advisories will be made to

the affected maritime community so that they may adjust their schedules accordingly, the Coast Guard expects the impact of this proposal to be minimal.

If you think that your business, organization, or governmental jurisdiction qualifies as a small entity and that this rule would have a significant economic impact on it, please submit a comment (see **ADDRESSES**) explaining why you think it qualifies and how and to what degree this rule would economically affect it.

Assistance for Small Entities

Under section 213(a) of the Small Business Regulatory Enforcement Fairness Act of 1996 (Public Law 104–121), we want to assist small entities in understanding this proposed rule so that they can better evaluate its effects on them and participate in the rulemaking. If the proposed rule would affect your small business, organization, or governmental jurisdiction and you have questions concerning its provisions or options for compliance, please contact Ronald L. Houck, Port Safety, Security and Waterways Management Branch, at telephone number (410) 576–2674.

Collection of Information

This proposed rule would call for no new collection of information under the Paperwork Reduction Act of 1995 (44 U.S.C. 3501–3520).

Federalism

A rule has implications for federalism under Executive Order 13132, Federalism, if it has a substantial direct effect on State or local governments and would either preempt State law or impose a substantial direct cost of compliance on them. We have analyzed this proposed rule under that Order and have determined that it does not have implications for federalism.

Unfunded Mandates Reform Act

The Unfunded Mandates Reform Act of 1995 (2 U.S.C. 1531–1538) requires Federal agencies to assess the effects of their discretionary regulatory actions. In particular, the Act addresses actions that may result in the expenditure by a State, local, or tribal government, in the aggregate, or by the private sector of $100,000,000 or more in any one year. Though this proposed rule would not result in such an expenditure, we do discuss the effects of this rule elsewhere in this preamble.

Taking of Private Property

This proposed rule would not effect a taking of private property or otherwise have taking implications under Executive Order 12630, Governmental Actions and Interference with Constitutionally Protected Property Rights.

Civil Justice Reform

This proposed rule meets applicable standards in sections 3(a) and 3(b)(2) of Executive Order 12988, Civil Justice Reform, to minimize litigation, eliminate ambiguity, and reduce burden.

Protection of Children

We have analyzed this proposed rule under Executive Order 13045, Protection of Children from Environmental Health Risks and Safety Risks. This rule is not an economically significant rule and would not create an environmental risk to health or risk to safety that might disproportionately affect children.

Indian Tribal Governments

This proposed rule does not have tribal implications under Executive Order 13175, Consultation and Coordination with Indian Tribal Governments, because it would not have a substantial direct effect on one or more Indian tribes, on the relationship between the Federal Government and Indian tribes, or on the distribution of power and responsibilities between the Federal Government and Indian tribes. We invite your comments on how this proposed rule might impact tribal governments, even if that impact may not constitute a ''tribal implication'' under the Order.

Energy Effects

We have analyzed this proposed rule under Executive Order 13211, Actions Concerning Regulations That Significantly Affect Energy Supply, Distribution, or Use. We have determined that it is not a ''significant energy action'' under that order because it is not a ''significant regulatory action'' under Executive Order 12866 and is not likely to have a significant adverse effect on the supply, distribution, or use of energy. It has not been designated by the Administrator of the Office of Information and Regulatory Affairs as a significant energy action. Therefore, it does not require a Statement of Energy Effects under Executive Order 13211.

Environment

We have considered the environmental impact of this proposed rule and concluded that, under figure 2–1, paragraph (34)(g), of Commandant Instruction M16475.lD, this rule is categorically excluded from further environmental documentation because of the limited duration and scope of the regulation. A ''Categorical Exclusion Determination'' is available in the docket where indicted under **ADDRESSES.**

List of Subjects in 33 CFR Part 165

Harbors, Marine safety, Navigation (water), Reporting and recordkeeping requirements, Security measures, Waterways.

For the reasons discussed in the preamble, the Coast Guard proposes to amend 33 CFR part 165 as follows:

PART 165—REGULATED NAVIGATION AREAS AND LIMITED ACCESS AREAS

1. The authority citation for part 165 continues to read as follows:

Authority: 33 U.S.C. 1231; 50 U.S.C. 191, 33 CFR 1.05–1(g), 6.04–1, 6.04–6, 160.5; 49 CFR 1.46.

2. Add § 165.T05–006 to read as follows:

§ 165.T05–006 Security Zone; Potomac River, Washington Channel, Washington, D.C.

(a) *Location.* The following area is a security zone: all waters of the Washington Channel, from surface to bottom, encompassed by lines connecting the following points, beginning at 38°52′03″ N, 077°01′07″ W, thence to 38°52′03″ N, 077°01′14″ W, thence to 38°51′50″ N, 077°01′16″ W, thence to 38°51′50″ N, 077°01′07″ W, thence to 38°52′03″ N, 077°01′07″ W. These coordinates are based upon NAD 1983.

(b) *Regulations.* (1) In accordance with § 165.33, entry into this zone is prohibited unless authorized by the Coast Guard Captain of the Port, Baltimore, Maryland, or his or her designated representative. Section 165.33 also contains other general requirements.

(2) Persons desiring to transit the area of the security zone may contact the Captain of the Port at telephone number (410) 576–2693 or on VHF channel 16 (156.8 MHz) or VHF channel 22 (157.1 MHz) to seek permission to transit the area. If permission is granted, all persons and vessels shall comply with the instructions of the Captain of the Port or his or her designated representative.

(c) *Authority.* In addition to 33 U.S.C. 1231 and 50 U.S.C. 191, the authority for this section includes 33 U.S.C. 1226.

(d) *Effective period.* This section will be effective from 11 a.m. through 4 p.m. on May 30, 2002.

Dated: March 4, 2002.

R.B. Peoples,

Captain, U.S. Coast Guard, Captain of the Port, Baltimore, Maryland.

[FR Doc. 02–6764 Filed 3–19–02; 8:45 am]

BILLING CODE 4910–15–U

ENVIRONMENTAL PROTECTION AGENCY

40 CFR Part 52

[TX–104–1–7401b; FRL–7160–1]

Approval And Promulgation of Implementation Plans; Texas; Revisions to General Rules and Regulations for Control of Air Pollution by Permits for New Sources and Modifications

AGENCY: Environmental Protection Agency (EPA).

ACTION: Proposed rule; reopening of public comment period.

SUMMARY: The EPA is reopening the public comment period for a proposed approval of revisions to the Texas State Implementation Plan (SIP) published in the **Federal Register** on September 24, 2001.

DATES: Written comments must be received by EPA on or before April 19, 2002.

ADDRESSES: Written comments on this action should be addressed to Mr. David W. Neleigh, Chief, Air Permits Section (6PD–R), at the EPA Region 6 Office listed below. Copies of documents relevant to this action are available for public inspection during normal business hours at the following locations. Anyone wanting to examine these documents should make an appointment with the appropriate office at least two working days in advance.

Environmental Protection Agency, Region 6, Air Permits Section (6PD–R), 1445 Ross Avenue, Dallas, Texas 75202–2733.

Texas Natural Resource Conservation Commission, Office of Air Quality, 12124 Park 35 Circle, Austin, Texas 78753.

FOR FURTHER INFORMATION CONTACT: Stanley M. Spruiell, Air Permits Section at (214) 665–7212 or at *spruiell.stanley@epa.gov.*

SUPPLEMENTARY INFORMATION: In response to a request from the public, EPA is reopening the comment period for a proposed rule published in the **Federal Register** on September 24, 2001 (66 FR 48850), for approval of revisions to the Texas Natural Resource Conservation Commission (TNRCC) General Rules and TNRCC Regulations for Control of Air Pollution by Permits for New Sources and Modifications in the Texas SIP. These revisions were submitted by the Governor of Texas on August 31, 1993, and July 22, 1998. See the information provided in the direct final rule (66 FR 48796) located in the final rules section and the proposed rule (66 FR 48850) located in the proposed rules section of the September 24, 2001, **Federal Register**. The direct final rule was withdrawn November 23, 2001 (66 FR 58667).

List of Subjects in 40 CFR Part 52

Environmental protection, Air pollution control, Carbon monoxide, Intergovernmental relations, Lead, Nitrogen oxides, Ozone, Particulate matter, Reporting and recordkeeping requirements, Sulfur oxides, Volatile organic compounds.

Authority: 42 U.S.C. 7401 *et seq.*

Dated: March 11, 2002.

Lawrence E. Starfield,

Acting Regional Administrator, Region 6.

[FR Doc. 02–6721 Filed 3–19–02; 8:45 am]

BILLING CODE 6560–50–P

ENVIRONMENTAL PROTECTION AGENCY

40 CFR Part 194

[FRL–7161–4]

RIN 2060–AG85

Waste Characterization Program Documents Applicable to Transuranic Radioactive Waste From the Idaho National Engineering and Environmental Laboratory for Disposal at the Waste Isolation Pilot Plant

AGENCY: Environmental Protection Agency.

ACTION: Notice of availability; opening of public comment period.

SUMMARY: The Environmental Protection Agency (EPA) is announcing the availability of, and soliciting public comments for 30 days on, Department of Energy (DOE) documents applicable to characterization of transuranic (TRU) radioactive waste at the Idaho National Engineering and Environmental Laboratory (INEEL) proposed for disposal at the Waste Isolation Pilot Plant (WIPP). The documents (Item II–A2–38, Docket A–98–49) are available for review in the public dockets listed in **ADDRESSES.** EPA will conduct an inspection of waste streams, characterization systems and processes at INEEL to verify that the site can characterize transuranic waste in accordance with EPA's WIPP compliance criteria. EPA will perform this inspection the week of April 8, 2002. This notice of the inspection and comment period accords with 40 CFR 194.8.

DATES: EPA is requesting public comment on the documents. Comments must be received by EPA's official Air Docket on or before April 19, 2002.

ADDRESSES: Comments should be submitted to: Docket No. A–98–49, Air Docket, Room M–1500, U.S. Environmental Protection Agency, 401 M Street, SW, Mail Code 6102, Washington, DC 20460. The DOE documents are available for review in the official EPA Air Docket in Washington, DC, Docket No. A–98–49, Category II–A2, and at the following three EPA WIPP informational docket locations in New Mexico: in Carlsbad at the Municipal Library, Hours: Monday–Thursday, 10 a.m.–9 p.m., Friday–Saturday, 10 a.m.–6 p.m., and Sunday 1 p.m.–5 p.m.; in Albuquerque at the Government Publications Department, Zimmerman Library, University of New Mexico, Hours: vary by semester; and in Santa Fe at the New Mexico State Library, Hours: Monday–Friday, 9 a.m.–5 p.m..

As provided in EPA's regulations at 40 CFR part 2, and in accordance with normal EPA docket procedures, if copies of any docket materials are requested, a reasonable fee may be charged for photocopying. Air Docket A–98–49 in Washington, DC, accepts comments sent electronically or by fax (fax: 202–260–4400; e–mail: *a-and-r-docket@epa.gov*).

FOR FURTHER INFORMATION CONTACT: Ed Feltcorn, Office of Radiation and Indoor Air, (202) 564–9422. You can also call EPA's toll-free WIPP Information Line, 1–800–331–WIPP or visit our website at *http://www.epa/gov/radiation/wipp.*

SUPPLEMENTARY INFORMATION:

Background

DOE is developing the WIPP near Carlsbad in southeastern New Mexico as a deep geologic repository for disposal of TRU radioactive waste. As defined by the WIPP Land Withdrawal Act (LWA) of 1992 (Public Law 102–579), as amended (Public Law 104–201), TRU waste consists of materials containing elements having atomic numbers greater than 92 (with half-lives greater than twenty years), in concentrations greater than 100 nanocuries of alpha-emitting TRU isotopes per gram of waste. Much of the existing TRU waste consists of items contaminated during the production of nuclear weapons, such as rags, equipment, tools, and sludges.

On May 13, 1998, EPA announced its final compliance certification decision to the Secretary of Energy (published May 18, 1998, 63 FR 27354). This decision stated that the WIPP will comply with EPA's radioactive waste disposal regulations at 40 CFR part 191, subparts B and C.

The final WIPP certification decision includes conditions that (1) prohibit shipment of TRU waste for disposal at WIPP from any site other than the Los Alamos National Laboratories (LANL) until the EPA determines that the site has established and executed a quality assurance program, in accordance with §§ 194.22(a)(2)(i), 194.24(c)(3), and 194.24(c)(5) for waste characterization activities and assumptions (Condition 2 of appendix A to 40 CFR part 194); and (2) (with the exception of specific, limited waste streams and equipment at LANL) prohibit shipment of TRU waste for disposal at WIPP (from LANL or any other site) until EPA has approved the procedures developed to comply with the waste characterization requirements of § 194.22(c)(4) (Condition 3 of appendix A to 40 CFR part 194). The EPA's approval process for waste generator sites is described in § 194.8. As part of EPA's decision-making process, the DOE is required to submit to EPA appropriate documentation of quality assurance and waste characterization programs at each DOE waste generator site seeking approval for shipment of TRU radioactive waste to WIPP. In accordance with § 194.8, EPA will place such documentation in the official Air Docket in Washington, DC, and informational dockets in the State of New Mexico for public review and comment.

EPA will perform an inspection of INEEL's waste characterization systems and processes for TRU waste in accordance with Conditions 2 and 3 of the WIPP certification. Specifically, we will inspect the performance of new equipment " the Waste Assay Gamma Spectrometer (WAGS) system, SWEPP Gamma Ray Spectrometer (SGRS) system, and Data Review Expert System (DXRS) for NDA validation. In addition, solidified organic waste streams at INEEL will be examined for NDA characterization and certification. The inspection is scheduled to take place the week of April 8, 2002.

EPA has placed a number of documents pertinent to the inspection in the public docket described in **ADDRESSES.** The documents are listed as Item II–A2–38 in Docket A–98–49. In accordance with 40 CFR 194.8, as amended by the final certification decision, EPA is providing the public 30 days to comment on these documents.

If EPA determines as a result of the inspection that the proposed waste streams, processes, systems, and equipment at INEEL adequately control the characterization of transuranic waste, we will notify DOE by letter and place the letter in the official Air Docket in Washington, DC, as well as in the informational docket locations in New Mexico. A letter of approval will allow DOE to ship TRU waste to WIPP using the approved characterization processes. The EPA will not make a determination of compliance prior to the inspection or before the 30-day comment period has closed.

Information on the certification decision is filed in the official EPA Air Docket, Docket No. A–93–02 and is available for review in Washington, DC, and at three EPA WIPP informational docket locations in New Mexico. The dockets in New Mexico contain only major items from the official Air Docket in Washington, DC, plus those documents added to the official Air Docket since the October 1992 enactment of the WIPP LWA.

Dated: March 13, 2002.

Robert Brenner,

Acting Assistant Administrator for Air and Radiation.

[FR Doc. 02–6844 Filed 3–19–02; 8:45 am]

BILLING CODE 6560–50–P

ENVIRONMENTAL PROTECTION AGENCY

40 CFR Part 721

[OPPTS–50646; FRL–6820–7]

RIN 2070–AB27

Proposed Revocation of Significant New Uses of Certain Chemical Substances

AGENCY: Environmental Protection Agency (EPA).

ACTION: Proposed rule.

SUMMARY: EPA is proposing to revoke significant new use rules (SNURs) for eight substances promulgated under section 5(a)(2) of the Toxic Substances Control Act (TSCA) based on new data. Based on the new data the Agency no longer finds that activities not described in the corresponding TSCA section 5(e) consent orders for these chemical substances may result in significant changes in human or environmental exposure.

DATES: Comments, identified by docket control number OPPTS–50646 must be received on or before April 19, 2002.

ADDRESSES: Comments may be submitted by mail, electronically, or in person. Please follow the detailed instructions for each method as provided in Unit I.C. of the **SUPPLEMENTARY INFORMATION**. To ensure proper receipt by EPA, it is imperative that you identify docket control number OPPTS–50646 in the subject line on the first page of your response.

FOR FURTHER INFORMATION CONTACT: *For general information contact*: Barbara Cunningham, Acting Director, Environmental Assistance Division, Office of Pollution Prevention and Toxics (7408M), Environmental Protection Agency, 1200 Pennsylvania Ave., NW., Washington, DC 20460; telephone number: (202) 554–1404; e-mail address: TSCA-Hotline@epa.gov.

For technical information contact: James Alwood, Chemical Control Division, Office of Pollution Prevention and Toxics (7405M), Environmental Protection Agency, 1200 Pennsylvania Ave., NW., Washington, DC 20460; telephone number: (202) 564–8974; e-mail address: alwood.jim@epa.gov.

SUPPLEMENTARY INFORMATION:

I. General Information

A. Does this Action Apply to Me?

You may be potentially affected by this action if you manufacture, import, process, or use the chemical substances contained in this proposed revocation. Potentially affected categories and entities may include, but are not limited to:

Categories	NAICS codes	Examples of potentially affected entities
Chemical manufacturers	325	Manufacturers, importers, processors, and users of chemicals
Petroleum and coal product industries	324	Manufacturers, importers, processors, and users of chemicals

This listing is not intended to be exhaustive, but rather provides a guide for readers regarding entities likely to be affected by this action. Other types of entities not listed in the table in this unit could also be affected. The North American Industrial Classification System (NAICS) codes have been provided to assist you and others in determining whether or not this action applies to certain entities. To determine whether you or your business is affected by this action, you should carefully examine the applicability provisions in title 40 of the Code of Federal Regulations (CFR) at 40 CFR 721.5. If you have any questions regarding the applicability of this action to a particular entity, consult the technical person listed under **FOR FURTHER INFORMATION CONTACT**.

B. How Can I Get Additional Information, Including Copies of this Document and Other Related Documents?

1. *Electronically*. You may obtain electronic copies of this document, and certain other related documents that might be available electronically, from the EPA Internet Home Page at http://www.epa.gov/. To access this document, on the Home Page select ''Laws and Regulations,'' ''Regulations and Proposed Rules,'' and then look up the entry for this document under the ''**Federal Register—**Environmental Documents.'' You can also go directly to the **Federal Register** listings at http://www.epa.gov/fedrgstr/. A frequently updated electronic version of 40 CFR part 721 is available at http://www.access.gpo.gov/nara/cfr/cfrhtml_00/Title_40/40cfr721_00.html, a beta site currently under development.

2. *In person*. The Agency has established an official record for this action under docket control number OPPTS–50646. The official record consists of the documents specifically referenced in this action, any public comments received during an applicable comment period, and other information related to this action, including any information claimed as Confidential Business Information (CBI). This official record includes the documents that are physically located in the docket, as well as the documents that are referenced in those documents. The public version of the official record does not include any information claimed as CBI. The public version of the official record, which includes printed, paper versions of any electronic comments submitted during an applicable comment period, is available for inspection in the TSCA Nonconfidential Information Center, North East Mall Rm. B–607, Waterside Mall, 401 M St., SW., Washington, DC. The Center is open from noon to 4 p.m., Monday through Friday, excluding legal holidays. The telephone number for the Center is (202) 260–7099.

C. How and to Whom Do I Submit Comments?

You may submit comments through the mail, in person, or electronically. To ensure proper receipt by EPA, it is imperative that you identify docket control number OPPTS–50646 in the subject line on the first page of your response.

1. *By mail*. Submit your comments to: Document Control Office (7407), Office of Pollution Prevention and Toxics (OPPT), Environmental Protection Agency, 1200 Pennsylvania Ave., NW., Washington, DC 20460.

2. *In person or by courier*. Deliver your comments to: OPPT Document Control Office (DCO) in EPA East Building Rm. 6428, 1201 Constitution Ave. NW., Washington, DC. The DCO is open from 8 a.m. to 4 p.m., Monday through Friday, excluding legal holidays. The telephone number for the DCO is (202) 564–8930.

3. *Electronically*. You may submit your comments electronically by e-mail to: oppt.ncic@epa.gov, or mail your computer disk to the address identified above. Do not submit any information electronically that you consider to be CBI. Electronic comments must be submitted as an ASCII file avoiding the use of special characters and any form of encryption. Comments will also be accepted on standard disks in WordPerfect 6.1/8.0 or ASCII file format. All comments in electronic form must be identified by docket control number OPPTS–50646. Electronic comments may also be filed online at many Federal Depository Libraries.

D. How Should I Handle CBI That I Want to Submit to the Agency?

Do not submit any information electronically that you consider to be CBI. You may claim information that you submit to EPA in response to this document as CBI by marking any part or all of that information as CBI. Information so marked will not be disclosed except in accordance with procedures set forth in 40 CFR part 2. In addition to one complete version of the comment that includes any information claimed as CBI, a copy of the comment that does not contain the information claimed as CBI must be submitted for inclusion in the public version of the official record. Information not marked confidential will be included in the public version of the official record without prior notice. If you have any questions about CBI or the procedures for claiming CBI, please consult the technical person listed under **FOR FURTHER INFORMATION CONTACT**.

E. What Should I Consider as I Prepare My Comments for EPA?

We invite you to provide your views on the various options we propose, new approaches we haven't considered, the potential impacts of the various options (including possible unintended consequences), and any data or information that you would like the Agency to consider during the development of the final action. You may find the following suggestions helpful for preparing your comments:

1. Explain your views as clearly as possible.

2. Describe any assumptions that you used.

3. Provide copies of any technical information and/or data you used that support your views.

4. If you estimate potential burden or costs, explain how you arrived at the estimate that you provide.

5. Provide specific examples to illustrate your concerns.

6. Offer alternative ways to improve the proposed revocation.

7. Make sure to submit your comments by the deadline in this document.

8. To ensure proper receipt by EPA, be sure to identify the docket control number assigned to this action in the subject line on the first page of your response. You may also provide the name, date, and **Federal Register** citation.

II. Background

A. What Action is the Agency Taking?

In the **Federal Register** referenced for each substance, OPPTS–50601, September 23, 1992 (57 FR 44068), OPPTS–50620, March 1, 1995 (60 FR 11044) (FRL–4868–4), and OPPTS–50623, December 2, 1996 (61 FR 63737) (FRL–4964–3), establishing significant new uses for the substances, EPA issued a SNUR. Because of additional data EPA has received for these substances, EPA is proposing to revoke the significant new use and recordkeeping requirements for the following chemical substances under 40 CFR part 721, subpart E. In this unit, EPA provides a brief description for each substance, including its premanufacture notice (PMN) number, chemical name (generic name if the specific name is claimed as CBI), CAS number (if assigned), basis for the revocation of the TSCA section 5(e) consent order for the substance, and the CFR citation. Further background information for the substances is contained in Unit I.B.2 of this document.

PMN Number P–89–764
Chemical name: Neodecaneperoxoic acid, 1,1,3,3-tetramethylbutyl ester.
CAS number: 51240–95–0.
Federal Register *publication date and reference:* September 23, 1992 (57 FR 44068).
Docket number: OPPTS–50601.
Basis for revocation of SNUR: EPA issued a TSCA section 5(e) consent order between EPA and the PMN submitter for this substance based on a potential unreasonable risk of cancer by analogy to structurally similar peroxides. Based on the results of test data developed by an industry consortium to address potential toxicity of peroxides, EPA has concluded that available information does not support identification of peroxides as potential carcinogens. Therefore, EPA determined that it could no longer conclude that the manufacturing, processing, and use of P–89–764 may present an unreasonable risk under section 5(e) of TSCA and has, therefore, revoked the consent order for P–89–764. EPA can no longer make the finding that activities not described in the TSCA section 5(e) consent order may result in significant changes in human exposure.
CFR citation: 40 CFR 721.5300.

PMN Number P–93–193
Chemical name: Propanol, [2-(1,1-dimethylethoxy)methylethoxy]-.
CAS number: 132739–31–2.
Federal Register *publication date and reference:* March 1, 1995 (60 FR 11044).
Docket number: OPPTS–50620.
Basis for revocation of SNUR: EPA issued a consent order between EPA and the PMN submitter requiring submission to EPA of certain human health and environmental toxicity testing before manufacturing a specified amount of the PMN substance based on the fact that the PMN substance would be produced in substantial quantities, and that there might be significant or substantial human exposure to the PMN substance. Based on the results of these studies, potential exposures, and the toxicity of the compounds the PMN substance will replace, EPA determined that it could no longer conclude that the manufacturing, processing, and use of P–93–193 may present an unreasonable risk under section 5(e) of TSCA and has, therefore, revoked the consent order for P–93–193. EPA can no longer make the finding that activities not described in the TSCA section 5(e) consent order may result in significant changes in human exposure.
CFR citation: 40 CFR 721.8170.

PMN Numbers P–94–1634/1635/1636/1637/1638/1639
Chemical name: Fatty acids, C(14-18)-unsaturated, branched and linear, methyl and butyl esters.
CAS number: Not available.
Federal Register *publication date and reference:* December 2, 1996 (61 FR 63737).
Docket number: OPPTS–50623.
Basis for revocation of SNUR: EPA issued a consent order between EPA and the PMN submitter requiring submission to EPA of certain human health toxicity testing before manufacturing a specified amount of the PMN substances based on the fact that the PMN substances would be produced in substantial quantities, and that there might be significant or substantial human exposure to the PMN substances. EPA revoked the consent order based on the PMN submitter's commitment to sponsor the substances under EPA's High Production Volume (HPV) Challenge Program and the expectation that the information and/or test data developed by the company pursuant to its HPV commitment will satisfy EPA's information needs for the PMN substances. EPA can no longer make the finding that activities not described in the TSCA section 5(e) consent order may result in significant changes in human exposure.
CFR citation: 40 CFR 721.3628.

B. What is the Agency's Authority for Taking this Action?

Section 5(a)(2) of TSCA (15 U.S.C. 2604(a)(2)) authorizes EPA to determine that a use of a chemical substance is a ''significant new use.'' EPA must make this determination by rule after considering all relevant factors, including those listed in section 5(a)(2) of TSCA. Once EPA determines that a use of a chemical substance is a significant new use, section 5(a)(1)(B) of TSCA requires persons to submit a notice to EPA at least 90 days before they manufacture, import, or process the substance for that use. The mechanism for reporting under this requirement is established under 40 CFR 721.5.

During review of the PMNs submitted for the chemical substances that are the subject of this proposed revocation, EPA concluded that regulation was warranted based on available information that indicated activities not described in the TSCA section 5(e) consent order might result in significant changes in human or environmental exposure as described in section 5(a)(2) of TSCA. Based on these findings, SNURs were promulgated.

EPA has revoked the TSCA section 5(e) consent orders that are the basis for these SNURs and no longer finds that activities other than those described in the TSCA section 5(e) consent orders may result in significant changes in human or environmental exposure. The revocation of SNUR provisions for these substances is consistent with the findings set forth in the preamble to the proposed revocation of each individual SNUR.

Therefore, EPA is proposing to revoke the SNUR provisions for these chemical substances. When this revocation becomes final, EPA will no longer require notice of intent to manufacture, import, or process these substances. In addition, export notification under section 12(b) of TSCA will no longer be required.

III. Regulatory Assessment Requirements

This proposed rule revokes or eliminates an existing regulatory requirement and does not contain any new or amended requirements. As such, the Office of Management and Budget (OMB) has exempted these types of actions from review under Executive Order 12866, entitled ''*Regulatory Planning and Review*'' (58 FR 51735, October 4, 1993).

Since this proposed rule does not impose any requirements, it does not contain any information collections subject to approval under the Paperwork Reduction Act (PRA), 44 U.S.C. 3501 *et seq.*, or require any other action under Title II of the Unfunded Mandates Reform Act of 1995 (UMRA) (Pub. L. 104–4).

Nor does it require any prior consultation as specified by Executive Order 12875, entitled ''*Enhancing the Intergovernmental Partnership*'' (58 FR 58093, October 28, 1993), or special considerations as required by Executive Order 12898, entitled ''*Federal Actions to Address Environmental Justice in Minority Populations and Low-Income Populations*'' (59 FR 7629, February 16, 1994) or require OMB review in accordance with Executive Order 13045, entitled ''*Protection of Children from Environmental Health Risks and Safety Risks*'' (62 FR 19885, April 23, 1997).

On August 4, 1999, President Clinton issued a new executive order on ''*Federalism*,'' Executive Order 13132 (64 FR 43255, August 10, 1999). This proposed rule will not have a substantial direct effect on States, on the relationship between the national government and the States, or on the distribution of power and responsibilities among the various levels of government, as specified in Executive Order 13132.

In addition, pursuant to section 605(b) of the Regulatory Flexibility Act (RFA) (5 U.S.C. 601 *et seq.*), the Agency has determined that SNUR revocations, which eliminate requirements without imposing any new ones, have no adverse economic impacts.

This proposed rule is not subject to Executive Order 13211, ''*Actions Concerning Regulations That Significantly Affect Energy Supply, Distribution, or Use*'' (66 FR 28355, May 22, 2001) because it is not a significant regulatory action under Executive Order 12866.

List of Subjects in 40 CFR Part 721

Environmental protection, Chemicals, Hazardous substances, Reporting and recordkeeping requirements.

Dated: March 1, 2002.

William H. Sanders, III,

Office Director, Office of Pollution Prevention and Toxics.

Therefore, it is proposed that 40 CFR part 721 be amended as follows:

PART 721—[AMENDED]

1. The authority citation for part 721 would continue to read as follows:

Authority: 15 U.S.C. 2604, 2607, and 2625(c).

§§ 721.3628, 721.5300, and 721.8170 [Removed]

2. By removing §§ 721.3628, 721.5300, and 721.8170.

[FR Doc. 02–6724 Filed 3–19–02; 8:45 am]

BILLING CODE 6560–50–S

FEDERAL COMMUNICATIONS COMMISSION

47 CFR Part 73

[DA 02–495, MM Docket No. 99–282, RM–9710]

FM Broadcasting Services; Littlefield, AZ

AGENCY: Federal Communications Commission.

ACTION: Petition denial; dismissal of application for review.

SUMMARY: This document dismisses, at the request of Mountain West Broadcasting, its application for review of a *Memorandum Opinion and Order* in this proceeding, 65 FR 69693, published November 20, 2000.[1] *The Memorandum Opinion and Order* affirmed an earlier *Report and Order* in this proceeding, 65 FR 25463, published May 2, 2000, which had denied Mountain West's request to allot Channel 265C to Littlefield, Arizona.

FOR FURTHER INFORMATION CONTACT: Andrew J. Rhodes, Mass Media Bureau, (202) 418–2120.

SUPPLEMENTARY INFORMATION: This is a summary of the Memorandum Opinion and Order, MM Docket 99–282, adopted February 20, 2002, and released March 1, 2002. The full text of this Commission decision is available for inspection and copying during normal business hours in the Commission's Reference Information Center (room CY–A257), 445 12th Street, SW., Washington, DC 20554. The complete text of this decision may be also purchased from the Commission's copy contractor, Qualex International Portals II, 445 12th Street, SW., Room CY–B402, Washington, DC, 20554.

Federal Communications Commission.

John A. Karousos,

Chief, Allocations Branch, Policy and Rules Division, Mass Media Bureau.

[FR Doc. 02–6377 Filed 3–19–02; 8:45 am]

BILLING CODE 6712–01–P

[1] This document inadvertently appeared in the Rules section. It should have appeared in the Proposed Rules section.

DEPARTMENT OF TRANSPORTATION

Transportation Security Administration

49 CFR Part 1511

[Docket No. TSA–2002–11334]

RIN 2110–AA02

Aviation Security Infrastructure Fees

AGENCY: Transportation Security Administration, DOT.

ACTION: Extension of comment period.

SUMMARY: This document announces the extension of the comment period on the Transportation Security Administration's (TSA) Aviation Security Infrastructure Fee interim final rule. TSA has decided to grant, in part, a request for an extension of the comment period and will extend the comment period for fifteen (15) days. The comment period will now end on April 2, 2002.

DATES: The comment period is being extended from March 18, 2002, to April 2, 2002.

ADDRESSES: Submit written, signed comments to TSA Docket No. 2002–11334 , the Docket Clerk, U.S. DOT Dockets, Room PL–401, 400 Seventh Street, SW., Washington, DC 20590–0001. All comments received will be available for examination at the above address between 9 a.m. and 5 p.m., e.t., Monday through Friday, except Federal holidays. Those desiring notification of receipt of comments must include a self-addressed, stamped envelope or postcard on which the following statement is made: ''Comments to Docket No. TSA–2002–11334.'' The post card will be date stamped and mailed to the sender. Comments also may be sent electronically to the Dockets Management System (DMS) at: *http://dms.dot.gov* at any time. Those who wish to file comments electronically should follow the instructions on the DMS web site.

FOR FURTHER INFORMATION CONTACT: For guidance involving technical matters: Randall Fiertz, Deputy Director, Cost and Performance Management, Federal Aviation Administration, c/o Department of Transportation (DOT), Office of the Secretary, Office of the Assistant Secretary for Budget and Programs, 400 Seventh St., SW., Room 10101, Washington, DC 20590; telephone (202) 366–9192. For other matters: Rita M. Maristch, Department of Transportation, Office of the General Counsel, Office of Environmental, Civil Rights and General Law, 400 Seventh St., SW., Room 10102, Washington, DC 20590; telephone (202) 366–9161. Office hours are from 9:00 a.m. to 5:30 p.m., e.t. Monday through Friday, except Federal holidays.

SUPPLEMENTARY INFORMATION:

Availability of the Interim Final Rule and Comments Received

An electronic copy of this document and the interim final rule may be downloaded using a modem and suitable communications software from the Government Printing Office's Electronic Bulletin Boards Service at (202) 512–1661. Internet users may reach the **Federal Register**'s home page at: *http://www.nara.gov/fedreg* and the Government Printing Office's database at: *http://www.access.gpo.gov*.

Internet users can access this document and all other documents and comments received by TSA through DOT's docket management system web site, *http://dms.dot.gov.* It is available 24 hours each day, 365 days each year. Please follow the instructions online for more information and help.

Comment Period Extension

On March 11, 2002, the Air Carrier Association of America (ACAA), the Cargo Airline Association (CAA), the National Air Carrier Association (NACA) and the Regional Airline Association (RAA), filed a petition for a thirty (30) day extension of the comment period on TSA's Aviation Security Infrastructure Fee interim final rule (see 67 FR 7926, February 20, 2002). Although TSA believes that the comment period is adequate, TSA has decided to grant, in part, the petitioners' request for an extension and will extend the comment period for fifteen (15) days. The comment period will now end on April 2, 2002. This extension will allow the commercial airline industry and other interested entities or individuals additional time to complete their comments on the interim final rule.

Issued in Washington, DC, on March 18, 2002.

John W. Magaw,

Under Secretary of Transportation for Security.

[FR Doc. 02–6852 Filed 3–18–02; 1:59 pm]

BILLING CODE 4910–62–P

Proposed Rules

Federal Register
Vol. 67, No. 54
Wednesday, March 20, 2002

This section of the FEDERAL REGISTER contains notices to the public of the proposed issuance of rules and regulations. The purpose of these notices is to give interested persons an opportunity to participate in the rule making prior to the adoption of the final rules.

DEPARTMENT OF AGRICULTURE

Office of the Secretary

7 CFR Part 1

Procedures Relating to Awards Under the Equal Access to Justice Act

AGENCY: Office of the Secretary, USDA.

ACTION: Proposed rule.

SUMMARY: The U.S. Department of Agriculture (''USDA'') proposes to amend its regulations implementing the Equal Access to Justice Act (''EAJA''). The proposed amendments incorporate modifications enacted in the Small Business Regulatory Enforcement Fairness Act of 1996.

DATES: In order to be considered, comments should be submitted by May 20, 2002.

ADDRESSES: Comments should be directed to Barbara Good, Attorney Advisor, Room 3311 South Building, Office of the General Counsel, U.S. Department of Agriculture, 14th and Independence Avenue, SW., Washington, DC 20250–1400.

FOR FURTHER INFORMATION CONTACT: Barbara S. Good, Attorney Advisor, Room 3311 South Building, Office of the General Counsel, U.S. Department of Agriculture, 14th and Independence Avenue, SW, Washington, DC 20250–1415; telephone (202) 720–8045.

SUPPLEMENTARY INFORMATION: In the Small Business Regulatory Enforcement Fairness Act of 1996 (''SBREFA''), Pub. L. No. 104–121, Title II, Mar. 29, 1996, 100 Stat. 857 to 874, Congress amended EAJA in two significant respects with regard to administrative proceedings.

First, Congress amended 5 U.S.C. 504(a) by adding a new basis for recovery under EAJA. Under prior law, only a ''prevailing party'' other than the United States in an adversary adjudication before an agency was eligible for recovery of fees and expenses. 5 U.S.C. 504(a)(1). Pursuant to new paragraph (a)(4), a party to an adversary adjudication arising from an agency action to enforce the party's compliance with a statutory or regulatory requirement may be entitled to reimbursement of fees and expenses. In such enforcement cases, where the demand by the agency is ''substantially in excess'' of the decision of the adjudicative officer and is ''unreasonable'' when compared with such decision under the facts and circumstances of the case, the agency adjudicative officer is directed to award to an eligible party the fees and other expenses related to defending against the excessive demand. Award is qualified if the party has committed a willful violation of law or otherwise acted in bad faith, or special circumstances make an award unjust.

SBREFA further amended Section 504(b)(1) to add new subparagraph (F), which defines the term ''demand'' as ''the express demand of the agency which led to the adversary adjudication, but does not include a recitation by the agency of the maximum statutory penalty (i) in the administrative complaint, or (ii) elsewhere when accompanied by an express demand for a lesser amount.''

SBREFA also added, in 5 U.S.C. 504(b)(1)(B), a new category of applicants eligible for fees based on a claim of excessive demand. In addition to the other categories of eligible applicants, a small entity as defined in 5 U.S.C. 601 will be eligible for reimbursement with respect to a claim of excessive demand in a regulatory or statutory enforcement action.

The second major change, in 5 U.S.C. 504(b)(1)(A), increased from $75 per hour to $125 per hour the maximum rate for fees awardable. The qualifying language ''unless the agency determines by regulation that an increase in the cost of living or a special factor, such as the limited availability of qualified attorney or agents for the proceeding involved justifies a higher fee'' remains. Departmental rules at 7 CFR 1.186 currently implementing EAJA attorney fees set a cap of $75 per hour. It is appropriate to amend 7 CFR 1.186 to reflect the statutory increase to $125 per hour.

In view of these statutory changes, the Department is proposing conforming amendments to its regulations. In addition, the Department is making minor changes to modify obsolete provisions related to effective dates, and to correct minor errors, and to make minor stylistic changes.

The Department retains its stance concerning the applicability of EAJA to National Appeals Division proceedings as set forth in the preamble to the final rule for National Appeals Division rules of procedure at 64 FR 33367, June 23, 1999.

This proposed rule has been reviewed under Executive Order No. 12866 and has been determined that it is not a ''significant regulatory action'' since it will not have an annual effect on the economy of $100 million or more or adversely and materially affect a sector of the economy, productivity, competition, jobs, the environment, public health or safety, of State, local or tribal governments or communities. This proposed rule will not create any serious inconsistencies, or otherwise materially alter the budgetary impact of entitlements, grants, user fees, or loan programs, or the rights and obligations of recipients thereof, and does not raise novel legal or policy issues arising out of legal mandates, the President's priorities or principles set forth in E.O. 12866. Therefore, this proposed rule has not been reviewed by the Office of Management and Budget.

USDA certifies that this rule will not have a significant impact on a substantial number of small entities as defined in the Regulatory Flexibility Act, Pub. L. No. 96–534, as amended (5 U.S.C. 601 *et seq.*).

USDA has determined that the provisions of the Paperwork Reduction Act as amended, 44 U.S.C. chapter 35, do not apply to any collections of information contained in this rule because any such collections of information are made during the conduct of administrative action involving an agency against specific individuals or entities. 5 CFR 1320.4(a)(2).

List of Subjects in 7 CFR Part 1

Administrative practice and procedures.

Accordingly, 7 CFR, Subtitle A, Part 1, Subpart J is proposed to be revised to read as follows:

PART 1—[AMENDED]

Subpart J—Procedures Relating to Awards Under the Equal Access to Justice Act in Proceedings Before the Department

Authority: 5 U.S.C. 504(c)(1).

General Provisions

Sec.
1.180 Definitions.
1.181 Purpose of these rules.
1.182 When EAJA applies.
1.183 Proceedings covered.
1.184 Eligibility of applicants.
1.185 Standards for awards.
1.186 Allowable fees and expenses.
1.187 Rulemaking on maximum rates for attorney fees.
1.188 Awards against other agencies.
1.189 Delegations of authority.

Information Required From Applicants

1.190 Contents of application.
1.191 Net worth exhibit.
1.192 Documentation of fees and expenses.
1.193 Time for filing application.

Procedures for Considering Applications

1.194 Filing and service of documents.
1.195 Answer to application.
1.196 Reply.
1.197 Comments by other parties.
1.198 Settlement.
1.199 Further proceedings.
1.200 Decision.
1.201 Department review.
1.202 Judicial review.
1.203 Payment of award.

General Provisions

§ 1.180 Definitions.

(a) The definitions contained in § 1.132 of this part are incorporated into and made applicable to this subpart.

(b) *Adjudicative Officer* means an administrative law judge, administrative judge, or other person assigned to conduct a proceeding covered by EAJA.

(c) *Agency* means an organizational unit of the Department whose head reports to an official in the Office of the Secretary.

(d) *Agency* counsel means the attorney from the Office of the General Counsel representing the agency of the Department administering the statute involved in the proceeding.

(e) *Days* means calendar days.

(f) *Department* means the United States Department of Agriculture.

§ 1.181 Purpose of these rules.

The Equal Access to Justice Act, 5 U.S.C. 504 (called ''EAJA'' in this subpart), provides for the award of attorney fees and other expenses to eligible individuals and entities who are parties to certain administrative proceedings (called ''adversary adjudications'') before the Department. An eligible party may receive an award when it prevails over the Department unless the position of the Department was substantially justified or special circumstances make an award unjust. Alternatively, an eligible party may receive an award in connection with an adversary adjudication arising from an agency action to enforce the party's compliance with a statutory or regulatory requirement where the demand by the agency is substantially in excess of the decision of the adjudicative officer and is unreasonable when compared with such decision under the facts and circumstances of the case. The rules in this subpart describe the parties eligible for awards and the proceedings that are covered. They also explain how to apply for awards, and the procedures and standards that the Department will use to make awards.

§ 1.182 When EAJA applies.

EAJA applies to any adversary adjudication pending or commenced before the Department on or after August 5, 1985, except with respect to a proceeding covered under § 1.183(a)(1)(iii) of this part, which is effective on or after October 21, 1986. In addition, the provisions of § 1.185(b) relating to award for excessive demand apply only to adversary adjudications commenced on or after March 29, 1996. Changes in maximum rates for attorney fees are effective as of [the effective date of the final rule].

§ 1.183 Proceedings covered.

(a)(1) The rules in this subpart apply to adversary adjudications. These are:

(i) Adjudications required by statute to be conducted by the Department under 5 U.S.C. 554 in which the position of the Department or any other agency of the United States, or any component of an agency, is presented by an attorney or other representative who enters an appearance and participates in the proceeding,

(ii) Appeals of decisions of contracting officers made pursuant to section 6 of the Contract Disputes Act of 1978 (41 U.S.C. 605) before the Agriculture Board of Contract Appeals as provided in section 8 of that Act (41 U.S.C. 607), and

(iii) Any hearing conducted under chapter 38 of title 31, United States Code.

(2) Any proceeding in which the Department may prescribe a lawful present or future rate is not covered by EAJA. Proceedings to grant or renew licenses also are excluded, but proceedings to modify, suspend, or revoke licenses are covered if they are otherwise ''adversary adjudications.'' The proceedings covered include adversary adjudications under the following statutory provisions.

Agricultural Marketing Agreement Act of 1937 (7 U.S.C. 608c(15)(A))
Animal Quarantine Laws (21 U.S.C. 104, 117, 122, 127, 134e, and 135a)
Animal Welfare Act (7 U.S.C. 2149)
Archaeological Resources Protection Act (16 U.S.C. 470ff)
Beef Research and Information Act (7 U.S.C. 2912)
Capper-Volstead Act (7 U.S.C. 292)
Cotton Research and Promotion Act (7 U.S.C. 2111)
Egg Products Inspection Act (21 U.S.C. 1047)
Egg Research and Consumer Information Act (7 U.S.C. 2713, 2714(b))
Endangered Species Act (16 U.S.C. 1540(a))
Federal Land Policy and Management Act (43 U.S.C. 1766)
Federal Meat Inspection Act (21 U.S.C. 604, 606, 607(e), 608, 671)
Federal Seed Act (7 U.S.C. 1599)
Horse Protection Act (15 U.S.C. 1823(c), 1825)
Packers and Stockyards Act (7 U.S.C. 193, 204, 213, 218d, 221)
Perishable Agricultural Commodities Act (7 U.S.C. 499c(c), 499d(d), 499f(c), 499h(a), 499h(b), 499h(c), 499i, 499m(a))
Plant Protection Act (7 U.S.C. 2279e, 7734(b), 7736)
Potato Research and Promotion Act (7 U.S.C. 2620)
Poultry Products Inspection Act (21 U.S.C. 455, 456, 457(d), 467)
Swine Health Protection Act (7 U.S.C. 3804(b), 3805(a))
U.S. Cotton Standards Act (7 U.S.C. 51b, 53)
U.S. Grain Standards Act (7 U.S.C. 79(g)(3), 85, 86)
U.S. Warehouse Act (7 U.S.C. 246, 253)
Virus-Serum-Toxin Act (21 U.S.C. 156)
Wheat and Wheat Foods Research and Nutrition Education Act (7 U.S.C. 3409)

(b) The failure of the Department to identify a type of proceeding as an adversary adjudication shall not preclude the filing of an application by a party who believes the proceeding is covered by EAJA; whether the proceeding is covered will then be an issue for resolution in proceedings on the application.

(c) If a proceeding includes both matters covered by EAJA and matters specifically excluded from coverage, any award made will include only fees and expenses related to covered issues.

§ 1.184 Eligibility of applicants.

(a) To be eligible for an award of attorney fees and other expenses under EAJA, the applicant must meet one of the following conditions:

(1) The applicant must be a prevailing party to the adversary adjudication for which it seeks an award; or

(2) The applicant must be a party to an adversary adjudication arising from an agency action to enforce the party's

compliance with a statutory or regulatory requirement in which the demand by the agency was substantially in excess of the decision of the adjudicative officer and the demand is unreasonable when compared with such decision under the facts and circumstances of the case.

(b) In addition to the criteria set out in paragraph (a) of this section, a party seeking an award must be one of the following:

(1) An individual with a net worth of not more than $2 million;

(2) The sole owner of an unincorporated business who has a net worth of not more than $7 million, including both personal and business interests, and not more than 500 employees;

(3) A charitable or other tax-exempt organization described in section 501(c)(3) of the Internal Revenue Code (26 U.S.C. 501(c)(3)) with not more than 500 employees;

(4) A cooperative association as defined in section 15(a) of the Agricultural Marketing Act (2 U.S.C. 1141j(a)) with not more than 500 employees;

(5) Any other partnership, corporation, association, unit of local government, or organization with a net worth of not more than $7 million and nor more than 500 employees;

(6) For purposes only of paragraph (a)(2) of this section, a small entity as defined in 5 U.S.C. 601.

(c) For the purpose of eligibility, the net worth and number of employees of an applicant shall be determined as of the date the adversary adjudication was initiated: Provided, that for purposes of eligibility in proceedings covered by § 1.183(a)(1)(ii) of this part, the net worth and number of employees of an applicant shall be determined as of the date the applicant filed its appeal under 41 U.S.C. 606.

(d) In interpreting the criteria set forth in paragraph (b) of this section, the following apply:

(1) An applicant who owns an unincorporated business will be considered as an ''individual'' rather than a ''sole owner of an unincorporated business'' if the issues on which the applicant prevails are related primarily to personal interests rather than to business interests.

(2) The employees of an applicant include all persons who regularly perform services for remuneration for the applicant, under the applicant's direction and control. Part-time employees shall be included on a proportional basis.

(3) The net worth and number of employees of the applicant and all of its affiliates shall be aggregated to determine eligibility. Any individual, corporation, or other entity that directly or indirectly controls or owns a majority of the voting shares or other interest of the applicant, or any corporation or other entity of which the applicant directly or indirectly owns or controls a majority of the voting shares or other interest, will be considered an affiliate for purposes of this subpart, unless the adjudicative officer determines such treatment would be unjust and contrary to the purposes of EAJA in light of the actual relationship between the affiliated entities. In addition, the adjudicative officer may determine that financial relationships of the applicant other than those described in this paragraph constitute special circumstances that would make an award unjust.

(4) An applicant that participates in a proceeding primarily on behalf of one or more other person or entity that would be ineligible is not itself eligible for an award.

§ 1.185 Standards for awards.

(a) *Prevailing party.* (1) A prevailing applicant may receive an award for fees and expenses incurred in connection with a proceeding, or in a significant and discrete substantive portion of the proceeding, unless the position of the Department was substantially justified. The position of the Department includes, in addition to the position taken by the Department in the adversary adjudication, the action or failure to act by the Department upon which the adversary adjudication is based. The burden of proof that an award should not be made to an eligible prevailing applicant because the position of the Department was substantially justified is on the agency.

(2) An award to a prevailing applicant will be reduced or denied if the applicant has unduly or unreasonably protracted the proceeding or if special circumstances make the award sought unjust.

(b) *Excessive demand.* (1) If, in an adversary adjudication arising from an agency action to enforce a party's compliance with a statutory or regulatory requirement, the demand by the agency is substantially in excess of the decision of the adjudicative officer and is unreasonable when compared with such decision under the facts and circumstances of the case, the adjudicative officer shall award to the party the fees and other expenses related to defending against the excessive demand, unless the party has committed a willful violation of law or otherwise acted in bad faith, or special circumstances make an award unjust. Fees and expenses awarded under this paragraph shall be paid only as a consequence of appropriations provided in advance.

(2) ''Demand'' means the express demand of the agency which led to the adversary adjudication, but does not include a recitation by the agency of the maximum statutory penalty:

(i) In the administrative complaint, or

(ii) Elsewhere when accompanied by an express demand for a lesser amount.

§ 1.186 Allowable fees and expenses.

(a) Awards will be based on rates customarily charged by persons engaged in the business of acting as attorneys, agents, and expert witnesses, even if the services were made available without charge or at reduced rate to the applicant.

(b) No award for the fee of an attorney or agent under the rules in this subpart may exceed $125.00 per hour. No award to compensate an expert witness may exceed the highest rate at which the Department pays expert witnesses, which is set out at § 1.150 of this part. However, an award also may include the reasonable expenses of the attorney, agent, or witness as a separate item, if the attorney, agent, or witness ordinarily charges clients separately for such expenses.

(c) In determining the reasonableness of the fee sought for an attorney, agent, or expert witness, the adjudicative officer shall consider the following:

(1) If the attorney, agent or witness is in private practice, his or her customary fee for similar services, or if an employee of the applicant, the fully allocated cost of the services;

(2) The prevailing rate for similar services in the community in which the attorney, agent, or witness ordinarily performs services;

(3) The time actually spent in the representation of the applicant;

(4) The time reasonably spent in light of the difficulty or complexity of the issues in the proceeding; and

(5) Such other factors as may bear on the value of the services provided.

(d) The reasonable cost of any study, analysis, engineering report, test, project or similar matter prepared on behalf of a party may be awarded, to the extent that the charge for the service does not exceed the prevailing rate for similar services, and the study or other matter was necessary for preparation of the applicant's case.

§ 1.187 Rulemaking on maximum rates for attorney fees.

(a) If warranted by an increase in the cost of living or by special

circumstances (such as limited availability of attorneys qualified to handle certain types of proceedings), the Department may adopt regulations providing that attorney fees may be awarded at a rate higher than $125 per hour in some or all of the types of proceedings covered by this part. The Department will conduct any rulemaking proceedings for this purpose under the informal rulemaking procedures of the Administrative Procedure Act.

(b) Any person may file with the Department a petition for rulemaking to increase the maximum rate for attorney fees in accordance with § 1.28 of this part. The petition should identify the rate the petitioner believes the Department should establish and the types of proceedings in which the rate should be used. It also should explain fully the reasons why the higher rate is warranted. The Department will respond to the petition within 60 days after it is filed, by initiating a rulemaking proceeding, denying the petition, or taking other appropriate action.

§ 1.188 Awards against other agencies.

If an applicant is entitled to an award because it prevails over another agency of the United States that participates in a proceeding before the Department and takes a position that is not substantially justified, the award or an appropriate portion of the award shall be made against that agency.

§ 1.189 Delegations of authority.

The Secretary of Agriculture delegates to the Judicial Officer, except as otherwise delegated, authority to take final action on matters pertaining to EAJA in proceedings covered by the rules in this subpart. The Secretary by order or regulation may delegate authority to take final action on matters pertaining to EAJA in particular cases or categories of cases to other subordinate officials or bodies. With respect to proceedings covered under § 1.183(a)(1)(ii) of this part, the Board of Contract Appeals is authorized by statute (41 U.S.C. 607) to take final action.

Information Required From Applicants

§ 1.190 Contents of application.

(a) An application for an award of fees and expenses under EAJA shall identify the applicant and the proceeding for which an award is sought. Unless the applicant is an individual, the application shall state the number of employees of the applicant and describe briefly the type and purpose of its organization or business. The application shall also:

(1) Show that the applicant has prevailed and identify the position of the Department that the applicant alleges was not substantially justified and shall briefly state the basis for such allegation; or

(2) Show that the demand by the Department in the proceeding was substantially in excess of, and was unreasonable when compared with, the decision in the proceeding.

(b) The application also shall, as appropriate, include a declaration that the applicant is a small entity as defined in 5 U.S.C. 601 or a statement that the applicant's net worth does not exceed $2 million (if an individual) or $7 million (for all other applicants, including their affiliates). However, an applicant may omit this statement if:

(1) It attaches a copy of a ruling by the Internal Revenue Service that it qualifies as an organization described in section 501(c)(3) of the Internal Revenue Code (26 U.S.C. 501(c)(3)) or, in the case of a tax-exempt organization not required to obtain a ruling from the Internal Revenue Service on its exempt status, a statement that describes the basis for the applicant's belief that it qualifies under such section; or

(2) It states that it is a cooperative association as defined in section 15(a) of the Agricultural Marketing Act (12 U.S.C. 114j(a)).

(c) The application shall state the amount of fees and expenses for which an award is sought.

(d) The application also may include any other matters that the applicant wishes the Department to consider in determining whether, and in what amount, an award should be made.

(e) The application shall be signed by the applicant or an authorized officer or attorney of the applicant. It also shall contain or be accompanied by a written verification under oath or affirmation under penalty of perjury that the information provided in the application and all accompanying material is true and complete to the best of the signer's information and belief.

§ 1.191 Net worth exhibit.

(a) An applicant, except a qualified tax-exempt organization or cooperative association, must provide with its application a detailed exhibit showing the net worth of the applicant and any affiliates (as defined in § 1.184 of this part) when the proceeding was initiated. The exhibit may be in any form convenient to the applicant that provides full disclosure of the applicant's and its affiliates' assets and liabilities and is sufficient to determine whether the applicant qualifies under the standards in this subpart. The adjudicative officer may require an applicant to file additional information to determine its eligibility for an award.

(b) Ordinarily, the net worth exhibit will be included in the public record of the proceeding. However, an applicant that objects to public disclosure of information in any portion of the exhibit and believes there are legal grounds for withholding it from disclosure may submit that portion of the exhibit directly to the adjudicative officer in a sealed envelope labeled ''Confidential Financial Information,'' accompanied by a motion to withhold the information from public disclosure. The motion shall describe the information sought to be withheld and explain, in detail, why it falls within one or more of the specific exemptions from mandatory disclosure under the Freedom of Information Act, 5 U.S.C. 552(b) (1) through (9). The material in question shall be served on counsel representing the agency against which the applicant seeks an award, but need not be served on any other party to the proceeding. If the adjudicative officer finds that the information should not be withheld from disclosure, it shall be placed in the public record of the proceeding. Otherwise, any request to inspect or copy the exhibit shall be disposed of in accordance with the established procedures of the Department under the Freedom of Information Act (§§ 1.1 through 1.23 of this part).

§ 1.192 Documentation of fees and expenses.

(a) The application shall be accompanied by full documentation of the fees and expenses, including the cost of any study, analysis, engineering report, test, project, or similar matter, for which an award is sought.

(b) The documentation shall include an affidavit from any attorney, agent, or expert witness representing or appearing on behalf of the party, stating the actual time expended and the rate at which fees and other expenses were computed and describing the specific services performed.

(1) The affidavit shall state the services performed. In order to establish the hourly rate, the affidavit shall state the hourly rate which is billed and paid by the majority of clients during the relevant time periods.

(2) If no hourly rate is paid by the majority of clients because, for instance, the attorney or agent represents most clients on a contingency basis, the attorney or agent shall provide information about two attorneys or agents with similar experience, who

perform similar work, stating their hourly rate.

(c) The documentation also shall include a description of any expenses for which reimbursement is sought and a statement of the amounts paid and payable by the applicant or by any other person or entity for the services provided.

(d) The adjudicative officer may require the applicant to provide vouchers, receipts, or other substantiation for any fees or expenses claimed, pursuant to § 1.199 of this part.

§ 1.193 Time for filing application.

(a) An application may be filed whenever the applicant has prevailed in the proceeding or in a significant and discrete substantive portion of the proceeding, but in no case later than 30 days after final disposition of the proceeding by the Department.

(b) For the purposes of this subpart, final disposition means the date on which a decision or order disposing of the merits of the proceeding or any other complete resolution of the proceeding, such as a settlement or voluntary dismissal, become final and unappealable, both within the Department and to the courts.

(c) If review or reconsideration is sought or taken of a decision as to which an applicant believes it has prevailed, proceedings for the award of fees shall be stayed pending final disposition of the underlying controversy. When the United States appeals the underlying merits of an adversary adjudication to a court, no decision on an application for fees and other expenses in connection with that adversary adjudication shall be made until a final and unreviewable decision is rendered by the court on the appeal or until the underlying merits of the case have been finally determined pursuant to the appeal.

Procedures for Considering Applications

§ 1.194 Filing and service of documents.

Any application for an award or other pleading or document related to an application shall be filed and served on all parties to the proceeding in the same manner as other pleadings in the proceeding except as provided in § 1.191 of this part for confidential financial information. The provisions relating to filing, service, extensions of time, and computation of time contained in § 1.147 of this part are incorporated into and made applicable to this subpart, except that the statutory 30 day time limit on filing the application as set out in § 1.193 of this part may not be extended.

§ 1.195 Answer to application.

(a) Within 30 days after service of an application, agency counsel may file an answer. If agency counsel fails to timely answer or settle the application, the adjudicative officer, upon a satisfactory showing of entitlement by the applicant, may make an award for the applicant's allowable fees and expenses.

(b) If agency counsel and the applicant believe that the issues in the fee application can be settled, they may jointly file a statement of intent to negotiate a settlement. The filing of this statement shall extend the time for filing an answer for an additional 30 days, and further extensions may be granted by the adjudicative officer upon request by agency counsel and the applicant.

(c) The answer shall explain in detail any objections to the award requested and identify the facts relied on in support of agency counsel's position. If the answer is based on any alleged facts not already in the record of the proceeding, agency counsel shall include with the answer either supporting affidavits or a request for further proceedings under § 1.199 of this part.

§ 1.196 Reply.

Within 15 days after service of an answer, the applicant may file a reply. If the reply is based on any alleged facts not already in the record of the proceeding, the applicant shall include with the reply either supporting affidavits or a request for further proceedings under § 1.199 of this part.

§ 1.197 Comments by other parties.

Any party to a proceeding other than the applicant and agency counsel may file comments on an application within 30 days after it is served or on an answer within 15 days after it is served. A commenting party may not participate further in proceedings on the application, unless the adjudicative officer determines that the public interest requires such participation in order to permit full exploration of matters raised in the comments.

§ 1.198 Settlement.

The applicant and agency counsel may agree on a proposed settlement of the award before final action on the application, either in connection with a settlement of the underlying proceeding, or after the underlying proceeding has been concluded. If a prevailing party and agency counsel agree on a proposed settlement of an award before an application has been filed, the application shall be filed with the proposed settlement.

§ 1.199 Further proceedings.

(a) Ordinarily, the determination of an award will be made on the basis of the written record. However, on request of either the applicant or agency counsel, or on his or her own initiative, the adjudicative officer may order further proceedings, such as an informal conference, oral argument, additional written submissions or, as to issues other than substantial justification (such as the applicant's eligibility or substantiation of fees and expenses), pertinent discovery or an evidentiary hearing. Such further proceedings shall be held only when necessary for full and fair resolution of the issues arising from the application, and shall be conducted as promptly as possible. Whether the position of the Department was substantially justified shall be determined on the basis of the administrative record, as a whole, which is made in the adversary adjudication for which fees and other expenses are sought.

(b) A request that the adjudicative officer order further proceedings under this section shall identify specifically the information sought or the disputed issues, and shall explain specifically why the additional proceedings are necessary to resolve the issues.

(c) In the event that an evidentiary hearing is held, it shall be conducted pursuant to §§ 1.130 through 1.151 of this part, except that any hearing in a proceeding covered by § 1.183(a)(1)(ii) of this part shall be conducted pursuant to Rules 17 through 25 of the Board of Contract Appeals contained in § 24.21 of this title.

§ 1.200 Decision.

The adjudicative officer or Board of Contract Appeals shall issue an initial decision on the application as expeditiously as possible after completion of proceedings on the application. Whenever possible, the decision shall be made by the same administrative judge or panel that decided the contract appeal for which fees are sought. The decision shall include written findings and conclusions on the applicant's eligibility and status as a prevailing party, and an explanation of the reasons for any difference between the amount requested and the amount awarded. This decision also shall include, if at issue, findings on whether the position of the Department was substantially justified, whether the applicant unduly protracted the proceedings, or whether special circumstances make an award unjust. If the applicant has sought an award against more than one agency, the decision shall allocate responsibility for

payment of any award made among the agencies, and shall explain the reasons for the allocation made.

§ 1.201 Department review.

(a) Except with respect to a proceeding covered by § 1.183(a)(1)(ii) of this part either the applicant or agency counsel may seek review of the initial decision on the fee application, in accordance with the provisions of §§ 1.145(a) and 1.146(a) of this part or in accordance with any delegation made pursuant to § 1.189 of this part. If neither the applicant nor agency counsel seeks review, the initial decision on the fee application shall become a final decision of the Department 35 days after it is served upon the applicant. If review is taken, it will be in accord with the provisions of §§ 1.145(b) through (i) and 1.146(b) of this part, or

(b) With respect to a proceeding covered by § 1.183(a)(1)(ii) of this part, either party may seek reconsideration of the decision on the fee application in accordance with Rule 29 of the Board of Contract Appeals contained in § 24.21 of this title. In addition, either party may appeal a decision of the Board of Contract Appeals to the Court of Appeals for the Federal Circuit in accordance with 41 U.S.C. 607.

§ 1.202 Judicial review.

Judicial review of final agency decisions on awards may be sought as provided in 5 U.S.C. 504(c)(2).

§ 1.203 Payment of award.

An applicant seeking payment of an award shall submit to the head of the agency administering the statute involved in the proceeding a copy of the final decision of the Department granting the award, accompanied by a statement that the applicant will not seek review of the decision in the United States courts. The agency will pay the amount awarded to the applicant within 60 days, unless judicial review of the award or of the underlying decision of the adversary adjudication has been sought by the applicant or any other party to the proceeding.

Dated: February 25, 2002.

Ann M. Veneman,

Secretary of Agriculture.

[FR Doc. 02–6516 Filed 3–19–02; 8:45 am]

BILLING CODE 3410–14–P

DEPARTMENT OF TRANSPORTATION

Federal Aviation Administration

14 CFR Part 25

[Docket No. NM211; Notice No. 25–02–03–SC]

Special Conditions: Airbus Industrie, Model A340–500/–600 Airplanes; Ground Loads and Conditions for Center Landing Gear With Four Wheels and Braking Capability

AGENCY: Federal Aviation Administration (FAA), DOT.

ACTION: Notice of proposed special conditions.

SUMMARY: This action proposes special conditions for Airbus Industrie Model A340–500 and –600 airplanes. These airplanes will have a novel or unusual design feature when compared to the state of technology envisioned in the airworthiness standards for transport category airplanes. This design feature is associated with the landing gear, in the form of a four-wheeled center landing gear, installed under the fuselage, which functions like a main landing gear in all respects, including the ability to brake. The applicable airworthiness regulations do not contain adequate or appropriate safety standards for this design feature. These proposed special conditions contain the additional safety standards that the Administrator considers necessary to establish a level of safety equivalent to that established by the existing airworthiness standards.

DATES: Comments must be received on or before April 19, 2002.

ADDRESSES: Comments on this proposal may be mailed in duplicate to: Federal Aviation Administration, Transport Airplane Directorate, Attn: Rules Docket (ANM–113), Docket No. NM211, 1601 Lind Avenue SW., Renton, Washington, 98055–4056; or delivered in duplicate to the Transport Airplane Directorate at the above address. Comments must be marked: Docket No. NM211. Comments may be inspected in the Rules Docket weekdays, except Federal holidays, between 7:30 a.m. and 4 p.m.

FOR FURTHER INFORMATION CONTACT: Tim Backman, FAA, ANM–116, Transport Airplane Directorate, Aircraft Certification Service, 1601 Lind Avenue SW., Renton, Washington, 98055–4056; telephone (425) 227–2797; facsimile (425) 227–1149.

SUPPLEMENTARY INFORMATION:

Comments Invited

The FAA invites interested persons to participate in this rulemaking by submitting written comments, data, or views. The most helpful comments reference a specific portion of the proposal, explain the reason for any recommended change, and include supporting data. We ask that you send us two copies of written comments.

We will file in the docket all comments we receive, as well as a report summarizing each substantive public contact with FAA personnel concerning these proposed special conditions. The docket is available for public inspection before and after the comment closing date. If you wish to review the docket in person, go to the address in the **ADDRESSES** section of this preamble between 7:30 a.m. and 4 p.m., Monday through Friday, except Federal holidays.

We will consider all comments we receive on or before the closing date for comments. We will consider comments filed late if it is possible to do so without incurring expense or delay. We may change this proposal for special conditions in light of the comments we receive.

If you want the FAA to acknowledge receipt of your comments on this proposal, include with your comments a pre-addressed, stamped postcard on which the docket number appears. We will stamp the date on the postcard and mail it back to you.

Background

On November 14, 1996, Airbus Industrie applied for an amendment to U.S. type certificate (TC) A43NM to include the new models A340–500 and –600. These models are derivatives of the A340–300, which is approved under the same TC.

The Model A340–500 fuselage is a 6-frame stretch of the Model A340–300 and is powered by 4 Rolls Royce Trent 553 engines, each rated at 53,000 pounds of thrust. The airplane has interior seating arrangements for up to 375 passengers, with a maximum takeoff weight (MTOW) of 820,000 pounds. The Model 340–500 is intended for long-range operations and has additional fuel capacity over that of the model A340–600.

The Model A340–600 fuselage is a 20-frame stretch of the Model A340–300 and is powered by 4 Rolls Royce Trent 556 engines, each rated at 56,000 pounds of thrust. The airplane has interior seating arrangements for up to 440 passengers, with a MTOW of 804,500 pounds.

Type Certification Basis

Under the provisions of 14 CFR 21.101, Airbus Industrie must show that the Model A340–500 and –600 airplanes

meet the applicable provisions of the regulations incorporated by reference in TC A43NM or the applicable regulations in effect on the date of application for the change to the type certificate. The regulations incorporated by reference in the type certificate are commonly referred to as the ''original type certification basis.'' The regulations incorporated by reference in TC A43NM are 14 CFR part 25, effective February 1, 1965, including Amendments 25–1 through 25–63, and Amendments 25–64, 25–65, 25–66, and 25–77, with certain exceptions that are not relevant to these proposed special conditions.

In addition, if the regulations incorporated by reference do not provide adequate standards with respect to the change, the applicant must comply with certain regulations in effect on the date of application for the change. The FAA has determined that the Model A340–500 and –600 airplanes must be shown to comply with Amendments 25–1 through 25–91 to part 25, with certain FAA-allowed reversions for specific part 25 regulations to the part 25 amendment levels of the original type certification basis.

Airbus has also chosen to comply with part 25 as amended by Amendments 25–92, –93, –94, –95, –97, –98, and –104.

If the Administrator finds that the applicable airworthiness regulations (i.e., part 25 as amended) do not contain adequate or appropriate safety standards for the Airbus Industrie Model A340–500 and –600 because of a novel or unusual design feature, special conditions are prescribed under the provisions of 14 CFR 21.16.

In addition to the applicable airworthiness regulations and special conditions, the Airbus Industrie Model A340–500 and –600 must comply with the fuel vent and exhaust emission requirements of 14 CFR part 34 and the noise certification requirements of 14 CFR part 36.

Special conditions, as defined in 14 CFR 11.19, are issued in accordance with § 11.38 and become part of the type certification basis in accordance with § 21.101(b)(2).

Special conditions are initially applicable to the model for which they are issued. Should the type certificate for that model be amended later to include any other model that incorporates the same novel or unusual design feature, or should any other model already included on the same type certificate be modified to incorporate the same novel or unusual design feature, the special conditions would also apply to the other model under the provisions of § 21.101(a)(1).

Novel or Unusual Design Features

The Airbus Models A340–500 and –600 will incorporate the following novel or unusual design feature: a four-wheel center landing gear with braking ability.

Discussion

The basic A340 included a two-wheel center landing gear which did not have brakes. The purpose of the center landing gear was to assist the main landing gear during ground handling conditions for heavy airplane weights. This center landing gear was not intended for energy absorption during landing, even if it could participate in the impact under certain conditions. Therefore, to provide additional taxi, takeoff, and landing criteria for this arrangement, Special Conditions 25–ANM–69 was issued.

The Model A340–500 and –600 airplanes have a four-wheel center landing gear which functions in all respects like a main landing gear, including braking capabilities. Because the speeds and weights of the Models A340–500 and –600 are greater than that of the basic A340, redesign of the center landing gear was necessary. As a result, the current rules, applying to the original two-wheel center landing gear, are inadequate.

Applicability

As discussed above, these special conditions are applicable to the Airbus Models A340–500 and –600. Should Airbus Industries apply at a later date for a change to the type certificate to include another model incorporating the same novel or unusual design feature, the special conditions would apply to that model as well under the provisions of § 21.101(a)(1).

Conclusion

This action affects only certain novel or unusual design features of the center landing gear on the Model A340–500 and A340–600 airplanes. It is not a rule of general applicability, and it affects only the applicant who applied to the FAA for approval of these features on the airplane.

List of Subjects in 14 CFR Part 25

Aircraft, Aviation safety, Reporting and recordkeeping requirements.

The authority citation for these special conditions is as follows:

Authority: 49 U.S.C. 106(g), 40113, 44701, 44702, 44704.

The Proposed Special Conditions

Accordingly, the Federal Aviation Administration (FAA) proposes the following special conditions as part of the type certification basis for Airbus Model A340–500 and A340–600 airplanes.

The following special conditions are proposed in lieu of the previously issued special conditions, ''Ground Load Conditions for Center Landing Gear,'' recorded as item 10 of Special Conditions: Airbus Industrie Model A340 Series Airplanes [Docket No. NM–75, Special Conditions No. 25–ANM–69]:

1. *Ground Load Conditions for Center Landing Gear.* Notwithstanding § 25.477, the requirements of § 25.473 and §§ 25.479 through 25.485 apply, except as noted:

(a) In addition to the requirements of § 25.473, ''Landing load conditions and assumptions,'' and § 25.479, ''Level landing conditions,'' landing should be considered on a level runway and on a runway having a convex upward shape that may be approximated by a slope of 1.5 percent at main landing gear stations. The maximum loads determined from these two conditions must be applied to each main landing gear and to the center landing gear.

(b) In addition to the requirements of § 25.483, ''One gear landing conditions,'' the condition represented by Figure 1 also applies:

BILLING CODE 4910–13–P

Figure 1. Center gear landing Condition

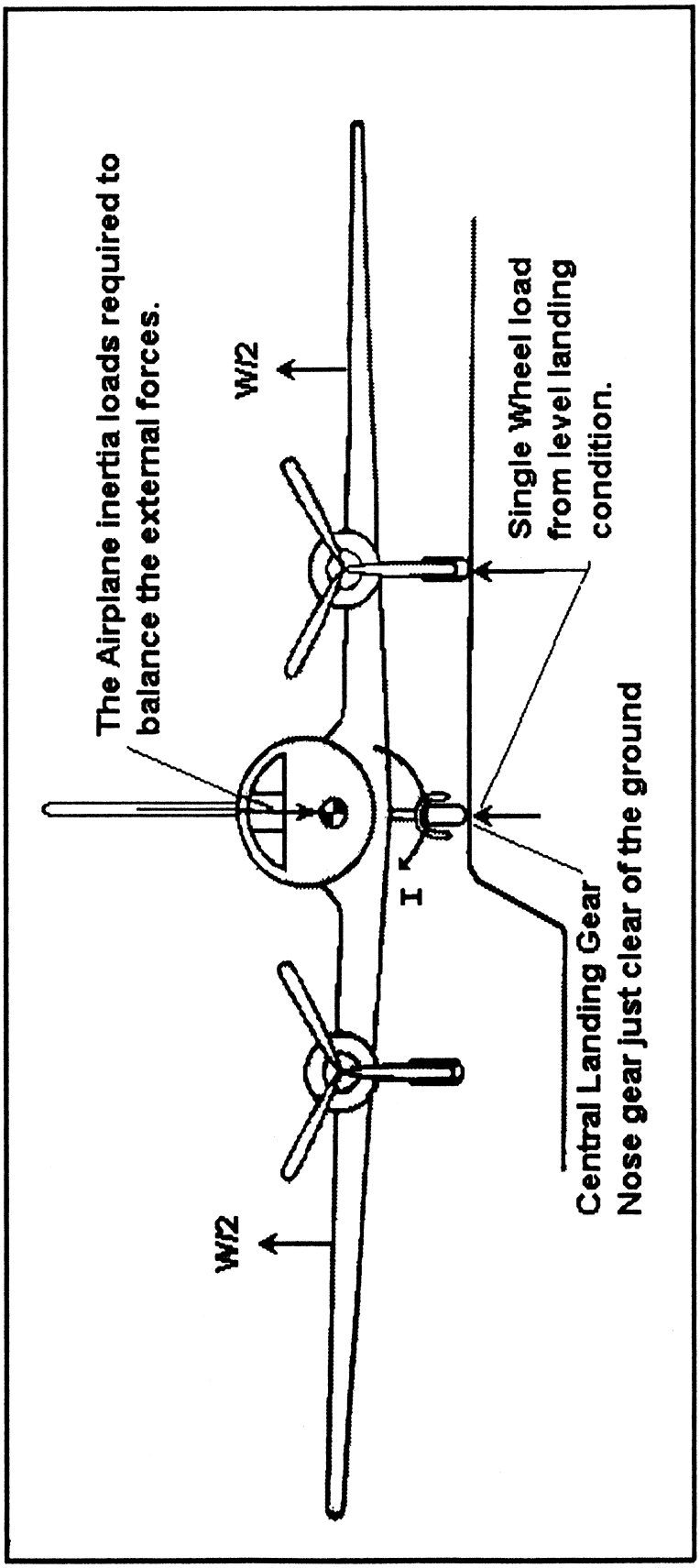

BILLING CODE 4910–13–P

(c) In lieu of the requirements of § 25.485, ''Side load conditions,'' the following apply:

(1) The airplane is considered to be in the level attitude with only the main and center wheels contacting the ground.

(2) Vertical reactions of one-half of the maximum vertical reaction obtained at each main and center gear in the level landing conditions should be considered. The vertical loads must be combined with side loads as follows: for the main gear, 0.8 of the vertical reaction (on one side) acting inward and 0.6 of the vertical reaction (on the other side) acting outward; for the center gear, 0.7 of the vertical reaction acting in the same direction as main gear side loads. These loads are assumed to be applied at the ground contact point and to be resisted by the inertia of the airplane. The drag loads may be assumed to be zero.

(d) In addition to § 25.489, ''Ground handling conditions,'' the airplane should be considered to be on a level runway and on a runway having a convex upward shape that may be approximated by a slope of 1.5 percent at main landing gear stations. The ground reactions must be distributed to the individual landing gear units in a rational or conservative manner.

(e) In addition to the requirements of § 25.493(d), ''Braked roll conditions,'' the sudden application of maximum braking effort must be defined taking into account the behavior of the braking system. Failure conditions of the braking system not shown to be extremely improbable must be analyzed in accordance with the following criteria:

(1) At the time of occurrence. A realistic scenario, including pilot corrective actions, must be established to determine the loads occurring at the time of failure and immediately after failure.

(i) For static strength substantiation, these loads multiplied by an appropriate factor of safety that is related to the probability of occurrence of the failure are ultimate loads to be considered for design. The factor of safety (F.S.) is defined in Figure 2.

Figure 2

Factor of safety at the time of occurrence

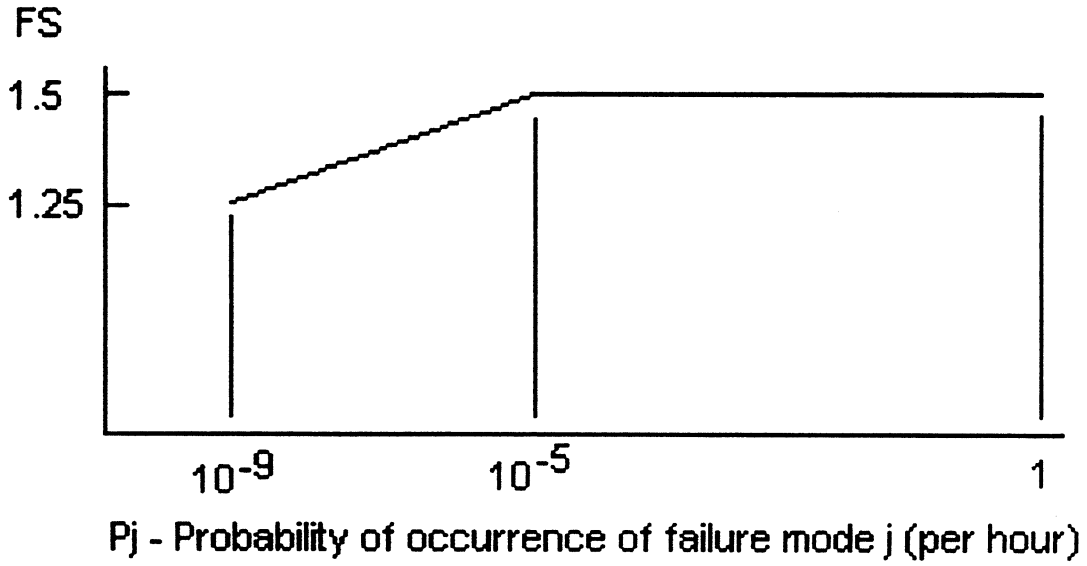

(ii) For residual strength substantiation, the airplane must be able to withstand two thirds of the ultimate loads defined in paragraph (e)(1)(i).

(iii) Failures of the system that result in forced structural vibrations (oscillatory failures) must not produce loads that could result in detrimental deformation of primary structure.

(2) Consideration of certain failure conditions may be required by other sections of part 25, regardless of calculated system reliability. Where analysis shows the probability of these failure conditions to be less than 10^{-9}, criteria other than those specified in this paragraph may be used for structural substantiation to show continued safe flight and landing.

(3) Warning considerations. For system failure detection and warning, the system must be checked for failure conditions, not extremely improbable, that degrade the structural capability below the level required by part 25 or significantly reduce the reliability of the remaining system. The flightcrew must be made aware of these failures before flight. Certain elements of the control system, such as mechanical and hydraulic components, may use special periodic inspections, and electronic components may use daily checks, in lieu of warning systems to achieve the objective of this requirement. These certification maintenance requirements must be limited to components that are not readily detectable by normal warning systems and where service history shows that inspections will provide an adequate level of safety.

(4) Dispatch with known failure conditions. If the airplane is to be dispatched in a known system failure condition that affects structural

performance, or affects the reliability of the remaining system to maintain structural performance, then the provisions of these special conditions must be met for the dispatched condition and for subsequent failures. Flight limitations and expected operational limitations may be taken into account in establishing Qj as the combined probability of being in the dispatched failure condition and the subsequent failure condition for the safety margins in Figure 3. These limitations must be such that the probability of being in this combined failure state and then subsequently encountering limit load conditions is extremely improbable. No reduction in these safety margins is allowed if the subsequent system failure rate is greater than 10^{-3} per hour.''

Figure 3

Factor of safety for continuation of flight

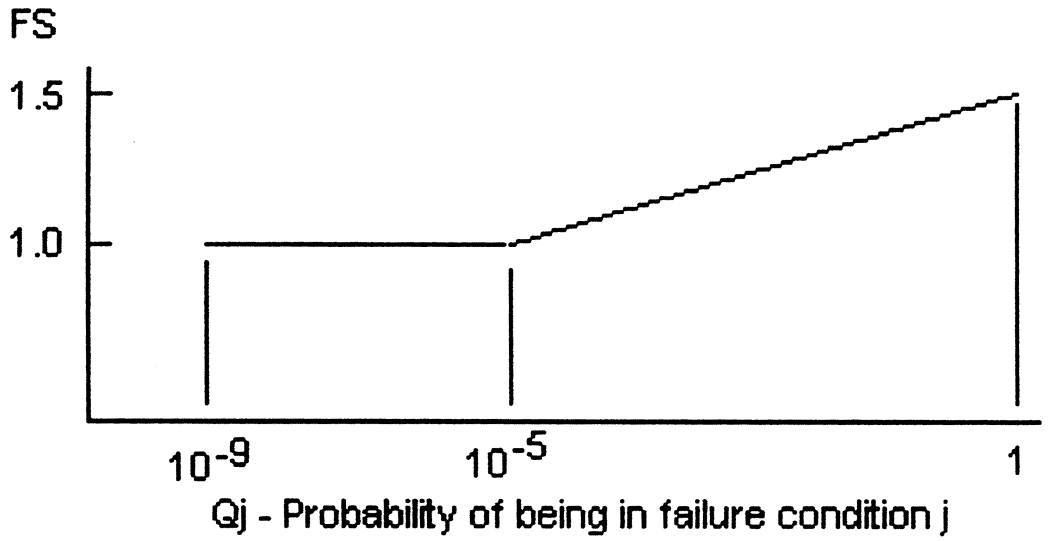

$Q_j = (T_j)(P_j)$ where:

T_j = Average time spent in failure condition j (in hours).

P_j = Probability of occurrence of failure mode j (per hour).

(f) In lieu of the requirements of § 25.495, ''Turning,'' the following apply:

(1) The airplane is assumed to execute a steady turn by nose gear steering, or by application of sufficient differential power, so that the limit load factors applied at the center of gravity are 1.0 vertically and 0.5 laterally.

(2) The airplane must be designed for the condition prescribed in paragraph (f)(1), taking into account:

(i) The effects of tire characteristics on the sharing of lateral loads on each tire of the landing gear system, and

(ii) The effect of airframe and landing gear flexibility on the sharing of loads on the different legs of the landing gear system.

(g) In lieu of the requirements of § 25.503, ''Pivoting,'' the following apply:

(1) The main and center gear units and supporting structure must be designed for the scrubbing or torsion loads, or both, induced by pivoting during ground maneuvers produced by:

(i) Towing at the nose gear, no brakes applied, and

(ii) Application of symmetrical or unsymmetrical forward thrust to aid pivoting and with or without braking by pilot action on the pedals.

(2) The airplane is assumed to be in static equilibrium, with the loads being applied at the ground contact points.

(3) The limit vertical load factor must be 1.0, and:

(i) For wheels with locked brakes applied by pilot action on the pedals, the coefficient of friction must be 0.8.

(ii) For wheels with brakes not applied, the ground tire reactions must be based on reliable tire data.

(4) The failure conditions must be analyzed in accordance with paragraph (e) of these Special Conditions.

(h) In lieu of paragraph (b) of § 25.723 ''Shock absorption tests,'' the center landing gear should not fail in a test demonstrating its reserve energy absorption capacity at design landing weight, assuming airplane lift no greater than the airplane weight acting during a 12-feet-per-second airplane landing impact, taking into account both main and center gear acting during the impact. Landing should be considered on a level runway or a runway having a convex upward shape that may be approximated by a slope of 1.5 percent with the horizontal at main landing gear stations, whichever is the most critical.

Issued in Renton, Washington, on February 28, 2002.

Vi L. Lipski,

Manager, Transport Airplane Directorate, Aircraft Certification Service.

[FR Doc. 02–5876 Filed 3–19–02; 8:45 am]

BILLING CODE 4910–13–P

DEPARTMENT OF TRANSPORTATION

Federal Aviation Administration

14 CFR Part 39

[Docket No. 2000–NM–307–AD]

RIN 2120–AA64

Airworthiness Directives; Bombardier Model DHC–8–100, –200, and –300 Series Airplanes

AGENCY: Federal Aviation Administration, DOT.

ACTION: Notice of proposed rulemaking (NPRM).

SUMMARY: This document proposes the adoption of a new airworthiness directive (AD) that is applicable to certain Bombardier Model DHC–8–100, –200, and –300 series airplanes. This proposal would require various modifications of the airstair (main passenger) door. This action is necessary to prevent failure of the airstair door to open after a landing, which could result in a blocked escape route during an emergency evacuation. This action is intended to address the identified unsafe condition.

DATES: Comments must be received by April 19, 2002.

ADDRESSES: Submit comments in triplicate to the Federal Aviation Administration (FAA), Transport Airplane Directorate, ANM–114, Attention: Rules Docket No. 2000–NM–307–AD, 1601 Lind Avenue, SW., Renton, Washington 98055–4056. Comments may be inspected at this location between 9:00 a.m. and 3:00 p.m., Monday through Friday, except Federal holidays. Comments may be submitted via fax to (425) 227–1232. Comments may also be sent via the Internet using the following address: *9-anm-nprmcomment@faa.gov.* Comments sent via fax or the Internet must contain ''Docket No. 2000–NM–307–AD'' in the subject line and need not be submitted in triplicate. Comments sent via the Internet as attached electronic files must be formatted in Microsoft Word 97 for Windows or ASCII text.

The service information referenced in the proposed rule may be obtained from Bombardier, Inc., Bombardier Regional Aircraft Division, 123 Garratt Boulevard, Downsview, Ontario M3K 1Y5, Canada. This information may be examined at the FAA, Transport Airplane Directorate, 1601 Lind Avenue, SW., Renton, Washington; or at the FAA, New York Aircraft Certification Office, 10 Fifth Street, Third Floor, Valley Stream, New York.

FOR FURTHER INFORMATION CONTACT: Dan Parrillo, Aerospace Engineer, Systems and Flight Test Branch, ANE–172, FAA, New York Aircraft Certification Office, 10 Fifth Street, Third Floor, Valley Stream, New York 11581; telephone (516) 256–7505; fax (516) 568–2716.

SUPPLEMENTARY INFORMATION:

Comments Invited

Interested persons are invited to participate in the making of the proposed rule by submitting such written data, views, or arguments as they may desire. Communications shall identify the Rules Docket number and be submitted in triplicate to the address specified above. All communications received on or before the closing date for comments, specified above, will be considered before taking action on the proposed rule. The proposals contained in this action may be changed in light of the comments received.

Submit comments using the following format:

- Organize comments issue-by-issue. For example, discuss a request to change the compliance time and a request to change the service bulletin reference as two separate issues.
- For each issue, state what specific change to the proposed AD is being requested.
- Include justification (*e.g.,* reasons or data) for each request.

Comments are specifically invited on the overall regulatory, economic, environmental, and energy aspects of the proposed rule. All comments submitted will be available, both before and after the closing date for comments, in the Rules Docket for examination by interested persons. A report summarizing each FAA-public contact concerned with the substance of this proposal will be filed in the Rules Docket.

Commenters wishing the FAA to acknowledge receipt of their comments submitted in response to this action must submit a self-addressed, stamped postcard on which the following statement is made: ''Comments to Docket 2000–NM–307–AD.'' The postcard will be date-stamped and returned to the commenter.

Availability of NPRMs

Any person may obtain a copy of this NPRM by submitting a request to the FAA, Transport Airplane Directorate, ANM–114, Attention: Rules Docket 2000–NM–307–AD, 1601 Lind Avenue, SW., Renton, Washington 98055–4056.

Discussion

Transport Canada Civil Aviation (TCCA), which is the airworthiness authority for Canada, notified the FAA that an unsafe condition may exist on certain Bombardier Model DHC–8–100, –200, and –300 series airplanes. TCCA has received numerous reports of malfunctioning airstair (main passenger) doors on affected airplanes. During these malfunctions, crewmembers had difficulty opening or closing the door, or were completely unable to open the door from inside or outside. The airstair door is a ''Type I'' exit, which is essential for evacuation during an emergency. Causes of a failed airstair door include a malfunctioning inflation valve used for the door seal, bending of the gas springs (gas struts), and jamming and/or breaking of the door balance cable. Failure of the airstair door to open after a landing, if not corrected, could result in a blocked escape route during an emergency evacuation.

Explanation of Relevant Service Information

Bombardier has issued the service bulletins described in the following table:

Procedures for—	Are described in Service Bulletin—	Revision level—	Dated—
Replacing the inflation valve with a new valve of an improved design..	8–52–46	Original	September 30, 1998.
Reworking the airstair door cable balance assembly	8–52–38	Original	October 10, 1995.
		'A'	September 19, 1997.
Modifying the cable guard system by replacing the upper cable guards with new, improved cable guards.	8–52–57	Original	February 23, 2000.
		'A'	July 28, 2000.
		'B'	November 14, 2000.

Procedures for—	Are described in Service Bulletin—	Revision level—	Dated—
Modifying the airstair balance system by manufacturing and installing a support bracket assembly.	8–52–56	'C'	March 10, 2000.
		'D'	May 18, 2000.
		'E'	July 20, 2000.
		'F'	August 29, 2000.
		'G'	November 7, 2000.
Replacing the airstair door gas springs with new gas springs.	8–52–59	Original	September 18, 2000.
		'A'	January 3, 2001.

Accomplishment of the actions specified in the service bulletins is intended to adequately address the identified unsafe condition. TCCA classified Service Bulletins 8–52–46, 8–52–38, and 8–52–57 as mandatory; mandated accomplishment of either Service Bulletin 8–52–56 or 8–52–59 (and allowed accomplishment of both); and issued Canadian airworthiness directive CF–2000–19R1, dated January 22, 2001, to ensure the continued airworthiness of these airplanes in Canada.

FAA's Conclusions

These airplane models are manufactured in Canada and are type certificated for operation in the United States under the provisions of section 21.29 of the Federal Aviation Regulations (14 CFR 21.29) and the applicable bilateral airworthiness agreement. Pursuant to this bilateral airworthiness agreement, TCCA has kept the FAA informed of the situation described above. The FAA has examined the findings of TCCA, reviewed all available information, and determined that AD action is necessary for products of this type design that are certificated for operation in the United States.

Explanation of Requirements of Proposed Rule

Since an unsafe condition has been identified that is likely to exist or develop on other airplanes of the same type design registered in the United States, the proposed AD would require accomplishment of the actions specified in the service bulletins described previously.

Cost Impact

The FAA provides the following cost estimates for the actions specified by this proposed AD:

Action per Service Bulletin	Workhours per airplane	Labor rate per hour	Parts cost per airplane	Number of U.S. airplanes affected	Per-airplane cost	Fleet cost
8–52–46	3	$60	$297	194	$477	$92,538
8–52–38	4	60	1,930	130	2,170	282,100
8–52–57	1	60	0	194	60	11,640
8–52–56	4	60	0	194	240	46,560
8–52–59	3	60	0	194	180	34,920

The cost impact figures discussed above are based on assumptions that no operator has yet accomplished any of the proposed requirements of this AD action, and that no operator would accomplish those actions in the future if this proposed AD were not adopted. The cost impact figures discussed in AD rulemaking actions represent only the time necessary to perform the specific actions actually required by the AD. These figures typically do not include incidental costs, such as the time required to gain access and close up, planning time, or time necessitated by other administrative actions.

Regulatory Impact

The regulations proposed herein would not have a substantial direct effect on the States, on the relationship between the national Government and the States, or on the distribution of power and responsibilities among the various levels of government. Therefore, it is determined that this proposal would not have federalism implications under Executive Order 13132.

For the reasons discussed above, I certify that this proposed regulation (1) is not a ''significant regulatory action'' under Executive Order 12866; (2) is not a ''significant rule'' under the DOT Regulatory Policies and Procedures (44 FR 11034, February 26, 1979); and (3) if promulgated, will not have a significant economic impact, positive or negative, on a substantial number of small entities under the criteria of the Regulatory Flexibility Act. A copy of the draft regulatory evaluation prepared for this action is contained in the Rules Docket. A copy of it may be obtained by contacting the Rules Docket at the location provided under the caption **ADDRESSES**.

List of Subjects in 14 CFR Part 39

Air transportation, Aircraft, Aviation safety, Safety.

The Proposed Amendment

Accordingly, pursuant to the authority delegated to me by the Administrator, the Federal Aviation Administration proposes to amend part 39 of the Federal Aviation Regulations (14 CFR part 39) as follows:

PART 39—AIRWORTHINESS DIRECTIVES

1. The authority citation for part 39 continues to read as follows:

Authority: 49 U.S.C. 106(g), 40113, 44701.

§ 39.13 [Amended]

2. Section 39.13 is amended by adding the following new airworthiness directive:

Bombardier, Inc. (Formerly de Havilland, Inc.): Docket 2000–NM–307–AD.

Applicability: Model DHC–8–100, –200, and –300 series airplanes; certificated in any category; serial numbers 003 through 550 inclusive.

Note 1: This AD applies to each airplane identified in the preceding applicability provision, regardless of whether it has been

modified, altered, or repaired in the area subject to the requirements of this AD. For airplanes that have been modified, altered, or repaired so that the performance of the requirements of this AD is affected, the owner/operator must request approval for an alternative method of compliance in accordance with paragraph (b) of this AD. The request should include an assessment of the effect of the modification, alteration, or repair on the unsafe condition addressed by this AD; and, if the unsafe condition has not been eliminated, the request should include specific proposed actions to address it.

Compliance: Required as indicated, unless accomplished previously.

To prevent failure of the airstair door to open after a landing, which could result in a blocked escape route during an emergency evacuation, accomplish the following:

Modifications

(a) Modify the airplane as specified by the following table:

TABLE—MODIFICATION REQUIREMENTS

For Model—	Modify the airstair door by—	Within—	In accordance with the Accomplishment Instructions of Bombardier Service Bulletin—
(1) DHC–8–102, −103, −106, −201, 202, 301, −311, and −315 series airplanes; serial numbers 003 through 522 inclusive.	Replacing the inflation valve with a new valve of an improved design (Modsum 8Q100185).	6 months after the effective date of this AD.	8–52–46, dated September 30, 1998.
(2) DHC–8–102, −103, −106, −301, −311, and −315 series airplanes; serial numbers 003 through 400 inclusive.	Reworking the airstair door cable balance assembly (Modsum 8/2205).	6 months after the effective date of this AD.	8–52–38, dated October 10, 1995; or 8–52–38, Revision 'A,' dated September 19, 1997.
(3) DHC–8–102, −103, −106, −201, −202, −301, 311, and −315 series airplanes; serial numbers 003 through 550 inclusive.	Replacing the upper cable guards on the airstair door with new, improved cable guards (Modsum 8Q101093).	6 months after the effective date of this AD, but after the modification required by paragraph (a)(2) of this AD.	8–52–57, dated February 23, 2000; or 8–52–58, Revision 'A,' dated July 28, 2000; or 8–52–57, Revision 'B,' dated November 14, 2000.
(4) DHC–8–102, 103, 106, 201, 202, 301, 311, and 315 series airplanes; serial numbers 003 through 550 inclusive.	(i) Manufacturing and installing a support bracket assembly (Modsum 8Q101086); and/or.	6 months after the effective date of this AD.	8–52–56, Revision 'C,' dated March 10, 2000; or 8–52–56, Revision 'D,' dated May 18, 2000; or 8–52–56, Revision 'E,' dated July 20, 2000; or 8–52–56, Revision 'F,' dated August 29, 2000; or 8–52–56, Revision 'G,' dated November 7, 2000.
	(ii) Replacing the airstair door gas springs with new gas springs (Modsum 8Q101074).	6 months after the effective date of this AD.	8–52–59; dated September 18, 2000; or 8–52–59; Revision 'A,' dated January 3, 2001.

Note 2: Modsum 8Q101093 (paragraph (a)(3) of this AD) cannot be accomplished before Modification 8/2205 (paragraph (a)(2) of this AD), because Modsum 8Q101093 introduces a redesigned cable guard that replaces a cable guard that is part of Modification 8/2205.

Note 3: Modification as specified by either paragraph (a)(4)(i) or (a)(4)(ii)—or both—of this AD is acceptable for compliance with the requirements of paragraph (a)(4) of this AD.

Alternative Methods of Compliance

(b) An alternative method of compliance or adjustment of the compliance time that provides an acceptable level of safety may be used if approved by the Manager, New York Aircraft Certification Office (ACO), FAA. Operators shall submit their requests through an appropriate FAA Principal Maintenance Inspector, who may add comments and then send it to the Manager, New York ACO.

Note 4: Information concerning the existence of approved alternative methods of compliance with this AD, if any, may be obtained from the New York ACO.

Special Flight Permits

(c) Special flight permits may be issued in accordance with sections 21.197 and 21.199 of the Federal Aviation Regulations (14 CFR 21.197 and 21.199) to operate the airplane to a location where the requirements of this AD can be accomplished.

Note 5: The subject of this AD is addressed in Canadian airworthiness directive CF–2000–19R1, dated January 22, 2001.

Issued in Renton, Washington, on March 13, 2002.

Ali Bahrami,

Acting Manager, Transport Airplane Directorate, Aircraft Certification Service.

[FR Doc. 02–6630 Filed 3–19–02; 8:45 am]

BILLING CODE 4910–13–P

DEPARTMENT OF TRANSPORTATION

Federal Aviation Administration

14 CFR Part 39

[Docket No. 2000–CE–14–AD]

RIN 2120–AA64

Airworthiness Directives; Rockwell Collins, Inc. ADC–85, ADC–85A, ADC–850D, and ADC–850F Air Data Computers

AGENCY: Federal Aviation Administration, DOT.

ACTION: Supplemental notice of proposed rulemaking (NPRM); Reopening of the comment period.

SUMMARY: This document proposes to revise an earlier proposed airworthiness directive (AD) that would apply to certain Rockwell Collins, Inc. (Rockwell) ADC–85, ADC–85A, ADC–850C, and ADC–850F air data computers that are installed on airplanes. The earlier NPRM would have required you to replace any

affected air data computer (ADC) with one that has a reprogrammed and tested central processing unit (CPU) circuit card and circuit card assemblies. The earlier NPRM resulted from a flight test that showed that these ADCs could display an unwarranted ADC flag in response to the airplane's ''Normal/Alternate Air'' static source selection capability. Revised service information revealed the need to change the applicability of the affected ADC units that are installed on airplanes. In addition, evaluation of the public comments on the NPRM reveals the need to change the number and models of airplanes that could have the affected ADC units installed. Since these actions impose an additional burden over that proposed in the NPRM, we are reopening the comment period to allow the public the chance to comment on these additional actions.

DATES: The Federal Aviation Administration (FAA) must receive any comments on this proposed rule on or before May 17, 2002.

ADDRESSES: Submit comments to FAA, Central Region, Office of the Regional Counsel, Attention: Rules Docket No. 2000–CE–14–AD, 901 Locust, Room 506, Kansas City, Missouri 64106. You may view any comments at this location between 8 a.m. and 4 p.m., Monday through Friday, except Federal holidays. You may also send comments electronically to the following address: *9–ACE–7–Docket@faa.gov.* Comments sent electronically must contain ''Docket No. 2000–CE–76–AD'' in the subject line. If you send comments electronically as attached electronic files, the files must be formatted in Microsoft Word 97 for Windows or ASCII text.

You may get service information that applies to this proposed AD from Rockwell Collins, Business and Regional Systems, 400 Collins Road Northeast,Cedar Rapids, Iowa 52498; telephone: (319) 295–2512; facsimile: (319) 295–5064. You may also view this information at the Rules Docket at the address above.

FOR FURTHER INFORMATION CONTACT: Roger A. Souter, FAA, Wichita Aircraft Certification Office (ACO), 1801 Airport Road, Rm 100, Wichita, Kansas 67209; telephone: (316) 946–4134; facsimile: (316) 946–4407; e-mail address: *Roger.Souter@faa.gov.*

SUPPLEMENTARY INFORMATION:

Comments Invited

How Do I Comment on This Proposed AD?

The FAA invites comments on this proposed rule. You may submit whatever written data, views, or arguments you choose. You need to include the rule's docket number and submit your comments to the address specified under the caption **ADDRESSES.** We will consider all comments received on or before the closing date. We may amend this proposed rule in light of comments received. Factual information that supports your ideas and suggestions is extremely helpful in evaluating the effectiveness of this proposed AD action and determining whether we need to take additional rulemaking action.

Are There Any Specific Portions of This Proposed AD I Should Pay Attention to?

The FAA specifically invites comments on the overall regulatory, economic, environmental, and energy aspects of this proposed rule that might suggest a need to modify the rule. You may view all comments we receive before and after the closing date of the rule in the Rules Docket. We will file a report in the Rules Docket that summarizes each contact we have with the public that concerns the substantive parts of this proposed AD.

How Can I Be Sure FAA Receives My Comment?

If you want FAA to acknowledge the receipt of your mailed comments, you must include a self-addressed, stamped postcard. On the postcard, write ''Comments to Docket No. 2000–CE–14–AD.'' We will date stamp and mail the postcard back to you.

Discussion

What Events Have Caused This Proposed AD?

The air data computer (ADC), as part of its monitoring process, tests for errant sensor behavior such as unreasonable jumps in altitude and unreasonably high vertical speed. When the ADC detects an errant sensor behavior, the ADC displays a flag for 5.5 seconds plus the time it takes for the sensor to settle within the limits for another 5.5-second period. This results in a minimum ADC flag display of 11 seconds.

Testing of certain Rockwell Collins ADCs reveals the ADC could display unwarranted flags on aircraft where you can select the ''Normal/Alternate Air'' static source. When there is a significant difference between normal and alternate/revisionary static air sources, you can exceed the ADC monitor thresholds and the ADC would display flags.

If the flight crew used the undesirable ADC flag displays to deselect the alternate static air source before the initial 11-second display period, a valid air source may have been deselected. Confusion could result when the previously unflagged normal static air source is reselected. This may also result in the ADC displaying a flag for the first 11 seconds. The affected ADCs include:

Unit	Part No.	Applicable to serial No.
ADC–85 (Incorporating Rockwell Collins Service Bulletin No. 58)	622–8051–002 622–8051–003	All units.
ADC–85A (Incorporating Rockwell Collins Service Bulletin No. 58)	822–0370–113 822–0370–123 822–0370–139 822–0370–404 822–0370–408	All units.
ADC–850D (Incorporating Rockwell Collins Service Bulletin No. 58)	822–0389–133	All up to and including 3DGW (except for 1P6D, 22RC–22RF, and 23WK–3DGP).
ADC–850F	822–1036–406 822–1036–418	All Units.

What Are the Consequences If the Condition Is Not Corrected?

If these situations were to occur while the flight crew were making critical flight decisions, this unwarranted ADC flag could distract the crew, and the lack of attention to the critical actions could result in an unsafe operating condition.

Is There Service Information That Applies to This Subject?

Rockwell has issued Service Bulletin No. 62 (ADC–85/85A/850C/850D/850E/

850F–34–62), Revision 2, dated March 7, 2000, and Service Bulletin No. 62 (ADC–85/85A/850C/850F–34–62), dated October 25, 1999. Service Bulletin 62, Revision 2, reflects the addition of ADC–850D to the list of affected units and the removal of ADC–850C from the list of affected units.

What Are the Provisions of This Service Information?

These service bulletins contain procedures for replacing or reprogramming applicable parts or circuit card assemblies on central processing unit (CPU) circuit cards in the ADC and testing the modified ADC.

Has FAA Taken Any Action to This Point?

We issued a proposal to amend part 39 of the Federal Aviation Regulations (14 CFR part 39) to include an AD that would apply to certain Rockwell Collins, Inc. (Rockwell) ADC–85, ADC–85A, ADC–850C, and ADC–850F air data computers that are installed on airplanes. This proposal was published in the **Federal Register** as a notice of proposed rulemaking (NPRM) on October 2, 2000 (65 FR 58678). The NPRM proposed to require you to:

—Remove the ADC from the airplane;
—Replace or reprogram applicable parts or Circuit Card Assemblies on the CPU Circuit Card;
—Test the modified ADC; and
—Install the modified ADC in the airplane.

You would have to accomplish the proposed actions in accordance with Rockwell Service Bulletin No. 62 (ADC–85/85A/850C/850F–34–62), dated October 25, 1999.

Was the Public Invited To Comment?

The FAA encouraged interested persons to participate in the making of this amendment. The following presents the comments received on the proposal and FAA's response to each comment:

Comment Issue No. 1: Remove Dassault Aviation Model F2000 From the Applicable Airplane Model List

What Is the Commenter's Concern?

A commenter states that, even though fitted with the subject ADC, the Dassault Aviation Model F2000 airplane is not designed with the ability to use alternate static sources.

What Is FAA's Response to the Concern?

We concur that the airplane is not designed with the ability to use alternate static sources. Therefore, we are removing the Dassault Aviation Model F2000 from the applicable airplane model list.

Comment Issue No. 2: Modify the Estimate of the Number of Airplanes Affected on the U.S. Registry

What Is the Commenter's Concern?

A commenter states that more aircraft are affected than the 245 listed in the NPRM. The commenter notes that the ADC is installed in additional aircraft and is installed on at least 329 airplanes.

What Is FAA's Response to the Concern?

The number of airplanes affected by this AD could exceed 245. We have no way of determining the exact number that have the affected ADCs installed. Our best estimate in the NPRM was 245 airplanes. Further research indicates that at least 329 airplanes could have the ADC installed. Therefore, we will change the cost impact to represent an estimate of 329 airplanes instead of 245 airplanes.

Comment Issue No. 3: Modify the List of Applicable Raytheon Airplanes

What Is the Commenter's Concern?

A commenter states that the list of affected airplanes is incorrect for Raytheon airplane models. The list incorrectly identifies two of the Raytheon airplane models as 250 and 350. The commenter states that these are marketing designators and not part of FAA's model identity. For the ADC–85/ADC–85A units, the commenter states that the correct models are Raytheon B200, B300, and 1900D, and that the Model C90A airplanes should be added to the list.

What Is FAA's Response to the Concern?

We concur with these comments and are changing this proposed rule accordingly.

Comment Issue No. 4: Add a Placard for Temporary Information Regarding the Unsafe Condition

What Is the Commenter's Concern?

A commenter states that the pilot should have some kind of indication of the problem if the actions specified in the service bulletin are not yet incorporated on the airplane (*e.g.,* during the 12 calendar month time before mandatory compliance). This commenter suggests that FAA should require the operators to install a placard until the modification is incorporated.

What Is FAA's Response to the Concern?

The FAA does not concur. We evaluated the nature of the unsafe condition against the time proposed for compliance when preparing the NPRM. Rockwell Collins did issue Operator Bulletin 99–7, dated August 1999, which provides information on such a placard. Although it is a good idea to incorporate the actions of this operator bulletin, we have determined that the modification as proposed, including the compliance time, addresses the unsafe condition.

We will include a note in the proposed AD recommending compliance with Rockwell Collins Operator Bulletin 99–7, dated August 1999.

Comment Issue No. 5: Recommend the Effective Date of the AD to Accommodate Production Aircraft

What Is the Commenter's Concern?

A commenter recommends that FAA establish the effective date of the AD to accommodate incorporation of the AD into production aircraft. The commenter suggests May 1, 2001, or later, as the effective date of the AD.

What Is FAA's Response to the Concern?

The FAA will take this into consideration when establishing the effective date.

Comment Issue No. 6: Make Reference to a Later Service Bulletin for a More Complete List of Affected Units

What Is the Commenter's Concern?

A commenter states that Rockwell Collins Service Bulletin No. 62 (ADC–85/85A/850C/850D/850E/850F–34–62), Revision 2, dated March 7, 2000, contains a more complete list of affected units. The commenter recommends the incorporation of this service bulletin into the AD.

What Is FAA's Response to the Concern?

The FAA concurs that Revision 2 of the service bulletin contains a more complete list of affected ADC units. Revision 2 reflects the removal of ADC–850C from the affected list and adds ADC–850D to the affected list. However, Service Bulletin No. 62, dated October 25, 1999, is acceptable for ADC–85/85A/850F units. Service Bulletin No. 62, Revision 2, dated March 7, 2000, is acceptable for ADC–85/85A/850D/850F units. We will incorporate this bulletin into the proposed AD and change the proposed AD applicability accordingly.

The FAA's Determination

What Has FAA Decided?

After examining the circumstances and reviewing all available information related to the incidents described above, we have determined that:

—The unsafe condition exists or could develop on airplanes equipped with

all ADC units identified in the E. Compliance section of Rockwell Collins Service Bulletin No. 62, Revision 2, dated March 7, 2000.

—The NPRM should be expanded to include these additional units; and

—AD action should be taken in order to correct this unsafe condition.

The Supplemental NPRM

How Will the Changes to the NPRM Impact the Public?

Proposing that the NPRM apply to certain ADC–850D air data computers that are installed on airplanes presents actions that go beyond the scope of what was already proposed. Therefore, we are issuing a supplemental NPRM and reopening the comment period to allow the public additional time to comment on the proposed AD.

What Are the Provisions of the Supplemental NPRM?

This proposed AD would require you to replace any affected ADC with one that has a reprogrammed and tested CPU circuit card and circuit card assemblies

Cost Impact

How Many Airplanes Would This Proposed AD Impact?

We estimate that this proposed AD affects more than 329 airplanes in the U.S. registry.

What Would Be the Cost Impact of This Proposed AD on Owners/Operators of the Affected Airplanes?

We estimate the following costs to accomplish the proposed removal, installation, reprogramming, and testing of the ADC in each airplane:

Labor cost	Parts cost	Total cost per airplane	Total cost on U.S. operators
6 workhours × $60 per hour = $360	$680	$1040	$342,160

For units that are still under warranty, Rockwell will provide the parts and labor at no charge.

Regulatory Impact

Would This Proposed AD Impact Various Entities?

The regulations proposed herein would not have a substantial direct effect on the States, on the relationship between the national government and the States, or on the distribution of power and responsibilities among the various levels of government. Therefore, it is determined that this proposed rule would not have federalism implications under Executive Order 13132.

Would This Proposed AD Involve a Significant Rule or Regulatory Action?

For the reasons discussed above, I certify that this proposed action (1) Is not a ''significant regulatory action'' under Executive Order 12866; (2) is not a ''significant rule'' under DOT Regulatory Policies and Procedures (44 FR 11034, February 26, 1979); and (3) if promulgated, will not have a significant economic impact, positive or negative, on a substantial number of small entities under the criteria of the Regulatory Flexibility Act. A copy of the draft regulatory evaluation prepared for this action has been placed in the Rules Docket. A copy of it may be obtained by contacting the Rules Docket at the location provided under the caption **ADDRESSES**.

List of Subjects in 14 CFR Part 39

Air transportation, Aircraft, Aviation safety, Safety.

The Proposed Amendment

Accordingly, under the authority delegated to me by the Administrator, the Federal Aviation Administration proposes to amend part 39 of the Federal Aviation Regulations (14 CFR part 39) as follows:

PART 39—AIRWORTHINESS DIRECTIVES

1. The authority citation for part 39 continues to read as follows:

Authority: 49 U.S.C. 106(g), 40113, 44701.

§ 39.13 [Amended]

2. FAA amends § 39.13 by adding a new airworthiness directive (AD) to read as follows:

Rockwell Collins, Inc.: Docket No. 2000–CE–14–AD.

(a) *What airplanes are affected by this AD?* This AD affects the following Rockwell Collins air data computers (ADC) that are installed in, but not limited to the airplanes that are listed below:

(1) Affected ADCs:

Unit	Collins part No. (CPN)	Applicable to serial No.
ADC–85 (Incorporating Rockwell Collins Service Bulletin No. 58)	622–8051–002 622–8051–003	All units.
ADC–85A (Incorporating Rockwell Collins Service Bulletin No. 58)	822–0370–113 822–0370–123 822–0370–139 822–0370–404 822–0370–408	All units.
ADC–850D (Incorporating Rockwell Collins Service Bulletin No. 58)	822–0389–133	All up to and including 3DGW (except for 1P6D, 22RC–22RF, and 23WK–3DGP).
ADC–850F	822–1036–406 822–1036–418	All units.

(2) List of airplanes where the affected ADC could be installed. This is not a comprehensive list and airplanes not on this list that have the ADC installed through field approval or other methods are still affected by this AD:

Unit	Airplane model
ADC–85/ADC–85A	Astra AIA. Chinese Y7 and Y8. Czech LET–610. DC–8. Falcon 20F. Piaggio P–180. Raytheon B200, B300, C90A and 1900D. Saab 340.
ADC–850D	Lear 60.
ADC–850F	Falcon 20, 50, and 50EX.

(b) *Who must comply with this AD?* Anyone who wishes to operate any airplane that uses one of the above referenced Rockwell Collins air data computers must comply with this AD.

(c) *What problem does this AD address?* The actions specified by this AD are intended to prevent an unwarranted display of the ADC flag when switching static air sources. This could cause the flight crew to react to this incorrect flight information and possibly result in an unsafe operating condition.

(d) *What actions must I accomplish to address this problem?* To address this problem, you must accomplish the following:

Actions	Compliance	Procedures
(1) Perform the following, unless already accomplished:. (i) Remove any affected ADC from the airplanes (ii) As applicable, replace or reprogram parts or circuit card assemblies on central processing unit (CPU) circuit cards (iii) Test the ADC (iv) Install the modified ADC in the airplanes	Within the next 12 calendar months after the effective date of this AD.	In accordance with Rockwell Collins Service Bulletin No. 62 (ADC–85/85A/850C/850D/850E/850F–34–62), Revision 2, dated March 7, 2000, or Service Bulletin No. 62, dated October 25, 1999, as applicable, the applicable Collins Computer Component Maintenance Manual, and Collins Avionics Standard Shop Practices Instruction Manual.
(2) Do not install on any airplane one of the affected ADCs unless the modification and test required by paragraphs (d)(ii) and (d)(iii) of this AD are accomplished.	As of the effective date of this AD	In accordance with Rockwell Collins Service Bulletin No. 62 (ADC–85/85A/850C/850D/850E/850F–34–62), Revision 2, dated March 7, 2000, or Service Bulletin No. 62, dated October 25, 1999, as applicable.

Note 1: Rockwell Collins Operator Bulletin 99–7, dated August 1999, contains information about an operational placard to install until accomplishment of the actions of this AD. While not necessary to address the unsafe condition in this AD, FAA highly recommends that you incorporate this placard.

(e) *Can I comply with this AD in any other way?* You may use an alternative method of compliance or adjust the compliance time if:

(1) Your alternative method of compliance provides an equivalent level of safety; and

(2) The Manager, Wichita Aircraft Certification Office (ACO), approves your alternative. Send your request through an FAA Principal Maintenance Inspector, who may add comments and then send it to the Manager, Wichita ACO.

Note 2: This AD applies to each airplane identified in paragraph (a) of this AD, regardless of whether it has been modified, altered, or repaired in the area subject to the requirements of this AD. For airplanes that have been modified, altered, or repaired so that the performance of the requirements of this AD is affected, the owner/operator must request approval for an alternative method of compliance in accordance with paragraph (e) of this AD. The request should include an assessment of the effect of the modification, alteration, or repair on the unsafe condition addressed by this AD; and, if you have not eliminated the unsafe condition, specific actions you propose to address it.

(f) *Where can I get information about any already-approved alternative methods of compliance?* Contact Roger A. Souter, FAA, Wichita Aircraft Certification Office (ACO), 1801 Airport Road, Room 100, Wichita, Kansas 67209; telephone: (316) 946–4134; facsimile: (316) 946–4407, e-mail: *Roger.Souter@faa.gov.*

(g) *What if I need to fly the airplane to another location to comply with this AD?* The FAA can issue a special flight permit under sections 21.197 and 21.199 of the Federal Aviation Regulations (14 CFR 21.197 and 21.199) to operate your airplane to a location where you can accomplish the requirements of this AD.

(h) *How do I get copies of the documents referenced in this AD?* You may get copies of the documents referenced in this AD from Rockwell Collins, Business and Regional Systems, 400 Collins Road Northeast, Cedar Rapids, Iowa 52498. You may view these documents at FAA, Central Region, Office of the Regional Counsel, 901 Locust, Room 506, Kansas City, Missouri 64106.

Issued in Kansas City, Missouri, on March 12, 2002.

Dorenda D. Baker,

Acting Manager, Small Airplane Directorate, Aircraft Certification Service.

[FR Doc. 02–6629 Filed 3–19–02; 8:45 am]

BILLING CODE 4910–13–P

DEPARTMENT OF TRANSPORTATION

Federal Aviation Administration

14 CFR Part 39

[Docket No. 2000–CE–76–AD]

RIN 2120–AA64

Airworthiness Directives; Air Tractor, Inc. Model AT–802 and AT–802A Airplanes

AGENCY: Federal Aviation Administration, DOT.

ACTION: Notice of proposed rulemaking (NPRM).

SUMMARY: This document proposes to adopt a new airworthiness directive (AD) that would apply to certain Air Tractor, Inc. (Air Tractor) Model AT–802 and AT–802A airplanes. This

proposed AD would require you to replace the rudder control cables and fairleads with parts of improved design. This proposed AD is the result of a report that a rudder control cable broke because of wear at the aft fairlead. The actions specified by this proposed AD are intended to prevent wear of the rudder control cables at the fairlead, which could cause the rudder control cable to break and result in loss of rudder control.

DATES: The Federal Aviation Administration (FAA) must receive any comments on this rule on or before May 17, 2002.

ADDRESSES: Submit comments to FAA, Central Region, Office of the Regional Counsel, Attention: Rules Docket No. 2000–CE–76–AD, 901 Locust, Room 506, Kansas City, Missouri 64106. You may view any comments at this location between 8 a.m. and 4 p.m., Monday through Friday, except Federal holidays. You may also send comments electronically to the following address: *9-ACE-7-Docket@faa.gov.* Comments sent electronically must contain ''Docket No. 2000–CE–76–AD'' in the subject line. If you send comments electronically as attached electronic files, the files must be formatted in Microsoft Word 97 for Windows or ASCII text.

You may get service information that applies to this proposed AD from Air Tractor, Incorporated, P.O. Box 485, Olney, Texas 76374. You may also view this information at the Rules Docket at the address above.

FOR FURTHER INFORMATION CONTACT: Garry D. Sills, Aerospace Engineer, FAA, Fort Worth Airplane Certification Office, 2601 Meacham Boulevard, Fort Worth, Texas 76193–0150; telephone: (817) 222–5154; facsimile: (817) 222–5960.

SUPPLEMENTARY INFORMATION:

Comments Invited

How Do I Comment on This Proposed AD?

The FAA invites comments on this proposed rule. You may submit whatever written data, views, or arguments you choose. You need to include the rule's docket number and submit your comments to the address specified under the caption **ADDRESSES.** We will consider all comments received on or before the closing date. We may amend this proposed rule in light of comments received. Factual information that supports your ideas and suggestions is extremely helpful in evaluating the effectiveness of this proposed AD action and determining whether we need to take additional rulemaking action.

Are There Any Specific Portions of This Proposed AD I Should Pay Attention to?

The FAA specifically invites comments on the overall regulatory, economic, environmental, and energy aspects of this proposed rule that might suggest a need to modify the rule. You may view all comments we receive before and after the closing date of the rule in the Rules Docket. We will file a report in the Rules Docket that summarizes each contact we have with the public that concerns the substantive parts of this proposed AD.

How Can I Be Sure FAA Receives My Comment?

If you want FAA to acknowledge the receipt of your mailed comments, you must include a self-addressed, stamped postcard. On the postcard, write ''Comments to Docket No. 2000–CE–76–AD.'' We will date stamp and mail the postcard back to you.

Discussion

What Events Have Caused This Proposed AD?

The FAA received reports of the rudder control cables wearing at the aft fairlead area on Air Tractor Model AT–802 and AT–802A airplanes. In one instance the rudder cable broke on a Model AT–802 airplane.

The manufacturer has designed a new cable that incorporates a stainless steel sleeve that is crimped to the cable in the fairlead area. The stainless steel sleeve is intended to prevent wear of the new cable in that area.

What Are the Consequences if the Condition Is Not Corrected?

If this condition is not corrected, rudder control cables may wear and break at the fairlead area. Broken rudder control cables could result in loss of rudder control.

Is There Service Information That Applies to This Subject?

Air Tractor has issued Snow Engineering Company Service Letter # 199, dated May 30, 2000.

What Are the Provisions of This Service Bulletin?

The service bulletin includes procedures for installing the improved design rudder control cables and fairleads.

The FAA's Determination and an Explanation of the Provisions of this Proposed AD

What Has FAA Decided?

After examining the circumstances and reviewing all available information related to the incidents described above, we have determined that:

—the unsafe condition referenced in this document exists or could develop on other Air Tractor Model AT–802 and AT–802A airplanes of the same type design;

—the actions specified in the previously-referenced service information should be accomplished on the affected airplanes; and

—AD action should be taken in order to correct this unsafe condition.

What Would This Proposed AD Require?

This proposed AD would require you to install the improved design rudder control cables and fairleads.

Cost Impact

How Many Airplanes Would This Proposed AD Impact?

We estimate that this proposed AD affects 81 airplanes in the U.S. registry.

What Would Be the Cost Impact of This Proposed AD on Owners/Operators of the Affected Airplanes?

We estimate the following costs to accomplish the proposed modification:

Labor cost	Parts cost	Total cost per airplane	Total cost on U.S. operators
2 workhours × $60 per hour = $120	$300	$420	$34,020

Regulatory Impact

Would This Proposed AD Impact Various Entities?

The regulations proposed herein would not have a substantial direct effect on the States, on the relationship between the national government and the States, or on the distribution of power and responsibilities among the various levels of government. Therefore, it is determined that this proposed rule would not have federalism implications under Executive Order 13132.

Would This Proposed AD Involve a Significant Rule or Regulatory Action?

For the reasons discussed above, I certify that this action (1) is not a ''significant regulatory action'' under Executive Order 12866; (2) is not a ''significant rule'' under DOT Regulatory Policies and Procedures (44 FR 11034, February 26, 1979); and (3) if promulgated, will not have a significant economic impact, positive or negative, on a substantial number of small entities under the criteria of the Regulatory Flexibility Act. A copy of the draft regulatory evaluation prepared for this action has been placed in the Rules Docket. A copy of it may be obtained by contacting the Rules Docket at the location provided under the caption **ADDRESSES.**

List of Subjects in 14 CFR Part 39

Air transportation, Aircraft, Aviation safety, Safety.

The Proposed Amendment

Accordingly, under the authority delegated to me by the Administrator, the Federal Aviation Administration proposes to amend part 39 of the Federal Aviation Regulations (14 CFR part 39) as follows:

PART 39—AIRWORTHINESS DIRECTIVES

1. The authority citation for part 39 continues to read as follows:

Authority: 49 U.S.C. 106(g), 40113, 44701.

§ 39.13 [Amended]

2. FAA amends § 39.13 by adding a new airworthiness directive (AD) to read as follows:

Air Tractor, Inc.: Docket No. 2000–CE–76–AD.

(a) *What airplanes are affected by this AD?* This AD affects Model AT–802 and AT–802A airplanes, serial numbers 802–0001 through 802–0081, that are certificated in any category.

(b) *Who must comply with this AD?* Anyone who wishes to operate any of the airplanes identified in paragraph (a) of this AD must comply with this AD.

(c) *What problem does this AD address?* The actions specified by this AD are intended to prevent wear of the rudder control cables at the fairlead, which could cause the rudder control cable to break and result in loss of rudder control.

(d) *What actions must I accomplish to address this problem?* To address this problem, you must accomplish the following:

Actions	Compliance	Procedures
(1) Replace the rudder control cables and fairlead with part numbers 70524–10–500 or 70524–6–500, and 70122–1, as specified in the service letter.	Within the next 500 hours time-in-service (TIS) after the effective date of this AD, unless already accomplished.	Accomplish the replacements in accordance with Snow Engineering Company Service Letter # 199, dated May 30, 2000, and applicable drawing number 70523 of the replacement kit, as specified in the service letter.
(2) Do not install any rudder control cable that does not have a stainless steel sleeve crimped to the cable in the fairlead area.	Not Applicable	Not Applicable.

(e) *Can I comply with this AD in any other way?* You may use an alternative method of compliance or adjust the compliance time if:

(1) Your alternative method of compliance provides an equivalent level of safety; and

(2) The Manager, Fort Worth Airplane Certification Office (ACO), approves your alternative. Submit your request through an FAA Principal Maintenance Inspector, who may add comments and then send it to the Manager, Fort Worth ACO.

Note: This AD applies to each airplane identified in paragraph (a) of this AD, regardless of whether it has been modified, altered, or repaired in the area subject to the requirements of this AD. For airplanes that have been modified, altered, or repaired so that the performance of the requirements of this AD is affected, the owner/operator must request approval for an alternative method of compliance in accordance with paragraph (e) of this AD. The request should include an assessment of the effect of the modification, alteration, or repair on the unsafe condition addressed by this AD; and, if you have not eliminated the unsafe condition, specific actions you propose to address it.

(f) *Where can I get information about any already-approved alternative methods of compliance?* Contact Garry D. Sills, Aerospace Engineer, FAA, Fort Worth Airplane Certification Office, 2601 Meacham Boulevard, Fort Worth, Texas 76193–0150; telephone: (817) 222–5154; facsimile: (817) 222–5960.

(g) *What if I need to fly the airplane to another location to comply with this AD?* The FAA can issue a special flight permit under sections 21.197 and 21.199 of the Federal Aviation Regulations (14 CFR 21.197 and 21.199) to operate your airplane to a location where you can accomplish the requirements of this AD.

(h) *How do I get copies of the documents referenced in this AD?* You may get copies of the documents referenced in this AD from Air Tractor, Incorporated, P.O. Box 485, Olney, Texas 76374. You may view these documents at FAA, Central Region, Office of the Regional Counsel, 901 Locust, Room 506, Kansas City, Missouri 64106.

Issued in Kansas City, Missouri, on March 12, 2002.

Dorenda D. Baker,

Acting Manager, Small Airplane Directorate, Aircraft Certification Service.

[FR Doc. 02–6628 Filed 3–19–02; 8:45 am]

BILLING CODE 4910–13–P

CONSUMER PRODUCT SAFETY COMMISSION

16 CFR Chapter II

Regulatory Options for Addressing Upholstered Furniture Flammability; Public Meeting

AGENCY: Consumer Product Safety Commission.

ACTION: Notice of public meeting and request for comments.

SUMMARY: The Consumer Product Safety Commission (CPSC or Commission) will conduct a public meeting June 18–19, 2002 to discuss options for addressing upholstered furniture flammability. The meeting is not a Commission hearing. The focus of the discussions will be the supporting information and draft upholstered furniture flammability standard developed by CPSC staff included in the October 30, 2001 briefing package entitled ''Upholstered Furniture Flammability: Regulatory Options,'' the progress of outside groups in addressing the same problem, and recent developments in related

flammability issues.[1] The Commission invites written comments and oral presentations from individuals, associations, firms, and government agencies with information or comments related to the briefing package. The Commission will evaluate these submissions in its deliberations on the flammability hazards associated with upholstered furniture.

DATES: The meeting will begin at 10:00 a.m. on June 18, 2002, and continue on June 19, 2002. Requests to make oral presentations, and 10 copies of the text of the presentation, must be received by the CPSC Office of the Secretary no later than May 20, 2002. Persons making presentations at the meeting should provide an additional 50 copies for dissemination on the date of the meeting. Written submissions that are in place of, or in addition to oral presentations, must be received by the Office of the Secretary no later than July 18, 2002. Ten copies should be provided.

Presentation texts and other written submissions should identify the author's affiliation with, or employment or sponsorship by, any entity with an interest in the upholstered furniture proceeding. Any data, analyses or studies should include substantiation and citations. The Commission reserves the right to limit the number of persons who make presentations and the duration of their presentations.

ADDRESSES: The meeting will be in room 420 of the East-West Towers Building, 4330 East-West Highway, Bethesda, MD. Written comments, requests to make oral presentations, and texts of oral presentations should be captioned ''Upholstered Furniture Flammability Proceeding'' and mailed to the Office of the Secretary, Consumer Product Safety Commission, Washington, DC 20207, or delivered to that office, room 502, 4330 East-West Highway, Bethesda, Maryland 20814. Comments, requests, and texts of oral presentations may also be filed by facsimile to (301) 504–0127 or by e-mail to *cpsc-os@cpsc.gov.*

FOR FURTHER INFORMATION CONTACT: For information about the purpose or subject matter of this meeting contact Dale R. Ray, Project Manager, Directorate for Economic Analysis, U.S. Consumer Product Safety Commission, Washington, DC 20207; telephone (301) 504–0962, extension 1323; fax (301) 504–0109; e-mail *dray@cpsc.gov.* For information about the schedule for submission of written comments, requests to make oral presentations, and submission of texts of oral presentations, contact Rockelle Hammond, Office of the Secretary, Consumer Product Safety Commission, Washington, DC 20207; telephone (301) 504–0800, extension 1232; fax (301) 504–0127; e-mail *rhammond@cpsc.gov.*

SUPPLEMENTARY INFORMATION:

A. Background

In 1994, the Commission initiated a regulatory proceeding to address the hazard of small open flame ignitions of upholstered furniture by publication of an advance notice of proposed rulemaking (ANPR). 59 FR 30735 (June 15, 1994). Small open flame sources include, for example, cigarette lighters, matches, and candles. The CPSC staff work indicates that a small open flame performance standard for upholstered furniture could reduce the risk of death, injury, and property loss.

Following issuance of the ANPR, CPSC staff developed a draft performance standard and a test method to evaluate the small open flame performance of upholstered furniture. In October 1997, the staff forwarded a briefing package to the Commission concluding that a small open flame standard was feasible and could effectively reduce the risks to consumers, including risks from both small open flame and cigarette ignitions. Since 1997, the staff has continued to develop the small open flame standard.

The standard that the staff has drafted contains performance requirements for small open flame ignition resistance of seating areas and dust covers of upholstered furniture. It also includes an optional seating barrier test that would allow the use of fire-retardant barriers, or interliners, instead of FR cover fabrics. The seating barrier test is intended to preserve consumer choice among many existing upholstery fabrics. CPSC staff believes that this would give manufacturers flexibility in achieving compliance, and would reduce the potential economic burden of the performance standard, especially for small businesses.

In the 1997 briefing package, the staff recommended that the CPSC gather additional scientific information to ensure that flame retardant (FR) upholstery fabric treatments that manufacturers might use would not result in adverse health effects. In 1998, the Commission held a public hearing on FR chemical issues. Representatives of government, industry, fire safety organizations, and other interested parties testified at the May 5–6, 1998 public hearing, or submitted information about FR chemicals following the hearing. The staff incorporated the information submitted pursuant to the public hearing and all other available scientific data into the FR chemical risk assessment in the October 30, 2001 briefing package. That assessment concluded that four of the eight FR chemicals selected for risk assessment would clearly not be considered hazardous to consumers under the Federal Hazardous Substances Act (FHSA). The assessment also identified one chemical as unlikely to be hazardous, one as hazardous, and two for which additional data were needed.

In the CPSC Fiscal Year 1999 appropriation bill, Congress directed the Commission to sponsor an independent study by the National Academy of Sciences (NAS) of potential health risks from FR chemicals that might be used to meet a flammability standard. The final NAS report was published in July 2000. The NAS study concluded that 8 of the 16 FR chemicals reviewed would present a minimal risk, even under ''worst case'' exposure assumptions. The NAS recommended further study for the remaining 8 chemicals.

B. The Public Meeting

The purpose of the public meeting is to provide a forum for dialog between Commission staff and interested parties on the work performed to date by the staff in developing a draft small open flame ignition standard for upholstered furniture, the related information developed during that effort, the progress of efforts by outside organizations to address the risk, and recent developments in related flammability issues. The meeting is not a Commission hearing.

Participation in the meeting is open. The CPSC staff will notify specific representatives of identified interest groups such as industry sectors (furniture, fabrics, foam, chemicals), fire safety and government (national, state/local, international), and consumer interests of the meeting. The meeting will be conducted in an open discussion format. Participants may be organized into panels to address specific topics. See the **DATES** section of this notice for information on making requests to give oral presentations at the meeting and on making written submissions.

[1] Briefing memorandum from Dale R. Ray, Project Manager, Directorate for Economic Analysis, to the Commission, ''Upholstered Furniture Flammability: Regulatory Options,'' October 30, 2001. The document may be obtained from the CPSC web site at www.cpsc.gov or from the CPSC Office of the Secretary. The document is also available for inspection at the Commission's Public Reading Room, 4330 East-West Highway, room 419, Bethesda, Maryland 20814. For further information call the Office of the Secretary at (301) 504–0800.

C. Meeting Topics

To assist interested parties in deciding on whether and how to participate in the public meeting, or to submit written comments on the staff briefing package, the Commission is providing the following list of topics.

- Fire data & analysis
- Standards development & laboratory testing
- The CPSC staff's draft small open flame standard
- FR chemical testing, analysis & risk assessment
- Economic analysis
- Other standards/harmonization
  —California TB–117
  —United Kingdom regulations
  —Voluntary standards activities
- Industry efforts to develop safer products & materials
- Regulatory alternatives

As indications of interest in making presentations and otherwise participating in the meeting are received, the Commission will revise and update the list of topics.

Dated: March 14, 2002.

Todd A. Stevenson,

Secretary, Consumer Product Safety Commission.

[FR Doc. 02–6633 Filed 3–19–02; 8:45 am]

BILLING CODE 6355–01–P

DEPARTMENT OF HEALTH AND HUMAN SERVICES

Food and Drug Administration

21 CFR Part 101

[Docket No. 01N–0458]

RIN 0910–AA19

Food Labeling; Guidelines for Voluntary Nutrition Labeling of Raw Fruits, Vegetables, and Fish; Identification of the 20 Most Frequently Consumed Raw Fruits, Vegetables, and Fish

AGENCY: Food and Drug Administration, HHS.

ACTION: Proposed rule.

SUMMARY: The Food and Drug Administration (FDA) is proposing to amend the voluntary nutrition labeling regulations by updating the names and the nutrition labeling values for the 20 most frequently consumed raw fruits, vegetables, and fish in the United States. We are taking this action because current regulations require the agency to publish proposed updates (or a notice that the data sets have not changed from the previous publication) at least every 4 years. We also propose to revise the guidelines for the voluntary nutrition labeling of raw fruits, vegetables, and fish to make necessary changes resulting from the updated nutrition information and to provide further clarification of the guidelines. Availability of the updated nutrition labeling values in retail stores and on individually packaged raw produce and fish will enable consumers to make better purchasing decisions to meet their dietary needs.

DATES: Submit written or electronic comments on this proposal by June 3, 2002. See section IX of this document for the proposed effective date of a final rule based on this document.

ADDRESSES: Submit written comments to the Dockets Management Branch (HFA–305), Food and Drug Administration, 5630 Fishers Lane, rm. 1061, Rockville, MD 20852. Submit electronic comments to http://www.fda.gov/dockets/ecomments.

FOR FURTHER INFORMATION CONTACT: Lori LeGault, Center for Food Safety and Applied Nutrition (HFS–840), Food and Drug Administration, 5100 Paint Branch Pkwy., College Park, MD 20740, 301–436–1791, or e-mail: LLegault@cfsan.fda.gov.

SUPPLEMENTARY INFORMATION:

I. Background

In response to requirements of the Nutrition Labeling and Education Act of 1990 (the 1990 amendments) (Public Law 101–135), which amended the Federal Food, Drug, and Cosmetic Act (the act), we published final regulations in the **Federal Register** of November 27, 1991 (56 FR 60880) (the 1991 final rule), and corrections in the **Federal Registers** of March 6, 1992 (57 FR 8174), and March 26, 1992 (57 FR 10522) that: (1) Identified the 20 most frequently consumed raw fruits, vegetables, and fish in the United States, which are those varieties purchased raw but not necessarily consumed raw; (2) established guidelines for the voluntary nutrition labeling of these foods; and (3) set the criteria for food retailers to meet substantial compliance with these guidelines. The 1991 final rule also required us to publish proposed updates of the nutrition labeling data for the 20 most frequently consumed raw fruits, vegetables, and fish (or a notice that the data sets have not changed) at least every 2 years (56 FR 60880 at 60888 and 60891).

Next, we published a proposed rule on the voluntary nutrition labeling program in the **Federal Register** of July 18, 1994 (59 FR 36379) (the 1994 proposed rule), and a correction in the **Federal Register** of July 21, 1994 (59 FR 37190). The 1994 proposed rule proposed to: (1) Update the nutrition labeling values for the 20 most frequently consumed raw fruits, vegetables, and fish in the United States; and (2) revise the guidelines for the voluntary nutrition labeling of these foods to reflect the 1993 mandatory nutrition labeling final rules.

Finally, in the **Federal Register** of August 16, 1996 (61 FR 42742), we published a final rule entitled ''Food Labeling; Guidelines for Voluntary Nutrition Labeling of Raw Fruits, Vegetables, and Fish; Identification of the 20 Most Frequently Consumed; and Policy for Data Base Review for Voluntary and Mandatory Nutrition Labeling'' (the 1996 final rule). In the 1996 final rule, among other actions, we revised: (1) The nutrition labeling values for the 20 most frequently consumed raw fruits, vegetables, and fish in the United States, and (2) the guidelines for the voluntary nutrition labeling of these foods. We also modified the guidelines in § 101.45(b) (21 CFR 101.45(b)), in response to comments, to state that we would publish every 4 years (rather than 2 years) proposed updates of the nutrition data or a notice that the data sets have not changed from the previous publication (comment 12, 61 FR 42742 at 42746 and 42760).

We are now proposing to update the listing of the 20 most frequently consumed raw fruits, vegetables, and fish and their nutrition labeling values based on new data submitted or made available to the agency. This will enable consumers to have more accurate and up-to-date nutrition information for these foods.

II. Guidelines for Presentation of the Nutrition Labeling Values

A. Background and Proposed Revisions

To provide clarity and consistency in the voluntary nutrition labeling of raw fruits, vegetables, and fish, we propose to: (1) Divide current § 101.45(a)(3)(iii) into two parts (i.e., into §§ 101.45(a)(3)(iii) and 101.45(a)(3)(iv)) so that § 101.45(a)(3)(iii) pertains only to raw fruits and vegetables and § 101.45(a)(3)(iv) pertains only to raw fish, and (2) revise the wording for consistency and increased readability. In § 101.45(a)(3)(iii), we also propose to change the portion of the footnote about the saturated fat content of avocados from ''* * * avocados provide 1 gram (g) of saturated fat per ounce (oz)'' to ''* * * avocados provide 0.5 g of saturated fat per oz.'' This decrease in saturated fat content is based on the most recent

nutrient data provided by the California Avocado Commission (Ref. 1), which is discussed in section IV.B.1 of this document.

In the 1996 final rule, we modified the language in § 101.45(a)(3)(iii) for raw fruits and vegetables but, inadvertently, failed to do the same for raw fish. In order to provide parallel provisions for raw fish, we are now proposing: (1) To remove that portion of § 101.45(a)(3)(iii) which currently states "* * * When the nutrition labeling information for raw fish is provided on a chart, the listings for dietary fiber and sugars may be omitted if the following footnote is used 'Fish provide negligible amounts of dietary fiber and sugars'" and (2) to add new § 101.45(a)(3)(iv) to read as follows: "When retailers provide nutrition labeling information for more than one raw fish on signs or posters or in brochures, notebooks, or leaflets, the listings for dietary fiber and sugars may be omitted from the charts or individual nutrition labels if the following footnote is used 'Fish provide negligible amounts of dietary fiber and sugars'."

Currently, appendices C and D to part 101 (21 CFR part 101) provide the nutrition labeling values in a chart format with horizontal and vertical columns. Due to space constraints, we are presenting the nutrition labeling values in a chart format (proposed appendices C and D); however, we encourage retailers to display quantitative nutrition information for raw produce and raw fish as a compilation of nutrition labels in the Nutrition Facts format, with allowance for the shortened footnote shown in figure 1 at the bottom of the sign, poster, brochure, notebook, or leaflet. We are continuing to include the optional nutrient, potassium, in proposed appendices C and D because many raw fruits, vegetables, and fish are good sources of this nutrient. The nutrition label for raw apple shown in figure 1 displays the preferred format. However, as § 101.45(a)(4) indicates, when nutrition labeling is provided for individual raw fruits, vegetables, or fish on packages or in brochures, notebooks, or leaflets (i.e., other than on signs and posters), the full footnote required in § 101.9(d)(9) should be presented within the Nutrition Facts box.

BILLING CODE 4160–01–S

Figure 1

Apple

Nutrition Facts

Serving Size 1 medium (154g/5.5 oz)

Amount Per Serving	
Calories 80	Calories from Fat 0
	% Daily Value*
Total Fat 0g	**0%**
Saturated Fat 0g	**0%**
Cholesterol 0mg	**0%**
Sodium 0mg	**0%**
Potassium 170mg	**5%**
Total Carbohydrate 22g	**7%**
Dietary Fiber 5g	**20%**
Sugars 16g	
Protein 0g	

Vitamin A 2%	•	Vitamin C 8%
Calcium 0%	•	Iron 2%

* Percent Daily Values are based on a 2,000 calorie diet.

B. Impact of the Trans Fatty Acids Proposed Rule

FDA has issued a proposed rule for *trans* fatty acids (also called "*trans* fat") in nutrition labeling (64 FR 62746, November 17, 1999) which, if finalized, will apply to the voluntary nutrition labeling program as well. *Trans* fatty acids are unsaturated fatty acids that have hydrogen atoms attached on opposite sides of a double bond ("*trans*" means "across" in Latin). This

configuration is primarily the result of the hydrogenation process used to harden oils, although *trans* fatty acids are found naturally in some animal products. Thus, *trans* fatty acids would not be expected to be present in raw produce. Accordingly, if the November 17, 1999, proposed rule is finalized to require mandatory labeling of *trans* fat, the agency tentatively concludes that the footnote required in proposed § 101.45(a)(3)(iii) for raw fruits and vegetables should be revised to state: ''Most fruits and vegetables provide negligible amounts of saturated fat, *trans* fat, and cholesterol; avocados provide 0.5 g of saturated fat per oz.'' We invite comments that provide data on the trans fat content of raw fish (or cooked fish without the addition of any ingredients, e.g., fat, breading, or seasoning).

III. Identification of the 20 Most Frequently Consumed Raw Fruits, Vegetables, and Fish in the United States

A. Fruits and Vegetables

FDA is not proposing any changes in the list of the 20 most frequently consumed raw fruits and vegetables in § 101.44 because we are not aware of any new information suggesting that the listing be modified. Nevertheless, for ease of use and to be consistent with the food names in appendix C to part 101, we are proposing to revise § 101.44(a) and (b) by listing the items in alphabetical order and by using the plural form of the food name when the serving size is more than one unit. Thus, we are proposing to revise § 101.44(a) to read as follows: ''The 20 most frequently consumed raw fruits are: Apple, avocado (California), banana, cantaloupe, grapefruit, grapes, honeydew melon, kiwifruit, lemon, lime, nectarine, orange, peach, pear, pineapple, plums, strawberries, sweet cherries, tangerine, and watermelon.'' We are proposing to revise § 101.44(b) to read as follows: ''The 20 most frequently consumed raw vegetables are: Asparagus, bell pepper, broccoli, carrot, cauliflower, celery, cucumber, green (snap) beans, green cabbage, green onion, iceberg lettuce, leaf lettuce, mushrooms, onion, potato, radishes, summer squash, sweet corn, sweet potato, and tomato.''

B. Fish

FDA is proposing to make three changes to the listing of the 20 most frequently consumed raw fish. In the previous voluntary nutrition labeling rules, we used information provided by the National Fisheries Institute (NFI) to identify the most frequently consumed species of fish in the United States (59 FR 36379 at 36384 and 61 FR 42742 at 42743). However, we have obtained more recent information from various industry and government sources indicating that mackerel is sold in the United States primarily as bait and catfood rather than as fresh fish for human consumption (Ref. 2). Furthermore, NFI has reported to us that the consumption of fresh tuna and tilapia in the United States has surpassed the consumption of mackerel and whiting (Refs. 3 and 4). Thus, we are proposing to remove mackerel and whiting from the listing of the 20 most frequently consumed raw fish and to add tuna and tilapia to the list.

Next, we are proposing to collapse the three subspecies of salmon into two subspecies based on similar nutrient profiles (Refs. 5 and 7). In current appendix D to part 101, salmon is divided into three subspecies: Atlantic/coho, chum/pink, and sockeye. This was due primarily to differences in total fat content (i.e., 6 to 7 grams (g) of fat in Atlantic and coho, 4 g of fat in chum and pink, and 9 g of fat in sockeye) (59 FR 36379 at 36383). For this proposed rule, however, we have used updated data from the U.S. Department of Agriculture (USDA), National Nutrient Data Bank (NNDB) (Ref. 6), which is described in section IV.A.2 of this document, and determined that the nutrient profiles for Atlantic, coho, and sockeye salmon are very similar. Specifically, the data show a total fat content of 10 g for Atlantic and sockeye salmon and 9 g for coho salmon. Therefore, we are proposing to combine Atlantic, coho, and sockeye into one subgroup of salmon. Because the data show that chum and pink salmon maintain similar nutrient profiles, we are proposing to keep chum/pink as a second subgroup of salmon.

We are proposing to revise § 101.44(c) based on the changes discussed above and by listing the fish in alphabetical order to read as follows: ''The 20 most frequently consumed raw fish are: Blue crab, catfish, clams, cod, flounder/sole, haddock, halibut, lobster, ocean perch, orange roughy, oysters, pollock, rainbow trout, rockfish, salmon (Atlantic/coho/sockeye, chum/pink), scallops, shrimp, swordfish, tilapia, and tuna.''

IV. Updating the Nutrition Labeling Values for the 20 Most Frequently Consumed Raw Fruits, Vegetables, and Fish

We are proposing to revise the nutrition labeling values for the 20 most frequently consumed raw fruits, vegetables, and fish (proposed appendices C and D to part 101) to reflect newer or additional data for these foods that have been submitted or made available to the agency. FDA has considered whether this updated nutrition labeling information, as proposed, could be used on an interim basis prior to completion of the rulemaking. Because the agency believes that the proposed nutrition labeling values would not be misleading, we do not object to firms using these values prior to issuance of a final rule, provided that the nutrition information is presented in a manner consistent with this proposal. However, firms should be aware that a final rule on this issue may differ from this proposed rule.

Reference 7 provides complete documentation of the derivation of each nutrition labeling value for the fruits, vegetables, and fish covered in this proposal. The following sections (IV.A through IV.C) explain the specific proposed updates.

A. FDA Analysis of the Data

FDA considered the data from all of the sources identified in sections IV.B and IV.C of this document and used these data as the basis for deriving the proposed nutrition labeling values. To the extent possible (i.e., for those nutrients where sufficient data were available), we used the statistical methodology recommended in the ''FDA Nutrition Labeling Manual—A Guide for Developing and Using Data Bases'' (Ref. 8) to produce the nutrition labeling values. The recommended statistical method uses compliance calculations that take into account the variation of nutrients in foods. The nutrient content of foods varies according to inherent, environmental, and processing factors, and some nutrients are more variable than others. The FDA compliance calculations are based on one-sided 95 percent prediction intervals. Thus, the resulting nutrient values are less likely than mean values to overestimate class II nutrients (naturally occurring vitamins, minerals, protein, total carbohydrate, dietary fiber, unsaturated fat, and potassium) (§ 101.9(g)(4)(ii)), or to underestimate third group nutrients (calories, sugars, total fat, saturated fat, cholesterol, and sodium) (§ 101.9(g)(5)). In other words, the calculated values provide with 95 percent probability that the levels of class II nutrients will be at least 80 percent of the label value and that the levels of third group nutrients will not be more than 120 percent of the label value, as required by the compliance criteria in § 101.9(g)(4)(ii) and (g)(5).

Nevertheless, we frequently found in our analyses of the data that the mean

nutrient value and the value derived from compliance calculations rounded to the same nutrition labeling value. We also found, however, that when the sample size was small (e.g., three or fewer analytical data points), the values derived from compliance calculations sometimes resulted in a minimal amount or a complete absence of a nutrient in the food. In these cases, the mean value is more likely to represent the nutrient level. Thus, when it was more appropriate, we propose to use the mean nutrient value rather than the value derived by applying 95 percent prediction intervals, which is noted in the documentation (Ref. 7).

1. Nutrients Not Present in Particular Foods

No analytical data were available for some nutrients due to several well-known principles of food composition. As stated in the 1996 final rule (61 FR 42742 at 42756) and in the 1993 mandatory nutrition labeling final rules (58 FR 2079 at 2109, January 6, 1993), analysis is not needed for nutrients where reliable databases or scientific knowledge establish that a nutrient is not present in the product. Thus, for this proposal, as in the previous voluntary nutrition labeling rules (59 FR 36379 at 36383), we have assumed a zero value for the following nutrients: (1) Cholesterol in fruits and vegetables because cholesterol is found only in animal tissues, (2) saturated fat in all fruits and vegetables that have a zero total fat content because saturated fat is a component included in total fat, (3) dietary fiber in fish because dietary fiber is found only in plant materials, and (4) sugars in fish because sugars are not found (or are very low) in fish.

2. Data From USDA

When using USDA data to update the nutrition labeling values for this proposal, we obtained data directly from the NNDB, where possible (Ref. 6). The NNDB provides raw data that include a collection of statistical parameters representing either a single measurement or multiple measurements for nutrients in foods. USDA has compiled these data from various sources (e.g., government, academic, industry, and private laboratories). From these data, we can identify the number of samples, mean nutrient values, and estimates of variance that are necessary to complete compliance calculations in deriving the nutrition labeling values.

However, every food item in the NNDB does not always have a complete nutrient profile. When the NNDB did not have adequate data for nutrients needed for updating the nutrition labeling values, we used the values in the USDA Nutrient Database for Standard Reference (SR) (Ref. 9). The SR provides aggregated mean values for nutrients, which are primarily derived from data in the NNDB. For some foods, the SR presents a mean value for a nutrient, but the sample size is zero. In these cases, USDA has imputed the nutrient value from other sources, such as, from data for foods with a similar nutrient profile. For fish, when we were not able to obtain new or adequate data for a specific nutrient (e.g., vitamin A and vitamin C), either on the cooked or raw basis, we used the value from the SR for the appropriate cooked fish. The SR includes all the food composition data published in the 21 volumes of Agriculture Handbook No. 8 (USDA, 1976–1988) and its 4 supplements (USDA, 1990–1993). Since 1992, USDA has been publishing updated SR data electronically, which became accessible on the Internet for searching or downloading in 1996. However, the printed Agriculture Handbook No. 8 sections provide more extensive details on specific foods. For example, we have used information on the cooking procedure and yields of cooked fish contained in the 1991 supplement to Agriculture Handbook No. 8–15, ''Composition of Foods: Finfish and Shellfish Products; Raw, Processed, Prepared'' (Ref. 10), which is discussed in section IV.C.1 of this document.

3. Outlier Screening

For this proposed rule, we have completed outlier screening of the data using the Grubb's outlier screening method (Ref. 11). Outliers are unusually extreme data points in a distribution of data that are much lower or higher than the majority of the other data points. They are called ''influential observations'' because an outlier or outliers in a data set will skew the distribution of data so that the mean will be lower (with low outlier values) or higher (with high outlier values) than it would be for the majority of the data. In addition, the range (as a measure of distance) may give a very distorted picture of the variability of the data if outliers are included. Although some outlying observations may be legitimate values that are extreme, an outlier may be the result of imprecise measurement or an error in data entry. In developing our proposed nutrient values, we have taken a conservative approach to outliers and deleted those data points identified through outlier screening.

4. Calories, Calories From Fat, Sugars, and Total Carbohydrate

In developing our proposed nutrient values, we calculated calories and calories from fat based on the Atwater system for determining energy values for individual foods or food groups (i.e., specific factors) rather than using the general factors of 4, 4, and 9 calories per g for protein, total carbohydrate, and total fat, respectively. The Atwater energy factors are outlined in USDA Handbook No. 74, ''Energy Value of Foods—Basis and Derivation'' (Ref. 12). These specific factors take into account the physiological availability of energy for the basic food, and therefore, are more accurate. This is the method referred to in § 101.9(c)(1)(i)(A) for calculating the caloric content of foods. It is the same method used in the previous voluntary nutrition labeling rules (Ref. 5 to the 1996 final rule, 61 FR 42742) except that we are correcting a slight error in the food factors used for green onion and in the carbohydrate factor used for potato. The specific Atwater factors used for calculating calories and calories from fat for the fruits, vegetables, and fish in this proposal are as follows:

Food	Calories per gram		
	Protein	Carbohydrate	Fat
All fruits (except lemon, lime)	3.36	3.60	8.37
Lemon, lime	3.36	2.48	8.37
Mushroom	2.62	3.48	8.37
Potato, sweet potato	2.78	4.03	8.37
Carrot, onion, radish	2.78	3.84	8.37
Other vegetables	2.44	3.57	8.37
Finfish	4.27	NA	9.02
Shellfish	4.27	4.11	9.02

(Ref. 12)

After publication of the 1996 final rule, industry expressed to us that the calorie values for some of the fruits and vegetables appeared to be inconsistent with the label values for total fat, total carbohydrate, and protein. Upon review, we found slight errors in the sugars, total carbohydrate, calories, and calories from fat values in a few fruits and vegetables (as explained below) that are reflected in current appendix C to part 101.

First, we derived most of the sugars values for the fruits and vegetables in current appendix C to part 101 from the USDA Home Economics Research (HER) Report No. 48, ''Sugar Content of Selected Foods: Individual and Total Sugars'' (Ref. 13) because no other sugars data were available to us. While reviewing the values for this proposed update, we discovered an error in the total sugars value for cantaloupe, sweet cherries, tangerine, and celery in current appendix C to part 101. This error was due to an apparent miscalculation in converting the sugars per 100 g of product (as in HER Report No. 48) to the sugars per gram weight of the serving size for the product (as in current appendix C to part 101). Therefore, based on the corrected conversions, we are proposing to change the sugars value for cantaloupe from 11 g to 12 g, for sweet cherries from 19 g to 20 g, for tangerine from 12 g to 8 g, and for celery from 0 g to 1 g.

Second, after correcting the sugars value for cantaloupe and sweet cherries, we found that the sugars value was high compared with the total carbohydrate and dietary fiber values (i.e., the sugars value when added to dietary fiber exceeded total carbohydrate). Because sugars and dietary fiber are components of total carbohydrate, the value for total carbohydrate must be greater than or equal to the sum of the values for sugars and dietary fiber. The apparent discrepancies are because the values for total carbohydrate and dietary fiber were derived from different analytical samples than those used to derive the value for sugars. Therefore, we are proposing to adjust the total carbohydrate value for cantaloupe (from 12 g to 13 g) and sweet cherries (from 22 g to 23 g) to reflect the sum of the values for sugars and dietary fiber (Ref. 7). We consider this adjustment to be appropriate because the values for sugars and dietary fiber are determined by laboratory analysis, and therefore, are more accurate than the value for total carbohydrate, which is determined ''by difference'' (i.e., the weight remaining after subtracting the sum of the protein, fat, moisture, and ash from the total weight of the food (§ 101.9(c)(6))).

Third, the total carbohydrate value for tangerine, reflected in the current regulation, was based on the sum of the values for sugars (12 g) and dietary fiber (3 g), i.e., the total carbohydrate value was adjusted from 13 g (the original value, rounded) to 15 g (the sum of the values for sugars and dietary fiber) (Ref. 5 to the 1996 final rule, 61 FR 42742). However, because the sugars value for tangerine should have been 8 g (as explained previously in this section), the total carbohydrate value should not have been adjusted. Thus, we are proposing to change the total carbohydrate value for tangerine to the original value of 13 g (rounded) based on data submitted to the agency in 1992 by the Produce Marketing Association (Ref. 12 to the 1996 final rule, 61 FR 42742).

Fourth, we previously stated the following in the 1996 final rule:

> In order to have calories from fat consistent for a given total fat value, FDA derived calories from fat for fruits and vegetables from the rounded, rather than unrounded, total fat label value. The caloric equivalent for fat is 8.37 calories per g for fruits and vegetables. Thus, 0.5 g of fat is equivalent to 4.19 calories, and according to § 101.9(c)(1)(ii), ''* * * amounts less than 5 calories may be expressed as zero.'' As a result, Appendix C consistently lists 0 calories for 0.5 g of total fat. (61 FR 42742 at 42750).

However, in our current review of the calorie values, we found that this action (i.e., calculating calories from the rounded total fat label value) conflicts with § 101.9(c)(1)(i), which states,

> * * * Where either specific or general food factors are used, the factors shall be applied to the actual amount (i.e., before rounding) of food components (e.g., fat, carbohydrate, protein, or ingredients with specific food factors) present per serving.

Therefore, in addition to calculating calories on the unrounded basis for the foods for which we obtained new data (as described in sections IV.B and C of this document), we recalculated calorie values for all the remaining foods covered by this proposal based on the unrounded values for total fat, total carbohydrate, and protein (Ref. 7). As a result of these recalculations, we are proposing changes to the calorie or calories from fat values for orange, strawberries, tangerine, watermelon, asparagus, green (snap) beans, and tomato as shown in table 1 in section IV.B.9 of this document.

Reference 7 contains the complete documentation of the nutrition labeling values for each of the fruits, vegetables, and fish covered in this proposal. The documentation includes the actual (unrounded) values for total fat, total carbohydrate, and protein used to calculate calories and calories from fat for each food. For some foods in proposed appendices C and D, the label value for total fat may be the same quantitative amount, yet the value for calories from fat may differ (e.g., for a total fat label value of 0.5 g, the value for calories from fat may be 0 or 5). The reason for the discrepancy, as explained above in this section, is that we calculated calories from fat based on the unrounded amount of total fat, as required by § 101.9(c)(1)(i), rather than on the rounded label value for total fat.

B. Proposed Updates to the Nutrition Labeling of Raw Fruits and Vegetables

1. Avocado

The nutrition labeling values for avocado provided in the current regulations are based on 1989-1990 data from the Produce Marketing Association and 1993–1994 data for potassium, protein, and vitamin C from the California Avocado Commission (CAC). In proposed appendix C to part 101, we have used new data on the composition of avocados that the CAC compiled from 1993 to 1997 and submitted to the agency. These data are the most current available to the agency and the sampling design is the same for each of the 5 years, whereas it differs in the other data collections. Thus, we are proposing to update the nutrition labeling values for avocado by using the 1993–1997 CAC data, which we have subjected to FDA compliance calculations based on 95 percent prediction intervals (Ref. 1). Table 1 of this document shows the proposed changes in the nutrient values for avocado compared with those in the current regulations.

2. Grapefruit

In the 1994 proposed rule, we declared the serving size for grapefruit as ''1/2 medium (154 g/ 5.5 oz)'' (59 FR 36379 at 36391). We adopted the same serving size in the 1996 final rule; however, the oz equivalent was incorrectly printed as 5.3 oz (61 FR 42742 at 42761). Also, current appendix C to part 101 contains this misprint. Thus, we are proposing to correct this error and declare the serving size for grapefruit as ''1/2 medium (154 g/5.5 oz).''

3. Grapes

The nutrition labeling values for grapes that we originally provided in the 1991 final rule were based on data from the NNDB for ''American-type'' grapes. However, after publication of the 1991 final rule, USDA informed us that the grapes described as ''American-

type'' include varieties, such as concord, that are not generally consumed without processing and that the grapes described as ''European-type'' are the most common types of raw grapes consumed in the United States (59 FR 36379 at 36381). USDA stated further that it would be more appropriate for FDA to use data for ''European-type'' grapes as the type most frequently consumed. Therefore, in the 1996 final rule, we derived the nutrition labeling values based on data in the NNDB for ''European-type'' grapes, which we had subjected to FDA compliance calculations based on 95 percent prediction intervals.

Then in 1998, industry raised questions about the published serving size for raw grapes (i.e., 1 1/2 cups (138 g/4.9 oz)) and the corresponding nutrient values. Industry noted that a 138 g serving size for European grapes would fall between 3/4 cup and 1 cup, rather than equate to 1 1/2 cups. When FDA investigated these inquiries, we found that the nutrient data for European grapes were correctly used to calculate the nutrition labeling values, but we had inadvertently used the weight for American grapes to derive the serving size. According to the SR, the density of European grapes is 160 g per cup and the density of American grapes is 92 g per cup (Ref. 9). Based on these densities, the 1 1/2 cup-serving size is equivalent to 240 g for European grapes and 138 g for American grapes. Thus, the current regulatory serving size, which is supposed to reflect the weight of European grapes, is incorrect.

In proposed appendix C to part 101, we have used 1998 data on the composition of grapes that Fleishman-Hilliard, Inc., submitted to the agency on behalf of the California Table Grape Commission (CTGC) (Ref.14). Because the CTGC submission provides newer data, the serving size that we are proposing for grapes is based on the average g weight of the 12 samples in this submission (i.e., 168.2 g per cup), rather than on the density of 160 g per cup provided in the SR. Following the principles in § 101.9(b)(2)(iii) regarding bulk products, the serving size must be the amount in a household measure that most closely approximates the reference amount for the appropriate product category in § 101.12(b). Grapes fit in the product category ''All other fruits (except those listed as separate categories), fresh, canned, or frozen'' with a reference amount of 140 g. Based on the data for the 12 samples, the average weight of 1 cup is 168.2 g and the average weight of 3/4 cup is 126.15 g (Ref. 14). Because 126.15 g (3/4 cup) is closer than 168.2 g (1 cup) to the 140-g reference amount, we are proposing a new serving size of 3/4 cup (126 g/4.5 oz) for grapes. We have subjected the CTGC data to FDA compliance calculations based on 95 percent prediction intervals and used these data in deriving the proposed nutrition labeling values (Ref. 14). Table 1 of this document shows the proposed changes to the serving size and nutrient values for grapes compared with those in the current regulations.

4. Nectarine, Peach, and Plums

In the 1996 final rule, we derived the nutrition labeling values for nectarine, peach, and plums from data in the NNDB, which we had subjected to FDA compliance calculations based on 95 percent prediction intervals. In proposed appendix C to part 101, we have used 1998 data on the composition of nectarines, peaches, and plums that Fleishman-Hilliard, Inc., submitted to the agency on behalf of the California Tree Fruit Agreement (CTFA). The CTFA data were comprised of three composite samples for peaches, three composite samples for plums, and four composite samples for nectarines. However, each of the composite samples represents between 2 and 14 different varieties and a different share of the market for that particular fruit. Due to the small number of composite samples, the varying number of varieties in each composite sample, and the differences in how the samples represent the market, we chose to analyze the data for each of the three types of fruit by weighting the samples according to their market share and to use the resulting mean nutrient values (Ref. 15).

CTFA also provided information on the edible portion weights of peaches and plums that represent the majority of the market (Ref. 16). Based on this information, we are proposing to change the serving size for peach from ''1 medium (98 g/3.5 oz)'' to ''1 medium (147 g/5.3 oz)'' and for plums from ''2 medium (132 g/4.7 oz)'' to ''2 medium (151 g/5.4 oz).'' We are not proposing any change to the serving size for nectarine (i.e., ''1 medium (140 g/5.0 oz)'') because the CTFA data supported the current serving size.

Table 1 of this document shows the proposed changes in the nutrient values for these fruits and the proposed changes to the serving size for peach and plums compared with those in the current regulations.

5. Sweet Cherries

The nutrition labeling values for sweet cherries provided in the current regulations are based on 1990 data from PMA. In proposed appendix C to part 101, we have used 1996 data on the fat composition of raw sweet cherries that Technical Assessment Systems, Inc. (TAS), submitted to the agency on behalf of the California Cherry Advisory Board. Based on these newer data, which included 12 analytical samples that measured the total fat content of sweet cherries, TAS requested that the nutrition labeling value for total fat be changed from 0.5 g to 0 g. We reviewed the TAS data, confirmed that the suggested label value was derived correctly by using compliance calculations based on 95 percent prediction intervals, and used the TAS data in determining the proposed label value of 0 g for total fat (Ref. 17). We also propose to revise the total carbohydrate and sugars values as explained in section IV.A.4 of this document. Table 1 shows the proposed changes to the nutrient values for sweet cherries compared with those in the current regulations.

6. Carrot

In current appendix C to part 101, the serving size for carrot is declared as ''7″ long, 1 1/4″ diameter (78 g/2.8 oz).'' To be consistent with § 101.9(b)(2)(i) for products in discrete units and consistent with § 101.9(b)(5)(iv) in describing the individual unit, we are proposing to include ''1 carrot'' as part of the serving size statement, i.e., ''1 carrot, 7″ long, 1 1/4″ diameter (78 g/2.8 oz).''

7. Green Onion, Sweet Corn, and Sweet Potato

In the 1996 final rule, we derived the nutrition labeling values for raw green onion, sweet corn, and sweet potato by using the NNDB data available at that time. In proposed appendix C to part 101, we have used updated nutrient data from the NNDB for these raw vegetables to derive the proposed nutrition labeling values using compliance calculations based on 95 percent prediction intervals (Ref. 18). Table 1 of this document shows the proposed changes in the nutrient values for green onion, sweet corn, and sweet potato compared with those in the current regulations.

We also are proposing a correction to the serving size for sweet potato. In current appendix C to part 101, the serving size for sweet potato is declared as ''medium, 5″ long, 2″ diameter (130 g/4.6 oz).'' Consistent with § 101.9(b)(2)(i) for products in discrete units, we are proposing to include the number of units in the serving size statement for sweet potato (i.e., ''1 medium, 5″ long, 2″ diameter (130 g/4.6 oz).'')

8. Potato

The nutrition labeling values for potato that we provided in the 1996 final rule were based on 1983-1984 data from PMA. In proposed appendix C to part 101, we have used 2000 market basket data on the composition of potatoes that Ketchum submitted to the agency on behalf of the National Potato Promotion Board (NPPB). The NPPB nutrient data were comprised of three composite samples for each variety of red, russet, and white potatoes. However, according to the NPPB, each of these potato varieties represents a different proportion of the market (i.e., 12 percent for red, 70 percent for russet, and 18 percent for white (Ref. 19). Thus, NPPB requested and we agreed that the data should be weighted by the market share in deriving the nutrient values. After weighting the data, we subjected the values to FDA compliance calculations based on 95 percent prediction intervals to determine the proposed nutrition labeling values (Ref. 19). Table 1 of the document shows the proposed changes in the nutrient values for potato compared with those in the current regulations.

9. Summary of Proposed Changes for Fruits and Vegetables

Table 1 of this document shows a summary of the proposed changes to the nutrition labeling values for 19 raw fruits and vegetables and to the serving size for grapefruit, grapes, peach, plums, carrot, and sweet potato, as compared with those in the current regulations. We are not proposing any changes to the other values in current appendix C to part 101.

TABLE 1.—PROPOSED CHANGES TO THE NUTRITION LABELING INFORMATION FOR RAW FRUITS AND VEGETABLES

Food and Nutrient	Current Values		Proposed Values	
		% Daily Value		% Daily Value
Avocado, California:				
Calories	55		50	
Total Fat	5 g	8%	6 g	9%
Saturated Fat	1 g	5%	0.5 g	3%
Potassium	170 mg	5%	160 mg	5%
Total Carbohydrate	3 g	1%	2 g	1%
Dietary Fiber	3 g	12%	1 g	4%
Cantaloupe:				
Total Carbohydrate	12 g	4%	13 g	4%
Sugars	11 g		12 g	
Grapefruit:				
Serving Size	1/2 medium (154 g/5.3 oz)		1/2 medium (154 g/5.5 oz)	
Grapes:				
Serving Size	1 1/2 cups (138 g/4.9 oz)		3/4 cup (126 g/4.5 oz)	
Calories from Fat	10		0	
Total Fat	1 g	2%	0 g	0%
Sodium	0 g	0%	15 mg	1%
Potassium	270 mg	8%	240 mg	7%
Total Carbohydrate	24 g	8%	23 g	8%
Sugars	23 g		20 g	
Protein	1 g		0 g	
Vitamin A		2%		0%
Vitamin C		25%		2%
Iron		2%		0%
Nectarine:				
Total Fat	0.5 g	1%	0 g	0%
Potassium	300 mg	9%	290 mg	8%
Total Carbohydrate	16 g	5%	17 g	6%
Dietary Fiber	2 g	8%	1 g	4%
Sugars	12 g		13 g	
Vitamin A		4%		8%
Orange:				
Calories	70		80	
Peach:				
Serving Size	1 medium (98 g/3.5 oz)		1 medium (147 g/5.3 oz)	
Calories	40		70	
Potassium	190 mg	5%	260 mg	7%
Total Carbohydrate	10 g	3%	18 g	6%
Sugars	9 g		14 g	
Vitamin A		2%		8%
Vitamin C		10%		15%
Iron		0%		2%

TABLE 1.—PROPOSED CHANGES TO THE NUTRITION LABELING INFORMATION FOR RAW FRUITS AND VEGETABLES—Continued

Food and Nutrient	Current Values		Proposed Values	
		% Daily Value		% Daily Value
Plums:				
Serving Size	2 medium (132 g/4.7 oz)		2 medium (151 g/5.4 oz)	
Calories from Fat	10		0	
Total Fat	1 g	2%	0 g	0%
Potassium	220 mg	6%	250 mg	7%
Total Carbohydrate	19 g	6%	21 g	7%
Sugars	10 g		13 g	
Vitamin A		6%		8%
Vitamin C		20%		10%
Iron		0%		2%
Strawberries:				
Calories	45		50	
Sweet Cherries:				
Total Fat	0.5 g	1%	0 g	0%
Total Carbohydrate	22 g	7%	23 g	8%
Sugars	19 g		20 g	
Tangerine:				
Calories from Fat	0		5	
Total Carbohydrate	15 g	5%	13 g	4%
Sugars	12 g		8 g	
Watermelon:				
Calories	80		100	
Asparagus:				
Calories	25		20	
Carrot:				
Serving Size	7″ long, 1 1/4″ diameter		1 carrot, 7″ long, 1 1/4″ diameter	
Celery:				
Sugars	0 g		1 g	
Green (snap) Beans:				
Calories	25		20	
Green Onion:				
Sodium	5 mg	0%	10 mg	0%
Calcium		0%		2%
Potato:				
Calories	100		40	
Sodium	0 mg	0%	10 mg	0%
Potassium	720 mg	21%	650 mg	19%
Total Carbohydrate	26 g	9%	7 g	2%
Dietary Fiber	3 g	12%	4 g	16%
Sugars	3 g		2 g	
Protein	4 g		3 g	
Vitamin C		45%		40%
Iron		6%		8%
Sweet Corn:				
Calories	80		90	
Calories from Fat	10		20	
Total Fat	1 g	2%	2.5 g	4%
Potassium	240 mg	7%	250 mg	7%
Total Carbohydrate	18 g	6%	16 g	5%
Dietary Fiber	3 g	12%	2 g	8%
Protein	3 g		4 g	

TABLE 1.—PROPOSED CHANGES TO THE NUTRITION LABELING INFORMATION FOR RAW FRUITS AND VEGETABLES—Continued

Food and Nutrient	Current Values		Proposed Values	
		% Daily Value		% Daily Value
Sweet Potato:				
Serving Size	medium, 5″ long, 2″ diameter		1 medium, 5″ long, 2″ diameter	
Calories	130		140	
Potassium	350 mg	10%	340 mg	10%
Total Carbohydrate	33 g	11%	32 g	11%
Iron		2%		4%
Tomato:				
Calories from Fat	0		5	

C. Proposed Updates to the Nutrition Labeling of Raw Fish

For this proposal, we obtained new data for cooked Atlantic salmon and rainbow trout and for the following raw fish: Catfish (only on fat content), flounder/sole, orange roughy, coho and sockeye salmon, shrimp, swordfish, tilapia, and tuna. We also obtained new information on the cooking yield for mollusks, discovered a slight error in the raw weight used to calculate the nutrient values for finfish and crustaceans, and obtained new data on nutrient retention factors (described below). Therefore, in addition to updating the nutrient values based on new data, we reanalyzed the data for the remaining fish, when we used data for raw fish, and adjusted the nutrient values accordingly (Ref. 7).

1. Corrections for Cooking

a. Cooking yield for raw fish. The nutrition labeling values for fish provided in current appendix D to part 101 are based on the cooked edible portion (i.e., 84 g/3 oz) in accordance with § 101.45(a)(2). However, most of the nutrient data used to derive the nutrient values were available only for raw fish. When using data for raw fish, we first had to determine the raw fish weight that would yield 84 g (3 oz) of cooked fish. This adjusted raw fish weight would provide the basis upon which to derive the nutrient values. We calculated the raw weight by dividing the cooked weight (3 oz) by the appropriate cooking yield (i.e., a 75 percent cooking yield for finfish (based on dry heat cooking) and crustaceans (based on moist heat cooking) and a 60 percent cooking yield for mollusks (based on dry heat cooking)) (Refs. 10 and 20).

Therefore, we used data for 4 oz of raw finfish and crustaceans (3 oz ÷ 0.75) and 5 oz of raw mollusks (3 oz ÷ 0.60) to derive the nutrient values for 3 oz of cooked fish (59 FR 36379 at 36382 and 36383).

Since publication of the 1996 final rule, NFI has informed us that oysters are cooked predominately by dry heat while clams and scallops are cooked predominantly by moist heat (Ref. 21). Therefore, based on the cooking procedure and yields of cooked fish provided in Agriculture Handbook No. 8–15 (Ref. 10) for mollusks, we used a 50 percent cooking yield for clams and scallops (moist heat cooking) to determine the correct raw weights on which to base the nutrient data for this proposed rule. We continued to use a 60 percent cooking yield for oysters (dry heat cooking).

We also discovered in the previous data analyses for finfish and crustaceans that instead of using the precise raw weight of 112 g (84 g cooked weight ÷ 0.75 cooking yield) to calculate the nutrient values, we used an approximate raw weight of 110 g. We have corrected this error in proposed appendix D to part 101. Thus, when we used nutrient data for raw fish, we used 4 oz (112 g) of raw finfish and raw crustaceans (blue crab and shrimp), 5 oz (140 g) of raw oysters, and 6 oz (168 g) of raw clams and scallops to obtain nutrition labeling values for 3 oz (84 g) of cooked fish (Refs. 5 and 7).

b. *Nutrient retention factors.* In 1998, USDA issued an updated table of nutrient retention factors that is a major source of nutrient retention data for U.S. food composition databases (Ref. 22). The nutrient retention factors for the type of fish and corresponding cooking procedure are as follows:

Cooking Procedure/ Type of Fish	Nutrient Retention Factors			
	Potassium	Vitamin A	Vitamin C	Iron
Dry Heat:				
Finfish:				
Less than 5% fat	100%	90%	80%	100%
More than 5% fat	100%	85%	80%	100%
Shellfish:				
Oysters	100%	95%	85%	100%
Moist Heat:				
Shellfish (except oysters)	90%	90%	80%	90%

The NNDB and SR provide data for both cooked and raw varieties of fish, but for most varieties, vitamins A and C have very little data (0 to 3 analytical samples). Rather than apply nutrient retention factors to such small samples of data for raw fish, we have used vitamin A and vitamin C values from the SR, adjusted to the appropriate serving size, for cooked finfish (except catfish and tilapia) and cooked shellfish (except scallops) in proposed appendix D to part 101. Because we are using the vitamin A and vitamin C values for these cooked fish, the nutrient retention

factors do not need to be applied. For catfish, application of the nutrient retention factors to vitamins A and C does not change the current value of 0 percent DV. For tilapia, we used data obtained from industry on the raw fish and applied the appropriate nutrient retention factors (Ref. 23). The only SR data that were available for cooked scallops were for breaded and fried, a cooking method that greatly affects the nutrient profile of the fish. Thus, we used data for raw scallops and applied the appropriate nutrient retention factors for potassium, vitamin A, vitamin C, and iron. For blue crab, clams, and shrimp, we used data for the raw fish and applied the appropriate nutrient retention factors for potassium and iron.

2. Catfish

In proposed appendix D to part 101, we have used 1997 data on the fat composition of raw farm-raised catfish that ABC Research Corp. submitted to the agency on behalf of NFI. The nutrition labeling values that we provided for farm-raised catfish in the 1996 final rule were based on values derived from information published in ''Nutrients and Chemical Residues in One-to-Two Pound Mississippi Farm-Raised Channel Catfish,'' by Joyce Nettleton et al. (61 FR 42742 at 42753). For this proposal, we reviewed the newer NFI data consisting of 30 analytical samples that measured the total fat content of farm-raised catfish. We completed compliance calculations based on 95 percent prediction intervals and used these data in determining the proposed label value of 6 g for total fat (Ref. 24). We also have recalculated the values for calories (130) and calories from fat (60) based on the newer data for total fat. Table 2 of this document shows the proposed changes in the nutrient values for catfish compared with those in the current regulations.

3. Flounder/Sole, Rainbow Trout, Orange Roughy, Oysters, Salmon (Atlantic/Coho/Sockeye), Shrimp, and Swordfish

In proposed appendix D to part 101, we have used updated nutrient data from the NNDB for the following fish: Flounder/sole (raw); rainbow trout (cooked, dry heat, farmed); orange roughy (raw); oysters (raw); Atlantic salmon (cooked, farmed); coho salmon (raw, farmed); sockeye salmon (raw); shrimp (raw); and swordfish (raw). We subjected the data to FDA compliance calculations using 95 percent prediction intervals and used these data in deriving the proposed nutrition labeling values for these fish (Ref. 5).

4. Tilapia

In proposed appendix D to part 101, we have used 1999 data on the nutrient composition of raw tilapia that Southern Testing & Research Laboratories, Inc., submitted to the agency on behalf of the American Tilapia Association. The results of analytical testing done by Southern Testing & Research Laboratories, Inc., provided all the required nutrients but not potassium, which may be declared voluntarily. We completed compliance calculations based on 95 percent prediction intervals and determined that the mean values better represent the nutrient levels because of the small number of samples (n=3) analyzed (Ref. 23). To be consistent with our decision to include the optional nutrient, potassium, we have used data published in the journal article entitled ''Comparison of Processing Yield and Nutrient Composition of Cultured Nile Tilapia (Oreochromis niloticus) and Channel Catfish (Ictalurus punctatus)'' by Clement and Lovell to derive the potassium content of tilapia (Ref. 25).

5. Tuna

In proposed appendix D to part 101, we have used data from the NNDB and SR (Refs. 6 and 9) for yellowfin tuna. We selected yellowfin because the Tuna Research Foundation informed us that the species of tuna most commonly eaten fresh is yellowfin (Ref. 26). We subjected the data to FDA compliance calculations using 95 percent prediction intervals and used these data in deriving the proposed nutrition labeling values for tuna (Ref. 5).

6. Summary of Proposed Changes for Fish

Table 2 of this document shows the proposed changes in the nutrition labeling values for fish compared with those in the current regulations. As explained in section III.B of this document, the proposed changes include removal of mackerel and whiting and the addition of tilapia and tuna.

TABLE 2.—PROPOSED CHANGES TO THE NUTRITION LABELING INFORMATION FOR COOKED FISH

Food and Nutrient	Current Values		Proposed Values	
		% Daily Value		% Daily Value
Blue Crab:				
Cholesterol	90 mg	30%	95 mg	32%
Sodium	320 mg	13%	330 mg	14%
Potassium	360 mg	10%	300 mg	9%
Vitamin C		0%		4%
Calcium		8%		10%
Catfish:				
Calories	140		130	
Calories from Fat	80		60	
Total Fat	9 g	14%	6 g	9%
Clams:				
Calories	100		110	
Cholesterol	55 mg	18%	80 mg	27%
Potassium	530 mg	15%	470 mg	13%
Total Carbohydrate	0 g	0%	6 g	2%
Protein	22 g		17 g	
Calcium		6%		8%
Iron		60%		30%

TABLE 2.—PROPOSED CHANGES TO THE NUTRITION LABELING INFORMATION FOR COOKED FISH—Continued

Food and Nutrient	Current Values		Proposed Values	
		% Daily Value		% Daily Value
Cod:				
Calories from Fat	0		5	
Total Fat	0.5 g	1%	1 g	2%
Cholesterol	45 mg	15%	50 mg	17%
Sodium	60 mg	3%	55 mg	2%
Potassium	450 mg	13%	460 mg	13%
Vitamin C		0%		2%
Flounder/Sole:				
Calories from Fat	14		15	
Saturated Fat	0.5 g	3%	0 g	0%
Cholesterol	60 mg	20%	55 mg	18%
Sodium	90 mg	4%	100 mg	4%
Potassium	290 mg	8%	400 mg	11%
Protein	21 g		19 g	
Calcium		2%		0%
Iron		2%		0%
Haddock:				
Cholesterol	80 mg	27%	70 mg	23%
Sodium	85 mg	4%	75 mg	3%
Vitamin A		0%		2%
Halibut:				
Calories	110		120	
Calories from Fat	20		15	
Potassium	490 mg	14%	500 mg	14%
Vitamin A		2%		4%
Iron		4%		6%
Lobster:				
Vitamin A		0%		2%
Calcium		4%		6%
Ocean Perch:				
Saturated Fat	0 g	0%	0.5 g	3%
Vitamin C		0%		2%
Orange Roughy:				
Calories from Fat	10		5	
Potassium	330 mg	9%	340 mg	10%
Vitamin A		0%		2%
Calcium		0%		4%
Iron		0%		2%
Oysters:				
Total Fat	3.5 g	5%	4 g	6%
Cholesterol	115 mg	38%	80 mg	27%
Sodium	190 mg	8%	300 mg	13%
Potassium	390 mg	11%	220 mg	6%
Total Carbohydrate	4 g	1%	6 g	2%
Vitamin C		0%		6%
Pollock:				
Calories	90		100	
Potassium	360 mg	10%	370 mg	11%
Vitamin A		0%		2%
Rainbow Trout:				
Cholesterol	60 mg	20%	55 mg	18%
Protein	21 g		20 g	
Calcium		6%		8%
Rockfish:				
Calories from Fat	20		15	
Total Fat	2 g	3%	1.5 g	2%
Potassium	430 mg	12%	440 mg	13%
Calcium		0%		2%

TABLE 2.—PROPOSED CHANGES TO THE NUTRITION LABELING INFORMATION FOR COOKED FISH—Continued

Food and Nutrient	Current Values		Proposed Values	
		% Daily Value		% Daily Value
Salmon, Atlantic/Coho/Sockeye:	Atlantic & Coho/Sockeye		Atlantic/Coho/Sockeye	
Calories	160/ 180		190	
Calories from Fat	60/ 80		90	
Total Fat	7 g/ 9 g	11%/ 14%	10 g	15%
Saturated Fat	1 g/ 1.5 g	5%/ 8%	2 g	10%
Cholesterol	50 mg/ 75 mg	17%/ 25%	65 mg	22%
Sodium	50 mg/ 55 mg	2%/ 2%	65 mg	3%
Potassium	490 mg/ 320 mg	14%/ 9%	320 mg	9%
Protein	22 g/ 23 g		24 g	
Vitamin A		0%/ 4%		2%
Vitamin C		0%/ 0%		2%
Calcium		0%/ 0%		2%
Iron		4%/ 2%		2%
Salmon, Chum/Pink:				
Potassium	410 mg	12%	420 mg	12%
Calcium		0%		2%
Iron		2%		4%
Scallops:				
Calories	120		140	
Cholesterol	55 mg	18%	60 mg	20%
Sodium	260 mg	11%	310 mg	13%
Potassium	280 mg	8%	430 mg	12%
Total Carbohydrate	2 g	1%	5 g	2%
Protein	22 g		27 g	
Vitamin A		0%		2%
Vitamin C		0%		6%
Calcium		2%		4%
Shrimp:				
Calories	80		100	
Total Fat	1 g	2%	1.5 g	2%
Cholesterol	165 mg	55%	170 mg	57%
Sodium	190 mg	8%	250 mg	10%
Potassium	140 mg	4%	220 mg	6%
Protein	18 g		21 g	
Vitamin A		0%		4%
Vitamin C		0%		4%
Calcium		2%		6%
Iron		15%		6%
Swordfish:				
Calories	130		120	
Calories from Fat	35		50	
Total Fat	4.5 g	7%	6 g	9%
Saturated Fat	1 g	5%	1.5 g	8%
Protein	22 g		16 g	
Tilapia:				
Calories			110	
Calories from Fat			20	
Total Fat			2.5 g	4%
Saturated Fat			1 g	5%
Cholesterol			75 mg	25%
Sodium			30 mg	1%
Potassium			360 mg	10%
Total Carbohydrate			0 g	0%
Dietary Fiber			0 g	0%
Sugars			0 g	
Protein			22 g	
Vitamin A				0%
Vitamin C				2%
Calcium				0%
Iron				2%

TABLE 2.—PROPOSED CHANGES TO THE NUTRITION LABELING INFORMATION FOR COOKED FISH—Continued

Food and Nutrient	Current Values	Proposed Values	
	% Daily Value		% Daily Value
Tuna:			
Calories		130	
Calories from Fat		15	
Total Fat		1.5 g	2%
Saturated Fat		0 g	0%
Cholesterol		50 mg	17%
Sodium		40 mg	2%
Potassium		480 mg	14%
Total Carbohydrate		0 g	0%
Dietary Fiber		0 g	0%
Sugars		0 g	
Protein		26 g	
Vitamin A			2%
Vitamin C			2%
Calcium			2%
Iron			4%

V. Environmental Impact

We have determined under 21 CFR 25.30(k) that this action is of a type that does not individually or cumulatively have a significant effect on the human environment. Therefore, neither an environmental assessment nor an environmental impact statement is required.

VI. Preliminary Regulatory Impact Analysis

FDA has examined the economic implications of these proposed guidelines as required by Executive Order 12866. Executive Order 12866 directs agencies to assess all costs and benefits of available regulatory alternatives and, when regulation is necessary, to select regulatory approaches that maximize net benefits (including potential economic, environmental, public health and safety, and other advantages; distributive impacts; and equity). Executive Order 12866 classifies a rule as significant if it meets any one of a number of specified conditions, including: Having an annual effect on the economy of $100 million, adversely affecting a sector of the economy in a material way, adversely affecting competition, or adversely affecting jobs. A regulation also is considered a significant regulatory action if it raises novel legal or policy issues. FDA has determined that these proposed guidelines are not a significant regulatory action as defined by Executive Order 12866.

Title II of the Unfunded Mandates Reform Act of 1995 (Public Law 104–4) requires cost-benefit and other analyses before any rulemaking if the rule would include a ''Federal mandate that may result in the expenditure by State, local, and tribal governments, in the aggregate, or by the private sector, of $100 million or more (adjusted annually for inflation) in any one year.'' The current inflation-adjusted statutory threshold is $115 million. FDA has determined that this proposed rule containing nutrition labeling guidelines does not constitute a significant rule under the Unfunded Mandates Reform Act.

A. Costs of These Guidelines

The costs of a labeling regulation are the incremental administrative, analytical, redesign, and label inventory disposal costs associated with the regulatory action. Because FDA is providing nutrition values that retailers must use, we expect no analytical or other information costs. The typical sign, the most common means of labeling raw products, has an expected useful life of 6 months. This is well within the compliance period, so we also expect little to no inventory disposal costs.

Administrative and redesign costs depend on retail store behavior. The 1996 final rule had a 1-year compliance period. These guidelines propose compliance at the next applicable uniform compliance date (UCD), which is no sooner than 1 year after the final rule is published in the **Federal Register**. The redesign cost due to this proposed guidance depends crucially on the length of the compliance period: FDA assumes that, all other things equal, the longer the compliance period the lower the cost of implementing the proposed guidelines. Retail stores periodically redesign signs and displays. FDA has information that a normal redesign cycle of a product label is 2 years. This cycle may not apply to retail level signs, but it provides a basis on which to estimate the lifecycle of a display. We assume that some of the retail stores would have redesigned their displays before the effective date of compliance, lowering the redesign cost attributed to these proposed guidelines. FDA invites comments on the normal length of redesign time and cost associated with retail level signs or posters.

The most likely timeline of these guidelines is that they will be published during 2002. Therefore, the effective compliance date of these guidelines would be the next UCD of January 1, 2004, or between 1 and 2 years after the publication of the final guidelines. FDA will modify this analysis if the actual publication date differs from the one described here.

If the final compliance period is 18 months and companies redesign normal labels every 2 years, then 75 percent of companies could be expected to normally redesign their labels during the compliance period. FDA assumes that an informational display will be redesigned with less frequency than a product label since it has a smaller potential impact on the profitability of the food product. We assume a median display redesign cycle of 3 years, which implies that 50 percent of retailers would have redesigned their store displays between their publication and when the new guidelines take effect. A normal redesign still will incur cost associated with verifying that the design conforms to the new guidelines. FDA estimates an average cost of a complete redesign of $100 per store, and estimates that the partial redesign cost allocated to changing the values on the informational signs will be $50 per store, allocated evenly among the years 2002 and 2003.

Approximately 83,000 grocery stores fall under these compliance guidelines. This estimate is based on a Dunn and Bradstreet database search, where the total of 197,000 grocery stores was decreased by the 110,000 stores exempted by Congress since they have annual sales of less than $500,000. Seven thousand six hundred of the remaining stores did not have sales data available. Since 42 percent of the stores that have sales data had sales over $500,000, we assign 42 percent of the stores without sales data to the population subject to compliance. According to the last (1996) compliance survey, approximately 72 percent of stores (73.0 percent for raw fruits and vegetables and 71.2 percent for raw fish) adequately displayed acceptable signs. Although slightly down from the previous (1994) survey, compliance is still well over the 60 percent threshold that would trigger a mandatory rule proposal. FDA assumes that 72 percent or 59,923 stores—the same percentage as the most recent compliance survey—will continue to choose to follow the guidelines.

Table 3 of this document presents the total cost estimates based on the number of stores and the effect of the compliance date. The present value (as of January 2002) cost of complying with the guidelines (the sum of the values in row e in table 3) would be $4,066,000. Firms incur this cost every 4 years (if the nutrient values are revised). If the rate of increase in the cost of redesigning a sign is equal to the 7 percent discount rate used in this analysis, then the present value cost of each redesign would be the same. Because of the uncertainty in nutrition science, the effect of the UCD, the percent of stores following the guidelines, and the rate of cost increase, FDA does not estimate the cost of future guideline updates.

TABLE 3.—COMPLIANCE SCHEDULE AND COST

(a) Adoption Year	2002	2003	2004
(b) Number of Stores	14,980	14,980	29,962
(c) Cost ($) per Store	$50	$50	$100
(d) Total Cost ($) [b x c]	$749,025	$749,025	$2,996,200
(e) Present (Year 2002) Value, 7% discount rate	$749,025	$700,023	$2,616,997

B. Benefits of These Guidelines

In the Regulatory Impact Analysis (RIA) of the Proposed Rules to Amend the Food Labeling Regulations (56 FR 60856, November 27, 1991), FDA stated that the benefit of labeling of raw fruits, vegetables, and fish is a change in purchase behavior that would happen if the information presented was new to some consumers and was important to their consumption decisions. Since a majority of retail stores have displayed this type of information for several years, any incremental change from a single update of the list of foods affected or nutritional values is likely to be small and unmeasurable.

However, these guidelines as amended in the proposed rule would be voluntary; grocery stores would probably not choose to display signs with the updated nutrition information if they felt the information would have no impact. In addition, informational signs must be truthful, and without periodic updates the incremental errors that would build up might eventually erode the ability of these signs to help consumers choose products. This guidance is designed not to create an effective label, but to preserve the effectiveness of existing nutrition labels.

Truthful signs and placards can have an impact on consumer behavior. One of the studies used to estimate the impact of product information on consumer choice for the 1991 RIA was the Special Diet Alert study, or SDA. The SDA is relevant to this analysis because the mode of disseminating truthful and accurate nutrition information in the study, based in retail grocery stores in Baltimore and Washington, DC, was a store display similar to the ones recommended in these guidelines. According to SDA, the presence of a sign displaying nutrition information caused a modest switch by consumers to products with relatively large positive attributes (vitamins and minerals) and a modest switch away from products with relatively large negative attributes (fat and cholesterol). If these guidelines are not periodically revised in light of the best available nutrient data, FDA believes the modest beneficial effect they have on consumer behavior may steadily diminish.

VII. Initial Regulatory Flexibility Analysis

FDA has examined the economic implications of these proposed guidelines as required by the Regulatory Flexibility Act (5 U.S.C. 601–612). If a rule has a significant economic impact on a substantial number of small entities, the Regulatory Flexibility Act requires agencies to analyze regulatory options that would lessen the economic effect of the rule on small entities. FDA finds that these proposed guidelines would not have a significant economic impact on a substantial number of small entities.

The Small Business Administration (SBA) defines a grocery store as small if its annual sales are under $20 million. In the Dunn and Bradstreet search of grocery stores, 98 percent of stores with sales data available meet this definition. Not all stores must follow the guidelines: Stores with sales of $500,000 or less are exempt. Very small non-exempt stores (those of annual sales between $500,000 and $2,000,000) are not in compliance as a group in any of the compliance surveys. However, the percentage of very small non-exempt stores in compliance jumped over 5 percent for fruits and vegetables and just over 1 percent for fish in the latest (1996) survey.

Table 4 of this document presents the store-count percentage levels for stores of varying size. The 1996 compliance survey was not designed to discriminate between stores with sales over $20 million annually and stores with sales between $2 million and $20 million. However, the percentages in the second row are probably very good estimates for the compliance rate of stores considered small by the SBA standard, since so few stores have annual sales over $20 million.

The cost per store in the final column of table 4 of this document takes into account the percent compliance in each category and the varying date of compliance. For all categories, the average cost for a store that complies with the guidelines is $67.85, which is

the present value weighted average of the three different possible time periods and the either $50 or $100 in compliance costs. The average of the two compliance rates is 49.6 percent for stores in the smallest category (table 4, row 1), so the average cost per store for this group is $33.65 (.496 x 67.85). The equivalent average cost per store for table 4, row 2 is $51.70 (.762 x 67.85).

TABLE 4.—COMPLIANCE PERCENTAGES BY STORE SIZE AND COST PER STORE

Annual Sales ($)	Fruit and Vegetable Percent	Raw Fish Percent	Cost per Store
$500,000–$2 million	48.6%	50.5%	$33.65
Greater than $2 million	78.5%	73.9%	$51.70

In addition, the maximum cost for any one firm is $87.34, which is $100 discounted back 2 years at 7 percent for stores which wait until the latest possible date to comply with the guidelines. The smallest firm that could incur this cost is a single location store with sales of $500,000.01. The maximum cost per firm of this guidance is therefore, at most, 0.017 percent of annual revenue.

Both the per store averages and the maximum possible cost of the guidance for a single firm are very small, and will not impose a significant cost on even the smallest non-exempt grocery stores. FDA, therefore, certifies that these guidelines would not have a significant impact on a substantial number of small entities.

VIII. Paperwork Reduction Act of 1995

FDA tentatively concludes that the labeling requirements proposed in this document are not subject to review by the Office of Management and Budget because they do not constitute a ''collection of information'' under the Paperwork Reduction Act of 1995 (44 U.S.C. 3501–3520). Rather, the proposed nutrition labeling would be a ''public disclosure of information originally supplied by the Federal government to the recipient for the purpose of disclosure to the public'' (5 CFR 1320.3(c)(2)).

IX. Effective Date

FDA periodically establishes, by final rule in the **Federal Register**, uniform effective dates for compliance with food labeling regulations (see, e.g., the **Federal Register** of December 23, 1998 (63 FR 71015)). We are proposing that any final rule that may issue based on this proposal become effective in accordance with the uniform effective date for compliance with food labeling requirements, which is not sooner than 1 year following publication of the final rule. However, FDA will not object to voluntary compliance immediately upon publication of the final rule.

X. Comments

Interested persons may submit to the Dockets Management Branch (address above) written comments regarding this proposal by June 3, 2002. Two copies of any comments are to be submitted, except that individuals may submit one copy. Submit electronic comments to http://www.fda.gov/dockets/ecomments. Identify all comments with the docket number found in brackets in the heading of this document. You may review public dockets containing comments to this proposal in the Dockets Management Branch between 9 a.m. and 4 p.m., Monday through Friday.

XI. References

The following references have been placed on display in the Dockets Management Branch (address above) and may be seen by interested persons between 9 a.m. and 4 p.m., Monday through Friday.

1. O'Neill, K. R., ''Statistical Derivation of Raw Avocado Nutrition Label for Appendix C to Part 101: Nutrition Facts for Raw Fruits and Vegetables,'' Center for Food Safety and Applied Nutrition, FDA, August 14, 2001.

2. Memorandum to file, Tom O'Brien, FDA, February 21, 1996.

3. Memorandum of phone conversation between Lee Weddig, National Fisheries Institute and Susan J. Brecher, FDA, June 9, 1997.

4. Letter from Lee J. Weddig, National Fisheries Institute to Susan Brecher, FDA, June 12, 1997.

5. O'Neill, K. R., ''Statistical Derivation of Nutrition Labeling from USDA Data for Appendix D to Part 101: Nutrition Facts for Cooked Fish,'' Center for Food Safety and Applied Nutrition, FDA, May 9, 2001.

6. U.S. Department of Agriculture, National Nutrient Data Bank, maintained at the Nutrient Data Laboratory, Agricultural Research Service, Beltsville Human Nutrition Research Center, Beltsville, MD.

7. LeGault, L. A. and S. J. Brecher, ''Documentation for the Proposed Nutrition Labeling Values for the 20 Most Frequently Consumed Raw Fruits, Vegetables, and Fish,'' Center for Food Safety and Applied Nutrition, FDA, August 2001.

8. Bender, M. M., J. I. Rader, and F. D. McClure, ''Guidance for Industry, FDA Nutrition Labeling Manual—A Guide for Developing and Using Databases,'' Center for Food Safety and Applied Nutrition, FDA, 1998, available on the Internet at http://vm.cfsan.fda.gov/dms/nutrguid.html.

9. U.S. Department of Agriculture, Agricultural Research Service, USDA Nutrient Database for Standard Reference, Release 14, 2001, available on the Internet at USDA's Nutrient Data Laboratory Home Page, http://www.nal.usda.gov/fnic/foodcomp.

10. U.S. Department of Agriculture, ''Composition of Foods: Finfish and Shellfish Products; Raw, Processed, Prepared,'' Agriculture Handbook No. 8–15, 1991 Supplement, pp. 10–11.

11. Grubbs, F. E., ''Procedures for Detecting Outlying Observations in Samples,'' Technometrics, vol. 11, no.1, pp. 1–21, 1969.

12. Merrill, A. L. and B. K. Watt, ''Energy Value of Foods—Basis and Derivation,'' Agriculture Handbook No. 74, U.S. Department of Agriculture, revised 1973, pp. 24–25, available on the Internet at http://www.nal.usda.gov/fnic/foodcomp/Data/Classics/index.html.

13. Matthews, R. H., P. R. Pehrsson, and M. Farhat-Sabet, ''Sugar Content of Selected Foods: Individual and Total Sugars,'' Home Economics Research Report No. 48, U.S. Department of Agriculture, September 1987, available on the Internet at http://www.nal.usda.gov/fnic/foodcomp/Data/index.html#sugar.

14. O'Neill, K. R., ''Statistical Derivation of Raw Grapes Nutrition Label for Appendix C to Part 101: Nutrition Facts for Raw Fruits and Vegetables,'' Center for Food Safety and Applied Nutrition, FDA, August 6, 2001.

15. O'Neill, K. R., ''Statistical Derivation of Nutrition Mean Values from California Tree Fruit Agreement Data for Raw Nectarines, Peaches, and Plums,'' Center for Food Safety and Applied Nutrition, FDA, May 9, 2001.

16. Memorandum to file, Lori A. LeGault, FDA, April 26, 2001.

17. Letter from F. Edward Scarbrough, FDA, to Tom Tjerandsen, representative of the California Cherry Advisory Board, June 18, 1997.

18. O'Neill, K. R., ''Statistical Derivation of Raw Vegetable Nutrition Labels from USDA Data for Appendix C to Part 101: Nutrition Facts for Raw Fruits and Vegetables,'' Center for Food Safety and Applied Nutrition, FDA, April 18, 2001.

19. O'Neill, K. R., ''Statistical Derivation of Raw Potato Nutrition Label for Appendix C to Part 101: Nutrition Facts for Raw Fruits and Vegetables,'' Center for Food Safety and Applied Nutrition, FDA, August 8, 2001.

20. Memorandum of phone conversation between Jacob Exler, U.S. Department of Agriculture, and FDA, March 1, 1993.

21. Memorandum of phone conversation between Richard Gutting, National Fisheries Institute, and Susan J. Brecher, FDA, October 2, 1998.

22. U.S. Department of Agriculture, USDA Table of Nutrient Retention Factors, Release 4, 1998, available on the Internet at http://www.nal.usda.gov/fnic/foodcomp/Data/index.html.

23. O'Neill, K. R., ''Statistical Derivation of Raw Tilapia Nutrition Label for Appendix D to Part 101: Nutrition Facts for Cooked Fish,'' Center for Food Safety and Applied Nutrition, FDA, April 18, 2001.

24. O'Neill, K. R., ''Nutrition Label Values for Total Fat, Calories and Calories From Fat in Farm-Raised Catfish,'' Center for Food Safety and Applied Nutrition, FDA, May 14, 2001.

25. Clement, S. and R. T. Lovell, ''Comparison of Processing Yield and Nutrient Composition of Cultured Nile Tilapia (Oreochromis niloticus) and Channel Catfish (Ictalurus punctatus),'' Aquaculture, 119:299–310, 1994.

26. Memorandum of phone conversation between Randi Thomas, Tuna Research Foundation, and Susan J. Brecher, FDA, February 11, 1998.

List of Subjects in 21 CFR Part 101

Food labeling, Nutrition, Reporting and recordkeeping requirements.

Therefore, under the Federal Food, Drug, and Cosmetic Act and under the authority delegated to the Commissioner of Food and Drugs, FDA proposes to amend 21 CFR part 101 as follows:

PART 101—FOOD LABELING

1. The authority citation for 21 CFR part 101 continues to read as follows:

Authority: 15 U.S.C. 1453, 1454, 1455; 21 U.S.C. 321, 331, 342, 343, 348, 371; 42 U.S.C. 243, 264, 271.

2. Section 101.44 is revised to read as follows:

§ 101.44 What are the 20 most frequently consumed raw fruits, vegetables, and fish in the United States?

(a) The 20 most frequently consumed raw fruits are: Apple, avocado (California), banana, cantaloupe, grapefruit, grapes, honeydew melon, kiwifruit, lemon, lime, nectarine, orange, peach, pear, pineapple, plums, strawberries, sweet cherries, tangerine, and watermelon.

(b) The 20 most frequently consumed raw vegetables are: Asparagus, bell pepper, broccoli, carrot, cauliflower, celery, cucumber, green (snap) beans, green cabbage, green onion, iceberg lettuce, leaf lettuce, mushrooms, onion, potato, radishes, summer squash, sweet corn, sweet potato, and tomato.

(c) The 20 most frequently consumed raw fish are: Blue crab, catfish, clams, cod, flounder/sole, haddock, halibut, lobster, ocean perch, orange roughy, oysters, pollock, rainbow trout, rockfish, salmon (Atlantic/coho/sockeye, chum/pink), scallops, shrimp, swordfish, tilapia, and tuna.

3. Amend § 101.45 by revising the section heading and paragraph (a)(3)(iii) and by adding paragraph (a)(3)(iv) to read as follows:

§ 101.45 What are the guidelines for the voluntary nutrition labeling of raw fruits, vegetables, and fish?

(a) * * *

(3) * * *

(iii) When retailers provide nutrition labeling information for more than one raw fruit or vegetable on signs or posters or in brochures, notebooks, or leaflets, the listings for saturated fat and cholesterol may be omitted from the charts or individual nutrition labels if a footnote states that most fruits and vegetables provide negligible amounts of these nutrients, but that avocados contain 0.5 gram (g) of fat per ounce (e.g., ''Most fruits and vegetables provide negligible amounts of saturated fat and cholesterol; avocados provide 0.5 g of saturated fat per ounce''). The footnote also may contain information about the polyunsaturated and monounsaturated fat content of avocados.

(iv) When retailers provide nutrition labeling information for more than one raw fish on signs or posters or in brochures, notebooks, or leaflets, the listings for dietary fiber and sugars may be omitted from the charts or individual nutrition labels if the following footnote is used, ''Fish provide negligible amounts of dietary fiber and sugars.''

* * * * *

4. Appendixes C and D to part 101 are revised to read as follows:

* * * * *

BILLING CODE 4160–01–S

Appendix C to Part 101.–Nutrition Facts for Raw Fruits and Vegetables

Nutrition facts [1] for raw fruits and vegetables edible portion	Calories	Calories from fat	Total Fat		Saturated Fat		Cholesterol		Sodium		Potassium		Total Carbohydrate		Dietary Fiber		Sugars	Protein	Vitamin A	Vitamin C	Calcium	Iron
			(g)	%DV	(g)	%DV	(mg)	%DV	(mg)	%DV	(mg)	%DV	(g)	%DV	(g)	%DV	(g)	(g)	%DV	%DV	%DV	%DV
Apple, 1 medium (154 g/5.5 oz)	80	0	0	0	0	0	0	0	0	0	170	5	22	7	5	20	16	0	2	8	0	2
Avocado, California, 1/5 medium (30 g/1.1 oz)	50	45	6	9	0.5	3	0	0	0	0	160	5	2	1	1	4	0	1	0	4	0	0
Banana, 1 medium (126 g/4.5 oz)	110	0	0	0	0	0	0	0	0	0	400	11	29	10	4	16	21	1	0	15	0	2
Cantaloupe, 1/4 medium (134g/4.8 oz)	50	0	0	0	0	0	0	0	25	1	280	8	13	4	1	4	12	1	100	80	2	2
Grapefruit, 1/2 medium (154g/5.5 oz)	60	0	0	0	0	0	0	0	0	0	230	7	16	5	6	24	10	1	15	110	2	0
Grapes, 3/4 cup (126 g/4.5 oz)	90	0	0	0	0	0	0	0	15	1	240	7	23	8	1	4	20	0	0	2	2	0
Honeydew Melon, 1/10 medium melon (134 g/4.8 oz)	50	0	0	0	0	0	0	0	35	1	310	9	13	4	1	4	12	1	2	45	0	2
Kiwifruit, 2 medium (148 g/5.3oz)	100	10	1	2	0	0	0	0	0	0	480	14	24	8	4	16	16	2	2	240	6	4
Lemon, 1 medium (58 g/2.1 oz)	15	0	0	0	0	0	0	0	5	0	90	3	5	2	1	4	1	0	0	40	2	0
Lime, 1 medium (67 g/2.4 oz)	20	0	0	0	0	0	0	0	0	0	75	2	7	2	2	8	0	0	0	35	0	0
Nectarine, 1 medium (140 g/5.0 oz)	70	0	0	0	0	0	0	0	0	0	290	8	17	6	1	4	13	1	8	15	0	2
Orange, 1 medium (154 g/5.5 oz)	80	0	0	0	0	0	0	0	0	0	260	7	21	7	7	28	14	1	2	130	6	2
Peach, 1 medium (147 g/5.3 oz)	70	0	0	0	0	0	0	0	0	0	260	7	18	6	2	8	14	1	8	15	0	2
Pear, 1 medium (166 g/5.9 oz)	100	10	1	2	0	0	0	0	0	0	210	6	25	8	4	16	17	1	0	10	2	0
Pineapple, 2 slices, 3" diameter, 3/4" thick (112 g/4 oz)	60	0	0	0	0	0	0	0	10	0	115	3	16	5	1	4	13	1	0	25	2	2
Plums, 2 medium (151 g/5.4 oz)	80	0	0	0	0	0	0	0	0	0	250	7	21	7	2	8	13	1	8	10	0	2
Strawberries, 8 medium (147g/5.3 oz)	50	0	0	0	0	0	0	0	0	0	270	8	12	4	4	16	8	1	0	160	2	4
Sweet cherries, 21 cherries; 1 cup (140 g/5.0 oz)	90	0	0	0	0	0	0	0	0	0	300	9	23	8	3	12	20	2	2	15	2	2
Tangerine, 1 medium (109 g/3.9 oz)	50	5	0.5	1	0	0	0	0	0	0	180	5	13	4	3	12	8	1	0	50	4	0
Watermelon, 1/18 medium melon; 2 cups diced pieces (280 g/10.0 oz)	100	0	0	0	0	0	0	0	10	0	230	7	27	9	2	8	25	1	20	25	2	4

Appendix C to Part 101.—Nutrition Facts for Raw Fruits and Vegetables—Continued

Nutrition facts [1] for raw fruits and vegetables edible portion	Calories	Calories from fat	Total Fat		Saturated Fat		Cholesterol		Sodium		Potassium		Total Carbohydrate		Dietary Fiber		Sugars	Protein	Vitamin A	Vitamin C	Calcium	Iron
			(g)	%DV	(g)	%DV	(mg)	%DV	(mg)	%DV	(mg)	%DV	(g)	%DV	(g)	%DV	(g)	(g)	%DV	%DV	%DV	%DV
Asparagus, 5 spears (93 g/3.3 oz)	20	0	0	0	0	0	0	0	0	0	230	7	4	1	2	8	2	2	10	15	2	2
Bell pepper, 1 medium (148 g/5.3 oz)	30	0	0	0	0	0	0	0	0	0	270	8	7	2	2	8	4	1	8	190	2	2
Broccoli, 1 medium stalk (148 g/5.3 oz)	45	0	0.5	1	0	0	0	0	55	2	540	15	8	3	5	20	3	5	15	220	6	6
Carrot, 1 carrot, 7" long, 1 1/4" diameter (78 g/2.8 oz)	35	0	0	0	0	0	0	0	40	2	280	8	8	3	2	8	5	1	270	10	2	0
Cauliflower, 1/6 medium head (99 g/3.5 oz)	25	0	0	0	0	0	0	0	30	1	270	8	5	2	2	8	2	2	0	100	2	2
Celery, 2 medium stalks (110 g/3.9 oz)	20	0	0	0	0	0	0	0	100	4	350	10	5	2	2	8	1	1	2	15	4	2
Cucumber, 1/3 medium (99 g/3.5 oz)	15	0	0	0	0	0	0	0	0	0	170	5	3	1	1	4	2	1	4	10	2	2
Green (snap) beans, 3/4 cup cut (83 g/3.0 oz)	20	0	0	0	0	0	0	0	0	0	200	6	5	2	3	12	2	1	4	10	4	2
Green cabbage, 1/12 medium head (84 g/ 3.0 oz)	25	0	0	0	0	0	0	0	20	1	190	5	5	2	2	8	3	1	0	70	4	2
Green onion, 1/4 cup chopped (25 g/0.9 oz)	10	0	0	0	0	0	0	0	10	0	70	2	2	1	1	4	1	0	2	8	2	0
Iceberg lettuce, 1/6 medium head (89 g/ 3.2 oz)	15	0	0	0	0	0	0	0	10	0	120	3	3	1	1	4	2	1	4	6	2	2
Leaf lettuce, 1 1/2 cups shredded (85 g/ 3.0 oz)	15	0	0	0	0	0	0	0	30	1	230	7	4	1	2	8	2	1	40	6	4	0
Mushrooms, 5 medium (84 g/3.0 oz)	20	0	0	0	0	0	0	0	0	0	300	9	3	1	1	4	0	3	0	2	0	2
Onion, 1 medium (148 g/5.3 oz)	60	0	0	0	0	0	0	0	5	0	240	7	14	5	3	12	9	2	0	20	4	2
Potato, 1 medium (148 g/5.3 oz)	40	0	0	0	0	0	0	0	10	0	650	19	7	2	4	16	2	3	0	40	2	8
Radishes, 7 radishes (85 g/3.0 oz)	15	0	0	0	0	0	0	0	25	1	230	7	3	1	0	0	2	1	0	30	2	0
Summer squash, 1/2 medium (98 g/3.5oz)	20	0	0	0	0	0	0	0	0	0	260	7	4	1	2	8	2	1	6	30	2	2
Sweet corn, kernels from 1 medium ear (90g/ 3.2 oz)	90	20	2.5	4	0	0	0	0	0	0	250	7	16	5	2	8	5	4	2	10	0	2
Sweet Potato, 1 medium, 5" long, 2"diameter (130 g/ 4.6 oz)	140	0	0	0	0	0	0	0	45	2	340	10	32	11	4	16	7	2	440	30	2	4
Tomato, 1 medium (148 g/5.3 oz)	35	5	0.5	1	0	0	0	0	5	0	360	10	7	2	1	4	4	1	20	40	2	2

[1] Raw, edible weight portion. Percent Daily Values (%DV) are based on a 2,000 calorie diet.

Appendix D to Part 101.–Nutrition Facts for Cooked Fish

Nutrition facts [1] fish (84 g/3 oz)	Calories	Calories from fat	Total Fat		Saturated Fat		Cholesterol		Sodium		Potassium		Total Carbohydrate		Dietary Fiber		Sugars	Protein	Vitamin A	Vitamin C	Calcium	Iron
			(g)	%DV	(g)	%DV	(mg)	%DV	(mg)	%DV	(mg)	%DV	(g)	%DV	(g)	%DV	(g)	(g)	%DV	%DV	%DV	%DV
Blue crab	100	10	1	2	0	0	95	32	330	14	300	9	0	0	0	0	0	20	0	4	10	4
Catfish	130	60	6	9	2	10	50	17	40	2	230	7	0	0	0	0	0	17	0	0	0	0
Clams, about 12 small	110	15	1.5	2	0	0	80	27	95	4	470	13	6	2	0	0	0	17	10	0	8	30
Cod	90	5	1	2	0	0	50	17	55	2	460	13	0	0	0	0	0	20	0	2	2	2
Flounder/sole	100	15	1.5	2	0	0	55	18	100	4	400	11	0	0	0	0	0	19	0	0	0	0
Haddock	100	10	1	2	0	0	70	23	75	3	340	10	0	0	0	0	0	21	2	0	2	6
Halibut	120	15	2	3	0	0	35	12	60	3	500	14	0	0	0	0	0	23	4	0	4	6
Lobster	80	0	0.5	1	0	0	60	20	320	13	300	9	1	0	0	0	0	17	2	0	6	2
Ocean perch	110	20	2	3	0.5	3	50	17	95	4	290	8	0	0	0	0	0	21	0	2	10	6
Orange roughy	80	5	1	2	0	0	20	7	70	3	340	10	0	0	0	0	0	16	2	0	4	2
Oysters, about 12 medium	100	35	4	6	1	5	80	27	300	13	220	6	6	2	0	0	0	10	0	6	6	45
Pollock	100	10	1	2	0	0	80	27	110	5	370	11	0	0	0	0	0	20	2	0	0	2
Rainbow trout	140	50	6	9	2	10	55	18	35	1	370	11	0	0	0	0	0	20	4	4	8	2
Rockfish	100	15	1.5	2	0	0	40	13	70	3	440	13	0	0	0	0	0	21	4	0	2	2
Salmon, Atlantic/Coho/Sockeye	190	90	10	15	2	10	65	22	65	3	320	9	0	0	0	0	0	24	2	2	2	2
Salmon, Chum/Pink	130	35	4	6	1	5	70	23	65	3	420	12	0	0	0	0	0	22	2	0	2	4
Scallops, about 6 large or 14 small	140	10	1	2	0	0	60	20	310	13	430	12	5	2	0	0	0	27	2	6	4	2
Shrimp	100	10	1.5	2	0	0	170	57	250	10	220	6	0	0	0	0	0	21	4	4	6	6
Swordfish	120	50	6	9	1.5	8	40	13	100	4	310	9	0	0	0	0	0	16	2	2	0	4
Tilapia	110	20	2.5	4	1	5	75	25	30	1	360	10	0	0	0	0	0	22	0	2	0	2
Tuna	130	15	1.5	2	0	0	50	17	40	2	480	14	0	0	0	0	0	26	2	2	2	4

[1] Cooked, edible weight portion. Percent Daily Values (%DV) are based on a 2,000 calorie diet.

Dated: December 26, 2001.

Margaret M. Dotzel,

Associate Commissioner for Policy.

[FR Doc. 02–6709 Filed 3–19–02; 8:45 am]

BILLING CODE 4160–01–C

DEPARTMENT OF DEFENSE

Office of the Secretary

32 CFR Part 179

Development of a Munitions Response Site Prioritization Protocol

AGENCY: Office of the Deputy Under Secretary of Defense (Installations & Environment), DoD.

ACTION: Advanced notice of proposed rulemaking.

SUMMARY: In response to Section 311 of the Fiscal Year 2002 National Defense Authorization Act, the Office of the Deputy Under Secretary of Defense (Installations & Environment), U.S. Department of Defense (DoD), announces its intention to develop a proposed site prioritization protocol for assigning to each defense site (hereinafter, munitions response site) a relative priority for response activities related to unexploded ordnance, discarded military munitions, and munitions constituents. Section 311 lists specific factors to be included in the protocol. DoD is requesting input from interested parties on: These factors; any additional factors to consider in developing a site prioritization protocol; how the proposed protocol should incorporate such factors as they relate to safety and environmental hazards; and recommendations on any existing prioritization methods, models, or tools that should be evaluated. DoD will also request comments on the proposed site prioritization protocol when it is available for review later this year.

DATES: Suggestions are requested through May 20, 2002.

ADDRESSES: Written suggestions on factors to consider in the development of the site prioritization protocol should be sent to: United States Department of Defense, Office of the Deputy Under Secretary of Defense (I&E)/CL, ATTN: Proposed Site Prioritization Protocol, 3400 Defense Pentagon, Room 3C765, Washington, DC 20301–3400.

This address must be used when submitting input by U.S. Postal Service Express Mail. Input will also be accepted via electronic e-mail at *https://www.denix.osd.mil/MMRP.*

FOR FURTHER INFORMATION CONTACT: Patricia Ferrebe, 703–695–6107. Information regarding the schedule for developing the proposed site prioritization protocol, along with relevant background information, is available on the DENIX web site at *https://www.denix.osd.mil./MMRP.*

SUPPLEMENTARY INFORMATION: Section 311 of the Fiscal Year 2002 National Defense Authorization Act requires the DoD to develop, in consultation with representatives of the States and Indian Tribes, a proposed and final protocol for assigning to each defense site (munitions response site) a relative priority for response activities based on the overall conditions at each site. Section 311 provides for public notice and comment on the proposed protocol; requires that the proposed protocol be available for public comment on or before November 30, 2002; and directs DoD to issue a final protocol to be applied to defense sites listed in the Department's munitions response site inventory. As an initial step in developing the protocol, DoD seeks public input early in the development process prior to the public's opportunity to review and comment on the proposed protocol in November. DoD will also seek input from State, Tribal, EPA, and Federal Land Managers. DoD will consider this input during development of the proposed protocol.

Based on the requirements above, DoD intends to accomplish the following overall objectives with respect to development of a site prioritization protocol for munitions response sites:

- Prepare, in consultation with the States, and Indian Tribes, a proposed and final protocol per the requirements in Section 311 of the Fiscal Year 2002 National Defense Authorization Act.
- Publish the proposed protocol and provide a formal 60-day public comment period.
- Apply the final protocol to munitions response sites listed on its inventory.

Section 311 lists specific factors that may be considered when assigning a relative priority to munitions response sites. These factors may include:

- Whether there are known, versus suspected, unexploded ordnance, discarded military munitions, or munitions constituents on all or any portion of the defense site and the types of unexploded ordnance, discarded military munitions, or munitions constituents preset or suspected to be present.
- Whether public access to the defense site is controlled, and the effectiveness of these controls.
- The potential for direct human contact with exploded ordnance, discarded military munitions, or munitions constituents at the defense site and evidence of people entering the site.
- Whether a response action has been or is being undertaken at the defense site under the Formerly Used Defense Sites program or other program.
- The planned or mandated dates for transfer of the defense site from military control.
- The extent of any documented incidents involving unexploded ordnance, discarded military munitions, or munitions constituents at or from the defense site, including incidents involving explosions, discoveries, injuries, reports, and investigations.
- The potential for drinking water contamination or the release for munitions constituents into the air.
- The potential for destruction of sensitive echo systems and damage to natural resources. To better understand public concerns with regard to munitions response sites, DoD is soliciting early public input on:
- Additional factors to be considered.
- Existing prioritization methods.
- Other comments for developing the prioritization protocol.

Background

To ensure their readiness to protect and defend our nation, our Military forces conduct live-fire training and testing with weapon systems at ranges throughout the United States. As a result, some properties that DoD has historically used to meet its live-fire training and testing requirements have been found or are suspected to contain unexploded ordnance, discarded military munitions, or munitions constituents. This is the situation on many properties where DoD no longer plans to use military munitions.

DoD's challenge on these munitions response sites is to: (1) Protect human health and the environment; (2) identify where and how much of this material is present at munitions response sites; (3) set priorities for conducting response actions at these sites; and (4) conduct necessary response actions for these sites. To address these and other challenges, DoD is developing a comprehensive program to address munitions—response sites.

Relevant Definitions

Section 311 defines key term that delineate DoD's program to address munitions response sites. These terms are:

''Defense site'' applies to locations that are or were owned by, leased to, or otherwise possessed or used by the Department of Defense. The term does

not include any operational range, operating storage or manufacturing facility, or facility that is used for or was permitted for the treatment or disposal of military munitions.

''Discarded military munitions'' includes military munitions that have been abandoned without proper disposal or removed from storage in a military magazine or other storage area for the purpose of disposal. The term does not include unexploded ordnance, military munitions that are being held for future use or planned disposal, or military munitions that have been properly disposed of, consistent with applicable environmental laws and regulations.

''Military munitions'' consists of all ammunition products and components produced for or used by the armed forces for national defense and security, including ammunition products or components under the control of Department of Defense, the Coast Guard, the Department of Energy, and the National Guard. The term includes confined gaseous, liquid, and solid propellants, explosives, pyrotechnics, chemical and riot control agents, smokes, and incendiaries, including bulk explosive and chemical warfare agents, chemical munitions, rockets, guided and ballistic missiles, bombs, warheads, mortar rounds, artillery ammunition, small arms ammunition, grenades, mines, torpedoes, depth charges, cluster munitions and dispensers, demolition charges, and devices and components thereof. The term does not include wholly inert items, improvised explosive devices, and nuclear weapons, nuclear devices, and nuclear components, except that the term does include nonnuclear components of nuclear devices that are managed under the nuclear weapons program of the Department of Energy after all required sanitization operations under the Atomic Energy Act of 1954 (42 U.S.C. 2011 et seq.) have been completed.

''Munitions constituents'' means any materials originating from unexploded ordnance, discarded military munitions, or other military munitions, including explosive and nonexplosive materials, and emission, degradation, or breakdown elements of such ordnance or munitions.

''Munitions response sites'' means defense sites that contain unexploded ordnance, discarded military munitions, and munitions constituents.

''Unexploded ordnance'' includes military munitions that—

- Have been primed, fused, armed, or otherwise prepared for action;
- Have been fired, dropped, launched, projected, or placed in such a manner as to constitute a hazard to operations, installations, personnel, or material; and
- Remain unexploded either by malfunction, design, or any other cause.

Dated: March 12, 2002.

Patricia L. Toppings,

Alternate OSD Federal Register Liaison Officer, Department of Defense.

[FR Doc. 02–6419 Filed 3–19–02; 8:45 am]

BILLING CODE 5001–08–M

DEPARTMENT OF TRANSPORTATION

Coast Guard

33 CFR Parts 110 and 165

[COTP Honolulu 02–001]

RIN 2115–AA97, 2115–AA98

Anchorages and Security Zones; Oahu, Maui, Hawaii, and Kauai, HI

AGENCY: Coast Guard, DOT.

ACTION: Notice of proposed rulemaking.

SUMMARY: The Coast Guard proposes to establish security zones in designated waters adjacent to the islands of Oahu, Maui, Hawaii, and Kauai, HI for a period of six months. These security zones and a related amendment to regulations for anchorage grounds in Mamala Bay are necessary to protect personnel, vessels, and facilities from acts of sabotage or other subversive acts, accidents, or other causes of a similar nature and will extend from the surface of the water to the ocean floor. This proposed rule is similar to a previous rule published January 31, 2002, creating security zones in these areas until April 19, 2002. Entry into the proposed zones would be prohibited unless authorized by the Coast Guard Captain of the Port Honolulu, HI.

DATES: Comments and related material must reach the Coast Guard on or before April 15, 2002.

ADDRESSES: You may mail comments and related material to Commanding Officer, U.S. Coast Guard Marine Safety Office Honolulu, 433 Ala Moana Blvd., Honolulu, Hawaii 96813. Marine Safety Office Honolulu maintains the public docket for this rulemaking. Comments and material received from the public, as well as documents indicated in this preamble as being available in the docket, will become part of this docket and will be available for inspection or copying at Marine Safety Office Honolulu between 7 a.m. and 4:30 p.m., Monday through Friday, except Federal holidays.

FOR FURTHER INFORMATION CONTACT: LTJG E. G. Cantwell, U. S. Coast Guard Marine Safety Office Honolulu, Hawaii at (808) 522–8260.

SUPPLEMENTARY INFORMATION:

Request for Comments

We encourage you to participate in this rulemaking by submitting comments and related material. If you do so, please include your name and address, identify the docket number for this rulemaking (COTP Honolulu 02–001), indicate the specific section of this document to which each comment applies, and give the reason for each comment. Please submit all comments and related material in an unbound format, no larger than 8½ by 11 inches, suitable for copying. If you would like to know your submission reached us, please enclose a stamped, self-addressed postcard or envelope. We will consider all comments and material received during the comment period. We may change this proposed rule in view of them.

The deadline to submit comments is less than sixty days from the publication of the notice of proposed rules (NPRM) in the **Federal Register**. This short comment period will permit the Coast Guard to publish a temporary final rule before the expiration of the existing temporary security zone, and thus help ensure public safety and security. To provide additional notice, we will place a notice of our proposed rule in the local notice to mariners. You may request a copy of this notice via facsimile by calling (808) 522–8260.

In our final rule, we will include a concise general statement of comments received and identify any changes from the proposed rule based on the comments. If, as we expect, we will make the final rule effective in less than 30 days after publication in the **Federal Register**, we will explain our good cause for doing so as required by 5 U.S.C. 553(d)(3).

Public Meeting

We do not now plan to hold a public meeting. But you may submit a request for a meeting by writing to Marine Safety Office Honolulu at the address under **ADDRESSES** explaining why one would be beneficial. If we determine that one would aid this rulemaking, we will hold one at a time and place announced by a separate notice in the **Federal Register**.

Background and Purpose

Recent terrorist incidents in New York and Washington, D.C. have called for the implementation of additional measures to protect national security.

National security and intelligence officials warn that future terrorist attacks against civilian targets may be anticipated. This proposed rule is similar to a rule published January 31, 2002 (67 FR 4656), creating security zones in these areas until April 19, 2002.

Discussion of Proposed Rule

The Coast Guard proposes designated security zones in the waters adjacent to the islands of Oahu, Maui, Hawaii, and Kauai, HI for a period of six-months. These security zones are necessary to protect personnel, vessels, and facilities from acts of sabotage or other subversive acts, accidents, or other causes of a similar nature. In addition to creating security zones, this proposed rule would also amend an anchorage grounds regulation by adding the requirement that permission of the Captain of the Port be obtained before entering anchorage grounds in Mamala Bay.

These proposed security zones extend from the surface of the water to the ocean floor.

Entry into these zones is prohibited unless authorized by the Coast Guard Captain of the Port Honolulu, HI. Representatives of the Captain of the Port Honolulu will enforce these security zones. The Captain of the Port may be assisted by other federal or state agencies. Periodically, by Broadcast Notice to Mariners, the Coast Guard will announce the existence or status of the temporary security zones in this proposed rule.

These temporary proposed security zones are intended to provide for the safety and security of the public, maritime commerce, and transportation, by creating security zones in designated harbors, anchorages, facilities, and adjacent navigable waters of the United States.

Regulatory Evaluation

This proposed rule is not a ''significant regulatory action'' under section 3(f) of Executive Order 12866, Regulatory Planning and Review, and does not require an assessment of potential costs and benefits under section 6(a)(3) of that Order. The Office of Management and Budget has not reviewed it under that Order. It is not ''significant'' under the regulatory policies and procedures of the Department of Transportation (DOT)(44 FR 11040, February 26, 1979).

The Coast Guard expects the economic impact of this proposed rule to be so minimal that a full Regulatory Evaluation under paragraph 10e of the regulatory policies and procedures of DOT is unnecessary. This expectation is based on the short duration of the zone and the limited geographic zone affected by it.

Small Entities

Under the Regulatory Flexibility Act (5 U.S.C. 601–612), we have considered whether this proposed rule would have a significant economic impact on a substantial number of small entities. The term ''small entities'' comprises small businesses, not-for-profit organizations that are independently owned and operated and are not dominant in their fields, and governmental jurisdictions with populations of less than 50,000.

The Coast Guard certifies under 5 U.S.C. 605(b) that this proposed rule would not have a significant economic impact on a substantial number of small entities. No small business impacts are anticipated due to the small size of the zones and the short duration of the security zones in any one area.

If you think that your business, organization, or governmental jurisdiction qualifies as a small entity and that this rule would have a significant economic impact on it, please submit a comment (see **ADDRESSES**) explaining why you think it qualifies and how and to what degree this rule would economically affect it.

Assistance for Small Entities

Because we did not anticipate any small business impacts, we did not offer assistance to small entities in understanding the rule.

Collection of Information

This proposed rule would call for no new collection of information under the Paperwork Reduction Act of 1995 (44 U.S.C. 3501–3520).

Federalism

A rule has implications for federalism under Executive Order 13132, Federalism, if it has a substantial direct effect on State or local governments and would either preempt State law or impose a substantial direct cost of compliance on them. We have analyzed this proposed rule under that Order and have determined that it does not have implications for federalism.

Unfunded Mandates Reform Act

The Unfunded Mandates Reform Act of 1995 (2 U.S.C. 1531–1538) requires Federal agencies to assess the effects of their discretionary regulatory actions. In particular, the Act addresses actions that may result in the expenditure by a State, local, or tribal government, in the aggregate, or by the private sector of $100,000,000 or more in any one year. Though this proposed rule would not result in such an expenditure, we do discuss the effects of this rule elsewhere in this preamble.

Taking of Private Property

This proposed rule would not affect a taking of private property or otherwise have taking implications under Executive Order 12630, Governmental Actions and Interference with Constitutionally Protected Property Rights.

Civil Justice Reform

This proposed rule meets applicable standards in sections 3(a) and 3(b)(2) of Executive Order 12988, Civil Justice Reform, to minimize litigation, eliminate ambiguity, and reduce burden.

Protection of Children

We have analyzed this proposed rule under Executive Order 13045, Protection of Children from Environmental Health Risks and Safety Risks. This rule is not an economically significant rule and would not create an environmental risk to health or risk to safety that might disproportionately affect children.

Indian Tribal Governments

This proposed rule does not have tribal implications under Executive Order 13175, Consultation and Coordination with Indian Tribal Governments, because it would not have a substantial direct effect on one or more Indian tribes, on the relationship between the Federal Government and Indian tribes, or on the distribution of power and responsibilities between the Federal Government and Indian tribes. We invite your comments on how this proposed rule might impact tribal governments, even if that impact may not constitute a ''tribal implication'' under the Order.

Energy Effects

We have analyzed this proposed rule under Executive Order 13211, Actions Concerning Regulations That Significantly Affect Energy Supply, Distribution, or Use. We have determined that it is not a ''significant energy action'' under that order because it is not a ''significant regulatory action'' under Executive Order 12866 and is not likely to have a significant adverse effect on the supply, distribution, or use of energy. It has not been designated by the Administrator of the Office of Information and Regulatory Affairs as a significant energy action. Therefore, it

does not require a Statement of Energy Effects under Executive Order 13211.

Environment

We have considered the environmental impact of this proposed rule and concluded that, under figure 2–1, paragraph (34)(g), of Commandant Instruction M16475.lD, this rule is categorically excluded from further environmental documentation. A ''Categorical Exclusion Determination'' is available in the docket where indicated under **ADDRESSES.**

List of Subjects

33 CFR Part 110

Anchorage grounds.

33 CFR Part 165

Harbors, Marine safety, Navigation (water), Reports and recordkeeping requirements, Security measures, Waterways.

For the reasons set out in the preamble, the Coast Guard amends 33 CFR parts 110 and 165 as follows:

PART 110—ANCHORAGE REGULATIONS

1. The authority citation for part 110 continues to read as follows:

Authority: 33 U.S.C. 471, 1221 through 1236, 2030, 2035, 2071; 49 CFR 1.46 and 33 CFR 1.05–1(g).

2. From 6 a.m. April 19, 2002, until 4 p.m. October 19, 2002, in § 110.235 add a new paragraph (c) to read as follows:

§ 110.235 Pacific Ocean (Mamala Bay), Honolulu Harbor, Hawaii (Datum: NAD 83).

* * * * *

(c) Before entering in the anchorage grounds in this section you must first obtain permission from the Captain of the Port Honolulu.

PART 165—REGULATED NAVIGATION AREAS AND LIMITED ACCESS AREAS

3. The authority citation for part 165 continues to read as follows:

Authority: 33 U.S.C. 1231; 50 U.S.C. 191, 33 CFR 1.05–1(g), 6.04–1, 6.04–6, 160.5; 49 CFR 1.46.

4. A new § 165.T14–069 is temporarily added to read as follows:

§ 165.T14–069 Security Zones; Oahu, Maui, Hawaii, and Kauai, HI.

(a) *Location.* The following areas are security zones:

(1) All waters of Honolulu Harbor and entrance channel, Keehi Lagoon, and General Anchorages A, B, C, and D as defined in 33 CFR 110.235 that are shoreward of the following coordinates: The shoreline at 21°17.68′ N, 157°52.0′ W; thence due south to 21°16.0′ N, 157°52.0′ W, thence due west to 21°16.0′ N, 157°55.58′ W, thence due north to Honolulu International Airport Reef Runway at 21°18.25′ N, 157°55.58′ W.

(2) The waters around the Tesoro Single Point Mooring extending 1,000 yards in all directions from position 21°16.2′ N, 158°05.3′ W.

(3) The waters extending 1,000 yards in all directions around vessels moored at the Chevron Conventional Buoy Mooring at approximate position 21°16.7′ N, 158°04.2′ W.

(4) The Kahului Harbor and Entrance Channel, Maui, HI consisting of all waters shoreward of the COLREGS DEMARCATION line. (See 33 CFR 80.1460).

(5) All waters within the Nawiliwili Harbor, Kauai, HI shoreward of the COLREGS DEMARCATION line (See 33 CFR 80.1450).

(6) All waters of Port Allen Harbor, Kauai, HI shoreward of the COLREGS DEMARCATION line (See 33 CFR 80.1440).

(7) Hilo Harbor and Entrance Channel, Hawaii, HI consisting of all waters shoreward of the COLREGS DEMARCATION line (See 33 CFR 80.1480).

(8) The waters extending out 500 yards in all directions from cruise ship vessels anchored within 3 miles of:

(i) Lahaina Small Boat Harbor, Maui, between Makila Point and Puunoa Point.

(ii) Kailua-Kona Small Boat Harbor, Hawaii, between Keahulolu Point and Puapuaa Point.

(9) All waters contained within the Barbers Point Harbor, Oahu, enclosed by a line drawn between Harbor Entrance Channel Light 6 and the jetty point day beacon at 21°19.5 N, 158°07.3 W.

(b) *Designated representative.* A designated representative of the Captain of the Port is any Coast Guard commissioned officer, warrant or petty officer that has been authorized by the Captain of the Port Honolulu to act on his behalf. The following officers have or will be designated by the Captain of the Port Honolulu: The senior Coast Guard boarding officer on each vessel enforcing the security zone.

(c) *Regulations.* (1) In accordance with § 165.33, entry into these zones is prohibited unless authorized by the Coast Guard Captain of the Port, Honolulu or his designated representatives. Section 165.33 also contains other general requirements.

(2) The existence or status of the temporary security zones in this section will be announced periodically by Broadcast Notice to Mariners.

(3) Persons desiring to transit the areas of the security zones may contact the Captain of the Port at command center telephone number (808) 541–2477 or on VHF channel 16 (156.8 Mhz) to seek permission to transit the area. If permission is granted, all persons and vessels shall comply with the instructions of the Captain of the Port or his designated representatives.

(d) *Authority.* In addition to 33 U.S.C. 1231, the authority for this section is 33 U.S.C. 1226; 49 CFR 1.46.

(e) *Effective dates.* This section is effective from 6 a.m. HST April 19, 2002, until 4 p.m. HST October 19, 2002.

Dated: March 12, 2002.

T.L. Rice,

Captain, U.S. Coast Guard, Commander, Fourteenth Coast Guard District, Acting.

[FR Doc. 02–6733 Filed 3–15–02; 4:10 pm]

BILLING CODE 4910–15–U

DEPARTMENT OF TRANSPORTATION

Coast Guard

33 CFR Part 165

[PAC AREA–02–001]

RIN 2115–AG23

Protection of Naval Vessels

AGENCY: Coast Guard, DOT.

ACTION: Notice of proposed rulemaking.

SUMMARY: The Coast Guard proposes regulations for the safety and security of U.S. naval vessels in the navigable waters of the United States. Naval Vessel Protection Zones will provide for the regulation of vessel traffic in the vicinity of many U.S. naval vessels in the navigable waters of the United States.

DATES: Comments and related material must reach the Coast Guard on or before May 6, 2002.

ADDRESSES: You may mail comments and related material to Commander (Pmt), Coast Guard Pacific Area, Coast Guard Island, Bldg. 50–6, Alameda, CA 94501–5100. Commander (Pmt) maintains the public docket for this rulemaking. Comments and material received from the public, as well as documents indicated in this preamble as being available in the docket, are part of docket [PAC AREA 02–001] and are available for inspection or copying at Commander (Pmt), at the address listed above between 9 a.m. and 3 p.m., Monday through Friday, except Federal holidays.

FOR FURTHER INFORMATION CONTACT: Commander Steve Danscuk,

Commander (Pmt), Coast Guard Island, Bldg. 50–6, Alameda, CA 94501–5100; telephone number (510) 437–2943.

SUPPLEMENTARY INFORMATION:

Request for Comments

We encourage you to participate in this rulemaking by submitting comments and related material. If you do so, please include your name and address, identify the docket number for this rulemaking [PAC AREA 02–001], indicate the specific section of this document to which each comment applies, and give the reason for each comment. Please submit all comments and related material in an unbound format, no larger than 8½ by 11 inches, suitable for copying. If you would like to know they reached us, please enclose a stamped, self-addressed postcard or envelope. We will consider all comments and material received during the comment period. We may change this proposed rule in view of them.

Public Meeting

We do not now plan to hold a public meeting. But you may submit a request for a meeting by writing to Commander (Pmt), Coast Guard Pacific Area, at the address under **ADDRESSES** explaining why one would be beneficial. If we determine that one would aid this rulemaking, we will hold one at a time and place announced by a later notice in the **Federal Register**.

Background and Purpose

These zones are necessary to provide for the safety and security of United States naval vessels in the navigable waters of the United States. The regulations are issued under the authority contained in 14 U.S.C. 91. On September 21, 2001, the Coast Guard published temporary final rules entitled ''Protection of Naval Vessels'' in the **Federal Register** (66 FR 48779). Prior to issuing this temporary final rule, no regulation existed implementing 14 U.S.C. 91. The temporary final rule is in effect until June 15, 2002. No public hearing has been requested, and none has been held.

On February 21, 2002, Commander (Amr), Coast Guard Atlantic Area published a Notice of Proposed Rulemaking in the **Federal Register** (67 FR 7992) proposing to establish a permanent Subpart G to 33 CFR part 165 and setting out general provisions pertaining to that subpart. The general provisions of proposed Subpart G are discussed in the preamble to the Atlantic Area proposed rule and would apply to Pacific Area NVPZs. Our proposed rule would only add a new § 165.2030 to parallel Atlantic Area's proposed § 165.2025.

We have determined that a continuing need exists for the protection of naval vessels. Therefore, we are proposing a permanent rule that will replace the temporary rule by June 15, 2002. Based on our experience with the temporary final rule, we have made some changes that are detailed at length in the ''Discussion'' section of this preamble.

Discussion of Proposed Rule

This proposed rule, for safety and security concerns, controls vessel movement in a regulated area surrounding many U.S. naval vessels. All vessels within 500 yards of such a U.S. naval vessel shall operate at the minimum speed necessary to maintain a safe course, unless required by the Navigation Rules to maintain speed, and shall always proceed as directed by the Coast Guard, the senior naval officer present in command, or the official patrol. No vessel or person is allowed within 100 yards of a U.S. naval vessel greater than 100 feet in length unless authorized by the Coast Guard, the senior naval officer present in command, or the official patrol.

Only larger U.S. naval vessels are surrounded by a naval vessel protection zone to minimize this rule's effect on the public. Only U.S. naval vessels over 100 feet in length overall would be ''large U.S. naval vessels.''

The proposed rule contains several additional provisions to limit public impact. Vessels that need to pass within 100 yards of a large U.S. naval vessel may contact the Coast Guard, the senior naval officer present in command, or the official patrol on VHF–FM channel 16 to obtain the necessary permission.

Additionally, the Coast Guard, senior naval officer present in command, or the official patrol should permit vessels constrained by their navigational draft or restricted in their ability to maneuver to pass within 100 yards of a large U.S. naval vessel in order to ensure a safe passage in accordance with the Navigation Rules.

Similarly, commercial vessels anchored in a designated anchorage area should be permitted to remain at anchor within 100 yards of a passing large U.S. naval vessel when consistent with security requirements. As illustrated by the attack on the U.S.S. Cole, all vessels are potentially a security threat; therefore, vessels may, at times, be required to move. From a pure security perspective, all anchored vessels should be required to move. We believe, however, that security must be balanced with the burden on mariners and encourage enforcement officials to limit the impact on larger vessels, which are the most expensive and difficult to move.

In the proposed rule, we added language to address the situation where a naval vessel protection zone around a moored or anchored U.S. naval vessel effectively shuts down a narrow waterway. This situation could arise when a U.S. naval vessel makes a temporary port visit away from its normal homeport. In this situation, the Coast Guard, senior naval officer present in command, or the official patrol should permit transiting vessels to pass within 100 yards of the moored U.S. naval vessel with the minimal delay consistent with security requirements. This proposed rule does not intend to block narrow waterways from public use for extended periods of time. Mariners should anticipate some delay due to security needs. However, by including this new language in the regulation text, we want to make it clear that the Coast Guard, senior naval officer present in command, or the official patrol should, when appropriate, allow transiting vessels within the 100-yard exclusionary zone as needed to safely pass through a navigable channel or waterway. While maintaining security is paramount, avoiding extended delays in normal traffic is also very important.

We also added language that the Coast Guard, senior naval officer present in command, or the official patrol should give advance notice on VHF–FM channel 16 of all movements by large U.S. naval vessels once security concerns permit publicizing the movement. The goal is to give as much advance notice as possible. In most cases, however, this notice will probably be no more than an hour or two. These notifications should, to some extent, help mariners adjust their navigation plans accordingly or obtain early permission to enter into a naval vessel protection zone.

Violations of these regulations are punishable as a class D felony (imprisonment for not more than 6 years and a fine of not more than $250,000), a civil penalty, and may result in rem liability against the vessel.

Regulatory Evaluation

This proposed rule is not a ''significant regulatory action'' under section 3(f) of Executive Order 12866, Regulatory Planning and Review, and does not require an assessment of potential costs and benefits under section 6(a)(3) of that Order. The Office of Management and Budget has not reviewed it under that Order. It is not ''significant'' under the regulatory

policies and procedures of the Department of Transportation (DOT) (44 FR 11040, February 26, 1979).

We expect the economic impact of this proposed rule to be so minimal that a full Regulatory Evaluation under paragraph 10e of the regulatory policies and procedures of DOT is unnecessary.

Although this proposed regulation restricts access to the regulated area, the effect of this proposed regulation will not be significant because: (i) Individual naval vessel protection zones are limited in size; (ii) the Coast Guard, senior naval officer present in command, or official patrol may authorize access to the naval vessel protection zone; (iii) the naval vessel protection zone for any given transiting naval vessel will only effect a given geographical location for a limited time; and (iv) when conditions permit, the Coast Guard, senior naval officer present in command, or the official patrol should give advance notice of all naval vessel movements on VHF–FM channel 16 so mariners can adjust their plans accordingly. Further, the Coast Guard received no comments related to economic impact following implementation of the temporary final rule.

Small Entities

Under the Regulatory Flexibility Act (5 U.S.C. 601–612), we have considered whether this proposed rule would have a significant economic impact on a substantial number of small entities. The term ''small entities'' comprises small businesses, not-for-profit organizations that are independently owned and operated and are not dominant in their fields, and governmental jurisdictions with populations of less than 50,000.

The Coast Guard certifies under 5 U.S.C. 605(b) that this proposed rule will not have a significant economic impact on a substantial number of small entities.

This proposed rule will affect the following entities, some of which may be small entities: The owners or operators of vessels intending to operate near or anchor in the vicinity of U.S. naval vessels in the navigable waters of the United States.

This proposed regulation will not have a significant economic impact on a substantial number of small entities for the following reasons: (i) Individual naval vessel protection zones are limited in size; (ii) the official patrol may authorize access to the naval vessel protection zone; (iii) the naval vessel protection zone for any given transiting naval vessel will only affect a given geographic location for a limited time; and (iv) when conditions permit, the Coast Guard, senior naval officer present in command, or the official patrol should give advance notice of all naval vessel movements on VHF–FM channel 16 so mariners can adjust their plans accordingly. Further, the Coast Guard received no comments related to small entity impact following implementation of the temporary final rule.

If you think that your business, organization, or governmental jurisdiction qualifies as a small entity and that this rule would have a significant economic impact on it, please submit a comment (*see* **ADDRESSES**) explaining why you think it qualifies and how and to what degree this rule would economically affect it.

Assistance for Small Entities

Under section 213(a) of the Small Business Regulatory Enforcement Fairness Act of 1996 (Pub. L. 104–121), we want to assist small entities in understanding this proposed rule so that they can better evaluate its effects on them and participate in the rulemaking. If the rule would affect your small business, organization, or governmental jurisdiction and you have questions concerning its provisions or options for compliance, please contact the address listed under **ADDRESSES**.

Collection of Information

This proposed rule calls for no new collection of information under the Paperwork Reduction Act of 1995 (44 U.S.C. 3501–3520).

Unfunded Mandates Reform Act

The Unfunded Mandates Reform Act of 1995 (2 U.S.C. 1531–1538) requires Federal agencies to assess the effects of their discretionary regulatory actions. In particular, the Act addresses actions that may result in the expenditure by a State, local, or tribal government, in the aggregate, or by the private sector of $100,000,000 or more in any one year. Though this proposed rule will not result in such an expenditure, we do discuss the effects of this rule elsewhere in this preamble.

Taking of Private Property

This proposed rule will not effect a taking of private property or otherwise have taking implications under Executive Order 12630, Governmental Actions and Interference with Constitutionally Protected Property Rights.

Civil Justice Reform

This proposed rule meets applicable standards in sections 3(a) and 3(b)(2) of Executive Order 12988, Civil Justice Reform, to minimize litigation, eliminate ambiguity, and reduce burden.

Protection of Children

We have analyzed this proposed rule under Executive Order 13045, Protection of Children from Environmental Health Risks and Safety Risks. This rule is not an economically significant rule and does not create an environmental risk to health or risk to safety that may disproportionately affect children.

Indian Tribal Governments

This proposed rule does not have tribal implications under Executive Order 13175, Consultation and Coordination with Indian Tribal Governments, because it would not have a substantial direct effect on one or more Indian tribes, on the relationship between the Federal Government and Indian tribes, or on the distribution of power and responsibilities between the Federal Government and Indian tribes.

To help the Coast Guard establish regular and meaningful consultation and collaboration with Indian and Alaskan Native tribes, we published a notice in the **Federal Register** (66 FR 36361, July 11, 2001) requesting comments on how to best carry out the Order. We invite your comments on how this proposed rule might impact tribal governments, even if that impact may not constitute a ''tribal implication'' under the Order.

Energy Effects

We have analyzed this proposed rule under Executive Order 13211, Actions Concerning Regulations That Significantly Affect Energy Supply, Distribution, or Use. We have determined that it is not a ''significant energy action'' under that order because it is not a ''significant regulatory action'' under Executive Order 12866 and is not likely to have a significant adverse effect on the supply, distribution, or use of energy. It has not been designated by the Administrator of the Office of Information and Regulatory Affairs as a significant energy action. Therefore, it does not require a Statement of Energy Effects under Executive Order 13211.

Environment

We have considered the environmental impact of this proposed rule and concluded that, under figure 2–1, paragraph (34)(g), of Commandant Instruction M16475.lD, this rule is categorically excluded from further environmental documentation. A ''Categorical Exclusion Determination'' is available in the docket where

indicated under **ADDRESSES.** Further, the Coast Guard received no comments related to environmental impact following implementation of the temporary final rule.

List of Subjects in 33 CFR part 165

Harbors, Marine safety, Navigation (water), Protection of naval vessels, Reporting and recordkeeping requirements, Security measures, Waterways.

For the reasons discussed in the preamble, the Coast Guard proposes to amend 33 CFR part 165 as follows:

PART 165—REGULATED NAVIGATION AREAS AND LIMITED ACCESS AREAS

SUBPART G—PROTECTION OF NAVAL VESSELS

1. The authority citation for part 165 subpart G continues to read as follows:

Authority: 14 U.S.C 91 and 633; 49 CFR 1.45.

2. Add § 165.2030 to read as follows:

§ 165.2030 Pacific Area.

(a) This section applies to any vessel or person in the navigable waters of the United States within the boundaries of the U.S. Coast Guard Pacific Area, which includes the Eleventh, Thirteenth, Fourteenth, and Seventeenth U.S. Coast Guard Districts.

Note to paragraph (a): The boundaries of the U.S. Coast Guard Pacific Area and the Eleventh, Thirteenth, Fourteenth, and Seventeenth U.S. Coast Guard Districts are set out in 33 CFR part 3.

(b) A naval vessel protection zone exists around U.S. naval vessels greater than 100 feet in length overall at all times in the navigable waters of the United States, whether the large U.S. naval vessel is underway, anchored, moored, or within a floating drydock, except when the large naval vessel is moored or anchored within a restricted area or within a naval defensive sea area.

(c) The Navigation Rules shall apply at all times within a naval vessel protection zone.

(d) When within a naval vessel protection zone, all vessels shall operate at the minimum speed necessary to maintain a safe course, unless required to maintain speed by the Navigation Rules, and shall proceed as directed by the Coast Guard, the senior naval officer present in command, or the official patrol. When within a naval vessel protection zone, no vessel or person is allowed within 100 yards of a large U.S. naval vessel unless authorized by the Coast Guard, the senior naval officer present in command, or official patrol.

(e) To request authorization to operate within 100 yards of a large U.S. naval vessel, contact the Coast Guard, the senior naval officer present in command, or the official patrol on VHF–FM channel 16.

(f) When conditions permit, the Coast Guard, senior naval officer present in command, or the official patrol should:

(1) give advance notice on VHF–FM channel 16 of all large U.S. naval vessel movements; and

(2) permit vessels constrained by their navigational draft or restricted in their ability to maneuver to pass within 100 yards of a large U.S. naval vessel in order to ensure a safe passage in accordance with the Navigation Rules; and

(3) permit commercial vessels anchored in a designated anchorage area to remain at anchor when within 100 yards of passing large U.S. naval vessels; and

(4) permit vessels that must transit via a navigable channel or waterway to pass within 100 yards of a moored or anchored large U.S. naval vessel with minimal delay consistent with security.

Note to paragraph (f): The listed actions are discretionary and do not create any additional right to appeal or otherwise dispute a decision of the Coast Guard, the senior naval officer present in command, or the official patrol.

Dated: March 12, 2002.

E.R. Riutta,

Vice Admiral, U.S. Coast Guard, Commander, Eleventh Coast Guard District.

[FR Doc. 02–6766 Filed 3–19–02; 8:45 am]

BILLING CODE 4910–15–P

DEPARTMENT OF TRANSPORTATION

Coast Guard

33 CFR Part 165

[CGD01–02–006]

RIN 2115–AA97

Safety Zone; Mystic Places Offshore Grand Prix, New London, CT

AGENCY: Coast Guard, DOT.

ACTION: Notice of proposed rulemaking.

SUMMARY: The Coast Guard proposes to establish a temporary safety zone for the Mystic Places Offshore Grand Prix, off Ocean Beach, New London, CT. This action is necessary to provide for the safety of life on navigable waters during this May 3-to-5, 2002 event. This action is intended to restrict vessel traffic in a portion of Long Island Sound in the vicinity of Ocean Beach, New London, CT.

DATES: Comments and related material must reach the Coast Guard on or before April 19, 2002.

ADDRESSES: You may mail comments and related material to Marine Events, Coast Guard Group/Marine Safety Office Long Island Sound, Command Center, 120 Woodward Ave., New Haven, CT 06512. Coast Guard Group/Marine Safety Office Long Island Sound maintains the public docket for this rulemaking. Comments and material received from the public, as well as documents indicated in this preamble as being available in the docket, will become part of this docket and will be available for inspection or copying at Group/MSO Long Island Sound, New Haven, CT, between 7:30 a.m. and 4:00 p.m., Monday through Friday, except Federal holidays.

FOR FURTHER INFORMATION CONTACT: Boatswain's Mate Second Class (BM2) Ryan Peebles, Group Operations Petty Officer, Coast Guard Group/MSO Long Island Sound (203) 468–4408.

SUPPLEMENTARY INFORMATION:

Request for Comments

We encourage you to participate in this rulemaking by submitting comments and related material. If you do so, please include your name and address, identify the docket number for this rulemaking (CGD01–02–006), indicate the specific section of this document to which each comment applies, and give the reason for each comment. Please submit all comments and related material in an unbound format, no larger than 8½ by 11 inches, suitable for copying. If you would like to know they reached us, please enclose a stamped, self-addressed postcard or envelope. We will consider all comments and material received during the comment period. We may change this proposed rule in view of them.

Public Meeting

We do not now plan to hold a public meeting, but you may submit a request for a meeting by writing to Coast Guard Group/MSO Long Island Sound at the address under **ADDRESSES** explaining why one would be beneficial. If we determine that one would aid this rulemaking, we will hold one at a time and place announced by a later notice in the **Federal Register**.

Background and Purpose

The Coast Guard proposes to establish a temporary safety zone for the Mystic Places Offshore Grand Prix off Ocean Beach in Long Island Sound. The proposed safety zone prevents vessels from transiting a portion of Long Island

Sound. It is needed to protect boaters from the hazards associated with power boat races being conducted within the boundaries of the safety zone.

The comment period was abbreviated in order to allow for the promulgation of a temporary rule in advance of the scheduled power boat races. The proposed rule is unlikely to engender public controversy. The safety zone encompasses a modest area and is of limited duration. Our previous rulemaking experience in cases of a similar nature suggests that we are unlikely to receive any adverse comments.

Discussion of Proposed Rule

The proposed safety zone encompasses all waters of Long Island Sound within the boundaries of a line beginning at 41°18′00″ N, 072°05′58″ W; then to 41°18′20″ N, 072°05′40″ W; then to 41°18′20″ N, 072°04′58″ W; then to 41°18′00″ N, 072°04′58″ W (NAD 1983); and then returning to the point of origin. The proposed safety zone will be enforced from 1 p.m. until 3 p.m. each day from May 3, 2002 through May 5, 2002. Only race officials and participants will be allowed inside the boundaries of the proposed zone during these periods. All other marine traffic will be allowed to transit around the safety zone at all times. Vessels will not be precluded from mooring at or getting underway from recreational or commercial piers in the vicinity of the zone. No vessel may enter the safety zone without permission from the Captain of the Port, Long Island Sound.

Regulatory Evaluation

This proposed rule is not a ''significant regulatory action'' under section 3(f) of Executive Order 12866, Regulatory planning and review, and does not require an assessment of potential costs and benefits under section 6(a)(3) of that Order. The Office of Management and Budget has not reviewed it under that Order. It is not ''significant'' under the regulatory policies and procedures of the Department of Transportation (DOT) (44 FR 11040, February 26, 1979).

We expect the economic impact of this proposed rule to be so minimal that a full Regulatory Evaluation under paragraph 10e of the regulatory policies and procedures of DOT is unnecessary. This proposed safety zone would temporarily close a portion of Long Island Sound to vessel traffic. However, the impact of this regulation is expected to be minimal for the following reasons: the event is of limited duration; vessels are not precluded from getting underway, or mooring at, public or private facilities in the vicinity of the event; advance advisories will be made to the maritime community; and marine traffic may still transit around the zone during the event.

Small Entities

Under the Regulatory Flexibility Act (5 U.S.C. 601–612), we considered whether this proposed rule would have a significant economic impact on a substantial number of small entities. The term ''small entities'' comprises small businesses, not-for-profit organizations that are independently owned and operated and are not dominant in their fields, and governmental jurisdictions with populations of less than 50,000.

The Coast Guard certifies under 5 U.S.C. 605(b) that this proposed rule would not have a significant economic impact on a substantial number of small entities. This proposed rule would affect the following entities, some of which might be small entities: the owners or operators of vessels intending to transit or anchor in a portion of Long Island Sound during the time this zone is activated. This safety zone would not have a significant economic impact on a substantial number of small entities for the following reasons: the event is of limited duration; vessels are not precluded from getting underway, or mooring at, public or private facilities in the vicinity of the event; advance advisories will be made to the maritime community; and marine traffic may still transit around the zone during the event.

If you think that your business, organization, or governmental jurisdiction qualifies as a small entity and that this rule would have a significant economic impact on it, please submit a comment (*see* **ADDRESSES**) explaining why you think it qualifies and how and to what degree this rule would economically affect it.

Assistance for Small Entities

Under section 213(a) of the Small Business Regulatory Enforcement Fairness Act of 1996 (Public Law 104–121), we want to assist small entities in understanding this proposed rule so that they can better evaluate its effects on them and participate in the rulemaking. If the rule would affect your small business, organization, or governmental jurisdiction and you have questions concerning its provisions or options for compliance, please contact BM2 Ryan Peebles, Operations Petty Officer, Coast Guard Group/MSO Long Island Sound (203) 468–4408.

Collection of Information

This proposed rule would call for no new collection of information under the Paperwork Reduction Act of 1995 (44 U.S.C. 3501–3520).

Federalism

A rule has implications for federalism under Executive Order 13132, Federalism, if it has a substantial direct effect on State or local governments and would either preempt State law or impose a substantial direct cost of compliance on them. We have analyzed this proposed rule under that Order and have determined that it does not have implications for federalism.

Unfunded Mandates Reform Act

The Unfunded Mandates Reform Act of 1995 (2 U.S.C. 1531–1538) requires Federal agencies to assess the effects of their discretionary regulatory actions. In particular, the Act addresses actions that may result in the expenditure by a State, local, or tribal government, in the aggregate, or by the private sector of $100,000,000 or more in any one year. Though this proposed rule would not result in such an expenditure, we do discuss the effects of this rule elsewhere in this preamble.

Taking of Private Property

This proposed rule would not effect a taking of private property or otherwise have taking implications under Executive Order 12630, Governmental Actions and Interference with Constitutionally Protected Property Rights.

Civil Justice Reform

This proposed rule meets applicable standards in sections 3(a) and 3(b)(2) of Executive Order 12988, Civil Justice Reform, to minimize litigation, eliminate ambiguity, and reduce burden.

Protection of Children

We have analyzed this proposed rule under Executive Order 13045, Protection of Children from Environmental Health Risks and Safety Risks. This rule is not an economically significant rule and would not concern an environmental risk to health or risk to safety that may disproportionately affect children.

Indian Tribal Governments

This proposed rule does not have tribal implications under Executive Order 13175, Consultation and Coordination with Indian Tribal Governments, because it would not have a substantial direct effect on one or more Indian tribes, on the relationship

between the Federal Government and Indian tribes, or on the distribution of power and responsibilities between the Federal Government and Indian tribes.

To help the Coast Guard establish regular and meaningful consultation and collaboration with Indian and Alaskan Native tribes, we published a notice in the **Federal Register** (66 FR 36361, July 11, 2001) requesting comments on how to best carry out the Order. We invite your comments on how this proposed rule might impact tribal governments, even if that impact may not constitute a ''tribal implication'' under the Order.

Energy Effects

We have analyzed this proposed rule under Executive Order 13211, Actions Concerning Regulations That Significantly Affect Energy Supply, Distribution, or Use. We have determined that it is not a ''significant energy action'' under that order because it is not a ''significant regulatory action'' under Executive Order 12866 and is not likely to have a significant adverse effect on the supply, distribution, or use of energy. It has not been designated by the Administrator of the Office of Information and Regulatory Affairs as a significant energy action. Therefore, it does not require a Statement of Energy Effects under Executive Order 13211.

Environment

We considered the environmental impact of this proposed rule and concluded that, under figure 2–1, paragraph 34(g), of Commandant Instruction M16475.1C, this proposed rule is categorically excluded from further environmental documentation. This proposed rule fits paragraph 34(g) as it establishes a safety zone. A ''Categorical Exclusion Determination'' is available in the docket where indicated under **ADDRESSES.**

List of Subjects in 33 CFR Part 165

Harbors, Marine Safety, Navigation (water), Reporting and recordkeeping requirements, Security measures, Waterways.

For the reasons discussed in the preamble, the Coast Guard proposes to amend 33 CFR part 165 as follows:

PART 165—REGULATED NAVIGATION AREAS AND LIMITED ACCESS AREAS

1. The authority citation for part 165 continues to read as follows:

Authority: 33 U.S.C. 1231; 50 U.S.C. 191, 33 CFR 1.05–1(g), 6.04–1, 6.04–6, 160.5; 49 CFR 1.46.

2. From 1 p.m. on May 3, 2002 through 3 p.m. on May 5, 2002, add temporary § 165.T01–006 to read as follows:

§ 165.T01–006 Safety Zone: Mystic Places Offshore Grand Prix, New London, CT.

(a) Location. The following area is a safety zone: All waters off Ocean Beach in Long Island Sound, within the boundaries of a line beginning at 41°18′00″N, 072°05′58″W; then to 41°18′20″N, 072°05′40″W; then to 41°18′20″N, 072°04′58″W; then to 41°18′00″N, 072°04′58″W (NAD 1983); and then returning to the point of origin.

(b) Enforcement period. This section will be enforced from 1 p.m. until 3 p.m. each day from May 3, 2002 through May 5, 2002.

(c) Regulations. (1) Vessels not participating in the event, swimmers and personal watercraft of any nature are prohibited from entering or moving within the safety zone unless authorized by the Captain of the Port. (2) All persons and vessels shall comply with the instructions of the Coast Guard Captain of the Port or the designated on-scene patrol personnel. These personnel comprise commissioned, warrant, and petty officers of the Coast Guard. Upon being hailed by a U. S. Coast Guard vessel by siren, radio, flashing light, or other means, the operator of a vessel shall proceed as directed.

Dated: February 27, 2002.

J.J. Coccia,

Captain, U.S. Coast Guard, Captain of the Port, Long Island Sound.

[FR Doc. 02–6765 Filed 3–19–02; 8:45 am]

BILLING CODE 4910–15–P

DEPARTMENT OF TRANSPORTATION

Coast Guard

33 CFR Part 165

[CGD01–02–026]

RIN 2115–AA97

Safety Zone; Lynn Fourth of July Celebration, Nahant Bay, Lynn, MA

AGENCY: Coast Guard, DOT.

ACTION: Notice of proposed rulemaking.

SUMMARY: The Coast Guard proposes to establish a temporary safety zone for the Lynn Fourth of July Celebration on July 3, 2002, in Lynn, MA. The safety zone would temporarily close all waters of Nahant Bay within a 500-yard radius of the launch platform located in approximate position 42°27′48″ N, 70°55′38″ W. The safety zone would prohibit entry into or movement within this portion Nahant Bay during the fireworks display.

DATES: Comments and related material must reach the Coast Guard on or before May 1, 2002.

ADDRESSES: You may mail comments and related material to Marine Safety Office Boston, 455 Commercial Street, Boston, MA. Marine Safety Office Boston maintains the public docket for this rulemaking. Comments and material received from the public, as well as documents indicated in this preamble as being available in the docket, will become part of the docket and will be available for inspection or copying at Marine Safety Office Boston between 8 A.M. and 3 P.M., Monday through Friday, except Federal holidays.

FOR FURTHER INFORMATION CONTACT: Chief Petty Officer Michael Popovich, Marine Safety Office Boston, Waterways Safety and Response Division, at (617) 223–3000.

SUPPLEMENTARY INFORMATION:

Request for Information

We encourage you to participate in this rulemaking by submitting comments and related material. If you do so, please include your name and address, identify the docket number for this rulemaking (CGD01–02–026), indicate the specific section of this document to which each comment applies, and give the reason for each comment. Please submit all comments and related material in an unbound format, no larger than 8½ by 11 inches, suitable for copying. If you would like to know your comments reached us, please enclose a stamped, self addressed postcard or envelope. We will consider all comments and material received during the comment period. We may change this proposed rule in view of them.

Public Meeting

We do not now plan to hold a public meeting. However, you may submit a request for a meeting by writing to Marine Safety Office Boston at the address under **ADDRESSES** explaining why one would be beneficial. If we determine that a public meeting would aid this rulemaking, we will hold one at a time and place announced by a separate notice in the **Federal Register**.

Background and Purpose

We propose to establish a safety zone within a 500-yard radius of the fireworks barge located at position 42°27′48″ N, 070°55′38″ W. The safety zone would be in effect from 5 p.m. until 10:30 p.m. on Monday, July 3, 2002.

The zone would restrict movement within this portion of Nahant Bay for

the fireworks display and is needed to protect the maritime public from the dangers posed by a fireworks display. Marine traffic may transit safely outside of the safety zone during the effective periods. The Captain of the Port does not anticipate any negative impact on vessel traffic due to this event. Public notifications will be made prior to the effective period via safety marine information broadcasts and local notice to mariners.

Regulatory Evaluation

This proposed rule is not a ''significant regulatory action'' under section 3(f) of Executive Order 12866 and does not require an assessment of potential costs and benefits under section 6(a)(3) of that Order. The Office of Management and Budget has not reviewed it under that Order. It is not significant under the regulatory policies and procedures of the Department of Transportation (DOT) (44 FR 11040, February 26, 1979).

The Coast Guard expects the economic impact of this proposed rule to be so minimal that a full Regulatory Evaluation under paragraph 10e of the regulatory policies and procedures of DOT is unnecessary.

Although this proposed regulation will prevent traffic from transiting a portion of Nahant Bay during the effective period, the effects of this regulation will not be significant for several reasons: the minimal time that vessels will be restricted from the area, vessels may safely transit outside of the safety zone, and advance notifications will be made to the local maritime community by safety marine information broadcasts and local notice to mariners.

Small Entities

Under the Regulatory Flexibility Act (5 U.S.C. 601–612), the Coast Guard considered whether this proposed rule would have a significant economic impact on a substantial number of small entities. The term ''small entities'' comprises small businesses, not-for-profit organizations that are independently owned and operated and are not dominant in their fields, and governmental jurisdictions with populations of less than 50,000.

The Coast Guard certifies under 5 U.S.C. 605(b) that this rule will not have a significant economic impact on a substantial number of small entities. This rule will affect the following entities, some of which may be small entities: the owners or operators of vessels intending to transit or anchor in a portion of Nahant Bay between 5 p.m. and 10:30 p.m. on July 3, 2002. This safety zone will not have a significant economic impact on a substantial number of small entities for the following reasons: vessel traffic can safely pass outside of the safety zone during the effective period, the safety zone is limited in duration, and advance notifications which will be made to the local maritime community by safety marine information broadcasts and local notice to mariners.

If you think that your business, organization, or governmental jurisdiction qualifies as a small entity and that this proposed rule would have a significant economic impact on it, please submit a comment (see **ADDRESSES**) explaining why you think it qualifies and how and to what degree this rule would economically affect it.

Assistance for Small Entities

Under section 213(a) of the Small Business Regulatory Enforcement Fairness Act of 1996 (Pubic Law 104–121), we want to assist small entities in understanding this proposed rule so that they can better evaluate its effects on them and participate in the rulemaking. If the rule would affect your small business, organization, or governmental jurisdiction and you have questions concerning its provisions or options for compliance, please contact Chief Petty Officer Michael Popovich at the address listed under **ADDRESSES.**

Collection of Information

This proposed rule would call for no new collection of information under the Paperwork Reduction Act of 1995 (44 U.S.C. 3501–3520).

Federalism

The Coast Guard analyzed this proposed rule under Executive Order 13132 and has determined that this rule does not have implications for federalism under that Order.

Unfunded Mandates Reform Act

The Unfunded Mandates Reform Act of 1995 (2 U.S.C. 1531–1538) governs the issuance of Federal regulations that require unfunded mandates. An unfunded mandate is a regulation that requires a State, local, or tribal government or the private sector to incur direct costs without the Federal Government's having first provided the funds to pay those costs. This proposed rule would not impose an unfunded mandate.

Taking of Private Property

This proposed rule would not effect a taking of private property or otherwise have taking implications under Executive Order 12630, Governmental Actions and Interference with Constitutionally Protected Property Rights.

Civil Justice Reform

This proposed rule meets applicable standards in sections 3(a) and 3(b)(2) of Executive Order 12988, Civil Justice Reform, to minimize litigation, eliminate ambiguity, and reduce burden.

Protection of Children

The Coast Guard analyzed this proposed rule under Executive Order 13045, Protection of Children from Environmental Health Risks and Safety Risks. This rule is not an economically significant rule and does not pose an environmental risk to health or risk to safety that may disproportionately affect children.

Environment

The Coast Guard considered the environmental impact of this proposed rule and concluded that, under figure 2–1, (34)(g), of Commandant Instruction M16475.lC, this proposed rule is categorically excluded from further environmental documentation. A ''Categorical Exclusion Determination'' is available in the docket where indicated under **ADDRESSES.**

List of Subjects in 33 CFR Part 165

Harbors, Marine safety, Navigation (water), Reporting and recordkeeping requirements, Security measures, Waterways.

For the reasons discussed in the preamble, the Coast Guard proposes to amend 33 CFR part 165 as follows:

PART 165—REGULATED NAVIGATION AREAS AND LIMITED ACCESS AREAS

1. The authority citation for part 165 continues to read as follows:

Authority: 33 U.S.C. 1231; 50 U.S.C. 191, 33 CFR 1.05–1(g), 6.04–1, 6.04–6, 160.5; 49 CFR 1.46.

2. Add temporary § 165.T01–026 to read as follows:

§ 165.T01–026 Safety Zone: Lynn Fourth of July Celebration, Lynn, Massachusetts.

(a) *Location.* The following area is a safety zone:

All waters of Nahant Bay within a 500-yard radius of the fireworks launch platform located in approximate position 42°27′48″ N, 070°55′38″ W.

(b) *Effective date.* This section will be effective from 5 p.m. until 10:30 p.m. on July 3, 2002.

(c) *Regulations.* (1) In accordance with the general regulations in § 165.23, entry into or movement within this zone will

be prohibited unless authorized by the Captain of the Port Boston.

(2) All vessel operators shall comply with the instructions of the COTP or the designated on-scene U.S. Coast Guard patrol personnel. On-scene Coast Guard patrol personnel include commissioned, warrant, and petty officers of the Coast Guard on board Coast Guard, Coast Guard Auxiliary, local, state, and federal law enforcement vessels.

Dated: March 1, 2002.

B.M. Salerno,

Captain, U.S. Coast Guard, Captain of the Port, Boston, Massachusetts.

[FR Doc. 02–6762 Filed 3–19–02; 8:45 am]

BILLING CODE 4910–15–U

DEPARTMENT OF TRANSPORTATION

Coast Guard

33 CFR Part 165

[COTP Baltimore 02–002]

RIN 2115–AA97

Security Zone; Potomac River, Washington Channel, Washington, DC

AGENCY: Coast Guard, DOT.

ACTION: Notice of proposed rulemaking.

SUMMARY: The Coast Guard proposes establishing a temporary security zone in the waters of Washington Channel on the Potomac River off Fort Lesley J. McNair, Washington, DC, during the May 30, 2002, U.S. Coast Guard Commandant's Change of Command ceremony. The security zone is necessary to provide for the security and safety of life and property of event participants, spectators and mariners on U.S. navigable waters during the event. Entry into this zone is prohibited unless authorized by the Captain of the Port, Baltimore, Maryland, or designated representative.

DATES: Comments and related material must reach the Coast Guard on or before April 19, 2002.

ADDRESSES: You may mail comments and related material to the Port Safety, Security and Waterways Management Branch, at Commander, U.S. Coast Guard Activities Baltimore, 2401 Hawkins Point Road, Baltimore, Maryland, 21226–1791. U.S. Coast Guard Activities Baltimore, Port Safety, Security and Waterways Management Branch maintains the public docket for this rulemaking. Comments and material received from the public, as well as documents indicated in this preamble as being available in the docket, will become part of this docket and will be available for inspection or copying at U.S. Coast Guard Activities Baltimore, Port Safety, Security and Waterways Management Branch between 8 a.m. and 4 p.m., Monday through Friday, except Federal holidays.

FOR FURTHER INFORMATION CONTACT: Ronald L. Houck, Port Safety, Security and Waterways Management Branch, at telephone number (410) 576–2674.

SUPPLEMENTARY INFORMATION:

Request for Comments

We encourage you to participate in this rulemaking by submitting comments and related material. If you do so, please include your name and address, identify the docket number for this rulemaking (COTP Baltimore–02–002), indicate the specific section of this document to which each comment applies, and give the reason for each comment. Please submit all comments and related material in an unbound format, no larger than 8½ by 11 inches, suitable for copying. If you would like to know your submission reached us, please enclose a stamped, self-addressed postcard or envelope. We will consider all comments and material received during the comment period. We may change this proposed rule in view of them.

Public Meeting

We do not now plan to hold a public meeting. But you may submit a request for a meeting by writing to Commander, U.S. Coast Guard Activities Baltimore at the address under **ADDRESSES** explaining why one would be beneficial. If we determine that one would aid this rulemaking, we will hold one at a time and place announced by a separate notice in the **Federal Register**.

Background and Purpose

The Coast Guard will conduct a Change of Command ceremony along the Potomac River at Washington, DC. A security zone is needed to protect dignitaries taking part in the high-level military ceremony from potential threats posed by waterborne acts of sabotage or other subversive acts. The purpose of the proposed regulation is to promote maritime safety and protect participants and spectators during the event. These regulations will impact the movement of all vessels operating in the specified area on the Washington Channel at Washington, DC.

Discussion of Proposed Rule

The U.S. Coast Guard Commandant's Change of Command ceremony will be held at Fort Lesley J. McNair, Washington, DC, on May 30, 2002. The event will consist of a background comprised of three U.S. Coast Guard vessels anchored adjacent to Fort McNair on the confined waters of the Washington Channel, on the Potomac River. A security zone is needed from 11 a.m. to 4 p.m. on May 30, 2002 to safeguard event participants and spectators. U.S. Coast Guard patrol vessels will be provided to prevent the movement of persons and vessels in an area approximately 200 yards wide and 450 yards long within Washington Channel. Entry into this zone is prohibited unless authorized by the Captain of the Port or his or her designated representative. The Captain of the Port will notify the public of changes in the status of the zone by a Marine Safety Radio Broadcast.

Regulatory Evaluation

This proposed rule is not a ''significant regulatory action'' under section 3(f) of Executive Order 12866, Regulatory Planning and Review, and does not require an assessment of potential costs and benefits under section 6(a)(3) of that Order. The Office of Management and Budget has not reviewed it under that Order. It is not ''significant'' under the regulatory policies and procedures of the Department of Transportation (DOT)(44 FR 11040, February 26, 1979).

We expect the economic impact of this proposed rule to be so minimal that a full Regulatory Evaluation under paragraph 10e of the regulatory policies and procedures of DOT is unnecessary. This temporary rule affects a limited area for approximately five hours, and will not completely close the navigable channel. Therefore, the Coast Guard expects the economic impact of this proposal to be so minimal that a full Regulatory Evaluation under paragraph 10(e) of the regulatory policies and procedures of DOT is unnecessary.

Small Entities

Under the Regulatory Flexibility Act (5 U.S.C. 601–612), we have considered whether this proposed rule would have a significant economic impact on a substantial number of small entities. The term ''small entities'' comprises small businesses, not-for-profit organizations that are independently owned and operated and are not dominant in their fields, and governmental jurisdictions with populations of less than 50,000.

The Coast Guard certifies under 5 U.S.C. 605(b) that this proposed rule would not have a significant economic impact on a substantial number of small entities. Because this proposal will only be in effect for a limited amount of time, and extensive advisories will be made to

the affected maritime community so that they may adjust their schedules accordingly, the Coast Guard expects the impact of this proposal to be minimal.

If you think that your business, organization, or governmental jurisdiction qualifies as a small entity and that this rule would have a significant economic impact on it, please submit a comment (see **ADDRESSES**) explaining why you think it qualifies and how and to what degree this rule would economically affect it.

Assistance for Small Entities

Under section 213(a) of the Small Business Regulatory Enforcement Fairness Act of 1996 (Public Law 104–121), we want to assist small entities in understanding this proposed rule so that they can better evaluate its effects on them and participate in the rulemaking. If the proposed rule would affect your small business, organization, or governmental jurisdiction and you have questions concerning its provisions or options for compliance, please contact Ronald L. Houck, Port Safety, Security and Waterways Management Branch, at telephone number (410) 576–2674.

Collection of Information

This proposed rule would call for no new collection of information under the Paperwork Reduction Act of 1995 (44 U.S.C. 3501–3520).

Federalism

A rule has implications for federalism under Executive Order 13132, Federalism, if it has a substantial direct effect on State or local governments and would either preempt State law or impose a substantial direct cost of compliance on them. We have analyzed this proposed rule under that Order and have determined that it does not have implications for federalism.

Unfunded Mandates Reform Act

The Unfunded Mandates Reform Act of 1995 (2 U.S.C. 1531–1538) requires Federal agencies to assess the effects of their discretionary regulatory actions. In particular, the Act addresses actions that may result in the expenditure by a State, local, or tribal government, in the aggregate, or by the private sector of $100,000,000 or more in any one year. Though this proposed rule would not result in such an expenditure, we do discuss the effects of this rule elsewhere in this preamble.

Taking of Private Property

This proposed rule would not effect a taking of private property or otherwise have taking implications under Executive Order 12630, Governmental Actions and Interference with Constitutionally Protected Property Rights.

Civil Justice Reform

This proposed rule meets applicable standards in sections 3(a) and 3(b)(2) of Executive Order 12988, Civil Justice Reform, to minimize litigation, eliminate ambiguity, and reduce burden.

Protection of Children

We have analyzed this proposed rule under Executive Order 13045, Protection of Children from Environmental Health Risks and Safety Risks. This rule is not an economically significant rule and would not create an environmental risk to health or risk to safety that might disproportionately affect children.

Indian Tribal Governments

This proposed rule does not have tribal implications under Executive Order 13175, Consultation and Coordination with Indian Tribal Governments, because it would not have a substantial direct effect on one or more Indian tribes, on the relationship between the Federal Government and Indian tribes, or on the distribution of power and responsibilities between the Federal Government and Indian tribes. We invite your comments on how this proposed rule might impact tribal governments, even if that impact may not constitute a ''tribal implication'' under the Order.

Energy Effects

We have analyzed this proposed rule under Executive Order 13211, Actions Concerning Regulations That Significantly Affect Energy Supply, Distribution, or Use. We have determined that it is not a ''significant energy action'' under that order because it is not a ''significant regulatory action'' under Executive Order 12866 and is not likely to have a significant adverse effect on the supply, distribution, or use of energy. It has not been designated by the Administrator of the Office of Information and Regulatory Affairs as a significant energy action. Therefore, it does not require a Statement of Energy Effects under Executive Order 13211.

Environment

We have considered the environmental impact of this proposed rule and concluded that, under figure 2–1, paragraph (34)(g), of Commandant Instruction M16475.lD, this rule is categorically excluded from further environmental documentation because of the limited duration and scope of the regulation. A ''Categorical Exclusion Determination'' is available in the docket where indicted under **ADDRESSES.**

List of Subjects in 33 CFR Part 165

Harbors, Marine safety, Navigation (water), Reporting and recordkeeping requirements, Security measures, Waterways.

For the reasons discussed in the preamble, the Coast Guard proposes to amend 33 CFR part 165 as follows:

PART 165—REGULATED NAVIGATION AREAS AND LIMITED ACCESS AREAS

1. The authority citation for part 165 continues to read as follows:

Authority: 33 U.S.C. 1231; 50 U.S.C. 191, 33 CFR 1.05–1(g), 6.04–1, 6.04–6, 160.5; 49 CFR 1.46.

2. Add § 165.T05–006 to read as follows:

§ 165.T05–006 Security Zone; Potomac River, Washington Channel, Washington, D.C.

(a) *Location.* The following area is a security zone: all waters of the Washington Channel, from surface to bottom, encompassed by lines connecting the following points, beginning at 38°52′03″ N, 077°01′07″ W, thence to 38°52′03″ N, 077°01′14″ W, thence to 38°51′50″ N, 077°01′16″ W, thence to 38°51′50″ N, 077°01′07″ W, thence to 38°52′03″ N, 077°01′07″ W. These coordinates are based upon NAD 1983.

(b) *Regulations.* (1) In accordance with § 165.33, entry into this zone is prohibited unless authorized by the Coast Guard Captain of the Port, Baltimore, Maryland, or his or her designated representative. Section 165.33 also contains other general requirements.

(2) Persons desiring to transit the area of the security zone may contact the Captain of the Port at telephone number (410) 576–2693 or on VHF channel 16 (156.8 MHz) or VHF channel 22 (157.1 MHz) to seek permission to transit the area. If permission is granted, all persons and vessels shall comply with the instructions of the Captain of the Port or his or her designated representative.

(c) *Authority.* In addition to 33 U.S.C. 1231 and 50 U.S.C. 191, the authority for this section includes 33 U.S.C. 1226.

(d) *Effective period.* This section will be effective from 11 a.m. through 4 p.m. on May 30, 2002.

Dated: March 4, 2002.

R.B. Peoples,

Captain, U.S. Coast Guard, Captain of the Port, Baltimore, Maryland.

[FR Doc. 02–6764 Filed 3–19–02; 8:45 am]

BILLING CODE 4910–15–U

ENVIRONMENTAL PROTECTION AGENCY

40 CFR Part 52

[TX–104–1–7401b; FRL–7160–1]

Approval And Promulgation of Implementation Plans; Texas; Revisions to General Rules and Regulations for Control of Air Pollution by Permits for New Sources and Modifications

AGENCY: Environmental Protection Agency (EPA).

ACTION: Proposed rule; reopening of public comment period.

SUMMARY: The EPA is reopening the public comment period for a proposed approval of revisions to the Texas State Implementation Plan (SIP) published in the **Federal Register** on September 24, 2001.

DATES: Written comments must be received by EPA on or before April 19, 2002.

ADDRESSES: Written comments on this action should be addressed to Mr. David W. Neleigh, Chief, Air Permits Section (6PD–R), at the EPA Region 6 Office listed below. Copies of documents relevant to this action are available for public inspection during normal business hours at the following locations. Anyone wanting to examine these documents should make an appointment with the appropriate office at least two working days in advance.

Environmental Protection Agency, Region 6, Air Permits Section (6PD–R), 1445 Ross Avenue, Dallas, Texas 75202–2733.

Texas Natural Resource Conservation Commission, Office of Air Quality, 12124 Park 35 Circle, Austin, Texas 78753.

FOR FURTHER INFORMATION CONTACT: Stanley M. Spruiell, Air Permits Section at (214) 665–7212 or at *spruiell.stanley@epa.gov.*

SUPPLEMENTARY INFORMATION: In response to a request from the public, EPA is reopening the comment period for a proposed rule published in the **Federal Register** on September 24, 2001 (66 FR 48850), for approval of revisions to the Texas Natural Resource Conservation Commission (TNRCC) General Rules and TNRCC Regulations for Control of Air Pollution by Permits for New Sources and Modifications in the Texas SIP. These revisions were submitted by the Governor of Texas on August 31, 1993, and July 22, 1998. See the information provided in the direct final rule (66 FR 48796) located in the final rules section and the proposed rule (66 FR 48850) located in the proposed rules section of the September 24, 2001, **Federal Register**. The direct final rule was withdrawn November 23, 2001 (66 FR 58667).

List of Subjects in 40 CFR Part 52

Environmental protection, Air pollution control, Carbon monoxide, Intergovernmental relations, Lead, Nitrogen oxides, Ozone, Particulate matter, Reporting and recordkeeping requirements, Sulfur oxides, Volatile organic compounds.

Authority: 42 U.S.C. 7401 *et seq.*

Dated: March 11, 2002.

Lawrence E. Starfield,

Acting Regional Administrator, Region 6.

[FR Doc. 02–6721 Filed 3–19–02; 8:45 am]

BILLING CODE 6560–50–P

ENVIRONMENTAL PROTECTION AGENCY

40 CFR Part 194

[FRL–7161–4]

RIN 2060–AG85

Waste Characterization Program Documents Applicable to Transuranic Radioactive Waste From the Idaho National Engineering and Environmental Laboratory for Disposal at the Waste Isolation Pilot Plant

AGENCY: Environmental Protection Agency.

ACTION: Notice of availability; opening of public comment period.

SUMMARY: The Environmental Protection Agency (EPA) is announcing the availability of, and soliciting public comments for 30 days on, Department of Energy (DOE) documents applicable to characterization of transuranic (TRU) radioactive waste at the Idaho National Engineering and Environmental Laboratory (INEEL) proposed for disposal at the Waste Isolation Pilot Plant (WIPP). The documents (Item II–A2–38, Docket A–98–49) are available for review in the public dockets listed in **ADDRESSES.** EPA will conduct an inspection of waste streams, characterization systems and processes at INEEL to verify that the site can characterize transuranic waste in accordance with EPA's WIPP compliance criteria. EPA will perform this inspection the week of April 8, 2002. This notice of the inspection and comment period accords with 40 CFR 194.8.

DATES: EPA is requesting public comment on the documents. Comments must be received by EPA's official Air Docket on or before April 19, 2002.

ADDRESSES: Comments should be submitted to: Docket No. A–98–49, Air Docket, Room M–1500, U.S. Environmental Protection Agency, 401 M Street, SW, Mail Code 6102, Washington, DC 20460. The DOE documents are available for review in the official EPA Air Docket in Washington, DC, Docket No. A–98–49, Category II–A2, and at the following three EPA WIPP informational docket locations in New Mexico: in Carlsbad at the Municipal Library, Hours: Monday–Thursday, 10 a.m.–9 p.m., Friday–Saturday, 10 a.m.–6 p.m., and Sunday 1 p.m.–5 p.m.; in Albuquerque at the Government Publications Department, Zimmerman Library, University of New Mexico, Hours: vary by semester; and in Santa Fe at the New Mexico State Library, Hours: Monday–Friday, 9 a.m.–5 p.m..

As provided in EPA's regulations at 40 CFR part 2, and in accordance with normal EPA docket procedures, if copies of any docket materials are requested, a reasonable fee may be charged for photocopying. Air Docket A–98–49 in Washington, DC, accepts comments sent electronically or by fax (fax: 202–260–4400; e–mail: *a-and-r-docket@epa.gov*).

FOR FURTHER INFORMATION CONTACT: Ed Feltcorn, Office of Radiation and Indoor Air, (202) 564–9422. You can also call EPA's toll-free WIPP Information Line, 1–800–331–WIPP or visit our website at *http://www.epa/gov/radiation/wipp.*

SUPPLEMENTARY INFORMATION:

Background

DOE is developing the WIPP near Carlsbad in southeastern New Mexico as a deep geologic repository for disposal of TRU radioactive waste. As defined by the WIPP Land Withdrawal Act (LWA) of 1992 (Public Law 102–579), as amended (Public Law 104–201), TRU waste consists of materials containing elements having atomic numbers greater than 92 (with half-lives greater than twenty years), in concentrations greater than 100 nanocuries of alpha-emitting TRU isotopes per gram of waste. Much of the existing TRU waste consists of items contaminated during the production of nuclear weapons, such as rags, equipment, tools, and sludges.

On May 13, 1998, EPA announced its final compliance certification decision to the Secretary of Energy (published May 18, 1998, 63 FR 27354). This decision stated that the WIPP will comply with EPA's radioactive waste disposal regulations at 40 CFR part 191, subparts B and C.

The final WIPP certification decision includes conditions that (1) prohibit shipment of TRU waste for disposal at WIPP from any site other than the Los Alamos National Laboratories (LANL) until the EPA determines that the site has established and executed a quality assurance program, in accordance with §§ 194.22(a)(2)(i), 194.24(c)(3), and 194.24(c)(5) for waste characterization activities and assumptions (Condition 2 of appendix A to 40 CFR part 194); and (2) (with the exception of specific, limited waste streams and equipment at LANL) prohibit shipment of TRU waste for disposal at WIPP (from LANL or any other site) until EPA has approved the procedures developed to comply with the waste characterization requirements of § 194.22(c)(4) (Condition 3 of appendix A to 40 CFR part 194). The EPA's approval process for waste generator sites is described in § 194.8. As part of EPA's decision-making process, the DOE is required to submit to EPA appropriate documentation of quality assurance and waste characterization programs at each DOE waste generator site seeking approval for shipment of TRU radioactive waste to WIPP. In accordance with § 194.8, EPA will place such documentation in the official Air Docket in Washington, DC, and informational dockets in the State of New Mexico for public review and comment.

EPA will perform an inspection of INEEL's waste characterization systems and processes for TRU waste in accordance with Conditions 2 and 3 of the WIPP certification. Specifically, we will inspect the performance of new equipment " the Waste Assay Gamma Spectrometer (WAGS) system, SWEPP Gamma Ray Spectrometer (SGRS) system, and Data Review Expert System (DXRS) for NDA validation. In addition, solidified organic waste streams at INEEL will be examined for NDA characterization and certification. The inspection is scheduled to take place the week of April 8, 2002.

EPA has placed a number of documents pertinent to the inspection in the public docket described in **ADDRESSES.** The documents are listed as Item II–A2–38 in Docket A–98–49. In accordance with 40 CFR 194.8, as amended by the final certification decision, EPA is providing the public 30 days to comment on these documents.

If EPA determines as a result of the inspection that the proposed waste streams, processes, systems, and equipment at INEEL adequately control the characterization of transuranic waste, we will notify DOE by letter and place the letter in the official Air Docket in Washington, DC, as well as in the informational docket locations in New Mexico. A letter of approval will allow DOE to ship TRU waste to WIPP using the approved characterization processes. The EPA will not make a determination of compliance prior to the inspection or before the 30-day comment period has closed.

Information on the certification decision is filed in the official EPA Air Docket, Docket No. A–93–02 and is available for review in Washington, DC, and at three EPA WIPP informational docket locations in New Mexico. The dockets in New Mexico contain only major items from the official Air Docket in Washington, DC, plus those documents added to the official Air Docket since the October 1992 enactment of the WIPP LWA.

Dated: March 13, 2002.

Robert Brenner,

Acting Assistant Administrator for Air and Radiation.

[FR Doc. 02–6844 Filed 3–19–02; 8:45 am]

BILLING CODE 6560–50–P

ENVIRONMENTAL PROTECTION AGENCY

40 CFR Part 721

[OPPTS–50646; FRL–6820–7]

RIN 2070–AB27

Proposed Revocation of Significant New Uses of Certain Chemical Substances

AGENCY: Environmental Protection Agency (EPA).

ACTION: Proposed rule.

SUMMARY: EPA is proposing to revoke significant new use rules (SNURs) for eight substances promulgated under section 5(a)(2) of the Toxic Substances Control Act (TSCA) based on new data. Based on the new data the Agency no longer finds that activities not described in the corresponding TSCA section 5(e) consent orders for these chemical substances may result in significant changes in human or environmental exposure.

DATES: Comments, identified by docket control number OPPTS–50646 must be received on or before April 19, 2002.

ADDRESSES: Comments may be submitted by mail, electronically, or in person. Please follow the detailed instructions for each method as provided in Unit I.C. of the **SUPPLEMENTARY INFORMATION**. To ensure proper receipt by EPA, it is imperative that you identify docket control number OPPTS–50646 in the subject line on the first page of your response.

FOR FURTHER INFORMATION CONTACT: *For general information contact*: Barbara Cunningham, Acting Director, Environmental Assistance Division, Office of Pollution Prevention and Toxics (7408M), Environmental Protection Agency, 1200 Pennsylvania Ave., NW., Washington, DC 20460; telephone number: (202) 554–1404; e-mail address: TSCA-Hotline@epa.gov.

For technical information contact: James Alwood, Chemical Control Division, Office of Pollution Prevention and Toxics (7405M), Environmental Protection Agency, 1200 Pennsylvania Ave., NW., Washington, DC 20460; telephone number: (202) 564–8974; e-mail address: alwood.jim@epa.gov.

SUPPLEMENTARY INFORMATION:

I. General Information

A. Does this Action Apply to Me?

You may be potentially affected by this action if you manufacture, import, process, or use the chemical substances contained in this proposed revocation. Potentially affected categories and entities may include, but are not limited to:

Categories	NAICS codes	Examples of potentially affected entities
Chemical manufacturers	325	Manufacturers, importers, processors, and users of chemicals
Petroleum and coal product industries	324	Manufacturers, importers, processors, and users of chemicals

This listing is not intended to be exhaustive, but rather provides a guide for readers regarding entities likely to be affected by this action. Other types of entities not listed in the table in this unit could also be affected. The North American Industrial Classification System (NAICS) codes have been provided to assist you and others in determining whether or not this action applies to certain entities. To determine whether you or your business is affected by this action, you should carefully examine the applicability provisions in title 40 of the Code of Federal Regulations (CFR) at 40 CFR 721.5. If you have any questions regarding the applicability of this action to a particular entity, consult the technical person listed under **FOR FURTHER INFORMATION CONTACT**.

B. How Can I Get Additional Information, Including Copies of this Document and Other Related Documents?

1. *Electronically*. You may obtain electronic copies of this document, and certain other related documents that might be available electronically, from the EPA Internet Home Page at http://www.epa.gov/. To access this document, on the Home Page select ''Laws and Regulations,'' ''Regulations and Proposed Rules,'' and then look up the entry for this document under the ''**Federal Register—**Environmental Documents.'' You can also go directly to the **Federal Register** listings at http://www.epa.gov/fedrgstr/. A frequently updated electronic version of 40 CFR part 721 is available at http://www.access.gpo.gov/nara/cfr/cfrhtml_00/Title_40/40cfr721_00.html, a beta site currently under development.

2. *In person*. The Agency has established an official record for this action under docket control number OPPTS–50646. The official record consists of the documents specifically referenced in this action, any public comments received during an applicable comment period, and other information related to this action, including any information claimed as Confidential Business Information (CBI). This official record includes the documents that are physically located in the docket, as well as the documents that are referenced in those documents. The public version of the official record does not include any information claimed as CBI. The public version of the official record, which includes printed, paper versions of any electronic comments submitted during an applicable comment period, is available for inspection in the TSCA Nonconfidential Information Center, North East Mall Rm. B–607, Waterside Mall, 401 M St., SW., Washington, DC. The Center is open from noon to 4 p.m., Monday through Friday, excluding legal holidays. The telephone number for the Center is (202) 260–7099.

C. How and to Whom Do I Submit Comments?

You may submit comments through the mail, in person, or electronically. To ensure proper receipt by EPA, it is imperative that you identify docket control number OPPTS–50646 in the subject line on the first page of your response.

1. *By mail*. Submit your comments to: Document Control Office (7407), Office of Pollution Prevention and Toxics (OPPT), Environmental Protection Agency, 1200 Pennsylvania Ave., NW., Washington, DC 20460.

2. *In person or by courier*. Deliver your comments to: OPPT Document Control Office (DCO) in EPA East Building Rm. 6428, 1201 Constitution Ave. NW., Washington, DC. The DCO is open from 8 a.m. to 4 p.m., Monday through Friday, excluding legal holidays. The telephone number for the DCO is (202) 564–8930.

3. *Electronically*. You may submit your comments electronically by e-mail to: oppt.ncic@epa.gov, or mail your computer disk to the address identified above. Do not submit any information electronically that you consider to be CBI. Electronic comments must be submitted as an ASCII file avoiding the use of special characters and any form of encryption. Comments will also be accepted on standard disks in WordPerfect 6.1/8.0 or ASCII file format. All comments in electronic form must be identified by docket control number OPPTS–50646. Electronic comments may also be filed online at many Federal Depository Libraries.

D. How Should I Handle CBI That I Want to Submit to the Agency?

Do not submit any information electronically that you consider to be CBI. You may claim information that you submit to EPA in response to this document as CBI by marking any part or all of that information as CBI. Information so marked will not be disclosed except in accordance with procedures set forth in 40 CFR part 2. In addition to one complete version of the comment that includes any information claimed as CBI, a copy of the comment that does not contain the information claimed as CBI must be submitted for inclusion in the public version of the official record. Information not marked confidential will be included in the public version of the official record without prior notice. If you have any questions about CBI or the procedures for claiming CBI, please consult the technical person listed under **FOR FURTHER INFORMATION CONTACT**.

E. What Should I Consider as I Prepare My Comments for EPA?

We invite you to provide your views on the various options we propose, new approaches we haven't considered, the potential impacts of the various options (including possible unintended consequences), and any data or information that you would like the Agency to consider during the development of the final action. You may find the following suggestions helpful for preparing your comments:

1. Explain your views as clearly as possible.

2. Describe any assumptions that you used.

3. Provide copies of any technical information and/or data you used that support your views.

4. If you estimate potential burden or costs, explain how you arrived at the estimate that you provide.

5. Provide specific examples to illustrate your concerns.

6. Offer alternative ways to improve the proposed revocation.

7. Make sure to submit your comments by the deadline in this document.

8. To ensure proper receipt by EPA, be sure to identify the docket control number assigned to this action in the subject line on the first page of your response. You may also provide the name, date, and **Federal Register** citation.

II. Background

A. What Action is the Agency Taking?

In the **Federal Register** referenced for each substance, OPPTS–50601, September 23, 1992 (57 FR 44068), OPPTS–50620, March 1, 1995 (60 FR 11044) (FRL–4868–4), and OPPTS–50623, December 2, 1996 (61 FR 63737) (FRL–4964–3), establishing significant new uses for the substances, EPA issued a SNUR. Because of additional data EPA has received for these substances, EPA is proposing to revoke the significant new use and recordkeeping requirements for the following chemical substances under 40 CFR part 721, subpart E. In this unit, EPA provides a brief description for each substance, including its premanufacture notice (PMN) number, chemical name (generic name if the specific name is claimed as CBI), CAS number (if assigned), basis for the revocation of the TSCA section 5(e) consent order for the substance, and the CFR citation. Further background information for the substances is contained in Unit I.B.2 of this document.

PMN Number P–89–764
Chemical name: Neodecaneperoxoic acid, 1,1,3,3-tetramethylbutyl ester.
CAS number: 51240–95–0.
Federal Register *publication date and reference:* September 23, 1992 (57 FR 44068).
Docket number: OPPTS–50601.
Basis for revocation of SNUR: EPA issued a TSCA section 5(e) consent order between EPA and the PMN submitter for this substance based on a potential unreasonable risk of cancer by analogy to structurally similar peroxides. Based on the results of test data developed by an industry consortium to address potential toxicity of peroxides, EPA has concluded that available information does not support identification of peroxides as potential carcinogens. Therefore, EPA determined that it could no longer conclude that the manufacturing, processing, and use of P–89–764 may present an unreasonable risk under section 5(e) of TSCA and has, therefore, revoked the consent order for P–89–764. EPA can no longer make the finding that activities not described in the TSCA section 5(e) consent order may result in significant changes in human exposure.
CFR citation: 40 CFR 721.5300.

PMN Number P–93–193
Chemical name: Propanol, [2-(1,1-dimethylethoxy)methylethoxy]-.
CAS number: 132739–31–2.
Federal Register *publication date and reference:* March 1, 1995 (60 FR 11044).
Docket number: OPPTS–50620.
Basis for revocation of SNUR: EPA issued a consent order between EPA and the PMN submitter requiring submission to EPA of certain human health and environmental toxicity testing before manufacturing a specified amount of the PMN substance based on the fact that the PMN substance would be produced in substantial quantities, and that there might be significant or substantial human exposure to the PMN substance. Based on the results of these studies, potential exposures, and the toxicity of the compounds the PMN substance will replace, EPA determined that it could no longer conclude that the manufacturing, processing, and use of P–93–193 may present an unreasonable risk under section 5(e) of TSCA and has, therefore, revoked the consent order for P–93–193. EPA can no longer make the finding that activities not described in the TSCA section 5(e) consent order may result in significant changes in human exposure.
CFR citation: 40 CFR 721.8170.

PMN Numbers P–94–1634/1635/1636/1637/1638/1639
Chemical name: Fatty acids, C(14-18)-unsaturated, branched and linear, methyl and butyl esters.
CAS number: Not available.
Federal Register *publication date and reference:* December 2, 1996 (61 FR 63737).
Docket number: OPPTS–50623.
Basis for revocation of SNUR: EPA issued a consent order between EPA and the PMN submitter requiring submission to EPA of certain human health toxicity testing before manufacturing a specified amount of the PMN substances based on the fact that the PMN substances would be produced in substantial quantities, and that there might be significant or substantial human exposure to the PMN substances. EPA revoked the consent order based on the PMN submitter's commitment to sponsor the substances under EPA's High Production Volume (HPV) Challenge Program and the expectation that the information and/or test data developed by the company pursuant to its HPV commitment will satisfy EPA's information needs for the PMN substances. EPA can no longer make the finding that activities not described in the TSCA section 5(e) consent order may result in significant changes in human exposure.
CFR citation: 40 CFR 721.3628.

B. What is the Agency's Authority for Taking this Action?

Section 5(a)(2) of TSCA (15 U.S.C. 2604(a)(2)) authorizes EPA to determine that a use of a chemical substance is a ''significant new use.'' EPA must make this determination by rule after considering all relevant factors, including those listed in section 5(a)(2) of TSCA. Once EPA determines that a use of a chemical substance is a significant new use, section 5(a)(1)(B) of TSCA requires persons to submit a notice to EPA at least 90 days before they manufacture, import, or process the substance for that use. The mechanism for reporting under this requirement is established under 40 CFR 721.5.

During review of the PMNs submitted for the chemical substances that are the subject of this proposed revocation, EPA concluded that regulation was warranted based on available information that indicated activities not described in the TSCA section 5(e) consent order might result in significant changes in human or environmental exposure as described in section 5(a)(2) of TSCA. Based on these findings, SNURs were promulgated.

EPA has revoked the TSCA section 5(e) consent orders that are the basis for these SNURs and no longer finds that activities other than those described in the TSCA section 5(e) consent orders may result in significant changes in human or environmental exposure. The revocation of SNUR provisions for these substances is consistent with the findings set forth in the preamble to the proposed revocation of each individual SNUR.

Therefore, EPA is proposing to revoke the SNUR provisions for these chemical substances. When this revocation becomes final, EPA will no longer require notice of intent to manufacture, import, or process these substances. In addition, export notification under section 12(b) of TSCA will no longer be required.

III. Regulatory Assessment Requirements

This proposed rule revokes or eliminates an existing regulatory requirement and does not contain any new or amended requirements. As such, the Office of Management and Budget (OMB) has exempted these types of actions from review under Executive Order 12866, entitled ''*Regulatory Planning and Review*'' (58 FR 51735, October 4, 1993).

Since this proposed rule does not impose any requirements, it does not contain any information collections subject to approval under the Paperwork Reduction Act (PRA), 44 U.S.C. 3501 *et seq.*, or require any other action under Title II of the Unfunded Mandates Reform Act of 1995 (UMRA) (Pub. L. 104–4).

Nor does it require any prior consultation as specified by Executive Order 12875, entitled ''*Enhancing the Intergovernmental Partnership*'' (58 FR 58093, October 28, 1993), or special considerations as required by Executive Order 12898, entitled ''*Federal Actions to Address Environmental Justice in Minority Populations and Low-Income Populations*'' (59 FR 7629, February 16, 1994) or require OMB review in accordance with Executive Order 13045, entitled ''*Protection of Children from Environmental Health Risks and Safety Risks*'' (62 FR 19885, April 23, 1997).

On August 4, 1999, President Clinton issued a new executive order on ''*Federalism*,'' Executive Order 13132 (64 FR 43255, August 10, 1999). This proposed rule will not have a substantial direct effect on States, on the relationship between the national government and the States, or on the distribution of power and responsibilities among the various levels of government, as specified in Executive Order 13132.

In addition, pursuant to section 605(b) of the Regulatory Flexibility Act (RFA) (5 U.S.C. 601 *et seq.*), the Agency has determined that SNUR revocations, which eliminate requirements without imposing any new ones, have no adverse economic impacts.

This proposed rule is not subject to Executive Order 13211, ''*Actions Concerning Regulations That Significantly Affect Energy Supply, Distribution, or Use*'' (66 FR 28355, May 22, 2001) because it is not a significant regulatory action under Executive Order 12866.

List of Subjects in 40 CFR Part 721

Environmental protection, Chemicals, Hazardous substances, Reporting and recordkeeping requirements.

Dated: March 1, 2002.

William H. Sanders, III,

Office Director, Office of Pollution Prevention and Toxics.

Therefore, it is proposed that 40 CFR part 721 be amended as follows:

PART 721—[AMENDED]

1. The authority citation for part 721 would continue to read as follows:

Authority: 15 U.S.C. 2604, 2607, and 2625(c).

§§ 721.3628, 721.5300, and 721.8170 [Removed]

2. By removing §§ 721.3628, 721.5300, and 721.8170.

[FR Doc. 02–6724 Filed 3–19–02; 8:45 am]

BILLING CODE 6560–50–S

FEDERAL COMMUNICATIONS COMMISSION

47 CFR Part 73

[DA 02–495, MM Docket No. 99–282, RM–9710]

FM Broadcasting Services; Littlefield, AZ

AGENCY: Federal Communications Commission.

ACTION: Petition denial; dismissal of application for review.

SUMMARY: This document dismisses, at the request of Mountain West Broadcasting, its application for review of a *Memorandum Opinion and Order* in this proceeding, 65 FR 69693, published November 20, 2000.[1] *The Memorandum Opinion and Order* affirmed an earlier *Report and Order* in this proceeding, 65 FR 25463, published May 2, 2000, which had denied Mountain West's request to allot Channel 265C to Littlefield, Arizona.

FOR FURTHER INFORMATION CONTACT: Andrew J. Rhodes, Mass Media Bureau, (202) 418–2120.

SUPPLEMENTARY INFORMATION: This is a summary of the Memorandum Opinion and Order, MM Docket 99–282, adopted February 20, 2002, and released March 1, 2002. The full text of this Commission decision is available for inspection and copying during normal business hours in the Commission's Reference Information Center (room CY–A257), 445 12th Street, SW., Washington, DC 20554. The complete text of this decision may be also purchased from the Commission's copy contractor, Qualex International Portals II, 445 12th Street, SW., Room CY–B402, Washington, DC, 20554.

Federal Communications Commission.

John A. Karousos,

Chief, Allocations Branch, Policy and Rules Division, Mass Media Bureau.

[FR Doc. 02–6377 Filed 3–19–02; 8:45 am]

BILLING CODE 6712–01–P

[1] This document inadvertently appeared in the Rules section. It should have appeared in the Proposed Rules section.

DEPARTMENT OF TRANSPORTATION

Transportation Security Administration

49 CFR Part 1511

[Docket No. TSA–2002–11334]

RIN 2110–AA02

Aviation Security Infrastructure Fees

AGENCY: Transportation Security Administration, DOT.

ACTION: Extension of comment period.

SUMMARY: This document announces the extension of the comment period on the Transportation Security Administration's (TSA) Aviation Security Infrastructure Fee interim final rule. TSA has decided to grant, in part, a request for an extension of the comment period and will extend the comment period for fifteen (15) days. The comment period will now end on April 2, 2002.

DATES: The comment period is being extended from March 18, 2002, to April 2, 2002.

ADDRESSES: Submit written, signed comments to TSA Docket No. 2002–11334 , the Docket Clerk, U.S. DOT Dockets, Room PL–401, 400 Seventh Street, SW., Washington, DC 20590–0001. All comments received will be available for examination at the above address between 9 a.m. and 5 p.m., e.t., Monday through Friday, except Federal holidays. Those desiring notification of receipt of comments must include a self-addressed, stamped envelope or postcard on which the following statement is made: ''Comments to Docket No. TSA–2002–11334.'' The post card will be date stamped and mailed to the sender. Comments also may be sent electronically to the Dockets Management System (DMS) at: *http://dms.dot.gov* at any time. Those who wish to file comments electronically should follow the instructions on the DMS web site.

FOR FURTHER INFORMATION CONTACT: For guidance involving technical matters: Randall Fiertz, Deputy Director, Cost and Performance Management, Federal Aviation Administration, c/o Department of Transportation (DOT), Office of the Secretary, Office of the Assistant Secretary for Budget and Programs, 400 Seventh St., SW., Room 10101, Washington, DC 20590; telephone (202) 366–9192. For other matters: Rita M. Maristch, Department of Transportation, Office of the General Counsel, Office of Environmental, Civil Rights and General Law, 400 Seventh St., SW., Room 10102, Washington, DC 20590; telephone (202) 366–9161. Office hours are from 9:00 a.m. to 5:30 p.m., e.t. Monday through Friday, except Federal holidays.

SUPPLEMENTARY INFORMATION:

Availability of the Interim Final Rule and Comments Received

An electronic copy of this document and the interim final rule may be downloaded using a modem and suitable communications software from the Government Printing Office's Electronic Bulletin Boards Service at (202) 512–1661. Internet users may reach the **Federal Register**'s home page at: *http://www.nara.gov/fedreg* and the Government Printing Office's database at: *http://www.access.gpo.gov*.

Internet users can access this document and all other documents and comments received by TSA through DOT's docket management system web site, *http://dms.dot.gov.* It is available 24 hours each day, 365 days each year. Please follow the instructions online for more information and help.

Comment Period Extension

On March 11, 2002, the Air Carrier Association of America (ACAA), the Cargo Airline Association (CAA), the National Air Carrier Association (NACA) and the Regional Airline Association (RAA), filed a petition for a thirty (30) day extension of the comment period on TSA's Aviation Security Infrastructure Fee interim final rule (see 67 FR 7926, February 20, 2002). Although TSA believes that the comment period is adequate, TSA has decided to grant, in part, the petitioners' request for an extension and will extend the comment period for fifteen (15) days. The comment period will now end on April 2, 2002. This extension will allow the commercial airline industry and other interested entities or individuals additional time to complete their comments on the interim final rule.

Issued in Washington, DC, on March 18, 2002.

John W. Magaw,

Under Secretary of Transportation for Security.

[FR Doc. 02–6852 Filed 3–18–02; 1:59 pm]

BILLING CODE 4910–62–P

Notices

Federal Register
Vol. 67, No. 54
Wednesday, March 20, 2002

This section of the FEDERAL REGISTER contains documents other than rules or proposed rules that are applicable to the public. Notices of hearings and investigations, committee meetings, agency decisions and rulings, delegations of authority, filing of petitions and applications and agency statements of organization and functions are examples of documents appearing in this section.

ADVISORY COUNCIL ON HISTORIC PRESERVATION

Draft Program Comment Regarding the Management of Wherry and Capehart Era Army Family Housing

AGENCY: Advisory Council on Historic Preservation.

ACTION: Notice of intent to issue program comment on Capehart and Wherry Era army family housing.

SUMMARY: The Army is formulating its plan on how to manage its inventory of Capehart and Wherry Era housing. In order to better meet its Federal historic preservation responsibilities in managing these properties, the Army has requested the Advisory Council on Historic Preservation to comment on the overall management of such properties, as opposed to submitting each individual undertaking under such management to a separate review. The Council has drafted such a comment. It now seeks public input on that draft.

DATES: Submit comments on or before April 19, 2002.

ADDRESSES: Address all comments concerning this proposed program comment to Dave Berwick, Army Affairs Coordinator, Office of Federal Agency Programs, Advisory Council on Historic Preservation, 1100 Pennsylvania Avenue, NW., Suite 809, Washington, DC 20004. Fax (202) 606–8672. You may submit electronic comments to: *dberwick@achp. gov.*

FOR FURTHER INFORMATION CONTACT: Dave Berwick, (202) 606–8505.

SUPPLEMENTARY INFORMATION: Section 106 of the National Historic Preservation Act requires Federal agencies to consider the effects of their undertakings on historic properties and provide the Advisory Council on Historic Preservation (''Council'') a reasonable opportunity to comment with regard to such undertakings. The Council has issued the regulations that set forth the process through which Federal Agencies comply with these duties. Those regulations are codified under 36 CFR part 800 (''Section 106 regulations'').

Under § 800.14(e) of those regulations, agencies can request the Council to provide a ''Program Comment'' on a particular category of undertakings in lieu of conducting individual reviews of each individual undertaking under such category, as set forth in 36 CFR 800.4 through 800.6. An agency can then meet its Section 106 responsibilities for those undertakings by taking into account the Council's Program Comment and by following the steps set forth in those comments.

The Army has requested such a Program Comment to cover management of its Capehart and Wherry Era housing. A copy of the draft Program Comment can be found at the end of this notice. Once the public input resulting from this notice is considered, the Council will decide whether to issue a final Program Comment to the Army.

Background on the Capehart and Wherry Army Family Housing Program

Military housing constructed during the 1949–1962 period is commonly called Capehart and Wherry Era housing after the two United States Senators who sponsored national military housing construction programs to address inadequate and substandard military family housing at military installations across the nation. Senator Wherry's program, implemented 1949–1955, allowed developers to construct, own, and maintain military housing on Department of Defense (''DoD'') (in this case Army) lands with FHA-insured mortgages. DoD guaranteed occupancy, agreed to long-term leases, and discounted utility rates in exchange for the developer's agreement to established set rental rates and preferential leases for military families. Senator Capehart's program, implemented 1955–1962, called for DoD to purchase the new housing constructed by developers, and to purchase the developer-owned housing previously constructed under the Wherry housing program. DoD remained responsible for operation, maintenance and repair of this housing. Approximately 19,036 buildings constructed during the Capehart-Wherry Era remain in the Army's inventory of family housing.

Approximately 52% of the Army's entire military family housing stock remain from those built during the Capehart and Wherry military family housing construction program between 1949 and 1962. Structures associated with this family housing include detached garages, carports and storage buildings, and the landscape features (including but not limited to the overall design and layout of the Capehart and Wherry Era communities, including road patterns, plantings and landscaping, open spaces, playgrounds, parking areas, signage, site furnishings, views into and out of the community, lighting, sidewalks, setbacks and all other associated cultural landscape features). A small percentage of buildings and structures constructed during this time period were not constructed with funds provided through the Capehart and Wherry funding programs, but are similar in all other respects, and are therefore included as part of this action.

Capehart and Wherry Era buildings were largely constructed from off-the-shelf commercially available plans and specifications and range from single-family detached houses, to multi-unit row houses, duplexes, four-plexes, and multi-story apartment buildings. Brick, frame, cement block, and stucco were typical building materials. While architectural styles were largely consistent, there was some variation including elements of International style and Colonial Revival style. Developers, consistent with principles guiding civilian neighborhood design at the onset of the ''baby boom,'' paid attention to comprehensive neighborhood planning and design. Overall, the Army's Capehart and Wherry Era housing, associated structures, and landscape features reflect the ubiquitous, nation-wide suburban subdivision construction trends of this period.

The Army anticipates that all of it's Capehart-Wherry Era family housing, associated structures and landscape features will be subject to the following categories of undertakings: Maintenance and repair, rehabilitation, renovation, layaway and mothballing, demolition and replacement, and transfer, sale or lease out of government control. The Army is requesting that the Council provide a Program Comment on these categories of undertakings for Army

Capehart Wherry Era family housing, associated structures and landscape features.

The Army is requesting a Program Comment as an Army-wide Section 106 compliance action related to management of Capehart and Wherry era housing, associated structures and landscape features. This programmatic approach will facilitate management actions for privatization and transfer out of federal agency ownership, substantial alteration through renovation, and demolition and replacement of Capehart and Wherry Era housing, associated structures and landscape features that are listed or eligible for listing on the National Register of Historic Places. Therefore, there is the potential for adverse effects to historic properties.

The following is the full text of the draft Program Comment:

Program Comment for Capehart and Wherry Era Army Family Housing

I. Introduction

This Program Comment provides the Department of the Army (Army) with an alternate way to comply with its responsibilities under Section 106 of the National Historic Preservation Act with regard to the following actions in the management of the Capehart and Wherry Era Army family housing: privatization and transfer out of federal agency ownership, substantial alteration through renovation, and demolition and replacement of Capehart and Wherry Era housing, associated structures and landscape features that may be eligible for listing on the National Register of Historic Places.

II. Treatment of Capehart and Wherry Properties

a. Eligibility

The Army has conducted a historic context of its Capehart and Wherry properties. It is documented in a report entitled *For Want of a Home: A Historic Context for Wherry and Capehart Military Family Housing.* On May 22, 2001, the Army sponsored a symposium on Capehart and Wherry Era housing management as it relates to historic preservation. The symposium was attended by preservation experts, including the National Trust for Historic Preservation (Trust), the National Conference of State Historic Preservation Officers (NCSHPO), the Advisory Council on Historic Preservation, and nationally recognized experts in the field of historic preservation from academia and industry. Symposium participants recommended a programmatic approach to complying with Section 106, which is presented in the treatment section outlined below. The Army considers its inventory of Capehart and Wherry properties, including any associated structures and landscape features, to be eligible for the National Register of Historic Places for the purposes of Section 106 compliance.

b. Treatment

The Army has requested a Program Comment as an Army-wide Section 106 compliance action related to management of Capehart and Wherry Era housing, associated structures and landscape features. This programmatic approach will facilitate management actions for privatization and transfer out of Federal agency ownership, substantial alteration through renovation, and demolition and replacement of Capehart and Wherry Era housing, associated structures and landscape features. Such actions present a potential for adverse effects to historic properties.

Based on recommendations coming out of the symposium and follow-up meetings between the Council, the Trust and NCSHPO, the Army has proposed the following three step approach to the treatment of its Capehart and Wherry properties:

(i) The Army will expand and revise the existing historic context, *For Want of a Home: A Historic Context for Wherry and Capehart Military Family Housing.* Consistent with issues identified during the symposium on Capehart and Wherry Housing held by the Army in May 2001, and public review, the historic context will be expanded to address a number of important issues. It will explore changing Army family demographics following the end of the World War II and their impact on housing needs and responsive programs. The context will also focus on post-World War II suburbanization, housing trends and affordable housing programs in the civilian sector. In addition, the context will be expanded to consider the importance of historically important builders, developers and architects that may have been associated with design and construction of Capehart and Wherry Era housing developments at specific Army installations. In addition to addressing the housing units, the context will discuss associated structures, and landscape features. Finally, the context will describe the inventory of Capehart and Wherry Era Housing, providing information on the various types of buildings and architectural styles and the quantity of each.

(ii) The Army will develop Capehart and Wherry Era Neighborhood Design Guidelines. The scoping process identified landscape features as an important attribute of Capehart and Wherry Era land-use planning and development. Neighborhood Design Guidelines would address this issue and be distributed Army-wide. In this manner, Capehart and Wherry Era landscape features would be considered as the Army manages military family housing.

(iii) The Army will document Capehart and Wherry Era housing, associated structures and landscape features through preparation of a video. The video will document representative structural types and landscape features at three installations, and explain the relationship of this housing construction program to topics researched for the expanded historic context. The video will be distributed for educational purposes, and archived by the Army.

The Council believes that this three step approach will ensure that the Army takes into account the effects of management of its Capehart and Wherry Era housing.

III. Applicability

This Program Comment does not apply to the following properties that are listed, or eligible for listing, on the National Register of Historic Places: (a) Archeological sites, (b) properties of traditional religious and cultural significance to federally recognized Indian tribes or Native Hawaiian organizations, or (c) historic properties other than Army Capehart and Wherry Era housing, associated structures and landscape features.

IV. Effect of Program Comment

By following this comment and outlined three step approach, the Army will have met its responsibilities for compliance under Section 106 regarding management of its Capehart and Wherry Era housing. Accordingly, installations will not have to follow the case-by-case Section 106 review process for each individual management action.

The Army may carry out management actions prior to the completion of all of the three treatment steps outlined above, so long as such management actions do not preclude the eventual successful completion of those three steps.

If the Council determines that the consideration of Capehart and Wherry properties is not being carried out in a manner consistent with this Program Comment, the Council may withdraw this comment. Following such

withdrawal, the Army would comply with the requirements of 36 CFR §§ 800.3 through 800.7 for each individual management action.

Authority: 36 CFR 800.14(e).

Dated: March 15, 2002.

John M. Fowler,

Executive Director.

[FR Doc. 02–6706 Filed 3–19–02; 8:45 am]

BILLING CODE 4310–10–M

DEPARTMENT OF AGRICULTURE

Agricultural Marketing Service

[Docket Number FV–02–335]

United States Standards for Grades of Apple Juice from Concentrate

AGENCY: Agricultural Marketing Service, USDA.

ACTION: Reopening and extension of the comment period.

SUMMARY: Notice is hereby given that the comment period on the proposed notice to create a new United States Standard for Grades of Apple Juice from Concentrate is reopened and extended.

DATES: Comments may be submitted on or before April 19, 2002.

ADDRESSES: Written comments may be submitted to: Lydia E. Berry, Processed Products Branch, Fruit and Vegetable Programs, Agricultural Marketing Service, U.S. Department of Agriculture, STOP 0247, 1400 Independence Avenue, SW., Washington, DC 20250–0247; fax (202) 690–1087; or e-mail *lydia.berry@usda.gov.* Comments should reference the date and page of this issue of the **Federal Register**. All comments received will be made available for public inspection at the address listed above during regular business hours and on the Internet.

The draft of the United States Standards for Grades of Apple Juice from Concentrate is available either through the address cited above or by accessing the AMS Home Page on the Internet at: *www.ams.usda.gov/fv/ppb.html.* Any comments received, regarding this proposed standard will also be posted on that site.

FOR FURTHER INFORMATION CONTACT: Lydia E. Berry at (202) 720–5021 or e-mail at lydia.berry@usda.gov.

SUPPLEMENTARY INFORMATION: A notice was published in the **Federal Register** (66 FR 58430 to 58431; November 21, 2001) requesting comments on a proposal to create a United States Standard for Grades of Apple Juice From Concentrate. The action would create grade standards for apple juice from concentrate that will include a description of the product, style, grades, ascertaining the grade by sample, and ascertaining the grade by lot. The proposed standard would provide a common language for trade, a means of measuring value in the marketing of apple juice from concentrate, and provide guidance in the effective utilization of apple juice from concentrate.

Congressional representatives representing a major apple producing area requested that additional time be provided for interested persons to comment on the proposed standard. The Congressmen believe that extending the comment period will enable the many growers and processors in their districts that have voiced their concern to their offices to respond to our solicitation for comments.

After reviewing the request, the Department is reopening and extending the common period in order to allow sufficient time for all interested persons to file comments.

This notice provides for a 30 day comment period for interested parties to comment on changes to the standards.

Dated: March 14, 2002.

A.J. Yates,

Administrator, Agricultural Marketing Services.

[FR Doc. 02–6691 Filed 3–19–02; 8:45 am]

BILLING CODE 3410–02–M

DEPARTMENT OF AGRICULTURE

Forest Service

Lost Cabin Mine, Medicine Bow-Routt National Forests, Carbon County, WY

AGENCY: Forest Service, USDA.

ACTION: Notice of intent to prepare an environmental impact statement.

SUMMARY: The Forest Service will prepare an Environmental Impact Statement (EIS) to assess and disclose the environmental effects of lode and placer exploration at the Lost Cabin Mine. The Lost Cabin Mine is located in Township 14 North, Range 86 West, Sections 1 and 12 in Carbon County, Wyoming. Mining operations would include repairing three existing shafts and obtaining ore samples from four un-patented lode claims. A small loader and track-hoe would be used to obtain the samples, and samples would be crushed on-site and transported from the area using four-wheel and six-wheel all terrain vehicles (ATV's). Approximately 1.6 miles of an existing, closed road (Way 4170) that historically accessed the mine area would need to be widened and repaired to allow access to the site. Roughly ⅛ mile of road would also need to be constructed to link the four un-patented lode claim sites.

An historical search of Government Land Office plats indicate that a ''wood road'' accessed the mine site as early as 1899. By 1901, an ''improved road'' that accessed Vulcan Mountain from Saratoga, Wyoming was in place. This road also provided a direct link with the Southern Wyoming Tramway which carried mined ore to a smelter in Encampment, Wyoming. It further provided access to other major mining communities in the near vicinity. Although the road is depicted on Forest Service maps through 1956, more recent maps do not indicate that it is still a part of the Forest Transportation System.

The Lost Cabin Mine is located in the Mowry Peak inventoried roadless area, as described in Appendix G to the Final EIS for the Medicine Bow National Forest Land and Resource Management Plan. If the project is approved as proposed, the proponent would be allowed to widen and repair two miles of an existing, closed road and construct roughly ⅛ mile of road within the roadless area boundary. The EIS will comply with the requirements of the National Environmental Policy Act (42 U.S.C. sections 4321–4370a), the National Forest Management Act (16 U.S.C. 1600–1614), and the U.S. Mining Laws (30 U.S.C. 21–54), and their implementing regulations.

PROJECT PURPOSE: The purpose of the Lost Cabin Mine analysis is to determine how the surface use connected with operations authorized by the United States mining laws (30 U.S.C. 21–54), which grant a statutory right to enter upon public lands to search for mineral deposits, shall be conducted to minimize adverse environmental impacts on National Forest System surface resources. It is not the purpose of the analysis to determine management of mineral resources. The responsibility for that determination lies with the Secretary of the Interior.

DATES: Comments concerning the proposal and the scope of the analysis will be accepted and considered at any time after publication of this notice in the **Federal Register** and prior to a decision being made. All comments and suggestions are welcome.

ADDRESSES: Send written comments to Melissa Martin, Medicine Bow-Routt National Forest Supervisor's Office, 2468 Jackson Street, Wyoming 82070. Electronic mail (e-mail) may be sent to *mmmartin@fs.fed.us* and FAX may be

sent to (307) 745–1398. Telephone: (307) 745–2371.

FOR FURTHER INFORMATION CONTACT: Tom Florich, Recreation and Lands Program Manager, Medicine Bow-Routt National Forests, 2468 Jackson Street, Laramie, Wyoming, 82070. Telephone: (307) 745–2435.

SUPPLEMENTARY INFORMATION:

Decision To Be Made

The Responsible Official will consider the results of the analysis and its findings and then document the final decision in a Record of Decision (ROD). The decision will include a determination as to where and under what terms and conditions the proponent may access the Lost Cabin Mine while also protecting the surface natural resources in the area and providing for public safety.

Responsible Official

Rick Cables, Regional Forester, USDA Forest Service, Rocky Mountain Region, 740 Simms Street, Golden, Colorado 80401 is the official responsible for making the decision on this action. He will document his decision and rationale in a Record of Decision.

Preliminary Issues

Proposed construction/reconstruction of access roads to the lode sites could alter the character of the Mowry Peak roadless area.

Public Involvement

Public scoping describing the Plan of Operations associated with the Lost Cabin Mine was initiated on January 7, 2002, and 17 comment letters were received. All comments received from the January 7, 2002 scoping effort will be combined with comments received as a result of this Notice of Intent. Comments from both scoping efforts will be reviewed to identify potential issues for this analysis. Since the previously received comments will be incorporated into this analysis, individuals who responded to the January 7, 2002 scoping request need to provide comments at this time only if they wish to provide additional information to what they previously submitted. While comments are welcome at any time, comments received within 30 days of the publication of this notice in the **Federal Register** will be most useful for the identification of issues and the analysis of alternatives. As previously mentioned, comments may be sent by electronic mail (e-mail) to *mmmartin@fs.fed.us.* Written comments may be mailed to the Medicine Bow-Routt National Forests, 2468 Jackson Street, Laramie, Wyoming 82070, attention: Melissa Martin. Please reference the *Lost Cabin Mine EIS* on the subject line. The name and mailing address of the commenter should be provided with their comments so that future documents pertaining to this environmental analysis and the decision can be provided to interested parties.

Estimated Dates for Filing

The draft EIS is expected to be filed with the Environmental Protection Agency (EPA) and available for public review during July, 2002. At that time, the EPA will publish a Notice of Availability (NOA) of the draft EIS in the **Federal Register**. The comment period on the draft EIS will be for a period of not less than 45 days from the date the EPA publishes the NOA in the **Federal Register**. It is important that those interested in the management of this area to comment at that time. The final EIS is expected to be available in October 2002. In the final EIS, the Forest Service will respond to any comments received during the public comment period that pertain to the environmental analysis. Those comments and the Forest Service responses will be disclosed and discussed in the final EIS and will be considered when the final decision about this proposal is made.

Release of Names

Comments received in response to this solicitation, including names and addresses of those who comment, will be considered part of the public record on this Proposed Action and will be available for public inspection. Comments submitted anonymously will be accepted and considered; however, those who submit anonymous comments will not have standing to appeal the subsequent decision under 36 CFR parts 215 or 217. Additionally, pursuant to 7 CFR 1.27 (d), any person may request the agency to withhold a submission from the public record by showing how the Freedom of Information Act (FOIA) permits such confidentiality. Persons requesting such confidentiality should be aware that, under the FOIA, confidentiality may be granted in only very limited circumstances, such as to protect trade secrets. The Forest Service will inform the requester of the agency's decision regarding the request for confidentiality, and where the request is denied, the agency will return the submission and notify the requester that the comments may be resubmitted with or without name and address within ten (10) days.

The Public's Obligation To Comment

The Forest Service believes it is important to give reviewers an early notice of several court rulings related to public participation in the environmental review process. First, reviewers of draft EIS's must structure their participation in the environmental review of the proposal so that it is meaningful and alerts an agency to the reviewer's position and contentions. *Vermont Yankee Nuclear Power Corp.* v. *NRDC,* 435 U.S. 519, 553 (1978). Also, environmental objections that could be raised during the draft EIS stage, but are not raised until after completion of the final EIS, may be waived or dismissed by the courts. *City of Angoon* v. *Hodel,* 803 F.2d 1016, 1022 (9th Cir. 1986) and *Wisconsin Heritages, Inc.* v. *Harris,* 490 F. Supp. 1334, 1338 (E.D. Wis. 1980). As a result of these previous court rulings, it is very important that those interested in this proposed action participate by the close of the 45-day comment period so that substantive comments and objections are made available to the Forest Service at a time when it can meaningfully consider them and respond to them in the final EIS. To assist the Forest Service in identifying and considering issues and concerns related to the proposed action, comments on this draft EIS should be as specific as possible. It is also helpful if comments refer to specific pages or chapters of the draft document. Comments may also address the adequacy of the Draft Environmental Impact Statement or the merits of the alternatives displayed in the document. Reviewers should refer to the Council on Environmental Quality Regulations at 40 CFR 1503.3 for implementing the procedural provisions of the National Environmental Policy Act for addressing these points. Please note that any comments that are submitted in relation to this draft EIS will be considered public information.

Dated: March 12, 2002.

Rick Cables,

Regional Forester.

[FR Doc. 02–6674 Filed 3–19–02; 8:45 am]

BILLING CODE 3410–GM–P

DEPARTMENT OF AGRICULTURE

Forest Service

Revised Land and Resource Management Plan for the Shawnee National Forest (Alexander, Gallatin, Hardin, Jackson, Johnson, Massac, Pope, Saline, Williamson, and Union Counties, IL)

AGENCY: Forest Service, USDA.

ACTION: Notice of Intent to prepare Environmental Impact Statement (EIS).

SUMMARY: The USDA Forest Service intends to prepare an EIS for revising the Shawnee National Forest Land and Resource Management Plan (Forest Plan) pursuant to 16 U.S.C. 1604(f)(5) and USDA Forest Service National Forest System Land and Resource Management Planning regulations. The revised Forest Plan will supersede the Forest Plan, which the Regional Forester approved November 24, 1986, and the significant amendment approved May 14, 1992. This Notice describes the focus areas of change, the estimated dates for filing the EIS, the information concerning public participation, and the names and addresses of the responsible agency official and the individual who can provide additional information.

DATES: We need to receive your comments on this Notice of Intent (NOI) in writing within 60 days after this notice is published in the **Federal Register**. The Draft EIS should be available for public review by December 2003. The Final EIS and revised Forest Plan should be completed by September 2004.

ADDRESSES: Send written comments to: NOI–FP Revision, Shawnee National Forest, 50 Hwy. 145 South, Harrisburg, IL 62946. Or direct electronic mail to *mlross@fs.fed.us* Attn: Forest Plan Revision.

FOR FURTHER INFORMATION CONTACT: Forest Planner, at 618–253–7114. TDY 618–253–1070, or direct electronic mail to: *mlross@fs.fed.us* or access the Forest web page at *www.fs.fed.us/r9/shawnee.*

RESPONSIBLE OFFICIAL: Regional Forester, Eastern Region, 310 W. Wisconsin Ave, Milwaukee, Wisconsin 53203.

SUPPLEMENTARY INFORMATION: The Regional Forester for the Eastern Region gives notice of the agency's intent to prepare an EIS to revise the Shawnee National Forest Plan. The Regional Forester approved the original Shawnee National Forest Plan in November 1986. In May 1992, the Regional Forester approved a significant amendment that substantially replaced the 1986 Forest Plan. This plan guides the overall management of the Shawnee National Forest. We make six primary decisions in the Forest Plan:

1. Forest-wide multiple-use goals and objectives;
2. Forest-wide management requirement;
3. Management area direction;
4. Lands suited and not suited for resource use and production (timber management, etc.);
5. Monitoring and evaluation requirements; and
6. Recommendations to Congress (such as wilderness), if any.

By the requirements of the National Forest Management Act, national forests must revise the Forest Plan every 10–15 years (U.S.C. 1604(f)(5)). At this time, there are three reasons to revise the 1986 and 1992 Amended Forest Plans: (1) The National Forest Management Act of 1976 requires that such plans be revised every 10–15 years (the Regional Forester approved the original Shawnee National Forest Plan in November 1986 and approved the Amended Shawnee National Forest Plan in May 1992); (2) Court direction for additional analysis of certain portions of the 1992 Amended Forest Plan; and (3) agency goals and objectives, along with other national guidance for strategic plans and programs, have changed; The agency Government Performance and Results Act Strategic Plan (2000) has shifted the course of agency program emphasis to sustainability.

In many southern Illinois communities, people value the opportunities public forests provide for enjoying recreation, solitude, nature study, and scenic beauty. People also expect important products from managed forests, such as game species for hunting, commercial recreation events, wood products, and minerals. The Shawnee National Forest is integral to the sense of place for communities across southern Illinois. When making decisions in the revised plan, we would examine economic and social impacts to local communities and at a broader regional level, as well as biological impacts.

We propose to focus our analysis on topics identified as being most critically in need of change. These were identified through public comment and monitoring and evaluation.

Plan Opportunities, Goals and Objectives: We propose changing the Forest Plan's opportunities, goals and objectives by changing the timber resource management goal to a goal for promoting forest ecosystem health and sustainability. This would also result in changes to Forest Plan objectives and standards and guidelines related to timber resource management.

Revision Topics:

1. Watershed Resources,
2. Biological Diversity and Wildlife/Aquatic Habitat;
3. Recreation Management;
4. Forest Ecosystem Health and Sustainability;
5. Mineral Resources;
6. Wilderness, Roadless Areas, Wild and Scenic Rivers; and
7. Land Ownership Adjustment.

Additional detail on the revision topics is available on request, in the form of the document titled ''Need for Change, Description of Proposal for Revising the Forest Plan of the Shawnee National Forest''. You are encouraged to review this additional document before commenting on the NOI. You may request the additional information by calling the phone number listed above, by writing or e-mailing to the addresses listed in this notice, or by accessing the Forest web page at *www.fs.fed.us/r9/shawnee.*

We propose the following direction or actions for each topic:

1. Watershed Resources:

- Develop a management prescription 6.2 and standards and guidelines for Inahgeh lands and other lands on the historic Mississippi River floodplain;
- Develop a management prescription 6.1 for priority watersheds that provide local drinking water supplies;
- Establish criteria for prioritizing watershed protection and restoration; and
- Review and update the riparian area filterstrip standards and guidelines (6.3 management prescription).

2. Biological Diversity, Wildlife and Aquatic Habitat:

- Refine management direction for forest interior birds;
- Create a 6.7 management prescription for large openland habitat;
- Review Forest-wide standards and guidelines for wildlife opening management;
- Revise standards and guidelines for threatened and endangered species and other species of concern;
- Identify and protect ecosystems at risk of loss or degradation;
- Develop criteria for control of invasive species that are presently degrading native ecosystems;
- Modify current list of Management Indicator Species to represent all communities;
- Develop management area prescriptions and standards and guidelines for habitat restoration in Inahgeh lands;
- Adjust the boundary of the 1.3 management area at Oakwood Bottoms

Greentree Reservoir to include recently acquired adjacent forested lands;

• Revise the standards and guidelines pertaining to pesticide use for fish and wildlife management purposes; and

• Review list of species of recreation interest.

3. Recreation Management:

• Expand recreation management goal to include providing a comprehensive system of designated trails that are marked, mapped, designed, and maintained for all season use;

• Restrict equestrian use to system trails and to roads open to vehicular travel;

• Eliminate the Amended Forest Plan map pertaining to ATV/OHM travelways and hiker/equestrian trail corridors;

• Allow ATV/OHM use for access to National Forest land on selected Forest System roads (primarily lower standard local system roads) and close those roads to use by vehicles over 50 inches wide;

• The ATV Access Permit for people with disabilities will be discontinued because all users will be allowed to access the Forest using ATV/OHM's on certain roads;

• Allow mountain bike use on open roads and on designated trails, and provide for links to the rails-to-trails system, where available;

• Revise recreation goal statement to include both developed and dispersed recreation management, emphasizing increased benefits to the public and cost-effective operation. Provide direction to evaluate continued operation of low use or high unit cost recreation areas, and provide direction for new recreation developments; and

• Convert visual management direction from the Visual Management System to the new national Scenery Management System.

4. Forest Ecosystem Health and Sustainability:

• Replace the timber resource management goal with a goal to provide for and enhance forest ecosystem health and sustainability;

• The land base suitable for timber production and the associated allowable sale quantity will be re-evaluated;

• Revise timber management objectives and standards and guidelines;

• Maintain a dominance of oak-hickory in management areas 1.3, 2.1, and 6.6. Add an oak-hickory objective for other management areas based on historic occurrence and ecological landtypes;

• Drop objective for range management except for research purposes;

• Subdivide the 2.1 and 6.6 management areas to reflect differences along ecological boundaries;

• Change management area designation of Fountain Bluff and Iron Mountain from 8.3 to 6.6, to allow for active vegetation management, while providing for protection of heritage resources;

• Revise the standards and guidelines pertaining to pesticide use; and

• Address the control of invasive species and noxious weeds through Forest-wide standards and guidelines.

5. Mineral Resources:

• Decide on suitability and availability regarding oil and gas leasing. No decision will be made on consent to lease at the Forest Plan level; and

• With regard to other direction on oil, gas, and other minerals, no change will be made in the Amended Plan.

6. Wilderness, Roadless Areas, Wild and Scenic Rivers:

• Based on the results of a Forest-wide roadless area analysis, recommendations to Congress for wilderness may be developed;

• Develop appropriate management prescriptions for the Camp Hutchins area and the inventoried roadless area known as Burke Branch and other roadless areas if they are not recommended for wilderness designation;

• Modify standards and guidelines for 5.1 management prescription based on the physical and social issues regarding wilderness, as identified during the Forest Plan revision process;

• Delete 5.2 management area designations;

• Increase the allowable system trail densities in wilderness to a maximum of 2 miles of trail per square mile.

• Formulate management area standards and guidelines for cemetery access and maintenance in wilderness; and

• Complete the classification process of the six streams eligible for study as part of the Wild and Scenic River System, and revise the 9.2 management prescription standards and guidelines to reflect the results of the classification process. If any additional rivers are identified for potential wild and scenic river designation, we will determine their eligibility and highest potential classification.

7. Land Adjustment:

• Revise prioritization list standard and guideline for surface ownership to include the 6.6 management prescription, remove the 5.2 management prescription, and incorporate other management prescriptions that may be identified;

• Recommend a boundary adjustment that incorporates portions of the Mississippi River floodplain into the proclamation boundary and eliminates portions of the proclamation boundary where additional acquistion is not likely;

• Eliminate the Forest Consolidation Map;

• Emphasize acquisition of all available property rights in each land adjustment case; and

• Provide recommendation for statutory boundary adjustment.

New Planning Regulations: The Department of Agriculture published new planning regulations in November of 2000. Concerns regarding the ability to implement these regulations prompted a review with probable revision of these regulations. On May 10, 2001 USDA Secretary Veneman signed an interim final rule extending for one year the May 9, 2001 date by which all land and resource management plan amendments and revisions will be subject to the requirements of the new planning rule adopted November 9, 2000. The interim rule provides that May 9, 2002 a responsible official may elect to continue or to initiate new plan amendments or revisions under the 1982 planning regulations or that the responsible official may initiate amendments or revisions under the new planning rule. The Shawnee National Forest will proceed under the 1982 planning regulations.

Range of Alternatives: We will consider a range of alternatives when revising the Forest Plan. The alternatives will address different options to resolve issues over the focus areas of change listed above and to fulfill the purpose and need. A ''no-action alternative'' is required, meaning that management would continue under the existing Forest Plan. Alternatives will provide different ways to address and respond to issues identified during the scoping process.

The alternatives will display different mixes of recreation opportunities and experiences. Alternatives will display different mixes of wildlife habitats across the forest. The mix will vary by the objectives of the particular alternative, though each alternative will strive to provide habitat necessary to maintain viable populations of plant and animal species. We will analyze alternatives that examine different levels of vegetation management, including more and less timber harvest. Management of roadless areas will vary by the objectives of any particular alternative, physical criteria for

evaluating each individual roadless area, and public input.

We may make other minor changes, particularly in the guidance chapter of the Forest Plan, to reflect changes made when addressing the above revision topics.

Inviting Public Participation: We are now soliciting comments and suggestions from federal agencies, state and local governments, individuals, and organizations on the scope of the analysis to be included in the DEIS for the revised Forest Plan (40 CFR 1501.7). Comments should focus on: (1) The proposal for revising the Forest Plan; (2) possible alternatives for addressing issues associated with the proposal; and (3) identify any possible impacts associated with the proposal based on an individual's civil rights (race, color, national origin, age, religion, gender, disability, political beliefs, sexual orientation, marital or family status). We will encourage public participation in the environmental analysis and decision-making process.

In spring 2002 we are releasing our NOI and proposal. We will have many types of public involvement including 60-day formal comment period, public meetings, written comments, website, and e-mail.

Following publication of this NOI, the Forest Service will host a series of public meetings to (1) Establish multiple opportunities for the public to generate ideas, concerns, and alternatives, (2) present and clarify proposed changes to the Forest Plan; (3) describe ways that individuals can respond to this NOI; and (4) accept comments from the public on this proposal for revising the Forest Plan.

In the year 2002 we will work on alternative development and issue validation. We will have many types of public involvement including: public workshops, collaborative meetings, written comments, website, and e-mail.

In the year 2003 we will release our proposed revised Forest Plan and DEIS. We will have many types of public involvement including 90-day formal comment period, public meetings, and written comments.

During 2004 we will release the decision, final revised Forest Plan, EIS, and Record of Decision. We will have informational meetings to explain the decisions on the final Forest Plan.

We will provide the public with general notice on opportunities to participate through mailings, news releases, public meetings, and website (www.fs.fed.us/r9/shawnee). In addition to formal opportunities for public comment, we will consider comments received at any time throughout the revision process.

The Shawnee National Forest will host five open house meetings to (1) answer specific questions relative to the NOI and (2) provide information on how to comment on the NOI and to accept written comments from the public. All information shared by the Forest Service will be identical at each meeting. Following is a schedule of the meetings.

April 2, 2002: 2:00–7:00 p.m	Eddyville Community Center, Eddyville, IL 62928.
April 3, 2002: 2:00–7:00 p.m	Ralph Metcalf Federal Building, 77 West Jackson Blvd., Chicago, IL 60404.
April 4, 2002: 2:00–7:00 p.m	Fisher's Hotel and Conference Center, 2100 West Main St., Belleville, IL 62226.
April 10, 2002: 2:00–7:00 p.m	Executive Inn Evansville, 600 Walnut St., Evansville, IN 47708.
April 11, 2002: 2:00–7:00 p.m	Travelodge & Convention Center, 2600 West DeYoung, Marion, IL 62959.

Availability of Public Comment

Comments received in response to this solicitation, including names and addresses of those who comment, will be considered part of the public record for this proposed action and will be available for public inspection. Comments submitted anonymously will be accepted and considered. However, those who submit anonymous comments will not have standing to appeal the subsequent decisions under 36 CFR parts 215 or 217.

Additionally, pursuant to 7 CFR 1.27(d), any person may request the agency to withhold a submission from the public record by showing how the Freedom of Information Act (FOIA) permits such confidentiality. Persons requesting such confidentiality should be aware that under FOIA, confidentiality may be granted in only very limited circumstances, such as to protect trade secrets.

The Forest Service will inform the requester of the agency's decision regarding the request for confidentiality and when the requester is denied, the agency will return the submission and notify the requester that the comments may be resubmitted with or without name and address within 90 days.

Release and Review of the DEIS

The DEIS is expected to be filed with the Environmental Protection Agency (EPA) and to be available for public comment in 2003. At that time, the EPA will publish a Notice of Availability in the **Federal Register.** The comment period on the DEIS will be 90 days from the date the EPA publishes the Notice of Availability in the **Federal Register.**

The Forest Service believes it is important to give reviewers notice of several court rulings related to public participation in the environmental review process. First, reviewers of DEIS's must structure their participation in the environmental review of the proposal so that it is meaningful and alerts an agency to reviewer's position and contentions [*Vermont Yankee Nuclear Poser Corp.* v. *NRDS, 435 U.S. 519, 553 (1978)*]. Also, environmental objections that could be raised at the DEIS stage but that are not raised until after completion of the final EIS may be waived or dismissed by the courts (City of Angoon v. Hodel, 803 F.2d 1016, 1022 (9th cir. 1986) and Wisconsin Heritages, Inc. v. Harris, 490 F. Supp. 1334, 1338 (E.D. Wis. 1980). Because of these court rulings it is very important that those interested in this proposed action participate by the close of the 90-day comment period so substantive comments and objections are made available to the Forest Service at a time when it can meaningfully consider them and respond to them in the final EIS.

To assist the Federal Service in identifying and considering issues and concerns on the proposed action, comments on the DEIS should be as specific as possible. It is also helpful if comments refer to specific pages or chapters of the DEIS. Comments may also address the adequacy of the DEIS or the merits of the alternatives formulated and discussed in the statement. Reviews may wish to refer to

the Council of Environmental Quality Regulations (*http://ceq.eh.doe.gov/nepa/nepanet.htm*) for implementing the procedural provision of he National Environmental Policy Act at 40 CFR 1503.3 in addressing these points.

Dated: March 12, 2002.

Donald L. Meyer,

Acting Regional Forester.

[FR Doc. 02–6678 Filed 3–19–02; 8:45 am]

BILLING CODE 3410–11–M

DEPARTMENT OF AGRICULTURE

Forest Service

West Bear Vegetation Management Project; Wasatch-Cache National Forest, Summit County, UT

AGENCY: Forest Service, USDA.

ACTION: Notice of intent to prepare environmental impact statement.

SUMMARY: The Forest Supervisor of the Wasatch-Cache National Forest gives notice of the agency's intent to prepare an environmental impact statement on a proposal to manage forest vegetation in the Bear River drainage. The headwaters of this drainage are located on the west end of the Evanston Ranger District and are located in Utah about 35 miles south of Evanston, Wyoming in the Uinta Mountain Range. The portion of this drainage this is National Forest land and is being considered for treatment contains approximately 13,000 acres, primarily in the West Fork of the Bear River drainage.

The proposed action was developed to address some of the opportunities identified in the West Fork Bear River Assessment. It includes silvicultural treatments to restore forest age class diversity, species composition, and forest stand structure. These proposed treatments included the use of prescribed fire as well as timber harvest. New roads would be constructed to provide access for timber harvest in portions of the area. The volume of timber and amount of new road construction will likely vary among alternatives. The proposal also includes reconstruction or relocation of some poorly located existing roads and improvement or rehabilitation of some existing dispersed recreation sites in the area.

The purpose of and need for this proposal includes the following:

1. To restore forest age class diversity, species composition, and forest stand structure that were likely to have occurred historically in this drainage. Fire suppression and past timber harvesting have resulted in prevalence of mature and old forest in portions of the area, forest succession from seral species to subalpine fir, and dense forest stand conditions not consistent with the historic range of conditions. These conditions have adverse effects on habitat for some wildlife species as well increasing the risk of forest insect epidemics. The project would restore balance to forest conditions reducing the effects of past human activities on some species of wildlife and maintain or rector properly functioning conditions to forest lands in the area.

2. To reduce adverse environmental effects of the existing road system. Many of the roads in this drainage constructed or developed prior to the 1970's are poorly located and designed. Portions need to be relocated or redesigned to reduce sediment delivery to stream channels.

3. To provide timber for harvest from suitable lands contributing opportunities for industry and communities in Utah and Wyoming that are dependent on national forest timber for a portion of their supply and economy.

4. To improve and maintain or/rehabilitate existing dispersed campsites. Some of the dispersed campsites that have developed over the years are on poor locations with poor access roads. There is a need to harden or redesign some sites and to close and rehabilitate other sites and decommission improperly located access roads to reduce damage to soils, vegetation, and streams.

The Forest Service invites comments and suggestions on the scope of the analysis to be included in the draft environmental impact statement (DEIS). In addition, the Forest Service gives notice that it is beginning a full environmental analysis and decision-making process for this proposal so that interested or affected people may know how they can participate in the environmental analysis and contribute to the final decision. The first public ''scoping'' open house is scheduled for March 28, 2002, in Evanston, Wyoming, at the Historic Railroad Depot on front Street in Evanston, Wyoming, from 4:00 to 7:00 P.M. The purpose of this open house is to learn what issues members of the public or interested agencies believe are involved in the proposal. Knowledge of the issues will help establish the scope of the Forest Service environmental analysis and define the kind and range of alternatives to be considered. Forest Service officials wild describe and explain the proposed actions and the process of environmental analysis and disclosure to be followed in evaluating this proposal. The Forest Service welcomes any public comments on the proposal.

DATES: Comments concerning the scope of the analysis should be received in writing by April 19, 2002.

ADDRESSES: Send written comments to Stephen Ryberg, District Ranger, Evanston, WY 82930.

FOR FURTHER INFORMATION CONTACT: Larry Johnson, Environmental Planner, (307) 789–3194, or Kent O'Dell, Timber Management Coordinator, (307) 782–6555.

SUPPLEMENTARY INFORMATION: The proposal to manage forest vegetation in the Bear River drainage includes timber harvesting, prescribed burning, construction and reconstruction of roads, and hardening, rehabilitating or relocating dispersed campsites and their access roads. There are a variety of forest cover types in this drainage, including spruce/fir, mixed conifer, lodgepole pine, mixed conifer and aspen, and pure aspen. Proposed silvicultural prescriptions include selective management in the spruce/fir and mixed conifer, thinning and small patch cuts in the lodgepole pine, and conifer removal combined with prescribed fire in the mixed conifer/aspen and pure aspen forest cover types.

Proposed new road construction would be limited to that needed for access for management activities. Most of these roads would be closed or decommissioned following management activities. Several of these roads may be opened for public use to replace existing roads that would be decommissioned. There is no proposed road construction in inventoried roadless areas.

Proposed reconstruction or relocation of existing roads would emphasize improving design of the roads near stream crossings and relocating or improving drainage where the roads are near stream channels.

Proposed hardening, redesign, or relocation of dispersed campsites and their access roads would be emphasized where these sites or their access roads are resulting in soil erosion, especially near water bodies.

The decision to be made is whether to implement the proposed activities listed above.

The Wasatch-Cache National Forest Land and Resource Management Plan provides standards and guides for forest and road management. This direction is located in Chapter IV under the Whitney Management Area and under Forest-wide Standards and Guides. The proposed action is consistent with the Forest Plan.

A U.S. Army Corps of Engineers ''404 Permit'' for dredging and filling waters

and/or wetlands will be required for any road work in stream channels or riparian areas. A determination of effects on Canada lynx will be required from the U.S. Fish and Wildlife Service. The Forest Service will request the U.S. Army Corps and U.S. Fish and Wildlife Service to cooperate in the environmental analysis, and may request cooperation from other State or Federal agencies.

The Deciding Official will be Tom Tidwell, Forest Supervisor, Wasatch-Cache National Forest, 8236 Federal Building, 125 South State Street, Salt Lake City, UT 84138.

A draft environmental impact statement is expected to be published in 2002, with public comment on the draft material requested for a period of 45 days, and completion of a final environmental impact statement later in 2002.

The 45 day public comment period on the draft environmental impact statement will commence on the day the Environmental Protection Agency publishes a ''Notice of Availability'' in the **Federal Register**.

The Forest Service believes it is important to give reviewers notice at this early stage of several court rulings related to public participation in the environmental review process. First, reviewers of draft environmental impact statements must structure their participation in the environmental review of the proposed so that it is meaningful and alerts an agency to the reviewer's position and contentions. *Vermont Yankee Nuclear Power Corp.* v. *NRDC, 435 U.S. 519, 553 (1978).* Also, environmental objections that could be raised at the draft environmental impact statement stage but that are not raised until after completion of the final environmental impact statement may be waived or dismissed by the courts. *City of Angoon* v. *Hodel*, 803 F.2d 1016, 1022 (9th Cir. 1986) and *Wisconsin Heritages, Inc.* v. *Harris*, 490 F. Supp. 1334, 1338 (E.D. Wis. 1980). Because of these court rulings, it is very important that those interested in this proposed action participate by the close of the 45-day comment period so that substantive comments and objections are made available to the Forest Service at a time when it can meaningfully consider them and respond to them in the final environmental impact statement.

To assist the Forest Service in identifying and considering issues and concerns on the proposed action, comments on the draft environmental impact statement should be as specific as possible. It is also helpful if comments refer to specific pages or chapters of the draft statement. Comments may also address the adequacy of the draft environmental impact statement or the merits of the alternatives formulated and discussed in the statement. (Reviewers may wish to refer to the Council on Environmental Quality Regulations for implementing the procedural provisions of the National Environmental Policy Act at 40 CFR 1503.3 in addressing these points.) Please note that comments you make on the draft environmental impact statement will be regarded as public information.

Dated: March 14, 2002.

Tom Tidwell,

Forest Supervisor.

[FR Doc. 02–6677 Filed 3–19–02; 8:45 am]

BILLING CODE 34210–11–M

DEPARTMENT OF AGRICULTURE

Opal Creek Scenic Recreation Area (SRA) Advisory Council; Meeting

AGENCY: Forest Service, USDA.

ACTION: Notice of meeting.

SUMMARY: An Opal Creek Scenic Recreation Area Advisory Council meeting will convene in Stayton, Oregon on Monday, April 1, 2002. The meeting is scheduled to begin at 6 p.m., and will conclude at approximately 8:30 p.m. The meeting will be held in the South Room of the Stayton Community Center located on 400 West Virginia Street in Stayton, Oregon.

The Opal Creek Wilderness and Opal Creek Scenic Recreation Area Act of 1996 (Opal Creek Act) (Pub. L. 104–208) directed the Secretary of Agriculture to establish the Opal Creek Scenic Recreation Area Advisory Council. The Advisory Council is comprised of thirteen members representing state, county and city governments, and representatives of various organizations, which include mining industry, environmental organizations, inholders in Opal Creek Scenic Recreation Area, economic development, Indian tribes, adjacent landowners and recreation interests. The council provides advice to the Secretary of Agriculture on preparation of a comprehensive Opal Creek Management Plan for the SRA, and consults on a periodic and regular basis on the management of the area. Tentative agenda items include the following topics:

Discussion of the decision for the Opal Creek SRA Environmental Analysis;

Transition of the Council membership in accordance with provisions of the Council Charter;

Creating a to-do list of future topics the Council will deal with;

A direct public comment period is tentatively scheduled to begin at 8 p.m. Time allotted for individual presentations will be limited to 3 minutes. Written comments are encouraged, particularly if the material cannot be presented within the time limits of the comment period. Written comments may be submitted prior to the April 1 meeting by sending them to Designated Federal Official Stephanie Phillips at the address given below.

FOR FURTHER INFORMATION CONTACT: For more information regarding this meeting, contact Designated Federal Official Stephanie Phillips; Willamette National Forest, Detroit Ranger District, HC 73 Box 320, Mill City, OR 97360; (503) 854–3366.

Dated: March 14, 2002.

Y. Robert Iwamoto,

Acting Forest Supervisor.

[FR Doc. 02–6673 Filed 3–19–02; 8:45 am]

BILLING CODE 3410–11–M

DEPARTMENT OF AGRICULTURE

Forest Service

Oregon Coast Provincial Advisory Committee Meeting

AGENCY: Forest Service, USDA.

ACTION: Notice of meeting.

SUMMARY: The Oregon Coast provincial Advisory Committee (PAC) will meet on April 11, 2002. The meeting will begin at 9 a.m., in the Cape Perpetua Visitor's Center, 2400 Highway 101, Yachats, Oregon. Agenda items, with a theme of ''aquatic issues,'' will include: FS/BLM process to establish priority watersheds; locations of priority watersheds; restoration results on the BLM Nestucca and FS Knowles Creek projects; pre-commercial thinning obstacles; barriers to upland restoration; local jobs created through thinning; and round robin information sharing. A fifteen-minute public comment period is scheduled at approximately 1:45 p.m. The committee welcomes the publics' written comments on committee business at any time. The meeting should end around 3 p.m. Interested citizens are encouraged to attend. Lunch will be provided.

FOR FURTHER INFORMATION CONTACT: Joni Quarnstrom, Public Affairs Specialist, Siuslaw National Forest, 541/750–7075 or write to Forest Supervisor, Siuslaw National Forest, P.O. Box 1148, Corvallis, OR 97339.

Dated: March 14, 2002.

Gloria D. Brown,

Forest Supervisor.

[FR Doc. 02–6676 Filed 3–19–02; 8:45 am]

BILLING CODE 3410–11–M

DEPARTMENT OF AGRICULTURE

Forest Service

Southwest Washington Provincial Advisory Committee Meeting Notice

AGENCY: Forest Service, USDA.

ACTION: Notice of meeting.

SUMMARY: The Southwest Washington Provincial Advisory Committee will meet on Wednesday, March 27, at the Gifford Pinchot National Forest Headquarters, located at 10600 NE 51st Circle, Vancouver, Washington. The meeting will begin at 9 a.m. and continue until 4 p.m. The purpose of the meeting is to learn about: (1) The possibilities of meth labs in the forest, (2) how special interest groups interpret mature and old growth protection and forest restoration, (3) an overview of the strategy for protection of the Columbia River and basin-wide habitat recovery, (4) the water quality restoration plan for the Wind and Upper Cispus Rivers, and (5) provide for a Public Open Forum. All Southwest Washington Provincial Advisory Committee meetings are open to the public. Interested citizens are encouraged to attend. The ''open forum'' provides opportunity for the public to bring issues, concerns, and discussion topics to the Advisory Committee. The ''open forum'' is scheduled as part of agenda item (3) for this meeting. Interested speakers will need to register prior to the open forum period. The committee welcomes the public's written comments on committee business at any time.

FOR FURTHER INFORMATION CONTACT: Direct questions regarding this meeting to Linda Turner, Public Affairs Specialist, at (360) 891–5195, or write Forest Headquarters Office, Gifford Pinchot National Forest, 10600 NE 51st Circle, Vancouver, WA 98682.

Dated: March 14, 2002.

Claire Lavendel,

Forest Supervisor.

[FR Doc. 02–6675 Filed 3–19–02; 8:45 am]

BILLING CODE 3410–11–M

DEPARTMENT OF COMMERCE

International Trade Administration

[A–201–805]

Circular Welded Non-Alloy Steel Pipe from Mexico: Rescission of Antidumping Duty Administrative Review

AGENCY: Import Administration, International Trade Administration, Department of Commerce.

ACTION: Notice of Rescission of Antidumping Duty Administrative Review.

SUMMARY: On December 19, 2001, in response to a request made by Hysla, S.A. de C.V. (''Hylsa''), the Department of Commerce (''the Department'') published in the Federal Register (66 FR 65470) a notice announcing the initiation of an administrative review of the antidumping duty order on circular welded non–alloy steel pipe from Mexico. The review period is November 1, 2000 to October 31, 2001. This review has now been rescinded because Hylsa has withdrawn its request for review.

EFFECTIVE DATE: March 20, 2002.

FOR FURTHER INFORMATION CONTACT: John Drury, Enforcement Group III, Office 8, Import Administration, International Trade Administration, U.S. Department of Commerce, 14th Street and Constitution Avenue, N.W., Room 7866, Washington, D.C. 20230; telephone (202) 482–0195.

SUPPLEMENTARY INFORMATION:

The Applicable Statute

Unless otherwise indicated, all citations to the Tariff Act of 1930, as amended (the Act) are references to the provisions effective January 1, 1995, the effective date of the amendments made to the Act by the Uruguay Round Agreements Act (URAA). In addition, unless otherwise indicated, all citations to the Department's regulations are references to the provisions codified at 19 CFR Part 351 (2001).

Scope of the Review

The products covered by these orders are circular welded non–alloy steel pipes and tubes, of circular cross–section, not more than 406.4 millimeters (16 inches) in outside diameter, regardless of wall thickness, surface finish (black, galvanized, or painted), or end finish (plain end, beveled end, threaded, or threaded and coupled). These pipes and tubes are generally known as standard pipes and tubes and are intended for the low pressure conveyance of water, steam, natural gas, and other liquids and gases in plumbing and heating systems, air conditioning units, automatic sprinkler systems, and other related uses, and generally meet ASTM A–53 specifications. Standard pipe may also be used for light load–bearing applications, such as for fence tubing, and as structural pipe tubing used for framing and support members for reconstruction or load–bearing purposes in the construction, shipbuilding, trucking, farm equipment, and related industries. Unfinished conduit pipe is also included in these orders. All carbon steel pipes and tubes within the physical description outlined above are included within the scope of these orders, except line pipe, oil country tubular goods, boiler tubing, mechanical tubing, pipe and tube hollows for redraws, finished scaffolding, and finished conduit. Standard pipe that is dual or triple certified/stenciled that enters the United States as line pipe of a kind used for oil or gas pipelines is also not included in these orders.

Imports of the products covered by this order are currently classifiable under the following Harmonized Tariff Schedule (HTS) subheadings: 7306.30.10.00, 7306.30.50.25, 7306.30.50.32, 7306.30.50.40, 7306.30.50.55, 7306.30.50.85, and 7306.30.50.90. Although the HTS subheadings are provided for convenience and customs purposes, our written description of the scope of these proceedings is dispositive.

Background

On November 30, 2001, Hylsa (a producer and exporter of subject merchandise) requested an administrative review of the antidumping duty order on circular welded non–alloy steel pipe from Mexico published in the Federal Register on November 2, 1992 (57 FR 49453). On December 17, 2001, hylsa withdrew its request for review. On December 19, 2001, the Department published in the Federal Register (66 FR 65470) a notice of ''Initiation of Antidumping and Countervailing Duty Administrative Reviews'' initiating the administrative review. The applicable regulation, 19 CFR 351.213(d)(1), states that if a party that requested an administrative review withdraws the request within 90 days of the publication of the notice of initiation of the requested review, the Secretary will rescind the review. Given that Hylsa was the only party to request the administrative review, and the withdrawal request is timely, we find it reasonable to accept the withdrawal request. Therefore, we are rescinding

this review of the antidumping duty order on circular welded non–alloy steel pipe from Mexico covering the period November 1, 2000 through October 31, 2001.

This notice is issued and published in accordance with section 777(i) of the Act and 19 CFR 351.213(d)(4).

Dated: March 5, 2002.

Joseph A. Spetrini,

Deputy Assistant Secretary for Import Administration, Group III.

[FR Doc. 02–6741 Filed 3–19–02; 8:45 am]

BILLING CODE 3510–DS–S

DEPARTMENT OF COMMERCE

International Trade Administration

[A–570–875]

Notice of Initiation of Antidumping Duty Investigation: Non–Malleable Cast Iron Pipe Fittings from the People's Republic of China

AGENCY: Import Administration, International Trade Administration, Department of Commerce.

ACTION: Initiation of Antidumping Duty Investigation.

EFFECTIVE DATE: March 20, 2002.

FOR FURTHER INFORMATION CONTACT: Ron Trentham or Paige Rivas at (202) 482–6320 and (202) 482–0651, respectively; Import Administration, International Trade Administration, U.S. Department of Commerce, 14th Street and Constitution Avenue, NW, Washington, DC 20230.

Initiation of Investigation

The Applicable Statute and Regulations

Unless otherwise indicated, all citations to the statute are references to the provisions effective January 1, 1995, the effective date of the amendments made to the Tariff Act of 1930, as amended (the Act), by the Uruguay Round Agreements Act (URAA). In addition, unless otherwise indicated, all citations to the Department of Commerce's (the Department's) regulations are references to the provisions codified at 19 CFR Part 351 (2001).

The Petition

On February 21, 2002, the Department received a petition filed in proper form by Anvil International, Inc., and Ward Manufacturing Inc. (collectively, the petitioners). The Department received information supplementing the petition on March 5, 2002 and March 11, 2002.

In accordance with section 732(b) of the Act, the petitioners allege that imports of non–malleable cast iron pipe fittings and ductile cast iron pipe fittings that have the same physical characteristics as non–malleable cast iron pipe fittings (pipe fittings) from the People's Republic of China (PRC) are being, or are likely to be, sold in the United States at less than fair value within the meaning of section 731 of the Act, and that such imports are materially injuring, or are threatening to materially injure, an industry in the United States.

The Department finds that the petitioners filed this petition on behalf of the domestic industry because they are interested parties as defined in sections 771(9)(C) of the Act and have demonstrated sufficient industry support with respect to the antidumping investigation that they are requesting the Department to initiate (*see* the *Determination of Industry Support for the Petition* section below).

Scope of Investigation

For purposes of this investigation, the products covered are finished and unfinished non–malleable cast iron pipe fittings with an inside diameter ranging from 1/4 inch to 6 inches, whether threaded or un–threaded, regardless of industry or proprietary specifications. The subject fittings include elbows, ells, tees, crosses, and reducers as well as flanged fittings. These pipe fittings are also known as cast iron pipe fittings or gray iron pipe fittings. These cast iron pipe fittings are normally produced to ASTM A–126 and ASME B.l6.4 specifications and are threaded to ASME B1.20.1 specifications. Most building codes require that these products are Underwriters Laboratories (UL) certified. The scope does not include cast iron soil pipe fittings or grooved fittings or grooved couplings.

Fittings that are made out of ductile iron that have the same physical characteristics as the gray or cast iron fittings subject to the scope above or which have the same physical characteristics and are produced to ASME B.16.3, ASME B.16.4, or ASTM A–395 specifications, threaded to ASME B1.20.1 specifications and UL certified, regardless of metallurgical differences between gray and ductile iron, are also included in the scope of this petition. These ductile fittings do not include grooved fittings or grooved couplings. Ductile cast iron fittings with mechanical joint ends (MJ), or Push On ends (PO), or flanged ends and produced to the American Water Works Association (AWWA) specifications–AWWA C110 or AWWA C153 are not included.

Imports of covered merchandise are classifiable in the Harmonized Tariff Schedule of the United States (HTSUS) under item numbers 7307.11.00.30, 7307.11.00.60, 7307.19.30.60 and 7307.19.30.85. HTSUS subheadings are provided for convenience and Customs purposes. The written description of the scope of this proceeding is dispositive.

During our review of the petition, we discussed the scope with the petitioners to ensure that it accurately reflects the product for which the domestic industry is seeking relief. Moreover, as discussed in the preamble to the Department's regulations, we are setting aside a period for parties to raise issues regarding product coverage. *See*, *Antidumping Duties; Countervailing Duties; Final Rule*, 62 FR 27295, 27323 (May 19, 1997). The Department encourages all parties to submit such comments within 20 days from the publication of this notice. Comments should be addressed to Import Administration's Central Records Unit at Room 1870, U.S. Department of Commerce, 14th Street and Constitution Avenue, N.W., Washington, D.C. 20230. The scope comment period is intended to provide the Department with ample opportunity to consider all comments and consult with parties prior to the issuance of the preliminary determination.

Determination of Industry Support for the Petition

Section 771(4)(A) of the Act defines the ''industry'' as the producers of a domestic like product. Thus, to determine whether the petition has the requisite industry support, the statute directs the Department to look to producers and workers who produce the domestic like product. The United States International Trade Commission (ITC), which is responsible for determining whether ''the domestic industry'' has been injured, must also determine what constitutes a domestic like product in order to define the industry. While both the Department and the ITC must apply the same statutory definition regarding domestic like product (see section 771(10) of the Act), they do so for different purposes and pursuant to their separate and distinct authority. In addition, the Department's determination is subject to limitations of time and information. Although this may result in different definitions of the like product, such differences do not render the decision of either agency contrary to the law.[1]

[1] See Algoma Steel Corp. Ltd., v. United States, 688 F. Supp. 639, 642–44 (CIT 1988); High Information Content Flat Panel Displays and

Section 771(10) of the Act defines the domestic like product as ''a product which is like, or in the absence of like, most similar in characteristics and uses with, the article subject to an investigation under this title.'' Thus, the reference point from which the domestic like product analysis begins is ''the article subject to an investigation,'' *i.e.*, the class or kind of merchandise to be investigated, which normally will be the scope as defined in the petition.

In this petition, the petitioners do not offer a definition of domestic like product distinct from the scope of these investigations. Thus, based on our analysis of the information presented to the Department by the petitioners, and the information obtained and received independently by the Department, we have determined that there is a single domestic like product, which is defined in the *Scope of Investigation* section above, and have analyzed industry support in terms of this domestic like product.

Section 732(b)(1) of the Act requires that a petition be filed on behalf of the domestic industry. Section 732(c)(4)(A) of the Act provides that a petition meets this requirement if the domestic producers or workers who support the petition account for: (1) at least 25 percent of the total production of the domestic like product; and (2) more than 50 percent of the production of the domestic like product produced by that portion of the industry expressing support for, or opposition to, the petition. Information contained in the petition demonstrates that the domestic producers or workers who support the petition account for over 50 percent of total production of the domestic like product. *See*, *Petition for Imposition of Antidumping Duties: Non–Malleable Cast Iron Pipe Fittings from the People's Republic of China (Pipe Fittings Petition*), dated February 21, 2002, at page 3. Therefore, the domestic producers or workers who support the petitions account for at least 25 percent of the total production of the domestic like product, and the requirements of section 732(c)(4)(A)(i) are met. *See*, *Import Administration AD Investigation Checklist*, dated March 13, 2002 (*Initiation Checklist*) (public version on file in the Central Records Unit of the Department of Commerce, Room B–099). Furthermore, because the Department received no opposition to the petition, the domestic producers or workers who support the petition account for more than 50 percent of the production of the domestic like product produced by that portion of the industry expressing support for or opposition to the petition. *See*, *Initiation Checklist*. Thus, the requirements of section 732(c)(4)(A)(ii) are met.

Accordingly, the Department determines that the petition was filed on behalf of the domestic industry within the meaning of section 732(b)(1) of the Act. *See*, *Initiation Checklist*.

Export Price and Normal Value

The following is a description of the allegation of sales at less than fair value upon which the Department has based its decision to initiate this investigation. The sources of data for the deductions and adjustments relating to U.S. price and factors of production (FOP) are detailed in the *Initiation Checklist*.

The anticipated period of investigation (POI) for the PRC, a non–market economy (NME) country, is July 1, 2001 through December 31, 2001. Regarding an investigation involving an NME country, the Department presumes, based on the extent of central government control in an NME, that a single dumping margin, should there be one, is appropriate for all NME exporters in the given country. *See*, *e.g.*, *Final Determination of Sales at Less Than Fair Value: Silicon Carbide from the PRC*, 59 FR 22585 (May 2, 1994). In the course of the investigation of pipe fittings from the PRC, all parties will have the opportunity to provide relevant information related to the issue of the PRC's status and the granting of separate rates to individual exporters.

Export Price

The petitioners identified the following three companies as producers and/or exporters of pipe fittings from the PRC: Eathu Casting & Forging Co., Ltd., GMS Pipe Fittings Industries, and ShenYang Metalcast Co., Ltd. To calculate export price (EP), the petitioners provided the average unit value (AUV) calculated from import statistics released by the Census Bureau. The petitioners calculated the AUV using the quantity and value of imports during the POI of pipe–fittings from the PRC, entered under HTSUS subheadings 7307.11.00.30 and 7307.11.00.60, the two HTSUS numbers covering non–malleable cast iron pipe fittings.

The petitioners calculated a net U.S. price by deducting from the AUV foreign inland freight. *See Initiation Checklist*.

Normal Value

The petitioners assert that the PRC is an NME country and no determination to the contrary has yet been made by the Department. In previous investigations, the Department has determined that the PRC is an NME. *See*, *Steel Concrete Reinforcing Bars from the People's Republic of China; Notice of Final Determination of Sales at Less Than Fair Value (Re–Bars from China*), 66 FR 33522 (June 22, 2001), and *Notice of Final Determination of Sales at Less Than Fair Value: Foundry Coke Products from the People's Republic of China (Foundry Coke from China*), 66 FR 39487 (July 31, 2001). In accordance with section 771(18)(C)(i) of the Act, the presumption of NME status remains in effect until revoked by the Department. The presumption of NME status for the PRC has not been revoked by the Department and, therefore, remains in effect for purposes of the initiation of this investigation. Because the PRC's status as an NME remains in effect, the petitioners determined the dumping margin using an FOP analysis.

For normal value (NV), the petitioners based the FOP, as defined by section 773(c)(3) of the Act, on the consumption rates of one U.S. pipe fittings producer for non–malleable cast iron pipe fittings. The petitioners assert that information regarding the Chinese producers' consumption rates is not available, and have therefore assumed, for purposes of the petition, that producers in the PRC use the same inputs in the same quantities as the petitioners use, except where a variance from the petitioners' cost model can be justified on the basis of available information. Based on the information provided by the petitioners, we believe that the petitioners' FOP methodology represents information reasonably available to the petitioners and is appropriate for purposes of initiating this investigation.

Pursuant to section 773(c) of the Act, the petitioners assert that India is the most appropriate surrogate country for the PRC, claiming that India is: (1) a market economy; (2) a significant producer of comparable merchandise; and (3) at a level of economic development comparable to the PRC in terms of per capita gross national product (GNP). Based on the information provided by the petitioners, we believe that the petitioners' use of India as a surrogate country is appropriate for purposes of initiating this investigation.

In accordance with section 773(c)(4) of the Act, the petitioners valued FOP, where possible, on reasonably available, public surrogate data from India. Raw materials were valued based on Indian import values, as published by *Monthly Statistics of the Foreign Trade of India* (*Indian Import Statistics*) for February

Display Glass Therefore from Japan: Final Determination; Rescission of Investigation and Partial Dismissal of Petition, 56 FR 32376, 32380–81 (July 16, 1991).

2001. Because these values are from a period preceding the POI, the petitioners inflated the value to December 2001 levels where appropriate, using the Indian Wholesale Prices Index (as published in the *International Financial Statistics* of the International Monetary Fund).

Labor was valued using the Department's regression–based wage rate for the PRC, in accordance with past Department practice. *See*, *Pipe Fittings Petition* at 14 and citations discussed therein. Electricity was valued using the 1997 Indian electricity prices for industry as published in the fourth quarter 2001 issue of *Energy Prices and Taxes*, published by the Organization for Economic Cooperation and Development's International Energy Agency. To inflate the price to December 2001 levels, the petitioners multiplied the computed amount by an inflation factor. *See*, *Pipe Fittings Petition* at 15 and 16.

Foundry coke was valued using Indian Import Statistics for February 2001. To inflate the price to December 2001 levels, the petitioners multiplied the computed amount by an inflation factor, and adjusted for price differences between U.S. foundry coke and blast furnace coke prices in the first quarter of 2001. *See*, *Pipe Fittings Petition* at 14 and 15.

We find the petitioners' calculation of foundry coke to be inappropriate because there is no evidence based on the actual Indian data that: (1) the data included the import value for both blast furnace coke and foundry coke, as claimed in the petition, and (2) the majority of Indian imports was of blast furnace coke. Accordingly, we have recalculated the surrogate value for foundry coke based on the figures in the *Indian Import Statistics* without any further adjustments.

The petitioners derived the surrogate value for natural gas from a price the Department utilized in the *Notice of Preliminary Determination of Sales at Less Than Fair Value: Certain Hot–Rolled Carbon Steel Flat Products From the People's Republic of China*, 66 FR 22183 (May 3, 2001). To convert to the unit of measurement used in the production factors of the U.S. surrogate, the petitioners multiplied the amount by 1,000. To inflate the price to December 2001 levels, the petitioners multiplied the computed amount by a U.S. inflation factor because it was denominated in U.S. dollars. *See*, *Pipe Fittings Petition* at 16. For overhead, depreciation, selling general and administrative (SG&A) expenses, the petitioners applied rates derived from the fiscal year financial statements as of December 31, 2000, of an Indian pipe fittings producer that the petitioners believe to produce iron and steel castings, including cast iron pipes and fittings. The Indian pipe fittings producer did not make any profits in both 2000 and 2001; therefore, the petitioners calculated the profit ratio using the financial statements of another Indian steel producer using the financial statements of that company as of March 31, 2001. *See*, *Pipe Fittings Petition* at 17. Based on the information provided by the petitioners, we believe that the surrogate values represent information reasonably available to the petitioners and are acceptable for purposes of initiating this investigation.

The petitioners did not include packing materials in its computation because it was unable to obtain information on this expense. The petitioners valued packing labor using the direct labor rate published on the Department's website. *See*, *Pipe Fittings Petition* at 17.

Based upon the comparison of EP to NV, the estimated dumping margin is 38.25 percent.

Fair Value Comparisons

Based on the data provided by the petitioners, there is reason to believe that imports of pipe fittings from the PRC are being, or are likely to be, sold at less than fair value.

Allegations and Evidence of Material Injury and Causation

The petitioners allege that the U.S. industry producing the domestic like product is being materially injured, or is threatened with material injury, by reason of imports of the subject merchandise sold at less than NV. The volume of imports from the PRC, using the latest available data, exceeded the statutory threshold of seven percent for a negligibility exclusion. See, section 771(24)(A)(ii) of the Act. The petitioners contend that the industry's injured condition is evidenced in the declining trends in operating income, decreased U.S. market share, and increasing Chinese imports. The allegations of injury and causation are supported by relevant evidence including U.S. Customs import data, domestic consumption, and domestic production information. We have assessed the allegations and supporting evidence regarding material injury and causation, and have determined that these allegations are properly supported by accurate and adequate evidence and meet the statutory requirements for initiation. *See*, *Initiation Checklist*.

Initiation of the Antidumping Investigation

Based on our examination of the petition on pipe fittings, and the petitioners' response to our supplemental questionnaire clarifying the petition, and additional independent data, we find that the petition meets the requirements of section 732 of the Act. *See*, *Initiation Checklist*. Therefore, we are initiating the antidumping duty investigation to determine whether imports of pipe fittings from the PRC are being, or are likely to be, sold in the United States at less than fair value. Unless this deadline is extended, we will make our preliminary determination no later than 140 days after the date of this initiation.

Distribution of Copies of the Petition

In accordance with section 732(b)(3)(A) of the Act, a copy of the public version of the petition has been provided to the representatives of the government of the PRC. We will attempt to provide a copy of the public version of the petition to each exporter named in the petition, as appropriate.

International Trade Commission Notification

We have notified the ITC of our initiation, as required by section 732(d) of the Act.

Preliminary Determination by the ITC

The ITC will determine, no later than April 8, 2002 whether there is a reasonable indication that imports of pipe fittings from the PRC are causing material injury, or threatening to cause material injury, to a U.S. industry. A negative ITC determination will result in the investigation being terminated; otherwise, this investigation will proceed according to statutory and regulatory time limits.

This notice is issued and published pursuant to section 777(i) of the Act.

Dated: March 13, 2002.

Richard W. Moreland,

Acting Assistant Secretary for Import Administration.

[FR Doc. 02–6739 Filed 3–19–02; 8:45 am]

BILLING CODE 3510–DS–S

DEPARTMENT OF COMMERCE

International Trade Administration

[A–570–847]

Persulfates From the People's Republic of China: Extension of Time Limit for Preliminary Results in Antidumping Duty Administrative Review

AGENCY: Import Administration, International Trade Administration, Department of Commerce.

ACTION: Extension of Time Limit for Preliminary Results of Antidumping Duty Administrative Review.

EFFECTIVE DATE: March 20, 2002.

FOR FURTHER INFORMATION CONTACT: Michael Strollo at (202) 482–0629, Office of AD/CVD Enforcement, Import Administration, International Trade Administration, U.S. Department of Commerce, 14th Street and Constitution Avenue, NW., Washington DC 20230.

SUPPLEMENTARY INFORMATION:

Applicable Statute and Regulations

Unless otherwise indicated, all citations to the Tariff Act of 1930, as amended (the Act), are references to the provisions effective January 1, 1995, the effective date of the amendments made to the Act by the Uruguay Round Agreements Act. In addition, unless otherwise indicated, all citations to the Department of Commerce's (the Department's) regulations are to 19 CFR part 351 (2001).

Background

On August 20, 2001, the Department published a notice of initiation of administrative review of the antidumping duty order on persulfates from the People's Republic of China. The period of review is July 1, 2000 through June 30, 2001. The review covers one exporter of the subject merchandise to the United States.

Pursuant to section 751(a)(3)(A) of the Act, the Department shall make a preliminary determination in an administrative review of an antidumping duty order within 245 days after the last day of the anniversary month of the date of publication of the order. The Act further provides, however, that the Department may extend the 245-day period to 365 days if it determines it is not practicable to complete the review within the foregoing time period. Due to the complexity of selecting surrogate values to value factors of production, the large numbers of the surrogate values, and the fact that the Department shall conduct verification in this proceeding, it is not practicable to complete this review within the time limit mandated by section 751(a)(3)(A) of the Act. Therefore, in accordance with section 751 (a)(3)(A) of the Act, we have fully extended the deadline until July 31, 2002.

Dated: March 13, 2002.

Richard W. Moreland,

Deputy Assistant Secretary for Import Administration.

[FR Doc. 02–6740 Filed 3–19–02; 8:45 am]

BILLING CODE 3510–DS–P

DEPARTMENT OF COMMERCE

International Trade Administration

Industry Sector and Functional Advisory Committees for Trade Policy Matters (ISACs and IFACs); Request for Nominations

AGENCY: International Trade Administration, Trade Development.

ACTION: Notice of charter renewal and opportunity to nominate candidates for vacancies on the ISACs and IFACs.

SUMMARY: On March 18, 2002, the Secretary of Commerce and the United States Trade Representative (USTR) renewed the charters of the 17 Industry Sector and four Industry Functional Advisory Committees on Trade Policy Matters for a two-year term to expire March 18, 2004. The Industry Sector and Functional Advisory Committees (ISACs and IFACs) advise the United States Trade Representative and the Secretary of Commerce on trade matters. There are currently opportunities for membership on each of these Committees, including opportunities to serve as environmental representative on three of the Committees: ISAC 3 (Chemicals and Allied Products), ISAC 10 (Lumber and Wood Products), and ISAC 12 (Paper and Paper Products). Nominations will be accepted for current vacancies and those that occur throughout the remainder of the charter term, which expires on March 18, 2004. In order to be considered for appointment to the ISACs and IFACs, a nominee must be a U.S. citizen who is not a full-time employee of a governmental entity, is not registered with the Department of Justice under the Foreign Agents Registration Act, and represents a U.S. entity that trades internationally or an association of such entities (an environmental nominee must represent a U.S. entity with an interest in environmental issues relevant to the work of these Committees). Priority will be given to manufacturing establishments and firms that are outside of the Washington, DC area. U.S.-based subsidiaries of foreign companies, non-government organizations (except environmental organizations applying to ISAC 3, ISAC 10, and ISAC 12), and academic institutions do not qualify for representation on a Committee.

Recruitment: Vacancies may occur throughout the charter period and new appointments are made on a rolling basis. Recruitment information is available on the International Trade Administration website at: *www.ita.doc.gov/icp*. Further inquiries may be directed to Ingrid V. Mitchem, Director, Industries Consultations Program, U.S. Department of Commerce, 14th and Constitution Avenue, NW., Room 2015–B, Washington, DC 20230.

SUPPLEMENTARY INFORMATION: Pursuant to the Federal Advisory Committee Act (5 U.S.C. appendix 2), the Secretary of Commerce (the Secretary) and the United States Trade Representative (USTR) have renewed the charters of seventeen ISACs and four IFACs. The Secretary and USTR welcome nominations for the Industry Sector Advisory Committees for Trade Policy Matters (ISACs) and the Industry Functional Advisory Committees for Trade Policy Matters (IFACs) listed below:

- Industry Sector Advisory Committees for Trade Policy Matters (ISAC) on:

Aerospace Equipment (ISAC 1);
Capital Goods (ISAC 2);
Chemicals and Allied Products (ISAC 3);
Consumer Goods (ISAC 4);
Electronics and Instrumentation (ISAC 5);
Energy (ISAC 6);
Ferrous Ores and Metals (ISAC 7);
Footwear, Leather, and Leather Products (ISAC 8);
Building Products and Other Materials (ISAC 9);
Lumber and Wood Products (ISAC 10);
Nonferrous Ores and Metals (ISAC 11);
Paper and Paper Products (ISAC 12);
Services (ISAC 13);
Small and Minority Business (ISAC 14);
Textiles and Apparel (ISAC 15);
Transportation, Construction, Mining, Agricultural Equipment (ISAC 16);
Wholesaling and Retailing (ISAC 17); and

- Industry Functional Advisory Committees on Trade Policy Matters on:

Customs (IFAC 1);
Standards (IFAC 2);
Intellectual Property Rights (IFAC 3); and
Electronic Commerce (IFAC 4).

Background

In section 135 of the Trade Act of 1974 (1974 Trade Act, 19 U.S.C. 2155), as amended, Congress established a private-sector advisory system to ensure that U.S. trade policy and trade negotiation objectives adequately reflect U.S. commercial and economic interests. Section 135(a)(1) directs the President to

> Seek information and advice from representative elements of the private sector and the non-federal governmental sector with respect to—
>
> (A) Negotiating objectives and bargaining positions before entering into a trade agreement under [title I of the Trade Act of 1974 and section 1102 of the Omnibus Trade and Competitiveness Act of 1988];
>
> (B) The operation of any trade agreement once entered into, including preparation for dispute settlement panel proceedings to which the United States is a party; and
>
> (C) Other matters arising in connection with the development, implementation, and administration of the trade policy of the United States * * *

Section 135(c)(2) of the 1974 Trade Act provides that—

> (2) The President shall establish such sectoral or functional advisory committees as may be appropriate. Such committees shall, insofar as is practicable, be representative of all industry, labor, agricultural, or service interests (including small business interests) in the sector or functional areas concerned. In organizing such committees, the United States Trade Representative and the Secretaries of Commerce, Labor, Agriculture, the Treasury, or other executive departments, as appropriate, shall—
>
> (A) Consult with interested private organizations; and
>
> (B) Take into account such factors as—
>
> (i) patterns of actual and potential competition between United States industry and agriculture and foreign enterprise in international trade,
>
> (ii) the character of the non-tariff barriers and other distortions affecting such competition,
>
> (iii) the necessity for reasonable limits on the number of such advisory committees,
>
> (iv) the necessity that each committee be reasonably limited in size, and
>
> (v) in the case of each sectoral committee, that the product lines covered by each committee be reasonably related.

Pursuant to this provision, Commerce and USTR have established and co-chair seventeen Industry Sector Advisory Committees (ISACs) and four Industry Functional Advisory Committees (IFACs). The Committees' efforts have resulted in strengthening U.S. negotiating positions by enabling the United States to display a united front when it negotiates trade agreements with other nations. Committees meet an average of four times a year in Washington, DC. Members serve without compensation and are responsible for all expenses incurred in attending Committee meetings.

The Secretary of Commerce and the USTR co-chair the seventeen ISACs and IFACs.

Functions

The duties of the ISACs and IFACs are to provide the President with advice on objectives and bargaining positions for multilateral trade negotiations, bilateral trade negotiations, and other trade-related matters. The Committees provide bipartisan, industry input in the development of trade policy objectives. The Committees' efforts result in strengthening the U.S. negotiating position by enabling the United States to display a united front when it negotiates trade agreements with other nations.

The ISACs provide advice and information on issues that affect specific sectors of U.S. industry. The ISACs address market-access problems; barriers to trade; tariff levels; discriminatory foreign procurement practices; information, marketing, and advocacy needs of their sector; and other important trade issues.

The IFACs focus on cross-cutting issues that affect all industry sectors, such as customs matters, product standards, and intellectual property rights. Other functional issues, such as government procurement and subsidies, are handled in ad hoc meetings. Each ISAC may also select a member to serve on each IFAC so that a broad range of industry perspectives is represented.

Committees meet an average of four times a year, in Washington, DC. Members are responsible for all travel expenses incurred to attend the meetings.

Membership

ISAC and IFAC members are appointed jointly by the Secretary of Commerce and the USTR. Appointments are made at the rechartering of each Committee and periodically throughout the two-year charter period. Members serve at the discretion of the Secretary and USTR. Appointments to an ISAC or IFAC expire at the end of the Committee's charter. However, members may be re-appointed, should the Committee's charter be renewed, if the member proves to work effectively with the committee and his/her participation is still needed.

Each Committee is made up of approximately 30–50 members, based on the charter of each Committee. Each Committee elects a chairperson from the membership of the Committee.

Eligibility

Eligibility for membership on any Committee is limited to U.S. citizens who are not full-time employees of a governmental entity, are not registered with the Department of Justice under the Foreign Agents Registration Act, and represent a U.S. entity that (a) is directly engaged in the import or export of goods or that sells its services abroad, (b) is an association of such entities, or (c) with respect to environmental representatives serving on ISACs 3, 10 or 12, has an interest in environmental issues relevant to the work of the Committee. For purposes of the preceding sentence, a ''U. S. entity'' is an organization incorporated in the United States (or if unincorporated, having its headquarters in the United States:

(1) That is controlled by U.S. citizens or by another U.S. entity. An entity is not a U.S. entity if more than 50 percent of its Board of Directors or membership is made up of non-U.S. citizens. If the nominee is to represent an organization more than 10 percent of whose Board of Directors or membership is made up of non-U.S. citizens, or non-U.S. entities, the nominee must demonstrate at the time of nomination that this non-U.S. interest does not constitute control and will not adversely affect his or her ability to serve as a trade advisor to the United States; and

(2) At least 50 percent of whose annual revenue is attributable to non-governmental, U.S. sources.

Nominees are considered based upon their ability to carry out the goals of section 135 of the Trade Act of 1974, as amended. Secondary criteria are ensuring that the Committees are balanced in terms of points of view, demographics, geography, and company size. Appointments to all ISACs and IFACs are made without regard to political affiliation.

Application Procedures

Requests for applications should be sent to the Director of the Industry Consultations Program, U.S. Department of Commerce, 14th and Constitution Avenue, NW, Room 2015–B, Washington, DC 20230.

This notice is issued under the Federal Advisory Committee Act (5 U.S.C., app. 2) and 21 CFR part 14 relating to advisory committees.

Dated: March 13, 2002.

Linda M. Conlin,

Assistant Secretary for Trade Development.

[FR Doc. 02–6660 Filed 3–19–02; 8:45 am]

BILLING CODE 3510–DR–P

DEPARTMENT OF COMMERCE

National Oceanic and Atmospheric Administration

[Docket No. 020213030–2030–01; I.D. No. 012202C]

Announcement of Funding Opportunity to Submit Proposals for the Monitoring and Event Response for Harmful Algal Blooms (MERHAB) Program

AGENCY: Center for Sponsored Coastal Ocean Research/Coastal Ocean Program (CSCOR/COP), National Ocean Service (NOS), National Oceanic and Atmospheric Administration (NOAA), Department of Commerce (DOC).

ACTION: Notice of funding availability for financial assistance for project grants and cooperative agreements.

SUMMARY: The purpose of this document is to advise the public that CSCOR/COP is soliciting proposals for two types of projects: targeted research and regional intensive monitoring.

CSCOR/COP is soliciting targeted research proposals for one to three years of research and development of tools, approaches and technologies that could be included as routine components of existing Harmful Algal Bloom (HAB) monitoring programs. CSCOR/COP is also soliciting proposals from regional multi-investigator partnerships of one to five years for intensive monitoring of HABs that build the capacity of existing local, state, tribal, or regional coastal monitoring programs to provide early warning of HAB events to coastal communities and increase regional ability to rapidly respond to HAB events. Funding is contingent upon the availability of Federal appropriations. Projects funded under this announcement are anticipated to have a September 1, 2002, start date.

DATES: The deadline for receipt of proposals at the CSCOR/COP office is 3 p.m., e.s.t., April 25, 2002. Note that late-arriving applications provided to a delivery service on or before April 24, 2002, with delivery guaranteed before 3 p.m., e.s.t., on April 25, 2002, will be accepted for review if the applicant can document that the application was provided to the delivery service with delivery to the address listed below guaranteed prior to the specified closing date and time and, in any event, the proposals are received in the CSCOR/COP office by 3 p.m. e.s.t., no later than two business days following the closing date.

ADDRESSES: Submit the original and 19 copies of your proposal to (MERHAB02) Center for Sponsored Coastal Ocean Research/Coastal Ocean Program (N/SCI2), SSMC No. 4, 8th Floor, Station 8243, 1305 East-West Highway, Silver Spring, MD 20910. NOAA and Standard Form Applications with instructions are accessible on the CSCOR/COP Internet site http://www.cop.noaa.gov under the COP Grants Information Section, Part D, Application Forms for Initial Proposal Submission. For application forms, see Budget and

Application forms section. Forms may be viewed and, in most cases, filled in by computer. All forms must be printed, completed, and mailed to CSCOR/COP with original signatures. If you are unable to access this information, you may call CSCOR/COP at 301–713–3338 to leave a mailing request.

FOR FURTHER INFORMATION CONTACT: *Technical Information.* Marc Suddleson, MERHAB 2002 Program Manager, CSCOR/COP, 301–713–3338/ext 162, Internet: marc.suddleson@noaa.gov

Business Management Information. Leslie McDonald, COP Grants Administrator, 301–713–3338/ext 155, Internet: Leslie.McDonald@noaa.gov

SUPPLEMENTARY INFORMATION: The following web sites furnish supplementary information from reports dealing with harmful algal blooms: Boesch et.al Feb 1997, Harmful Algal Blooms in Coastal Waters: Options for Prevention, Control and Mitigation, Silver Spring, MD at http://www.cop.noaa.gov/pubs/das/das10.html; and Anderson *et.al.* Sept 2000, Estimated Annual Economic Impact from Harmful Algal Blooms (HABs) in the U.S. WHOI at http://www.redtide.whoi.edu/hab pertinentinfo /Economics—Report.pdf).

Information on the Harmful Algal Bloom and Hypoxia Research and Control Act and the 2000 National Assessment of HABs in U.S. Waters, National Science and Technology Council Committee on Environment and Natural Resources (CENR), Washington, DC, can be located at http://www.habhrca.noaa.gov.

Details about ongoing MERHAB projects currently funded by the CSCOR/COP MERHAB Program are found at

http://www.cop.noaa.gov/Fact—Sheets/MERHAB.htm. Hard copies of these resources can be obtained from the CSCOR/COP office.

Background

Program Description

For complete program description and other requirements for CSCOR/COP, see the General Grant Administration Terms and Conditions annual notification in the **Federal Register** (66 FR 63019, December 4, 2001) and at the CSCOR/COP home page.

In spite of a growing list of affected resources and coastal communities, our ability to prevent, control, and mitigate the impacts of HABs remains limited. Acting on the findings of a 1996 NOAA and DOI Report, Harmful Algal Blooms in Coastal Waters: Options for Prevention, Control and Mitigation, the research agenda of the Ecology and Oceanography of Harmful Algal Bloom (ECOHAB) program for the past five years has focused on building a scientific understanding about the cause and behavior of HABs. ECOHAB continues to support research that develops understandings of the linkages between the biology, ecology, physiology, and behavior of harmful species and the physics, chemistry, bathymetry, and meteorology of the surrounding environment. ECOHAB research is developing the capabilities to forecast bloom landfall, evaluate toxicity, and provide mitigation strategies that might ameliorate the impact of blooms along U.S. coasts. ECOHAB is also producing new state-of-the art HAB technologies, such as detection assays and molecular probes.

With the maturation of ECOHAB and other HAB research programs, more effort is needed to adapt their research products into regionally and locally tested tools that can be used to prevent, control, or mitigate the impact of HABs. The 1996 NOAA and DOI Report noted that knowledge about the basic information on the causes and behavior of HABs would ultimately lead to the development of prevention, control, and mitigation (PCM) strategies. The plan called for Federal and state agencies with responsibilities for resource management, environmental protection, and public health to support PCM research.

While prevention of HABs is the preferred management option, effort to enhance the current abilities to reduce the incidence and extent of harmful algal blooms (before they begin) requires additional research and face legislative hurdles. For example, more research is needed to determine whether a cause-and-effect relationship exists between increased pollution and nutrient loading and an incidence of some HAB species (e.g., Pfiesteria, Pseudo-nitzchia, cyanobacteria). Further, a national regulatory strategy to effectively control polluted run off and nutrient loading is under development; but more research is required to educate decision makers.

Efforts to control HABs are also being explored, but these too face serious scientific and policy hurdles. Attempts to use chemicals to directly control HAB

cells encounter many logistical problems and environmental objections. Chemicals are likely to be nonspecific, indiscriminately targeting all co-occurring algae and other organisms along with the target algal species. Chemical application and other options, such as flocculants or biological controls need additional research to determine their wider impacts to the coastal ecosystem.

Strategies to mitigate or minimize human health risks, ecosystem damage, fisheries losses, and declines in tourism due to algal blooms are currently the best option for coastal management of the HAB problem. Many different types of actions can be taken to mitigate the impact of HABs, including forecasting bloom development and movement, monitoring HAB cells and toxins, and responding rapidly to HAB events.

Monitoring combined with rapid response to HAB events has been identified as the most effective way to mitigate the impact of HABs (CENR 2000). A number of coastal states have existing HAB monitoring programs designed to prevent human illness from shellfish poisoning syndromes and to monitor the environment for blooms and forecast their development and movement. State shellfish monitoring programs detect toxins in different fisheries species either to provide advance warning of outbreaks or to delineate areas that require harvest restrictions. State environmental monitoring programs for plankton and fish in coastal estuaries and bays provide early warning of blooms.

Many states supplement their HAB monitoring activities with rapid response teams that are deployed to assess suspected HAB events. HABs have the potential to develop rapidly, and often the observable event may be short-lived. Rapid response is essential to ensure that the appropriate sampling is done to determine whether a HAB event is in progress. Regions also have established communication networks to distribute information about outbreaks to researchers, managers, and the public. Providing rapid and accurate information is critical to assess the risks to resources and human health and to avoid public misconceptions about the safety of coastal resources. Such misconceptions have caused severe economic impacts to regions not directly affected by HAB events. A study completed by Woods Hole Oceanographic Institute in September 2000 calculated the total estimated annual cost from HABs on public health, commercial fisheries, recreation and tourism, and monitoring and management in the United States to be $49 million. This estimate was noted by the authors to be highly conservative and sensitive to single events that equal or exceed the total estimated economic impact.

Many coastal communities experiencing HABs are not covered by regular public or private monitoring programs for HABs, and many do not receive adequate information about outbreaks. State monitoring programs have not kept pace with the expansion of the HABs problem. Tight state budgets and the need to monitor for more toxins in more organisms over larger areas have left many monitoring programs underfunded. Further, support of state monitoring efforts through the Federal Clean Water Program has not specifically addressed the need for increased HAB monitoring. The problem is exacerbated by managers' inability to quantify the benefits to human health, commercial fisheries, recreation and tourism of controlling HABs and to compare these to the costs of mitigation strategies.

CSCOR/COP Program Interest

Through the MERHAB program, CSCOR/COP intends to build capabilities of local, state, tribal, and private sector for regular and intensive measurement of HAB parameters. This will make existing monitoring programs more efficient while providing better coverage in time and space. MERHAB will enable rigorous field testing of state-of-the-art technology through targeted projects and will incorporate the new methods of detecting and tracking HABs into existing monitoring programs through regional, intensive monitoring projects. MERHAB will also develop event-response capabilities within affected regions to ensure trained and equipped personnel are able to mobilize quickly, conduct appropriate sampling and testing, and communicate effectively during HAB events.

With faster, less expensive, and more reliable detection methods for HAB cells and toxins, and stronger mechanisms in place to respond to outbreaks, programs will be better able to mitigate the impact of HABs on vital resources and will protect public health. As a result, managers will be able to better address the expanding HAB problems facing their coastal regions and, therefore, they will be better positioned to request long-term support from Federal and state agencies or from other funding entities.

Goal

The primary goal of the MERHAB program is to incorporate products generated from past or ongoing HAB research programs into operational components of existing monitoring programs in HAB-impacted coastal regions. MERHAB is not intended to provide long-term support for routine monitoring efforts.

A. MERHAB-Targeted Research Projects

(1) Objectives: (a) Develop a technology that will enhance HAB monitoring activities in U.S. coastal waters; and (b) incorporate that technology into existing HAB monitoring programs.

(2) Characteristics: (a) Should rigorously field-test new technologies to detect algal species, toxin, or toxicity and/or monitor the environmental conditions that support HABs. New technologies may include, but are not limited to, rapid field assays for shellfish, improved diagnostic techniques for in situ detection of HAB cells, and remote sensing technology to help target sampling efforts; (b) May be led either by an individual or by small investigative team; and (c) Must address specified research needs of the HAB community.

Investigators should include in their work plans efforts to build support for the incorporation of technology into one or more existing HAB monitoring programs. (See Part II: Further Supplementary Information Section (11) ''Project Funding Priorities.'')

B. MERHAB-regional, Intensive Monitoring Projects

(1) Objectives: (a) Develop new or increase existing regional capabilities for HAB monitoring; (b) Incorporate new tools for HAB measurement into existing monitoring efforts; (c) Include local, state, regional, Federal, or non-governmental entities as active partners in identifying environmental measurements and their importance to managing coastal resources and protecting human health (i.e. generating public advisories) in the area; (d) Determine long-term local and regional support that will assume financial responsibility for resulting enhancements in HAB monitoring once NOAA support has ended; and (e) Develop local and/or regional capabilities to respond to HAB events.

(2) Characteristics: (a) Include a suite of annual studies and involve a multi-disciplinary, collaborative team of investigators. The team should represent groups with strong interests in improved HAB monitoring, including, but not limited to, the natural and social science research community, existing monitoring programs, communities dependent upon affected resources, industry, and non-profit organizations; (b) Provide evidence that local, state,

tribal, regional, and Federal representatives were consulted in the development of the proposal to ensure appropriate economic, regulatory, and management issues are addressed; (c) Include a plan for continued consultation with these representatives to facilitate the incorporation of research results into existing monitoring programs and to identify means to continue HAB monitoring efforts after MERHAB project funding has ended; (d) Form a management team with a designated chairperson serving as the main point of contact with the MERHAB Program Manager.

In similar CSCOR research programs (i.e. ECOHAB), management teams provide strong leadership and solid partnerships among principal investigators and collaborators. Teams serve to interpret results collected from the expanded suite of pilot studies, permitting acceptance or rejection of the approaches, techniques, or tools explored during each annual budget period. MERHAB management teams will also analyze results for application under local conditions and assess effectiveness under specific constraints so that application to other coastal systems or species may be determined.

Shared Research Project Characteristics

The following characteristics are shared by both MERHAB-Targeted projects and MERHAB-regional, intensive monitoring projects.

(1) Project results will be distributed to stakeholders via scientific, peer-reviewed articles, synthesis documents, briefings, electronic web sites, and any other means defined by the proposers.

(2) Project proposals should clearly identify a timetable of accomplishments and major program elements that will lead to specific interim and final assessments of applicability and effectiveness of a number of monitoring approaches.

Continuation of funding will be contingent upon the determination by the awarding agency that the selected project is on course to provide both interim and final products that will improve HAB monitoring capabilities in the local or national coastal environment impacted by HABs.

Expected Products and Outcomes

A. MERHAB-Targeted Projects

(1) Development and testing of new HAB monitoring tools;

(2) Demonstration of effective application of technology in an existing monitoring program; and

(3) Comprehensive data analysis and integration that advances the state of science and management (i.e. technical reports, peer-reviewed publications, databases, numerical and conceptual models, etc.).

B. MERHAB-regional, Intensive Monitoring Projects

(1) Include regional stakeholder input and participation through means that may include, but are not limited to, annual workshops, management and technical advisory committees that involve a broad spectrum of regional interests and training in use of new technology;

(2) Provide recommendations to management of the parameters to be measured in a region and the types of instruments that should be developed or adapted into existing monitoring programs;

(3) Deploy new HAB monitoring tools in existing monitoring programs;

(4) Conduct comprehensive data analysis and integration that advances the state of science and management. (i.e. technical reports, peer-reviewed publications, data bases, numerical and conceptual models; regional case studies with explicit applications to important management issues; risk analysis of management scenarios; regional economic valuation of direct and indirect costs associated with HAB events; and region-specific management recommendations based on study results);

(5) Accept commitments from one or more local, state, tribal, regional, or Federal organizations for continued, long-term support of expanding HAB monitoring capabilities;

(6) Develop real-time, scientific response capability during HAB outbreaks for the region that includes, but is not limited to, the use of local experts, establishing local academic-government- NGO-private partnerships for providing immediate analytical and sampling capacities, and expanding local abilities for transferring samples to analytical services outside the region; and

(7) Outreach to improve awareness of HAB outbreaks and their environmental and societal costs, and to mitigate their impact on vital natural resources, public health and local/regional economies.

Part I: Schedule and Proposal Submission

This document requests full proposals only. The provisions for proposal preparation provided here are mandatory. Proposals received after the published deadline or proposals that deviate from the prescribed format will be returned to the sender without further consideration. Information regarding this announcement, additional background information, and required Federal forms are available on the COP home page.

Full Proposals

Applications submitted in response to this announcement require an original proposal and 19 proposal copies at time of submission. This includes color or high-resolution graphics, unusually sized materials, or otherwise unusual materials submitted as part of the proposal. For color graphics, submit either color originals or color copies. The stated requirements for the number of proposal copies provide for a timely review process. Facsimile transmissions and electronic mail submission of full proposals will not be accepted.

Required Elements

All recipients must follow the instructions in the preparation of the CSCOR/COP application forms included in Part II: Further Supplementary Information, (10) Application forms and kit. Each proposal must also include the following nine elements or it will be returned to sender without further consideration:

(1) *Standard Form 424.* At time of proposal submission, all applicants shall submit the Standard Form, SF–424 (Rev 7–97), ''Application for Federal Assistance,'' to indicate the total amount of funding proposed for the whole project period. This form is to be the cover page for the original proposal and all requested copies. Multi-institutional proposals must include signed SF–424 forms from all institutions requesting funding.

(2) *Signed summary title page.* The title page should be signed by the Principal Investigator (PI). The Summary Title page identifies the project's title starting with the acronym MERHAB 2002, a short title (less than 50 characters), the lead PI's name and affiliation, and complete address, phone, FAX, and E-mail information. The requested budget for each fiscal year should be included on the Summary Title page. Multi-investigator proposals must include the names and affiliations of each investigator on the title page. Multi-institution proposals must also identify the lead investigator from each fiscal year for each institution and the requested funding for each fiscal year for each institution on the title page, but no signatures are required on the title page from the additional institutions. Lead investigator and separate budget information is not requested on the title page for institutions that are proposed to receive

funds through a subcontract to the lead institution.

(3) *One-page abstract/project summary.* The Project Summary (Abstract) Form, submitted with the application, must include summaries of the problem, rationale, scientific objectives and/or hypotheses to be tested, and a brief summary of work to be completed. The prescribed CSCOR/COP format for the Project Summary Form can be found on the CSCOR/COP Internet site under the CSCOR/COP Grants Information section, Part D.

The summary should appear on a separate page, headed with the proposal title, institution(s), investigator(s), total proposed cost, and budget period. It should be written in the third person. The summary is used to help compare proposals quickly and allows the respondents to summarize these key points in their own words.

(4) *Statement of work/project description.* The statement of the proposed work/project must be complete and include: identification of the problem, scientific objectives, proposed methodology, relevance to the MERHAB 2002 program goals, and its scientific priorities. For MERHAB-Targeted project proposals, the project description (including relevant results from prior support) should not exceed 15 pages. For MERHAB-regional, intensive monitoring project proposals, the project description (including relevant results from prior support) should not exceed 20 pages. Both page limits are inclusive of figures, other visual materials, and letters of endorsement, but are exclusive of references, a milestone chart, and letters of collaboration from unfunded collaborators.

This section should clearly identify project management with a description of the functions of each PI within a team. It should provide a full scientific justification for the research, rather than simply reiterating justifications presented in this document. It should also include:

(a) The objective for the period of proposed work and its expected significance;

(b) The relation to the present state of knowledge in the field and relation to previous work and work in progress by the proposing principal investigator(s);

(c) A discussion of how the proposed project lends value to the program goals;

(d) Potential coordination with other investigators; and,

(5) *References cited.* Reference information is required. Each reference must include the names of all authors in the same sequence they appear in the publications, the article title, volume number, page numbers, and year of publications. While there is no established page limitation, this section should include bibliographic citations only and should not be used to provide parenthetical information outside the 15–page MERHAB-Targeted project or the 20–page MERHAB-regional project descriptions.

(6) *Milestone chart.* It should provide time lines of major tasks covering the duration of the proposed project.

(7) *Budget and Application Forms* Both NOAA and CSCOR/COP-specific application forms may be obtained at the CSCOR/COP Grants website. Forms may be viewed and, in most cases, filled in by computer. All forms must be printed, completed, and mailed to CSCOR/COP. If applicants are unable to access this information, they may call the CSCOR/COP grants administrator previously listed in the section entitled **FOR FURTHER INFORMATION CONTACT**. At time of proposal submission, all applicants must submit the Standard Form, SF–424 (Rev 7–97) Application for Federal Assistance, to indicate the total amount of funding proposed for the whole project period. Applicants must also submit a COP Summary Proposal Budget Form for each fiscal year increment. Multi-institution proposals must include a Summary Proposal Budget Form for each institution. Use of this budget form will provide for a detailed annual budget and for the level of detail required by the CSCOR/COP program staff to evaluate the effort to be invested by investigators and staff on a specific project. The COP budget form is compatible with forms in use by other agencies that participate in joint projects with CSCOR/COP and can be found on the CSCOR/COP home page under COP Grants Information, Part D. All applications must include a budget narrative and a justification to support all proposed budget categories. The SF–424A, Budget Information (Non-Construction) Form, will be requested only from those applicants subsequently recommended for award.

Ship time needs should be clearly identified in the proposed budget. The investigator is responsible for requesting ship time and for meeting all requirements to ensure the availability of requested ship time. Copies of relevant ship time request forms should be included with the proposal.

(8) *Biographical sketch.* With each proposal, the following must be included: abbreviated curriculum vitae, up to two pages per investigator; a list of up to five publications most closely related to the proposed project and up to five other significant publications; and a list of all persons (including their organizational affiliation), in alphabetical order, who have collaborated on a project, book, article, or paper within the last 48 months must be included. If no collaborators exist this should be so indicated. Students, post-doctoral associates, and graduate and postgraduate advisors of the PI should also be disclosed. This information is used to help identify potential conflicts of interest or bias in the selection of reviewers.

(9) *Proposal format and assembly.* The original proposal should be clamped in the upper left-hand corner, but left unbound. The 19 additional copies can be stapled in the upper left-hand corner or bound on the left edge. The page margin must be one inch (2.5 cm) at the top, bottom, left, and right, and the typeface standard 12–point size must be clear and easily legible. Proposals should be single spaced.

Part II: Further Supplementary Information

(1) *Program authorities.* For a list of all program authorities for the Coastal Ocean Program, see General Grant Administration Terms and Conditions of the Coastal Ocean Program published in the **Federal Register** (66 FR 63019, December 4, 2001) and at the CSCOR/COP home page. Specific authority cited for this announcement is 16 U.S.C. 1442 and Pub.L. 105–383, title VI, Nov. 13, 1998, 112 Stat. 3447.

(2) *Catalog of Federal Domestic Assistance (CFDA) number.* The CFDA number for the Coastal Ocean Program is 11.478.

(3) *Program description.* For complete CSCOR/COP program descriptions, see General Grant Administration Terms and Conditions of the Coastal Ocean Program published in the **Federal Register** (66 FR 63019, December 4, 2001).

(4) *Funding availability.* Funding is contingent upon receipt of fiscal years 2002 - 2006 Federal appropriations. Approximately $2,000,000 per fiscal year will be available for supporting studies proposed by submissions to this announcement. Support in out years after FY 2002 is contingent upon the availability of funds. It is anticipated that three to five MERHAB-Targeted research projects will be funded at approximately $100,000 per year for up to three years and that two to three MERHAB-regional, intensive monitoring proposals will be funded at approximately $600,000 per year for up to five years.

If an application is selected for funding, NOAA has no obligation to provide any additional prospective

funding in connection with that award in subsequent years. Continuation of an award to increase funding or extend the period of performance is based on satisfactory performance and is at the total discretion of the funding agency. Priority for these funds will be given to proposals that promote balanced coverage of the science objectives stated under this announcement.

Publication of this document does not obligate the CSCOR/COP to any specific award or to obligate any part of the entire amount of funds available. Recipients and subrecipients are subject to all Federal laws and agency policies, regulations, and procedures applicable to Federal financial assistance awards.

(5) *Matching requirements*. None.

(6) *Type of funding instrument*. Either project grants or cooperative agreements will be used for non-Federal applicants. Interagency transfer agreements or other appropriate mechanisms other than project grants or cooperative agreements will be used for Federal applicants.

(7) *Eligibility criteria*. For complete eligibility criteria for the CSCOR/COP, see CSCOR/COP's General Grant Administration Terms and Conditions annual document in the **Federal Register** (66 FR 63019, December 4, 2001) and the CSCOR/COP home page. Eligible applicants are institutions of higher education, not-for-profit institutions, state, local and Indian tribal governments and Federal agencies. CSCOR/COP will accept proposals that include foreign researchers as collaborators with researchers who are affiliated with a U.S. academic institution, Federal agency, or other non-profit organization.

Applications from non-Federal and Federal applicants will be competed against each other. Proposals selected for funding from non-Federal applicants will be funded through a project grant or cooperative agreement under the terms of this notice. Proposals from NOAA employees selected for funding shall be effected by an intra-agency fund transfer. Proposals selected for funding from a non-NOAA Federal agency will be funded through an inter-agency transfer.

NOTE: Before non-NOAA Federal applicants may be funded, they must demonstrate that they have legal authority to receive funds from another Federal agency in excess of their appropriation. Because this announcement is not proposing to procure goods or services from applicants, the Economy Act (31 U.S.C. 1535) is not an appropriate legal basis.

(8) *Award period*. Full proposals for targeted projects can cover a project period of up to three years, and full proposals for regional, intensive monitoring projects can cover a project period of up to five years. Multi-year project period funding may be funded incrementally on an annual basis, but, once awarded, multi-year projects will not compete for funding in subsequent years. Each annual award shall require an Implementation Plan and statement of work that can be easily divided into annual increments of meaningful work representing solid accomplishments (if prospective funding is not made available, or is discontinued).

(9) *Indirect costs*. Regardless of any approved indirect cost rate applicable to the award, the maximum dollar amount of allocable indirect costs for which DOC will reimburse the recipient shall be the lesser of: (a) the line item amount for the Federal share of indirect costs contained in the approved budget of the award; or (b) the Federal share of the total allocable indirect costs of the award based on the indirect cost rate approved by a cognizant or oversight Federal agency and current at the time the cost was incurred, provided the rate is approved on or before the award end date.

(l0) *Application forms and kit*. For complete information on application forms for the CSCOR/COP, see CSCOR/COP's annual General Grant Administration Terms and Conditions Document in the **Federal Register** (66 FR 63019, December 4, 2001) at the CSCOR/COP home page and the information given under Required Elements, paragraph (7) Budget.

(11) *Project funding priorities*. For description of project funding priorities, see CSCOR/COP's annual General Grant Administration Terms and Conditions Document in the **Federal Register** (66 FR 63019, December 4, 2001) and the CSCOR/COP home page.

(12) *Evaluation criteria*. For complete information on evaluation criteria, see CSCOR/COP's annual General Grant Administration Terms and Condition Document in the **Federal Register** (66 FR 63019, December 4, 2001) and the CSCOR/COP home page.

(13) *Selection procedures*. For complete information on selection procedures, see CSCOR/COP's annual General Grant Administration Terms and Conditions Document in the **Federal Register** (66 FR 63019, December 4, 2001) and the CSCOR/COP home page. All proposals received under this specific Document will be evaluated and ranked individually in accordance with the assigned weights of the above evaluation criteria by independent peer mail review and/or panel review. No consensus advice will be given by the independent peer mail review or the review panel.

(14) *Other requirements*. (a) For a complete description of other requirements, see CSCOR/COP's annual General Grant Administration Terms and Conditions Document in the **Federal Register** (66 FR 63019, December 4, 2001) and the CSCOR/COP home page. NOAA has specific requirements that environmental data be submitted to the National Oceanographic Data Center (see section 16, Data Archiving).

(b) the Department of Commerce Pre-Award Notification Requirements for Grants and Cooperative Agreements contained in the **Federal Register** (66 FR 49917, October 1, 2001) are applicable to this solicitation. However, please note that the Department of Commerce will not implement the requirements of Executive Order 13202 (66 FR 49921), pursuant to guidance issued by the Office of Management and Budget in light of a court opinion which found that the Executive Order was not legally authorized. See Building and Construction Trades Department v. Allbaugh, 172 F. Supp. 2d 138 (D.D.C. 2001). This decision is currently on appeal. When the case has been finally resolved, the Department will provide further information on implementation of Executive Order 13202.

(c) Please note that NOAA is developing a policy on internal overhead charges; NOAA scientists considering submission of proposals should contact the appropriate CSCOR/COP Program Manager for the latest information.

(15) *Intergovernmental review*. Applications under this program are not subject to Executive Order 12372, ''Intergovernmental Review of Federal Programs.'' It has been determined that this notice is not significant for purposes of Executive Order 12866. Pursuant to 5 U.S.C. 553(a) (2), an opportunity for public notice and comment is not required for this notice relating to grants, benefits and contracts. Because this notice is exempt from the notice and comment provisions of the Administrative Procedure Act, a Regulatory Flexibility Analysis is not required, and none has been prepared. It has been determined that this notice does not contain policies with Federalism implications as that term is defined in Executive Order 13132.

(16) *Data archiving*. Any data collected in projects supported by CSCOR/COP must be delivered to a National Data Center (NDC), such as the National Oceanographic Data Center (NODC), in a format to be determined by the institution, the NODC, and Program

Officer. It is the responsibility of the funded institution for the delivery of these data; the DOC will not provide additional support for delivery beyond the award. Additionally, all biological cultures established, molecular probes developed, genetic sequences identified, mathematical models constructed, or other resulting information products established through support provided by CSCOR/COP are encouraged to be made available to the general research community at no or a modest handling charge (to be determined by the institution, Program Officer, and DOC). For more details, refer to CSCOR/COP data policy posted at the COP home page.

(17) This notification involves collection-of-information requirements subject to the Paperwork Reduction Act (PRA). The use of Standard Forms 424, 424A, 424B, and SF-LLL has been approved by the Office of Management and Budget (OMB) under control numbers 0348–0043, 0348–0044, 0348–0040 and 0348–0046.

The following requirements have been approved by OMB under control number 0648–0384; a Summary Proposal Budget Form (30 minutes per response), a Project Summary Form (30 minutes per response), a standardized format for the annual Performance Report (5 hours per response), a standardized format for the Final Report (10 hours per response), and the submission of up to 20 copies of proposals (10 minutes per response). The response estimates include the time for reviewing instructions, searching existing data sources, gathering and maintaining the data needed, and completing and reviewing the collection of information.

Send comments regarding these requirements and the burden estimate, or any other aspect of this collection of information, including suggestions for reducing this burden, to leslie.mcdonald@noaa.gov. Copies of these forms and formats can be found on the CSCOR/COP home page under Grants Information sections, Parts D and F.

Notwithstanding any other provision of law, no person is required to respond to, nor shall any person be subject to a penalty for failure to comply with a collection of information subject to the requirements of the Paperwork Reduction Act, unless that collection displays a currently valid OMB control number.

Dated: March 11, 2002.

Jamison S. Hawkins,

Deputy Assistant Administrator for Ocean Services and Coastal Zone Management.

[FR Doc. 02–6747 Filed 3–19–02; 8:45 am]

BILLING CODE 3510–JS–S

DEPARTMENT OF COMMERCE

National Oceanic and Atmospheric Administration

[I.D. 030602F]

Atlantic Highly Migratory Species; Advisory Panel Meetings

AGENCY: National Marine Fisheries Service (NMFS), National Oceanic and Atmospheric Administration (NOAA), Commerce.

ACTION: Notification of Advisory Panel meetings.

SUMMARY: NMFS will hold joint meetings of the Atlantic Highly Migratory Species Advisory Panel (HMS AP) and the Atlantic Billfish Advisory Panel (Billfish AP), April 1 through 3, 2002, in Silver Spring, MD. The intent of these meetings is to consider alternatives for the conservation and management of highly migratory species.

DATES: The joint HMS-Billfish AP meetings will be held from 1 p.m. to 5 p.m. on Monday, April 1; from 8 a.m. to 5 p.m. on Tuesday, April 2; and from 8 a.m. to 3:30 p.m. on Wednesday, April 3, 2002.

ADDRESSES: The AP meetings will be held in the Holiday Inn, 8777 Georgia Ave. (Rt. 97), Silver Spring, MD 20910. Phone: 301–589–0800.

An agenda and materials related to the AP meeting are available from Othel Freeman, Highly Migratory Species Management Division, 1315 East-West Highway, Silver Spring, MD 20910, 301–713–2347.

FOR FURTHER INFORMATION CONTACT: Dr. Ronald G. Rinaldo, 301–713–2347.

SUPPLEMENTARY INFORMATION: The actions to be discussed by the APs are necessary to address requirements of the Magnuson-Stevens Fishery Conservation and Management Act and to implement recommendations of the International Commission for the Conservation of Atlantic Tunas as required by the Atlantic Tunas Convention Act, for the conservation and management of highly migratory species.

Special Accomodations

These meetings are physically accessible to people with disabilities. Requests for sign language interpretation or other auxiliary aids should be directed to Dr. Rinaldo (see **FOR FURTHER INFORMATION CONTACT**) at least 7 days prior to the meetings.

Authority: 16 U.S.C. 961 *et seq.*, and 16 U.S.C. 1801 *et seq.*

Dated: March 13, 2002.

John H. Dunnigan,

Director, Office of Sustainable Fisheries, National Marine Fisheries Service.

[FR Doc. 02–6712 Filed 3–15–02; 5:02 pm]

BILLING CODE 3510–22–S

DEPARTMENT OF COMMERCE

National Oceanic and Atmospheric Administration

[I.D. 031402D]

New England Fishery Management Council; Public Meetings

AGENCY: National Marine Fisheries Service (NMFS), National Oceanic and Atmospheric Administration (NOAA), Commerce.

ACTION: Notice of public meetings.

SUMMARY: The New England Fishery Management Council (Council) is scheduling public meeting of its Groundfish and Monkfish Oversight Committees in April, 2002. Recommendations from these committees will be brought to the full Council for formal consideration and action, if appropriate.

DATES: These meetings will be held between April 9 and 11, 2002. *See* **SUPPLEMENTARY INFORMATION** for specific dates and times.

ADDRESSES: The meetings will be held in New London, CT and Warwick, RI. *See* **SUPPLEMENTARY INFORMATION** for specific locations.

Council address: New England Fishery Management Council, 50 Water Street, Newburyport, MA 01950.

FOR FURTHER INFORMATION CONTACT: Paul J. Howard, Executive Director, New England Fishery Management Council (978) 465-0492; telephone: (978) 465-0492.

SUPPLEMENTARY INFORMATION: *Tuesday, April 9, 2002 at 9:30 a.m.*–Groundfish Oversight Committee Meeting.

Location: Radisson Hotel, 35 Governor Winthrop Blvd, New London, CT 06320; telephone: (860) 443-7000.

The Groundfish Oversight Committee will continue development of Amendment 13 to the Northeast Multispecies Fishery Management Plan (FMP). Amendment 13 will end overfishing and establish rebuilding

schedules for overfished stocks. At a meeting on February 27, 2002, the New England Council decided to develop groundfish management measures for five broad areas and one user group: inshore Gulf of Maine, offshore Gulf of Maine, eastern Georges Bank, western Georges Bank, Southern New England/Mid Atlantic, and recreational/charter/party. This meeting will focus on commercial fishing for groundfish in the Southern New England/Mid-Atlantic area, the boundaries for this area will be determined at the March 27, 2002 Groundfish Committee meeting. Interested parties will be consulted to identify management measures that will achieve specific biological, economic, and social objectives identified by the Council. Such measures may include, but are not limited to, trip or possession limits, changes to the days-at-sea program, year-round or seasonal closed areas, or gear changes. The committee will consider these suggested measures and will develop a recommendation that will be reviewed by the Council at a later date. After Council approval, the measures will be analyzed and included in a draft supplemental environmental impact statement. The committee may also consider alternatives to this area management approach if technical advice received at the March 19, 2002 Council meeting suggests it is not feasible.

Wednesday, April 10, 2002 at 9:30 a.m. and Tuesday, April 11, 2002 at 8:30 a.m.–Monkfish Oversight Committee Meeting.

Location: Radisson Airport Hotel Providence; 2081 Post Road, Warwick, RI 02886; telephone: (401) 739-3000.

The Committee will review information provided by the Advisory Panel, Plan Development Team and/or Councils' staffs and continue development of Amendment 2 management alternatives. Measures that may be included or adjusted in Amendment 2 include, but are not limited to, permit qualification for vessels fishing south of 38° N, trip limits, days-at-sea allocations, closed areas, minimum fish size, minimum mesh size, and area-specific management programs for the Northern and Southern Fishery Management Areas, as well as for the offshore fishery in the Southern Area. Amendment 2 will also implement revisions to the monkfish overfishing definitions. Measures to be considered in Amendment 2 will be designed to achieve fishing mortality targets as well as to minimize bycatch, interactions with protected species and fishery impacts on essential fish habitat.

Although non-emergency issues not contained in this agenda may come before this group for discussion, those issues may not be the subject of formal action during this meeting. Action will be restricted to those issues specifically listed in this notice and any issues arising after publication of this notice that require emergency action under section 305(c) of the Magnuson-Stevens Act, provided the public has been notified of the Council's intent to take final action to address the emergency.

Special Accommodations

These meetings are physically accessible to people with disabilities. Requests for sign language interpretation or other auxiliary aids should be directed to Paul J. Howard (*see* **ADDRESSES**) at least 5 days prior to the meeting dates.

Dated: March 15, 2002.

Richard W. Surdi,

Acting Director, Office of Sustainable Fisheries, National Marine Fisheries Service.

[FR Doc. 02–6749 Filed 3–19–02; 8:45 am]

BILLING CODE 3510–22–S

DEPARTMENT OF COMMERCE

National Oceanic and Atmospheric Administration

[I.D. 031102B]

Pacific Fishery Management Council; Public Meeting

AGENCY: National Marine Fisheries Service (NMFS), National Oceanic and Atmospheric Administration (NOAA), Commerce.

ACTION: Notice of public meeting.

SUMMARY: The Groundfish Stock Assessment Review (STAR) Panel for bocaccio and canary rockfish will hold a work session which is open to the public.

DATES: The bocaccio and canary rockfish STAR Panel will meet beginning at 9 a.m., April 15, 2002. The meeting will continue on April 16, 2002 beginning at 8 a.m. through April 19, 2002. The meetings will end at 5 p.m. each day, or as necessary to complete business.

ADDRESSES: The Pacific bocaccio and canary rockfish STAR Panel meeting will be held at NMFS Northwest Fisheries Science Center, Auditorium, 2725 Montlake Blvd. E, Seattle, WA 98112; telephone: 206–860–3200.

Council address: Pacific Fishery Management Council, 7700 NE Ambassador Place, Suite 200, Portland, OR 97220-1384.

FOR FURTHER INFORMATION CONTACT: Mr. Chuck Tracy, Staff Officer; 503–326–6352.

SUPPLEMENTARY INFORMATION: The purpose of the meeting is to review draft stock assessment documents and any other pertinent information, work with the Stock Assessment Team to make necessary revisions, and produce a STAR Panel report for use by the Council family and other interested persons.

Entry to the Northwest Fisheries Science Center requires identification with photograph (such as a student ID, state drivers license, etc.). A security guard will review the identification and issue a Visitor's Badge valid only for the date of the meeting.

Although nonemergency issues not contained in STAR Panel agenda may come before the STAR Panel for discussion, those issues may not be the subject of formal Panel action during this meeting. STAR Panel action will be restricted to those issues specifically listed in this notice, and any issues arising after publication of this notice that require emergency action under section 305(c) of the Magnuson-Stevens Fishery Conservation and Management Act, provided the public has been notified of the Panel's intent to take final action to address the emergency.

Special Accommodations

The meeting is physically accessible to people with disabilities. Requests for sign language interpretation or other auxiliary aids should be directed to Ms. Carolyn Porter at 503–326–6352 at least 5 days prior to the meeting date.

Dated: March 15, 2002.

Richard W. Surdi,

Acting Director, Office of Sustainable Fisheries, National Marine Fisheries Service.

[FR Doc. 02–6750 Filed 3–19–02; 8:45 am]

BILLING CODE 3510–22–S

COMMITTEE FOR THE IMPLEMENTATION OF TEXTILE AGREEMENTS

Reconfirmation of a Previous Directive Concerning Visa and Quota Requirements for Textiles and Textile Products Entered as Sets

March 15, 2002.

AGENCY: Committee for the Implementation of Textile Agreements (CITA).

ACTION: Issuing a directive to the Commissioner of Customs reconfirming a previous directive.

EFFECTIVE DATE: March 18, 2002.

FOR FURTHER INFORMATION CONTACT: Martin Walsh, International Trade Specialist, Office of Textiles and Apparel, U.S. Department of Commerce, (202) 482–3400.

SUPPLEMENTARY INFORMATION:

Authority: Executive Order 11651 of March 3, 1972, as amended; Section 204 of the Agricultural Act of 1956, as amended (7 U.S.C. 1854).

In a notice and letter to the Commissioner of Customs published in the **Federal Register** on August 24, 1989 (54 FR 35223), CITA directed the U.S. Customs Service to apply all otherwise applicable visa and quota requirements to textiles and textile products which are classified as components of a set. This directive applied to all items which, if imported separately, would have required a visa and the reporting of quota. Recently, there has been uncertainty concerning the continuing applicability of this directive. The letter published below reconfirms the previously published directive.

D. Michael Hutchinson,

Acting Chairman, Committee for the Implementation of Textile Agreements.

Committee for the Implementation of Textile Agreements

March 15, 2002.

Commissioner of Customs,
Department of the Treasury, Washington, DC 20229.

This letter reconfirms the directive of August 18, 1989 that clarified the intent of the Committee for the Implementation of Textile Agreements on the applicability of visa requirements and quota reporting of textiles and textile products entered as components of sets under General Rule of Interpretation (GRI) 3 of the Harmonized Tariff Schedule (HTS).

Effective on March 18, 2002, the directive of August 18, 1989 is reissued as follows:

Under the terms of Section 204 of the Agricultural Act of 1956, as amended (7 U.S.C. 1854); and in accordance with the provisions of Executive Order 11651 of March 3, 1972, as amended; all applicable visa and quota requirements will apply for textiles and textile products which are classified as components of a set. This rule applies to all items which, if imported separately, would have required a visa and the reporting of quota.

Effective on March 18, 2002, you are directed to prohibit entry for consumption or withdrawal from warehouse for consumption into the United States (i.e., the 50 states, the District of Columbia and the Commonwealth of Puerto Rico) of any textile item for which classification is claimed as sets under GRI 3 of the HTS, where a separate textile category currently exists or comes into existence requiring separate reporting of the components forming those sets.

Entry shall be permitted if all visa and quota requirements are met.

The Committee for the Implementation of Textile Agreements has determined that these actions fall within the foreign affairs exception to the rulemaking provisions of 5 U.S.C. 553(a)(1).

Sincerely,
D. Michael Hutchinson,
Acting Chairman, Committee for the Implementation of Textile Agreements.

[FR Doc.02–6804 Filed 3–18–02; 9:54 am]

BILLING CODE 3510–DR–S

DEPARTMENT OF DEFENSE

Department of the Air Force

HQ USAF Scientific Advisory Board

AGENCY: Department of the Air Force, DoD.

ACTION: Notice of meeting.

SUMMARY: Pursuant to Public Law 92–463, notice is hereby given of the forthcoming meeting of the Task Force on the Threat of Asymmetric Attack. The purpose of the meeting is to allow the SAB and study leadership to review their progress on strategies for the conduct of asymmetric warfare. This meeting will be closed to the public.

DATES: April 1, 2002.

ADDRESSES: Frost & Associates, 660 Southpointe Court, Suite 210, Colorado Springs, CO 80906.

FOR FURTHER INFORMATION CONTACT: Mr. Robert Ripperger, Air Force Scientific Advisory Board Secretariat, 1180 AirForce Pentagon, Rm 5D982, Washington DC 20330–1180, (703) 697–4811.

Pamela D. Fitzgerald,

Air Force Federal Register Liaison Officer.

[FR Doc. 02–6679 Filed 3–19–02; 8:45 am]

BILLING CODE 5001–05–U

DEPARTMENT OF DEFENSE

Department of the Army

Preparation of Environmental Impact Statement (EIS) for Military Training Activities at Makua Military Reservation, Oahu, Hawaii

AGENCY: Department of the Army, DoD.

ACTION: Notice of intent.

SUMMARY: The Army proposed to resume consistent military training activities at Makua Military Reservation (MMR), Oahu, Hawaii, to provide for company level, modified live-fire exercises. In accordance with the Settlement Agreement and Stipulated Order between Malama Makua and the United States Department of Defense, filed 4 October 2001 (the ''Settlement Agreement''), the Army will conduct a limited number of live-fire training exercises during the term specified within for the preparation of the subject EIS. The Army needs to conduct a minimum of 18 company-level, combined arms, live-fire exercises per year. Other military components that have used Makua in the past include the Marine Corps, Army Reserves, and the Hawaii Army National Guard, which further increases the total number of required company combined-arms live-fire exercises (CALFEXs) per year. Conducting the required number of company CALFEXs is critical to maintaining the readiness of all military units assigned or stationed in Hawaii. Training at the company level is one of the key building blocks in the Army's progressive training doctrine where smaller units first train as smaller units and then train collectively as part of a larger unit. The training that a new infantry company commander receives during a company-level CALFEX is invaluable in teaching him the skills required to coordinate the combined arms support provided by helicopter, artillery, mortar, and combat engineer support teams when attacking an objective. These communication and coordination skills are essential later when several companies join together and train/fight as a battalion under the control of a battalion commander. The EIS will address, among other things, the potential direct, indirect and cumulative environmental impacts associated with the proposal to continue military training activities at MMR. The EIS development process will be conducted in accordance with the aforementioned Settlement Agreement and Stipulated Order.

ADDRESSES: Written comments may be forwarded to Mr. Calvin K. Mashita, U.S. Army Corps of Engineers, Honolulu Engineer District, Programs and Project Management Division, ATTN: CEPOH–PP–E (Mashita), Building 230, Fort Shafter, Hawaii 96858–5440.

FOR FURTHER INFORMATION CONTACT:

Makua training activities: Colonel William E. Ryan III, (808) 656–1289, fax (808) 656–1259; email *William.ryaniii@usace.army.mil* or by writing to Director of Public Works, U.S. Army Garrison Hawaii (USAG–HI), Schofield Barracks, Hawaii 96857–5013.

EIS information: Mr. Calvin K. Mashita, (808) 438–8417; fax (808) 438–8865; email *calvin.k.mashita@poh01.usace.army.mil* or by writing to Mr. Mashita at the above address.

SUPPLEMENTARY INFORMATION: Proposed alternatives to be considered may include, but not be limited to, the following:

(1) *Alternative 1:* Modified Live-Fire Training at Makua Military Reservation

(Proposed Action). The Army would conduct company CALFEXs at MMR but with certain restrictions. In particular, the Army would eliminate the use of TOW missiles, incendiary munitions, and tracers. Under this alternative, the Army will not be limited to the current number of CALFEXs specified in the Settlement Agreement.

(2) *Alternative 2:* No action. The Army will not conduct live-fire training exercises at MMR, except for the limited number of modified CALFEXs authorized by the Settlement Agreement.

(3) *Alternative 3:* Conduct CALFEX Training at an Alternate Site. Personnel and equipment required for CALFEX Training would be transported to one of the following alternate sites:

(a) *Alternative 3A:* Pohakuloa Training Area (PTA) on the Big Island of Hawaii.

(b) *Alternative 3B:* Continental United States (CONUS).

(c) *Alternative 3C:* A replacement training facility at another Army installation on Oahu. The Army would construct another facility on Oahu that could accommodate the company CALFEXs.

(4) *Alternative 4:* Return to Training Less Restrictive Than the Proposed Action. The Army would train with less restrictions on the types of weapon systems and the numbers of training exercises. For example, the Army would resume the use of tracer ammunition.

(5) *Alternative 5:* Conduct Non-Live Fire Training at MMR. The Army would conduct training exercises at MMR but without any live firing of weapons or devises otherwise of an incendiary nature.

Scoping Process: Federal, state and local agencies, and the public are invited to participate in the scoping process for the completion of this EIS. The scoping process will help identify potential impacts and key issues to be analyzed in the EIS. Individuals or organizations wishing to participate in the scoping process are invited to participate in a scoping meeting to be held in the Waianae District, on the island of Oahu. Notification of the time and location for the scoping meeting will be published in local newspapers. Additionally, written comments on the scope of analysis are invited and will be accepted within 15 days after the scoping meeting.

Dated: March 15, 2002.

Raymond J. Fatz,

Deputy Assistant Secretary of the Army, (Environment, Safety and Occupational Health) OASA(I&E).

[FR Doc. 02–6687 Filed 3–19–02; 8:45 am]

BILLING CODE 3710–08–M

DEPARTMENT OF ENERGY

[Docket No. EA–260]

Application To Export Electric Energy; EPCOR Merchant and Capital (US) Inc.

AGENCY: Office of Fossil Energy, DOE.

ACTION: Notice of application.

SUMMARY: EPCOR Merchant and Capital (US) Inc. (EPCOR) has applied for authority to transmit electric energy from the United States to Canada pursuant to section 202(e) of the Federal Power Act.

DATES: Comments, protests or requests to intervene must be submitted on or before April 4, 2002.

ADDRESSES: Comments, protests or requests to intervene should be addressed as follows: Office of Coal & Power Import/Export (FE–27), Office of Fossil Energy, U.S. Department of Energy, 1000 Independence Avenue, SW, Washington, DC 20585–0350 (FAX 202–287–5736).

FOR FURTHER INFORMATION CONTACT: Rosalind Carter (Program Office) 202–586–7983 or Michael Skinker (Program Attorney) 202–586–2793.

SUPPLEMENTARY INFORMATION: Exports of electricity from the United States to a foreign country are regulated and require authorization under section 202(e) of the Federal Power Act (FPA) (16 U.S.C. 824a(e)).

On February 7, 2002, the Office of Fossil Energy (FE) of the Department of Energy (DOE) received an application from EPCOR to transmit electric energy from the United States to Canada. EPCOR is a Delaware corporation with its principal place of business in Calgary, Alberta, Canada. EPCOR is a power marketer and will have title to any electricity exported to Canada.

EPCOR will purchase the power to be exported from electric utilities and federal power marketing agencies within the United States and arrange for the delivery of electric energy to Canada over the existing international transmission facilities owned by Basin Electric Power Cooperative, Bonneville Power Administration, Citizen Utilities, Eastern Maine Electric Cooperative, International Transmission Company, Joint Owners of the Highgate Project, Long Sault, Inc., Maine Electric Power Company, Maine Public Service Company, Minnesota Power Inc., Minnkota Power Cooperative, New York Power Authority, Niagara Mohawk Power Corporation, Northern States Power, and Vermont Electric Transmission Company. The construction, operation, maintenance, and connection of each of the international transmission facilities to be utilized by EPCOR, as more fully described in the application, has previously been authorized by a Presidential permit issued pursuant to Executive Order 10485, as amended.

EPCOR has requested that the Department of Energy (DOE) expedite the processing of this application so that EPCOR may assist in alleviating unexpected power shortages in the Canadian Providence of Alberta.

Procedural Matters: Any person desiring to become a party to this proceeding or to be heard by filing comments or protests to this application should file a petition to intervene, comment or protest at the address provided above in accordance with §§ 385.211 or 385.214 of the FERC's Rules of Practice and Procedures (18 CFR 385.211, 385.214). Fifteen copies of each petition and protest should be filed with DOE on or before the date listed above.

Comments on the EPCOR application to export electric energy to Canada should be clearly marked with Docket EA–260. Additional copies are to be filed directly with Rob Imbeau, EPCOR Merchant and Capital (US) Inc., c/o EPCOR Merchant and Capital L.P., 505 2nd Street, SW, 8th Floor, Calgary, Alberta T2P 1N8 Canada AND Timothy J. Moran, Victor A. Contract, Skadden, Arps, Slate, Meagher & Flom LLP, 1440 New York Avenue, NW, Washington, DC 20005–2111.

A final decision will be made on this application after the environmental impacts have been evaluated pursuant to the National Environmental Policy Act of 1969, and a determination is made by the DOE that the proposed action will not adversely impact on the reliability of the U.S. electric power supply system.

Copies of this application will be made available, upon request, for public inspection and copying at the address provided above or by accessing the Fossil Energy Home Page at *http://www.fe.doe.gov.* Upon reaching the Fossil Energy Home page, select ''Electricity Regulation,'' and then ''Pending Procedures'' from the options menus.

Issued in Washington, DC, on March 13, 2002.

Anthony J. Como,

Deputy Director, Electric Power Regulation, Office of Coal & Power Import/Export, Office of Coal & Power Systems, Office of Fossil Energy.

[FR Doc. 02–6686 Filed 3–19–02; 8:45 am]

BILLING CODE 6450–01–P

DEPARTMENT OF ENERGY

Worker Advocacy Advisory Committee Meeting

AGENCY: Department of Energy.

ACTION: Notice of open meeting.

SUMMARY: This notice announces a meeting of the Worker Advocacy Advisory Committee. The Federal Advisory Committee Act (Public Law 92–463, 86 Stat. 770), requires that notice of this meeting be published in the **Federal Register**.

DATES: Thursday, April 4, 2002, 12:30–5:30 p.m. and Friday, April 5, 2001, 8:00 a.m.–12:30 p.m.

ADDRESSES: Loews L'Enfant Plaza Hotel, 480 L'Enfant Plaza, SW., Washington, DC.

FOR FURTHER INFORMATION CONTACT: Judy Keating, Executive Administrator, Worker Advocacy Advisory Committee, U.S. Department of Energy, EH–8, 1000 Independence Avenue, SW, Washington, DC 20585, Telephone Number 202–586–7551, E-mail: judy.keating@eh.doe.gov.

SUPPLEMENTARY INFORMATION:

Purpose of the Meeting: To provide advice to the Director of the Office of Worker Advocacy of the Department of Energy on plans, priorities, and strategies for assisting workers who have been diagnosed with work-related illnesses.

Tentative Agenda

Welcome and Introductions
Organization of the Office of Worker Advocacy
Status of Interagency Work
Discussion of Subcommittee Topics, including claims processing, and Insurer and Contractor Relations
Public Comment
Next Steps/Path Forward

Public Participation: This two-day meeting is open to the public on a first-come, first-serve basis because of limited seating. Written statements may be filed with the committee before or after the meeting. Members of the public who wish to make oral statements pertaining to agenda items should contact Judy Keating at the address or telephone listed above. Requests to make oral statements must be made and received five days prior to the meeting; reasonable provision will be made to include the statement in the agenda. The Chair of the committee is empowered to conduct the meeting in a fashion that will facilitate the orderly conduct of business.

Minutes: The minutes of this meeting will be available for public review and copying at the Freedom of Information Reading Room, 1E–190, Forrestal Building, 1000 Independence Avenue, SW., Washington, DC, between 9 a.m. and 4 p.m., Monday through Friday, except holidays.

Issued in Washington, DC on March 15, 2002.

Rachel M. Samuel,

Deputy Advisory Committee Management Officer.

[FR Doc. 02–6763 Filed 3–19–02; 8:45 am]

BILLING CODE 6450–01–P

DEPARTMENT OF ENERGY

Federal Energy Regulatory Commission

[Docket No. CP02–6–001]

Colorado Interstate Gas Company; Notice of Amendment to Application

March 14, 2002.

Take notice that on March 4, 2002, Colorado Interstate Gas Company (CIG), Post Office Box 1087, Colorado Springs, Colorado 80944, filed pursuant to section 7(c) of the Natural Gas Act (NGA) and Part 157 of the Commission's Regulations in Docket No. CP02–6–001 an amendment to its pending application in Docket No. CP02–6–000 to modify the proposed expansion of its existing interstate pipeline system by reducing the lengths of the proposed loop line segments, all as more fully set forth in the application which is on file with the Commission and open to public inspection. This filing may also be viewed on the web at *http://www.ferc.gov* using the ''RIMS'' link, select ''Docket #'' and follow the instructions (call 202–208–2222 for assistance).

In its application in Docket No. CP02–6–000, CIG stated that it proposed to construct and operate facilities necessary to transport additional volumes of approximately 57.8 MMcf per day (55 MDth per day) of natural gas out of the Raton Basin Area in Colorado and New Mexico. In addition, CIG stated that it proposed to construct and operate facilities south of its Keyes Compressor Station to allow Raton Basin shippers to deliver incremental quantities of gas to interconnections with the interstate pipeline systems of El Paso Natural Gas Company and Northern Natural Gas Company. To accomplish this, CIG proposed to construct two loop line segments along its Campo Lateral and a loop of a portion of its existing Line 3A south of the existing Keyes Compressor Station.

CIG states that, subsequently, one of the shippers holding rights to a portion of the proposed incremental capacity on the Raton Basin 2002 Expansion Project was unable to meet the terms set forth in its Transportation Precedent Agreement with CIG, resulting in the termination of this agreement. CIG states that, as a result of the termination of the agreement, it now proposes to amend its application in this proceeding to revise the facilities to be constructed. Specifically, CIG states that it plans to reduce the lengths of the proposed pipeline loop segments, as follows:

(1) Reduce the length of 16-inch diameter pipeline loop of CIG's existing Campo Lateral from 25.61 miles to 22.10 miles; this loop line would extend from the outlet of the CIG's Trinidad Compressor Station in Section 25, Township 32 South, Range 63 West to a point west of Trinchera Creek in Section 21, Township 33 South, Range 59 West, all in Las Animas County, Colorado.

(2) Reduce the length of 16-inch diameter pipeline loop of CIG's existing Campo Lateral from 28.14 miles to 24.20 miles; this loop line would extend from the outlet of CIG's Kim Compressor Station in Section 31, Township 32 South, Range 54 West, Las Animas County, Colorado to a point east of County Road 1 in Section 29, Township 32 South, Range 50 West, Baca County, Colorado.

(3) Reduce the length of 20-inch diameter pipeline loop of CIG's existing Line 3A from 14.40 miles to 7.67 miles, this loop line would extend from the outlet of CIG's Keyes Compressor Station in Section 17, Township 5 North, Range 7 East to Gate 9/Keyes Meter Station in Section 23, Township 4 North, Range 7 East, all in Cimarron County, Oklahoma.

CIG states that the revised Campo Lateral loop line segments will increase the take-away capacity from the Raton Basin Area by approximately 47.3 MMcf per day (45 MDth per day). CIG further states that the 3A loop line will facilitate the delivery of incremental volumes to points on the southern end of its transmission system.

CIG estimates that the proposed cost of the expansion will be $22,070,400. Further, CIG states that the combination of existing and revised incremental

entitlements represent 100 percent of CIG's capacity out of the Raton Basin Area through the Campo Lateral.

Any questions regarding this amendment should be directed to Robert T. Tomlinson; Director, Regulatory Affairs; at (719) 520–3788; Colorado Interstate Gas Company; P.O. Box 1087; Colorado Springs, Colorado 80944. process.

Any person desiring to be heard or to make any protest with reference to said document should, on or before April 4, 2002, file with the Federal Energy Regulatory Commission; 888 First Street, NE., Washington, DC 20426 a protest or motion to intervene in accordance with the requirements of Rule 211 or 214 of the Commission's Rules of Practice and Procedure (18 CFR 385.211 or 385.214) and the Regulations under the NGA (18 CFR 157.10). All protests filed with the Commission will be considered by it in determining the appropriate action to be taken but will not serve to make the protestants parties to the proceeding. Any person wishing to become a party to a proceeding or to participate as a party in any hearing therein must file a motion to intervene in accordance with the Commission's Rules.

A person obtaining intervenor status will be placed on the service list maintained by the Secretary of the Commission and will receive copies of all documents issued by the Commission, filed by the applicant, or filed by all other intervenors. An intervenor can file for rehearing of any Commission order and can petition for court review of any such order. However, an intervenor must serve copies of comments or any other filing it makes with the Commission to every other intervenor in the proceeding, as well as filing an original and 14 copies with the Commission.

A person does not have to intervene, however, in order to have comments considered; a person, instead, may submit two copies of such comments to the Secretary of the Commission. Commenters will be placed on the Commission's environmental mailing list, will receive copies of environmental documents, and will be able to participate in meetings associated with the Commission's environmental review process. Commenters will not receive copies of all documents filed by other parties or issued by the Commission and will not have the right to seek rehearing or appeal the Commission's final order to a Federal court.

The Commission will consider all comments and concerns equally, whether filed by Commenters or those requesting intervenor status.

Comments, protests, and interventions may be filed electronically via the Internet in lieu of paper copies. See 18 CFR 385.2001(a) (1)(iii) and the instructions on the Commission's web site under the ''e-filing'' link.

Take further notice that, pursuant to the authority contained in and subject to the jurisdiction conferred upon the Federal Energy Regulatory Commission by Sections 7 and 15 of the NGA and the Commission's Rules of Practice and Procedure, a hearing will be held without further notice before the Commission or its designee on this document if no motion to intervene is filed within the time required herein, if the Commission on its own review of the matter finds that a grant of the certificate is required by the public convenience and necessity. If a motion for leave to intervene is timely filed, or if the Commission on its own motion believes that a formal hearing is required, further notice of such hearing will be duly given.

Under the procedure herein provided for, unless otherwise advised, it will be unnecessary for CIG to appear or be represented at the hearing.

Linwood A. Watson, Jr.,

Deputy Secretary.

[FR Doc. 02–6696 Filed 3–19–02; 8:45 am]

BILLING CODE 6717–01–P

DEPARTMENT OF ENERGY

Federal Energy Regulatory Commission

[Docket No. RP02–197–000]

Eastern Shore Natural Gas Company; Notice of Proposed Changes in FERC Gas Tariff

March 14, 2002.

Take notice that on March 11, 2002, Eastern Shore Natural Gas Company (ESNG) tendered for filing as part of its FERC Gas Tariff, Second Revised Volume No. 1,Thirty-Sixth Revised Sheet No. 7 and Thirty-Sixth Revised Sheet No. 8, with a proposed effective date of April 1, 2002.

ESNG states that the purpose of this instant filing is to track rate changes attributable to storage services purchased from Transcontinental Gas Pipe Line Corporation (Transco) under its Rate Schedules GSS and LSS. The costs of the above referenced storage services comprise the rates and charges payable under ESNG's respective Rate Schedules GSS and LSS. This tracking filing is being made pursuant to Section 3 of ESNG's Rate Schedules GSS and LSS.

ESNG states that copies of the filing have been served upon its jurisdictional customers and interested State Commissions.

Any person desiring to be heard or to protest said filing should file a motion to intervene or a protest with the Federal Energy Regulatory Commission, 888 First Street, NE, Washington, DC 20426, in accordance with Sections 385.214 or 385.211 of the Commission's Rules and Regulations. All such motions or protests must be filed in accordance with Section 154.210 of the Commission's Regulations. Protests will be considered by the Commission in determining the appropriate action to be taken, but will not serve to make protestants parties to the proceedings. Any person wishing to become a party must file a motion to intervene. Copies of this filing are on file with the Commission and are available for public inspection. This filing may also be viewed on the web at *http://www.ferc.gov* using the ''RIMS'' link, select ''Docket#'' and follow the instructions (call 202–208–2222 for assistance). Comments, protests and interventions may be filed electronically via the Internet in lieu of paper. See, 18 CFR 385.2001(a)(1)(iii) and the instructions on the Commission's web site under the ''e-Filing'' link.

Linwood A. Watson, Jr.,

Deputy Secretary.

[FR Doc. 02–6705 Filed 3–19–02; 8:45 am]

BILLING CODE 6717–01–P

DEPARTMENT OF ENERGY

Federal Energy Regulatory Commission

[Docket No. RP96–320–052]

Gulf South Pipeline Company, LP; Notice of Negotiated Rate Filing

March 14, 2002.

Take notice that on March 8, 2002, Gulf South Pipeline Company, LP (Gulf South) tendered for filing contracts between Gulf South and the following companies for disclosure of recently negotiated rate transactions. As shown on the contracts, Gulf South requests an effective date of April 1, 2002.

Special Negotiated Rate Between—

Gulf South Pipeline Company, LP and The Utilities Board of the City of Bay Minette, Contract #14483

Gulf South Pipeline Company, LP and The City of Pascagoula, Contract #27272

Gulf South states that it has served copies of this filing upon all parties on the official service list created by the Secretary in this proceeding Any person desiring to be heard or to protest said filing should file a motion to intervene or a protest with the Federal Energy Regulatory Commission, 888 First Street, NE, Washington, DC 20426, in accordance with Sections 385.214 or 385.211 of the Commission's Rules and Regulations. All such motions or protests must be filed in accordance with Section 154.210 of the Commission's Regulations. Protests will be considered by the Commission in determining the appropriate action to be taken, but will not serve to make protestants parties to the proceedings. Any person wishing to become a party must file a motion to intervene. Copies of this filing are on file with the Commission and are available for public inspection. This filing may also be viewed on the web at *http://www.ferc.gov* using the ''RIMS'' link, select ''Docket#'' and follow the instructions (call 202–208–2222 for assistance). Comments, protests and interventions may be filed electronically via the Internet in lieu of paper. See, 18 CFR 385.2001(a)(1)(iii) and the instructions on the Commission's web site under the ''e-Filing'' link.

Linwood A. Watson, Jr.,

Deputy Secretary.

[FR Doc. 02–6701 Filed 3–19–02; 8:45 am]

BILLING CODE 6717–01–P

DEPARTMENT OF ENERGY

Federal Energy Regulatory Commission

[Docket No. RP02–151–001]

Gulf South Pipeline Company, LP; Notice of Compliance Filing

March 14, 2002.

Take notice that on March 7, 2002, Gulf South Pipeline Company, LP (Gulf South) tendered for filing as part of its FERC Gas Tariff, Sixth Revised Volume No. 1, the following tariff sheets, to become effective February 25, 2002:

Substitute Second Revised Sheet No. 306
Substitute Original Sheet No. 307

Gulf South states that the above tariff sheets have been filed to comply with the Order issued February 22, 2002, 98 FERC ¶ 61,186. In its original filing, Gulf South proposed provisions concerning the allocated market and regulatory risks between Gulf South and its No Notice Service (NNS) Customers. The Commission directed Gulf South to remove the 90-day prior notice written provision and to file revised tariff sheets reflecting a more reasonable notice period. The compliance filing incorporates this change.

Any person desiring to protest said filing should file a protest with the Federal Energy Regulatory Commission, 888 First Street, NE, Washington, DC 20426, in accordance with Section 385.211 of the Commission's Rules and Regulations. All such protests must be filed in accordance with Section 154.210 of the Commission's Regulations. Protests will be considered by the Commission in determining the appropriate action to be taken, but will not serve to make protestants parties to the proceedings. Copies of this filing are on file with the Commission and are available for public inspection. This filing may also be viewed on the web at *http://www.ferc.gov* using the ''RIMS'' link, select ''Docket#'' and follow the instructions (call 202–208–2222 for assistance). Comments, protests and interventions may be filed electronically via the Internet in lieu of paper. See, 18 CFR 385.2001(a)(1)(iii) and the instructions on the Commission's web site under the ''e-Filing'' link.

Linwood A. Watson, Jr.,

Deputy Secretary.

[FR Doc. 02–6703 Filed 3–19–02; 8:45 am]

BILLING CODE 6717–01–P

DEPARTMENT OF ENERGY

Federal Energy Regulatory Commission

[Docket No. EL02–66–000]

Minnesota Municipal Power Agency, Complainant, v. Southern Minnesota Municipal Power Agency, Respondent; Notice of Complaint

March 14, 2002.

Take notice that on March 11, 2002, the Minnesota Municipal Power Agency (the MMPA) filed a Complaint against the Southern Minnesota Municipal Power Agency (SMMPA), for improperly charging the MMPA for losses under SMMPA's Open Access Transmission Tariff.

Pursuant to requirements set forth in 18 CFR 385.206, MMPA has served a copy of the complaint and supporting documents upon SMMPA.

Any person desiring to be heard or to protest this filing should file a motion to intervene or protest with the Federal Energy Regulatory Commission, 888 First Street, NE., Washington, DC 20426, in accordance with Rules 211 and 214 of the Commission's Rules of Practice and Procedure (18 CFR 385.211 and 385.214). All such motions or protests must be filed on or before April 1, 2002. Protests will be considered by the Commission in determining the appropriate action to be taken, but will not serve to make protestants parties to the proceeding. Any person wishing to become a party must file a motion to intervene. Answers to the complaint shall also be due on or before April 1, 2002. Copies of this filing are on file with the Commission and are available for public inspection. This filing may also be viewed on the web at *http://www.ferc.gov* using the ''RIMS'' link, select ''Docket#'' and follow the instructions (call 202–208–2222 for assistance). Comments, protests, interventions and answers may be filed electronically via the Internet in lieu of paper. See, 18 CFR 385.2001(a)(1)(iii) and the instructions on the Commission's web site under the ''e-Filing'' link.

Linwood A. Watson, Jr.,

Deputy Secretary.

[FR Doc. 02–6697 Filed 3–19–02; 8:45 am]

BILLING CODE 6717–01–P

DEPARTMENT OF ENERGY

Federal Energy Regulatory Commission

[Docket No. RP85–60–014]

Overthrust Pipeline Company; Notice of Report of Refunds

March 14, 2002.

Take notice that on March 11, 2002, Overthrust Pipeline Company tendered for filing a refund report. Overthrust states that the report documents refunds of amounts pertaining to and detailing the Deferred Income Tax (DIT) refund payments for the year 2001.

Overthrust states that it is filing the refund report pursuant to a Commission order dated May 21, 1991, ''Order Approving Settlement with Modifications'' in Docket Nos. RP85–60–000 and –002. Overthrust explains that Article V of the settlement, as modified, requires Overthrust to file an annual report 60 days after making the actual DIT refunds.

Any person desiring to protest said filing should file a protest with the Federal Energy Regulatory Commission, 888 First Street, NE, Washington, DC 20426, in accordance with Section 385.211 of the Commission's Rules and Regulations. All such protests must be filed on or before March 21, 2002. Protests will be considered by the Commission in determining the appropriate action to be taken, but will

not serve to make protestants parties to the proceedings. Copies of this filing are on file with the Commission and are available for public inspection. This filing may also be viewed on the web at *http://www.ferc.gov* using the ''RIMS'' link, select ''Docket#'' and follow the instructions (call 202–208–2222 for assistance). Comments, protests and interventions may be filed electronically via the Internet in lieu of paper. See, 18 CFR 385.2001(a)(1)(iii) and the instructions on the Commission's web site under the ''e-Filing'' link.

Linwood A. Watson, Jr.,

Deputy Secretary.

[FR Doc. 02–6700 Filed 3–19–02; 8:45 am]

BILLING CODE 6717–01–P

DEPARTMENT OF ENERGY

Federal Energy Regulatory Commission

[Docket No. CP93–618–013]

PG&E Gas Transmission, Northwest Corporation; Notice of Annual Report

March 14, 2002.

Take notice that on January 28, 2002, PG&E Gas Transmission, Northwest Corporation (GTN) tendered for filing its ''Annual Report on Deferred Revenue Recovery Mechanism and Revenue Reconciliation for the Year Ending October 31, 2001'' for its Medford, Oregon Extension FTS–1 (E–2).

GTN asserts that the purpose of this filing is to comply with the Commission's Order of January 12, 1995 in Docket Nos. CP93–618, *et al.* That Order requires GTN to file an annual report concerning its deferred revenue recovery mechanism and detailing the cost of service for GTN's Medford Extension and the status of its deferred revenue recovery mechanism.

GTN further states that a copy of this filing has been served on GTN's jurisdictional customers and interested state regulatory agencies, as well as the Official Service list compiled by the Secretary in this proceeding.

Any person desiring to be heard or protest said filing should file a motion to intervene or protest with the Federal Energy Regulatory Commission, 888 First Street, NE., Washington, DC 20426, in accordance with sections 385.214 and 385.211 of the Commission's Rules of Practice and Procedure. All such motions or protests must be filed as provided in section 154.210 of the Commission's Regulations. Protests will be considered by the Commission in determining the appropriate action to be taken, but will not serve to make protestants parties to the proceeding. Any person wishing to become a party must file a motion to intervene. Copies of this filing are on file with the Commission and are available for publish inspection in the Public Reference Room.

Linwood A. Watson, Jr.,

Deputy Secretary.

[FR Doc. 02–6694 Filed 3–19–02; 8:45 am]

BILLING CODE 6717–01–P

DEPARTMENT OF ENERGY

Federal Energy Regulatory Commission

[Docket No. RP02–196–000]

Reliant Energy Gas Transmission Company; Notice of Proposed Changes in FERC Gas Tariff

March 14, 2002.

Take notice that on March 8, 2002, Reliant Energy Gas Transmission Company (REGT) tendered for filing as part of its FERC Gas Tariff, Fifth Revised Volume No. 1, the following revised tariff sheets to be effective May 1, 2002:

Ninth Revised Sheet No. 5
Ninth Revised Sheet No. 6
Tenth Revised Sheet No. 7
First Revised Sheet No. 15

REGT states that the purpose of this filing is to adjust REGT's fuel percentages and Electric Power Costs (EPC) Tracker pursuant to Sections 27 and 28 of its General Terms and Conditions.

Any person desiring to be heard or to protest said filing should file a motion to intervene or a protest with the Federal Energy Regulatory Commission, 888 First Street, NE., Washington, DC 20426, in accordance with Sections 385.214 or 385.211 of the Commission's Rules and Regulations. All such motions or protests must be filed in accordance with Section 154.210 of the Commission's Regulations. Protests will be considered by the Commission in determining the appropriate action to be taken, but will not serve to make protestants parties to the proceedings. Any person wishing to become a party must file a motion to intervene. Copies of this filing are on file with the Commission and are available for public inspection. This filing may also be viewed on the web at *http://www.ferc.gov* using the ''RIMS'' link, select ''Docket#'' and follow the instructions (call 202–208–2222 for assistance). Comments, protests and interventions may be filed electronically via the Internet in lieu of paper. See, 18 CFR 385.2001(a)(1)(iii) and the instructions on the Commission's web site under the ''e-Filing'' link.

Linwood A. Watson, Jr.,

Deputy Secretary.

[FR Doc. 02–6704 Filed 3–19–02; 8:45 am]

BILLING CODE 6717–01–P

DEPARTMENT OF ENERGY

Federal Energy Regulatory Commission

[Docket No. RP02–129–002]

Southern LNG Inc.; Notice of Compliance Filing

March 14, 2002.

Take notice that on March 1, 2002, Southern LNG Inc., (Southern) hereby supplements its December 21, 2001 limited Section 4 filing pursuant to the Commission's January 31, 2002 order.[1]

Southern states that the supplements consists of additional information in support of increased costs to recommission and modify the Elba Island liquefied natural gas terminal in Docket Nos. CP99–580.

Southern states that copies of the filing has been served to all customers and interested state commissions.

Any person desiring to protest said filing should file a protest with the Federal Energy Regulatory Commission, 888 First Street, NE, Washington, DC 20426, in accordance with Section 385.211 of the Commission's Rules and Regulations. All such protests must be filed on or before March 21, 2002. Protests will be considered by the Commission in determining the appropriate action to be taken, but will not serve to make protestants parties to the proceedings. Copies of this filing are on file with the Commission and are available for public inspection. This filing may also be viewed on the web at *http://www.ferc.gov* using the ''RIMS'' link, select ''Docket#'' and follow the instructions (call 202–208–2222 for assistance). Comments, protests and interventions may be filed electronically via the Internet in lieu of paper. See, 18 CFR 385.2001(a)(1)(iii) and the instructions on the Commission's web site under the ''e-Filing'' link.

Linwood A. Watson, Jr.,

Deputy Secretary.

[FR Doc. 02–6702 Filed 3–19–02; 8:45 am]

BILLING CODE 6717–01–P

[1] Southern LNG Inc., 98 FERC ¶ 61,088 (2002).

DEPARTMENT OF ENERGY

Federal Energy Regulatory Commission

[Docket No. P–2114–106]

Yakama Nation, Complainant, v. Public Utility District No. 2 of Grant County, Washington, Respondent; Notice of Complaint

March 14, 2002.

Take notice on March 8, 2002, the Yakama Nation (Complainant) filed with the Federal Energy Regulatory Commission (Commission) a document entitled ''Complaint of the Yakama Nation and Request for Fast-Track Processing.'' The Complainant requests, pursuant to 18 CFR 385.206 of the Commission's regulations, that the Commission find Public Utility District No. 2 of Grant County, Washington to be in violation of its license for the Priest Rapids Hydroelectric Project (Project), FERC Project No. 2114, Federal law authorizing the development of the Project, as well as Sections 10, 19, and 20 Federal Power Act due to discriminatory and anticompetitive provisions contained in wholesale power contracts required under the Project license. The Complainant requests that the Commission require the Licensee to correct these violations and to provide remedies designed to alleviate some of the harms that the violations have inflicted on the Yakama Nation.

Any person desiring to be heard or to protest this filing should file a motion to intervene or protest with the Federal Energy Regulatory Commission, 888 First Street, NE., Washington, DC 20426, in accordance with Rules 211 and 214 of the Commission's Rules of Practice and Procedure (18 CFR 385.211 and 385.214). All such motions or protests must be filed on or before March 28, 2002. Protests will be considered by the Commission in determining the appropriate action to be taken, but will not serve to make protestants parties to the proceeding. Any person wishing to become a party must file a motion to intervene. Answers to the complaint shall also be due on or before March 28, 2002. Copies of this filing are on file with the Commission and are available for public inspection. This filing may also be viewed on the web at *http://www.ferc.gov* using the ''RIMS'' link, select ''Docket#'' and follow the instructions (call 202–208–2222 for assistance). Comments, protests, interventions and answers may be filed electronically via the Internet in lieu of paper. See, 18 CFR 385.2001(a)(1)(iii) and the instructions on the Commission's web site under the ''e-Filing'' link.

Linwood A. Watson, Jr.,

Deputy Secretary.

[FR Doc. 02–6698 Filed 3–19–02; 8:45 am]

BILLING CODE 6717–01–P

DEPARTMENT OF ENERGY

Federal Energy Regulatory Commission

[Docket No. EC02–55–000, et al.]

Trans-Elect, Inc., et al.; Electric Rate and Corporate Regulation Filings

March 13, 2002.

Take notice that the following filings have been made with the Commission. Any comments should be submitted in accordance with Standard Paragraph E at the end of this notice.

1. Trans-Elect, Inc., Michigan Transco Holdings, Limited Partnership, Michigan Electric Transmission Company LLC

[Docket No. EC02–55–000]

Take notice that on March 8, 2002, Trans-Elect, Inc. (Trans-Elect) and Michigan Transco Holdings, Limited Partnership (Michigan Transco Holdings LP), on behalf of Michigan Electric Transmission Company (Michigan Transco LLC) (collectively, Trans-Elect Applicants) submitted an application for approval of the transfer of operational control over the jurisdictional transmission facilities to be acquired by Michigan Transco LLC to the Midwest Independent Transmission System Operator, Inc. (Midwest ISO), and for transfer of certain related transmission service agreements to the Midwest ISO.

Copies of this filing were served on all affected state utility commissions.

Comment Date: March 29, 2002.

2. Alliance Companies, et al. and National Grid USA

[Docket No. EL02–65–000]

Take notice that on March 6, 2002, pursuant to Rule 207 of the Federal Energy Regulatory Commission's (Commission) Rules of Practice and Procedure, 18 CFR 385.207, Ameren Services Company (on behalf of Union Electric Company and Central Illinois Public Service Company), American Electric Power Service Corporation (on behalf of Appalachian Power Company, Columbus Southern Power Company, Indiana Michigan Power Company, Kentucky Power Company, Kingsport Power Company, Ohio Power Company, and Wheeling Power Company), The Dayton Power and Light Company, Exelon Corporation (on behalf of Commonwealth Edison Company and Commonwealth Edison Company of Indiana, Inc.), FirstEnergy Corp. (on behalf of American Transmission Systems, Inc., The Cleveland Electric Illuminating Company, Ohio Edison Company, Pennsylvania Power Company, and The Toledo Edison Company), Illinois Power Company, and Northern Indiana Public Service Company (collectively, the Alliance Companies), and National Grid USA, tendered for filing a petition for the Commission to issue an order finding that the proposed policy resolutions contained in the petition provide an appropriate basis for the participation of Alliance GridCo in the Midwest Regional Transmission Organization (RTO).

Alliance GridCo is the Alliance Transmission Company LLC that will be formed with National Grid USA as managing member, provided the Alliance business model can be successfully accommodated within an RTO. Through this petition, the Alliance Companies and National Grid USA attempt to find a way to accommodate Alliance GridCo as a viable transmission business underneath the Midwest ISO umbrella. Should the Commission believe its policy goals would best be served by having Alliance GridCo operate underneath the Midwest ISO umbrella, and the Commission grants the petition, the Alliance Companies and National Grid USA anticipate that Alliance GridCo would be operational by October 1, 2002.

Comment Date: March 28, 2002.

3. Pacific Gas and Electric Company

[Docket No. ER01–833–000]

Take notice that on March 6, 2002 Pacific Gas and Electric Company filed an amendment to its February 28, 2002 filing for Further Request for Deferral of Consideration of the unexecuted Wholesale Distribution Tariff (WDT) Service Agreement and Interconnection Agreement between Pacific Gas and Electric Company and Modesto Irrigation District (MID).

PG&E requests that the Commission defer consideration of the proceedings filed in ER01–833–000 to August 26, 2002, 180 days beyond the last request for Deferral in order that the parties may finalize and executed the Agreements.

Copies of this filing have been served upon MID, the California Independent System Operator Corporation, and the California Public Utilities Commission.

Comment Date: March 27, 2002.

4. Southern California Edison Company

[Docket No. ER02–1286–000]

Take notice that on March 8, 2002, Southern California Edison Company (SCE) tendered for filing a Service Agreement For Wholesale Distribution Service under SCE's Wholesale Distribution Access Tariff, an Interconnection Facilities Agreement, and a Reliability Management System Agreement (Agreements) between SCE and Ridgewood Olinda, LLC (Ridgewood).

SCE respectfully requests the Agreements become effective on March 11, 2002.

These Agreements specify the terms and conditions under which SCE will interconnect Ridgewood's generating facility to its electrical system and provide Distribution Service for up to 2.4 MW of power produced by the generating facility. Copies of this filing were served upon the Public Utilities Commission of the State of California and Ridgewood.

Comment Date: March 29, 2002.

5. Rainy River Energy Corporation-Taconite Harbor

[Docket No. ER02–1258–000]

Take notice that on March 5, 2002, Rainy River Energy Corporation-Taconite Harbor (RR-TH) file with the Federal Energy Regulatory Commission (Commission) a Power Sales Agreement for short term power sales.

Comment Date: March 26, 2002.

6. Generation Power, Inc.

[Docket No. ER02–894–001]

Take notice that on March 7, 2002, Generation Power, Inc. amended its filing of January 30, 2002, which petitioned the Federal Energy Regulatory Commission (Commission) Commission for acceptance of Generation Power Rate Schedule FERC No. 1; the granting of certain blanket approvals, including the authority to sell electricity at market-based rates; and the waiver of certain Commission regulations.

Generation Power intends to engage in wholesale electric power and energy purchases and sales as a marketer. Generation Power is not in the business of generating or transmitting electric power. Generation Power does not have any affiliates as defined at 18 CFR 161.2.

Comment Date: March 28, 2002.

7. American Transmission Company LLC

[Docket No. ER01–1107–002]

Take notice that on March 7, 2002, American Transmission Company LLC (ATCLLC) tendered for filing a refund report in accordance with the Federal Energy Regulatory Commission's January 30, 2002 letter order in the above-referenced proceeding.

Copies of the refund report have been served on parties to the service list, the Public Service Commission of Wisconsin, the Illinois Commerce Commission, and the Michigan Public Service Commission.

Comment Date: March 28, 2002.

8. Conectiv Energy Supply, Inc.

[Docket No. ER00–1770–004]

Take notice that on March 11, 2002, Conectiv Energy Supply, Inc. (CESI) tendered for filing its triennial market power analysis in support of its market-based rate authority in compliance with the Commission's April 25, 2000, order accepting CESI's updated market-based tariff and Code of Conduct. Conectiv Energy Supply, Inc., 91 FERC ¶ 61,076 (2000). In that proceeding, CESI committed to update its market power analysis within three years of March 10, 1999.

Comment Date: April 1, 2002.

9. UGI Development Company

[Docket No. ER99–2817–001]

Take notice that on March 11, 2002, UGI Development Company (UGID) tendered for filing its triennial market power update.

Comment Date: April 1, 2002.

10. Commonwealth Edison Company

[Docket No. ER02–1283–000]

Take notice that on March 8, 2002, Commonwealth Edison Company (ComEd) submitted for filing two Form of Service Agreements for Firm Point-To-Point Transmission Service and the corresponding Network Upgrade Agreements between ComEd and Madison Gas and Electric Company (Madison) and one Form of Service Agreement for Firm Point-To-Point Transmission Service and the corresponding Network Upgrade Agreement between ComEd and MPEX (collectively, Service Agreements) under the terms of ComEd's Open Access Transmission Tariff (OATT).

ComEd requests an effective date of March 5, 2002, and accordingly seeks waiver of the Commission's notice requirements. A copy of this filing was served on Madison and MPEX.

Comment Date: March 29, 2002.

11. Xcel Energy Services, Inc.

[Docket No. ER02–1284–000]

Take notice that on March 11, 2002, Xcel Energy Services, Inc. (XES), on behalf of Northern States Power Company and Northern States Power Company (Wisconsin) (collectively, NSP) submitted for filing a Form of Service Agreement with South Plains Electric Cooperative, Inc. (South Plains), which is in accordance with NSP's Rate Schedule for Market-Based Power Sales (NSP Companies FERC Electric Tariff, Original Volume No. 6). XES requests that this agreement become effective on March 1, 2002.

Comment Date: April 1, 2002.

12. Cinergy Services, Inc.

[Docket No. ER02–1285–000]

Take notice that on March 8, 2002, that Cinergy Services, Inc. (Cinergy) tendered for filing a proposed Notice of Cancellation with Narrative Statement and revisions to Cinergy's Open Access Transmission Tariff (Cinergy OATT), FERC Electric Tariff, Second Revised Volume No. 5.

Cinergy states that its proposed revisions are intended to cancel the Forms of Service Agreement for Firm Point-to-Point Transmission Service, Non-Firm Point-to-Point Transmission Service and Network Transmission Service, as well as certain transmission-related services with respect thereto, which are no longer necessary due to the start-up of Midwest Independent Transmission System Operator, Inc. and its Open Access Transmission Tariff on February 1, 2002.

Cinergy states that it has served copies of its filing by placing a copy of same in the United States mail, first-class postage prepaid, addressed to all customers under the Cinergy OATT.

Comment Date: March 29, 2002.

13. Entergy Services, Inc.

[Docket No. ER02–1287–000]

Take notice that on March 8, 2002, Entergy Services, Inc. (Entergy Services) submitted for filing on behalf of Entergy Arkansas, Inc. (EAI) a 2002 Wholesale Formula Rate Update (Update) in accordance with: (1) The Power Coordination, Interchange and Transmission Service Agreements (PCITA) between EAI and the Cities of Conway, West Memphis and Osceola Arkansas (Arkansas Cities); the cities of Campbell and Thayer, Missouri (Missouri Cities); and the Arkansas Electric Cooperative Corporation (AECC); (2) the Hydroelectric Power Transmission and Distribution Service Agreement between EAI and the City of North Little Rock, Arkansas (North Little Rock); (3) the Transmission Service Agreement (TSA) between EAI and the City of Hope, Arkansas (Hope); (4) the TSA between EAI and the Louisiana Energy & Power Authority (LEPA); (5) the Wholesale Power Service

Agreement (WPSA) between EAI and the City of Prescott, Arkansas (Prescott); and (6) the WPSA between EAI and the Farmers Electric Cooperative Corporation (Farmers). Entergy Services states that the Update redetermines the formula rate charges and the Transmission Loss Factor in accordance with: (1) the above agreements; (2) the 1994 Joint Stipulation between EAI and AECC accepted by the Commission in Docket No. ER95–49–000, as revised by the 24th Amendment to the AECC PCITA on March 26, 1996 in Docket No. ER96–1116; (3) the formula rate revisions accepted by the Commission on February 21, 1995 in Docket No. ER95–393–000, as applicable to the Arkansas Cities, the Missouri Cities, Hope and North Little Rock; (4) the formula rate revisions applicable to LEPA accepted by the Commission on January 10, 1997 in Docket No. ER97–257–000; and (5) the Settlement Agreement accepted by the Commission on July 2, 1999 in Docket No. ER98–2028–000 (the 1998 Formula Rate Update proceeding).

Comment Date: March 29, 2002.

14. PPL Electric Utilities Corporation

[Docket No. ER02–1288–000]

Take notice that on March 8, 2002, PPL Electric Utilities Corporation (PPL Electric Utilities) tendered for filing an Interconnection Agreement between PPL Electric Utilities and the Mt. Carmel Cogen, Inc.

Comment Date: March 29, 2002.

15. Midwest Independent Transmission System Operator, Inc., Trans-Elect, Inc., Michigan Transco Holdings, Limited Partnership and Michigan Electric Transmission Company LLC

[Docket No. ER02–1289–000]

Take notice that on March 8, 2002, the Midwest Independent Transmission System Operator, Inc. (Midwest ISO), and Trans-Elect, Inc. and Michigan Transco Holdings, Limited Partnership, on behalf of Michigan Electric Transmission Company LLC (Michigan Transco LLC) (collectively, Trans-Elect Applicants), filed pursuant to section 205 of the Federal Power Act for Commission approval or acceptance of certain changes to the Midwest ISO's open access transmission tariff (Midwest ISO Tariff) to recognize Michigan Transco LLC's participation as a transmission owner in the Midwest ISO and to establish rates for the Michigan Transco LLC pricing zone. The Midwest ISO and Trans-Elect Applicants also filed a supplemental agreement to establish certain conditions for Michigan Transco LLC's participation in the Midwest ISO.

Copies of this filing were served on all affected state utility commissions and transmission customers, as well as on all members of the Midwest ISO.

Comment Date: March 29, 2002.

16. Central Power and Light Company

[Docket No. ER02–1290–000]

Take notice that on March 8, 2002, Central Power and Light Company (CPL) submitted for filing First Revised Rate Schedule No. 70 with the City of Robstown, Texas (Robstown).

CPL seeks an effective date of April 1, 2002 and, accordingly, seeks waiver of the Commission's notice requirements. CPL states that a copy of this filing has been served on Robstown and the Public Utilities Commission of Texas.

Comment Date: March 29, 2002.

17. Entergy Services, Inc.

[Docket No. ER02–1293-000]

Take notice that on March 8, 2002, Entergy Services, Inc., on behalf of Entergy Arkansas, Inc., Entergy Gulf States, Inc., Entergy Louisiana, Inc., Entergy Mississippi, Inc., and Entergy New Orleans, Inc., (collectively, the Entergy Operating Companies) tendered for filing a Non-Firm Point-To-Point Transmission Service Agreement and a Short-Term Firm Point-To-Point Transmission Service Agreement both between Entergy Services, Inc., as agent for the Entergy Operating Companies, and NRG Power Marketing Inc.

Comment Date: March 29, 2002.

18. Ameren Energy, Inc. on Behalf of Union Electric Company d/b/a AmerenUE and Ameren Energy Generating Company

[Docket No. ER02–1294–000]

Take notice that on March 8, 2002, Ameren Energy, Inc. (Ameren Energy), on behalf of Union Electric Company d/b/a AmerenUE and Ameren Energy Generating Company (collectively, the Ameren Parties), pursuant to section 205 of the Federal Power Act, 16 USC 824d, and the market rate authority granted to the Ameren Parties, submitted for filing umbrella power sales service agreements under the Ameren Parties' market rate authorizations entered into with Williams Energy Marketing & Trading Company.

Ameren Energy seeks Commission acceptance of these service agreements effective February 22, 2002. Copies of this filing were served on the public utilities commissions of Illinois and Missouri and the counterparty.

Comment Date: March 29, 2002.

19. Progress Energy Inc. on Behalf of Progress Ventures, Inc.

[Docket No. ER02–1295–000]

Take notice that on March 8, 2002, Progress Ventures, Inc. (Progress Ventures) tendered for filing an executed Service Agreement between Progress Ventures and the following eligible buyer, Aquila Energy Marketing Corporation. Service to this eligible buyer will be in accordance with the terms and conditions of Progress Ventures Market-Based Rates Tariff, FERC Electric Tariff No. 1.

Progress Ventures requests an effective date of March 6, 2002 for this Service Agreement. Copies of the filing were served upon the North Carolina Utilities Commission, the South Carolina Public Service Commission, the Florida Public Service Commission and the Georgia Public Service Commission.

Comment Date: March 29, 2002.

20. Puget Sound Energy, Inc.

[Docket No. ER02–1296–000]

Take notice that on March 8, 2002, Puget Sound Energy, Inc. (PSE), tendered for filing a Port Townsend Area Transmission Agreement by Public Utility District No. 1 of Clallam County (Clallam), Port Townsend Paper Corporation (Port Townsend Paper), and PSE. A copy of the filing was served upon Clallam and Port Townsend Paper.

Comment Date: March 29, 2002.

Standard Paragraph

E. Any person desiring to be heard or to protest such filing should file a motion to intervene or protest with the Federal Energy Regulatory Commission, 888 First Street, NE., Washington, DC 20426, in accordance with Rules 211 and 214 of the Commission's Rules of Practice and Procedure (18 CFR 385.211 and 385.214). All such motions or protests should be filed on or before the comment date. Protests will be considered by the Commission in determining the appropriate action to be taken, but will not serve to make protestants parties to the proceeding. Any person wishing to become a party must file a motion to intervene. Copies of this filing are on file with the Commission and are available for public inspection. This filing may also be viewed on the web at *http://www.ferc.gov* using the ''RIMS'' link, select ''Docket#'' and follow the instructions (call 202–208–2222 for assistance). Comments, protests and interventions may be filed electronically via the Internet in lieu of paper. See, 18 CFR 385.2001(a)(1)(iii) and the

instructions on the Commission's web site under the ''e-Filing'' link.

Magalie R. Salas,

Secretary.

[FR Doc. 02–6653 Filed 3–19–02; 8:45 am]

BILLING CODE 6717–01–P

DEPARTMENT OF ENERGY

Federal Energy Regulatory Commission

[Docket No. CP01–439–000]

Columbia Gas Transmission Corporation; Notice of Availability of the Environmental Assessment for the Proposed Delaware Valley Energy Expansion Project

March 14, 2002.

The staff of the Federal Energy Regulatory Commission (FERC or Commission) has prepared an environmental assessment (EA) on the natural gas pipeline facilities proposed by Columbia Gas Transmission Corporation (Columbia) in the above referenced docket.

The EA was prepared to satisfy the requirements of the National Environmental Policy Act. The staff concludes that approval of the proposed project, with appropriate mitigating measures, would not constitute a major Federal action significantly affecting the quality of the human environment.

The EA assesses the environmental effects of the construction and operation of the proposed facilities in Chester and Delaware Counties, Pennsylvania and Gloucester, County, New Jersey. These facilities would consist of the abandonment of 8.84 miles of 10-inch-diameter pipeline and 0.30 mile of 14-inch-diameter pipeline and replacement with 24-inch-diameter pipeline in Chester County, Pennsylvania. Columbia would construct 5.10 miles of 20-inch-diameter loop in Delaware County, and 9.62 miles of 20-inch-diameter pipeline and a meter station in Gloucester County, New Jersey. Columbia would also install a 6,000 horsepower compressor at both its existing Eagle and Downingtown Compressor Stations in Chester County, Pennsylvania.

The facilities would supply 165,000 dekatherms per day of gas to the Mantua Creek Power Plant presently under construction in Gloucester County, New Jersey.

The EA has been placed in the public files of the FERC. A limited number of copies of the EA are available for distribution and public inspection at:

Federal Energy Regulatory Commission, Public Reference and Files Maintenance Branch 888 First Street, NE., Room 2A, Washington, DC 20426, (202) 208–1371.

Copies of the EA have been mailed to Federal, state and local agencies, public interest groups, interested individuals, newspapers, and parties to this proceeding.

Any person wishing to comment on the EA may do so. To ensure consideration prior to a Commission decision on the proposal, it is important that we receive your comments before the date specified below. Please carefully follow these instructions to ensure that your comments are received in time and properly recorded:

1. Send two copies of your comments to: Magalie R. Salas, Secretary, Federal Energy Regulatory Commission, 888 First St., N.E., Room 1A, Washington, DC 20426;

2. Label one copy of the comments for the attention of the Gas 1, PJ–11.1;

3. Reference Docket No. CP01–439–000; and

4 Mail your comments so that they will be received in Washington, DC on or before April 12, 2002.

Comments may also be filed electronically via the Internet in lieu of paper. See 18 CFR 385.2001(a)(1)(iii) and the instructions on the Commission's website at *http://www.ferc.fed.us/efi/doorbell.htm* under the link to the User's Guide. Before you can file comments you will need to create an account which can be created by clicking on ''Login to File'' and then ''New User Account''.

Comments will be considered by the Commission but will not serve to make the commentor a party to the proceeding. Any person seeking to become a party to the proceeding must file a motion to intervene pursuant to Rule 214 of the Commission's Rules of Practice and Procedures (18 CFR 385.214).[1] Only intervenors have the right to seek rehearing of the Commission's decision.

Affected landowners and parties with environmental concerns may be granted intervenor status upon showing good cause by stating that they have a clear and direct interest in this proceeding which would not be adequately represented by any other parties. You do not need intervenor status to have your comments considered.

Additional information about the proposed project is available from the Commission's Office of External Affairs at (202) 208–0004 or on the FERC website (www.ferc.fed.us) using the ''RIMS'' link to information in this docket number. Click on the ''RIMS'' link, select ''Docket #'' from the RIMS Menu, and follow the instructions. For assistance with access to RIMS, the RIMS helpline can be reached at (202) 208–2222.

Similarly, the ''CIPS'' link on the FERC Internet website provides access to the texts of formal documents issued by the Commission, such as orders, notices, and rulemakings. From the FERC Internet website, click on the ''CIPS'' link, select

''Docket #'' from the CIPS menu, and follow the instructions. For assistance with access to CIPS, the CIPS helpline can be reached at (202) 208–2474.

Linwood A. Watson, Jr.,

Deputy Secretary.

[FR Doc. 02–6695 Filed 3–19–02; 8:45 am]

BILLING CODE 6717–01–P

[1] Interventions may also be filed electronically via the Internet in lieu of paper. See the previous discussion on filing comments electronically.

DEPARTMENT OF ENERGY

Federal Energy Regulatory Commission

Notice of Application Ready for Environmental Analysis, Soliciting Comments, Recommendations, Terms and Conditions, and Prescriptions

March 14, 2002.

Take notice that the following hydroelectric application has been filed with the Commission and is available for public inspection.

a. *Type of Application:* Amended application for new license.

b. *Project No.:* 1354–005.

c. *Date filed:* July 28, 2001.

d. *Applicant:* Pacific Gas and Electric Company.

e. *Name of Project:* Crane Valley.

f. *Location:* On Willow Creek, North Fork Willow Creek, South Fork Willow Creek, Chilkoot Creek, and Chiquito Creek within the San Joaquin River Basin. The project is in Madera and Fresno counties near the town of Oakhurst, California.

The project includes 738.11 acres of federal lands within the Sierra National Forest.

g. *Filed Pursuant to:* Federal Power Act, 16 U.S.C. 791 (a)–825(r).

h. *Applicant Contact:* Mr. James Holeman (415) 973–6891 or Mr. Nicholas Markevich, 245 Market Street, P.O. Box 770000, San Francisco, CA 94177, (415) 973–5358.

i. *FERC Contact:* Jim Fargo at (202) 219–2848; e-mail *james.fargo@ferc.fed.us*

j. *Deadline for filing comments, recommendations, terms and conditions, and prescriptions:* 60 days from the issuance date of this notice.

All documents (original and eight copies) should be filed with: Magalie R. Salas Secretary, Federal Energy Regulatory Commission, 888 First Street, NE, Washington, DC 20426.

The Commission's Rules of Practice require all intervenors filing documents with the Commission to serve a copy of that document on each person on the official service list for the project. Further, if an intervenor files comments or documents with the Commission relating to the merits of an issue that may affect the responsibilities of a particular resource agency, they must also serve a copy of the document on that resource agency.

Comments, recommendations, terms and conditions, and prescriptions may be filed electronically via the Internet in lieu of paper. See 18 CFR 385.2001(a)(1)(iii) and the instructions on the Commission's web site *(http://www.ferc.gov)* under the ''e-Filing'' link.

k. Status of environmental analysis: This application has been accepted for filing and is now ready for environmental analysis. At this time we do not anticipate the need for preparing a draft EA. We intend to prepare a supplement to the environmental document issued in 1992. The supplemental EA will include our recommendations for operating procedures and environmental enhancement measures that should be part of any new license issued by the Commission. Recipients will have 45 days to provide the Commission with any comments on that document. All comments on the EA, filed with the Commission, will be considered in the licensing decision. However, should substantive comments requiring re-analysis be received on the NEPA document, we would consider preparing a subsequent NEPA document before the licensing decision.

1. The Crane Valley—with 26.7 megawatts (MW) of normal operating capacity—has storage, diversion, water conveyance, and power production facilities.

- The Crane Valley reservoir (Bass Lake) with a maximum storage capacity of 45,410 acre-feet (ac-ft) and Chilkoot reservoir, upstream of Crane Valley, with a maximum capacity of 310 ac-ft
- A small diversion on a tributary to the West Fork Chiquito Creek that brings water to Chilkoot reservoir
- A conveyance system—including three diversion dams, three forebays, one afterbay, and about 14 miles of canals, tunnels and flumes—linking these five powerhouses:

—Crane Valley, with 0.9 MW of normal operating capacity
—San Joaquin No. 3, with 3.4 MW of normal operating capacity
—San Joaquin No. 2, with 3.2 MW of normal operating capacity
—San Joaquin No. 1A, with 0.4 MW of normal operating capacity
—Wishon, with 18.8 MW of normal operating capacity

Historically, the Project produces 123.3 gigawatthours (GWh) of electrical energy annually and has a dependable capacity of 8.4 MW.

m. Locations of the Application: Copies of the application are available for inspection or reproduction at the Commission's Public Reference and Files Maintenance Branch, located at 888 First Street, NE, Washington, D.C. 20426, or by calling (202) 208–2326. The applications may also be viewed on the web at *http://www.ferc.gov* using the ''RIMS'' link-select ''Docket #'' and follow the instructions (call 202–208–2222 for assistance). A copy is also available for inspection and reproduction at the address in item h above.

n. The Commission directs, pursuant to Section 4.34(b) of the Regulations (see Order No. 533 issued May 8, 1991, 56 FR 23108, May 20, 1991) that all comments, recommendations, terms and conditions and prescriptions concerning the application be filed with the Commission within 60 days from the issuance date of this notice. All reply comments must be filed with the Commission within 105 days from the date of this notice.

Anyone may obtain an extension of time for these deadlines from the Commission only upon a showing of good cause or extraordinary circumstances in accordance with 18 CFR 385.2008.

All filings must (1) bear in all capital letters the title ''COMMENTS'', ''REPLY COMMENTS'', ''RECOMMENDATIONS,'' ''TERMS AND CONDITIONS,'' or ''PRESCRIPTIONS;'' (2) set forth in the heading the name of the applicant and the project number of the application to which the filing responds; (3) furnish the name, address, and telephone number of the person submitting the filing; and (4) otherwise comply with the requirements of 18 CFR 385.2001 through 385.2005. All comments, recommendations, terms and conditions or prescriptions must set forth their evidentiary basis and otherwise comply with the requirements of 18 CFR 4.34(b). Agencies may obtain copies of the application directly from the applicant. Each filing must be accompanied by proof of service on all persons listed on the service list prepared by the Commission in this proceeding, in accordance with 18 CFR 4.34(b), and 385.2010.

Linwood A. Watson, Jr.,
Deputy Secretary.

[FR Doc. 02–6699 Filed 3–19–02; 8:45 am]

BILLING CODE 6717–01–P

ENVIRONMENTAL PROTECTION AGENCY

[FRL–7160–6]

Agency Information Collection Activities: Proposed Collection; Comment Request; Hazardous Remediation Waste Management Requirements (HWIR-Media)

AGENCY: Environmental Protection Agency (EPA).

ACTION: Notice.

SUMMARY: In compliance with the Paperwork Reduction Act (44 U.S.C. 3501 *et seq.*), this document announces that EPA is planning to submit the following continuing Information Collection Request (ICR) to the Office of Management and Budget (OMB): ''Hazardous Remediation Waste Management Requirements (HWIR-Media),'' EPA ICR Number 1775.03; OMB Control Number 2050–0161; Expiration Date 06/30/2002. Before submitting the ICR to OMB for review and approval, EPA is soliciting comments on specific aspects of the proposed information collection as described below.

DATES: Comments must be submitted on or before May 20, 2002.

ADDRESSES: Commenters must send an original and two copies of their comments referencing Docket Number F–2002–MH2P–FFFFF to RCRA Docket Information Center, Office of Solid Waste (5305W) United States Environmental Protection Agency, Ariel Rios Building, 1200 Pennsylvania Avenue, NW, Washington, DC, 20460. Hand deliveries of comments should be made to the Arlington, VA address listed below. Comments may also be submitted electronically by sending electronic mail through the Internet to: *rcra-docket@epamail.gov*. Comments in electronic format should also be identified by the Docket Number F–2002–MH2P–FFFFF. All electronic comments must be submitted as an ASCII file avoiding the use of special characters and any form of encryption.

The official record for this action will be kept in paper form. Accordingly, EPA will transfer all comments received electronically into paper form and place them in the official record, which will also include all comments submitted directly in writing. The official record is the paper record maintained in the RCRA Information Center (the RIC address is listed above in this section).

Commenters should not submit any confidential business information (CBI) electronically. An original and two copies of CBI must be submitted under separate cover to: RCRA CBI Document Control Officer, Office of Solid Waste (5303W), United States Environmental Protection Agency, Ariel Rios Building, 1200 Pennsylvania Avenue, NW, Mailcode 5303W, Washington, DC, 20460.

Public comments and supporting materials are available for viewing in the RCRA Information Center (RIC), located at Crystal Gateway, First Floor, 1235 Jefferson Davis Highway, Arlington, Virginia. The RIC is open from 9 a.m. to 4 p.m. Monday through Friday, excluding federal holidays. To review docket materials, it is recommended that the public make an appointment by calling (703) 603–9230. The public may copy a maximum of 100 pages from any regulatory docket at no charge. Additional copies are $0.15/page.

This notice and the supporting documents that detail the Reporting and Record keeping Requirements for the Hazardous Remediation Waste Management Requirements (HWIR-Media) Final Rule ICR are also available.

FOR FURTHER INFORMATION CONTACT: For general information, contact the RCRA Hotline at 800 424–9346 or TDD 800 553–7672 (hearing impaired). In the Washington, DC, metropolitan area, call 703 412–9810 or TDD 703 412–3323.

For more detailed information on specific aspects of this rulemaking contact Mike Fitzpatrick by phone at (703) 308–8411, by facsimile at (703) 308–8609, by mail at the Office of Solid Waste (5303W), United States Environmental Protection Agency, Ariel Rios Building, 1200 Pennsylvania Avenue, NW, Mailcode 5303W, Washington, DC, 20460 or e-mail at *fitzpatrick.mike@epa.gov*.

SUPPLEMENTARY INFORMATION:

Affected entities: Entities potentially affected by this action are those owners or operators of facilities that wish to voluntarily clean up contamination of their site.

Title: ''Hazardous Remediation Waste Management Requirements (HWIR-Media)'' OMB Control No. 2050–0161; EPA ICR No. 1775.03 expiring 06/30/02.

Abstract: All information collection activities required by this rule are authorized by sections 3004 and 3005 of the Solid Waste Disposal Act of 1970, as amended by the Resource Conservation and Recovery Act of 1976 (RCRA), as amended by the Hazardous and Solid Waste Amendments of 1984 (SHWA), 42 U.S.C. 6912(a), 6921, 6924, 6925, 6926, and 6927. EPA believes the information collection for this rule is necessary to balance streamlined regulations of remediation wastes with the Agency's responsibility to protect human health and the environment. The respondents are primarily owners or operators of facilities that wish to voluntarily clean up contamination of their site.

An agency may not conduct or sponsor, and a person is not required to respond to, a collection of information unless it displays a currently valid OMB control number. The OMB control numbers for EPA's regulations are listed in 40 CFR part 9 and 48 CFR Chapter 15.

The EPA would like to solicit comments to:

(i) Evaluate whether the proposed collection of information is necessary for the proper performance of the functions of the agency, including whether the information will have practical utility;

(ii) Evaluate the accuracy of the agency's estimate of the burden of the proposed collection of information, including the validity of the methodology and assumptions used;

(iii) Enhance the quality, utility, and clarity of the information to be collected; and

(iv) Minimize the burden of the collection of information on those who are to respond, including through the use of appropriate automated electronic, mechanical, or other technological collection techniques or other forms of information technology, e.g., permitting electronic submission of responses.

Burden Statement: EPA believes that the previous ICR (ICR Number 1775.02) overestimated the number of respondents reading the regulations, since ICRs need only burden respondents for reading the regulations in association with the collection of information. Given this, the current ICR assumes that 176 respondents will perform the paperwork requirements and hence will read the regulations. This is consistent with all other ICRs in the Office of Solid Waste. For hazardous remediation waste management sites that wish to utilize the flexibility provided by the optional requirements of the HWIR-media Rule, the estimated total annual hour burden for this information collection is 4,959 hours, which is about 29,000 hours lower than the previous ICR's burden estimate. The estimated total annual cost burden for this information collection is $334,886, which includes labor, capital, operations and maintenance, and purchased service costs. The total burden over the three year period of this ICR is estimated to be 14,877 hours and $1,004,658.

EPA estimates that, on average, 30 sites will be subject to the requirements in 40 CFR 264.1(j) and part 270, subpart H (i.e., the requirements for sites with RAPs) over the three-year period of this ICR. Note that this ICR addresses only non-permitted sites under 40 CFR 264.1(j) and part 270, subpart H. A site may conduct cleanup through a RAP, permit, or other specified mechanism. Permitted facilities would obtain a RAP by modifying their permit. These activities are already addressed in ''Part B Permit Application, Permit Modifications, and Special Permits,'' ICR Number 1573. Therefore, this ICR addresses only non-permitted sites under the RAP requirements.

EPA also estimated the number of owners/operators of hazardous remediation waste management sites subject to the 40 CFR 264.554 requirements for staging piles. Based on the Biennial Reporting System (BRS) data, EPA estimates that, currently, there are 87 existing hazardous remediation waste management sites with staging piles. Additionally, EPA estimates that, each year, 59 owners/operators of non-permitted hazardous remediation waste management sites will seek a new staging pile designation.

EPA estimates that 176 owners/operators of hazardous remediation waste management sites (i.e., 30 + 87 + 59 = 176) will be subject to the requirements in this ICR and will, therefore, read the regulations each year.

For owners/operators of hazardous remediation waste management sites subject to the 40 CFR 264.1(j) and part 270, subpart H requirements, the reporting burden is estimated to be 27.33 hours per respondent per year. This hourly burden includes time for preparing and submitting a RAP application, information to modify a RAP, and information to transfer a RAP. The recordkeeping burden is estimated to be 42.13 hours per respondent per year. This hourly burden includes time for reading the regulations and maintaining documentation (e.g., waste analyses results, contingency and emergency plan, file of RAP documents) on site.

For owners/operators of hazardous remediation waste management sites subject to the 40 CFR 264.554 requirements for staging piles, the reporting burden is estimated to be 7.08 hours per year per respondent. This hourly burden includes time for preparing and submitting information for a staging pile designation and documentation supporting a staging pile extension. The recordkeeping burden is estimated to be 12.61 hours per respondent per year. This hourly burden includes time for reading the regulations and complying with the recordkeeping requirements in section 264.554(d)(1)(iii).

Burden means the total time, effort, or financial resources expended by persons to generate, maintain, retain, or disclose or provide information to or for a Federal agency. This includes the time needed to review instructions; develop, acquire, install, and utilize technology and systems for the purposes of collecting, validating, and verifying information, processing and maintaining information, and disclosing and providing information; adjust the existing ways to comply with any previously applicable instructions and requirements; train personnel to be able to respond to a collection of information; search data sources; complete and review the collection of information; and transmit or otherwise disclose the information.

Dated: March 11, 2002.

Elizabeth Cotsworth,

Director, Office of Solid Waste.

[FR Doc. 02–6723 Filed 3–19–02; 8:45 am]

BILLING CODE 6560–50–P

ENVIRONMENTAL PROTECTION AGENCY

[PF–1070; FRL–6824–4]

Notice of Filing a Pesticide Petition to Establish a Tolerance for a Certain Pesticide Chemical in or on Food

AGENCY: Environmental Protection Agency (EPA).

ACTION: Notice.

SUMMARY: This notice announces the initial filing of a pesticide petition proposing the establishment of regulations for residues of a certain pesticide chemical in or on various food commodities.

DATES: Comments, identified by docket control number PF–1070, must be received on or before April 19, 2002.

ADDRESSES: Comments may be submitted by mail, electronically, or in person. Please follow the detailed instructions for each method as provided in Unit I.C. of the **SUPPLEMENTARY INFORMATION**. To ensure proper receipt by EPA, it is imperative that you identify docket control number PF–1070 in the subject line on the first page of your response.

FOR FURTHER INFORMATION CONTACT: By mail: Thomas C. Harris, Registration Division (7505C), Office of Pesticide Programs, Environmental Protection Agency, 1200 Pennsylvania Ave., NW., Washington, DC 20460; telephone number: (703) 308–9423; e-mail address: harris.thomas@epa.gov.

SUPPLEMENTARY INFORMATION:

I. General Information

A. Does this Action Apply to Me?

You may be affected by this action if you are an agricultural producer, food manufacturer or pesticide manufacturer. Potentially affected categories and entities may include, but are not limited to:

Categories	NAICS codes	Examples of potentially affected entities
Industry	111 112 311 32532	Crop production Animal production Food manufacturing Pesticide manufacturing

This listing is not intended to be exhaustive, but rather provides a guide for readers regarding entities likely to be affected by this action. Other types of entities not listed in the table could also be affected. The North American Industrial Classification System (NAICS) codes have been provided to assist you and others in determining whether or not this action might apply to certain entities. If you have questions regarding the applicability of this action to a particular entity, consult the person listed under **FOR FURTHER INFORMATION CONTACT**.

B. How Can I Get Additional Information, Including Copies of this Document and Other Related Documents?

1. *Electronically*. You may obtain electronic copies of this document, and certain other related documents that might be available electronically, from the EPA Internet Home Page at http://www.epa.gov/. To access this document, on the Home Page select ''Laws and Regulations'' and then look up the entry for this document under the ''**Federal Register**—Environmental Documents.'' You can also go directly to the **Federal Register** listings at http://www.epa.gov/fedrgstr/.

2. *In person*. The Agency has established an official record for this action under docket control number PF–1070. The official record consists of the documents specifically referenced in this action, any public comments received during an applicable comment period, and other information related to this action, including any information claimed as confidential business information (CBI). This official record includes the documents that are physically located in the docket, as well as the documents that are referenced in those documents. The public version of the official record does not include any information claimed as CBI. The public version of the official record, which includes printed, paper versions of any electronic comments submitted during an applicable comment period, is available for inspection in the Public Information and Records Integrity Branch (PIRIB), Rm. 119, Crystal Mall #2, 1921 Jefferson Davis Highway, Arlington, VA, from 8:30 a.m. to 4 p.m., Monday through Friday, excluding legal holidays. The PIRIB telephone number is (703) 305–5805.

C. How and to Whom Do I Submit Comments?

You may submit comments through the mail, in person, or electronically. To ensure proper receipt by EPA, it is imperative that you identify docket control number PF–1070 in the subject line on the first page of your response.

1. *By mail*. Submit your comments to: Public Information and Records Integrity Branch (PIRIB), Information Resources and Services Division (7502C), Office of Pesticide Programs (OPP), Environmental Protection Agency, 1200 Pennsylvania Ave., NW., Washington, DC 20460.

2. *In person or by courier*. Deliver your comments to: Public Information and Records Integrity Branch (PIRIB), Information Resources and Services Division (7502C), Office of Pesticide Programs (OPP), Environmental Protection Agency, Rm. 119, Crystal Mall #2, 1921 Jefferson Davis Highway, Arlington, VA. The PIRIB is open from 8:30 a.m. to 4 p.m., Monday through Friday, excluding legal holidays. The PIRIB telephone number is (703) 305–5805.

3. *Electronically*. You may submit your comments electronically by e-mail to: opp-docket@epa.gov, or you can submit a computer disk as described above. Do not submit any information electronically that you consider to be CBI. Avoid the use of special characters

and any form of encryption. Electronic submissions will be accepted in Wordperfect 6.1/8.0 or ASCII file format. All comments in electronic form must be identified by docket control number PF–1070. Electronic comments may also be filed online at many Federal Depository Libraries.

D. How Should I Handle CBI That I Want to Submit to the Agency?

Do not submit any information electronically that you consider to be CBI. You may claim information that you submit to EPA in response to this document as CBI by marking any part or all of that information as CBI. Information so marked will not be disclosed except in accordance with procedures set forth in 40 CFR part 2. In addition to one complete version of the comment that includes any information claimed as CBI, a copy of the comment that does not contain the information claimed as CBI must be submitted for inclusion in the public version of the official record. Information not marked confidential will be included in the public version of the official record without prior notice. If you have any questions about CBI or the procedures for claiming CBI, please consult the person identified under **FOR FURTHER INFORMATION CONTACT**.

E. What Should I Consider as I Prepare My Comments for EPA?

You may find the following suggestions helpful for preparing your comments:

1. Explain your views as clearly as possible.
2. Describe any assumptions that you used.
3. Provide copies of any technical information and/or data you used that support your views.
4. If you estimate potential burden or costs, explain how you arrived at the estimate that you provide.
5. Provide specific examples to illustrate your concerns.
6. Make sure to submit your comments by the deadline in this notice.
7. To ensure proper receipt by EPA, be sure to identify the docket control number assigned to this action in the subject line on the first page of your response. You may also provide the name, date, and **Federal Register** citation.

II. What Action is the Agency Taking?

EPA has received a pesticide petition as follows proposing the establishment and/or amendment of regulations for residues of a certain pesticide chemical in or on various food commodities under section 408 of the Federal Food, Drug, and Cosmetic Act (FFDCA), 21 U.S.C. 346a. EPA has determined that this petition contains data or information regarding the elements set forth in section 408(d)(2); however, EPA has not fully evaluated the sufficiency of the submitted data at this time or whether the data support granting of the petition. Additional data may be needed before EPA rules on the petition.

List of Subjects

Environmental protection, Agricultural commodities, Feed additives, Food additives, Pesticides and pests, Reporting and recordkeeping requirements.

Dated: March 7, 2002.

Peter Caulkins,

Acting Director, Registration Division, Office of Pesticide Programs.

Summary of Petition

The petitioner summary of the pesticide petition is printed below as required by section 408(d)(3) of the FFDCA. The summary of the petition was prepared by Syngenta Crop Protection and represents the view of the petitioner. EPA is publishing the petition summary verbatim without editing it in any way. The petition summary announces the availability of a description of the analytical methods available to EPA for the detection and measurement of the pesticide chemical residues or an explanation of why no such method is needed.

Syngenta Crop Protection

PP 7F4845

EPA has received a pesticide petition (7F4845) from Syngenta Crop Protection, Inc. (formerly Novartis Crop Protection, Inc.), P.O. Box 18300, Greensboro, NC 27419 proposing, pursuant to section 408(d) of FFDCA, 21 U.S.C. 346a(d), to amend 40 CFR part 180 by establishing a tolerance for residues of emamectin benzoate, 4'-epi-methylamino- 4'-deoxyavermectin B_1 benzoate (a mixture of a minimum of 90% 4'-epi- methylamino-4'-deoxyavermectin B_1a, and a maximum of 10% 4'-epi-methlyamino- 4'-deoxyavermectin B_1b benzoate), and its metabolites 8,9 isomer of the B_1a and B_1b component of the parent insecticide in or on the raw agricultural commodities fruiting vegetables (except cucurbits) group at 0.02 parts per million (ppm), brassica leafy vegetables group at 0.025 ppm, turnip, tops at 0.025 ppm, leafy vegetables (except brassica) group at 0.1 ppm, cottonseed at 0.025 ppm, cotton gin byproducts at 0.5 ppm. This notice is an update to a notice of filing originally published on August 29, 1997 (62 FR 45804) (FRL–5738–2). This new notice represents an amendment to the original petition (7F4845) which only included the fruiting vegetables (except cucurbits) group. EPA has determined that the petition contains data or information regarding the elements set forth in section 408(d)(2) of the FFDCA; however, EPA has not fully evaluated the sufficiency of the submitted data at this time or whether the data support granting of the petition. Additional data may be needed before EPA rules on the petition.

A. Residue Chemistry

1. *Plant metabolism.* The metabolism of emamectin benzoate in plants has been studied in lettuce, cabbage, and sweet corn. The major portion of the residue is parent compound and its delta 8,9- photoisomer. The metabolism of emamectin has also been investigated in goats and poultry to characterize the fate of residues that may be present in animal feed items.

2. *Analytical method.* Adequate analytical methods (HPLC-fluorescence methods) are available for enforcement purposes.

3. *Magnitude of residues.* The appropriate number of residue trials have been conducted for cotton, tomatoes, peppers, leaf lettuce, spinach, head lettuce, celery, and mustard greens. These trials were conducted in the major U.S. growing areas for these crops. Processing studies were conducted to provide tomato product, cottonseed hull, meal, and refined oil samples for analysis.

B. Toxicological Profile

A full description of the studies describing the toxicity, animal metabolism, metabolite toxicology, and endocrine disruption of emamectin benzoate can be found in the posting for its first tolerances in the**Federal Register** of May 19, 1999 (64 FR 27192) (FRL–6079–7).

C. Aggregate Exposure

1. *Dietary exposure.* Emamectin benzoate tolerances have been established for head lettuce, celery, and head and stem brassica vegetables. Syngenta assessed chronic exposure by using the mean of the field trial residue values and projected market share values. The acute exposure assessment was performed as a Tier 3, 5000 iteration, Monte Carlo analysis. Actual field trial residue values were utilized along with market share for each crop.

i. *Food.* Chronic dietary exposure to emamectin benzoate is negligible. Exposure calculations made from conservative residue values generated from field trials conducted at maximum application rates and minimum pre-harvest intervals show that chronic exposure is only 1.1% of the population adjusted dose (PAD) for the most sensitive subpopulation (non-black/non-white/non-hispanics). The second most sensitive subpopulation is children (1–6 years old) with an exposure of 1.0% of the chronic PAD. The chronic PAD is based on a no observable adverse effect level (NOAEL) of 0.075 milligrams/kilogram body weight/day (mg/kg bwt/day) based on a 15-day neurotoxicity study in mice and an uncertainty factor of 900. This uncertainty factor is due to a 100–fold safety factor for interspecies and intraspecies variation and an additional 9–fold safety factor for use of a toxicological study of short duration (3x) plus a FQPA safety factor (3x).

Acute exposure for the most sensitive subpopulation is 26.8% of the acute PAD (aPAD) for non-nursing infants <1 year). The exposure to the U.S. population is 16.7% of the aPAD. These exposures were compared to the same toxicological endpoint as described above for the chronic assessment except an uncertainty factor of 300 was assumed (100–fold for interspecies and intraspecies variation and a 3–fold FQPA safety factor.

ii. *Drinking water—a. Chronic exposure.* The estimated maximum concentrations of emamectin benzoate in surface and ground water are 0.00137 parts per billion (ppb) (Day 56 EEC/3 from GENEEC) and 0.00600 ppb (SCI-GROW), respectively. The chronic PAD for emamectin benzoate is 0.000083 mg/kg bwt/day. From the chronic dietary exposure analysis, an exposure estimate of 0.0000006 mg/kg bwt/day was determined for the U.S. population and 0.0000007, 0.0000008, and 0.0000009 mg/kg/day for the females (13+/nursing), children (1–6 years) and non-hispanic/non-white/non-black subgroups, respectively. Based on EPA's ''Interim Guidance for Conducting Drinking Water Exposure and Risk Assessments'' document (December 2, 1997), chronic drinking water levels of comparison (DWLOC) for emamectin benzoate were calculated to be 3 ppb for the U.S. population and 2, 1, 3 ppb for the females (13+/nursing), children (1–6 years), and non-hispanic/non-white/non-black subgroups, respectively. Based on this analysis, emamectin benzoate estimated environmental concentrations (EECs) do not exceed the calculated chronic DWLOCs.

b. *Acute exposure.* The estimated maximum concentrations of emamectin benzoate in surface and ground water are 0.09688 ppb (peak EEC from GENEEC) and 0.00600 ppb (SCI-GROW), respectively. The aPAD for emamectin benzoate is 0.00025 mg/kg bwt/day. From the acute dietary exposure analysis, the highest acute food exposure from the uses of emamectin benzoate was 0.000042 mg/kg/day at the 99.9th percentile for the U.S. population and 0.000058 and 0.000067 mg/kg/day for the children (1–6 years) and non-nursing infants (<1 yr) subgroups, respectively. Using this information, acute DWLOCs for emamectin benzoate were calculated to be 7 ppb for the U.S. population and 2 ppb and 2 ppb for the children (1–6 years), and non-nursing infants (<1 yr) subgroups, respectively. Based on this analysis, emamectin benzoate EECs do not exceed the calculated acute DWLOCs.

2. *Non-dietary exposure.* No products containing emamectin benzoate have yet been registered under the Federal Insecticide, Fungicide, and Rodenticide Act (FIFRA) for any non-food use. No significant non-dietary, non-occupational exposure is anticipated.

D. Cumulative Effects

Emamectin benzoate is synthetically derived from avermectin, which is derived from *Streptomyces avermitilus*, which produces the insecticide avermectin, which is a mixture of two homologs, avermectin B_1a and B_1b, which have equal biological activity. Currently, the only other member of this class that is registered for agricultural uses is abamectin. Abamectin and ivermectin are structurally similar to emamectin. EPA does not have at this time available data to determine whether emamectin benzoate has a common mechanism of toxicity with other substances or how to include this pesticide in a cumulative risk assessment. Unlike other pesticides for which EPA has followed a cumulative risk approach based upon a common mechanism, emamectin benzoate does not appear to produce a toxic metabolite produced by other substances. For the purpose of this tolerance action, therefore, Syngenta has not assumed that emamectin benzoate has a common mechanism of toxicity with these other substances.

E. Safety Determination

1. *U.S. population*—i. *Acute risk.* Exposure to emamectin benzoate residues in food will occupy no more than 16.7% of the aPAD for adult population subgroups and no more than 26.8% of the aPAD for infant/children subgroups. Residue levels used for food-source dietary risk assessments were highly refined and did incorporate percent of crop treated information. Acute dietary exposure estimates were for the 99.9th percentile. Estimated concentrations of emamectin residues in surface and ground water are lower than the DWLOCs. Therefore, Syngenta does not expect acute aggregate risk to emamectin benzoate residues from food and water sources to exceed the level of concern for acute dietary exposure.

ii. *Chronic risk.* The chronic dietary exposure to emamectin residues in food will occupy no more than 0.7% of the chronic RfD for adult population subgroups and no more than 1.0% PAD for children, 1–6 years old, subgroups. Residue levels used for food-source dietary risk assessments were highly refined and did incorporate percent of crop treated information, as indicated above. The estimated concentrations of emamectin residues in surface and ground water are lower than the DWLOCs. The expected chronic aggregate risk to emamectin residues from food and water sources would not be expected to exceed the level of concern for chronic dietary exposure.

2. *Infants and children.* For emamectin benzoate, the Agency has determined the tenfold safety factor for the protection of infants and children should be reduced to 3x. The rationale for reducing the FQPA safety factor is as follows: No increased susceptibility was demonstrated in rats or rabbits following *in utero* and/or postnatal exposure to emamectin. However, increased susceptibility was demonstrated in a developmental neurotoxicity study in rats.

Although, increased susceptibility was demonstrated in a developmental neurotoxicity study in rats, EPA determined that the 10x factor should be reduced to 3x based on the following weight-of-the-evidence considerations in the developmental neurotoxicity study: (1) The lowest observed adverse effect level (LOAEL) was based on a single effect/end point (i.e., decrease in open field motor activity); (2) the effect at the LOAEL was seen only on postnatal day 17 and was not seen either on earlier day 13 or later day 21 evaluations, whereas, at the high dose (3.6/2.5 mg/kg/day), this effect was seen on postnatal days 13 and 17; (3) the effect at the LOAEL was not accompanied with other toxicity whereas, at the high dose tremors and hind limb splay were also seen; (4) the decreased performance was lower only when compared to the concurrent control; and (5) there was limited (only

two studies) historical control data available for comparison.

Syngenta believes the clinical signs of avermectin-family neurotoxicity seen in neonatal rats are unlikely to be useful predictors of human risk. Young rats are considerably more sensitive to avermectin-type compounds than either adult rats or humans and other primates. (In neonatal rats, unlike humans, the P-glycoprotein levels are only a small fraction of the levels seen in adult rats.) Moreover, data from clinical experience with ivermectin, a related human drug, and studies on ivermectin and abamectin, a related pesticide, demonstrate that both the neonatal rat and the CF–1 mouse overpredict the toxicity of the avermectin-type compounds to humans and to non-human primates.

3. *Conclusion.* There is a complete toxicity data base for emamectin benzoate and exposure data are complete or are conservatively estimated based on data that reasonably account for potential exposures. Based on these risk assessments, Syngenta concludes that, there is a reasonable certainty that no harm will result to infants and children from aggregate exposure to emamectin benzoate residues.

F. International Tolerances

No Codex maximum residue levels have been established for residues of emamectin benzoate.

[FR Doc. 02–6615 Filed 3–19–02; 8:45 am]

BILLING CODE 6560–50–S

EXECUTIVE OFFICE OF THE PRESIDENT

Information Collection Activities and Request for Comments

AGENCY: Office of National Drug Control Policy, Executive.

ACTION: Notice.

SUMMARY: The National Youth Anti-Drug Media Campaign is a program within the Office of National Drug Control Policy (ONDCP). To generate anti-drug awareness, the Media Campaign has partnered with the Advertising Council to create an advertising campaign that encourages local community coalitions to engage in drug prevention activities. In addition, the partnership proposes to collect information from interested adults to determine whether public service advertising increases participation in local coalition activities, the usefulness of local public service announcements, and community response to public service announcements. ONDCP invites comments on the (a) information necessary to accurately measure partnership efforts; (b) quality, utility and clarity of the information; (c) methods that minimize the burden of information collection techniques; and (d) accuracy of the estimated burden of information collection.

FOR FURTHER INFORMATION CONTACT: Gem Benoza (202) 395–4625.

Dated: March 13, 2002.

Don Maple,

Media Campaign Deputy Director.

[FR Doc. 02–6716 Filed 3–19–02; 8:45 am]

BILLING CODE 3180–02–U

FEDERAL MARITIME COMMISSION

Notice of Agreement(s) Filed

The Commission hereby gives notice of the filing of the following agreement(s) under the Shipping Act of 1984. Interested parties can review or obtain copies of agreements at the Washington, DC offices of the Commission, 800 North Capitol Street, NW., Room 940. Interested parties may submit comments on an agreement to the Secretary, Federal Maritime Commission, Washington, DC 20573, within 10 days of the date this notice appears in the **Federal Register**.

Agreement No.: 011793.

Title: Maersk Sealand/Great Western Asia-U.S. West Coast Slot Charter Agreement.

Parties: A.P. Moller-Maersk Sealand, Great Western Steamship Company.

Synopsis: Under the proposed agreement, Great Western will charter container slots from Maersk Sealand in the trade between U.S. West Coast ports and ports in Asia. The parties request expedited review.

Agreement No.: 011794.

Title: COSCON/KL/YMUK/Hanjin/Senator Asia & Europe/U.S. Atlantic & Gulf Coast Slot Allocation & Sailing Agreement.

Parties: COSCO Container Lines Company, Limited, Hanjin Shipping Co., Ltd., Kawasaki Kisen Kaisha, Ltd., Senator Lines GmbH, Yangming (UK) Ltd.

Synopsis: Under the proposed agreement, the parties will be selling or exchanging container slots and coordinating their services in the trades between U.S. Atlantic and Gulf ports and ports in Asia, Central America, and Europe.

Agreement No.: 201087–001.

Title: Oakland-International Transportation Marine Terminal Agreement.

Parties: City of Oakland, Board of Port Commissioners, International Transportation Service, Inc.

Synopsis: The proposed amendment foresees the replacement of cranes with resultant changes in the breakpoint level and the minimum annual guarantee as well as a change in the extent of the premises covered by the agreement. The agreement continues to run through June 30, 2003.

Agreement No.: 201131.

Title: NY/NJ-Maher Lease Agreement.

Parties: The Port Authority of New York and New Jersey, Maher Terminals, Inc.

Synopsis: The agreement covers the lease of a marine terminal at the port authority's Elizabeth Marine Terminal. The agreement runs through September 30, 2030.

Agreement No.: 201132.

Title: NY/NJ-Port Newark Container Terminal LLC Lease Agreement.

Parties: The Port Authority of New York and New Jersey, Port Newark Container Terminal LLC.

Synopsis: The agreement covers the lease of a marine terminal at the port authority's Newark Marine Terminal. The agreement runs through November 30, 2030.

Dated: March 15, 2002.

By Order of the Federal Maritime Commission.

Bryant L. VanBrakle,

Secretary.

[FR Doc. 02–6746 Filed 3–19–02; 8:45 am]

BILLING CODE 6730–01–P

FEDERAL MARITIME COMMISSION

Request for Additional Information

The Commission gives notice that it has requested that the parties to the below listed agreement provide additional information pursuant to section 6(d) of the Shipping Act of 1984, 46 U.S.C. app. 1705(d). The Commission has determined that further information is necessary to evaluate the impact of the proposed Reefer Trade Management Program. This action prevents the agreement from becoming effective as originally scheduled.

The Commission also gives notice that it has determined to hold an oral hearing at which interested parties may present information and views on the likely effects of the proposed Reefer Trade Management Program on competition, transportation services, and transportation costs for shippers of refrigerated cargo. The Commission will establish the date, specific issues to be heard, and procedures for this hearing by further notice.

Agreement No.: 011325–027.

Title: Westbound Transpacific Stabilization Agreement.

Parties: American President Lines, Ltd., APL Co. PTE, A.P. Miller-Maersk Sealand, COSCO Container Lines, Evergreen Marine Corporation, Hanjin Shipping Company, Ltd., Hapag-Lloyd Container Linie GmbH, Hyundai Merchant Marine Co., Ltd., Kawasaki Kisen Kaisha, Ltd., Mitsui O.S.K. Lines, Ltd., Nippon Yusen Kaisha, Orient Overseas Container Line Limited, P&O Nedlloyd B.V., P&O Nedlloyd Limited, Yangming Marine Transport Corp.

By Order of the Federal Maritime Commission.

Dated: March 15, 2002.

Bryant L. VanBrakle,

Secretary.

[FR Doc. 02–6744 Filed 3–19–02; 8:45 am]

BILLING CODE 6730–01–P

FEDERAL MARITIME COMMISSION

Ocean Transportation Intermediary License Revocations

The Federal Maritime Commission hereby gives notice that the following Ocean Transportation Intermediary licenses have been revoked pursuant to section 19 of the Shipping Act of 1984 (46 U.S.C. app. 1718) and the regulations of the Commission pertaining to the licensing of Ocean Transportation Intermediaries, effective on the corresponding date shown below:

License Number: 16183N.

Name: AJ International Shipping/ Logistics, Inc.

Address: 4548 Mundy Road, Jacksonville, FL 32207.

Date Revoked: February 6, 2002.

Reason: Failed to maintain valid bond.

License Number: 4088F.

Name: Able Freight Services, Inc.

Address: 5340 W. 104th Street, Los Angeles, CA 90045.

Date Revoked: February 10, 2002.

Reason: Failed to maintain valid bond.

License Number: 4503F

Name: Aimar USA, Inc.

Address: 7500 W. 18th Lane, Hialeah, FL 33014.

Date Revoked: February 11, 2002.

Reason: Failed to maintain a valid bond.

License Number: 3202F.

Name: BWI Transworld Illinois, Inc.

Address: 765 Route 83, Suite 112, Bensenville, IL 60106.

Date Revoked: February 2, 2002.

Reason: Failed to maintain a valid bond.

License Number: 506F.

Name: DBM Logistics, Inc.

Address: 5130 Franklintown Road, Baltimore, MD 21207.

Date Revoked: February 16, 2002.

Reason: Failed to maintain a valid bond.

License Number: 4425F.

Name: Esprit International Shipping Combined Transport, Inc. dba Capital Freight Management.

Address: 701 S. Atlantic Blvd., Suite 200, Monterey Park, CA 91754.

Date Revoked: February 13, 2002.

Reason: Failed to maintain a valid bond.

License Number: 15791N.

Name: Fast Service Inc.

Address: 206 Warren Street, Harrison, NJ 07029.

Date Revoked: February 17, 2002.

Reason: Failed to maintain a valid bond.

License Number: 3968F.

Name: Flamingo Freight Forwarders, Inc.

Address: 9921 NW 80th Avenue, Bay 1–Q, Hialeah Gardens, FL 33016.

Date Revoked: February 22, 2002.

Reason: Failed to maintain a valid bond.

License Number: 17080N.

Name: General Cargo & Logistics.

Address: 4261 182nd Street, Suite J, Torrance, CA 90504.

Date Revoked: February 23, 2002.

Reason: Failed to maintain a valid bond.

License Number: 3886NF.

Name: Goodship International, Inc.

Address: 1058 Tower Lane, Bensenville, IL 60106.

Date Revoked: February 27, 2002.

Reason: Surrendered license voluntarily.

License Number: 16421N.

Name: Korea Express Atlanta, Inc. dba Korea Freight Line, Inc.

Address: 5559 New Peachtree Road, Chamblee, GA 30341.

Date Revoked: February 16, 2002.

Reason: Failed to maintain a valid bond.

License Number: 3217F.

Name: Kremer International Transport, Inc.

Address: 3501 Watson Road, St. Louis, MO 63139.

Date Revoked: February 13, 2002.

Reason: Failed to maintain a valid bond.

License Number: 4547NF.

Name: Millennium Shipping Company.

Address: 4100 East 51st Street, Suite 104, Tulsa, OK 74135.

Date Revoked: February 2, 2002.

Reason: Failed to maintain a valid bond.

License Number: 15292N.

Name: Moon Beam International, Inc.

Address: 2740 Tonawanda Creek Road, Amherst, NY 14228.

Date Revoked: February 13, 2002.

Reason: Failed to maintain a valid bond.

License Number: 1739F.

Name: Ronald D. Stribling dba Ronald D. Stribling Company.

Address: 4110 NE 122nd Avenue, Suite 140, Portland, OR 97230.

Date Revoked: February 13, 2002.

Reason: Failed to maintain a valid bond.

License Number: 13490N.

Name: Sotby Transocean Line, Inc.

Address: 1630 Bath Avenue, Brooklyn, NY 11214.

Date Revoked: January 18, 2002.

Reason: Failed to maintain a valid bond.

License Number: 16655N.

Name: Vayer L.A., Inc.

Address: 11755 Sheldon Street, Sun Valley, CA 91352.

Date Revoked: February 22, 2002.

Reason: Failed to maintain a valid bond.

Ronald D. Murphy,

Deputy Director, Bureau of Consumer Complaints and Licensing.

[FR Doc. 02–6743 Filed 3–19–02; 8:45 am]

BILLING CODE 6730–01–P

FEDERAL MARITIME COMMISSION

Ocean Transportation Intermediary License Reissuances

Notice is hereby given that the following Ocean Transportation Intermediary licenses have been reissued by the Federal Maritime Commission pursuant to section 19 of the Shipping Act of 1984, as amended by the Ocean Shipping Reform Act of 1998 (46 U.S.C. app. 1718) and the regulations of the Commission pertaining to the licensing of Ocean Transportation Intermediaries, 46 CFR 515.

License No.	Name/address	Date reissued
17090N	Inter-Connect Transportation, Inc., 8901 S. La Cienega Blvd., Suite 210, Inglewood, CA 90301.	December 8, 2001.
6313N	Puerto Rico Freight Systems, Inc., P. O. Box 9081, Building 11, International Mercantile Center, Guaynabo P.R. 00908.	October 19, 2001.
4134F	World Exchange, Inc., 8840 Bellanca Avenue, Los Angeles, CA 90045.	August 18, 2001.

Ronald D. Murphy,

Deputy Director, Bureau of Consumer Complaints and Licensing.

[FR Doc. 02–6745 Filed 3–19–02; 8:45 am]

BILLING CODE 6730–01–P

FEDERAL RESERVE SYSTEM

Formations of, Acquisitions by, and Mergers of Bank Holding Companies

The companies listed in this notice have applied to the Board for approval, pursuant to the Bank Holding Company Act of 1956 (12 U.S.C. 1841 *et seq.*) (BHC Act), Regulation Y (12 CFR Part 225), and all other applicable statutes and regulations to become a bank holding company and/or to acquire the assets or the ownership of, control of, or the power to vote shares of a bank or bank holding company and all of the banks and nonbanking companies owned by the bank holding company, including the companies listed below.

The applications listed below, as well as other related filings required by the Board, are available for immediate inspection at the Federal Reserve Bank indicated. The application also will be available for inspection at the offices of the Board of Governors. Interested persons may express their views in writing on the standards enumerated in the BHC Act (12 U.S.C. 1842(c)). If the proposal also involves the acquisition of a nonbanking company, the review also includes whether the acquisition of the nonbanking company complies with the standards in section 4 of the BHC Act (12 U.S.C. 1843). Unless otherwise noted, nonbanking activities will be conducted throughout the United States. Additional information on all bank holding companies may be obtained from the National Information Center website at www.ffiec.gov/nic/.

Unless otherwise noted, comments regarding each of these applications must be received at the Reserve Bank indicated or the offices of the Board of Governors not later than April 12, 2002.

A. Federal Reserve Bank of San Francisco (Maria Villanueva, Consumer Regulation Group) 101 Market Street, San Francisco, California 94105–1579:

1. Plumas Bancorp, Quincy, California; to become a bank holding company by acquiring 100 percent of the voting shares of Plumas Bank, Quincy, California.

Board of Governors of the Federal Reserve System, March 14, 2002.

Robert deV. Frierson,

Deputy Secretary of the Board.

[FR Doc. 02–6637 Filed 3–19–02; 8:45 am]

BILLING CODE 6210–01–S

DEPARTMENT OF HEALTH AND HUMAN SERVICES

Centers for Disease Control and Prevention

[60Day–02–36]

Proposed Data Collections Submitted for Public Comment and Recommendations

In compliance with the requirement of Section 3506(c)(2)(A) of the Paperwork Reduction Act of 1995 for opportunity for public comment on proposed data collection projects, the Centers for Disease Control and Prevention (CDC) will publish periodic summaries of proposed projects. To request more information on the proposed projects or to obtain a copy of the data collection plans and instruments, call the CDC Reports Clearance Officer on (404) 487–1210.

Comments are invited on: (a) Whether the proposed collection of information is necessary for the proper performance of the functions of the agency, including whether the information shall have practical utility; (b) the accuracy of the agency's estimate of the burden of the proposed collection of information; (c) ways to enhance the quality, utility, and clarity of the information to be collected; and (d) ways to minimize the burden of the collection of information on respondents, including through the use of automated collection techniques or other forms of information technology. Send comments to Seleda Perryman, CDC Assistant Reports Clearance Officer, 1600 Clifton Road, MS–D24, Atlanta, GA 30333. Written comments should be received within 60 days of this notice.

Proposed Project: The CDC/ATSDR Educational Loan Repayment Program (ELRP)—New—Office of the Director, Human Resources Management Office, Centers for Disease Control and Prevention and the Agency for Toxic Substances and Disease Registry (CDC/ATSDR).

The Centers for Disease Control and Prevention (CDC) intends to implement an Educational Loan Repayment Program (ELRP) authorized under 42 U.S.C. Sect. 247b-7 as a recruitment and retention incentive for highly qualified health professionals in hard-to-fill positions. The ELRP will be implemented on a pilot basis with up to fifteen (15) loans.

Under the ELRP, a maximum of $35,000 a year (plus 39 per cent of total loan repayment for tax credit as loan repayment benefits represent taxable income) may be repaid toward a participant's outstanding eligible educational debt. The participant is responsible for a loan repayment equal to a total of 10 percent of his/her annual CDC base salary, while the ELRP will repay at a rate of one-third (⅓) of the remaining repayable debt (up to the maximum allowable) for each of the three (3) years. The participant must sign a contract agreeing to remain employed by CDC for a period of not less than three years. Failure to complete the minimum three-year service agreement period will be considered a breach of contract and will subject the ELRP participant to assessment of monetary penalties and damages. Actual loan repayment amounts are based on the proportion of a participant's qualifying debt relative to his/her beginning CDC base salary.

Overall ELRP eligibility requirements:

a. Be a citizen of the United States;

b. Hold a relevant Doctoral degree or equivalent;

c. Have been selected for a vacant position or is currently assigned to a covered hard-to-fill health professional occupational series at CDC/ATSDR; and,

d. Have a qualifying educational debt in excess of 20 percent of their annual CDC base salary.

There are no costs to respondents.

Respondents	Number of respondents	Responses/ respondent	Avg. burden per response (in hrs)	Total burden (in hrs)
Supervisor	15	1	15/60	4
Applicant	15	1	15/60	4
Lender	45	1	30/60	23
Total				31

Dated: March 14, 2002.

Nancy E. Cheal,

Acting Associate Director for Policy, Planning and Evaluation, Centers for Disease Control and Prevention.

[FR Doc. 02–6680 Filed 3–19–02; 8:45 am]

BILLING CODE 4163–18–P

DEPARTMENT OF HEALTH AND HUMAN SERVICES

Centers for Disease Control and Prevention

National Vaccine Advisory Committee/ Vaccine Supply Conference Call

In accordance with section 10(a)(2) of the Federal Advisory Committee Act (Pub. L. 92–463), the Centers for Disease Control and Prevention (CDC) announces the following Federal Advisory Committee meeting.

Name: National Vaccine Advisory Committee (NVAC) Vaccine Supply Conference Call.

Time and Date: 11 a.m.–1 p.m., April 1, 2002.

Place: Audio Conference Call.

Status: This meeting is open to the public, telephone lines are limited. The public can join the meeting by Audio Conference Call by calling (888) 398–1687 and providing the following information:

Pass code: Peter.

Leaders Name: Dr. Georges Peter.

Purpose: This committee advises and makes recommendations to the Director of the National Vaccine Program on matters related to the Program responsibilities.

Matters To Be Discussed: To discuss recommendations from the NVAC Workshop on Strengthening the Vaccine Supply.

Agenda items are subject to change as priorities dictate.

Public comments will be permitted at the end of the NVAC meeting on April 1, 2002.

Contact Person for More Information: Gloria Sagar, Committee Management Specialist, NVPO, CDC, 4770 Buford Highway, M/S K–77, Atlanta, Georgia 30341, telephone (770)488–2040.

The Director, Management Analysis and Services Office, has been delegated the authority to sign **Federal Register** notices pertaining to announcements of meetings and other committee management activities for both the Centers for Disease Control and Prevention and the Agency for Toxic Substances and Disease Registry.

Dated: March 12, 2002.

Alvin Hall,

Acting Director, Management Analysis and Services Office, Centers for Disease Control and Prevention.

[FR Doc. 02–6681 Filed 3–19–02; 8:45 am]

BILLING CODE 4163–18–P

DEPARTMENT OF HEALTH AND HUMAN SERVICES

Centers for Disease Control and Prevention

Proposed Criteria for Selecting New Environmental Chemicals or Categories of Chemicals for Analytic Development and for Inclusion in Future Releases of the National Report on Human Exposure to Environmental Chemicals

AGENCY: Centers for Disease Control and Prevention (CDC), Health and Human Services (HHS).

ACTION: Notice.

SUMMARY: Requests public comment on CDC's proposed criteria for selecting new environmental chemicals or categories of chemicals for analytical method development and for selecting additional environmental chemicals or categories of chemicals to appear in future releases of the ''National Report on Human Exposure to Environmental Chemicals'' (the ''Report''). The proposed criteria for choosing new environmental chemicals or categories of chemicals for analytic development and for including chemicals or categories of chemicals in future editions of the ''Report'' are as follows: (1) Independent scientific data which suggest that the potential for exposure of the U.S. population to a particular chemical is changing or persisting; (2) seriousness of health effects known or suspected to result from exposure to the chemical (for example, cancer and birth defects); (3) the proportion of the U.S. population likely to be exposed to levels of chemicals of known or potential health significance; (4) the need to assess the efficacy of public health actions to reduce exposure to a chemical in the U.S. population or a large component of the U.S. population (for example, in children); (5) the existence of an analytic method that can measure the chemical or its metabolite in blood or urine with adequate accuracy, precision, sensitivity, specificity, and speed; and (6) the incremental analytical cost (in dollars and personnel) to perform the analyses (preference is given to chemicals that can be added readily to existing analytical methods). After reviewing and incorporating public comments from this announcement, CDC will publish the criteria in their final form in the **Federal Register** along with a general notice requesting public nominations of new chemicals that satisfy the new criteria. The criteria will be used by experts to prioritize the nominated chemicals for analytical method development and for eventual inclusion in the ''Report.''

DATES: Submit comments on or before April 19, 2002.

ADDRESSES: Address all comments concerning this notice to Dorothy Sussman, Centers for Disease Control and Prevention, National Center for Environmental Health, Division of Laboratory Sciences, Mail Stop F–20, 4770 Buford Highway, Atlanta, Georgia 30341.

FOR FURTHER INFORMATION CONTACT: Technical Information: Dr. Richard Wang, Telephone 770–488–7950

SUPPLEMENTARY INFORMATION: The ''Report'' provides an ongoing assessment of the exposure of the U.S. population to environmental chemicals using biomonitoring. (The ''Report'' is published by CDC under the authoritities 42 U.S.C. 241 and 42 U.S.C. 242k). For the ''Report,'' an environmental chemical means a chemical compound or chemical element present in air, water, soil, dust, food, or other environmental media. Biomonitoring is the assessment of human exposure to chemicals by measuring the chemicals or their breakdown products in human specimens, such as blood or urine. The ''Report'' provides this exposure information about participants in an ongoing national survey known as the National Health and Nutrition Examination Survey (NHANES). This

survey is conducted by CDC's National Center for Health Statistics; measurements are conducted by CDC's National Center for Environmental Health. The first ''Report,'' published in March 2001, gave information about levels of 27 chemicals found in the U.S. population. The ''Report'' can be obtained at the following: *www.cdc.gov/nceh/dls/report/*'; email *ncehdls@cdc.gov* or Telephone 1–866–670–6052. In addition to those chemicals in the first ''Report,'' the following categories or classes of environmental chemicals will be in the second ''Report:'' polycyclic aromatic hydrocarbons (PAHs), co-planar and non-planar polychlorinated biphenyls (PCBs), persistent organochlorine pesticides, carbamate pesticides, dioxins, and furans.

Future editions of the ''Report'' will provide detailed assessments of exposure levels among different population groups defined by sex, race/ethnicity, age, urban /rural residence, education level, income, and other characteristics. Over time, CDC will be able to track trends in exposure levels. Future editions may also include additional exposure information for special-exposure populations (*e.g.,* children) from studies of people through localized or point sources and from studies of adverse health effects resulting from exposure to varying levels of environmental chemicals.

Dated: March 12, 2002.

Joseph R. Carter,

Associate Director for Management and Operations, Centers for Disease Control and Prevention (CDC).

[FR Doc. 02–6624 Filed 3–19–02; 8:45 am]

BILLING CODE 4163–18–P

DEPARTMENT OF HEALTH AND HUMAN SERVICES

Centers for Medicare and Medicaid Services

[Document Identifier: CMS–R–74]

Agency Information Collection Activities: Proposed Collection; Comment Request

AGENCY: Centers for Medicare and Medicaid Services, HHS.

In compliance with the requirement of section 3506(c)(2)(A) of the Paperwork Reduction Act of 1995, the Centers for Medicare and Medicaid Services (CMS) (formerly known as the Health Care Financing Administration (HCFA)), Department of Health and Human Services, is publishing the following summary of proposed collections for public comment. Interested persons are invited to send comments regarding this burden estimate or any other aspect of this collection of information, including any of the following subjects: (1) The necessity and utility of the proposed information collection for the proper performance of the agency's functions; (2) the accuracy of the estimated burden; (3) ways to enhance the quality, utility, and clarity of the information to be collected; and (4) the use of automated collection techniques or other forms of information technology to minimize the information collection burden.

Type of Information Collection Request: Extension of a currently approved collection.

Title of Information Collection: Income and Eligibility Verification System (IEVS) and Supporting Regulations in 42 CFR 435.940–435.965.

Form No.: CMS–R–74 (OMB# 0938–0467).

Use: Section 1137 of the Social Security Act requires Medicaid State agencies and other federally funded welfare agencies to request income and resource data from certain federal agencies, State wage information collection agencies, and State unemployment compensation agencies through an IEVS. The purpose of the IEVS is to ensure that only eligible individuals receive benefits.

Frequency: Annually.

Affected Public: State, local, or tribal government.

Number of Respondents: 54.

Total Annual Responses: 54.

Total Annual Hours: 131,390.

To obtain copies of the supporting statement and any related forms for the proposed paperwork collections referenced above, access CMS's Web Site address at *http://www.hcfa.gov/regs/prdact95.htm*, or e-mail your request, including your address, phone number, OMB number, and CMS document identifier, to *Paperwork@hcfa.gov*, or call the Reports Clearance Office on (410) 786–1326. Written comments and recommendations for the proposed information collections must be mailed within 60 days of this notice directly to the CMS Paperwork Clearance Officer designated at the following address:

CMS, Office of Information Services, Security and Standards Group, Division of CMS Enterprise Standards, Attention: Julie Brown, CMS–R–74, Room N2–14–26, 7500 Security Boulevard, Baltimore, Maryland 21244–1850.

Dated: March 12, 2002.

John P. Burke, III,

Reports Clearance Officer, Security and Standards Group, Division of CMS Enterprise Standards.

[FR Doc. 02–6751 Filed 3–19–02; 8:45 am]

BILLING CODE 4120–03–P

DEPARTMENT OF HEALTH AND HUMAN SERVICES

Centers for Medicare and Medicaid Services

[Document Identifier: CMS—416]

Agency Information Collection Activities: Proposed Collection; Comment Request

AGENCY: Centers for Medicare and Medicaid Services, HHS.

In compliance with the requirement of section 3506(c)(2)(A) of the Paperwork Reduction Act of 1995, the Centers for Medicare and Medicaid Services (CMS) (formerly known as the Health Care Financing Administration (HCFA)), Department of Health and Human Services, is publishing the following summary of proposed collections for public comment. Interested persons are invited to send comments regarding this burden estimate or any other aspect of this collection of information, including any of the following subjects: (1) The necessity and utility of the proposed information collection for the proper performance of the agency's functions; (2) the accuracy of the estimated burden; (3) ways to enhance the quality, utility, and clarity of the information to be collected; and (4) the use of automated collection techniques or other forms of information technology to minimize the information collection burden.

Type of Information Collection Request: Extension of a currently approved collection.

Title of Information Collection: Annual Early and Periodic Screening, Diagnostic, and Treatment Services (EPSDT) Participation Report and Supporting Regulations in 42 CFR 441.60.

Form No.: CMS–416 (OMB# 0938–0354).

Use: States are required to submit an annual report on the provision of EPSDT services to CMS pursuant to section 1902(a)(43) of the Social Security Act. These reports provide CMS with data necessary to assess the effectiveness of State EPSDT programs. It is also helpful in developing trend patterns, national projections, responding to inquiries, and

determining a State's results in achieving its participation goal.

Frequency: Annually.

Affected Public: State, Local or Tribal Government.

Number of Respondents: 56;

Total Annual Responses: 56.

Total Annual Hours: 1,568.

To obtain copies of the supporting statement and any related forms for the proposed paperwork collections referenced above, access CMS's Web Site address at *http://www.hcfa.gov/regs/prdact95.htm,* or e-mail your request, including your address, phone number, OMB number, and CMS document identifier, to *Paperwork@hcfa.gov,* or call the Reports Clearance Office on (410) 786–1326. Written comments and recommendations for the proposed information collections must be mailed within 60 days of this notice directly to the CMS Paperwork Clearance Officer designated at the following address:

CMS, Office of Information Services, Security and Standards Group, Division of CMS Enterprise Standards, Attention: Julie Brown, CMS–416, Room N2–14–26, 7500 Security Boulevard, Baltimore, Maryland 21244–1850.

Dated: March 12, 2002.

John P. Burke, III,

Reports Clearance Officer, Security and Standards Group, Division of CMS Enterprise Standards.

[FR Doc. 02–6752 Filed 3–19–02; 8:45 am]

BILLING CODE 4120–03–P

DEPARTMENT OF HEALTH AND HUMAN SERVICES

Centers for Medicare and Medicaid Services

[Document Identifier: CMS–1880/1882]

Agency Information Collection Activities: Proposed Collection; Comment Request

AGENCY: Centers for Medicare and Medicaid Services, HHS.

In compliance with the requirement of section 3506(c)(2)(A) of the Paperwork Reduction Act of 1995, the Centers for Medicare and Medicaid Services (CMS) (formerly known as the Health Care Financing Administration (HCFA)), Department of Health and Human Services, is publishing the following summary of proposed collections for public comment. Interested persons are invited to send comments regarding this burden estimate or any other aspect of this collection of information, including any of the following subjects: (1) The necessity and utility of the proposed information collection for the proper performance of the agency's functions; (2) the accuracy of the estimated burden; (3) ways to enhance the quality, utility, and clarity of the information to be collected; and (4) the use of automated collection techniques or other forms of information technology to minimize the information collection burden.

Type of Information Collection Request: Extension of a currently approved collection.

Title of Information Collection: Request for Certification as Supplier of Portable X-ray Services under the Medicare/Medicaid Program for Portable X-ray Survey Report and Supporting Regulations in 42 CFR 486.100—486.110.

Form No.: CMS–1880/1882 (OMB# 0938–0027).

Use: The Medicare program requires portable X-ray suppliers to be surveyed for health and safety standards. The CMS–1880 is used by the surveyor to determine if a portable X-ray applicant meets the eligibility requirements. It also promotes data reduction or introduction, and retrieval from the Online Survey Certification and Reporting (OSCAR) System by the CMS Regional Offices. The CMS–1882 is the survey form that records survey results. The form is primarily a coding work sheet designed to facilitate data reduction and retrieval into the OSCAR system at the CMS Regional Offices.

Frequency: On occasion.

Affected Public: Business or other for profit.

Number of Respondents: 655.

Total Annual Responses: 98.

Total Annual Hours: 172.

To obtain copies of the supporting statement and any related forms for the proposed paperwork collections referenced above, access CMS's Web Site address at *http://www.hcfa.gov/regs/prdact95.htm,* or e-mail your request, including your address, phone number, OMB number, and CMS document identifier, to *Paperwork@hcfa.gov,* or call the Reports Clearance Office on (410) 786–1326. Written comments and recommendations for the proposed information collections must be mailed within 60 days of this notice directly to the CMS Paperwork Clearance Officer designated at the following address:

CMS, Office of Information Services, Security and Standards Group, Division of CMS Enterprise Standards, Attention: Julie Brown, CMS–1880/1882, Room N2–14–26, 7500 Security Boulevard, Baltimore, Maryland 21244–1850.

Dated: March 12, 2002.

John P. Burke, III,

Reports Clearance Officer, Security and Standards Group, Division of CMS Enterprise Standards.

[FR Doc. 02–6753 Filed 3–19–02; 8:45 am]

BILLING CODE 4120–03–P

DEPARTMENT OF HEALTH AND HUMAN SERVICES

Centers for Medicare and Medicaid Services

[Document Identifier: CMS–R–299]

Agency Information Collection Activities: Proposed Collection; Comment Request

AGENCY: Centers for Medicare and Medicaid Services, HHS.

In compliance with the requirement of section 3506(c)(2)(A) of the Paperwork Reduction Act of 1995, the Centers for Medicare and Medicaid Services (CMS) (formerly known as the Health Care Financing Administration (HCFA)), Department of Health and Human Services, is publishing the following summary of proposed collections for public comment. Interested persons are invited to send comments regarding this burden estimate or any other aspect of this collection of information, including any of the following subjects: (1) The necessity and utility of the proposed information collection for the proper performance of the agency's functions; (2) the accuracy of the estimated burden; (3) ways to enhance the quality, utility, and clarity of the information to be collected; and (4) the use of automated collection techniques or other forms of information technology to minimize the information collection burden.

Type of Information Collection Request: Revision of a currently approved collection.

Title of Information Collection: A Project to Develop an Outcome-Based Continuous Quality Improvement System and Core Outcome and Comprehensive Assessment Data Set for PACE.

Form No.: CMS–R–299CMS—(OMB# 0938–0791).

Use: The purpose of this project is to develop an outcome-based continuous quality improvement (OBCQI) system and core comprehensive assessment data set for the PACE program by (a) developing and testing a set of data items for core outcome and comprehensive assessment (COCOA), (b) testing risk-adjustment methods so each site's outcomes can be

appropriately evaluated, (c) designing an OBCQI approach to improve quality in a systematic, evolutionary manner, and (d) testing the usefulness of the data items for assessment and care planning. A three-phase field test will result in the refinement of the draft COCOA data items and protocols as needed. Findings from the project are intended to guide the possible implementation of a national approach for OBCQI and core comprehensive assessment for PACE.

Frequency: On Occasion.

Affected Public: Not-for-profit institutions and individuals or households.

Number of Respondents: 8,298.

Total Annual Responses: 90,070.

Total Annual Hours: 22,503.77.

To obtain copies of the supporting statement and any related forms for the proposed paperwork collections referenced above, access CMS's Web Site address at *http://www.hcfa.gov/regs/prdact95.htm,* or e-mail your request, including your address, phone number, OMB number, and CMS document identifier, to *Paperwork@hcfa.gov,* or call the Reports Clearance Office on (410) 786–1326. Written comments and recommendations for the proposed information collections must be mailed within 60 days of this notice directly to the CMS Paperwork Clearance Officer designated at the following address: CMS, Office of Information Services, Security and Standards Group, Division of CMS Enterprise Standards, Attention: Melissa Musotto, Room N2–14–26, 7500 Security Boulevard, Baltimore, Maryland 21244–1850.

Dated: March 12, 2002.

John P. Burke, III,

Reports Clearance Officer, Security and Standards Group, Division of CMS Enterprise Standards.

[FR Doc. 02–6756 Filed 3–19–02; 8:45 am]

BILLING CODE 4120–03–P

DEPARTMENT OF HEALTH AND HUMAN SERVICES

Food and Drug Administration

[Docket No. 00D–1542]

Draft Guidance for Industry on Electronic Records; Electronic Signatures, Time Stamps; Availability

AGENCY: Food and Drug Administration, HHS.

ACTION: Notice.

SUMMARY: The Food and Drug Administration (FDA) is announcing the availability of a draft guidance for industry entitled ''Guidance for Industry, 21 CFR Part 11; Electronic Records; Electronic Signatures, Time Stamps.'' The draft guidance describes the agency's current thinking on issues pertaining to the use of computer generated time stamps in computer systems subject to part 11 (21 CFR part 11) requirements, to ensure that electronic records and electronic signatures are trustworthy, reliable, and compatible with FDA's public health responsibilities. The use of the computer generated time stamps is a requirement of part 11 of title 21 of the Code of Federal Regulations.

DATES: Submit written or electronic comments on the draft guidance by June 18, 2002. General comments on agency guidance documents are welcome at any time.

ADDRESSES: Submit written requests for single copies of the draft guidance to the Division of Compliance Information and Quality Assurance (HFC–240), Office of Enforcement, 5600 Fishers Lane, Rockville, MD 20857. Send one self-addressed adhesive label to assist that office in processing your requests. Submit written comments on the draft guidance document to the Dockets Management Branch (HFA–305), Food and Drug Administration, 5630 Fishers Lane, rm. 1060, Rockville, MD 20852. Submit electronic comments to http://www.fda.gov/dockets/ecomments. See the **SUPPLEMENTARY INFORMATION** section for electronic access to the draft guidance document.

FOR FURTHER INFORMATION CONTACT: Paul J. Motise, Office of Enforcement (HFC–240), Food and Drug Administration, 5600 Fishers Lane, Rockville, MD 20857, 301–827–0383, e-mail: pmotise@ora.fda.gov.

SUPPLEMENTARY INFORMATION:

I. Background

FDA is announcing the availability of a draft guidance entitled ''Guidance for Industry, 21 CFR Part 11; Electronic Records; Electronic Signatures, Time Stamps.'' In the **Federal Register** of March 20, 1997 (62 FR 13430), FDA published a regulation providing criteria under which the agency considers electronic records and electronic signatures to be trustworthy, reliable, and generally equivalent to paper records and handwritten signatures executed on paper (part 11). The preamble to part 11 stated that the agency anticipated issuing supplemental guidance documents and would afford all interested parties the opportunity to comment on draft guidance documents.

The draft guidance addresses issues pertaining to computer generated time stamps in computer systems used to create, modify, maintain, archive, retrieve, or transmit electronic records and electronic signatures subject to part 11. Part 11 requires persons subject to the regulation to implement time stamps in audit trails and signature manifestations, and the draft guidance is intended to assist people who must meet this requirement; it may also assist FDA staff who apply part 11 to persons subject to the regulation.

The draft guidance provides specific information on key principles and practices, and it addresses some frequently asked questions. However, it is not intended to cover every aspect of time stamps.

This level 1 draft guidance is being issued consistent with FDA's good guidance practices regulation (21 CFR 10.115). This draft guidance, when finalized, will represent the agency's current thinking on computer generated time stamps used in computer systems subject to part 11. It does not create or confer any rights for or on any person and does not operate to bind FDA or the public. An alternative approach may be used if such approach satisfies the requirements of the applicable statutes and regulations.

II. Comments

Interested persons may submit to the Dockets Management Branch (address above) written or electronic comments on the draft guidance. Two copies of any comments are to be submitted, except that individuals may submit one copy. Comments are to be identified with the docket number found in brackets in the heading of this document. A copy of the draft guidance and received comments are available for public examination in the Dockets Management Branch between 9 a.m. and 4 p.m., Monday through Friday.

III. Electronic Access

Persons with access to the Internet may obtain the document at http://www.fda.gov/ora/compliance_ref/Part11/default.htm.

Dated: March 12, 2002.

Margaret M. Dotzel,

Associate Commissioner for Policy.

[FR Doc. 02–6623 Filed 3–19–02; 8:45 am]

BILLING CODE 4160–01–S

DEPARTMENT OF HEALTH AND HUMAN SERVICES

Health Resources and Services Administration

Availability of Funds for Grants for the Community Access Program

AGENCY: Health Resources and Services Administration, HHS.

ACTION: Notice of availability of funds.

SUMMARY: The Health Resources and Services Administration (HRSA) announces the availability of funding to assist communities and their safety net providers in developing integrated health care delivery systems that serve the uninsured and underinsured with greater efficiency and improved quality of care. This funding is part of the $105 million appropriated for the Community Access Program (CAP) under the fiscal year 2002 Health and Human Services Appropriations Act. Up to $20 million will be available as 1-year CAP grants with the possibility of supplemental funding depending on performance and funding availability. Current annual awards to communities average about $900,000 per award, and range from approximately $150,000 to $1.2 million. Applicants are encouraged to propose total budgets in this range.

The purpose of this program is to assist communities and consortia of health care providers, faith-based organizations and others to support the infrastructure necessary to fully develop or strengthen integrated health systems of care that coordinate health services for the uninsured and underinsured. The goals are to increase access to care, generate system-wide efficiency and cost savings, and improve health in targeted populations. The coordination of services through the CAP grant will allow the uninsured and underinsured to receive more efficient and higher quality care and gain entry into a comprehensive system of care. The system will be characterized by effective collaboration, information sharing, and clinical and financial coordination among all levels of care in the community network.

DATES: The timeline for application submission, review and award is as follows:

Application kits and additional guidance are available through the HRSA Grants Application Center (GAC).

May 7, 2002—Applications due.
June–2002—Applications reviewed.
July–August—Site visits to selected applicants.
September 2002—Grant awards announced.

ADDRESSES: To receive a complete application kit (i.e., application instructions, necessary forms, and application review criteria), contact the HRSA GAC at:

Health Resources and Services Administration Grants Application Center COMMUNITY ACCESS PROGRAM: CFDA #93.252, 901 Russell Avenue, Suite 450, Gaithersburg, MD 20879, Phone: 1–877—HRSA–123, Fax: 1–877–HRSA–345. E-mail: *hrsagac@hrsa.gov*.

FOR FURTHER INFORMATION CONTACT: Community Access Program Office, Health Resources and Services Administration, 4350 East West Highway, 3rd Floor, Bethesda, Maryland 20854, Phone: 301–443–0536, Fax: 301–443–0248. E-mail: *capcentral@hrsa.gov*.

SUPPLEMENTARY INFORMATION:

Program Description

The program has been in existence since FY 2000 with 136 projects funded to date. Many communities supported by earlier grants have already taken action to meet the health needs of all their residents. There are many exciting, dynamic models. Each of the existing CAP communities has created a project that addresses its own needs. We are interested in funding new communities that plan to generate better health for more people at less cost.

There is no one successful model that we are trying to replicate. Some successful communities:

- Have a project design that builds on its current capacities and strengths.
- Build coalitions that include the major players in the political and health delivery systems.
- Use Federal funds to plan a transition to an expanded approach that will be competitive within its own market.
- Have a plan for sustainability after Federal funds expire.
- Have a coalition that works with its county board, city council, State legislature and State health programs to ensure coordination and efficient use of all available resources.

CAP requires a coalition/collaboration of partners that includes primary, secondary and preventive care. The coalition/collaboration should include the providers of safety net services who currently serve the community. Many existing CAP coalitions have:

- Coordinated the provision of care through public hospitals, public health departments, and Federally Qualified Health Centers and existing other federally funded programs like Healthy Start and Ryan White;
- Included a strong linkage with social service organizations and faith-based programs.
- Linked hospital and clinic services using state of the art information technology.
- Developed management systems that allow transitions between Medicaid, uninsured, and insured status for low income populations to reduce administrative burden on providers.
- Created networks to ensure a primary care home for uninsured persons and distributed the caseloads among all providers.
- Linked mental health and substance abuse services to primary care.
- Ensured partnership with the local business community.
- Addressed service gaps by expanding health centers.

Although there are many models emerging, these are not really common characteristics but are ''issues frequently addressed.'' They are:

- Common enrollment systems.
- Standardized financial eligibility.
- Agreement about sliding fee scales.
- Coordination of services among providers.
- Ensured primary care or medical homes.
- Provision of specialty services.
- Automated appointment systems.
- Case management services.
- Strategies for affordable pharmaceutical services.
- Disease management programs across the array of community providers.
- Outreach to hard-to-enroll populations.
- Information systems to implement the desired strategies.
- Included use of local taxing authorities and redirected funds within the system to provide for sustainability.

These communities are demonstrating that these changes are possible and they are reporting the results of their efforts across the Nation. They are communities with clear goals, an operational plan for meeting these goals, a history of commitment to serving indigent populations, and a track record to indicate a reasonable chance of success.

Eligible Applicants

To encourage the development of different models, this program seeks a variety of applicants representing all types of communities. Applicants who receive funding may be large health care systems or small organizations. Applications are encouraged from urban areas, rural communities, tribal organizations, and faith-based communities.

Applications may be submitted by public and private non-profit entities that demonstrate a commitment to and experience with providing a coordinated continuum of care to uninsured individuals. Each applicant must represent a community-wide coalition that is committed to the project and includes safety net providers (where they exist) who have traditionally provided care to the community's uninsured and underinsured regardless of ability to pay. The community-wide coalition must consist of partners from all levels of care and partners who represent a range of services (*e.g.,* mental health and substance abuse treatment, maternal and child health care, oral health, HIV/AIDS care) to a wide variety of populations. Coalitions are encouraged to include partners from private industry, faith-based organizations, and other organizations within communities.

Examples of eligible applicants which may apply on behalf of the community-wide coalition include, but are not limited to:

- A consortium or network of providers (*e.g.*, public and charitable hospitals; community, migrant, homeless, public housing, and school-based health centers; rural health clinics; free health clinics; teaching hospitals and academic institutions).
- Local government agencies (*e.g.*, local public health departments with service delivery components).
- Tribal governments.
- Managed care plans or other payers (*e.g.*, HMOs).
- Agencies of State government, multi-State health systems, or other groups may submit applications on behalf of multiple communities if they demonstrate the ability to coordinate community health care delivery systems and bring resources to the community.

Existing CAP grantees are not eligible to apply for this funding.

Application Review and Funding Criteria

Each of the applications that has passed an eligibility and conformance review by Federal staff will be assigned to members of an Objective Review Committee (ORC) for review. Members of the ORC will use the following evaluation criteria in their review of applications:

1. *Community Needs Assessment*—Evidence that the target population has significant need (20 Points).
2. *Business Plan to Produce Defined Results*—Clarity and scope of projected results in terms of increased access to culturally competent care and/or health status for the target population, and alignment of these projected results with organizational capacity, a clear and accountable set of activities, operational plan and budget (30 Points).
3. *Service Integration Strategy & Readiness*—Integration of appropriate health and other services across the community of providers and organizations, readiness, evidence of progress towards developing an integrated system of care for the target population, and scope and quality of services (25 Points).
4. *Sustainability*—Demonstration of existing and sustainable public or private funding sources or cost-savings to be generated and reinvested in the system of care (15 Points).
5. *Evaluation*—Robust self-evaluation plan, specific performance measures, and strong commitment to participation in a national evaluation (10 Points).

A Validation Site Visit will be conducted prior to final award decisions of those applicants recommended by the ORC for funding. Site visits are expected to occur in the July/August timeframe.

Use of Grant Funds

Funding provided through this program may NOT be used to substitute for or duplicate funds currently supporting similar activities. Grant funds may support costs such as:

- Project staff salaries.
- Consultant support.
- Management information systems (*e.g.,* hardware and software).
- Project-related travel.
- Replication activities and travel to support peer-to-peer learning communities.
- Other direct expenses necessary for the integration of administrative, clinical, information system, or financial functions.
- Program evaluation activities.
- Case management and disease management activities that are not reimbursable services.

With appropriate justification on why funds are needed to support the following costs, up to a total of 15 percent in total of grant funds applied for may be used for any combination of the following:

- Alteration or renovation of facilities.
- Primary care site development.
- Service expansions or direct patient care.

(Direct patient care is defined as provision of services or supplies that are ordinarily reimbursable, *e.g.,* exams, therapy sessions, pharmaceuticals.)

- Capital equipment used for reimbursable services (e.g., radiology equipment, ambulances).

Grant funds may NOT be used for:

- Construction.
- Reserve requirements for state insurance licensure.

Expected Results

The integration and coordination of services among a community's safety net providers are expected to result in:

- Increased access to culturally competent care in terms of measures such as: numbers of vulnerable people served, the scope and continuity of provided services, the number of new access points such as health center expansions or new sites, and other;
- Improved health status in the target population;
- A sustainable system that provides coordinated care to the target population; and,
- Elimination of unnecessary, duplicate functions in service delivery and administrative functions, resulting in cost savings to reinvest in the system.

Dated: March 12, 2002.

Elizabeth M. Duke,

Administrator.

[FR Doc. 02–6707 Filed 3–19–02; 8:45 am]

BILLING CODE 4165–15–P

DEPARTMENT OF THE INTERIOR

Fish and Wildlife Service

Notice of Intent To Issue a Final Comprehensive Conservation Plan, Associated Environmental Assessment, and Finding of No Significant Impact for Balcones Canyonlands National Wildlife Refuge in the Southwest Region

AGENCY: Fish and Wildlife Service, Interior.

ACTION: Notice.

SUMMARY: This notice advises the public that the U.S. Fish and Wildlife Service (Service) has prepared a Final Comprehensive Conservation Plan (CCP), associated Environmental Assessment (EA), and a Finding of No Significant Impact (FONSI) for the Balcones Canyonlands National Wildlife Refuge, north of Austin, Texas, pursuant to the National Wildlife Refuge System Improvement Act of 1997, and National Environmental Policy Act of 1969, and its implementing regulations. The Regional Director, Southwest Regional Office, upon issuing a FONSI, considered a reasonable range of management framework alternatives, and has selected Alternative 2, found in the EA, to be the Service's proposed alternative.

Approval of the Balcones Canyonlands NWR CCP formalizes 8 goals which will result in:

- Restoration and enhancement of threatened and endangered species habitat on Refuge lands. (Goal 1)
- Protection and enhancement of habitat for a diversity of wildlife including other migratory birds. (Goal 2)
- Restoration of watershed health to minimize sheet runoff and siltation, enhance seasonal stream flow, and maximize ground and surface water recharge. (Goal 3)
- Development of interpretive programs that enable the public to (1) enjoy the fish and wildlife resources found on the refuge, (2) understand these resources and issues related to them, and (3) act to promote fish and wildlife conservation. (Goal 4)
- Protection of habitat within approved Refuge boundaries by fee acquisition or conservation easement. (Goal 5)
- Accurate, up-to-date data on roads, other physical infrastructure, habitats and wildlife, and plant species.(Goal 6)
- Compliance with historic and archeological resource protection laws and regulations. (Goal 7)
- Efficient Administration that Supports Refuge Objectives Accomplishments. (Goal 8)

Some of the specific changes to the existing program changes include but are not necessarily limited to the following objectives:

- Restore and enhance 500 acres of black-capped vireo habitat within 10 years.
- Maintain brown-headed cowbirds parasitism on black-capped vireo nests below 10%.
- Protect existing golden-cheeked warbler habitat on Refuge lands and enhance additional areas for golden-cheeked warbler where appropriate.
- Within five years design and begin to implement a plan to locate and map caves and other karst features, monitor changes occurring in them, and take actions as needed to protect them.
- Continue to support and promote the conservation of the golden-cheeked warbler and black-capped vireo in their migration and wintering areas through coordination with Central American ornithologists and participation in the Nature Conservancy's International Program.
- Within 10 years restore and manage at least 1,000 acres of existing and former native grassland and savannah habitat on the Refuge and increase the amount and diversity of native annual and perennial grasses and forbs on the refuge.
- Within ten years, design and implement a plan to restore wetlands and riparian corridors.
- Within ten years rehabilitate and improve existing wells for wildlife water sources for public viewing sites using wind and solar power.
- Control invasive species (e.g. second-growth juniper, prickly pear and false-willow) on at least 50 acres per year to improve ground cover and plant diversity.
- Reduce the Refuge white-tailed deer herd to achieve and maintain a density of one deer per 20 or more acres within five years to reduce adverse effects on Refuge habitat.
- Maintain and increase herbarium collection and print a Refuge Plant list within three years. Identify native plant and wildlife species that are unique to the Balcones Canyonlands region for potential restoration and enhancement on the Refuge.
- Control feral, exotic and domestic animals that can compete with native wildlife and damage its habitat (e.g. dogs, cats, feral hogs, emu, etc.). Complete hog control plan within three years.
- Restore native plant growth on eroded and disturbed sites to increase water holding capacity of the soils. Restore 50 acres per year.
- Through increasing visitation to 5,000 visitors per year, provide public opportunities to view and learn about Refuge wildlife species and representative habitat characteristics of the Texas Hill Country, and to promote a conservation ethic.
- Provide compatible wildlife dependent outdoor recreational opportunities for the public on the Refuge to include wildlife viewing access, while striving for a balance between conflicting user groups. Annually evaluate hunting program to include newly acquired tracts.
- Within five years develop a public outreach program to aid in the understanding of Refuge purposes, issues specific to Balcones Canyonlands National Wildlife Refuge.
- Within five years develop a public outreach program to aid in the understanding of Refuge purposes, issues specific to Balcones Canyonlands National Wildlife Refuge.
- Within five years design and implement Partnership and Volunteer programs to facilitate meeting Refuge management objectives.
- Improve five miles of public or administrative roads per year to improve access to the Refuge for public and administrative use.
- Annually review and update the land protection plan priorities. Acquire lands according to revised priorities.
- Meet with five private owners of lands within the Refuge per year to exchange information and provide assistance on management of wildlife populations and endangered species habitat.
- Within five years map roads, inspect ponds, map and monitor Refuge habitats and species distributions.
- Within three years, create and maintain a database of Refuge biological resources for use in making management decisions and documenting changes in habitat and wildlife composition.
- Maintain files on all archeological and cultural resource sites. Annually inspect all sites and record condition.
- Within three years complete plans for implementation of objectives and strategies in this comprehensive conservation plan.
- Within five years increase Refuge staff to meet minimal needs for implementation of Refuge objectives and strategies identified in this comprehensive conservation plan.
- Conduct, encourage and support research and management studies that will increase scientific data available for use in making Refuge management decisions.
- Within five years obtain adequate equipment and storage facilities to implement management strategies to meet objectives identified in this management plan.
- Within five years plan acquisition, remodeling and/or construction of a permanent Refuge Office and Visitor Contact Station to be located on Refuge lands.

The implementation of the above management approaches among others and employment of strategies associated with those approaches should assist in the achievement of the refuge's broad goals.

Based on a review and evaluation of the information contained in the CCP and EA for the Balcones Canyonlands National Wildlife Refuge, the Regional Director, Southwest Region, U.S. Fish and Wildlife Service, has selected Alternative 2 detailed in the EA. Consequently the Regional Director has determined that the approval of the individual or cumulative approaches reflected in Alternative 2 the Proposed Alternative and CCP Goals, Objectives and Strategies, is not deemed to constitute a major Federal action which would significantly affect the quality of the human environment within the meaning of Section 102(2) (c) of the National Environmental Policy Act

(NEPA). Therefore, an Environmental Impact Statement is not required. However, it is the intent of the Service to revisit questions of potential significant environmental consequences in accordance with NEPA upon consideration of the implementation of site specific proposals called for and discussed in the final plan document.

ADDRESSES: A paper copy and/or a Compact Disk copy may be obtained by writing to: Mr. John Slown, Natural Resource Planner, Division of Refuges, U.S. Fish and Wildlife Service, P.O. Box 1306, Albuquerque, NM 87103–1306.

SUPPLEMENTARY INFORMATION: It is Service policy to have all lands within the National Wildlife Refuge System managed in accordance with an approved CCP. The CCP guides management decisions and identifies refuge goals, long-range objectives, and strategies for achieving refuge purposes. The planning process has considered many elements, including habitat and wildlife management, habitat protection and acquisition, public and recreational uses, and cultural resources. Public input into this planning process has assisted in the development of these documents. The CCP will provide other agencies and the public with a clear understanding of the desired conditions for the Refuges and how the Service will implement management strategies.

The Service considered comments and advice generated in response to draft documents issued in November 1998. The Service is furnishing this notice in compliance with Service CCP policy to advise other agencies and the public of the availability of the final documents.

Dated: March 8, 2002.

Geoffrey L. Haskett,

Acting Regional Director.

[FR Doc. 02–6768 Filed 3–19–02; 8:45 am]

BILLING CODE 4310–55–P

DEPARTMENT OF THE INTERIOR

Fish and Wildlife Service

Receipt of Applications for Permit

AGENCY: Fish and Wildlife Service, Interior.

ACTION: Notice of receipt of applications for permit.

SUMMARY: The public is invited to comment on the following applications to conduct certain activities with endangered species and/or marine mammals.

DATES: Written data, comments or requests must be received by April 19, 2002.

ADDRESSES: Documents and other information submitted with these applications are available for review, subject to the requirements of the Privacy Act and Freedom of Information Act, by any party who submits a written request for a copy of such documents within 30 days of the date of publication of this notice to: U.S. Fish and Wildlife Service, Division of Management Authority, 4401 North Fairfax Drive, Room 700, Arlington, Virginia 22203; fax 703/358–2281.

FOR FURTHER INFORMATION CONTACT: Division of Management Authority, telephone 703/358–2104.

SUPPLEMENTARY INFORMATION:

Endangered Species

The public is invited to comment on the following application(s) for a permit to conduct certain activities with endangered species. This notice is provided pursuant to Section 10(c) of the Endangered Species Act of 1973, *as amended* (16 U.S.C. 1531, *et seq.*). Written data, comments, or requests for copies of these complete applications should be submitted to the Director (address above).

Applicant: San Diego Wild Animal Park, Escondido, California, PRT–047997.

The applicant requests a permit to import one male and one female captive-born Asian wild asses (*Equus kiang holdereri = E. hemionus*) and one female captive-born Somali wild ass (*Equus africanus somalicus*) from Tierpark Berlin-Friedrichsfelde, Germany for the purpose of enhancement of the survival of the species.

Applicant: Wheeling Park Commission, Ogelbay's Good Zoo, Wheeling, WV, PRT–053684.

The applicant request a permit to acquire through interstate commerce one male captive-born Komodo monitor (*Varanus komodoensis*) for the purpose of enhancement of the survival of the species through conservation education.

Applicant: Director, Division of Law Enforcement, U.S. Fish and Wildlife Service, Arlington, Virginia, PRT–691650.

The applicant requests renewal of a permit for five years to import and export any endangered or threatened species for the explicit purpose of investigations and other law enforcement activities in order to enhance the survival of the species in the wild.

Applicant: Director, National Fish and Wildlife Forensics Laboratory, U.S. Fish and Wildlife Service, Ashland, Oregon, PRT–053639.

The applicant requests renewal of a permit for five years to import and export any endangered or threatened species for the explicit purpose of forensics activities which will directly or indirectly enhance the survival of the species in the wild.

Applicant: John Newton Walker, Dallas, TX, PRT–053503.

The applicant request a permit to import the sport-hunted trophy of one male bontebok (*Damaliscus pygargus dorcas*) culled from a captive herd maintained under the management program of the Republic of South Africa, for the purpose of enhancement of the survival of the species.

Applicant: Omaha's Henry Doorly Zoo, Omaha, NE, PRT–053363.

The applicant request a permit to import two captive-born female Bornean orangutans (*Pongo pygmaeus pygmaeus*) from the Hong Kong Zoological and Botanical Gardens, Hong Kong, for the purpose of enhancement of the survival of the species through captive propagation.

Applicant: Omaha's Henry Doorly Zoo, Omaha, NE, PRT–053606.

The applicant request a permit to import captive-born male Amur leopard (*Panthera pardus orientalis*) from Jungle Cat World, Orono, Ontario, Canada, for the purpose of enhancement of the survival of the species through captive propagation.

Marine Mammals

The public is invited to comment on the following application(s) for a permit to conduct certain activities with marine mammals. The application(s) was submitted to satisfy requirements of the Marine Mammal Protection Act of 1972, *as amended* (16 U.S.C. 1361 *et seq.*) and the regulations governing marine mammals (50 CFR 18). Written data, comments, or requests for copies of the complete applications or requests for a public hearing on these applications should be submitted to the Director (address above). Anyone requesting a hearing should give specific reasons why a hearing would be appropriate. The holding of such a hearing is at the discretion of the Director.

Applicant: John F. Wilhelm, Mill Valley, CA, PRT–053629.

The applicant requests a permit to import a polar bear (Ursus maritimus) sport hunted from the Southern Beaufort Seapolar bear population in Canada for personal use.

The U.S. Fish and Wildlife Service has information collection approval from OMB through March 31, 2004, OMB Control Number 1018–0093.

Federal Agencies may not conduct or sponsor and a person is not required to respond to a collection of information unless it displays a current valid OMB control number.

Dated: March 1, 2002.

Monica Farris,

Senior Permit Biologist, Branch of Permits, Division of Management Authority.

[FR Doc. 02–6729 Filed 3–19–02; 8:45 am]

BILLING CODE 4310–55–P

DEPARTMENT OF THE INTERIOR

Fish and Wildlife Service

Endangered Species Permit Applications

AGENCY: Fish and Wildlife Service, Interior.

ACTION: Notice of receipt of permit applications.

SUMMARY: The following applicants have applied for a scientific research permit to conduct certain activities with endangered species pursuant to section 10(a)(1)(A) of the Endangered Species Act of 1973, as amended (16 USC 1531 *et seq.*). The U.S. Fish and Wildlife Service solicits review and comment from local, State, and Federal agencies, and the public on the following permit requests.

Permit No. TE–052307

Applicant: Marck Menke, San Fransisco, California.

The applicant requests a permit to take (collect) *Eriodictyon altissimum* (Indian Knob Mountain Balm) and *Eriodictyon capitatum* (Lompoc Yerba Santa) in conjunction with evolutionary plant studies in San Luis Obispo and Santa Barbara Counties, California for the purpose of enhancing their survival.

Permit No. TE–797233

Applicant: Entomological Consulting Services, Ltd., Pleasant Hill, California.

The permittee requests a permit amendment to take (survey by pursuit) the Palos Verdes blue butterfly *(Glaucopsyche lygdamus palosverdesensis)* and the Smith's blue butterfly *(Euphilotes enoptes smithi)*, and take (harass by survey and collect) the Ohlone tiger beetle *(Cicindela ohlone)* in conjunction with life history studies in Los Angeles, Monterey, Santa Cruz, and San Luis Obispo Counties, California for the purpose of enhancing their survival.

Permit No. TE–040555

Applicant: Steven L. Jessup, Ashland, Oregon.

The applicant requests a permit to take (collect tissue samples, flowers, and leaves) *Fritillaria gentneri* (Gentner's fritillary) in conjunction with genetic plant studies in Jackson and Josephine Counties, Oregon for the purpose of enhancing its survival.

Permit No. TE–051582

Applicant: William Goggin, San Leandro, California.

The applicant requests a permit to: take (harass by survey) the California clapper rail *(Rallus longirostris obsoletus)* and the southwestern willow flycatcher *(Empidonax traillii extimus)*; and take (capture) the California tiger salamander *(Ambystoma californiense),* the California freshwater shrimp *(Syncaris pacifica),* the Alameda whipsnake *(Masticophis lateralis euryxanthus),* the salt marsh harvest mouse *(Reithrodontomys raviventris),* and the San Francisco garter snake *(Thamnophis sirtalis tetrataenia)* throughout the range of each species in conjunction with surveys for the purpose of enhancing their survival.

Permit No. TE–787484

Applicant: Kathleen M. Keane, Long Beach, California.

The permittee requests a permit amendment to take (locate and monitor nests) the California least tern *(Sterna antillarum browni)* in Santa Barbara and San Luis Obispo Counties, California in conjunction with monitoring activities for the purpose of enhancing its survival.

Permit No. TE–702631

Applicant: Regional Director, Region 1, U.S. Fish and Wildlife Service, Portland, Oregon.

The permittee requests a permit amendment to take the Carson wandering skipper *(Pseudocopaeodes eunus obscurus)* and the Columbia Basin distinct population segment of the pygmy rabbit *(Brachylagus idahoensis).* Take activities will be conducted throughout the range of the species in conjunction with recovery efforts for the purpose of enhancing their propagation and survival.

Permit No. TE–052744

Applicant: Shannon Hickey, Davis, California.

The applicant requests a permit to take (harass by survey, collect and sacrifice) the Conservancy fairy shrimp *(Branchinecta conservatio),* the longhorn fairy shrimp *(Branchinecta longiantenna),* the San Diego fairy shrimp *(Branchinecta sandiegonensis),* the vernal pool tadpole shrimp *(Lepidurus packardi),* and the Riverside fairy shrimp *(Streptocephalus wootoni)* throughout the range of each species in conjunction with surveys for the purpose of enhancing their survival.

Permit No. TE–812206

Applicant: Robin Church, La Mesa, California.

The applicant requests a permit to take (harass by survey) the southwestern willow flycatcher *(Empidonax traillii extimus)* in San Diego, Orange, and Riverside Counties, California in conjunction with surveys for the purpose of enhancing its survival.

Permit No. TE–052847

Applicant: Mike D. Taylor, Irvine, California

The applicant requests a permit to take (monitor nests) the least Bell's vireo (*Vireo bellii pusillus)* in Los Angeles, Orange, and Riverside Counties, California in conjunction with surveys for the purpose of enhancing its survival.

Permit No. TE–052953

Applicant: Oregon Department of Forestry, Salem, Oregon.

The applicant requests a permit to take (harass by survey) the Oregon chub (*Oregonichthys crameri*) in Baker, Benton, Clackamas, Crook, Deschutes, Gilliam, Grant, Lake, Lane, Linn, Hood River, Jackson, Jefferson, Klamath, Marion, Multnomah, Polk, Umatilla, Union, Wasco, Washington, Wheeler, and Yamhill Counties, Oregon in conjunction with surveys for the purpose of enhancing its survival.

Permit No. TE–052747

Applicant: Edward J. Stanton, Sun City, California.

The applicant requests a permit to take (survey by pursuit) the Quino checkerspot butterfly (*Euphydryas editha quino*) in conjunction with vegetation management activities in Riverside County, California for the purpose of enhancing its survival.

Permit No. TE–051248

Applicant: Paul M. Lemons, La Jolla, California.

The applicant requests a permit to take (survey by pursuit) the Quino checkerspot butterfly (*Euphydryas editha quino*) throughout the range of the species in conjunction with surveys for the purpose of enhancing its survival.

Permit No. TE–051250

Applicant: Kamarul Muri, Encinitas, California.

The applicant requests a permit to take (survey by pursuit) the Quino checkerspot butterfly (*Euphydryas editha quino*) throughout the range of the species in conjunction with surveys for the purpose of enhancing its survival.

Permit No. TE–051230

Applicant: Michele Balk, Encinitas, California.

The applicant requests a permit to take (survey by pursuit) the Quino checkerspot butterfly (*Euphydryas editha quino*) throughout the range of the species in conjunction with surveys for the purpose of enhancing its survival.

Permit No. TE–053020

Applicant: Andrew Pigniolo, San Diego, California.

The applicant requests a permit to take (survey by pursuit) the Quino checkerspot butterfly (*Euphydryas editha quino*) in San Diego and Riverside Counties, California, in conjunction with surveys for the purpose of enhancing its survival.

Permit No. TE–053018

Applicant: Environmental Science & Assessment, Portland, Oregon.

The applicant requests a permit to take (survey, mark, recapture) the Oregon chub (*Oregonichthys crameri*) in Marion and Linn Counties, Oregon, in conjunction with surveys for the purpose of enhancing its survival.

DATES: Written comments on these permit applications must be received within 30 days of the date of publication of this notice.

ADDRESSES: Written data or comments should be submitted to the Chief, Endangered Species, Ecological Services, Fish and Wildlife Service, 911 NE. 11th Avenue, Portland, Oregon 97232–4181; Fax: (503) 231–6243. Please refer to the respective permit number for each application when submitting comments. All comments received, including names and addresses, will become part of the official administrative record and may be made available to the public.

FOR FURTHER INFORMATION CONTACT: Documents and other information submitted with these applications are available for review, subject to the requirements of the Privacy Act and Freedom of Information Act, by any party who submits a written request for a copy of such documents within 20 days of the date of publication of this notice to the address above; telephone: (503) 231–2063. Please refer to the respective permit number for each application when requesting copies of documents.

Dated: March 24, 2002.

Rowan W. Gould,

Regional Director, Region 1, Portland, Oregon.

[FR Doc. 02–6683 Filed 3–19–02; 8:45 am]

BILLING CODE 4310–55–P

DEPARTMENT OF THE INTERIOR

Fish and Wildlife Service

Notice of Receipt of Applications for Permit

Endangered Species

The public is invited to comment on the following application(s) for a permit to conduct certain activities with endangered species. This notice is provided pursuant to Section 10(c) of the Endangered Species Act of 1973, as amended (16 U.S.C. 1531, *et seq.*). Written data, comments, or requests for copies of these complete applications should be submitted to the Director (address below) and must be received within 30 days of the date of this notice.

Applicant: Jeanne A. Mortimer/University of Florida, Gainesville, FL, PRT–811272.

The applicant requests re-issuance of a permit to import biological samples obtained from green sea turtles (*Chelonia mydas*) and hawksbill sea turtles (*Eretmochelys imbricata*) located on beaches or in waters on/around the Republic of Seychelles and Chagos Island, British Indian Ocean Territory, for scientific research. This notification covers activities conducted by the applicant over a five year period.

Applicant: Clifford G. McGehee, Jacksonville, FL, PRT–053223.

The applicant request a permit to import the sport-hunted trophy of one male bontebok (Damaliscus pygargus dorcas) culled from a captive herd maintained under the management program of the Republic of South Africa, for the purpose of enhancement of the survival of the species.

Applicant: Anthony Gioffre, Dublin, OH, PRT–053326.

The applicant request a permit to import the sport-hunted trophy of one male bontebok (Damaliscus pygargus dorcas) culled from a captive herd maintained under the management program of the Republic of South Africa, for the purpose of enhancement of the survival of the species.

Applicant: Savannah River Ecology Laboratory/University of Georgia, Aiken, SC, PRT–051521.

The applicant requests a permit to export biological samples from wood stork (*Mycteria americana*) collected in the wild in the United States, to the Universidade Federal de Sao Carlos, San Carlos, Brazil, for scientific research.

Applicant: Bonnie Ringo, Cave Junction, OR, PRT–049054.

The applicant requests a permit to export five captive-born white tigers (*Panthera tigris*) to the Zion Wildlife Gardens, Kerikeri, New Zealand, for the purpose of enhancement of the survival of the species.

Documents and other information submitted with these applications are available for review, subject to the requirements of the Privacy Act and Freedom of Information Act, by any party who submits a written request for a copy of such documents within 30 days of the date of publication of this notice to: U.S. Fish and Wildlife Service, Division of Management Authority, 4401 North Fairfax Drive, Room 700, Arlington, Virginia 22203, telephone 703/358–2104 or fax 703/358–2281.

Dated: February 22, 2002.

Michael S. Moore,

Senior Permit Biologist, Branch of Permits, Division of Management Authority.

[FR Doc. 02–6731 Filed 3–19–02; 8:45 am]

BILLING CODE 4310–55–P

DEPARTMENT OF THE INTERIOR

Fish and Wildlife Service

Endangered and Threatened Wildlife and Plants; Status of the Rio Grande Cutthroat Trout

AGENCY: Fish and Wildlife Service, Interior.

ACTION: Re-opening of the comment period for the Rio Grande cutthroat trout candidate status review.

SUMMARY: We, the U.S. Fish and Wildlife Service (Service) announce a re-opening of the comment period for the candidate status review for the Rio Grande cutthroat trout (*Oncorhynchus clarki virginalis*). We are re-opening the comment period to allow interested parties additional time to submit information to us for our consideration in determining whether the Rio Grande cutthroat trout should be a candidate for listing. On December 28, 2001 (66 FR 67289), we published a notice opening a comment period to obtain information on the status of the Rio Grande Cutthroat Trout. That comment period

closed on February 26, 2002. On or before June 4, 2002, we will make a determination concerning the results of this review for the Rio Grande cutthroat trout and, shortly thereafter, we will publish this determination in the **Federal Register**. We will accept information at any time on the status of the Rio Grande cutthroat trout; however, information must be received by March 29, 2002, in order for us to be able to consider it in our June 4, 2002, determination of candidate status.

DATES: Comments and information from all interested parties for our use in the status review will be accepted until March 29, 2002.

ADDRESSES: Questions and comments concerning this status review should be sent to Joy Nicholopoulos, Field Supervisor, U.S. Fish and Wildlife Service, 2105 Osuna Rd. NE, Albuquerque, NM 87113. Comments and materials received will be available on request for public inspection, by appointment, during normal business hours at the above address.

FOR FURTHER INFORMATION CONTACT: Joy Nicholopoulos, Field Supervisor, (see **ADDRESSES** section), telephone (505) 346–2525.

SUPPLEMENTARY INFORMATION:

Background

On February 25, 1998, we received a petition from Kieran Suckling, of the Southwest Center for Biological Diversity requesting that the Service add the Rio Grande cutthroat trout (*Onchorynchus clarki virginalis*) to the list of threatened and endangered species. The petition addressed the range-wide distribution of the Rio Grande cutthroat trout that included populations in Colorado and New Mexico.

The Rio Grande cutthroat trout is the southernmost of 14 subspecies of cutthroat trout (Behnke 1967, 1972, 1992; Sublette *et al.* 1990). There are two phenotypic forms of the subspecies, one in the Rio Grande and one in the Pecos River (Behnke 1992). The species derives its name from the distinctive red or orange slashes beneath the lower jaw. The general body coloration is yellowish green to grayish brown; the abdomen is creamy white. Variably-sized black spots cover the upper body and are more numerous posteriorly; dorsal, adipose, and caudal fins carry black spots (Koster 1957, Behnke 1992, Sublette et al. 1990). Although the historical distribution of the Rio Grande cutthroat trout is not known with certainty, it is likely that the subspecies occurred not only in all waters in the upper Rio Grande, Pecos, and Canadian River Basins that are currently capable of supporting trout, but also in other stream reaches within these watersheds that formerly provided the habitat requisites of coldwater species.

Section 4(b)(3)(B) of the Act requires that we make a finding on whether a petition to list, delist or reclassify a species presents substantial scientific or commercial information indicating that the petitioned action is—(a) not warranted; (b) warranted; or (c) warranted but precluded from immediate proposal by other pending listing proposals of higher priority. We subsequently published a notice of a 90-day finding in the **Federal Register** (63 FR 49062) on September 14, 1998. In the 90-day finding we concluded that the petition did not present substantial information indicating that listing of the Rio Grande cutthroat trout may be warranted.

Our finding recognized that livestock grazing, road construction, and logging were primary factors in the constriction of the Rio Grande cutthroat trout's historical range, and continue to impact streams and riparian habitats where measures to limit those impacts are lacking. The Service concluded that the management objectives of both States, set forth in respective management plans formulated for the Rio Grande cutthroat, would provide for the continued management, conservation, and stability of this subspecies and its habitats.

On June 9, 1999, a complaint was filed by the Southwest Center for Biological Diversity challenging the September 14, 1998, 90-day petition finding as violating the Act and the Administrative Procedures Act. Recently, while the litigation was pending, we received some information (particularly related to the presence of whirling disease in hatchery fish and in the wild) that led us to believe that further review of the status of the species was warranted.

On November 8, 2001, a settlement agreement executed by both parties (the Service and the Southwest Center for Biological Diversity) was filed with the court. The settlement stipulates that we will initiate a candidate status review for the Rio Grande cutthroat trout. The settlement also stipulates that on or before June 4, 2002, we will make a determination concerning the results of this review and, shortly thereafter, we will publish our determination in the **Federal Register**. The agreement also states that we will not vacate our previous determination in the interim.

Request for Information

Our determination of candidate status for the Rio Grande cutthroat trout shall be based upon the best available scientific and commercial data, as required under section 4(b)(1)(A) of the Act. We request you submit any further information on the Rio Grande cutthroat trout. We are particularly interested in any information concerning the following:

(1) Current population numbers and trends for each of the populations of the Rio Grande cutthroat trout;

(2) Whether there are documented increases in those populations or their habitat;

(3) The status of remaining habitat areas;

(4) The current threats and future threats to those populations and remaining habitat areas; and

(5) Other regulatory mechanisms that address those threats; and the success of those mechanisms to date.

References Cited

A complete list of all references cited is available upon request from the New Mexico Ecological Services Field Office (see **ADDRESSES** section).

Author

The primary author of this document is New Mexico Ecological Services Field Office staff (see **ADDRESSES** section).

Authority

The authority for this action is section 4(b)(1)(A) of the Endangered Species Act, 16 U.S.C. 1533.

Dated: February 28, 2002.

Pat A. Langley,

Acting Regional Director.

[FR Doc. 02–6682 Filed 3–19–02; 8:45 am]

BILLING CODE 4310–55–P

DEPARTMENT OF THE INTERIOR

Fish and Wildlife Service

Issuance of Permit for Marine Mammals

AGENCY: Fish and Wildlife Service, Interior.

ACTION: Notice of issuance of permit for marine mammals.

SUMMARY: The following permit was issued.

ADDRESSES: Documents and other information submitted for these applications are available for review by any party who submits a written request to the U.S. Fish and Wildlife Service, Division of Management Authority, 4401 North Fairfax Drive, Room 700,

Arlington, Virginia 22203; fax (703) 358–2281.

FOR FURTHER INFORMATION CONTACT: Division of Management Authority, telephone 703/358–2104.

SUPPLEMENTARY INFORMATION:

On December 17, 2001, a notice was published in the **Federal Register** (66 FR 64986), that an application had been filed with the Fish and Wildlife Service by Jeffrey L. Meyerl for a permit (PRT–050657) to import one polar bear taken from the Lancaster Sound population, Canada, for personal use.

Notice is hereby given that on February 19, 2002, as authorized by the provisions of the Marine Mammal Protection Act of 1972, *as amended* (16 U.S.C. 1361 *et seq.*) the Fish and Wildlife Service authorized the requested permit subject to certain conditions set forth therein.

Dated: March 1, 2002.

Monica Farris,

Senior Permit Biologist, Branch of Permits, Division of Management Authority.

[FR Doc. 02–6728 Filed 3–19–02; 8:45 am]

BILLING CODE 4310–55–P

DEPARTMENT OF THE INTERIOR

Fish and Wildlife Service

Notice of Issuance of Permit for Marine Mammals

On October 31, 2001, a notice was published in the **Federal Register** (66 FR 55003), that an application had been filed with the Fish and Wildlife Service by The Newark Museum for a permit (PRT–042580) to import one polar bear skin (as a full mount) and skull taken from the Southern Beaufort Sea population, Canada, for public display.

Notice is hereby given that on February 12, 2002, as authorized by the provisions of the Marine Mammal Protection Act of 1972, *as amended* (16 U.S.C. 1361 *et seq.*) the Fish and Wildlife Service authorized the requested permit subject to certain conditions set forth therein.

On November 15, 2001, a notice was published in the **Federal Register** (66 FR 57474), that an application had been filed with the Fish and Wildlife Service by Sherman J. Silber, MD for a permit (PRT–049529) to import one polar bear taken from the Lancaster Sound population, Canada, for personal use. The notice mistakenly omitted that the trophy was taken prior to April 30, 1994.

Notice is hereby given that on February 4, 2002, as authorized by the provisions of the Marine Mammal Protection Act of 1972, *as amended* (16 U.S.C. 1361 *et seq.*) the Fish and Wildlife Service authorized the requested permit subject to certain conditions set forth therein.

Documents and other information submitted for these applications are available for review by any party who submits a written request to the U.S. Fish and Wildlife Service, Division of Management Authority, 4401 North Fairfax Drive, Room 700, Arlington, Virginia 22203, telephone (703) 358–2104 or fax (703) 358–2281.

Dated: February 22, 2002.

Michael S. Moore,

Senior Permit Biologist, Branch of Permits, Division of Management Authority.

[FR Doc. 02–6730 Filed 3–19–02; 8:45 am]

BILLING CODE 4310–55–P

DEPARTMENT OF THE INTERIOR

Fish and Wildlife Service

Battle of Midway National Memorial Advisory Committee; Meeting Notice

AGENCY: Fish and Wildlife Service, Interior.

ACTION: Notice of meeting.

SUMMARY: The Battle of Midway National Memorial Advisory Committee will hold its first meeting by teleconference on Thursday, April 4, 2002, from 2:00 p.m. to 4:00 p.m. Eastern Standard Time. During this teleconference, the committee will review its purpose as identified by Congress and the Secretary of the Interior, a list of objectives for the committee will be developed, and planning for the 60th anniversary celebration of the Battle of Midway will be initiated. A portion of the meeting will focus on the organization and functioning of a Federal Advisory Committee.

DATES: April 4, 2002, 2:00 p.m. to 4:00 p.m.

ADDRESSES: U.S. Fish and Wildlife Service, 4401 N. Fairfax Drive, Arlington, Virginia, room 500 or by teleconference.

FOR FURTHER INFORMATION CONTACT: Any member of the public wishing further information concerning the meeting or who wishes to submit oral or written comments should contact Barbara Maxfield, External Affairs Chief for the Fish and Wildlife Service's Pacific Islands Office, Box 50088, Honolulu, HI 96850; telephone (808) 541–2749; fax (808) 541–2756 no later than February 15, 2002. You may obtain copies of the draft meeting agenda from the same source.

SUPPLEMENTARY INFORMATION: As directed by Congress, the Secretary of the Interior established the Battle of Midway National Memorial Advisory Committee to facilitate development of a strategy for the dedication and management of this National Memorial. Members of the public are welcome to participate in any of its meetings.

Members of the public in the Washington, DC, area may attend the meeting in person in the U.S. Fish and Wildlife Service's Washington Office at 4401 N. Fairfax Drive, Arlington, Virginia, in room 500. Members of the public may also participate by teleconference, however, teleconference lines are limited. Please call Barbara Maxfield (808) 541–2749 if you are interested in participating in the call and to obtain the dial-in number. Seating in room 500 of the Fish and Wildlife Service's Arlington Square office is limited and is available on a first come, first served basis.

We will distribute written comments submitted to the Fish and Wildlife Service at the Honolulu address above to committee members prior to the meeting if we receive them in sufficient time to allow distribution. We will provide an opportunity for oral comments from the public during this teleconference meeting as well.

Dated: February 19, 2002.

Jerry F. Leinecke,

Project Leader, Hawaiian and Pacific Islands National Wildlife Refuge Complex.

[FR Doc. 02–6734 Filed 3–19–02; 8:45 am]

BILLING CODE 4310–55–P

DEPARTMENT OF THE INTERIOR

Bureau of Indian Affairs

Navajo Nation Liquor Ordinance

AGENCY: Bureau of Indian Affairs, Interior.

ACTION: Notice.

SUMMARY: This notice publishes the Navajo Nation Liquor Ordinance. The Ordinance is enacted as an amendment to the Navajo Nation Code § 412. The Ordinance regulates the control, possession, and sale of liquor on the Navajo Nation Indian trust lands, in conformity with the laws of the State of Arizona, where applicable and necessary. Although the Ordinance was adopted on July 20, 2001, it does not become effective until published in the **Federal Register** because the failure to comply with the Ordinance may result in criminal charges.

DATES: This Ordinance is effective on March 20, 2002.

FOR FURTHER INFORMATION CONTACT: Kaye Armstrong, Office of Tribal Services, 1849 C Street, NW., MS 4631–MIB, Washington, DC 20240–4001; telephone (202) 208–4400.

SUPPLEMENTARY INFORMATION: Pursuant to the Act of August 15, 1953, Public Law 83–277, 67 Stat. 586, 18 U.S.C. 1161, as interpreted by the Supreme Court in *Rice* v. *Rehner*, 463 U.S. 713 (1983), the Secretary of the Interior shall certify and publish in the **Federal Register** notice of adopted liquor ordinances for the purpose of regulating liquor transaction in Indian country. The Navajo Nation Liquor Ordinance, which amends the Navajo Nation Code § 412, as authorized by Resolution No. CJY–62–01, was duly adopted by the Navajo Nation Council on July 20, 2001. The Navajo Nation, in furtherance of its economic and social goals, has taken positive steps to regulate retail sales of alcohol and use revenues to combat alcohol abuse and its debilitating effects among individuals and family members within the Navajo Nation.

This notice is published in accordance with the authority delegated by the Secretary of the Interior to the Assistant Secretary—Indian Affairs by 209 Departmental Manual 8.1.

I certify that by Resolution No. CJY–62–01, the Navajo Nation Liquor Ordinance, amending the Navajo Nation Code § 412, was duly adopted by the Navajo Nation Council on July 20, 2001.

Dated: March 11, 2002.

Neal A. McCaleb,

Assistant Secretary—Indian Affairs.

The Navajo Nation Liquor Ordinance, amending the Navajo Nation Code § 412, reads as follows:

Amendment to Navajo Nation Code § 412

1. The Navajo Nation Council hereby amends 17 N.N.C. § 412 in the following manner:

(c) It shall not be unlawful for any person, Indian or non-Indian, to sell, deliver, transport or consume intoxicating liquor in that part of the Navajo Nation covered by the Antelope Point Resort and Marina Business Site Lease provided that the transportation, sale, delivery and consumption of alcoholic beverages is in conformity with applicable state regulatory liquor law, specifically excluding any state regulatory liquor laws which would require the Navajo Nation and/or its Lessee to be licensed by the State of Arizona, or to be in any way subject to the administrative, executive, judicial or legislative jurisdiction of the State of Arizona, and that all sales of alcoholic beverages be at prices no less than the prices charged for similar products in adjoining areas of the State of Arizona. The Economic Development Committee of the Navajo Nation Council is hereby authorized to approve such rules and regulations as are necessary and appropriate to ensure the proper transportation, sale, delivery and consumption of alcoholic beverages within the area of the Antelope Point Business Site Lease.

2. The Navajo Nation Council further stipulates that at the end of the term of the Antelope Point Resort and Marina Business Site Lease, and any options granted thereto, this legislation shall be subject to review and reauthorization by the Navajo Nation Council.

[FR Doc. 02–6738 Filed 3–19–02; 8:45 am]

BILLING CODE 4310–04–P

DEPARTMENT OF THE INTERIOR

National Park Service

CORRECTION—Notice of Inventory Completion for Native American Human Remains and Associated Funerary Objects in the Possession of the U.S. Department of the Interior, National Park Service, Effigy Mounds National Monument, Harpers Ferry, IA

AGENCY: National Park Service, Interior

ACTION: Correction

Notice is hereby given in accordance with provisions of the Native American Graves Protection and Repatriation Act (NAGPRA), 43 CFR 10.9, of the completion of an inventory of human remains and associated funerary objects in the possession of the U.S. Department of the Interior, National Park Service, Effigy Mounds National Monument, Harpers Ferry, IA.

This notice is published as part of the National Park Service's administrative responsibilities under NAGPRA, 43 CFR 10.2 (c). The determinations within this notice are the sole responsibility of the National Park Service unit that has control or possession of these Native American human remains and associated funerary objects. The Assistant Director, Cultural Resources Stewardship and Partnerships is not responsible for the determinations within this notice.

On March 9, 2001, the National Park Service published a Notice of Inventory Completion in the Federal Register for 15 Native American human remains and 3 associated funerary objects in the possession of Effigy Mounds National Monument. The notice incorrectly listed 12 human remains and 3 associated funerary objects recovered from Mound #57 as culturally affiliated with the Iowa Tribe of Kansas and Nebraska; Iowa Tribe of Oklahoma; Otoe-Missouria Tribe of Indians, Oklahoma; Ho-Chunk Nation of Wisconsin; Winnebago Tribe of Nebraska; Upper Sioux Indian Community of the Upper Sioux Reservation, Minnesota; Shakopee Mdewakanton Sioux Community of Minnesota (Prior Lake); Lower Sioux Indian Community of Minnesota Mdewakanton Sioux Indians of the Lower Sioux Reservation in Minnesota; and Prairie Island Indian Community of Minnesota Mdewakanton Sioux Indians of the Prairie Island Reservation, Minnesota. Based on additional information, the superintendent of Effigy Mounds National Monument determined that the 12 human remains and 3 associated funerary objects recovered from Mound #57 are culturally unidentifiable.

The Notice of Inventory Completion published by Effigy Mounds National Monument on March 9, 2001 (Federal Register Document 01-5944, pages 14201-14203) is corrected as follows:

The third paragraph is deleted.

The first sentence of the ninth paragraph is corrected to read: ''Based on the above-mentioned information, the Effigy Mounds National Monument superintendent has determined that, pursuant to 43 CFR 10.2 (d)(1), the human remains listed above represent the physical remains of three individuals of Native American ancestry.''

The second sentence of the ninth paragraph is deleted.

This correction has been sent to officials of the Iowa Tribe of Kansas and Nebraska; Iowa Tribe of Oklahoma; Otoe-Missouria Tribe of Indians, Oklahoma; Ho-Chunk Nation of Wisconsin; Sac and Fox Tribe of the Mississippi in Iowa; Sac and Fox Nation of Missouri in Kansas and Nebraska; Sac and Fox Nation, Oklahoma; Winnebago Tribe of Nebraska; Upper Sioux Indian Community of the Upper Sioux Reservation, Minnesota; Shakopee Mdewakanton Sioux Community of Minnesota; Lower Sioux Indian Community of Minnesota Mdewakanton Sioux Indians of the Lower Sioux Reservation in Minnesota; and Prairie Island Indian Community of Minnesota Mdewakanton Sioux Indians of the Prairie Island Reservation, Minnesota.

Repatriation of the three other human remains listed in the March 9, 2001, Notice of Inventory Completion is not affected by this correction.

Dated: September 12, 2001

John Robbins,

Assistant Director, Cultural Resources Stewardship and Partnerships.

[FR Doc. 02–6634 Filed 3–19–01; 8:45 am]

BILLING CODE 4310–70–S

DEPARTMENT OF JUSTICE

Immigration and Naturalization Service

Agency Information Collection Activities: Proposed Collection: Comment Request

ACTION: 60-Day Notice of Information Collection Under Review; Visa Waiver Program Carrier Agreement; Form I–775.

The Department of Justice, Immigration and Naturalization Service has submitted the following information collection request for review and clearance in accordance with the Paperwork Reduction Act of 1995. The proposed information collection is published to obtain comments from the public and affected agencies. Comments are encouraged and will be accepted for sixty days until May 20, 2002.

Written comments and suggestions from the public and affected agencies concerning the proposed collection of information should address one or more of the following four points:

(1) Evaluate whether the proposed collection of information is necessary for the proper performance of the functions of the agency, including whether the information will have practical utility;

(2) Evaluate the accuracy of the agencies estimate of the burden of the proposed collection of information, including the validity of the methodology and assumptions used;

(3) Enhance the quality, utility, and clarity of the information to be collected; and

(4) Minimize the burden of the collection of information on those who are to respond, including through the use of appropriate automated, electronic, mechanical, or other technological collection techniques or other forms of information technology, e.g., permitting electronic submission of responses.

Overview of this information collection:

(1) *Type of Information Collection:* Revision of a currently approved collection.

(2) *Title of the Form/Collection:* Visa Waiver Program Carrier Agreement.

(3) *Agency form number, if any, and the applicable component of the Department of Justice sponsoring the collection:* Form I–775. Inspections Division, Immigration and Naturalization Service.

(4) *Affected public who will be asked or required to respond, as well as a brief abstract:* Primary: Business or other for-profit. The agreement between a transportation company and the United States is needed to ensure that the transportation company will remain responsible for the aliens it transports to the United States under the Visa Waiver Program.

(5) *An estimate of the total number of respondents and the amount of time estimated for an average respondent to respond:* 400 responses at 2 hours per response.

(6) *An estimate of the total public burden (in hours) associated with the collection:* 800 annual burden hours.

If you have additional comments, suggestions, or need a copy of the proposed information collection instrument with instructions, or additional information, please contact Richard A. Sloan 202–514–3291, Director, Regulations and Forms Services Division, Immigration and Naturalization Service, U.S. Department of Justice, Room 4034, 425 I Street, NW., Washington, DC 20536. Additionally, comments and/or suggestions regarding the item(s) contained in this notice, especially regarding the estimated public burden and associated response time may also be directed to Mr. Richard A. Sloan.

If additional information is required contact: Mr. Robert B. Briggs, Clearance Officer, United States Department of Justice, Information Management and Security Staff, Justice Management Division, 601 D Street, NW., Patrick Henry Building, Suite 1600, Washington, DC 20530.

Dated: March 14, 2002.

Richard A. Sloan,

Department Clearance Officer, United States Department of Justice, Immigration and Naturalization Service.

[FR Doc. 02–6717 Filed 3–19–02; 8:45 am]

BILLING CODE 4410–10–M

DEPARTMENT OF JUSTICE

Office of Justice Programs

[OJP–1402]

Meeting of the Public Safety Officer Medal of Valor Review Board

AGENCY: Office of Justice Programs, Justice.

ACTION: Notice of meeting.

SUMMARY: This is the initial meeting of the Public Safety Officer Medal of Valor Review Board. This Board is charged with recommending recipients of the Public Safety Officer Medal of Valor, the highest national award for valor by a public safety officer. The purpose of this meeting is to conduct preliminary business of the Board.

DATES: The meeting will be held on Tuesday, March 26, 2002, at 10 a.m.

ADDRESSES: The meeting will be held in the Assistant Attorney General's Conference Room (Room 6403), Office of Justice Programs, 810 7th Street, NW., Washington, DC 20531.

FOR FURTHER INFORMATION CONTACT: Tracy A. Henke, Principal Deputy Assistant Attorney General, Office of Justice Programs, 810 7th Street, NW., Washington, DC, 20531; Telephone: 202–307–5933. [This is not a toll-free number.]

SUPPLEMENTARY INFORMATION: The Public Safety Officer Medal of Valor Review Board is authorized to carry out its advisory function under 42 U.S.C. section 15202. (42 U.S.C. section 15201 authorizes the President to award the Public Safety Officer Medal of Valor, the highest national award for valor by a public safety officer.)

This meeting will be open to the public.

Deborah J. Daniels,

Assistant Attorney General, Office of Justice Programs.

[FR Doc. 02–6639 Filed 3–19–02; 8:45 am]

BILLING CODE 4410–18–P

DEPARTMENT OF JUSTICE

Office of Justice Programs

[OJP(OJJDP)–1401]

Office of Juvenile Justice and Delinquency Prevention: Meeting of the Coalition of Juvenile Justice

AGENCY: Office of Justice Programs, Office of Juvenile Justice and Delinquency Prevention, Justice.

ACTION: Notice of meeting.

SUMMARY: The Office of Juvenile Justice and Delinquency Prevention is announcing the meeting of the Coalition for Juvenile Justice. The purpose of this meeting is to discuss and adopt recommendations from members regarding the committee's responsibility to advise the OJJDP Administrator, the President, and the Congress about state perspectives on the operation of OJJDP and Federal legislation pertaining to juvenile justice and delinquency prevention.

DATES: The meeting dates are:

1. Thursday, April 18, 2002, 10 a.m. to 6 p.m. (ET).
2. Friday, April 19, 2002, 8 a.m. to 5 p.m. (ET).
3. Saturday, April 20, 2002, 8 a.m. to 5 p.m. (ET)
4. Sunday, April 21, 2002, 8 a.m. to 5 p.m. (ET).

ADDRESSES: All meetings will be held at the Wyndham Hotel, 1400 M Street NW., Washington, DC 20005; Telephone: 202–429–1700; Fax: 202–728–0530.

FOR FURTHER INFORMATION CONTACT: For information about how to attend this meeting (or to submit written questions (optional)), contact Freida Thomas, 810 7th Street, NW., Washington, DC 20531; Telephone: 202–307–5924 [This is not a toll-free number]; Fax: 202–307–2819; E-mail: *Freida@ojp.usdoj.gov.*

SUPPLEMENTARY INFORMATION: The Coalition of Juvenile Justice, established pursuant to section 9 of the Federal Advisory Committee Act, (5 U.S.C. App. II), is meeting to carry out its advisory functions under section 5601 of the Juvenile Justice and Delinquency Prevention Act of 1974, 42 U.S.C., as amended.

This meeting will be open to the public.

Dated: March 14, 2002.

Terrence S. Donahue,

Acting Administrator, Office of Juvenile Justice and Delinquency Prevention.

[FR Doc. 02–6638 Filed 3–19–02; 8:45 am]

BILLING CODE 4410–18–P

DEPARTMENT OF LABOR

Employment and Training Administration

Notice of Determinations Regarding Eligibility to Apply for Worker Adjustment Assistance and NAFTA Transitional Adjustment Assistance

In accordance with section 223 of the Trade Act of 1974, as amended, the Department of Labor herein presents summaries of determinations regarding eligibility to apply for trade adjustment assistance for workers (TA–W) issued during the period of February, 2002.

In order for an affirmative determination to be made and a certification of eligibility to apply for worker adjustment assistance to be issued, each of the group eligibility requirements of section 222 of the Act must be met:

(1) That a significant number or proportion of the workers in the workers' firm, or an appropriate subdivision thereof have become totally or partially separated,

(2) That sales or production, or both, of the firm or subdivision have decreased absolutely, and

(3) That increases of imports of articles like or directly competitive with articles produced by the firm or appropriate subdivision have contributed importantly to the separations, or threat thereof, and to the absolute decline in sales or production.

Negative Determinations for Worker Adjustment Assistance

In each of the following cases the investigation revealed that criterion (3) has not been met. A survey of customers indicated that increased imports did not contribute importantly to worker separations at the firm.

TA–W–39,624; Nedec America Corp./ Power General, Canton, MA
TA–W–40,362; American Tissue Mills of Maine, Augusta, ME
TA–W–40,434; Imperial Carbide, Inc., Meadville, PA
TA–W–40,583; Mocaro Dyeing and Finishing, Inc., Statesville, NC
TA–W–40,704; Texfi Industries, Inc., Jefferson, GA
TA–W–40,597; Huhtamaki Food Service Div. Formerly Known as Packaging Mt. Carmel, PA
TA–W–40,750; Meridian Automotive Systems, Portland, OR
TA–W–40,804 & A; Cabinet Works LLC, Jefferson City, TN and Distinctive Woodworks LLC, Jefferson City, TN
TA–W–40,718; Bilco Manufacturing Corp., Macon, GA
TA–W–40,174; Diamond Tool and Die, Townville, PA
TA–W–39,422; Leatex Chemical Co., Philadelphia, PA

In the following cases, the investigation revealed that the criteria for eligibility have not been met for the reasons specified.

Increased imports did not contribute importantly to worker separations at the firm.

TA–W–40,870; Porex Technologies, Porous Products Group, A Div. Of Webmd Corp., College Point, NY
TA–W–40,809; Cascade General, Inc., Portland, OR
TA–W–39,704 Trico Products Corp., Buffalo, NY
TA–W–39,829; Acme Pattern Works, Inc., Chicago Heights, IL
TA–W–39,989; Crouse-Hinds, Div. Of Cooper Industries, Inc., Syracuse, NY
TA–W–40,135; GKN Aerospace North America, Carson, CA
TA–W–40,695; Nolato Shieldmate, Inc., Ilasca, IL
TA–W–40,721; Englehard Corp., McIntyre, GA
TA–W–40,765; Becton Dickinson, Hancock, NY

The workers firm does not produce an article as required for certification under section 222 of the Trade Act of 1974.

TA–W–40,770; Tree Machine Tools, Inc., Franklin, WI
TA–W–40,812; GeoComm Corp., El Paso, TX

The investigation revealed that criteria (2) has not been met. Sales or production did not decline during the relevant period as required for certification.

TA–W–40,443; James Hamilton Construction Co., Employed at Chico Mines Project, Silver City, NM

Affirmative Determinations for Worker Adjustment Assistance

The following certifications have been issued; the date following the company name and location of each determination references the impact date for all workers of such determination.

TA–W–40,573; Nortel Networks, Bohemia, NY: November 7, 2000.
TA–W–40,754; Molycorp, Inc., A Subsidiary of Unocal, Washington, PA: January 21, 2001
TA–W–39,735; Atchison Products, Inc., Boonville, MO: June 14, 2000.
TA–W–39,748; Engel Machinery, Inc., York, PA: August 6, 2000.
TA–W–40,037; Glad Rags, Inc., Buchanan, VA: August 31, 2000.
TA–W–40,106; Haskell—Senator International, Verona, PA: September 7, 2000.
TA–W–40,192; Camoplast Accufab, Inc., A Div. Of Camoplast, Ltd, Chillicothe, OH: September 26, 2000.
TA–W–40,284; The Carbide/Graphite Group, Inc., Niagara Falls, NY: September 24, 2000.
TA–W–40,308; Nachi Machining Technology Co., Machine Department, Macomb, MI: October 15, 2000.
TA–W–40,372; Square D Company, Schneider Electric North America, Middletown, OH: November 15, 2000.
TA–W–40,374; Osan Manufacturing, Boyertown, PA: November 16, 2000.
TA–W–40,705; ITT Industries, Newton, MA: December 18, 2000.
TA–W–40,463; Dunham-Bush, Inc., Harrisonburg, VA: October 31, 2000.
TA–W–40,500; Swift Spinning Mills, Inc., Marubeni Denim Div., Columbus, GA: December 19, 2000.
TA–W–40,561; Thermal Industries, Inc., Vinylium Corp., Pittsburgh, PA: October 19, 2000.

TA–W–40,722; Willow Creek Apparel, Inc., Jonesville, NC: January 7, 2001.
TA–W–40,783; Intertape Polymer Group, Inc., Central Products Company, Richmond, KY: December 21, 2000.
TA–W–40,841: FCI USA, Inc., Emigsville, PA: January 7, 2001.
TA–W–40,713; SDS Lumber Co., Plywood Div., Bingen, WA: January 9, 2001.
TA–W–40,618; Acordis Industrial Fibers, Inc., Scottsboro, AL: November 30, 2000.
TA–W–40,559; Maysville Garment, Inc., Maysville, NC: December 8, 2000.
TA–W–40,542; Vision Metals, Inc., Gulf States Tube Div., Rosenburg, TX: December 8, 2000.
TA–W–40,483, & A; Sumitomo Electric Wiring Systems, Inc., Wiring Harness Div., Edmonton, KY and Morgantown, KY: December 12, 2000.
TA–W–40,428; Sunlite Casual Furniture, Paragould, AR: December 4, 2000.
TA–W–40,377 & A; Dexter Shoe Co., Dexter, ME and National Sales Office, West Newton, MA: November 20, 2000.
TA–W–40,327; Storaenso North America, A Div. Of Storaenso OJY, Niagara, WI: October 29, 2001.
TA–W–40,257; H.R. Jones Veneer, Inc., Grand Ronde, OR: September 28, 2000.
TA–W–40,138; Cross Creek Apparel, LLC, Div of Russell Corp., Mount Airy, NC: March 12, 2001.
TA–W–39,717; Trio Tool and Die Manufacturing, Inc., Meadville, PA: July 17, 2000.
TA–W–39,532; Power Conversion Products, LLC, Crystal Lake, IL: June 18, 2000.

Also, pursuant to Title V of the North American Free Trade Agreement Implementation Act (P.L. 103–182) concerning transitional adjustment assistance hereinafter called (NAFTA–TAA) and in accordance with Section 250(a), Subchapter D, Chapter 2, Title II, of the Trade Act as amended, the Department of Labor presents summaries of determinations regarding eligibility to apply for NAFTA–TAA issued during the month of February, 2002.

In order for an affirmative determination to be made and a certification of eligibility to apply for NAFTA–TAA the following group eligibility requirements of section 250 of the Trade Act must be met:

(1) That a significant number or proportion of the workers in the workers' firm, or an appropriate subdivision thereof, (including workers in any agricultural firm or appropriate subdivision thereof) have become totally or partially separated from employment and either—

(2) That sales or production, or both, of such firm or subdivision have decreased absolutely,

(3) That imports from Mexico or Canada of articles like or directly competitive with articles produced by such firm or subdivision have increased, and that the increases imports contributed importantly to such workers' separations or threat of separation and to the decline in sales or production of such firm or subdivision; or

(4) That there has been a shift in production by such workers' firm or subdivision to Mexico or Canada of articles like or directly competitive with articles which are produced by the firm or subdivision.

Negative Determinations NAFTA–TAA

In each of the following cases the investigation revealed that criteria (3) and (4) were not met. Imports from Canada or Mexico did not contribute importantly to workers' separations.

There was no shift in production from the subject firm to Canada or Mexico during the relevant period.

NAFTA–TAA–05507; Dana Corp., Victor Reinz Div., Robinson, IL
NAFTA–TAA–05510; Corning Asahi Video, Inc., A Div. of Corning Asahi Video, State College, PA
NAFTA–TAA–05836; Tyco Electronics Corp., Jacobus, PA
NAFTA–TAA–05702; Meridian Automotive Systems, Portland, OR
NAFTA–TAA–05741; Cooper Industries, Western Power Products, Hood River, OR
NAFTA–TAA–05765; Prudential Steel, Inc., A Div. of Maverick Tube Co., Longview, WA
NAFTA–TAA–05785; Symbol Technologies, Inc., Houston Manufacturing, Houston, TX
NAFTA–TAA–05220; Trico Products Corp., Buffalo, NY
NAFTA–TAA–05236; J and J Tool, Guys Mills, PA
NAFTA–TAA–05293; Acme Pattern Works, Inc., Chicago Heights, IL
NAFTA–TAA–05558; Mocaro Dyeing and Finishing, Inc., Statesville, NC
NAFTA–TAA–05560; Fine Tech, Inc., d/b/a/ Daeduck International, RTP Div., Durham, NC
NAFTA–TAA–05597; Dana Corp., Spicer Driveshaft Manufacturing, Inc., Lima, OH
NAFTA–TAA–05670; Greenwood Mills, Durst Plant, Greenwood, SC

The workers firm does not produce an article as required for certification under Section 250(a), Subchapter D, Chapter 2, Title II, of the Trade Act of 1974, as amended.

NAFTA–TAA–05617; Plexus Corp., Electronic Assembly Corp., Neehah, WI
NAFTA–TAA–05752; Cascade General, Inc., Portland, OR
NAFTA–TAA–05805; GeoComm Corp., El Paso, TX
NAFTA–TAA–05607; ANR Pipeline Co., Detroit, MI

Affirmative Determinations NAFTA–TAA

NAFTA–TAA–05217; Amphenol Corp., Sine Systems, Mt. Clemens, MI: July 30, 2000.
NAFTA–TAA–05594; Square D Co., Schneider Electric North America,
NAFTA–TAA–05677; Swift Spinning Mills, Inc., Marubeni Denim Div., Columbus, GA: December 19, 2000.
NAFTA–TAA–05718; Iris Graphics, Inc., Billerica, MA: January 7, 2001.
NAFTA–TAA–05769; Materials Processing, Inc., Coatings Div., Riverview, MI: January 8, 2001
NAFTA–TAA–05807; Angelica Corp., Angelica Apparel, Savannah, TN: January 23, 2001
NAFTA–TAA–05812; 3M Bedford Park, Industrial Tape and Specialty Div., Bedford Park, IL: January 25, 2001.
NAFTA–TAA–05406; H.R. Jones Veneer, Inc., Grand Ronde, OR: October 8, 2000.
NAFTA–TAA–05486; Dixon Ticonderoga Co., Sandusky, OH: October 22, 2000.
NAFTA–TAA–05570; Arris Corp. a/k/a Antex Corp., Arris Network Plastics, El Paso, TX and Arris Consolidated Warehouse, El Paso, TX: November 20, 2000.
NAFTA–TAA–5635 & A; Sumitomo Electric Wiring Systems, Inc., Wiring Harness Div., Edmonton, KY and Morgantown, KY: December 12, 2000.
NAFTA–TAA–05651; Bourns, Inc., Networks/Sensors Controls Div., Logan, UT: December 2, 2000.
NAFTA–TAA–05666; Spicer Manufacturing, Inc., A Subsidiary of Dana Corp., Department 92, Pottstown, PA: December 5, 2000.
NAFTA–TAA–05730; SDS Lumber Co., Plywood Div., Bingen, WA: January 9, 2001.
NAFTA–TAA–05768; Ultrafem, Missoula, MT: January 14, 2001.
NAFTA–TAA–05778; Tyco Electronics, Georgetown Plant, Georgetown, KY: January 22, 2001.
NAFTA–TAA–05784; Ferraz Shawmut, Inc., Newburyport, MA: January 24, 2001

NAFTA–TAA–05814; Tyco International LTD, Tyco Electronics Corp., Arab, AL: January 28, 2001

NAFTA–TAA–05180; Paxar Corp., Formerly US Label Artistic, Including Workers of SDS Service, Inc., Liberty, KY: August 8, 2000.

I hereby certify that the aforementioned determinations were issued during the month of February, 2002. Copies of these determinations are available for inspection in Room C–5311, U.S. Department of Labor, 2000 Constitution Avenue, NW., Washington, DC 20210 during normal business hours or will be mailed to persons who write to the above address.

Dated: March 4, 2002.

Edward A. Tomchick,

Director, Division of Trade Adjustment Assistance.

[FR Doc. 02–6672 Filed 3–19–02; 8:45 am]

BILLING CODE 4510–30–M

DEPARTMENT OF LABOR

Employment and Training Administration

Notice of Determinations Regarding Eligibility To Apply for Worker Adjustment Assistance and NAFTA Transitional Adjustment Assistance

In accordance with section 223 of the Trade Act of 1974, as amended, the Department of Labor herein presents summaries of determinations regarding eligibility to apply for trade adjustment assistance for workers (TA–W) issued during the period of March, 2002.

In order for an affirmative determination to be made and a certification of eligibility to apply for worker adjustment assistance to be issued, each of the group eligibility requirements of Section 222 of the Act must be met:

(1) That a significant number or proportion of the workers in the workers' firm, or an appropriate subdivision thereof, have become totally or partially separated,

(2) That sales or production, or both, of the firm or subdivision have decreased absolutely, and

(3) That increases of imports of articles like or directly competitive with articles produced by the firm or appropriate subdivision have contributed importantly to the separations, or threat thereof, and to the absolute decline in sales or production.

Negative Determinations for Worker Adjustment Assistance

In each of the following cases the investigation revealed that criterion (3) has not been met. A survey of customers indicated that increased imports did not contribute importantly to worker separations at the firm.

TA–W–40,157 & A; The Steel Group, The Steel Co., Chicago, IL and Midwest Annealing and Processing Corp., East Chicago, IN

TA–W–40,436 & A; Dometic Corp., Awning Line, LAGrange, IN

TA–W–39,747; Precision Flame, Inc., Bourbonnais, IL

TA–W–40,672; Trio Dyeing and Finishing Co., Inc., Paterson, NJ

TA–W–40,453; Penley Corp., West Paris, ME

In the following cases, the investigation revealed that the criteria for eligibility have not been met for the reasons specified.

Increased imports did not contribute importantly to worker separations at the firm.

TA–W–40,773; S–B Power Tool Co., Walnut Ridge, AR

TA–W–40,720 & A; Rohm Device USA LLC, 760 Kifer Road, Sunnyvale, CA, Rohm Device USA LLC, 760 Kifer Road, Sunnyvale, CA and Rohm Device USA LLC, 611 N. Pastoria Avenue, Sunnyvale, CA

TA–W–40,550; Nokia, Inc., Nokia Networks, Product Operation, Fort Worth, TX

The workers firm does not produce an article as required for certification under Section 222 of the Trade Act of 1974.

TA–W–40,497; Lundeen's Inc., North Platte, NE

TA–W–40,444; Purcell Tire and Rubber Co., Santa Rita, NM

TA–W–39,282 & A,B,C,D,E; Standard Corp., Integrated Logistics, Wilmington, NC, Leland, NC, Kinston, NC, Grifton, NC Charleston, SC and Moncks Corner, SC

The investigation revealed that criteria (2) has not been met. Sales or production did not decline during the relevant period as required for certification.

TA–W–40,684; Independent Tool and Manufacturing, Inc., Meadville, PA

TA–W–40,610; The Goodyear Tire and Rubber Co., Gadsden, AL

Affirmative Determinations for Worker Adjustment Assistance

The following certifications have been issued; the date following the company name and location of each determination references the impact date for all workers of such determination.

TA–W–39,268; Whemco, Machine Shop, Homestead, PA: April 27, 2000

TA–W–39,269; Whemco, Midland, PA: April 27, 2000

TA–W–39,790; Vishay Intertechnologies, Inc., Vishay Cera-Mite Div., Oconto, WI: July 24, 2000

TA–W–40,149; Alphabet Engineer-Design Center, A Div. of Stoneridge, Inc., Cortland, OH: September 1, 2000

TA–W–40,270; Solectron Corp., Research Triangle Park, NC: October 9, 2000

TA–W–40,311; Buckeye Steel Castings Co., Columbus, OH: October 17, 2000

TA–W–40,382; Corning Asahi Video, A Div. of Corning, Inc., State College, PA: October 25, 2000. Chillicothe, OH: September 26, 2000

TA–W–40,409; Bogner of America, Inc., Newport, VT: November 21, 2000

TA–W–40,674 & A; B.B. Walker Co., Asheboro, NC and Bender Shoe Co., Somerset, PA: January 28, 2001

TA–W–40,475; New Holland North America, Inc., CNH Global N.V., Belleville, PA: January 4, 2001

TA–W–40,874; 3M Bedford Park, Industrial Tape and Specialty Div., Bedford Park, IL: January 25, 2001

TA–W–40,930; Prudential Steel, Inc., A Div. of Maverick Tube Co., Longview, WA: February 25, 2001

TA–W–40,436; Dometic Corp., Air Conditioning Line, LaGrange, IN: November 12, 2000

TA–W–40,814; Master Lock Co., A Subsidiary of Fortune Brands, Inc., Milwaukee, WI: January 25, 2001

TA–W–40,792; American Drew, A Div. of Ladd Furniture, Inc., North Wilkesboro, NC: December 5, 2000

TA–W–40,791; Lea Industries, A Div. of Ladd Furniture, Inc., Waynesville, NC: December 5, 2000

TA–W–40,739; Molycorp., Inc., A Subsidiary of Unocal, Questa, NM: January 8, 2001

TA–W–40,683; Vic's Custom Raft Frames, Inc., Grants Pass, OR: December 26, 2000

TA–W–40,648; Domino Amjet, Inc., Gurnee, IL: November 20, 2000

TA–W–40,681; Biokyowa, Inc., A Subsidiary of Kyowa Hakko Kogyo, Ltd, Cape Girardeau, MO: December 12, 2000

TA–W–40,664; Ferro Corp., Cesco Plant, Crooksville, OH: December 6, 2000

TA–W–40,633; Morrison Berkshire, Inc., North Adams, MA: January 15, 2001

TA–W–40,626; Allegheny Tool and Manufacturing Co., Inc., Meadville, PA: November 27, 2000

TA–W–40,625; Crane Pumps and Systems, Decatur, IL: September 26, 2000

TA–W–40,611; Hammond Power Solutions, Inc., Baraboo, WI: January 11, 2001
TA–W–40,571; Moon Tool and Die Co., Inc., Conneaut Lake, PA: October 22, 2000
TA–W–40,565; Environ, Inc., d/b/a Forrester's, Portland, OR: October 26, 2000
TA–W–40,384; K S Bearings, Inc., Greensburg, IN: November 16, 2000
TA–W–40,267; Lamb Technicon, A Div. of Unova, Warren, MI: October 12, 2000
TA–W–40,062; Tradewinds Cleaning Systems, Inc., Neosho, MO: September 4, 2000
TA–W–39,238; Amtec Precision Products, Inc., St. Clair Shores, MI: April 23, 2000
TA–W–40,563A & B; Bestform, Inc., Johnstown Distribution Center, Johnstown, PA and Windber Sewing Facility, Windber, PA: December 14, 2000
TA–W–40,563; Bestform, Inc., Broad Street Sewing Facility, Johnstown, PA: December 22, 2001
TA–W–40,508; Lexington Home Brands, Plant 16, Spruce Pines, NC: October 23, 2000
TA–W–49,442; Sohnen Enterprises, Inc., Santa Fe Springs, CA: May 25, 2000
TA–W–40,413; Mikes, Inc., Rod Shop, South Roxana, IL: November 13, 2000

Also, pursuant to Title V of the North American Free Trade Agreement Implementation Act (P.L. 103–182) concerning transitional adjustment assistance hereinafter called (NAFTA–TAA) and in accordance with section 250(a), Subchapter D, Chapter 2, Title II, of the Trade Act as amended, the Department of Labor presents summaries of determinations regarding eligibility to apply for NAFTA–TAA issued during the month of March, 2002.

In order for an affirmative determination to be made and a certification of eligibility to apply for NAFTA–TAA the following group eligibility requirements of section 250 of the Trade Act must be met:

(1) That a significant number or proportion of the workers in the workers' firm, or an appropriate subdivision thereof, (including workers in any agricultural firm or appropriate subdivision thereof) have become totally or partially separated from employment and either—

(2) That sales or production, or both, of such firm or subdivision have decreased absolutely,

(3) That imports from Mexico or Canada of articles like or directly competitive with articles produced by such firm or subdivision have increased, and that the increases imports contributed importantly to such workers' separations or threat or separation and to the decline in sales or production of such firm or subdivision; or

(4) That there has been a shift in production by such workers' firm or subdivision to Mexico or Canada of articles like or directly competitive with articles which are produced by the firm or subdivision.

Negative Determinations NAFA–TAA

In each of the following cases the investigation revealed that criteria (3) and (4) were not met. Imports from Canada or Mexico did not contribute importantly to workers' separations. There was no shift in production from the subject firm to Canada or Mexico during the relevant period.

NAFTA–TAA–05612A; Dometic Corp., Awning Line, LaGrange, IN
NAFTA–TAA–05379; Diamond Tool and Die, Townville, PA
NAFTA–TAA–05399; Shirts Plus II, Inc., Loretto, TN
NAFTA–TAA–05543; Nokia, Inc., Nokia Networks, Product Operations, Fort Worth TX
NAFTA–TAA–05715; Bilco Manufacturing Corp., Macon, GA
NAFTA–TAA–05372; New Era Textile Parts Co. Ltd, Gastonia, NC
NAFTA–TAA–05874; Bestform, Inc., Windber Cutting Facility, Windber, PA
NAFTA–TAA–05134; Precision Flame, Inc., Bourbonnais, IL

Affirmative Determinations NAFTA–TAA

NAFTA–TAA–05174; Engel Machinery, York, PA: July 6, 2000
NAFTA–TAA–05612; Dometic Corp., Air Conditioning Line, LaGrange, IN: November 12, 2000
NAFTA–TAA–04929; Sohnen Enterprises, Inc., Santa Fe Springs, CA: May 10, 2000
NAFTA–TAA–05018; Michigan Rivet Corp., Div. of McLaughlin Co., Petoskey, MI: June 20, 2000
NAFTA–TAA–05478; Conectl Corp., formerly Preco New Products, Boise, ID: September 19, 2000
NAFTA–TAA–05532; Flextronics International, Palm Habor, FL: November 7, 2000
NAFTA–TAA–05650; Holland Binkley Co., Axle Products Div., Delphos, OH: November 3, 2000
NAFTA–TAA–05744; Hayworth Inc., Holland Wood Plant, Holland, MI: December 4, 2000
NAFTA–TAA–05770; Kolenda Tool and Die, Inc., Wyoming, MI: January 23, 2001
NAFTA–TAA–05818; S–B Power Tool Co., Walnut Ridge, AR: January 28, 2001
NAFTA–TAA–05846; Evy of California, Bakersfield, CA: January 22, 2001
NAFTA–TAA–5860; Arlee Home Fashions, Leachville, AR: February 18, 2001

I hereby certify that the aforementioned determinations were issued during the month of March, 2002. Copies of these determinations are available for inspection in Room C–5311, U.S. Department of Labor, 200 Constitution Avenue, NW., Washington, DC 20210 during normal business hours or will be mailed to persons who write to the above address.

Dated: March 8, 2002.

Edward A. Tomchick,

Director, Division of Trade Adjustment Assistance.

[FR Doc. 02–6670 Filed 3–19–02; 8:45 am]

BILLING CODE 4510–30–M

DEPARTMENT OF LABOR

Employment and Training Administration

[TA–W–40,354]

International Paper Company, Erie, Pennsylvania; Including Contract Employees of Honeywell, Inc. Employed at International Paper Company Erie, Pennsylvania Amended Certification Regarding Eligibility to Apply for Worker Adjustment Assistance

In accordance with section 223 of the Trade Act of 1974 (19 USC 2273) the Department of Labor issued a Certification of Eligibility to Apply for Worker Adjustment Assistance on February 4, 2002, applicable to workers of International Paper Company, Erie, Pennsylvania. The notice was published in the **Federal Register** on February 28, 2002 (67 FR 9326).

At the request of Honeywell, Inc., the Department reviewed the certification for workers of the subject firm.

Information provided by the company shows that some workers at International Paper, Erie, Pennsylvania were contracted from Honeywell, Inc. to maintain and operate automated control systems required for the production of hardwood pulp and writing, text and cover paper produced at the Erie, Pennsylvania location of the subject firm.

Based on these findings, the Department is amending the

certification to include contract workers of Honeywell, Inc., employed at International Paper Company, Erie, Pennsylvania.

The intent of the Department's certification is to include all workers at International Paper Company, Erie, Pennsylvania, adversely affected by imports.

The amended notice applicable to TA–W–40,354 is hereby issued as follows:

All workers of International Paper Company, Erie, Pennsylvania including contract workers of Honeywell, Inc. engaged in employment related to the maintenance and operation of automated control systems required for the production of hardwood pulp and writing, text and cover paper at International Paper Company, Erie, Pennsylvania who became totally or partially separated from employment on or after November 2, 2000, through February 4, 2004, are eligible to apply for adjustment assistance under Section 223 of the Trade Act of 1974.

Signed at Washington, DC this 1st day of March, 2002.

Linda G. Poole,

Certifying Officer, Division of Trade Adjustment Assistance.

[FR Doc. 02–6668 Filed 3–19–02; 8:45 am]

BILLING CODE 4510–30–M

DEPARTMENT OF LABOR

Employment and Training Administration

Investigations Regarding Certifications of Eligibility To Apply for Worker Adjustment Assistance

Petitions have been filed with the Secretary of Labor under Section 221(a) of the Trade Act of 1974 (''the Act'') and are identified in the appendix to this notice. Upon receipt of these petitions, the Director of the Division of Trade Adjustment Assistance, Employment and Training Administration, has instituted investigations pursuant to section 221(a) of the Act.

The purpose of each of the investigations is to determine whether the workers are eligible to apply for adjustment assistance under Title II, Chapter 2, of the Act. The investigations will further relate, as appropriate, to the determination of the date on which total or partial separations began or threatened to begin and the subdivision of the firm involved.

The petitioners or any other persons showing a substantial interest in the subject matter of the investigations may request a public hearing, provided such request is filed in writing with the Director, Division of Trade Adjustment Assistance, at the address shown below, not later than April 1, 2002.

Interested persons are invited to submit written comments regrading the subject matter of the investigations to the Director, Division of Trade Adjustment Assistance, at the address shown below, not later than April 1, 2002.

The petitions filed in this case are available for inspection at the Office of the Director, Division of Trade Adjustment Assistance, Employment and Training Administration, U.S. Department of Labor, Room C–5311, 2000 Constitution Avenue, NW, Washington, DC 20210.

Signed at Washington, DC this 28th day of January, 2002.

Edward A. Tomchick,

Director, Division of Trade Adjustment Assistance.

APPENDIX

[Petitions Instituted on 01/28/2002]

TA–W	Subject firm (petitioners)	Location	Date of petition	Product(s)
40,634	LTV Steel (USWA)	Hennepin, IL	12/18/2001	Cold Rolled Sheet, Strip.
40,635	LTV Steel (USWA)	Warren, OH	12/04/2001	Coke and Coke By-Products.
40,636	King Manufacturing (Wkrs)	Corinth, MS	09/23/2001	Telephones.
40,637	Steelcraft, Inc. (Wkrs)	Warren, OH	11/27/2001	New Parts Supplied to Steel Companies.
40,638	Hayes Lemmerz Int'l (Wkrs)	Petersburg, MI	11/30/2001	Intake Manifolds.
40,639	Cooper Bussmann (Wkrs)	Goldsboro, NC	11/27/2001	Circuit Protection Devices—Fuses.
40,640	Timken Company (The) (USWA)	Canton, OH	11/29/2001	Bearings and Components.
40,641	Mobil Oil (Wkrs)	Dallas, TX	11/14/2001	Accounting Services.
40,642	Imerys Pigments (Wkrs)	Dry Branch, GA	11/27/2001	Kaolin Clay.
40,643	Robbins Witt (Wkrs)	Warren, AR	11/07/2001	Wood for Flooring.
40,644	Kraft Foods (Comp)	Minneapolis, MN	11/21/2001	Breakfast Cereals.
40,645	Star Specialty Knitting (Comp)	Laconia, NH	10/24/2001	Athletic Activewear.
40,646	GE Superabrasives (Comp)	Worthington, OH	11/28/2001	Superabrasives, Industrial Diamonds.
40,647	Biltwell Clothing (Comp)	Farmington, MO	11/29/2001	Warehousing, Distribution.
40,648	Domino Am Jet, Inc. (Comp)	Gurnee, IL	11/20/2001	Printers.
40,649	Steven Bank (Wkrs)	New York, NY	11/12/2001	Hospital Garments.
40,650	Signal Transformer Co. (Comp)	Inwood, NY	11/07/2001	Power Transformers.
40,651	Electron Corp. (The) (Wkrs)	Blockwell, OK	11/30/2001	Iron Castings.
40,652	VF Jeanswear Limited (Wkrs)	Springfield, MO	12/13/2001	Jeans and Pants.
40,652A	VF Jeanswear Limited (Wkrs)	Lebanon, MO	12/13/2001	Jeans and Pants.
40,653	Welland Chemical (USWA)	Newell, PA	12/13/2001	Mixed Acids.
40,654	In Vogue Apparel (Wkrs)	West Hazleton, PA	12/03/2001	Ladies' Slacks.
40,655	Fujitsu Microelectronics (Wkrs)	Gresham, OR	12/21/2001	Flash Memory Devices (Wafers).
40,656	Vanity Fair Intimates (Comp)	Monroeville, AL	12/10/2001	Ladies' Intimate Apparel.
40,656A	Vanity Fair Intimates (Comp)	Atmore, AL	12/10/2001	Ladies' Intimate Apparel.
40,657	Agilent Technologies (Wkrs)	Fort Collins, CO	11/27/2001	Silcon Wafers.
40,658	Polaroid Corporation (Comp)	Waltham, MA	12/08/2001	Film Packs.
40,659	Georgia Pacific (Wkrs)	Conway, NC	12/13/2001	Hardboard.
40,660	Mettler Toledo Process (Comp)	Woburn, MA	12/03/2001	PH Electrodes.
40,661	Osley and Whitney (Wkrs)	Westfield, MA	12/03/2001	Plastic Injection molds.
40,662	Rivers West Apparel (Wkrs)	Manti, UT	01/22/2001	Outdoor Apparel (Vests, Jackets).
40,663	Greenwood Mills—Liberty (Wkrs)	Liberty, SC	12/18/2001	Finished Denim Fabric.
40,664	Ferro Corporation (Wkrs)	Crooksville, OH	12/03/2001	Ceramics.
40,665	P and H Mining Equipment (Wkrs)	Milwaukee, WI	12/12/2001	Electric Mining Shovels.

APPENDIX—Continued

[Petitions Instituted on 01/28/2002]

TA–W	Subject firm (petitioners)	Location	Date of petition	Product(s)
40,666	Loren Casting (Wkrs)	Hollywood, FL	12/04/2001	Rings, Pendants, and Earrings.
40,667	Leech Tool and Die Works (Wkrs)	Meadville, PA	12/19/2001	Plastic Molds and Dies.
40,668	Ray Fabricating Corp (Comp)	Athens, TN	12/06/2001	Steel Fabricated Fittings.
40,669	Great Lakes Chemical (Comp)	Nitro, WV	12/14/2001	Flame Retardant & Fluid Phosphate Esters.
40,670	Knitcraft, Inc. (Comp)	Belmont, NC	12/17/2001	Unfinished Knit Goods.
40,671	Isola Laminate Systems (Comp)	LaCrosse, WI	12/10/2001	Laminate Base Materials.
40,672	Trio Dyeing and Finishing (Wkrs)	Paterson, NJ	12/14/2001	Textiles.
40,673	Stanley Fastening Systems (Wkrs)	E. Greenwich, RI	12/05/2001	Pneumatic nailers.
40,674	Bender Shoe (Comp)	Somerset, PA	12/17/2001	Western Boots.
40,675	Titan Plastic Group (Wkrs)	El Paso, TX	12/17/2001	Plastic Components.
40,676	Tyco Electronics (Wkrs)	Greensboro, NC	12/03/2001	Electronic Components.
40,677	Purcell Tire (Comp)	Silver City, NM	12/03/2001	Mining Tires.
40,678	Active Transportation (IBT)	Portland, OR	12/17/2001	Provide Trucking Service.
40,679	Eaton Corporation (Wkrs)	Sanford, NC	12/13/2001	Thermal Expansion Valve.
40,680	Pan Am Shoe Co. (Comp)	Camuy, PR	12/21/2001	Shoes.
40,681	Biokyowa, Inc. (Comp)	Cape Girardeau, MO	12/12/2001	Amino Acid Feed Supplements—Animals.
40,682	World Kitchen, Inc. (Comp)	Martinsburg, WV	12/20/2001	Glass Ceramic Cookware.
40,683	Vic's Custom Raft Frames (Wkrs)	Grants Pass, OR	12/26/2001	Hunting Blinds.
40,684	Independent Tool and Mfg. (Comp)	Meadville, PA	12/11/2001	Internal Parts—Plastic Mold Industry.
40,685	Ingersoll Rand (IAMAW)	Mayfield, KY	10/31/2001	Centrifugal Air Compressors.
40,686	AutoDie International (Comp)	Grand Rapids, MI	11/30/2001	Tool and Die—Auto Industry.
40,687	Goodyear Dunlop Tires (USWA)	Huntsville, AL	11/28/2001	Radial Tires.
40,688	Sanmina (Wkrs)	Clinton, NC	10/18/2001	Electronics.
40,689	Motor Coils Manufacturing (IUE)	St. Louis, MO	11/02/2001	Motor Coils.
40,690	Indiana Knitwear Corp (Comp)	Lyford, TX	11/09/2001	Active Wear.
40,691	Double Eagle Mfg. (Comp)	Tallassee, AL	11/05/2001	Children's Clothing.
40,692	VarTec CRM, Inc (Wkrs)	Waco, TX	11/30/2001	Provide Customer Relations Management.
40,693	Intervet, Inc (Comp)	Gainesville, GA	11/20/2001	Poultry Vaccines.
40,693A	Intervet, Inc. (Comp)	State College, PA	11/20/2001	Poultry Vaccines.
40,694	Commercial Warehouse (Wkrs)	El Paso, TX	11/18/2001	Surgical Blankets.
40,695	Nolato Shieldmate (Comp)	Itasca, IL	11/27/2001	Plastic Housing for Cellular Phones.
40,696	National Mills (Wkrs)	Dayton, TN	11/16/2001	Tee Shirts.
40,697	First Source Furniture (Wkrs)	Halls, TN	10/24/2001	Office Furniture.
40,698	3M San Marcos (Comp)	San Marcos, CA	01/02/2001	Packs, Bags, Rod Tubes—Fly Fishing.
40,699	AA Precisioneering (Comp)	Meadville, PA	10/24/2001	Tool and Die Makers.
40,700	Cmac Quartz Crystals (Wkrs)	Mechanicsburg, PA	10/22/2001	Electronic Oscillators.
40,701	Internet Arena (Wkrs)	Portland, OR	10/18/2001	Technical Support for Internet use.
40,702	Design and Cut, Inc. (Wkrs)	Cartersville, GA	10/18/2001	Sheat Shirts and Pant.
40,703	Liberty Fabrics (Comp)	New York, NY	11/19/2001	Fabrics.
40,704	Texfi Industries (Comp)	Jefferson, GA	10/22/2001	Apparel Fabric.
40,705	ITT Industries (Wkrs)	Newton, MA	12/18/2001	Electromechanical Switches.

[FR Doc. 02–6662 Filed 3–19–02; 8:45 am]

BILLING CODE 4510–30–M

DEPARTMENT OF LABOR

Employment and Training Administration

[TA–W–40,523]

Parallax Power Components LLC, MagneTek, Inc., Goodland, Indiana; Amended Certification Regarding Eligibility To Apply for Worker Adjustment Assistance

In accordance with section 223 of the Trade Act of 1974 (19 USC 2273) the Department of Labor issued a Certification of Eligibility to Apply for Worker Adjustment Assistance on January 23, 2002, applicable to workers of Parallax Power Components LLC, Goodland, Indiana. The notice was published in the **Federal Register** on February 5, 2002 (67 FR 5294).

At the request of the company, the Department reviewed the certification for workers of the subject firm. The workers are engaged in the production of transformers. New information shows that Parallax Power Components purchased the Goodland, Indiana location of MagneTek, Inc. on June 29, 2001.

Information also shows that some workers separated from employment at the subject firm had their wages reported under a separate unemployment insurance (UI) tax account for Parallax Power Components LLC, MagneTek, Inc.

Accordingly, the Department is amending the certification to properly reflect this matter.

The intent of the Department's certification is to include all workers of Parallax Power Components LLC, Goodland, Indiana who were adversely affected by increased imports.

The amended notice applicable to TA–W–40,523 is hereby issued as follows:

''All workers of Parallax Power Components LLC, MagneTek, Inc., Goodland, Indiana who became totally or partially separated from employment on or after December 17, 2000, through January 23, 2004, are eligible to apply for adjustment assistance under Section 223 of the Trade Act of 1974.''

Signed at Washington, DC this 6th day of March, 2002.

Linda G. Poole,

Certifying Officer, Division of Trade Adjustment Assistance.

[FR Doc. 02–6667 Filed 3–19–02; 8:45 am]

BILLING CODE 4510–30–M

DEPARTMENT OF LABOR

Employment and Training Administration

[TA–W–39,574]

SGL Carbon Group, Morganton, North Carolina; Notice of Revised Determination on Reconsideration

By letter of November 5, 2001, the International Chemical Workers Union, AFL–CIO, Local 427, requested administrative reconsideration regarding the Department's Negative Determination Regarding Eligibility to Apply for Worker Adjustment Assistance, applicable to the workers of the subject firm.

The initial investigation resulted in a negative determination issued on September 21, 2001, based on the finding that imports of graphite electrodes and specialty graphite products did not contribute importantly to worker separations at the subject plant. The denial notice was published in the **Federal Register** on October 11, 2001 (66 FR 51973).

To support the request for reconsideration, the International Chemical Workers Union, AFL–CIO, Local 427 provided additional information indicating that a sister plant (SGL Carbon Corporation, Carbon and Graphite Unit, Niagara Falls, New York) was certified for TAA. The applicant further stated that the subject plant produced the same products, shared the same customers and conducted interplant shipments with the sister facility.

A review of the allegation and information provided by the company shows that a meaningful portion of subject plant production was in direct support of the SGL Carbon Corporation, Carbon and Graphite Unit, Niagara Falls, New York plant. That facility was certified TA–W–39,053) on August 31, 2001.

Conclusion

After careful review of the additional facts obtained on reconsideration, I conclude that increased imports of articles like or directly competitive with those produced at SGL Carbon Group, Morganton, North Carolina, contributed importantly to the decline in sales or production and to the total or partial separation of workers at the subject firm. In accordance with the provisions of the Act, I make the following certification:

All workers of SGL Carbon Group, Morganton, North Carolina, who became totally or partially separated from employment on or after March 29, 2000 through two years from the date of this certification, are eligible to apply for adjustment assistance under Section 223 of the Trade Act of 1974.

Dated: Signed in Washington, DC this 28th day of February 2002.

Edward A. Tomchick,

Director, Division of Trade Adjustment Assistance.

[FR Doc. 02–6669 Filed 3–19–02; 8:45 am]

BILLING CODE 4510–30–M

DEPARTMENT OF LABOR

Employment and Training Administration

[TA–W–38, 811 and TA–W–38, 811b]

Universal Furniture Limited, Morristown, and Universal Furniture Limited Corporate Office, High Point, NC; Amended Certification Regarding Eligibility To Apply for Worker Adjustment Assistance

In accordance with Section 223 of the Trade Act of 1974 (19 U.S.C. 2273) the Department of Labor issued a Certification of Eligibility to Apply for Worker Adjustment Assistance on April 30, 2001, applicable to workers of Universal Furniture Limited, Morristown, Tennessee. The notice was published in the **Federal Register** on May 18, 2001 (66 FR 27690).

At the request of the company, the Department reviewed the certification for workers of the subject firm. The workers were engaged in the production of bedroom and dining room furniture.

Information shows that worker separations occurred at the Corporate Office, High Point, North Carolina location of the subject firm. The workers provide administrative support functions and purchasing for the subject firm's production facilities including Morristown, Tennessee.

Accordingly, the Department is amending the certification to included workers of the Universal Furniture Limited, Corporate Office, High Point, North Carolina.

The intent of the Department's certification is to include all workers of Universal Furniture Limited adversely affect by increased imports.

The amended notice applicable to TA–W–38,811 is hereby issued as follows:

All workers of Universal Furniture Limited, Morristown, Tennessee (TA–W–38, 811) and Universal Furniture Limited, Corporate Office, High Point, North Carolina (TA–W–38, 811B) who became totally or partially separated from employment on or after March 10, 2000, through April 30, 2003, are eligible to apply for adjustment assistance under Section 223 of the Trade Act of 1974.

Signed at Washington, DC this 5th day of March, 2002.

Linda G. Poole,

Certifying Officer, Division of Trade Adjustment Assistance.

[FR Doc. 02–6665 Filed 3–19–02; 8:45 am]

BILLING CODE 9510–30–M

DEPARTMENT OF LABOR

Employment and Training Administration

Investigations Regarding Certifications of Eligibility To Apply for Worker Adjustment Assistance

Petitions have been filed with the Secretary of Labor under Section 221(a) of the Trade Act of 1974 (''the Act'') and are identified in the Appendix to this notice. Upon receipt of these petitions, the Director of the division of Trade Adjustment Assistance, Employment and Training Administration, has instituted investigations pursuant to Section 221(a) of the Act.

The purpose of each of the investigations is to determine whether the workers are eligible to apply for adjustment assistance under title II, chapter 2, of the Act. The investigations will further relate, as appropriate, to the determination of the date on which total or partial separations began or threatened to begin and the subdivision of the firm involved.

The petitioners or any other persons showing a substantial interest in the subject matter of the investigations may request a public hearing, provided such request is filed in writing with the Director, Division of Trade Adjustment Assistance at the address shown below, not later than April 1, 2002.

Interested persons are invited to submit written comments regarding the subject matter of the investigations to the Director, Division of Trade Adjustment Assistance at the address shown below, not later than April 1, 2002.

The petitions filed in this case are available for inspection at the Office of the Director, Division of Trade Adjustment Assistance Employment and Training Administration, U.S. Department of Labor, Room C–5311, 200 Constitution Avenue, NW., Washington, DC 20210.

Signed at Washington, DC this 4th day of February, 2002.

Edward A. Tomchick,

Director, Division of Trade Adjustment Assistance.

APPENDIX

[Petitions Instituted on 02/04/2002]

TA–W	Subject firm (petitioners)	Location	Date of petition	Product(s)
40,706	Valley City Steel (Wkrs)	Valley City, OH	01/24/2002	Pickling and Slitting Hot Rolled Steel.
40,707	AG Simpson Automotive (UAW)	Sterling Height, MI	01/23/2002	Automotive Bumpers.
40,708	Cannon County Knitting (Wkrs)	Smithville, TN	01/07/2002	Knit Apparel.
40,709	Agilent Technologies (Wkrs)	Santa Clara, CA	01/25/2002	Cad Library Parts.
40,710	Alpha Carb Enterprises (Wkrs)	Leechburg, PA	01/11/2002	Steel and Tungsten Carbide.
40,711	Carolina Glove Co (Comp)	Conover, NC	01/09/2002	Work Gloves.
40,712	Xerox Corp. (Wkrs)	Webster, NY	01/08/2002	Copiers—Digital.
40,713	SDS Lumber Co. (Comp)	Bingen, WA	01/09/2002	Plywood.
40,714	Ferraz Shawmut, Inc. (Wkrs)	Newburyport, MA	01/21/2002	Semi-Conductor Fuses.
40,715	Stewart and Stevenson (Comp)	Albuquerque, NM	01/14/2002	Provide Diesel Engine Services.
40,716	Hathaway/Waterville Shirt (UNITE)	Waterville, ME	01/02/2002	Shirts.
40,717	DyStar LP (Comp)	Coventry, RI	01/09/2002	Specialty Chemicals.
40,718	Bilco Manufacturing Corp (Comp)	Macon, GA	01/07/2002	Wooden Shell Rolls (Wooden Cores).
40,719	Associated Spring (Wkrs)	Dallas, TX	01/22/2002	Tractor Power Bake and Springs.
40,720	Rohm Device USA, Inc. (Comp)	Sunnyvale, CA	01/14/2002	Semiconductors.
40,721	Engelhard Corp (Comp)	McIntyre, GA	01/18/2002	Paper Coating and Filling—Kaolin.
40,722	Willow Creek Apparel (Wkrs)	Jonesville, NC	01/07/2002	Loungewear Apparel.
40,723	FC Meyer Packaging (Wkrs)	St. Louis, MO	12/11/2001	Shoe Cartons.
40,724	LTV Steel, Inc. (Wkrs)	Independence, OH	12/14/2001	Steel.
40,725	TI Group Automotive (Wkrs)	Coldwater, MI	12/07/2001	Machine Tooling.
40,726	Liberty Manufacturing (Wkrs)	Liberty, SC	12/18/2001	Denim Fabric.
40,727	Wells Lamont (Wkrs)	Eupora, MS	12/21/2001	Work Gloves.
40,728	Mikan Group, Inc. (UNITE)	Long Island Cty, NY	12/05/2001	Sportswear—Pants, Skirts.
40,729	Liz Claiborne, Inc. (UNITE)	Mt. Pocono, PA	12/14/2001	Men's and Ladies' Clothing.
40,730	Mears Tool and Die, Inc (Comp)	Cochranton, PA	12/14/2001	Bag Racks for Retail Stores.
40,731	Fulflex of Virginia (Comp)	Stuart, VA	12/10/2001	Rubber Tapes and Threads.
40,732	LM Services (Wkrs)	Cumberland, MD	12/04/2001	Distribute Sportswear.
40,733	Blauer Manufacturing Co (Comp)	Chatom, AL	12/18/2001	Outerwear and Rainwear.
40,734	Modular Mining Systems (Comp)	Tucson, AZ	12/10/2001	Hardware and Software.
40,735	VF Jeanswear Limited (Comp)	Jackson, TN	11/27/2001	Ladies' and Men's Jeans.
40,735A	VF Jeanswear Limited (Comp)	Prague, OK	11/27/2001	Ladies' and Men's Jeans.
40,735B	VF Jeanswear Limited (Comp)	Seminole, OK	11/27/2001	Ladies' and Men's Jeans.
40,736	VF Jeanswear Limited (Comp)	Shenandoah, VA	11/28/2001	Ladies' and Men's Jeans.
40,736A	VF Jeanswear Limited (Comp)	Madison, VA	11/28/2001	Ladies' and Men's Jeans.
40,736B	VF Jeanswear Limited (Comp)	Luray, VA	11/28/2001	Ladies' and Men's Jeans.
40,737	VF Jeanswear Limited (Wkrs)	El Paso, TX	01/16/2001	Jeans and Pants.
40,737A	VF Jeanswear Limited (Wkrs)	Fabens, TX	01/16/2001	Jeans and Pants.
40,738	DW Manufacturing (Comp)	White City, OR	12/18/2001	Service Provider—Electronic related.
40,739	Molycorp, Inc. (Comp)	Questa, NM	12/06/2001	Molybdenum.
40,740	Corning, Inc. (Comp)	Greenville, OH	12/27/2001	Corning Products.
40,741	Leavitt Communications (Wkrs)	Lincolnshire, IL	12/06/2001	Pagers.
40,742	Huhtamaki Foodservice (Comp)	Waterville, ME	12/11/2001	Plates, Bowls, Platters.
40,743	Hewlett Packard (Wkrs)	Colorado Spring, CO	09/26/2001	Computers.
40,744	Wabash Aluminum Alloys (Comp)	Richmond, VA	12/13/2001	Deox.
40,745	New Holland North America (Wkrs)	Belleville, PA	12/13/2001	Loaders and Various Hay Tools.
40,746	Saint-Gobain Crystals (Comp)	Washougal, WA	12/07/2001	Crystals.
40,747	Bose Corp. (Wkrs)	Hillsdale, MI	12/13/2001	Automotive Loudspeakers.
40,748	Felix Schoeller Technical (PACE)	Pulaski, NY	12/18/2001	Photo and Speciality Paper.
40,749	Trinity Industries (Wkrs)	Longview, TX	12/18/2001	Railcars.
40,750	Mid America Building (Comp)	Hurley, NM	12/21/2001	Janitorial Services.
40,751	Meridian Automotive (Wkrs)	Portland, OR	12/20/2001	Truck Hoods.
40,752	Cooper Standard Auto (Wkrs)	Fairview, MI	11/27/2001	Automotive Fluid Systems.
40,753	Tresco Tool, Inc (Comp)	Guys Mills, PA	11/06/2001	Plastic Injection Molds, Dies.
40,754	Molycorp, Inc. (USWA)	Washington, PA	01/21/2001	Ferromolybdenum.
40,755	Crompton Corp., Uniroyal (USWA)	Naugatuck, CT	11/02/2001	Chemicals.
40,756	MRC Bearings, SKF USA (UAW)	Jamestown, NY	11/27/2001	Ball and Roller Bearings.
40,757	Sony Electronics (Wkrs)	Mt. Pleasant, PA	10/10/2001	TV's, Tubes and Components.
40,758	R and M Dress/Old Friends (Wkrs)	Lebanon, PA	10/26/2001	Ladies' Sportswear.
40,759	Jordana, Inc. (Comp)	Medley, FL	10/29/2001	Ladies' Apparel.
40,760	Sew Special, Inc. (Comp)	Randleman, NC	10/30/2001	Ladies' Apparel.
40,761	Lou Levy and Sons (UNITE)	New York, NY	01/15/2002	Ladies' Coats.
40,762	Presto Products Mfg (Wkrs)	Alamo Gordo, NM	01/14/2002	Small Electric Appliances.
40,763	R.C.M. Manufacturing Co (Comp)	Fall River, MA	10/15/2001	Ladies' Coats.
40,764	Fit Rite Headwear, Inc. (Comp)	Wilkes, Barre, PA	10/30/2001	Sew Safety Products.
40,765	Becton Dickinson (Comp)	Hancock, NY	01/09/2001	Disposable Surgical Blades.
40,766	Harper-Wyman Co (Comp)	Princeton, IL	12/05/2001	Top Burners and Oven Burners.
40,767	Uniroyal Goodrich Tire (USWA)	Tuscaloosa, AL	11/30/2001	Radial Tires.

APPENDIX—Continued

[Petitions Instituted on 02/04/2002]

TA–W	Subject firm (petitioners)	Location	Date of petition	Product(s)
40,768	Borg Warner Automotive (Wkrs)	Coldwater, MI	01/03/2002	Damper Assemblies.
40,769	JBI LP (Comp)	Osseo, WI	12/17/2001	Paint Line Equipment.
40,770	Tree Machine Tool, Inc (IAMAW)	Franklin, WI	12/01/2001	Marketing of Machine Tools.
40,771	3M Company (Comp)	Bristol, PA	12/27/2001	Sealing, Packaging Tape.

[FR Doc. 02–6664 Filed 3–19–02; 8:45 am]

BILLING CODE 4510–30–M

DEPARTMENT OF LABOR

Employment and Training Administration

[NAFTA–5829]

Chambersburg Engineering Co., Chambersburg, Pennsylvania; Notice of Termination of Investigation

Pursuant to Title V of the North American Free Trade Agreement Implementation Act (Public Law 103–182) concerning transitional adjustment assistance, hereinafter called NAFTA–TAA and in accordance with section 250(a), Subchapter 2, Title II, of the Trade Act of 1974, as amended (19 U.S.C. 2331), an investigation was initiated on February 4, 2002, in response to a petition filed by a company official on behalf of workers at Chambersburg Engineering Co., Chambersburg, Pennsylvania.

The petitioner has requested that the petition be withdrawn. Consequently, further investigation in this case would serve no purpose, and the investigation has been terminated.

Signed in Washington, DC this 22nd day of February, 2002.

Linda G. Poole,

Certifying Officer, Division of Trade Adjustment Assistance.

[FR Doc. 02–6671 Filed 3–19–02; 8:45 am]

BILLING CODE 4510–30–M

DEPARTMENT OF LABOR

Employment and Training Administration

[NAFTA–05013]

Outboard Marine Corporation (OMC), Delavan, WI; Notice of Termination of Investigation

Pursuant to Title V of the North American Free Trade Agreement Implementation Act (Public Law 103–182) concerning transitional adjustment assistance, hereinafter called (NAFTA–TAA), and in accordance with Section 250(a), Subchapter D, Chapter 2, Title II, of the Trade Act of 1974, as amended (19 U.S.C. 2273), an investigation was initiated on June 20, 2001, in response to a petition filed on behalf of all workers at Outboard Marine Corporation (OMC), Delavan, Wisconsin.

The company filed Chapter 7 bankruptcy for all the locations of the Outboard Marine Corporation, including the subject facility. The trustee was unable to locate the records of the company to provide the Department the information necessary to issue a determination regarding the worker group eligibility requirements under paragraph (a)(1)(A) or (a)(1)(B) of Section 250 of the Trade Act of 1974, as amended. Consequently, further investigation in this case would serve no purpose, and the investigation has been terminated.

Signed at Washington, DC, this 5th day of March, 2002.

Linda G. Poole,

Certifying Officer, Division of Trade Adjustment Assistance.

[FR Doc. 02–6663 Filed 3–19–02; 8:45 am]

BILLING CODE 4510–30–M

DEPARTMENT OF LABOR

Employment and Training Administration

[Docket No. NAFTA–05682]

Parallax Power Components LLC, Magnetek, Inc., Goodland, IN; Amended Certification Regarding Eligibility To Apply for NAFTA–Transitional Adjustment Assistance

In accordance with section 250(A), subchapter D, chapter 2, Title II, of the Trade Act of 1974 (19 U.S.C. 2273) the Department of Labor issued a Certification for NAFTA Transitional Adjustment Assistance on January 16, 2002, applicable to workers of Parallax Power Components LLC, Goodland, Indiana. The notice was published in the **Federal Register** on January 31, 1002 (67 FR 4751).

At the request of the company, the Department reviewed the certification for workers of the subject firm. The workers are engaged in the production of transformers. New information shows that Parallax Power Components purchased the Goodland, Indiana location of MagneTek, Inc., on June 29, 2001.

Information also shows that some workers separated from employment at the subject firm had their wages reported under a separated unemployment insurance (UI) tax account for Parallax Power Components LLC, MagneTek, Inc.

Accordingly, the Department is amending the certification to properly reflect this matter.

The intent of the Department's certification is to include all workers of Parallax Power Components LLC, Goodland, Indiana who were adversely affected by company imports from Mexico and a shift in production of transformers.

The amended notice applicable to NAFTA—05682 is hereby issued as follows:

All workers of Parallax Power Components LLC, MagneTek, Inc., Goodland, Indiana who became totally or partially separated from employment on or after December 14, 2000, through January 16, 2004, are eligible to apply for NAFTA–TAA under Section 250 of the Trade Act of 1974.

Signed at Washington, DC this 6th day of March, 2002.

Linda G. Poole,

Certifying Officer, Division of Trade Adjustment Assistance.

[FR Doc. 02–6666 Filed 3–19–02; 8:45 am]

BILLING CODE 4510–30–M

DEPARTMENT OF LABOR

Pension Welfare Benefits Administration

[Application No: D–10936]

Proposed Amendment to Prohibited Transaction Exemption 96–62 (PTE 96–62) To Permit Certain Authorized Transactions Between Plans and Parties in Interest

AGENCY: Pension and Welfare Benefits Administration, Department of Labor.

ACTION: Notice of proposed amendment to PTE 96–62.

SUMMARY: This document contains a notice of pendency before the Department of a proposed amendment to PTE 96–62 (61 FR 39988, July 31, 1996). PTE 96–62 permits certain prospective transactions between employee benefit plans and parties in interest where such transactions are specifically authorized by the Department and are subject to terms, conditions and representations which are substantially similar to two individual exemptions granted by the Department within the 60 month period ending on the date of filing of a written submission seeking authorization for the transaction. If adopted, the proposed amendment would affect plans, participants and beneficiaries of such plans and certain persons engaging in such transactions.

DATES: Written comments and requests for a public hearing must be received by the Department on or before May 6, 2002.

ADDRESSES: All written comments and requests for a public hearing (preferably, at least three copies) should be addressed to: U.S. Department of Labor, Office of Exemption Determinations, Attention: D–10936, Pension and Welfare Benefits Administration, Room N–5649, 200 Constitution Ave., NW, Washington, DC 20210. Interested persons are also invited to submit comments and/or hearing requests to PWBA via e-mail or fax. Any such comments should be sent either by e-mail to *padamsa@pwba.dol.gov* or by fax at (202) 219–0204 by the end of the scheduled comment period. All comments received will be available for public inspection at the Public Documents Room, Pension and Welfare Benefits Administration, U.S. Department of Labor, Room N–1513, 200 Constitution Ave., NW, Washington, DC 20210.

FOR FURTHER INFORMATION CONTACT: Allison Padams Lavigne, Office of Exemption Determinations, Pension and Welfare Benefits Administration, U.S. Department of Labor, (202) 693–8540 (This is not a toll-free number).

SUPPLEMENTARY INFORMATION: Notice is hereby given of the pendency before the Department of a proposed amendment to PTE 96–62. PTE 96–62 provides relief from a restriction described in sections 406(a) and 406(b) of the Employee Retirement Income Security Act (ERISA or the Act) or a parallel restriction described in section 8477(c)(2) of the Federal Employees' Retirement Systems Act (FERSA), and from the taxes imposed by section 4975(a) and (b) of the Internal Revenue Code of 1986 (the Code), by reason of a parallel provision described in section 4975(c)(1)(A) through (F) of the Code. The Department is proposing this amendment to PTE 96–62, on its own motion pursuant to section 408(a) of ERISA and section 4975(c)(2) of the Code and in accordance with the procedures set forth in 29 CFR part 2570, subpart B (55 FR 32836, August 10, 1990).[1]

Background

The rules set forth in section 406 of ERISA prohibit various transactions between employee benefit plans covered by Title I of ERISA and certain related parties, unless a statutory or administrative exemption applies to the transaction. These related parties, such as plan fiduciaries, sponsoring employers, unions and service providers are defined as parties in interest in section 3(14) of ERISA, and, in the absence of an exemption, may not engage in transactions described in section 406 of ERISA with a plan.

Specifically, section 406(a)(1) prohibits a fiduciary of a plan from causing the plan to engage in a transaction that constitutes a direct or an indirect: sale, exchange or leasing of any property between the plan and a party in interest; lending of money or other extension of credit between the plan and a party in interest; furnishing of goods, services or facilities between the plan and a party in interest; transfer to, or use by or for the benefit of a party in interest of any assets of the plan or acquisition on behalf of the plan of any employer security or real property in violation of section 407(a) of ERISA. Section 406(a)(2) provides that no fiduciary who has authority or discretion to control or manage plan assets shall permit the plan to hold any employer security or employer real property if he knows or should know that holding such security or real property violates section 407(a) of ERISA. Section 406(b) prohibits a fiduciary, with respect to a plan, from dealing with the assets of the plan in his own interest or for his own account; acting in his individual capacity or in any other capacity in any transaction involving the plan on behalf of a party (or representing a party) whose interests are adverse to the interests of the plan or interests of the participants or beneficiaries; and receiving any consideration for his own personal account from any party dealing with such plan in connection with a transaction involving the assets of the plan. In addition, such transactions that involve plans described in section 4975(e)(1) of the Code are generally subject to taxation under section 4975 of the Code. Lastly, the restrictions of section 8477(c)(2) of FERSA parallel section 406(b) of ERISA.

The Department has frequently exercised its statutory authority under section 408(a) of ERISA to grant both individual and class exemptions from the restrictions imposed by section 406 of ERISA where it has been able to find that the statutory criteria have been met.[2] This process has been helpful in providing exemptive relief for transactions which were prohibited, but were otherwise in the interests of the plans, participants and beneficiaries.

The Department has promulgated an exemption procedure[3] which provides, among other things, that an exemption will not be granted until a notice of pendency has been published in the **Federal Register**, and interested persons have been given an opportunity to comment on the proposed transaction. Following consideration of the entire record, the Department then makes its final determination whether to grant the exemption. If the Department contemplates not granting the requested exemption, the procedure also provides an applicant with the right to a conference.

Based on its experience in considering exemption applications, the Department has observed that many of the applications present routine transactions involving terms, conditions and circumstances which are substantially similar to those described

[1] Section 102 of Reorganization Plan No. 4 of 1978 (5 U.S.C. App. 1 (1996)) generally transferred the authority of the Secretary of the Treasury to issue administrative exemptions under section 4975(c)(2) of the Code to the Secretary of Labor.

[2] Section 408(a) of ERISA provides, in part, that the Department may not grant an exemption unless a finding is made that such exemption is administratively feasible, in the interests of the plan and of its participants and beneficiaries of such plan and protective of the rights of participants and beneficiaries of such plan.

[3] See 29 CFR part 2570, subpart B (55 FR 32836, August 10, 1990).

in previously granted individual exemptions. In fact, many exemption applicants have made it a practice to consult previously granted exemption files in the preparation of their submissions. Such applicants often submit applications containing nearly identical transactions, terms and conditions to those previously granted. Since the enactment of ERISA, the Department has exempted a large number of recurring transactions, including loans, leases and sales of real property. As a result, standard terms and conditions have developed over time which assure that the transaction is protective of the plan's interest.

The Department granted PTE 96–62 in 1996, in an effort to reduce regulatory burdens associated with processing individual exemptions from the prohibited transaction provisions of ERISA. Effective July 31, 1996, PTE 96–62 provides a mechanism for expediting consideration of those routine transactions which are similar to those that have been previously considered by the Department in prior exemption proceedings, without sacrificing the interests of the plan participants and beneficiaries. Accordingly, the exemption is available to a party proposing to engage in a prohibited transaction, if the party can demonstrate to the Department that such transaction and the material terms, conditions and representations therein are substantially similar to at least two individual exemptions previously granted by the Department.

Section I of PTE 96–62 provides relief from certain of the restrictions described in section 406(a) of ERISA and from the taxes imposed by section 4975(a) and (b) of the Code, by reason of a parallel provision described in section 4975(c)(1)(A) through (D) of the Code, for a transaction between a plan and a party in interest with respect to such plan, provided the conditions of the exemption are met. Under section II, additional relief is provided from certain of the restrictions described in section 406(b) of ERISA and the parallel restrictions described in section 8477(c)(2) of FERSA, as well as from the taxes imposed by section 4975(a) and (b) of the Code, by reason of a parallel provision described in section 4975(c)(1)(E) and (F). Sections I(a) and II(a) require that the transaction be substantially similar (as defined in section IV(a) of PTE 96–62) to transactions described in at least two individual exemptions that were granted by the Department, and which provided relief from the same restrictions as requested by the party, within the 60-month period ending on the date of filing of the written submission.[4]

As a result of the program's success, the number of requests for individual exemptions relating to routine transactions has decreased. Thus, the Department is concerned that, in the near future, parties wishing to seek authorization for transactions pursuant to PTE 96–62 will not be able to find two substantially similar individual exemptions which were granted by the Department within the required 60-month time period.[5] Accordingly, in order to assist parties who in the future wish to utilize the exemptive relief provided by PTE 96–62, the Department is proposing to expand Sections I(a) and II(a) to permit parties to either base their submission on substantially similar transactions described in two individual exemptions granted within the past 60-months; or on one individual exemption granted within the past 120-months and one transaction which received final authorization by the Department under PTE 96–62 within the past 60-months (the Authorized Transaction). The Department believes that the alternate method for satisfying the requirements of sections I(a) and II(a) will continue to ensure that the transactions that the party compares to its proposed transaction reflect the current policies of the Department.

As of November 2001, over 160 transactions have been authorized by the Department under PTE 96–62. The Department maintains, on its website (*www.dol.gov/dol/pwba/public/programs/oed/oednew20.htm*) a list of Authorized Transactions. This list includes the following information: the final authorization numbers, the name of the applicants, a description of the transactions, and the grant numbers and **Federal Register** citations of the exemptions on which the submissions were based. Parties wishing to base their submission on an Authorized Transaction will be able to refer to the submission previously filed by parties under PTE 96–62 and to the two granted individual exemptions identified as substantially similar for additional information regarding the subject transactions.[6]

The Department notes that all other conditions contained in PTE 96–62 must continue to be satisfied with respect to those parties seeking to base their submission on an Authorized Transaction rather than on two substantially similar individual exemptions. Accordingly, these parties should submit, among other things, a comparison of the proposed transaction with the Authorized Transaction and the transaction which was the subject of the individual exemption, including an explanation as to why any differences should not be considered material.

General Information

The attention of interested persons is directed to the following:

(1) The fact that a transaction is the subject of an exemption under section 408(a) of the Act and section 4975(c)(2) of the Code does not relieve a fiduciary or other party in interest or disqualified person from certain other provisions of ERISA and the Code to which the exemption does not expressly apply and the general fiduciary provisions of section 404 of ERISA. Section 404 requires, in part, that a fiduciary discharge his or her duties respecting the plan solely in the interest of participants and beneficiaries of the plan and in a prudent fashion in accordance with section 404(a)(1)(B) of ERISA. This exemption, if granted does not affect the requirement of section 401(a) of the Code that a plan must operate for the exclusive benefit of the employees of the employer maintaining the plan and their beneficiaries;

(2) Before any exemption may be granted under section 408(a) of ERISA and section 4975(c)(2) of the Code, the Department must find that the exemption is administratively feasible, in the interests of the plan(s) and of participants and beneficiaries, and protective of the rights of the participants and beneficiaries of the plan(s);

(3) This proposed amendment is supplemental to and not in derogation of any other provisions of ERISA or the Code, including statutory or administrative exemptions and transitional rules. Furthermore, the fact that a transaction is subject to an administrative or statutory exemption is not dispositive of whether the transaction is in fact a prohibited transaction; and

(4) If granted, the proposed amendment will be applicable to a transaction only if the transaction

[4] Section IV(a) defines the term ''substantially similar'' to mean alike in all material respects as determined by the Department, in its sole discretion.

[5] In this regard, transactions which are authorized pursuant to PTE 96–62 cannot be relied on by parties wishing to engage in similar transaction pursuant to PTE 96–62 because that exemption is limited to those transactions which were the subject of individual exemptions granted in accordance with the Department's exemption procedure.

[6] All files are available for public inspection at the Public Documents Room, Pension and Welfare Benefits Administration, U.S. Department of Labor, Room N–1513, 200 Constitution Ave., NW, Washington, DC 20210.

satisfies the conditions specified in the class exemption.

Written Comments and Requests for Hearing

All interested persons are invited to submit written comments or requests for a public hearing on the proposed amendment to the address or the fax number noted above within the time period set forth above. All comments received will made a part of the record of this proceeding and will be available for public inspection.

Proposed Amendment

Under the authority of section 408(a) of ERISA and section 4975(c)(2) of the Code, and in accordance with the procedures set forth in 29 CFR 2570, subpart B (55 FR 32836, August 10, 1990), the Department proposes to amend PTE 96–62 as set forth below:

(1) Section I(a) is amended to read ''The transaction is substantially similar (as defined in section IV(a) to transactions described in: (a) At least two individual exemptions that were granted by the Department, and provided relief from the same restriction, within the 60-month period ending on the date of filing of the written submission referred to in section III(a); or (b) one individual exemption that was granted by the Department, and provided relief from the same restriction, within the 120-month period ending on the date of filing the written submission referred to in section III(a), and at least one Authorized Transaction (as defined in section IV(g));''

(2) Section II(a) is amended to read ''The transaction is substantially similar (as defined in section IV(a) to transactions described in: (a) At least two individual exemptions that were granted by the Department, and provided relief from the same restriction, within the 60-month period ending on the date of filing of the written submission referred to in section III(a); or (b) one individual exemption that was granted by the Department, and provided relief from the same restriction, within the 120-month period ending on the date of filing the written submission referred to in section III(a), and at least one Authorized Transaction (as defined in section IV(g));''

(3) Section III(a)(4) is amended to read ''a comparison of the proposed transaction to at least two substantially similar transactions which were the subject of individual exemptions granted by the Department, or an individual exemption granted by the Department and an Authorized Transaction, and an explanation as to why any differences should not be considered material for purposes of this exemption;''

(4) Section IV(b)(6) is amended to read ''the Federal Register citations for the prior exemption(s) and/or the final authorization number of the Authorized Transaction (including the related Federal Register citations for the prior exemptions cited therein)identified by the party as substantially similar to the contemplated transaction.''

(5) Section IV(g) is added to read: ''The term Authorized Transaction means a transaction that has received final authorization pursuant to PTE 96–62 within a 60-month period ending on the date of the filing of the written submission referred to in section III(a).''

Signed at Washington, DC this 15th day of March 2002.

Ivan L. Strasfeld,

Director, Office of Exemption Determinations, Pension and Welfare Benefits Administration, U.S. Department of Labor.

[FR Doc. 02–6770 Filed 3–19–02; 8:45 am]

BILLING CODE 4520–29–P

MORRIS K. UDALL SCHOLARSHIP AND EXCELLENCE IN NATIONAL ENVIRONMENTAL POLICY FOUNDATION

The United States Institute for Environmental Conflict Resolution; Agency Information Collection Activities; Extension of Currently Approved Information Collection; Comment Request; Application for the National Roster of Environmental Dispute Resolution and Consensus Building Professionals

AGENCY: Morris K. Udall Scholarship and Excellence in National Environmental Policy Foundation, U.S. Institute for Environmental Conflict Resolution.

ACTION: Notice.

SUMMARY: In compliance with the Paperwork Reduction Act and supporting regulations, this document announces that the U.S. Institute for Environmental Conflict Resolution (the Institute), part of the Morris K. Udall Foundation, is planning to submit to the Office of Management and Budget (OMB) a request for an extension for the currently approved information collection (ICR), OMB control Number 2010–0030: Application for the National Roster of Environmental Dispute Resolution and Consensus Building Professionals (''National Roster of ECR Practitioners''), currently operating pursuant to Terms of Clearance issued July 29, 1999. Before submitting the extension to OMB for review and approval, the Institute is soliciting comments regarding the information collection (see section C. below entitled ''Questions to Consider in Making Comments''). This document provides information on the continuing need for the Roster of ECR Practitioners Application and the information recorded in the application.

DATES: Comments must be submitted on or before May 20, 2002.

ADDRESSES: Direct comments and requests for information, including copies of the ICR to: Joan C. Calcagno, Roster Manager: U.S. Institute for Environmental Conflict Resolution, 110 South Church Avenue, Suite 335o, Tucson, Arizona 85701. Fax: 520–670–5530. Phone: 520–670–5299. E-mail: *roster@ecr.gov*

FOR FURTHER INFORMATION CONTACT: Joan C. Calcagno, Roster Manager: U.S. Institute for Environmental Conflict Resolution, 110 South Church Avenue, Suite 335o, Tucson, Arizona 85701. Fax: 520–670–5530. Phone: 520–670–5299. E-mail: *roster@ecr.gov*

SUPPLEMENTARY INFORMATION:

A. Title for the Collection of Information

Application for National Roster of Environmental Dispute Resolution and Consensus Building Professionals (''National Roster of ECR Practitioners'').

B. Potentially Affected Persons

You are potentially affected by this action if you are a dispute resolution or consensus building professional in the environmental or natural resources field who wishes to be listed on the National Roster of Environmental Dispute Resolution and Consensus Building Professionals.

C. Questions To Consider in Making Comments

The U.S. Institute for Environmental Conflict Resolution requests your comments to any of the following questions related to collecting information for the extension of the Application for the National Roster of ECR Practitioners:

(1) Is the continued use of the application (''collection of information'') necessary for the proper performance of the functions of the agency, including whether the information has practical utility?

(2) Is the agency's estimate of the time spent completing the application (''burden of the proposed collection of information'') accurate, including the validity of the methodology and assumptions used?

(3) Can you suggest ways to enhance the quality, utility, and clarity of the information collected?

(4) Can you suggest ways to minimize the burden of the collection of information on those who are to respond, including through the use of appropriate automated electronic, mechanical, or other technological collection techniques or other forms of information technology?

D. Abstract

The U.S. Institute for Environmental Conflict Resolution plans to continue collecting information from environmental dispute resolution and consensus building neutral professionals who desire to become members of the National Roster of ECR Practitioners, from which those involved in environmental, natural resource, or public lands disputes may locate providers of neutral services. Responses to the collection of information (the application) are voluntary, but required to obtain a benefit (listing on the National Roster of Environmental Dispute Resolution and Consensus Building Professionals.) An agency may not conduct or sponsor, and a person is not required to respond to, a collection of information unless it displays a currently valid OMB control number.

Background Information: U.S. Institute for Environmental Conflict Resolution

The U.S. Institute for Environmental Conflict Resolution was created in 1998 by the Environmental Policy and Conflict Resolution Act (P.L. 105–156). The U. S. Institute is a federal program established by the U. S. Congress to assist parties in resolving environmental, natural resource, and public lands conflicts. The Institute is part of the Morris K. Udall Foundation, an independent federal agency of the executive branch overseen by a board of trustees appointed by the President. The Institute serves as an impartial, non-partisan institution providing professional expertise, services, and resources to all parties involved in such disputes, regardless of who initiates or pays for assistance. The Institute helps parties determine whether collaborative problem solving is appropriate for specific environmental conflicts, how and when to bring all the parties to the table, and whether a third-party facilitator or mediator might be helpful in assisting the parties in their efforts to reach consensus or to resolve the conflict. In addition, the Institute maintains the National Roster of ECR Practitioners, a roster of qualified facilitators and mediators with substantial experience in environmental conflict resolution, and can help parties in selecting an appropriate neutral. The Institute accomplishes most of its work by partnering, contracting with, or referral to, experienced practitioners.

The Need for and Use of the Information Collected in the Application for the Roster of ECR Practitioners

Roster of ECR Practitioners Application: The application can be viewed on-line from the Institute's website: www.ecr.gov (simply register in the system to access and review an application). A hardcopy application may also be obtained from the Institute for those without web access. (see contact information above.)

Background Information: The information collected in the application for the National Roster of ECR Practitioners is the basis for an on-line database, searchable by a combination of 10 criteria designed to locate appropriate practitioners by matching desired characteristics with the information in the application. The application was first available in September 1999 and remains available on a continuous basis. The Roster of ECR Practitioners first became operational in February 2000 with 60 members and currently includes over 190 members from 40 states, the District of Columbia, and 2 Canadian provinces. They represent a broad cross-section of 31 different professional backgrounds and a broad distribution of case experience across 39 types of case issues. Each member has documented experience which meets the roster entry criteria, and each has experience as a neutral in some or all of the following: mediation, facilitation, consensus building, process design, conflict assessment, system design, neutral evaluation/fact finding, superfund allocation, and/or regulatory negotiation.

The specific entry criteria and applicable definitions are available from the Institute's web site: *www.ecr.gov*. Generally stated, the entry criteria require that an applicant has:

(1) Served as the lead neutral in a collaborative process (e.g., mediation, consensus building, conflict assessment) for at least 200 case hours in two to ten environmental cases, and

(2) Accumulated a total of 60 points across three categories: additional case experience and complex case experience; experience as a trainer or trainee; and substantive work/volunteer/educational experience in fields related to Alternative Dispute Resolution/Environmental Conflict Resolution, such as law, science, public administration.

Use of the National Roster of ECR Practitioners: The roster search and referral service is accessible through the Institute. The Institute uses the roster (specifically the information collected in the application) as a resource when making referrals to those searching for neutral ECR professionals with specific experience, backgrounds, or expertise (external referrals). The Institute also uses the roster as a resource when locating appropriate ECR neutral professionals with whom to partner/sub-contract for projects in which the Institute is involved (internal referrals). The roster referral system is enhanced through cooperation with existing programs and networks of environmental dispute-resolution and consensus-building practitioners familiar with the issues in their respective states and regions. Twenty-one EPA ADR Specialists also have direct, electronic access to search the roster. Next, it is anticipated that other federal agencies will gain direct access over the next year. Eventually, the roster will be available to the public through the internet.

Federal agencies are not required to select from the roster. Professionals not on the roster remain fully eligible to serve as ECR practitioners in disputes involving federal agencies. Finally, being listed on the roster does not guarantee additional work for the practitioner.

Development and Need for the National Roster of ECR Practitioners: The roster was developed with the support of the Environmental Protection Agency (EPA). Based on a 1997 study concerning the potential of a national roster of qualified practitioners, EPA decided to support the development of such a roster through the Institute.

To develop the project, the EPA and the Institute brought together a work group consisting of EPA dispute resolution professionals and contracting officers, state dispute resolution officials, private dispute resolution practitioners and academics. Informed in part by ideas from this group, the EPA and the Institute proposed roster entry qualifications and draft application, which were published in the **Federal Register** in November 1998. Before the entry criteria and application were finalized, the comments received in response to the **Federal Register** notice were reviewed. Outreach continued through meetings and newsletter articles, as well as individual communications to professional associations, state and federal government agencies, dispute resolution

firms, individual practitioners, professional associations of attorneys, environmental and citizen groups.

The roster was created, and continues to be needed, for several reasons. The use of Alternative Dispute Resolution (ADR) in the environmental and public policy arena has grown markedly over the last two decades. In this context, ADR processes now include techniques ranging from conflict prevention, such as consensus building and facilitation of public policy dialogues, to specific dispute resolution through assisted negotiations and mediation. The number of environmental conflict resolution (ECR) practitioners has grown as the field has gained prominence and professionals from a variety of disciplines have become attracted to its advantages and opportunities.

An essential step in any dispute resolution process occurs when parties select a practitioner. Parties making the selection rightfully expect that the practitioner will be qualified to provide the service sought and has experience and style matched well to the nature of the issues and to the parties. Thus, the Roster of ECR Practitioners is designed to advance the interests of the growing field of dispute resolution, reflect the evolving standards of best practice, and help direct the expenditure of public funds for quality services.

Over the last fifteen years of using ADR, EPA found that parties to a dispute or controversy will generate a list of desired characteristics, such as experience with specific types of issues, cases or disputes, location, and other factors, that will be used in an attempt to identify the right person to assist them. Locating practitioners meeting these criteria can be a ''hit-or-miss'' experience depending on the resources, available time, and experience of the parties with locating appropriate neutrals.

Although the EPA operates a national service contract that manages major cases through a list of experienced providers, it is limited in scope and membership, and as a consequence it can be burdensome to use for identifying neutrals for small or localized cases. Most other Federal agencies have no vehicle or information available to assist in this important first step to conducting a good dispute resolution process.

More specifically, the National Roster of ECR Practitioners is necessary for the proper performance of the Institute's goals: to resolve Federal environmental disputes in a timely and constructive manner; to increase the appropriate use of environmental conflict resolution; to improve the ability of Federal agencies and other interested parties to engage in ECR effectively; and to promote collaborative problem-solving and consensus-building during the design and implementation of Federal environmental policies so as to prevent and reduce the incidence of future environmental disputes.

In addition, the U.S. Institute's enabling legislation directs the Institute to work with practitioners located near the conflict whenever practical. Consistent with this mandate, the Institute must be able to identify appropriate experienced dispute resolution and conciseness building professionals in an efficient manner.

Finally, the Administrative Dispute Resolution (AADR@) Act of 1996 (5 U.S.C. 571, et. seq.) authorizes the Federal government to contract with dispute resolution professionals (*e.g.*, facilitators or mediators) to assist it and other parties to disputes or issues in controversy in reaching an agreement, settlement, or consensus. The ADR Act authorizes the government to take steps to make identifying and contracting with neutrals easier (cf. 5 U.S.C. 573(c)).

Thus, the goal of the National Roster of ECR Practitioners and the referral system is to improve access to qualified environmental dispute resolution and consensus building professionals for the Institute and others sponsoring or engaging in environmental conflict resolution processes. The roster expedites the identification of appropriate professionals, shortens the time needed to complete contracting documents, and helps refer parties to practitioners, particularly practitioners in the locale of the dispute.

More specifically, the roster and the referral system provide an efficient, credible and user-friendly source from which to systematically identify experienced environmental neutral professionals; increase the use of collaborative processes by providing a useful tool for locating appropriate practitioners; and provide users with a detailed Practitioner Profiles, reflecting information contained in the application, to be used as a helpful first step in the process of selecting an appropriate neutral.

E. Burden Statement

The application compiles data available from the resumes of dispute resolution and consensus building professionals into a format that is standardized for efficient and fair eligibility review, database searches, and retrievals. A professional needs to complete the form only one time. Once the application is approved, the roster member has continual access to his or her on-line account to update information, on a voluntary basis. The burden includes time spent to review instructions, review resume information, and enter the information in the form.

Likely Respondents: Environmental dispute resolution and consensus building professionals (new respondents); existing roster members (for updating)

Proposed Frequency of Response: one, with voluntary updates approximately once per year.

Estimated Number of New Respondents (first extension year): 30.

Estimated Number of Existing Respondents—for updating (first extension year): 125.

Estimated Number of New Respondents (per year for succeeding year): 30.

Estimated Number of Existing Respondents-for updating (per year for succeeding year): 125.

Respondent Time Burden Estimates

Estimate Time per New Response: 150 minutes (2.5 hours).

Estimated Number of Updates (per year): 1, for 125 existing respondents.

Estimated Time for Update: 15 minutes.

Estimated Total First Extension Year Burden: 4500 minutes (75 hours) (30 new respondents); 1875 minutes (31.25 hours)(125 updates).

Estimated Total Subsequent Year Annual Burden: 4500 minutes (75 hours) (30 new respondents); 1875 minutes (31.25 hours)(125 updates).

Respondent Cost Burden Estimates (at $150. per hour)

No Capital Or Start-Up Costs

Estimated Cost per Respondent (first extension year): $375 (new respondents); 38 (update).

Estimated Cost per Respondent (subsequent year): $375 (new respondents); 38 (update).

Estimated Total First Extension Year Burden: $11,250 (new respondents); $4,750 (updates).

Estimated Total Subsequent Year annual Bur $11,250 (new respondents); $4,750 (updates).

Burden means the total time, effort, or financial resources expended by persons to generate, maintain, retain, or disclose or provide information to or for a Federal agency. This includes the time needed to review instructions; develop, acquire, install, and utilize technology and systems for the purpose of collecting, validating, and verifying information, processing and maintaining information, and disclosing

and providing information and transmitting information.

(Authority: 20 U.S.C. Sec. 5601–5609)

Dated the 14th day of March, 2002.

Christopher L. Helms,

Executive Director, Morris K. Udall Foundation.

[FR Doc. 02–6684 Filed 3–19–02; 8:45 am]

BILLING CODE 6820–FN–P

NATIONAL ARCHIVES AND RECORDS ADMINISTRATION

Records Schedules; Availability and Request for Comments

AGENCY: National Archives and Records Administration (NARA).

ACTION: Notice of availability of proposed records schedules; request for comments.

SUMMARY: The National Archives and Records Administration (NARA) publishes notice at least once monthly of certain Federal agency requests for records disposition authority (records schedules). Once approved by NARA, records schedules provide mandatory instructions on what happens to records when no longer needed for current Government business. They authorize the preservation of records of continuing value in the National Archives of the United States and the destruction, after a specified period, of records lacking administrative, legal, research, or other value. Notice is published for records schedules in which agencies propose to destroy records not previously authorized for disposal or reduce the retention period of records already authorized for disposal. NARA invites public comments on such records schedules, as required by 44 U.S.C. 3303a(a).

DATES: Requests for copies must be received in writing on or before May 6, 2002. Once the appraisal of the records is completed, NARA will send a copy of the schedule. NARA staff usually prepare appraisal memorandums that contain additional information concerning the records covered by a proposed schedule. These, too, may be requested and will be provided once the appraisal is completed. Requesters will be given 30 days to submit comments.

ADDRESSES: To request a copy of any records schedule identified in this notice, write to the Life Cycle Management Division (NWML), National Archives and Records Administration (NARA), 8601 Adelphi Road, College Park, MD 20740–6001. Requests also may be transmitted by FAX to 301–713–6852 or by e-mail to *records.mgt@nara.gov.* Requesters must cite the control number, which appears in parentheses after the name of the agency which submitted the schedule, and must provide a mailing address. Those who desire appraisal reports should so indicate in their request.

FOR FURTHER INFORMATION CONTACT: Marie Allen, Director, Life Cycle Management Division (NWML), National Archives and Records Administration, 8601 Adelphi Road, College Park, MD 20740–6001. Telephone: (301) 713–7110. E-mail: *records.mgt@nara.gov.*

SUPPLEMENTARY INFORMATION: Each year Federal agencies create billions of records on paper, film, magnetic tape, and other media. To control this accumulation, agency records managers prepare schedules proposing retention periods for records and submit these schedules for NARA's approval, using the Standard Form (SF) 115, Request for Records Disposition Authority. These schedules provide for the timely transfer into the National Archives of historically valuable records and authorize the disposal of all other records after the agency no longer needs them to conduct its business. Some schedules are comprehensive and cover all the records of an agency or one of its major subdivisions. Most schedules, however, cover records of only one office or program or a few series of records. Many of these update previously approved schedules, and some include records proposed as permanent.

No Federal records are authorized for destruction without the approval of the Archivist of the United States. This approval is granted only after a thorough consideration of their administrative use by the agency of origin, the rights of the Government and of private persons directly affected by the Government's activities, and whether or not they have historical or other value.

Besides identifying the Federal agencies and any subdivisions requesting disposition authority, this public notice lists the organizational unit(s) accumulating the records or indicates agency-wide applicability in the case of schedules that cover records that may be accumulated throughout an agency. This notice provides the control number assigned to each schedule, the total number of schedule items, and the number of temporary items (the records proposed for destruction). It also includes a brief description of the temporary records. The records schedule itself contains a full description of the records at the file unit level as well as their disposition. If NARA staff has prepared an appraisal memorandum for the schedule, it too includes information about the records. Further information about the disposition process is available on request.

Schedules Pending

1. Department of the Air Force, Office of the Secretary (N1-AFU–02–1, 2 items, 1 temporary item). Electronic copies created using electronic mail and word processing of appointment books, daily schedules, and telephone logs of the Secretary of the Air Force, November 1997 to January 2001. Recordkeeping copies of these files are proposed for permanent retention.

2. Department of Defense, Joint Staff and Combatant Commands (N1–218–00–6, 132 items, 59 temporary items). Facilitative records relating to operations, planning, and command and control matters accumulated by the Joint Staff and combatant commands. Included are reports, correspondence, summaries, case files, background papers, drafts, transcripts, publications, minutes of meetings, and other files pertaining to such matters as military readiness, special and regular operations, exercises, plans, codewords, crisis incidents, reconnaissance, surveillance, war games, alerts, strategic weapons failures, space and satellite operations, aerospace, and antiterrorism. Also included are electronic copies of documents created using electronic mail and word processing and electronic systems maintained at combatant commands that feed into systems maintained at higher levels. Recordkeeping copies of such files as operations and readiness policies and reports, directives, lessons learned, crisis incident action books, emergency planning policies and procedures, and publications are proposed for permanent retention.

3. Department of Defense, Joint Staff and Combatant Commands (N1–218–00–7, 51 items, 33 temporary items). Records relating to logistics, supply services, and budget matters accumulated by the Joint Staff and combatant commands. Included are reports, correspondence, case files, background papers, drafts, transcripts, publications, minutes of meetings, and other records pertaining to such matters as routine logistics and mobilization activities, general budget and financial management, payroll, procurement, space management, travel, transportation, and safety and maintenance activities. Also included are electronic copies of documents created using electronic mail and word

processing and electronic systems maintained at combatant commands that feed into systems maintained at higher levels. Recordkeeping copies of files relating to such matters as policies and procedures, oversight and assessments, and high-level budget activities are proposed for permanent retention.

4. Department of Defense, Joint Staff and Combatant Commands (N1–218–00–10, 61 items, 46 temporary items). Records relating to general administration and management accumulated by the Joint Staff and combatant commands. Included are such records as reports, correspondence, summaries, case files, background papers, drafts, transcripts, publications, and minutes of meetings. Files pertain to such matters as general office operations, standard operating procedures, the preparation of reports and plans, publications, forms management, investigations, audits and surveys, routine studies, agreements, and records management. Also included are electronic copies of documents created using electronic mail and word processing and electronic systems maintained at combatant commands that feed into systems maintained at higher levels. Recordkeeping copies of such files as indexes to permanent records, official studies, schedules of high officials, significant investigations, audiovisual records, administrative orders, and meeting/conference records are proposed for permanent retention.

5. Department of Defense, Joint Staff and Combatant Commands (N1–218–00–11, 44 items, 43 temporary items). Records relating to information technology accumulated by the Joint Staff and combatant commands. Included are reports, correspondence, directives, plans, memorandums, case files, background papers, drafts, transcripts, publications, minutes of meetings, and other files pertaining to such matters as the planning, procurement, testing, security, operation, and maintenance of information technology systems. Also included are electronic copies of documents created using electronic mail and word processing and electronic systems maintained at combatant commands that feed into systems maintained at higher levels. Recordkeeping copies of technical documentation relating to records scheduled for transfer to the National Archives are proposed for permanent retention.

6. Department of State, Bureau of Human Resources (N1–59–00–12, 12 items, 10 temporary items). Project working papers, legislative files, and labor management case files. Also included are electronic copies of documents created using electronic mail and word processing. Proposed for permanent retention are personnel policy historical files and reports relating to personnel policy and planning.

7. Department of State, Office of the Legal Advisor (N1–59–02–1, 2 items, 1 temporary item). Electronic copies of subject and country files of the Assistant Legal Advisor for Nonproliferation created using electronic mail and word processing. Recordkeeping copies of the files are proposed for permanent retention.

8. Environmental Protection Agency, Office of Prevention, Pollution, and Toxics (N1–412–01–5, 3 items, 2 temporary items). Paper records that relate to reporting information on chemicals or chemical mixtures under Section 8 of the Toxic Substances Control Act and have been microfilmed. Also included are electronic copies of documents created using electronic mail and word processing. Microfilm copies and paper records that have not been filmed, consisting of such documents as health studies, forms, and reports, are proposed for permanent retention.

9. Executive Office of the President, Office of National Drug Control Policy (N1–429–01–1, 43 items, 20 temporary items). Electronic copies of documents created using word processing. Proposed for permanent retention are the recordkeeping copies of such records as subject files of the director, deputy director, and other agency offices, the director's correspondence files and a related tracking system, and audio and video recordings.

10. Inter-American Foundation, Agency-wide (N1–454–02–1, 9 items, 7 temporary items). Records relating to activities of the Board of Directors and the President of the Foundation, including such files as copies of meeting minutes, correspondence, reports, public notices to Congress of grants under consideration by the Foundation, and electronic copies of documents created using electronic mail and word processing. Proposed for permanent retention are recordkeeping copies of minutes of meetings of the Board of Directors and Board of Directors policy files.

11. Inter-American Foundation, Office of the General Counsel (N1–454–02–2, 6 items, 6 temporary items). Records relating to activities of the Office of the General Counsel. Included are grant summaries, records of in-country legal assistance in support of grantees, and records of General Counsel participation in congressional budget hearings. Also included are electronic copies of documents created using electronic mail and word processing.

12. Inter-American Foundation, Office of Programs (N1–454–02–3, 3 items, 3 temporary items). Case files pertaining to grants awarded under the Foundation's Field Research Fellowship Program and U.S. Graduate Study Fellowship Program for Latin American and Caribbean Citizens. Also included are electronic copies of documents created using electronic mail and word processing.

13. Inter-American Foundation, Office of Budget and Financial Controls (N1–454–02–4, 4 items, 3 temporary items). Records relating to the administration of funding received from the Social Progress Trust Fund, including electronic copies of documents created using electronic mail and word processing. Proposed for permanent retention are recordkeeping copies of budget formulation and submission files.

14. Nuclear Regulatory Commission, Regional Offices (N1–431–00–20, 132 items, 96 temporary items). Electronic records in the Commission's Agencywide Document Access and Management System (ADAMS) accumulated by agency Regional Offices, including electronic copies of records created using office automation tools and of records used to create ADAMS portable document format files. Records proposed for disposal include electronic recordkeeping copies of records related to committees and conferences for which the agency is not the sponsor, enforcement case files that lack historical significance, fuel facilities docket case files, routine correspondence accumulated below the regional administrator level, operator licensing examination packages, licensee mismanagement files, nuclear material accountability worksheets, personnel exposure files, and radiation protection program records. Paper copies of these records were previously approved for disposal. Series proposed for permanent retention include recordkeeping copies of such files as emergency planning records, significant enforcement actions, selected fuel facilities docket case files, program correspondence accumulated at the regional administrator level, inspection and enforcement case files, and regulatory history files for proposed and final rulemaking.

15. Office of Personnel Management, Office of Administrative Law Judges (N1–478–02–2, 4 items, 4 temporary items). Electronic copies of administrative law judge qualifications files created using electronic mail and

word processing. This schedule also increases the retention period for recordkeeping copies of these files, which were previously approved for disposal.

Dated: March 8, 2002.

Michael J. Kurtz,

Assistant Archivist for Record Services—Washington, DC.

[FR Doc. 02–6636 Filed 3–19–02; 8:45 am]

BILLING CODE 7515–01–U

NATIONAL ARCHIVES AND RECORDS ADMINISTRATION

Nixon Presidential Historical Materials; Opening of Materials

AGENCY: National Archives and Records Administration.

ACTION: Notice of opening of materials.

SUMMARY: This notice announces the opening of additional files from the Nixon Presidential historical materials. Notice is hereby given that, in accordance with section 104 of Title I of the Presidential Recordings and Materials Preservation Act (PRMPA, 44 U.S. C. 2111 note) and 1275.42(b) of the PRMPA Regulations implementing the Act (36 CFR part 1275), the agency has identified, inventoried, and prepared for public access integral file segments among the Nixon Presidential historical materials.

DATES: The National Archives and Records Administration (NARA) intends to make these materials described in this notice available to the public beginning May 6, 2002. In accordance with 36 CFR 1275.44, any person who believes it necessary to file a claim of legal right or privilege concerning access to these materials should notify the Archivist of the United States in writing of the claimed right, privilege, or defense before April 19, 2002.

ADDRESSES: The materials will be made available to the public at the National Archives at College Park research room, located at 8601 Adelphi Road, College Park, Maryland beginning at 8:45 a.m. Researchers must have a NARA researcher card, which they may obtain when they arrive at the facility.

Petitions asserting a legal or constitutional right or privilege which would prevent or limit access must be sent to the Archivist of the United States, National Archives at College Park, 8601 Adelphi Road, College Park, Maryland 20740–6001.

FOR FURTHER INFORMATION CONTACT: Karl Weissenbach, Director, Nixon Presidential Materials Staff, 301–713–6950.

SUPPLEMENTARY INFORMATION: The integral file segments of textual materials to be opened on May 6, 2002, consist of 54 cubic feet. The White House Central Files Unit is a permanent organization within the White House complex that maintains a central filing and retrieval system for the records of the President and his staff. Some of the materials are from the White House Central Files, Subject Files. The Subject Files are based on an alphanumerical file scheme of 61 primary categories. Listed below are the integral file segments from the White House Central Files, Subject Files in this opening.

Subject Category

Volume: 8 cubic feet.

Federal Government (FG)

FG 93 President's Commission on Income Maintenance Program

FG 94 Commission on Marine Service, Engineering, and Resources

FG 106 District of Columbia

FG 150 Interstate Commerce Commission

FG 151 Joint Commission on Aging

FG 153 National Advisory Commission on Civil Disorders

FG 154 National Advisory Commission on Health Facilities

FG 155 National Advisory Committee on Libraries

FG 156 National Advisory Commission on Low Income Housing

FG 157 National Advisory Council on Adult Basic Education

FG 163 National Advisory Council on Vocational Education

FG 165 National Alliance of Businessmen

FG 222 Tax Court of the United States

FG 223 Temporary Commission on Pennsylvania Avenue

FG 224 Tennessee Valley Authority

In accordance with the provisions of Executive Order 12958, several series within the National Security Council files have been systematically reviewed for declassification and will be made available. In addition, a number of documents which were previously withheld from public access have been re-reviewed for release and or declassified under the provisions of Executive Order 12958, or in accordance with 36 CFR 1275.56 (Public Access Regulations).

National Security Council Files series:

Volume: 45 cubic feet.

A number of documents which were previously withheld from public access have been reviewed and/ or declassified under the Mandatory Review provisions of Executive Order 12958 and will be made available.

Previously restricted materials:

Volume: 1 cubic foot.

Public access to some of the items in the file segments listed in this notice will be restricted as outlined in 36 CFR 1275.50 or 1275.52 (Public Access Regulations).

Dated: March 13, 2002.

John W. Carlin,

Archivist of the United States.

[FR Doc. 02–6635 Filed 3–19–02; 8:45 am]

BILLING CODE 7515–01–P

NATIONAL COUNCIL ON DISABILITY

Advisory Committee Meeting/ Teleconference

AGENCY: National Council on Disability (NCD).

SUMMARY: This notice sets forth the schedule of the forthcoming meeting/ teleconference for NCD's Youth Advisory Committee, Notice of this meeting is required under section 10 (a)(1)(2) of the Federal Advisory Committee Act (Pub L. 92–463).

Youth Advisory Committee: The purposes of NCD's youth Advisory Committee is to provide input into NCD acitivites consistent with the values and goals of the Americans with Disabilities Act.

DATES: April 10, 2002, 4:00 p.m. EDT.

For youth advisory committee information, contact: Gerrie Drake Hawkins, Ph.D., Program Specialist, National Council on Disability, 1331 F Street NW, Suite 850, Washington, DC. 20004; 202–272–20004 (voice), 202–272–2074 (TTY), 202–272–2022 (fax), *ghawkins@ncd.gov* (e-mail).

AGENCY MISSION: The National Council on Disability is an independent federal agency composed of 15 members appointed by the President of the Untied States and confirmed by the U.S. Senate. Its overall purpose is to promote policies, programs, practices, and procedures that guarantee equal opportunity for all people with disabilities to achieve economic self-sufficiency, independent living, and inclusion and integration into all aspects of society.

This committee is necessary to provide advice and recommendations to NCD on disability issues.

We currently have a membership reflecting our nation's diversity and representing a variety of disabling conditions from across the United States.

Open Meeting: This advisory committee meeting/teleconference of the National Council on Disability will be open to the public. Those interested

in participating in the meeting/teleconference should contact the appropriate staff member listed above. Due to limited resources, only a few telephone lines will be available.

Records will be kept of all Youth Advisory Committee meetings/teleconferences and will be available after the meeting for public inspection at the National Council on Disaiblity.

Signed in Washington, DC, on March 15, 2002.

Ethel D. Briggs,

Executive Director.

[FR Doc. 02–6737 Filed 3–19–02; 8:45 am]

BILLING CODE 6820–MA–M

NUCLEAR REGULATORY COMMISSION

[Docket No. 50–286]

Entergy Nuclear Operations, Inc.; Notice of Withdrawal of Application for Amendment to Facility Operating License

The U.S. Nuclear Regulatory Commission (the Commission) has granted the request of Entergy Nuclear Operations, Inc. (the licensee) to withdraw its February 27, 2001, application for proposed amendment to Facility Operating License No. DPR–64 for the Indian Point Nuclear Generating Unit No. 2 (IP2), located in Westchester County, New York.

The proposed amendment would have revised the Technical Specifications (TSs) to change the mode applicability for certain engineered safety features and auxiliary electrical systems from the point of time when the reactor is made critical to when the average reactor coolant temperature is heated above 350 °F. The amendment would also have changed the associated action that must be taken when the TS conditions cannot be met to require a plant cooldown to below 350 °F.

The Commission had previously issued a Notice of Consideration of Issuance of Amendment published in the **Federal Register** on April 4, 2001 (66 FR 17965). However, by letter dated February 27, 2002, the licensee withdrew the proposed change.

Further details with respect to this action, see the application for amendment dated February 27, 2001, and the licensee's letter dated February 27, 2002, which withdrew the application for license amendment. Documents may be examined, and/or copied for a fee, at the NRC's Public Document Room, located at One White Flint North, 11555 Rockville Pike (first floor), Rockville, Maryland. Publicly available records will be accessible electronically from the Agencywide Documents Access and Management Systems (ADAMS) Public Electronic Reading Room on the internet at the NRC Web site, *http://www.nrc.gov/reading-rm.html.*

Persons who do not have access to ADAMS or who encounter problems in accessing the documents located in ADAMS, should contact the NRC Public Document Room (PDR) Reference staff by telephone at 1–800–397–4209, 301–415–4737 or by email to *pdr@nrc.gov.*

Dated at Rockville, Maryland, this 13th day of March 2002.

For the Nuclear Regulatory Commission.

Patrick D. Milano,

Sr. Project Manager, Section 1, Project Directorate, Division of Licensing Project Management, Office of Nuclear Reactor Regulation.

[FR Doc. 02–6689 Filed 3–19–02; 8:45 am]

BILLING CODE 7590–01–P

NUCLEAR REGULATORY COMMISSION

Advisory Committee on Reactor Safeguards: Subcommittee Meeting on Thermal-Hydraulic Phenomena; Notice of Meeting

The ACRS Subcommittee on Thermal-Hydraulic Phenomena will hold a meeting on April 23, 2002, Room T–2B3, 11545 Rockville Pike, Rockville, Maryland.

Portions of the meeting may be closed to public attendance to discuss General Electric proprietary information per 5 U.S.C. 552b(c)(4).

The agenda for the subject meeting shall be as follows: *Tuesday, April 23, 2002—8:30 a.m. until the conclusion of business.*

The Subcommittee will begin review of the application of the Carolina Power and Light Company for a core power uprate for the Brunswick Steam Electric Plant, Units 1 and 2. The purpose of this meeting is to gather information, analyze relevant issues and facts, and formulate proposed positions and actions, as appropriate, for deliberation by the full Committee.

Oral statements may be presented by members of the public with the concurrence of the Subcommittee Chairman. Written statements will be accepted and made available to the Committee. Electronic recordings will be permitted only during those portions of the meeting that are open to the public, and questions may be asked only by members of the Subcommittee, its consultants, and staff. Persons desiring to make oral statements should notify the Designated Federal Official named below five days prior to the meeting, if possible, so that appropriate arrangements can be made.

During the initial portion of the meeting, the Subcommittee, along with any of its consultants who may be present, may exchange preliminary views regarding matters to be considered during the balance of the meeting.

The Subcommittee will then hear presentations by and hold discussions with representatives of the NRC staff, the Carolina Power and Light Company, General Electric Nuclear Energy, and other interested persons regarding this review.

Further information regarding topics to be discussed, the scheduling of sessions open to the public, whether the meeting has been canceled or rescheduled, and the Chairman's ruling on requests for the opportunity to present oral statements and the time allotted therefor, can be obtained by contacting the Designated Federal Official, Mr. Paul A. Boehnert (telephone 301–415–8065) between 7:30 a.m. and 5 p.m. (EST). Persons planning to attend this meeting are urged to contact the above named individual one or two working days prior to the meeting to be advised of any potential changes to the agenda that may have occurred.

Dated: March 14, 2002.

Sher Bahadur,

Associate Director, for Technical Support.

[FR Doc. 02–6688 Filed 3–19–02; 8:45 am]

BILLING CODE 7590–01–P

NUCLEAR REGULATORY COMMISSION

Notice of Availability of Model Application Concerning Technical Specification Improvement To Eliminate Post Accident Sampling Requirements for Boiling Water Reactors Using the Consolidated Line Item Improvement Process

AGENCY: Nuclear Regulatory Commission.

ACTION: Notice of availability.

SUMMARY: Notice is hereby given that the staff of the Nuclear Regulatory Commission (NRC) has prepared a model application relating to the elimination of post accident sampling requirements for Boiling Water Reactors. The purpose of this model is to permit the NRC to efficiently process amendments that propose to remove requirements for Post Accident Sampling Stations (PASS) from

Technical Specifications (TS). Licensees of nuclear power reactors to which the model applies may request amendments utilizing the model application.

DATES: The NRC staff issued a **Federal Register** Notice (66 FR 66949, December 27, 2001) which provided a model safety evaluation (SE) and a model no significant hazards consideration (NSHC) determination relating to elimination of requirements for PASS for BWRs. The NRC staff hereby announces that the model SE and NSHC determination may be referenced in plant-specific applications to eliminate requirements for post accident sampling. The staff has posted a model application on the NRC web site to assist licensees in using the consolidated line item improvement process (CLIIP) to eliminate PASS-related TS. The NRC staff can most efficiently consider applications based upon the model application if the application is submitted within a year of this **Federal Register** Notice.

FOR FURTHER INFORMATION CONTACT: Robert Dennig, Mail Stop: O–12H4, Division of Regulatory Improvement Programs, Office of Nuclear Reactor Regulation, U.S. Nuclear Regulatory Commission, Washington, DC 20555–0001, telephone 301–415–1161.

SUPPLEMENTARY INFORMATION:

Background

Regulatory Issue Summary 2000–06, ''Consolidated Line Item Improvement Process for Adopting Standard Technical Specification Changes for Power Reactors,'' was issued on March 20, 2000. The CLIIP is intended to improve the efficiency of NRC licensing processes. This is accomplished by processing proposed changes to the standard technical specifications (STS) in a manner that supports subsequent license amendment applications. The CLIIP includes an opportunity for the public to comment on proposed changes to the STS following a preliminary assessment by the NRC staff and finding that the change will likely be offered for adoption by licensees. The CLIIP directs the NRC staff to evaluate any comments received for a proposed change to the STS and to either reconsider the change or to proceed with announcing the availability of the change for proposed adoption by licensees. Those licensees opting to apply for the subject change to TS are responsible for reviewing the staff's evaluation, referencing the applicable technical justifications, and providing any necessary plant-specific information. Each amendment application made in response to the notice of availability will be processed and noticed in accordance with applicable rules and NRC procedures.

This notice involves the elimination of requirements for PASS and related administrative controls in TS for BWRs. This proposed change was proposed for incorporation into the STS by the BWR Owners Group (BWROG) participants in the Technical Specification Task Force (TSTF) and is designated TSTF–413. TSTF–413 is supported by the NRC staff's SE dated June 12, 2001, for the BWROG topical report NEDO–32991, ''Regulatory Relaxation for BWR Post Accident Sampling Stations (PASS),'' which was submitted to the NRC on November 30, 2000. The BWROG request followed the staff's approval of similar requests for elimination of PASS requirements from the Combustion Engineering Owners Group (CEOG) and the Westinghouse Owners Group (WOG). TSTF–413 can be viewed on the NRC Web site, www.nrc.gov.

Applicability

This proposed change to remove requirements for PASS from TS (and other elements of the licensing bases) is applicable to BWRs.

To efficiently process the incoming license amendment applications, the staff requests each licensee applying for the changes addressed by TSTF–413 using the CLIIP to address the following plant-specific verifications and regulatory commitments. The CLIIP does not prevent licensees from requesting an alternative approach or proposing the changes without the requested verifications and regulatory commitments. Variations from the approach recommended in this notice may, however, require additional review by the NRC staff and may increase the time and resources needed for the review. In making the requested regulatory commitments, each licensee should address: (1) That the subject capability exists (or will be developed) and will be maintained; (2) where the capability or procedure will be described (*e.g.,* severe accident management guidelines, emergency operating procedures, emergency plan implementing procedures); and (3) a schedule for implementation. The amendment request need not provide details about designs or procedures.

Each licensee should verify that it has, and make a regulatory commitment to maintain (or make a regulatory commitment to develop and maintain):

a. Contingency plans for obtaining and analyzing highly radioactive samples from the reactor coolant system, suppression pool, and containment atmosphere;

b. A capability for classifying fuel damage events at the Alert level threshold (typically this is 300 μCi/ml dose equivalent iodine). This capability may use a normal sampling system or correlations of radiation readings to coolant concentrations; and

c. an I–131 site survey detection capability, including an ability to assess radioactive iodines released to offsite environs, by using effluent monitoring systems or portable sampling equipment.

Public Notices

In a notice in the **Federal Register** dated December 27, 2001 (66 FR 66949), the staff requested comment on the use of the CLIIP to process requests to delete post-accident sampling requirements from BWRs. The staff had previously issued a notice of availability (65 FR 65018, October 31, 2000) on the use of the CLIIP to process requests to delete post-accident sampling requirements from plants with Westinghouse and Combustion Engineering designs. The notice of availability for Westinghouse and Combustion Engineering plants followed the staff's disposition of comments received in response to a notice requesting comment (65 FR 49271, August 11, 2000). Each request to eliminate PASS requirements by licensees for Westinghouse and CE plants using the CLIIP has also included notices prior to issuance of the subject license amendments and upon issuance.

TSTF–413, as well as the NRC staff's safety evaluation and model application, may be examined, and/or copied for a fee, at the NRC/s Public Document Room, located at One White Flint North, 11555 Rockville Pike (first floor), Rockville, Maryland. Publicly available records are accessible electronically from the ADAMS Public Library component on the NRC Web site, (the Electronic Reading Room).

The staff did not receive comments following the notice soliciting comments about modifying the TS requirements regarding post accident sampling for BWRs. The staff has made some minor changes to the model safety evaluation as a result of internal reviews. A specific change involves the paragraph that read:

> The staff notes that redundant, safety-grade, containment hydrogen concentration monitors are required by 10 CFR 50.44(b)(1), are addressed in NUREG–0737 Item II.F.1 and Regulatory Guide 1.97, and are relied upon to meet the data reporting requirements of 10 CFR part 50, Appendix E, Section VI.2.a.(ii)(3). The staff concludes that during the early phases of an accident, the safety-grade hydrogen monitors provide an adequate capability for monitoring

containment hydrogen concentration. The staff sees value in maintaining the capability to obtain grab samples for complementing the information from the hydrogen monitors. * * *

The revised paragraph reads as follows:

The staff notes that containment hydrogen concentration monitors are required by 10 CFR 50.44 and are relied upon to meet the data reporting requirements of 10 CFR part 50, Appendix E, Section VI.2.a.(ii)(3). The staff concludes that these hydrogen monitors provide an adequate capability for monitoring containment hydrogen concentration during the early phases of an accident. The staff sees value in maintaining the capability to obtain grab samples for complementing the information from the hydrogen monitors. * * *

The change was made to reflect a likely revision to the requirements in 10 CFR 50.44 and does not significantly affect the technical basis of the staff's findings or revise the verifications and commitments identified in the model SE.

As described in the model application prepared by the staff, licensees may reference in their plant-specific applications to eliminate PASS-related TS the SE (as revised above), NSHC determination, and environmental assessment previously published in the **Federal Register** (66 FR 66949, December 27, 2001).

Dated at Rockville, Maryland, this 13th day of March 2002.

For the Nuclear Regulatory Commission.

William D. Beckner,

Program Director, Operating Reactor Improvements, Division of Regulatory Improvement Programs, Office of Nuclear Reactor Regulation.

[FR Doc. 02–6690 Filed 3–19–02; 8:45 am]

BILLING CODE 7590–01–P

SECURITIES AND EXCHANGE COMMISSION

[File No. 500–1]

A.C.L.N. Ltd.; Order of Suspension of Trading

It appears to the Securities and Exchange Commission (''Commission''), based on information provided to the Commission staff, that there is a lack of adequate and accurate information concerning the management, business practices and results of operations of A.C.L.N. Ltd. (''ACLN''), of Limassol, Cyprus and Antwerp, Belgium. The securities of ACLN are registered with the Commission pursuant to section 12(b) of the Securities Exchange Act of 1934 (''Exchange Act''). Its common stock is listed for trading on the New York Stock Exchange under the symbol ASW, and its options are traded through the Amex system. Information has been provided to the Commission staff raising concerns as to the adequacy and accuracy of ACLN's publicly disseminated information concerning, among other things, the following:

- The bases for ACLN's financial and other disclosure, as contained in its annual report on Form 20–F for the fiscal year ended December 31, 2000 (''2000 Form 20–F''), report on Form 6–K for the quarter ending September 30, 2001 and other public statements, concerning the revenue and income obtained by ACLN from its new car wholesale business, the volume of that business and the source of the cars sold;
- The bases for ACLN's financial and other public disclosure in its 2000 Form 20–F and in its December 21, 2001 press release concerning the ownership of the shipping vessel, the Sea Atef, and the bases under generally accepted accounting principles for claiming it as a $5.5 million asset, even though documents of title indicate that the vessel is jointly owned by persons or entities other than ACLN;
- The bases for ACLN's financial and other disclosure in its report on Form 6–K for the quarter ending September 30, 2001 concerning the revenue and income ACLN obtained from arranging the transportation of used cars, including its reported increase of approximately $60 million in revenue for the first nine months of 2001 over the same period of 2000;
- The bases for the statements in ACLN's February 5, 2002 press release announcing that it had acquired a majority interest in five companies, each of which owns a ''pure car and truck carrier vessel;''
- The business relationship and the nature of all financial transactions between ACLN and Matina Forwarding and Trading, also known as MFT;
- The source and subsequent use of funds claimed by ACLN as a corporate asset on its financial statements for the fiscal year ending December 31, 2000 and the fiscal quarter ending September 30, 2001, and deposited at the BNP Paribas Bank, Luxembourg; and
- The bases for the nondisclosure in any Commission filing the warrant issued by Tunisian authorities for the arrest of Abderrazak Labiadh, ACLN's President, CEO, and Managing Director, for allegedly misappropriating funds from a Tunisian company he founded.

The Commission is of the opinion that the public interest and the protection of investors require a suspension of trading in the securities of ACLN.

Therefore, it is ordered that, pursuant to section 12(k) of the Exchange Act, trading in the securities of ACLN is suspended for the period from 9:30 a.m. EST, March 18, 2002, through 11:59 p.m. EST, on April 1, 2002.

The Commission cautions broker-dealers and current and prospective holders of ACLN securities that they should carefully consider the foregoing information along with all other currently available information and any information subsequently issued by ACLN.

Further, brokers and dealers should be aware of the requirements of Rule 15c2–11 under the Exchange Act to the initiation of quotations at the termination of the trading suspension. Any broker or dealer having any questions as to whether or not the rule applies or whether the broker or dealer has complied with the rule should not enter any quotation but immediately contact the staff of the Securities and Exchange Commission in Washington, D.C.

Any broker or dealer uncertain as to what is required by Rule 15c2–11, should refrain from entering quotations relating to the securities of ACLN until such time as that broker or dealer is familiar with the rule and is certain that all of its provisions have been met. If any broker or dealer enters any quotation for the stock of ACLN that is in violation of the rule, the Commission will consider the need for prompt enforcement action.

By the Commission.

Jill M. Peterson,

Assistant Secretary.

[FR Doc. 02–6819 Filed 3–18–02; 11:42 am]

BILLING CODE 8010–01–M

SECURITIES AND EXCHANGE COMMISSION

[Release No. 34–45543; File No. SR–CBOE–2002–02]

Self-Regulatory Organizations; Notice of Filing of Proposed Rule Change by the Chicago Board Options Exchange, Inc. Relating to the Permanent Adoption of Decimal Pricing and the Establishment of Minimum Price Variations for Quoting in Equity Securities and Options

March 12, 2002.

Pursuant to section 19(b)(1) of the Securities Exchange Act of 1934 (''Act''),[1] and Rule 19b-4 thereunder,[2] notice is hereby given that on January

[1] 15 U.S.C. 78s(b)(1).

[2] 17 CFR 240.19b–4.

14, 2002, the Chicago Board Options Exchange, Inc. (''CBOE'' or ''Exchange'') filed with the Securities and Exchange Commission (''Commission'') the proposed rule change as described in Items I, II, and III below, which Items have been prepared by the CBOE. The Commission is publishing this notice to solicit comments on the proposed rule change from interested persons.

I. Self-Regulatory Organization's Statement of the Terms of Substance of the Proposed Rule Change

The CBOE proposes to amend its rules to establish minimum price variations (''MPVs''). The text of the proposed rule change is available at the CBOE and at the Commission.

II. Self-Regulatory Organization's Statement of the Purpose of, and Statutory Basis for, the Proposed Rule Change

In its filing with the Commission, the Exchange included statements concerning the purpose of, and basis for, the proposed rule change and discussed any comments it received on the proposed rule change. The text of these statements may be examined at the places specified in Item IV below. The Exchange has prepared summaries, set forth in Sections A, B, and C below, of the most significant aspects of such statements.

A. Self-Regulatory Organization's Statement of the Purpose of, and Statutory Basis for, the Proposed Rule Change

1. Purpose

On September 25, 2001, the Commission issued an order requiring the securities exchanges and the NASD to submit their own respective rule filings to establish MPVs for quoting equity securities and options by January 14, 2002.[3] The CBOE now proposes to formally adopt the MPVs currently in place on the Exchange.

As part of the industry conversion to decimal pricing and pursuant to the Decimals Implementation Plan for the Equities and Options Markets submitted to the Commission on July 26, 2000 (the ''Plan''),[4] the Exchange adopted the following MPV schedule for quoting: a five cent MPV for option issues quoted under $3 a contract; a ten cent MPV for option issues quoted at $3 a contract or greater; and a one cent MPV for the quoting of CBOE's equity products. The Plan, including the MPVs adopted under the Plan, remains in effect until the Commission approves rules submitted by each exchange and the NASD designating each market's MPVs. The Exchange seeks to designate the MPVs utilized under the Plan as its minimum increments.

The proposed rule change also provides that future changes to the Exchange's MPVs would be handled as they were handled before the conversion to decimal pricing, namely that the CBOE Board of Directors may determine to change the minimum increments and that the Exchange will designate any such change as a stated policy, practice, or interpretation with respect to the administration of the CBOE minimum increment rule for bids and offers (CBOE Rule 6.42) within the meaning of section 19(b)(3)(A) of the Exchange Act[5] and will file a rule change for effectiveness upon filing with the Commission. Lastly, the Exchange also seeks to formally eliminate CBOE Rule 15.11 (Mandatory Year 2000 Testing) and CBOE Rule 15.22 (Mandatory Decimal Pricing Testing), both of which have expired.

2. Statutory Basis

The Exchange believes that the proposed rule change is consistent with section 6(b) of the Act[6] in general, and furthers the objectives of section 6(b)(5) of the Act[7] in particular, in that it should promote just and equitable principles of trade, serve to remove impediments to and perfect the mechanism of a free and open market and a national market system, and protect investors and the public interest.

B. Self-Regulatory Organization's Statement on Burden on Competition

The Exchange does not believe that the proposed rule change will impose any burden on competition.

C. Self-Regulatory Organization's Statement on Comments on the Proposed Rule Change Received From Members, Participants, or Others

No written comments were solicited or received with respect to the proposed rule change.

III. Date of Effectiveness of the Proposed Rule Change and Timing for Commission Action

Within 35 days of the date of publication of this notice in the **Federal Register** or within such longer period (i) as the Commission may designate up to 90 days of such date if it finds such longer period to be appropriate and publishes its reasons for so finding, or (ii) as to which the Exchange consents, the Commission will:

(A) By order approve such proposed rule change; or

(B) Institute proceedings to determine whether the proposed rule change should be disapproved.

IV. Solicitation of Comments

Interested persons are invited to submit written data, views, and arguments concerning the foregoing, including whether the proposed rule change is consistent with the Act. Persons making written submissions should file six copies thereof with the Secretary, Securities and Exchange Commission, 450 Fifth Street, NW, Washington, DC 20549–0609. Copies of the submission, all subsequent amendments, all written statements with respect to the proposed rule change that are filed with the Commission, and all written communications relating to the proposed rule change between the Commission and any person, other than those that may be withheld from the public in accordance with the provisions of 5 U.S.C. 552, will be available for inspection and copying in the Commission's Public Reference Room. Copies of the filing will also be available for inspection and copying at the principal offices of the Exchange. All submissions should refer to File No. SR–CBOE–2002–02 and should be submitted by April 10, 2002.

For the Commission, by the Division of Market Regulation, pursuant to delegated authority.[8]

Margaret H. McFarland,

Deputy Secretary.

[FR Doc. 02–6642 Filed 3–19–02; 8:45 am]

BILLING CODE 8010–01–P

[3] *See* Securities Exchange Act Release No. 44846 (September 25, 2001), 66 FR 49983 (October 1, 2001).

[4] *See* letter from Dennis L. Covelli, Vice President, New York Stock Exchange, Inc. to Annette Nazareth, Director, Division of Market Regulation, Commission, dated July 25, 2000.

[5] 15 U.S.C. 78s(b)(3)(A).

[6] 15 U.S.C. 78f(b).

[7] 15 U.S.C. 78f(b)(5).

[8] 17 CFR 200.30–3(a)(12).

SECURITIES AND EXCHANGE COMMISSION

[Release No. 34–45562; File No. SR–MSRB–2001–08]

Self-Regulatory Organizations; Municipal Securities Rulemaking Board; Order Granting Approval of Proposed Rule Change Relating to Official Communications, Pursuant to MSRB Rules G–15 and G–8

March 14, 2002.

On November 6, 2001, the Municipal Securities Rulemaking Board (''MSRB'')

filed with the Securities and Exchange Commission (''Commission'') a proposed rule change (File No. SR–MSRB–2001–08) (the ''proposed rule change'') relating to official communications under Rules G–15 and G–8. The MSRB submited the proposed rule change pursuant to Section 19(b)(1) of the Securities Exchange Act of 1934 (''Exchange Act'') and Rule 19b–4 thereunder.[1]

The Commission published the proposed rule change for comment in the **Federal Register** on February 8, 2001.[2] The Commission received no comment letters regarding the forgoing proposal. This order approves the proposal.

I. Description of the Proposed Rule Change

The MSRB's proposed rule change amended Rule G–15 on confirmation, clearance and settlement of transactions with customers and Rule G–8 on books and records. The proposed rule change requires brokers, dealers and municipal securities dealers (collectively ''dealers'') that safekeep municipal securities to retransmit official documents about municipal securities issues to their safekeeping clients under certain conditions. The amendment to Rule G–15 provides that, upon request for retransmission, dealers who serve as safekeeping agents must undertake ''reasonable efforts'' to retransmit ''official communications'[3] to their safekeeping clients. For their retransmission efforts, the amendment provides that dealers receive ''adequate compensation'.[4] Without an offer of adequate compensation, dealers are not required to effect the retransmission.

The proposed amendment includes a ''compensation threshold''. For retransmission where the total compensation sought will be less than $500, the dealer should begin retransmitting immediately and ask for the calculated compensation concurrently. For retransmission where the total compensation sought will be greater than $500, the dealer may chose instead to promptly contact the party offering compensation, inform it of the amount of compensation required, obtain specific agreement on the amount of compensation and wait for receipt of such compensation prior to proceeding with the retransmission.

In addition, the amendment allows dealers in certain circumstances to send to the party requesting an official communication retransmission a list of beneficial owners who do not object to the disclosure of their name, contact information and security positions (''non-objecting beneficial owners'') in lieu of retransmitting documents. The customer account information amendment to Rule G–8 ensures that dealers retain an official record of a customer's written authorization, if any, as to the customer's status as a non-objecting beneficial owner.

The MSRB realizes that some dealers today retransmit documents to their customers voluntarily, or under specific terms of their safekeeping agreements, and in many cases do so without compensation from the party requesting retransmission. It is not the intent of the proposed rule change to discourage retransmissions of official communications in these cases. Rather, the purpose of the proposed rule change is to ensure that parties needing to transmit official communications to beneficial owners may rely on dealers undertaking reasonable efforts, under the explicit terms of Rules G–15 and G–8, to retransmit such official communications and maintain appropriate records.

II. Discussion

The MSRB believes that the proposed rule filing, relating to official communications, will promote just and equitable principles of trade and fosters an open market for municipal securities. Additionally, the MSRB believes that the proposed rule change will not impose any burden on competition not necessary or appropriate in furtherance of the purposes of the Exchange Act since it applies equally to all dealers in municipal securities.

The Commission must approve a proposed MSRB rule change if the Commission finds that the MSRB's proposal is consistent with the requirements of the Exchange Act and the rules and regulations thereunder that govern the MSRB.[5] The language of Section 15(b)(2)(C) of the Exchange Act requires that the MSRB's rules must be designed to prevent fraudulent and manipulative acts and practices, to promote just and equitable principals of trade, to foster cooperation and coordination with persons engaged in regulating, settling, processing information with respect to, and facilitating transactions in securities, to remove impediments to and perfect the mechanism of a free and open market and a national system, and, in general, to protect investors and the public interest.[6]

After careful review, the Commission finds that the MSRB's proposed rule change relating to official communications meets this standard. The Commission believes that this proposed rule change is consistent with the requirements of the Exchange Act, and the rules and regulations thereunder. In particular, the Commission finds that the proposed rule is consistent with the requirements of Section 15B(b)(2)(C) of the Exchange Act, set forth above.

III. Conclusion

It is therefore ordered, pursuant to Section 19(b)(2) of the Exchange Act that the proposed rule change (File No. SR–MSRB–2001–08) be, and hereby is, approved.

For the Commission, by the Division of Market Regulation, pursuant to delegated authority.[7]

Margaret H. McFarland,

Deputy Secretary.

[FR Doc. 02–6715 Filed 3–19–02; 8:45 am]

BILLING CODE 8010–01–P

[1] 15 U.S.C. 78s(b)(1) and 17 CFR 240.19b–4 thereunder.

[2] *See* Release No. 34–45363 (January 30, 2002), 67 FR 6067.

[3] The proposed rule change defines an ''official communication'' as a document or collection of documents addressed to beneficial owners that was prepared or authorized by an issuer of municipal securities, a trustee for an issue of municipal securities, a state or federal tax authority or a custody agent for a stripped coupon municipal securities program in its capacity as custody agent. *See* Release No. 34–45363 (January 30, 2002), 67 FR 6067.

[4] Rule G–15 does not provide specific guidance to define adequate compensation; however, the proposed rule change references the rates of compensation for transmittal of documents detailed in NASD interpretation IM–2260, on Suggested Rates of Reimbursement, relating to forwarding of proxy and other materials. *See id.*; *see also NASD Manual* (CCH) ¶ 4233. As under NASD Rule 2260, compensation under Rule G–15 is intended to reimburse a dealer for its out of pocket expenses, including reasonable clerical expenses, associated with the particular retransmission. *See NASD Manual* (CCH) ¶ 4231.

[5] Additionally, in approving this rule, the Commission notes that it has considered the proposed rule's impact on efficiency, competition, and capital formation. 15 U.S.C. 78c(f).

[6] 15 U.S.C. 78o–4(b)(2)(c).

[7] 17 CFR 200.30–3(a)(12).

SECURITIES AND EXCHANGE COMMISSION

[Release No. 34–45547; File No. SR–NYSE–2002–12]

Self-Regulatory Organizations; Notice of Filing of Proposed Rule Change by the New York Stock Exchange, Inc. to Eliminate References to Quoting in Fractions

March 12, 2002.

Pursuant to section 19(b)(1) of the Securities Exchange Act of 1934 (''Act''),[1] and Rule 19b–4 thereunder,[2] notice is hereby given that on March 5,

[1] 15 U.S.C. 78s(b)(1).

[2] 17 CFR 240.19b–4.

2002, the New York Stock Exchange, Inc. (''NYSE'' or ''Exchange'') filed with the Securities and Exchange Commission (''Commission'') the proposed rule change as described in Items I, II, and III below, which Items have been prepared by the NYSE. The Commission is publishing this notice to solicit comments on the proposed rule change from interested persons.

I. Self-Regulatory Organization's Statement of the Terms of Substance of the Proposed Rule Change

The NYSE proposes to amend its rules to eliminate references to fractional pricing increments and to make such rules compatible with quoting in decimals. The text of the proposed rule change is available at the NYSE and at the Commission.

II. Self-Regulatory Organization's Statement of the Purpose of, and Statutory Basis for, the Proposed Rule Change

In its filing with the Commission, the Exchange included statements concerning the purpose of, and basis for, the proposed rule change and discussed any comments it received on the proposed rule change. The text of these statements may be examined at the places specified in Item IV below. The Exchange has prepared summaries, set forth in Sections A, B, and C below, of the most significant aspects of such statements.

A. Self-Regulatory Organization's Statement of the Purpose of, and Statutory Basis for, the Proposed Rule Change

1. Purpose

The Exchange proposes to amend its rules to change references to fractional pricing increments to decimal pricing of equities as described herein. This submission is in accordance with the Commission's order [3] requiring self-regulatory organizations to submit rule filings regarding decimal pricing pursuant to section 19(b)(2) of the Act.[4] The Commission previously reviewed the Exchange's filing proposing amendments to Exchange rules to accommodate phasing in the quoting of decimals commencing August 28, 2000.[5] The Exchange completed the conversion to quoting all listed stocks in decimals on January 29, 2001.

In SR–NYSE–2000–22,[6] the Exchange proposed a Minimum Price Variation (''MPV'') of one cent (0.01) for equities. The Exchange proposes to continue the MPV for equities of one cent (0.01). The rule changes proposed herein, therefore, primarily delete references to quoting in fractions that were retained in Exchange rules to accommodate securities that continued quoting in fractions during the phase in of full decimalization.

Summary of Rule Amendments: Other rules proposed to be amended are summarized below.

Rule 15 (ITS and Pre-Opening Application). The changes to Rule 15 remove references to fractions in the sections dealing with Intermarket Trading System procedures for openings.

Rule 64 (Bonds, Rights and 100 Share-Unit Stocks). Floor Official approval must be obtained for a non-regular way trade that is 2/16 or .10 away from the regular way bid or offer. For trades during the last calendar week of the year, the approval level is ¼ or .25. The fractional references will be removed.

Rule 72(b) (Clean Agency Cross). Decimals will replace fractions used in the two examples.

Rule 79A.30 (Miscellaneous Requirements on Stock and Bond Market Procedures). Examples in fractions will be deleted.

Rule 105 (Guidelines For Specialists' Specialty Stock Option Transactions Pursuant to Rule 105). References to fractions in the example will be deleted.

Rule 123A.30 (Percentage Orders). Percentage orders may be converted on a destabilizing tick if the order meets certain requirements of size (10,000 shares or more or $500,000 in market value) and the execution price of the converted percentage order is no more than ¼ or .25 point away from the last sale. Percentage orders may also be converted on a destabilizing tick to narrow a quotation spread as long as the bid is no more than ⅛ or .10 higher than the last sale. The ⅛ and ¼ parameters will be removed.

Rule 123A.40 (Stop Orders). Floor Official approval must be obtained when a specialist's transaction for his or her own account elects stop orders and the transaction is more than 2/16 or .10 away from the previous transaction. The 2/16 parameter will be removed.

Rule 192 (Part-Paid Securities). Examples in fractions will be deleted.

Rule 440B.15 (Short Sale Rule Interpretations). The examples in the last paragraph that delineate the prices at which short sales may be made are amended to show a one cent MPV for stocks.

2. Statutory Basis

The Exchange believes that the proposed rule change is consistent with the objectives of section 6(b)(5) of the Act,[7] which requires an exchange to have rules that are designed to prevent fraudulent and manipulative acts and practices, to promote just and equitable principles of trade, to remove impediments to and perfect the mechanism of a free and open market and a national market system and, in general, to protect investors and the public interest.

B. Self-Regulatory Organization's Statement on Burden on Competition

The Exchange does not believe that the proposed rule change will impose any burden on competition that is not necessary or appropriate in furtherance of the purposes of the Act.

C. Self-Regulatory Organization's Statement on Comments on the Proposed Rule Change Received From Members, Participants, or Others

No written comments were solicited or received with respect to the proposed rule change.

III. Date of Effectiveness of the Proposed Rule Change and Timing for Commission Action

Within 35 days of the date of publication of this notice in the **Federal Register** or within such longer period (i) as the Commission may designate up to 90 days of such date if it finds such longer period to be appropriate and publishes its reasons for so finding, or (ii) as to which the Exchange consents, the Commission will:

(A) By order approve such proposed rule change; or

(B) Institute proceedings to determine whether the proposed rule change should be disapproved.

IV. Solicitation of Comments

Interested persons are invited to submit written data, views, and arguments concerning the foregoing, including whether the proposed rule change is consistent with the Act. Persons making written submissions should file six copies thereof with the Secretary, Securities and Exchange Commission, 450 Fifth Street, NW, Washington, DC 20549–0609. Copies of the submission, all subsequent amendments, all written statements with respect to the proposed rule change that are filed with the

[3] *See* Securities Exchange Act Release No. 44846 (September 25, 2001), 66 FR 49983 (October 1, 2001).

[4] 15 U.S.C. 78s(b)(2).

[5] *See* Securities Exchange Act Release No. 43230 (August 30, 2000), 65 FR 54589 (September 8, 2000) (SR–NYSE–2000–22).

[6] *Id.*

[7] 15 U.S.C. 78f(b)(5).

Commission, and all written communications relating to the proposed rule change between the Commission and any person, other than those that may be withheld from the public in accordance with the provisions of 5 U.S.C. 552, will be available for inspection and copying in the Commission's Public Reference Room. Copies of the filing will also be available for inspection and copying at the principal offices of the Exchange. All submissions should refer to File No. SR–NYSE–2002–12 and should be submitted by April 10, 2002.

For the Commission, by the Division of Market Regulation, pursuant to delegated authority.[8]

Margaret H. McFarland,

Deputy Secretary.

[FR Doc. 02–6641 Filed 3–19–02; 8:45 am]

BILLING CODE 8010–01–P

SOCIAL SECURITY ADMINISTRATION

The Ticket To Work and Work Incentives Advisory Panel Teleconferences

AGENCY: Social Security Administration (SSA).

ACTION: Notice of Teleconferences.

DATES: Wednesday April 3, 2002 and Tuesday April 9, 2002.

TELECONFERENCES: Wednesday April 3, 2002, 1:30 PM to 3:30 PM and Tuesday April 9, 2002, 1:30 PM to 3:30 PM.

Ticket To Work and Work Incentives Advisory Panel Conference Calls

Call-in number: 888–603–9224.
Pass code: 11212.
Leader/Host: Sarah Wiggins Mitchell.

SUPPLEMENTARY INFORMATION:

Type of meeting: These teleconference meetings are open to the public. The interested public is invited to participate by calling into the teleconference at the number listed above. Public testimony will not be taken.

Purpose: In accordance with section 10(a)(2) of the Federal Advisory Committee Act, the Social Security Administration (SSA) announces this teleconference meeting of the Ticket to Work and Work Incentives Advisory Panel (the Panel). Section 101(f) of Public Law 106–170 establishes the Panel to advise the Commissioner of SSA, the President, and the Congress on issues related to work incentives programs, planning and assistance for individuals with disabilities as provided under section 101(f)(2)(A) of the TWWIIA. The Panel is also to advise the Commissioner on matters specified in section 101(f)(2)(B) of that Act, including certain issues related to the Ticket to Work and Self-Sufficiency Program established under section 101(a) of that Act.

Agenda: The Panel will deliberate on the implementation of TWWIIA and conduct administrative business. Topics of discussion on April 3, 2002 will include a briefing and discussion on issues related to forthcoming regulatory packages on certain provisions of TWWIIA, including Protection & Advocacy, Expedited Reinstatement, Continuing Disability Review Protection and referrals to Vocational Rehabilitation. Topics of discussion on April 9, 2002 and will include deliberations on the Panel's Annual Report and Progress Report on the Ticket to Work Program. The agenda for these meetings will posted on the Internet at *http://www.ssa.gov/work/panel/* one week prior to each teleconference or can be received in advance electronically or by fax upon request.

Contact Information: Records are being kept of all Panel proceedings and will be available for public inspection by appointment at the Panel office. Anyone requiring information regarding the Panel should contact the TWWIIA Panel staff by:

- mail addressed to Ticket to Work and Work Incentives Advisory Panel Staff, Social Security Administration, 400 Virginia Avenue, SW, Suite 700, Washington, DC, 20024;
- telephone contact with Kristen Breland at (202) 358–6430;
- fax at (202) 358–6440;
- or e-mail to *TWWIIAPanel@ssa.gov*

Dated: March 14, 2002.

Deborah M. Morrison,

Designated Federal Officer.

[FR Doc. 02–6816 Filed 3–19–02; 8:45 am]

BILLING CODE 4191–02–U

DEPARTMENT OF STATE

[Public Notice 3949]

Determination: Assistance for the Implementation Monitoring Committee To Implement the Burundi Peace Process

Pursuant to section 451 of the Foreign Assistance Act of 1961, as amended, (the ''Act'') (22 U.S.C. 2261) and section 1–100 of Executive Order 12163, as amended, I hereby authorize, notwithstanding any other provision of law, the use of up to $1,000,000 in FY 2001 funds made available under Chapter 4 of Part II of the Act, in order to provide assistance authorized by Part I of the Act to support the Implementation Monitoring Committee provided for in the August 2000 Arusha Peace and Reconciliation Agreement for Burundi to help implement the Burundi peace agreement.

This Determination shall be reported to Congress promptly and published in the **Federal Register**.

Dated: March 11, 2002.

Colin L. Powell,

Secretary of State, Department of State.

[FR Doc. 02–6720 Filed 3–19–02; 8:45 am]

BILLING CODE 4710–10–P

DEPARTMENT OF TRANSPORTATION

Federal Aviation Administration

[Summary Notice No. PE–2002–16]

Petitions for Exemption

AGENCY: Federal Aviation Administration (FAA), DOT.

ACTION: Notice of dispositions of prior petitions.

SUMMARY: Pursuant to FAA's rulemaking provisions governing the application, processing, and disposition of petitions for exemption part 11 of Title 14, Code of Federal Regulations (14 CFR), this notice contains a summary of dispositions of petitions previously received. The purpose of this notice is to improve the public's awareness of, and participation in, this aspect of FAA's regulatory activities. Neither publication of this notice nor the inclusion or omission of information in the summary is intended to affect the legal status of any petition or its final disposition.

FOR FURTHER INFORMATION CONTACT: Denise Emrick (202) 267–5174, Office of Rulemaking (ARM–1), Federal Aviation Administration, 800 Independence Avenue, SW., Washington, DC 20591.

This notice is published pursuant to 14 CFR 11.85 and 11.91.

Issued in Washington, DC, on March 14, 2002.

Donald P. Byrne,

Assistant Chief Counsel for Regulation.

Disposition of Petitions

Docket No.: FAA–2002–11494.
Petitioner: Segrave Aviation, Inc.
Section of 14 CFR Affected: 14 CFR § 135.143(c)(2).
Description of Relief Sought/Disposition: To permit Segrave to operate certain aircraft under part 135

[8] 17 CFR 200.30–3(a)(12).

without a TSO–C112 (Mode S) transponder installed in the aircraft. *Grant, 02/14/2002, Exemption No. 7723.*

Docket No.: FAA–2002–11493
Petitioner: Central Copters, Inc.
Section of 14 CFR Affected: 14 CFR § 135.143(c)(2).
Description of Relief Sought/ Disposition: To permit Central Copters to operate certain aircraft under part 135 without a TSO–C112 (Mode S) transponder installed on the aircraft. *Grant, 02/14/2002, Exemption No. 7724.*

Docket No.: FAA–2002–11497
Petitioner: Eagle Aviation Academy.
Section of 14 CFR Affected: 14 CFR § 135.143(c)(2).
Description of Relief Sought/ Disposition: To permit Eagle Aviation Academy to operate certain aircraft under part 135 without a TSO–C112 (Mode S) transponder installed on the aircraft. *Grant, 02/14/2002, Exemption No. 7725.*

Docket No.: FAA–2002–11553.
Petitioner: Air One Express, Inc.
Section of 14 CFR Affected: 14 CFR § 135.143(c)(2).
Description of Relief Sought/ Disposition: To permit Air One to operate certain aircraft under part 135 without a TSO–C112 (Mode S) transponder installed on the aircraft. *Grant, 02/14/2002, Exemption No. 7726.*

Docket No.: FAA–2002–11560.
Petitioner: Global Air Charter, Inc.
Section of 14 CFR Affected: 14 CFR § 135.143(c)(2).
Description of Relief Sought/ Disposition: To permit Global Air Charter to operate certain aircraft under part 135 without a TSO–C–112 (Mode S) transponder installed on the aircraft. *Grant, 02/14/2002, Exemption No. 7722.*

Docket No.: FAA–2002–11499.
Petitioner: Mr. Randy L. Bailey.
Section of 14 CFR Affected: 14 CFR § 91.109 (a) and (b)(3).
Description of Relief Sought/ Disposition: To permit Mr. Bailey to conduct certain flight instruction and simulated instrument flights to meet the recent experience requirements in Beechcraft Bonanza, Baron, and Travel Air airplanes equipped with a functioning throwover control wheel in place of functioning dual controls. *Grant, 02/25/2002, Exemption No. 7734.*

Docket No.: FAA–2002–11591.
Petitioner: Aircraft Owners and Pilots Association.
Section of 14 CFR Affected: 14 CFR §§ 135.251, 135.255, and 135.353, and appendixes I and J to part 121.
Description of Relief Sought/ Disposition: To permit Aircraft Owners and Pilots Association member pilots to conduct local sightseeing flights at charity or community events, for compensation or hire, without complying with certain anti-drug and alcohol misuse prevention program requirements of part 135. *Grant, 02/28/ 2002, Exemption No. 7112B (Previously Docket No. 29648).*

Docket No.: FAA–2001–11090.
Petitioner: Army Aviation Heritage Foundation.
Section of 14 CFR Affected: 14 CFR §§ 91.319, 119.5(g), and 119.25(b).
Description of Relief Sought/ Disposition: To permit the Army Aviation Heritage Foundation to operate its former military UH–1H helicopter that holds an experimental airworthiness certificate for the purpose of carrying passengers on local educational flights. *Grant, 03/04/2002, Exemption No. 7736.*

Docket No.: FAA–2002–11355.
Petitioner: Embry Riddle Aeronautical University.
Section of 14 CFR Affected: 14 CFR § 61.71(a).
Description of Relief Sought/ Disposition: To permit the commercial pilot certification practical tests that two Embry Riddle students successfully completed to be valid although the completion dates of the exams exceeded the required 60-day period from their graduation date due to the flight restrictions put in place after the events that took place on September 11, 2001. *Grant, 02/27/2002, Exemption No. 7733.*

Docket No.: FAA–2002–11608.
Petitioner: Palmyra Flying Club, Inc.
Section of 14 CFR Affected: 14 CFR §§ 135.251, 135.251, 135.255, and 135.353, and appendixes I and J to part 121.
Description of Relief Sought/ Disposition: To permit Palmyra to conduct local sightseeing flights at Palmyra Airport for the fly-in breakfast on June 16, 2002, for compensation or hire, without complying with certain anti-drug and alcohol misuse prevention requirements of part 135. *Grant, 02/28/ 2002, Exemption No. 7730.*

Docket No.: FAA–2002–11504.
Petitioner: DeKalb Peachtree Airport.
Section of 14 CFR Affected: 14 CFR §§ 135.251, 135.255, and 135.353, and appendixes I and J to part 121.
Description of Relief Sought/ Disposition: To permit DeKalb Peachtree Airport to conduct local sightseeing flights for its Good Neighbor Day Open House/Airshow on June 1, 2002, and June 7, 2003, for compensation or hire, without complying with certain anti-drug and alcohol misuse presentation requirements of part 135. *Grant, 02/28/ 2002, Exemption No. 7731.*

[FR Doc. 02–6649 Filed 3–19–02; 8:45 am]
BILLING CODE 4910–13–M

DEPARTMENT OF TRANSPORTATION

Federal Aviation Administration

[Summary Notice No. PE–2002–17]

Petitions for Exemption; Dispositions of Petitions Issued

AGENCY: Federal Aviation Administration (FAA), DOT.

ACTION: Notice of dispositions of prior petitions.

SUMMARY: Pursuant to FAA's rulemaking provisions governing the application, processing, and disposition of petitions for exemption part 11 of Title 14, Code of Federal Regulations (14 CFR), this notice contains the dispositions of certain petitions previously received. The purpose of this notice is to improve the public's awareness of, and participation in, this aspect of FAA's regulatory activities. Neither publication of this notice nor the inclusion or omission of information in the summary is intended to affect the legal status of any petition or its final disposition.

FOR FURTHER INFORMATION CONTACT: Denise Emrick (202) 267–5174, Office of Rulemaking (ARM–1), Federal Aviation Administration, 800 Independence Avenue, SW., Washington, DC 20591.

This notice is published pursuant to 14 CFR 11.85 and 11.91.

Issued in Washington, DC on March 14, 2002.

Donald P. Byrne,
Assistant Chief Counsel for Regulations.

Dispositions of Petitions

Docket No.: FAA–2002–11458.
Petitioner: Northern Air Fuel, Inc.
Section of 14 CFR Affected: 14 CFR 91.9(a).
Description of Relief Sought/ Disposition: To permit Northern Air Fuel to operate its DC–6A and DC–6B aircraft at a 5 percent increased zero fuel and landing weight for the purpose of operating all-cargo aircraft to provide supplies to people in isolated villages in Alaska.
Grant, 02/06/2002, Exemption No. 7709

Docket No.: FAA–2001–8828.
Petitioner: Ayres Corporation.
Section of 14 CFR Affected: 14 CFR 61.31(a)(1).
Description of Relief Sought/ Disposition: To permit Ayres pilots when operating an Ayres Model S2R–T660 aircraft (S2R–T660) to act as pilot

in command (PIC) without holding a type rating for that aircraft.

Grant, 01/25/2002, Exemption No. 7708.

Docket No.: FAA–2002–11559.

Petitioner: Brim Equipment Leasing, Inc. dba Brim Aviation.

Section of 14 CFR Affected: 14 CFR 135.143(c)(2).

Description of Relief Sought/ Disposition: To permit Brim Aviation to operate certain aircraft under part 135 without a TSO–C112 (Mode S) transponder installed on those aircraft.

Grant, 02/19/2002, Exemption No. 7176A (Previously Docket No. 29902)

Docket No.: FAA–2002–11557.

Petitioner: Bemidji Aviation Services, Inc.

Section of 14 CFR Affected: 14 CFR 135.143(c)(2).

Description of Relief Sought/ Disposition: To permit Bemidji to operate certain aircraft under part 135 without a TSO–C112 (Mode S) transponder installed on those aircraft.

Grant, 02/25/2002, Exemption No. 6110C (Previously Docket No. 28173)

Docket No.: FAA–2002–11554.

Petitioner: Adeletom Aviation. LLC.

Section of 14 CFR Affected: 14 CFR 135.143(c)(2).

Description of Relief Sought/ Disposition: To permit Adeletom to operate certain aircraft under part 135 without a TSO–C112 (Mode S) transponder installed on those aircraft.

Grant, 02/25/2002, Exemption No. 7201A (Previously Docket No. 29911).

Docket No.: FAA–2002–11508.

Petitioner: Premier Jets, Inc.

Section of 14 CFR Affected: 14 CFR 135.143(c)(2).

Description of Relief Sought/ Disposition: To permit Premier Jets to operate certain aircraft under part 135 without a TSO–C112 (Mode S) transponder installed on those aircraft.

Grant, 02/14/2002, Exemption No. 7160A (Previously Docket No. 29195).

Docket No.: FAA–2002–11655.

Petitioner: IHC Health Services, Inc. dba IHC Life Flight.

Section of 14 CFR Affected: 14 CFR 133.45(e)(1).

Description of Relief Sought/ Disposition: To permit IHC to conduct Class D rotorcraft-load combination rescue operations with an Agusta A 109K–2 helicopter certificated in the normal category under 14 CFR part 27.

Grant, 02/25/2002, Exemption No. 7118A (Previously Docket No. 29732).

Docket No.: FAA–2002–11485.

Petitioner: Southwest Airlines Company.

Section of 14 CFR Affected: 14 CFR 121.434(c)(1)(ii).

Description of Relief Sought/ Disposition: To permit Southwest to substitute a qualified and authorized check airman in place of an FAA inspector to observe a qualifying pilot in command (PIC) while that PIC is performing prescribed duties during at least one flight leg that includes a takeoff and landing when completing initial or upgrade training as specified in § 121.424.

Grant, 02/25/2002, Exemption No. 7132A (Previously Docket No. 29836).

Docket No.: FAA–2002–11352.

Petitioner: Continental Micronesia Airlines, Inc.

Section of 14 CFR Affected: 14 CFR 121.291(b)(1) and 121.291(d).

Description of Relief Sought/ Disposition: To permit Continental Micronesia Airlines to operate Boeing 737–800 airplanes without conducting a partial demonstration of emergency evacuation procedures upon the initial introduction of a type and model of airplane into passenger/carrying operations, and without showing by simulated ditching that it has the ability to efficiently carry out its ditching procedures.

Denial, 02/22/2002, Exemption No. 7718.

Docket No.: FAA–2002–11556.

Petitioner: Grant Aviation, Inc.

Section of 14 CFR Affected: 14 CFR 135.143(c)(2).

Description of Relief Sought/ Disposition: To permit Grant to operate certain aircraft under part 135 without a TSO–C112 (Mode S) transponder installed on those aircraft.

Grant, 02/19/2002, Exemption No. 7221A (Previously Docket No. 3008)

Docket No.: FAA–2002–11491.

Petitioner: Grant Aircraft Company.

Section of 14 CFR Affected: 14 CFR 91.9(a) and 91.531(a) (1) and (2).

Description of Relief Sought/ Disposition: To permit Cessna to allow certain qualified pilots of Cessna Citation Model 550, S550, 552, or 560 aircraft to operate those aircraft without a pilot who is designated as second in command.

Grant, 02/25/2002, Exemption No. 4050L (Previously Docket No. 23771)

Docket No.: FAA–2001–10555.

Petitioner: DHL Airways, Inc.

Section of 14 CFR Affected: 14 CFR 121.433(c)(1)(iii) and 121.441 (a)(1) and (b)(1), and, appendix F to part 121.

Description of Relief Sought/ Disposition: To permit DHL to combine recurrent flight and ground training and proficiency checks to DHL's flight crewmembers into a single annual training and proficiency evaluation program.

Grant, 02/20/2002, Exemption No. 6727B (Previously Docket No. 28808)

Docket No.: FAA–2002–11458.

Petitioner: Northern Air Fuel, Inc.

Section of 14 CFR Affected: 14 CFR 91.9(a).

Description of Relief Sought/ Disposition: To permit Northern Air Fuel to operate its DC–6A and DC–6B aircraft at a 5 percent increased zero fuel and landing weight for the purpose of operating all-cargo aircraft to provide supplies to people in isolated villages in Alaska.

Grant, 02/25/2002, Exemption No. 7709A

Docket No.: FAA–2002–11563.

Petitioner: Better Living Aviation.

Section of 14 CFR Affected: 14 CFR 135.143(c)(2).

Description of Relief Sought/ Disposition: To permit Better Living Aviation to operate certain aircraft under part 135 without a TSO–C112 (Mode S) transponder installed on those aircraft.

Grant, 02/19/2002, Exemption No. 7206A (Previously Docket No. 29956)

[FR Doc. 02–6650 Filed 3–19–02; 8:45 am]

BILLING CODE 4910–13–M

DEPARTMENT OF TRANSPORTATION

Federal Aviation Administration

Government/Industry Aeronautical Charting Forum Meeting

AGENCY: Federal Aviation Administration (FAA), DOT.

ACTION: Notice of public meeting.

SUMMARY: This notice announces a public meeting of the Federal Aviation Administration's Government/Industry Aeronautical Charting Forum to discuss informational content and design of aeronautical charts.

DATES: The meeting will be held from April 29, 2002 to May 2, 2002 from 9 a.m. to 4:30 p.m.

ADDRESSES: The meeting will be held at the National Aeronautical Charting Office, Silver Spring Metro Center, Building 4, 1305 East-West Highway, Silver Spring, Maryland 20910.

FOR FURTHER INFORMATION CONTACT: Richard V. Powell, FAA, Air Traffic Airspace Management, ATA–100, 800 Independence Avenue, SW., Washington, DC 20591; telephone: (202) 267–8790, fax: (202) 493–4266.

SUPPLEMENTARY INFORMATION: Pursuant to § 10(a)(2) of the Federal Advisory Committee Act (Pub. L. 92–463; 5 U.S.C. App. II), notice is hereby given of a meeting of the Government/Industry

Aeronautical Charting Forum to be held from April 29, 2002 to May 2, 2002, from 9 a.m. to 4:30 p.m. at the National Aeronautical Charting Office, Silver Spring Metro Center, Building 4, 1305 East-West Highway, Silver Spring, Maryland 20910. The agenda will include:

1. Opening Remarks.
2. Committee Administration.
3. Old Business—Review minutes of last forum 01–02.
4. Aeronautical Charting Forum working groups reports, project reports.
5. Status of outstanding charting topics.
6. New charting topics.
7. Presentations.
8. Closing remarks.
9. Discussion of future meeting dates, locations, activities and plans.
10. Adjourn

Attendance is open to the interested public, but will be limited to the space available.

The public must make arrangements by April 3, 2002, to present oral statements at the meeting. The public may present written statements to the committee at any time by providing a copy to the person listed in the **FOR FURTHER INFORMATION CONTACT** section. Public statements will only be considered if time permits.

Issued in Washington, DC, on March 14, 2002.

Richard V. Powell,

Chair, Government/Industry, Aeronautical Charting Forum.

[FR Doc. 02–6652 Filed 3–19–02; 8:45 am]

BILLING CODE 4910–13–M

DEPARTMENT OF TRANSPORTATION

Federal Aviation Administration

Notice of Intent To Rule on Application 02–09–U–00–CLE To Use the Revenue From a Passenger Facility Charge (PFC) at Cleveland Hopkins International Airport (CLE) and Burke Lakefront Airport (BKL), Cleveland, OH

AGENCY: Federal Aviation Administration (FAA), DOT.

ACTION: Notice of intent to rule on application.

SUMMARY: The FAA proposes to rule and invites public comment on the application to use the revenue from a PFC at Cleveland Hopkins International Airport and Burke Lakefront Airport under the provisions of the 49 U.S.C. 40117 and part 158 of the Federal Aviation Regulations (14 CFR part 158).

DATES: Comments must be received on or before April 19, 2002.

ADDRESSES: Comments on this application may be mailed or delivered in triplicate to the FAA at the following address: Federal Aviation Administration, Detroit Airports District Office, Willow Run Airport, East, 8820 Beck Road, Belleville, Michigan 48111.

In addition, one copy of any comments submitted to the FAA must be mailed or delivered to Michael Konicek, Cleveland Hopkins International Airport at the following address: Cleveland Hopkins International Airport, 5300 Riverside Drive, Cleveland, Ohio 44135.

Air carriers and foreign air carriers may submit copies of written comments previously provided to the Cleveland Hopkins International Airport under section 158.23 of part 158.

FOR FURTHER INFORMATION CONTACT: Ms. Arlene B. Draper, Program Manager, Federal Aviation Administration, Detroit Airports District Office, Willow Run Airport, East, 8820 Beck Road, Belleville, Michigan 48111 (734–487–7283). The application may be reviewed in person at this same location.

SUPPLEMENTARY INFORMATION: The FAA proposes to rule and invites public comment on the application to use the revenue from a PFC at Cleveland Hopkins International Airport and Burke Lakefront Airport under the provisions of the 49 U.S.C. 40117 and part 158 of the Federal Aviation Regulations (14 CFR part 158).

On February 5, 2002, the FAA determined that the application to use the revenue from a PFC submitted by Cleveland Hopkins International Airport was substantially complete within the requirements of section 158.25 of part 158. The FAA will approve or disapprove the application, in whole or in part, not later than May 31, 2002.

The following is a brief overview of the application.

Actual charge effective date: June 1, 1999.

Estimated charge expiration date: November 1, 2002.

Level of the proposed PFC: $4.50.

Total estimated PFC revenue: $3,410,400.

Brief description of proposed projects: Analex Office Building Demolition (CLE); Installation of Instrument Landing System (ILS) on Runway 6L/24R (BKL).

Class or classes of air carriers which the public agency has requested to be required to collect PFCs: air taxi.

Any person may inspect the application in person at the FAA office listed above under **FOR FURTHER INFORMATION CONTACT.**

In addition, any person may, upon request, inspect the application, notice and other documents germane to the application in person at the Cleveland Hopkins International Airport, 5300 Riverside Drive, Cleveland, Ohio 44135.

Issued in Des Plaines, Illinois on March 12, 2002.

Mark A. McClardy,

Manager, Planning and Programming Branch, Airports Division, Great Lakes Region.

[FR Doc. 02–6651 Filed 3–19–02; 8:45 am]

BILLING CODE 4910–13–M

DEPARTMENT OF TRANSPORTATION

Federal Aviation Administration

Notice of Intent To Rule on Application To Impose and Use the Revenue From a Passenger Facility Charge (PFC) at Lubbock International Airport, Lubbock, TX

AGENCY: Federal Aviation Administration (FAA), DOT.

ACTION: Notice of Intent to Rule on Application.

SUMMARY: The FAA proposes to rule and invites public comment on the application to impose and use the revenue from a PFC at Lubbock International Airport under the provisions of the Aviation Safety and Capacity Expansion Act of 1990 (Title IX of the Omnibus Budget Reconciliation Act of 1990) (Public Law 101–508) and Part 158 of the Federal Aviation Regulations (14 CFR Part 158).

DATES: Comments must be received on or before April 19, 2002.

ADDRESSES: Comments on this application may be mailed or delivered in triplicate copies to the FAA at the following address: Mr. G. Thomas Wade, Federal Aviation Administration, Southwest Region, Airports Division, Planning and Programming Branch, ASW–611, Fort Worth, Texas 76193–0610.

In addition, one copy of any comments submitted to the FAA must be mailed or delivered to Mr. Mark N. Earle Manager of Lubbock International Airport at the following address: Director of Aviation, Route 3, Box 389, Lubbock, Texas 79403.

Air carriers and foreign air carriers may submit copies of the written comments previously provided to the Airport under Section 158.23 of Part 158.

FOR FURTHER INFORMATION CONTACT: Mr. G. Thomas Wade, Federal Aviation Administration, Southwest Region, Airports Division, Planning and Programming Branch, ASW–611, Fort Worth, Texas 76193–0610, (817) 222–5613.

The application may be reviewed in person at this same location.

SUPPLEMENTARY INFORMATION: The FAA proposes to rule and invites public comment on the application to impose and use the revenue from a PFC at Lubbock International Airport under the provisions of the Aviation Safety and Capacity Expansion Act of 1990 (Title IX of the Omnibus Budget Reconciliation Act of 1990) (Public Law 101–508) and Part 158 of the Federal Aviation Regulations (14 CFR Part 158).

On March 11, 2002, the FAA determined that the application to impose and use the revenue from a PFC submitted by the Airport was substantially complete within the requirements of Section 158.25 of Part 158. The FAA will approve or disapprove the application, in whole or in part, no later than June 19, 2002.

The following in a brief overview of the application.

Level of the proposed PFC: $3.00.

Proposed charge effective date: September 1, 2002.

Proposed charge expiration date: November 1, 2004.

Total estimated PFC revenue: $3,220,308.

PFC application number: 02–04–C–00–LBB.

Brief Description of Proposed Project(s)

Projects To Impose and Use PFC's

1. Construct ARFF Training Facility
2. Upgrade Airside Guidance Signs
3. Acquire 150-Gallon ARFF Vehicle
4. Update Airport Master Plan
5. Improve General Aviation Apron
6. Install Blast Wall

Project To Impose PFC's

1. Acquire Development Land

Projects To Use PFC's

1. Improve Westport Apron
2. Construct Taxiway B–1
3. Acquire ADA Aircraft Access Equipment

Proposed Class or Classes of Air Carriers To Be Exempted From Collecting PFC's

1. FAR Part 135 on demand air Taxi/Commercial Operator (ATCO) reporting on FAA Form 1800–31.
2. Air Carriers Filing RSPA form 298C, Schedule E1 or Schedule T1.

Any person may inspect the application in person at the FAA office listed above under **FOR FURTHER INFORMATION CONTACT** and at the FAA regional Airports office located at: Federal Aviation Administration, Southwest Region, Airports Division, Planning and Programing Branch, ASW–610, 2601 Meacham Blvd., Fort Worth, Texas 76137–4298.

In addition, any person may, upon request, inspect the application, notice and other documents germane to the application in person at Lubbock International Airport.

Issued in Fort Worth, Texas on March 11, 2002.

William J. Flanagan,

Acting Manager, Airports Division.

[FR Doc. 02–6648 Filed 3–19–02; 8:45 am]

BILLING CODE 4910–13–M

DEPARTMENT OF TRANSPORTATION

Federal Aviation Administration

Notice of Intent To Rule on Application To Impose and Use the Revenue From a Passenger Facility Charge (PFC) at Louis Armstrong New Orleans International Airport, New Orleans, LA

AGENCY: Federal Aviation Administration (FAA), DOT.

ACTION: Notice of intent to rule on application.

SUMMARY: The FAA proposes to rule and invites public comment on the application to impose and use the revenue from a PFC at Louis Armstrong New Orleans International Airport under the provisions of the Aviation Safety and Capacity Expansion Act of 1990 (Title IX of the Omnibus Budget Reconciliation Act of 1990) (Public Law 101–508) and Part 158 of the Federal Aviation Regulations (14 CFR Part 158).

DATES: Comments must be received on or before April 19, 2002.

ADDRESSES: Comments on this application may be mailed or delivered in triplicate copies to the FAA at the following address: Mr. G. Thomas Wade, Federal Aviation Administration, Southwest Region, Airports Division, Planning and Programming Branch, ASW–611, Fort Worth, Texas 76193–0610.

In addition, one copy of any comments submitted to the FAA must be mailed or delivered to Mr. Roy A. Williams Manager of Louis Armstrong New Orleans International Airport at the following address: Director of Aviation, P.O. Box 20007, New Orleans, LA 70141.

Air carriers and foreign air carriers may submit copies of the written comments previously provided to the Airport under Section 158.23 of Part 158.

FOR FURTHER INFORMATION CONTACT: Mr. G. Thomas Wade, Federal Aviation Administration, Southwest Region, Airports Division, Planning and Programming Branch, ASW–611, Fort Worth, Texas 76193–0610, (817) 222–5613.

The application may be reviewed in person at this same location.

SUPPLEMENTARY INFORMATION: The FAA proposes to rule and invites public comment on the application to impose and use the revenue from a PFC at Louis Armstrong New Orleans International Airport under the provisions of the Aviation Safety and Capacity Expansion Act of 1990 (Title IX of the Omnibus Budget Reconciliation Act of 1990) (Public Law 101–508) and Part 158 of the Federal Aviation Regulations (14 CFR part 158).

On March 13, 2002, the FAA determined that the application to impose and use the revenue from a PFC submitted by the Airport was substantially complete within the requirements of Section 158.25 of part 158. The FAA will approve or disapprove the application, in whole or in part, no later than June 17, 2002.

The following is a brief overview of the application.

Level of the proposed PFC: $4.50.

Proposed charge effective date: April 1, 2005.

Proposed charge expiration date: January 1, 2011.

Total estimated PFC revenue: $148,375,724.

PFC application number: 02–06–C–00–MSY.

Brief Description of Proposed Project(s)

Project to Impose and Use PFC's

1. *Acquire Aircraft Loading Bridges*
2. Upgrade Airfield Electrical System
3. Airfield Safety Improvements
4. Improve Apron Drainage
5. Conduct Benefit Cost Analysis
6. Reconstruct Concourse C
7. Conduct EIS for New Air Carrier Runway
8. Expand Terminal D
9. Upgrade Access Control and Security System
10. Replace ARFF Facility
11. Rehabilitate Runway 1/19 and Taxiway S
12. Rehabilitate Runway 10/18
13. Relocate Rotating Beacon
14. Acquire Land For Development—Lafon
15. Rehabilitate Terminal Apron
16. Rehabilitate Terminal HVAC
17. Acquire Land For Development—West Cargo Area

Proposed class or classes of air carriers to be exempted from collecting PFC's:

1. FAR Part 135 on demand air Taxi/Commercial Operator (ATCO) reporting on FAA Form 1800–31.

Any person may inspect the application in person at the FAA office listed above under **FOR FURTHER INFORMATION CONTACT** and at the FAA regional Airports office located at: Federal Aviation Administration, Southwest Region, Airports Division, Planning and Programming Branch, ASW–610, 2601 Meacham Blvd., Fort Worth, Texas 76137–4298.

In addition, any person may, upon request, inspect the application, notice and other documents germane to the application in person at Louis Armstrong New Orleans International Airport.

Issued in Fort Worth, Texas on March 13, 2002.

Naomi L. Saunders,

Manager, Airports Division.

[FR Doc. 02–6759 Filed 3–19–02; 8:45 am]

BILLING CODE 4910–13–M

DEPARTMENT OF TRANSPORTATION

Federal Highway Administration

Environmental Impact Statement: Waukesha County, WI

AGENCY: Federal Highway Administration (FHWA), DOT.

ACTION: Supplemental notice of intent.

SUMMARY: The FHWA is issuing this notice to advise the public that an environmental impact statement will be prepared for transportation improvements in the State Trunk Highway (STH) 83 corridor between County Trunk Highway (CTH) ''NN'' at the north limits of the Village of Mukwonago and STH 16, Waukesha County, Wisconsin. The north terminus was extended since the notice of intent was published in the **Federal Register** on March 26, 2001 (66 FR 16520).

FOR FURTHER INFORMATION CONTACT: Mr. Richard C. Madrzak, Field Operations Engineer, Federal Highway Administration, 567 D'Onofrio Drive, Madison, Wisconsin 53719–2814; telephone: (608) 829–7510. You may also contact Ms. Carol Cutshall, Director, Bureau of Environment, Wisconsin Department of Transportation, P.O. Box 7965, Madison, Wisconsin 53707–7965; telephone: (608) 266–9626.

SUPPLEMENTARY INFORMATION:

Electronic Access

An electronic copy of this document may be downloaded by using a computer, modem and suitable communications software from the Government Printing Offices' Electronic Bulletin Board Service at (202) 512–1661. Internet users may reach the Office of Federal Register's home page at: *http://www.nara.gov/fedreg* and the Government Printing Offices' database at: *http://www.access.gpo.gov/nara.*

Background

The FHWA, in cooperation with the Wisconsin Department of Transportation, will prepare a Draft Environmental Impact Statement (EIS) on a proposal to provide safety, operational and capacity improvements on an approximate 27 kilometer (17 mile) section of STH 83 between CTH ''NN'' at the north limits of the Village of Mukwonago and STH 16, Waukesha County.

This notice is supplementary to the notice of intent, which was published in the **Federal Register** on March 26, 2001 at 66 FR 16520. The purpose of the supplemental notice of intent is to extend the project limits about 6 kilometers (4 miles) at the north terminus. The previous north terminus was Interstate Highway 94. The revised north terminus is STH 16.

To ensure that the full range of issues related to this proposed action are addressed, and all substantive issues are identified, comments and suggestions are invited from all interested parties. Comments or questions concerning this proposed action and the EIS should be directed to FHWA or the Wisconsin Department of Transportation at the addresses provided in the caption **FOR FURTHER INFORMATION CONTACT.**

(Catalog of Federal Domestic Assistance Program Number 20.205, Highway Planning and Construction. The regulations implementing Executive Order 12372 regarding intergovernmental consultation on Federal programs and activities apply to this program).

Authority: 23 U.S.C. 315; 49 CFR 1.48.

Issued on: March 12, 2002.

Philip E. Barnes,

Acting Division Administrator, Federal Highway Administration, Madison, Wisconsin.

[FR Doc. 02–6631 Filed 3–19–02; 8:45 am]

BILLING CODE 4910–22–M

DEPARTMENT OF TRANSPORTATION

Federal Highway Administration.

Environmental Impact Statement: Weber County, UT

AGENCY: Federal Highway Administration (FHWA), DOT.

ACTION: Notice of intent.

SUMMARY: The FHWA is issuing this notice of intent to advise the public that an environmental impact statement will be prepared for a proposed highway project in Weber County, Utah.

FOR FURTHER INFORMATION CONTACT: Ms. Sandra Garcia, Federal Highway Administration, 2520 W. 4700 S. Suite 9A, Salt Lake City, Utah 84118–1847, Telephone: (801) 963–0182; E-mail: *sandra.garcia@fhwa.dot.gov.*

SUPPLEMENTARY INFORMATION: The FHWA, in cooperation with the Utah Department of Transportation (UDOT), will prepare an environmental impact statement (EIS) on a proposal to improve Riverdale Road, Utah State Route 26 (SR–26) from I–15 to Washington Boulevard, in Ogden, Utah. The proposed improvement will involve the reconstruction of the existing SR–26 through the cities of Roy, Riverdale, South Ogden and Ogden for a distance of about 5.3 kilometers (3.3 miles).

Improvements to the corridor are considered necessary to provide for the existing and projected traffic demands. Also, included in this proposal is the replacement of the existing Riverdale Road Interchange bridges over I–84 and I–15. Alternatives under consideration include (1) taking no action, (2) using alternate travel modes, (3) traffic signal and lane striping modifications, and (4) widening the existing 4 lane roadway to 6 lanes.

Letters describing the proposed action and soliciting comments will be sent to appropriate Federal, State, and local agencies, and to private organizations and citizens who have previously expressed or are known to have interest in this proposal. A series of public meetings will be held in the proximity of the project starting April 2002. In addition, a public hearing will be held. Public notice will be given of the time and place of the meeting and hearing. The draft EIS will be available for public and agency review and comment prior to the public hearing.

To ensure that the full range of issues related to this proposed action are addressed and all significant issues identified, comments and suggestions are invited from all interested parties. Comments or questions concerning this proposed action and the EIS should be directed to the FHWA at the address provided above.

(Catalog of Federal Domestic Assistance Program Number 20.205, Highway Planning and Construction. The regulations implementing Executive Order 12372 regarding intergovernmental consultation on Federal programs and activities apply to this program.)

Issued on: March 14, 2002.

William R. Gedris,

Structural/Environmental Engineer, Salt Lake City, Utah.

[FR Doc. 02–6685 Filed 3–15–02; 8:45 am]

BILLING CODE 4910–22–M

DEPARTMENT OF TRANSPORTATION

Federal Railroad Administration

Programmatic Environmental Impact Statement for Passenger Rail Improvements to the Los Angeles to San Diego Rail Corridor

AGENCY: Federal Railroad Administration, (FRA), Department of Transportation (DOT).

ACTION: Notice of intent to prepare an environmental impact statement.

SUMMARY: FRA is issuing this notice to advise the public that FRA will join the California Department of Transportation (Department) in the preparation of a program level environmental impact statement (EIS) and program environmental impact report (EIR) for passenger rail improvements to the Los Angeles to San Diego (LOSSAN) rail corridor. FRA is also issuing this notice to solicit public and agency input into the development of the scope of the EIR/EIS and to advise the public that outreach activities conducted by the Department and its representatives will be considered in the preparation of the EIR/EIS. Alternatives to be evaluated and analyzed in the Program EIR/EIS include (1) take no action (No-Project or No-Build); (2) construction of passenger rail improvements in the LOSSAN rail corridor; and (3) modal alternatives that would include a combination of air and highway improvements. Possible environmental impacts include displacement of commercial and residential properties; disproportionate impacts to minority and low-income populations; community and neighborhood disruption; increased noise along the rail corridor or at airports and along highways; traffic impacts associated with stations or airports; effects to historic properties or archaeological sites; impacts to parks and recreation resources; visual quality effects; exposure to seismic and flood hazards; impacts to water resources, wetlands, and sensitive biological species and habitat; land use compatibility impacts; energy use; and impacts to agricultural lands.

FOR FURTHER INFORMATION CONTACT: For further information regarding the programmatic environmental review, please contact: Mr. Patrick Merrill, Manager, California Department of Transportation, Division of Rail, MS 74, PO Box 942874, Sacramento, CA 94274–0001, (telephone 916–654–7543) or Mr. David Valenstein, Environmental Program Manager, Office of Passenger Programs, Federal Railroad Administration, 1120 Vermont Avenue (Mail Stop 20), Washington, DC 20590, (telephone 202–493–6368).

SUPPLEMENTARY INFORMATION: The Department has determined that improvements to the existing LOSSAN rail corridor may be necessary to meet the expected growth in population and resulting increases in intercity travel demand between Los Angeles and San Diego. As a result of this growth in travel demand, there will be increases in travel delays from the growing congestion on California's highways and at airports. In terms of passenger volumes, the LOSSAN corridor is the second-busiest intercity rail corridor in the nation, after the Northeast Corridor connecting Washington DC, New York and Boston. Amtrak uses the LOSSAN rail corridor for the Pacific Surfliner Service between Los Angeles and San Diego that is supported by the Department. The Southern California Regional Rail Authority also uses the LOSSAN rail Corridor for their Metrolink commuter rail service between Los Angeles and Oceanside and the North County Transit District uses it for their Coaster commuter rail service between Oceanside and San Diego. Finally, the Burlington Northern Santa Fe also uses the LOSSAN rail corridor for freight service.

The California High Speed Rail Authority (Authority) has designated the LOSSAN rail corridor as a potential component of the proposed statewide high speed rail system that the Authority is studying. FRA and the Authority are preparing a separate program EIR/EIS for the proposed statewide train system. The Authority will be considering shared use of the LOSSAN rail corridor and tracks in the program EIR/EIS for the statewide system. The Department has decided to coordinate the public review of proposed improvements to the LOSSAN rail corridor with the Authority's environmental review of the statewide system. The Authority and the Department will share the results of technical studies related to the LOSSAN rail corridor.

Alternatives

An initial system alternatives evaluation will consider all reasonable system alternatives at a broad level of analysis. This analysis will be followed by a more detailed consideration of the most practical and feasible alternatives in the Program EIR/EIS. The alternatives will include:

No-Build Alternative

The take no action (No-Project or No-Build) alternative is defined to serve as the baseline for comparison of all alternatives. The No-Build Alternative represents the state's transportation system (highway, air, and rail) as it exists, and as it would exist after completion of programs or projects currently being implemented. The No-Build Alternative would draw upon the following sources of information:

- State Transportation Improvement Program (STIP)
- Regional Transportation Plans (RTPs) for all modes of travel
- Airport plans
- Passenger rail plans

Passenger Rail Alternative

The LOSSAN Rail Corridor improvements are incremental rail upgrades to the LOSSAN corridor. The upgrade of the LOSSAN rail corridor was previously studied in the Amtrak 20-Year Passenger Transportation Plan issued in March of 2001, which identified major improvements that could be undertaken between San Juan Capistrano and the Santa Fe Depot in downtown San Diego. The improvements to be discussed in the program EIR/EIS include:

- Completion or substantial completion of a second main track in the LOSSAN corridor;
- The consideration of alternative profiles (e.g. trenches, tunnels, viaducts) and/or deviations from the existing LOSSAN corridor in:
- San Juan Capistrano
- San Clemente
- Encinitas
- Del Mar
- Miramar Hill;
- Curve realignment at the Fullerton Junction, the Orange Junction and Dana Point;
- The increase to four main tracks in the corridor between Commerce and Fullerton; and
- Possible alternative profiles (e.g. trenches, tunnels, viaducts), deviations from the existing LOSSAN corridor and/or additional grade-separations as potential mitigation treatments in Orange-Santa Ana, Oceanside and Carlsbad.

FRA and the Department will consider all stations for the existing State-supported Amtrak Surfliner service in the development of LOSSAN rail corridor improvements. These are:

LA Union Station, Fullerton, Anaheim, Santa Ana Transportation Center, Irvine Transportation Center, San Juan Capistrano, Oceanside Transportation Center, Solana Beach, and San Diego Santa Fe Depot. Additional stations and improvements to existing stations will be determined based on ridership potential, system-wide needs, and local planning constraints/conditions. Station needs will be coordinated with local and regional planning agencies, and seamless connectivity with other modes of travel will be emphasized. Potential new station locations will be evaluated in the Program EIR/EIS including: San Diego Airport, and University Town Center (La Jolla).

Other Modal Alternatives

There are currently three main options for intercity travel between the major urban areas of San Diego and Los Angeles: vehicles on the highway system, commercial air service, and conventional passenger trains (Amtrak). The FRA and the Department will evaluate a set of Modal/System Alternatives consisting of expansion of highways and airports at a similar level of investment serving the markets identified for the Passenger Rail Alternative, with no substantial change to intercity and commuter rail systems. The modal alternatives will be defined by assigning the expected incremental travel demand forecasted for the 20-year horizon to the state's transportation infrastructure, then identifying alternatives for accommodating that travel demand without passenger rail improvements.

Scoping and Comments

FRA encourages broad participation in the EIR/EIS process during scoping and subsequent review of the resulting environmental documents. Comments and suggestions are invited from all interested agencies and the public at large to insure the full range of issues related to the proposed action and all reasonable alternatives are addressed and all significant issues are identified. In particular, FRA is interested in determining whether there are areas of environmental concern where there might be the potential for significant impacts identifiable at a program level. Public agencies with jurisdiction are requested to advise the FRA and the Department of the applicable permit and environmental review requirements of each agency, and the scope and content of the environmental information that is germane to the agency's statutory responsibilities in connection with the proposed improvements.

Scoping meetings will be advertised locally and are planned for the following major cities along the LOSSAN rail corridor at the dates and times indicated:

- *Los Angeles:* April 2, 1:30 to 3:30 pm, MTA Bldg, Union Station Room, One Gateway Plaza
- *San Clemente:* April 2, 6:00 to 8:00 pm, San Clemente Inn, 2600 Avenida de Presidente
- *Anaheim:* April 3, 10:00 am to 12:00 pm, City Hall West, Gordon Hoyt Conference Center, 201 S. Anaheim Blvd.
- *Carlsbad:* April 3, 6:00 to 8:00 pm, Carlsbad Senior Center, 799 Pine Street

Persons interested in providing comments on the scope of the program EIR/EIS should do so by April 17, 2002. Comments can be sent in writing to Mr. David Valenstein at the FRA address identified above. Comments may also be addressed to Mr. Patrick Merrill of the Department at their address identified above. Information regarding the environmental review process will also be made available through the Department's rail services Internet site: *http://www.amtrakcalifornia.com/*. Information and documents regarding technical studies will be made available though the Authority's Internet site: *http://www.cahighspeedrail.ca.gov/*.

Issued in Washington DC, on March 14, 2002.

Mark E. Yachmetz,

Associate Administrator for Railroad Development.

[FR Doc. 02–6644 Filed 3–19–02; 8:45 am]

BILLING CODE 4910–06–P

DEPARTMENT OF TRANSPORTATION

Research and Special Programs Administration Office of Hazardous Materials Safety; Notice of Delays in Processing of Exemption Applications

AGENCY: Research and Special Programs Administration, DOT.

ACTION: List of applications delayed more than 180 days.

SUMMARY: In accordance with the requirements of 49 U.S.C. 5117(c), RSPA is publishing the following list of exemption applications that have been in process for 180 days or more. The reason(s) for delay and the expected completion date for action on each application is provided in association with each identified application.

FOR FURTHER INFORMATION CONTACT: J. Suzanne Hedgepath, Director, Office of Hazardous Materials, Exemptions and Approvals, Research and Special Programs Administration, U.S. Department of Transportation, 400 Seventh Street, SW, Washington, DC 20590–0001, (202) 366–4535.

Key to "Reasons for Delay"

1. Awaiting additional information from applicant.
2. Extensive public comment under review.
3. Application is technically complex and is of significant impact or precedent-setting and requires extensive analysis.
4. Staff review delayed by other priority issues or volume of exemption applications.

Meaning of Application Number Suffixes

N—New application.

M—Modification request.

PM—Party to application with modification request.

Issued in Washington, DC, on March 13, 2002.

J. Suzanne Hedgepeth,

Director, Office of Hazardous Materials, Exemptions and Approvals.

NEW EXEMPTION APPLICATIONS

Application No.	Applicant	Reason for delay	Estimated date of completion
11862–N	The BOC Group, Murray Hill, NJ	4	05/31/2002
11927–N	Alaska Marine Lines, Inc., Seattle, WA	4	05/31/2002
12353–N	Monson Companies, South Portland, ME	4	05/31/2002
12381–N	Ideal Chemical & Supply Co., Memphis, TN	4	04/30/2002
12406–N	Occidental Chemical Corporation, Dallas, TX	4	03/29/2002
12412–N	Great Western Chemical Company, Portland, OR	4	03/29/2002
12434–N	Salmon Air, Salmon, ID	4	04/30/2002

NEW EXEMPTION APPLICATIONS—Continued

Application No.	Applicant	Reason for delay	Estimated date of completion
12440–N	Luxfer Inc., Riverside, CA	4	05/31/2002
12456–N	Baker Hughes, Houston, TX	4	05/31/2002
12571–N	Air Products & Chemicals, Inc., Allentown, PA	4	03/29/2002
12588–N	El Dorado Chemical Co., Creve Ceour, MO	4	05/31/2002
12630–N	Chemetall GmbH Gesellschaft, Langelsheim, DE	4	03/29/2002
12634–N	Norman International, Los Angeles, CA	4	05/31/2002
12648–N	Stress Engineering Services, Inc., Houston, TX	4	05/31/2002
12661–N	United Parcel Service (UPS), Atlanta, GA	4	05/31/2002
12690–N	Air Liquide America Corporation, Houston, TX	4	04/30/2002
12701–N	Fuel Cell Components & Intergrators, Inc., Hauppauge, NY	1	04/30/2002
12706–N	Raufoss Composites AS, Raufoss, NO	4	05/31/2002
12716–N	Air Liquide America Corporation, Houston, TX	4	04/30/2002
12718–N	Weldship Corporation, Bethlehem, PA	4	04/30/2002
12741–N	Thunderbird Cylinder Inc., Phoenix, AZ	4	03/29/2002
12751–N	Defense Technology Corporation, Casper, WY	4	03/29/2002
12753–N	Praxair, Inc., Danbury, CT	4	04/30/2002
12800–N	Department of Energy (DOE), Washington, DC	4	04/30/2002
12815–N	FMC Corporation, Opelousas, LA	4	04/30/2002
12820–N	Trinity Manufacturing Hamlet, NC	4	05/31/2002
12844–N	Delphi Automotive Systems, Troy, MI	4	03/29/2002

MODIFICATIONS TO EXEMPTIONS

Application No.	Applicant	Reason for delay	Estimated date of completion
4884–M	Matheson Tri-Gas, East Rutherford, NJ	4	03/29/2002
6805–M	Air Liquide America Corporation, Houston, TX	4	03/29/2002
7007–M	Allied Universal Corp, Miami, FL	4	03/29/2002
7060–M	Federal Express, Memphis, TN	4	04/30/2002
7277–M	Structural Composites Industries, Pomona, CA	4	04/30/2002
8162–M	Structural Composites Industries, Pomona, CA	4	05/31/2002
8308–M	Tradewind Enterprises, Inc., Hillsboro, OR	4	04/30/2002
8308–M	American Courier Express Corporation, Miramar, FL	4	04/30/2002
8554–M	Orica USA, Inc., Englewood, CO	4	04/30/2002
8718–M	Structural Composites Industries, Pomona, CA	4	04/30/2002
9401–M	Societe National de Wagon-Reservoirs, 79009 Paris, FR	4	03/29/2002
9884–M	Puritan Bennett Corp. (Div. of Tyco Healthcare), Indianapolis, IN	4	03/29/2002
10019–M	Structural Composites Industries, Pomona, CA	4	04/30/2002
10832–M	Autoliv ASP, Inc., Ogden, UT	4	04/30/2002
11327–M	Phoenix Services, Inc., Pasadena, MD	4	04/30/2002
11379–M	TRW Automotive Occupant Safety Systems, Washington, MI	4	04/30/2002
11537–M	JCI Jones Chemicals, Inc., Milford, VA	4	05/31/2002
11769–M	Great Western Chemical Company, Portland, OR	4	04/30/2002
11769–M	Great Western Chemical Company, Portland, OR	4	04/30/2002
11769–M	Hydrite Chemical Company, Brookfield, WI	4	05/31/2002
11791–M	The Coleman Company, Inc., Wichita, KS	4	04/30/2002
11850–M	Air Transport Association, Washington, DC	4	05/31/2002
11911–M	Transfer Flow, Inc., Chico, CA	4	05/31/2002
12065–M	Petrolab Company, Latham, NY	4	04/30/2002
12449–M	Chlorine Service Company, Inc., Kingwood, TX	4	03/29/2002
12599–M	Voltaix, Inc., North Branch, NJ	4	05/31/2002

[FR Doc. 02–6761 Filed 3–19–02; 8:45 am]

BILLING CODE 4910–60–M

DEPARTMENT OF TRANSPORTATION

Surface Transportation Board

[STB Finance Docket No. 34175]

Canadian National Railway Company and Wisconsin Central Ltd.—Trackage Rights Exemption—Wisconsin & Southern Railroad Company

Wisconsin & Southern Railroad Company (WSOR), pursuant to a written trackage rights amendment agreement entered into between WSOR and Canadian National Railway Company (CN) (for CN and on behalf of Wisconsin Central Transportation Corporation (WCTC) and WCTC's wholly owned subsidiary Wisconsin Central Ltd. (WCL)),[1] has agreed to grant

[1] CN has been authorized to control WCTC and WCTC's subsidiaries, which include WCL and Fox Valley & Western Ltd. (FVW). *See Canadian*

Continued

nonexclusive overhead trackage rights to WCL over WSOR's main line between milepost 115.9 at Slinger, WI, and milepost 93.2 [2] at North Milwaukee, WI, including trackage rights connecting with FVW's main line at DBR Junction milepost 103.1, and connecting with WCL's Plymouth Sub at North Milwaukee (joint trackage), a distance of approximately 22.7 miles.[3]

The transaction was scheduled to be consummated on or soon after March 7, 2002, the effective date of the exemption (7 days after the notice was filed).

The proposed amendment to the trackage rights would grant CN and WCL the right to use the joint trackage for the operation of its freight trains, locomotives, cabooses and rail cars (including business cars) and roadway equipment in its account over the subject line with WSOR and other carriers that may be permitted to use all or any part of the subject line for, among other things, the purpose of interchanging cars between WCL and Canadian Pacific and Union Pacific Railroad Company, and between WCL and FVW, as well as connecting various WCL and FVW lines and trackage rights.

As a condition to this exemption, any employees affected by the trackage rights will be protected by the conditions imposed in *Norfolk and Western Ry. Co.—Trackage Rights—BN,* 354 I.C.C. 605 (1978), as modified in *Mendocino Coast Ry., Inc.—Lease and Operate,* 360 I.C.C. 653 (1980).

This notice is filed under 49 CFR 1180.2(d)(7). If the notice contains false or misleading information, the exemption is void *ab initio.* Petitions to revoke the exemption under 49 U.S.C. 10502(d) may be filed at any time. The filing of a petition to revoke will not automatically stay the transaction.

An original and 10 copies of all pleadings, referring to STB Finance Docket No. 34175, must be filed with the Surface Transportation Board, Office of the Secretary, Case Control Unit, 1925 K Street, NW., Washington, DC 20423–0001. In addition, a copy of each pleading must be served on Michael J. Barron, Jr., 455 North Cityfront Plaza Drive, Chicago, IL 60211–5317.

Board decisions and notices are available on our website at *WWW.STB.DOT.GOV.''*

Decided: March 13, 2002.

By the Board, David M. Konschnik, Director, Office of Proceedings.

Vernon A. Williams,

Secretary.

[FR Doc. 02–6593 Filed 3–19–02; 8:45 am]

BILLING CODE 4915–00–P

National Railway Company, Grand Truck Corporation, and WC Merger Sub, Inc.—Control—Wisconsin Central Transportation Corporation, Wisconsin Central Ltd., Fox Valley & Western Ltd., Sault Ste. Marie Bridge Company, and Wisconsin Chicago Link Ltd., STB Finance Docket No. 34000 (STB served Sept. 7, 2001).

[2] This is the point where WSOR ownership ends and Canadian Pacific Railway Company (Canadian Pacific) ownership begins.

[3] The trackage rights amend and expand rights already in place between milepost 112.6 at Rugby Junction and milepost 93.4 at North Milwaukee. *See Wisconsin Central Ltd.—Trackage Rights Exemption—Wisconsin & Southern Railroad Company,* STB Finance Docket No. 33600 (STB served June 2, 1998).

DEPARTMENT OF THE TREASURY

Customs Service

List of Foreign Entities Violating Textile Transshipment and Country of Origin Rules

AGENCY: Customs Service, Department of the Treasury.

ACTION: General notice.

SUMMARY: This document notifies the public of foreign entities which have been issued a penalty claim under section 592 of the Tariff Act of 1930, for certain violations of the customs laws. This list is authorized to be published by section 333 of the Uruguay Round Agreements Act.

DATES: This document notifies the public of the semiannual list for the 6-month period starting March 31, 2002, and ending September 30, 2002.

FOR FURTHER INFORMATION CONTACT: For information regarding any of the operational aspects, contact Gregory Olsavsky, Fines, Penalties and Forfeitures Branch, Office of Field Operations, (202) 927–3119. For information regarding any of the legal aspects, contact Willem A. Daman, Office of Chief Counsel, (202) 927–6900.

SUPPLEMENTARY INFORMATION:

Background

Section 333 of the Uruguay Round Agreements Act (URAA) (Pub. L. 103–465, 108 Stat. 4809) (signed December 8, 1994), entitled Textile Transshipments, amended Part V of title IV of the Tariff Act of 1930 by creating a section 592A (19 U.S.C. 1592a), which authorizes the Secretary of the Treasury to publish in the **Federal Register**, on a semiannual basis, a list of the names of any producers, manufacturers, suppliers, sellers, exporters, or other persons located outside the Customs territory of the United States, when these entities and/or persons have been issued a penalty claim under section 592 of the Tariff Act, for certain violations of the customs laws, provided that certain conditions are satisfied.

The violations of the customs laws referred to above are the following: (1) Using documentation, or providing documentation subsequently used by the importer of record, which indicates a false or fraudulent country of origin or source of textile or apparel products; (2) Using counterfeit visas, licenses, permits, bills of lading, or similar documentation, or providing counterfeit visas, licenses, permits, bills of lading, or similar documentation that is subsequently used by the importer of record, with respect to the entry into the Customs territory of the United States of textile or apparel products;

(3) Manufacturing, producing, supplying, or selling textile or apparel products which are falsely or fraudulently labeled as to country of origin or source; and (4) Engaging in practices which aid or abet the transshipment, through a country other than the country of origin, of textile or apparel products in a manner which conceals the true origin of the textile or apparel products or permits the evasion of quotas on, or voluntary restraint agreements with respect to, imports of textile or apparel products.

If a penalty claim has been issued with respect to any of the above violations, and no petition in response to the claim has been filed, the name of the party to whom the penalty claim was issued will appear on the list. If a petition or supplemental petition for relief from the penalty claim is submitted under 19 U.S.C. 1618, in accord with the time periods established by §§171.2 and 171.61, Customs Regulations (19 CFR 171.2, 171.61) and the petition is subsequently denied or the penalty is mitigated, and no further petition, if allowed, is received within 60 days of the denial or allowance of mitigation, then the administrative action shall be deemed to be final and administrative remedies will be deemed to be exhausted. Consequently, the name of the party to whom the penalty claim was issued will appear on the list. However, provision is made for an appeal to the Secretary of the Treasury by the person named on the list, for the removal of its name from the list. If the Secretary finds that such person or entity has not committed any of the enumerated violations for a period of not less than 3 years after the date on which the person or entity's name was published, the name will be removed from the list as of the next publication of the list.

Reasonable Care Required

Section 592A also requires any importer of record entering, introducing, or attempting to introduce into the

commerce of the United States textile or apparel products that were either directly or indirectly produced, manufactured, supplied, sold, exported, or transported by such named person to show, to the satisfaction of the Secretary, that such importer has exercised reasonable care to ensure that the textile or apparel products are accompanied by documentation, packaging, and labeling that are accurate as to its origin. Reliance solely upon information regarding the imported product from a person named on the list is clearly not the exercise of reasonable care. Thus, the textile and apparel importers who have some commercial relationship with one or more of the listed parties must exercise a degree of reasonable care in ensuring that the documentation covering the imported merchandise, as well as its packaging and labeling, is accurate as to the country of origin of the merchandise. This degree of reasonable care must involve reliance on more than information supplied by the named party.

In meeting the reasonable care standard when importing textile or apparel products and when dealing with a party named on the list published pursuant to section 592A of the Tariff Act of 1930, an importer should consider the following questions in attempting to ensure that the documentation, packaging, and labeling is accurate as to the country of origin of the imported merchandise. The list of questions is not exhaustive but is illustrative.

(1) Has the importer had a prior relationship with the named party?

(2) Has the importer had any detentions and/or seizures of textile or apparel products that were directly or indirectly produced, supplied, or transported by the named party?

(3) Has the importer visited the company's premises and ascertained that the company has the capacity to produce the merchandise?

(4) Where a claim of an origin conferring process is made in accordance with 19 CFR 102.21, has the importer ascertained that the named party actually performed the required process?

(5) Is the named party operating from the same country as is represented by that party on the documentation, packaging or labeling?

(6) Have quotas for the imported merchandise closed or are they nearing closing from the main producer countries for this commodity?

(7) What is the history of this country regarding this commodity?

(8) Have you asked questions of your supplier regarding the origin of the product?

(9) Where the importation is accompanied by a visa, permit, or license, has the importer verified with the supplier or manufacturer that the visa, permit, and/or license is both valid and accurate as to its origin? Has the importer scrutinized the visa, permit or license as to any irregularities that would call its authenticity into question?

The law authorizes a semiannual publication of the names of the foreign entities and/or persons. On October 10, 2001, Customs published a Notice in the **Federal Register** (66 FR 51734) which identified 13 (thirteen) entities which fell within the purview of section 592A of the Tariff Act of 1930.

592A List

For the period ending March 30, 2002, Customs has identified 10 (ten) foreign entities that fall within the purview of section 592A of the Tariff Act of 1930. This list reflects no new entities and three removals to the 13 entities named on the list published on October 10, 2001. The parties on the current list were assessed a penalty claim under 19 U.S.C. 1592, for one or more of the four above-described violations. The administrative penalty action was concluded against the parties by one of the actions noted above as having terminated the administrative process.

The names and addresses of the 10 foreign parties which have been assessed penalties by Customs for violations of section 592 are listed below pursuant to section 592A. This list supersedes any previously published list. The names and addresses of the 10 foreign parties are as follows (the parenthesis following the listing sets forth the month and year in which the name of the company was first published in the **Federal Register**):

Austin Pang Gloves & Garments Factory, Ltd., Jade Heights, 52 Tai Chung Kiu Road, Flat G, 19/F, Shatin, New Territories, Hong Kong. (10/99)

Beautiful Flower Glove Manufactory, Kar Wah Industrial Building, 8 Leung Yip Street, Room 10–16, 4/F, Yuen Long, New Territories, Hong Kong. (10/99)

BF Manufacturing Company, Kar Wah Industrial Building, Leung Yip Street, Flat 13, 4/F, Yeun Long, New Territories, Hong Kong. (10/99)

Ease Keep, Ltd., 750 Nathan Road, Room 115, Kowloon, Hong Kong. (10/99)

Everlite Manufacturing Company, P.O. Box 90936, Tsimshatsui, Kowloon, Hong Kong (3/01).

Fabrica de Artigos de Vestuario E-Full, Lda. Rua Um doi Bairro da Concordia, Deificio Industrial Vang Tai, 8th Floor, A–D, Macau. (10/99)

Fabrica de Artigos de Vestuario Fan Wek Limitada, Av. Venceslau de Morais, S/N 14 B–C, Centro Ind. Keck Seng (Torre 1), Macau. (10/99)

Fairfield Line (HK) Co. Ltd., 60–66 Wing Tai Commer., Bldg. 1/F, Sheung Wan, Hong Kong (3/01).

G.P. Wedding Service Centre, Lee Hing Industrial Building, 10 Cheung Yue Street 11th Floor, Cheung Sha Wan, Kowloon, Hong Kong. (10/00)

Lucky Mind Industrial Limited, Lincoln Centre, 20 Yip Fung Street, Flat 11, 5/F, Fan Ling, New Territories, Hong Kong. (10/99)

Any of the above parties may petition to have its name removed from the list. Such petitions, to include any documentation that the petitioner deems pertinent to the petition, should be forwarded to the Assistant Commissioner, Office of Field Operations, United States Customs Service, 1300 Pennsylvania Avenue, NW., Washington, DC 20229.

Additional Foreign Entities

In the October 10, 2001, **Federal Register** notice, Customs also solicited information regarding the whereabouts of 5 foreign entities, which were identified by name and known address, concerning alleged violations of section 592. Persons with knowledge of the whereabouts of those 5 entities were requested to contact the Assistant Commissioner, Office of Field Operations, United States Customs Service, 1300 Pennsylvania Avenue, NW., Washington, DC 20229.

In this document, a new list is being published which contains the names and last known addresses of 3 entities. This reflects the removal of two entities from the list of 5 entities published on October 10, 2001.

Customs is soliciting information regarding the whereabouts of the following 3 foreign entities concerning alleged violations of section 592. Their names and last known addresses are listed below (the parenthesis following the listing sets forth the month and year in which the name of the company was first published in the **Federal Register**):

Au Mi Wedding Dresses Company, Dragon Industry Building, 98, King Law Street, Unit F, 9/F, Lai Chi Kok, Kowloon, Hong Kong. (10/99)

Golden Wheel Garment Factory, Flat A, 10/F, Tontex Industrial Building, 2–4 Sheung Hei Street, San Po

Kong, Kowloon, Hong Kong. (10/99)
Lai Cheong Gloves Factory, Kar Wah Industrial Building, 8 Leung Yip Street, Room 101, 1–F, Yuen Long, New Territories, Hong Kong. (3/00)

If you have any information as to a correct mailing address for any of the above 3 firms, please send that information to the Assistant Commissioner, Office of Field Operations, U.S. Customs Service, 1300 Pennsylvania Avenue, NW., Washington, DC 20229.

Dated: March 14, 2002.

Bonni G. Tischler,

Assistant Commissioner, Office of Field Operations.

[FR Doc. 02–6659 Filed 3–19–02; 8:45 am]

BILLING CODE 4820–02–P

DEPARTMENT OF THE TREASURY

Office of Thrift Supervision

Proposed Agency Information Collection Activities; Comment Request

AGENCY: Office of Thrift Supervision (OTS), Treasury.

ACTION: Notice and request for comment.

SUMMARY: The Department of the Treasury, as part of its continuing effort to reduce paperwork and respondent burden, invites the general public and other Federal agencies to comment on proposed and continuing information collections, as required by the Paperwork Reduction Act of 1995, 44 U.S.C. 3507. The Office of Thrift Supervision within the Department of the Treasury will submit the proposed information collection requirement described below to the Office of Management and Budget (OMB) for review, as required by the Paperwork Reduction Act. Today, OTS is soliciting public comments on the proposal.

DATES: Submit written comments on or before May 20, 2002.

ADDRESSES: Send comments, referring to the collection by title of the proposal or by OMB approval number, to Information Collection Comments, Chief Counsel's Office, Office of Thrift Supervision, 1700 G Street, NW., Washington, DC 20552; send a facsimile transmission to (202) 906–6518; or send an e-mail to *infocollection.comments@ots.treas.gov.* OTS will post comments and the related index on the OTS Internet Site at *www.ots.gov.* In addition, interested persons may inspect comments at the Public Reading Room, 1700 G Street, NW., by appointment. To make an appointment, call (202) 906–5922, send an e-mail to *publicinfo@ots.treas.gov,* or send a facsimile transmission to (202) 906–7755.

FOR FURTHER INFORMATION CONTACT: You can request additional information about this proposed information collection from Nadine Washington, Information Systems, Administration & Finance, (202) 906–6706, Office of Thrift Supervision, 1700 G Street, NW., Washington, DC 20552.

SUPPLEMENTARY INFORMATION: OTS may not conduct or sponsor an information collection, and respondents are not required to respond to an information collection, unless the information collection displays a currently valid OMB control number. As part of the approval process, we invite comments on the following information collection.

Comments should address one or more of the following points:

a. Whether the proposed collection of information is necessary for the proper performance of the functions of OTS;

b. The accuracy of OTS's estimate of the burden of the proposed information collection;

c. Ways to enhance the quality, utility, and clarity of the information to be collected;

d. Ways to minimize the burden of the information collection on respondents, including through the use information technology.

We will summarize the comments that we receive and include them in the OTS request for OMB approval. All comments will become a matter of public record. In this notice, OTS is soliciting comments concerning the following information collection.

Title of Proposal: Savings and Loan Holding Company Registration Statement—H–(b)10.

OMB Number: 1550–0020.

Form Number: H–(b)10.

Regulation requirement: 12 CFR 584.

Description: This information collection is used to determine a savings and loan holding company's adherence to the statutes, regulations, and conditions of approval to acquire an insured institution and whether any of the holding company's activities would be injurious to the operation of the subsidiary savings association.

Type of Review: Renewal.

Affected Public: Savings Associations.

Estimated Number of Respondents: 72.

Estimated Frequency of Response: Annually.

Estimated Burden Hours per Response: 8 hours.

Estimated Total Burden: 576 hours.

Clearance Officer: Sally W. Watts, (202) 906–7380, Office of Thrift Supervision, 1700 G Street, NW., Washington, DC 20552.

OMB Reviewer: Alexander Hunt, (202) 395–7860, Office of Management and Budget, Room 10202, New Executive Office Building, Washington, DC 20503.

Dated: March 13, 2002.

Deborah Dakin,

Deputy Chief Counsel, Regulations and Legislation Division.

[FR Doc. 02–6640 Filed 3–19–02; 8:45 am]

BILLING CODE 6720–01–P

DEPARTMENT OF VETERANS AFFAIRS

Veterans' Advisory Committee on Education; Notice of Meeting

The Department of Veterans Affairs (VA) gives notice under the Federal Advisory Committee Act, Public law 92–463, that a meeting of the Veterans' Advisory Committee on Education, authorized by 38 U.S.C. 3692, will be held March 25 and 26, 2002. The meeting will take place at the offices of the Servicemembers Opportunity Colleges, 1307 New York Avenue, Washington, DC. On Monday, March 25, the meeting will begin at 9 a.m. and end at 4 p.m. On Tuesday, March 26, the meeting will begin at 9 a.m. and end at 12 p.m. The purpose of the Committee is to assist in the evaluation of existing programs and services, and recommend needed programs and services.

On March 25, the meeting will begin with opening remarks and an overview by Dr. Steve Kime, Committee Chairman. The Committee will discuss the Partnership for Veterans' Education and recent legislation, including new standards and guidelines to be created. In the afternoon, the Committee will receive briefings on the Veterans' Claims Processing Task Force's report; GAO Study 02–368, Veterans' Education Benefits Comparison of Federal Assistance Awarded to Veterans and Nonveterans Students; and Access and Technology, Web Portal Concept. On March 26, the Committee will review major issues addressed by the Committee in the past and their current status and any new issues they feel should be introduced. The meeting will conclude with a discussion regarding developing the Committee's report.

The meeting is open to the public. Interested persons may attend, appear before, or file statements with the Committee. Statements, if in written form, may be filed before or within 10 days after the meeting. Oral statements will be heard at 9:30 a.m., Tuesday, March 26, 2002. Those wishing to

attend or file written statements should contact Mr. Michael Yunker, Education Strategy Development (224B), Department of Veterans Affairs, 810 Vermont Avenue, NW, Washington, DC 20420, phone (202) 273–7187.

Dated: March 13, 2002.

By Direction of the Secretary:

Nora E. Egan,

Committee Management Officer.

[FR Doc. 02–6769 Filed 3–19–02; 8:45 am]

BILLING CODE 8320–01–M

DEPARTMENT OF VETERANS AFFAIRS

Privacy Act of 1974; Report of Matching Program

AGENCY: Department of Veterans Affairs.

ACTION: Notice.

SUMMARY: Notice is hereby given that the Department of Veterans Affairs (VA) intends to continue a recurring computer program matching Social Security Administration (SSA) records with VA pension and parents' dependency and indemnity compensation (DIC) records.

The goal of this match is to compare income and employment status as reported to VA with wage records maintained by SSA.

VA plans to match records of veterans, surviving spouses and children who receive pension, and parents who receive DIC, with SSA income tax return information as it relates to earned income. VA will also match records of veterans receiving disability compensation at the 100 percent rate based on unemployability with SSA income tax return information as it relates to earned income.

VA will use this information to adjust VA benefit payments as prescribed by law. The proposed matching program will enable VA to ensure accurate reporting of income and employment status.

Records To Be Matched: VA records involved in the match are the VA system of records, Compensation, Pension, Education and Rehabilitation Records—VA (58 VA 21/22). The SSA records will come from the Earnings Recording and Self-Employment Income System, SSA/OSR, 60–0059.

This notice is provided in accordance with the provisions of the Privacy Act of 1974 as amended by Public Law 100–503.

DATES: The match will start no sooner than April 19, 2002, and end not more than 18 months after the agreement is properly implemented by the parties. The involved agencies' Data Integrity Boards (DIB) may extend this match for 12 months provided the agencies certify to their DIBs within three months of the ending date of the original match that the matching program will be conducted without change and that the matching program has been conducted in compliance with the original matching program.

ADDRESSES: Interested persons are invited to submit written comments, suggestions, or objections regarding the proposal to conduct the matching program to the Director, Office of Regulations Management (02D), Department of Veterans Affairs, 810 Vermont Avenue, NW, Room 1154, Washington, DC 20420. All written comments received will be available for public inspection in the Office of Regulations Management, Room 1158, 810 Vermont Avenue, NW, Washington, DC 20420, between 8 a.m. and 4:30 p.m., Monday through Friday except holidays.

FOR FURTHER INFORMATION CONTACT: Paul Trowbridge (212B), (202) 273–7218.

SUPPLEMENTARY INFORMATION: This information is required by Title 5 U.S.C. subsection 552a(e)(12), the Privacy Act of 1974. A copy of this notice has been provided to both Houses of Congress and OMB.

Approved: March 5, 2002.

Anthony J. Principi,

Secretary of Veterans Affairs.

[FR Doc. 02–6632 Filed 3–19–02; 8:45 am]

BILLING CODE 8320–01–P

Notices

Federal Register
Vol. 67, No. 54
Wednesday, March 20, 2002

This section of the FEDERAL REGISTER contains documents other than rules or proposed rules that are applicable to the public. Notices of hearings and investigations, committee meetings, agency decisions and rulings, delegations of authority, filing of petitions and applications and agency statements of organization and functions are examples of documents appearing in this section.

ADVISORY COUNCIL ON HISTORIC PRESERVATION

Draft Program Comment Regarding the Management of Wherry and Capehart Era Army Family Housing

AGENCY: Advisory Council on Historic Preservation.

ACTION: Notice of intent to issue program comment on Capehart and Wherry Era army family housing.

SUMMARY: The Army is formulating its plan on how to manage its inventory of Capehart and Wherry Era housing. In order to better meet its Federal historic preservation responsibilities in managing these properties, the Army has requested the Advisory Council on Historic Preservation to comment on the overall management of such properties, as opposed to submitting each individual undertaking under such management to a separate review. The Council has drafted such a comment. It now seeks public input on that draft.

DATES: Submit comments on or before April 19, 2002.

ADDRESSES: Address all comments concerning this proposed program comment to Dave Berwick, Army Affairs Coordinator, Office of Federal Agency Programs, Advisory Council on Historic Preservation, 1100 Pennsylvania Avenue, NW., Suite 809, Washington, DC 20004. Fax (202) 606–8672. You may submit electronic comments to: *dberwick@achp. gov.*

FOR FURTHER INFORMATION CONTACT: Dave Berwick, (202) 606–8505.

SUPPLEMENTARY INFORMATION: Section 106 of the National Historic Preservation Act requires Federal agencies to consider the effects of their undertakings on historic properties and provide the Advisory Council on Historic Preservation (''Council'') a reasonable opportunity to comment with regard to such undertakings. The Council has issued the regulations that set forth the process through which Federal Agencies comply with these duties. Those regulations are codified under 36 CFR part 800 (''Section 106 regulations'').

Under § 800.14(e) of those regulations, agencies can request the Council to provide a ''Program Comment'' on a particular category of undertakings in lieu of conducting individual reviews of each individual undertaking under such category, as set forth in 36 CFR 800.4 through 800.6. An agency can then meet its Section 106 responsibilities for those undertakings by taking into account the Council's Program Comment and by following the steps set forth in those comments.

The Army has requested such a Program Comment to cover management of its Capehart and Wherry Era housing. A copy of the draft Program Comment can be found at the end of this notice. Once the public input resulting from this notice is considered, the Council will decide whether to issue a final Program Comment to the Army.

Background on the Capehart and Wherry Army Family Housing Program

Military housing constructed during the 1949–1962 period is commonly called Capehart and Wherry Era housing after the two United States Senators who sponsored national military housing construction programs to address inadequate and substandard military family housing at military installations across the nation. Senator Wherry's program, implemented 1949–1955, allowed developers to construct, own, and maintain military housing on Department of Defense (''DoD'') (in this case Army) lands with FHA-insured mortgages. DoD guaranteed occupancy, agreed to long-term leases, and discounted utility rates in exchange for the developer's agreement to established set rental rates and preferential leases for military families. Senator Capehart's program, implemented 1955–1962, called for DoD to purchase the new housing constructed by developers, and to purchase the developer-owned housing previously constructed under the Wherry housing program. DoD remained responsible for operation, maintenance and repair of this housing. Approximately 19,036 buildings constructed during the Capehart-Wherry Era remain in the Army's inventory of family housing.

Approximately 52% of the Army's entire military family housing stock remain from those built during the Capehart and Wherry military family housing construction program between 1949 and 1962. Structures associated with this family housing include detached garages, carports and storage buildings, and the landscape features (including but not limited to the overall design and layout of the Capehart and Wherry Era communities, including road patterns, plantings and landscaping, open spaces, playgrounds, parking areas, signage, site furnishings, views into and out of the community, lighting, sidewalks, setbacks and all other associated cultural landscape features). A small percentage of buildings and structures constructed during this time period were not constructed with funds provided through the Capehart and Wherry funding programs, but are similar in all other respects, and are therefore included as part of this action.

Capehart and Wherry Era buildings were largely constructed from off-the-shelf commercially available plans and specifications and range from single-family detached houses, to multi-unit row houses, duplexes, four-plexes, and multi-story apartment buildings. Brick, frame, cement block, and stucco were typical building materials. While architectural styles were largely consistent, there was some variation including elements of International style and Colonial Revival style. Developers, consistent with principles guiding civilian neighborhood design at the onset of the ''baby boom,'' paid attention to comprehensive neighborhood planning and design. Overall, the Army's Capehart and Wherry Era housing, associated structures, and landscape features reflect the ubiquitous, nation-wide suburban subdivision construction trends of this period.

The Army anticipates that all of it's Capehart-Wherry Era family housing, associated structures and landscape features will be subject to the following categories of undertakings: Maintenance and repair, rehabilitation, renovation, layaway and mothballing, demolition and replacement, and transfer, sale or lease out of government control. The Army is requesting that the Council provide a Program Comment on these categories of undertakings for Army

Capehart Wherry Era family housing, associated structures and landscape features.

The Army is requesting a Program Comment as an Army-wide Section 106 compliance action related to management of Capehart and Wherry era housing, associated structures and landscape features. This programmatic approach will facilitate management actions for privatization and transfer out of federal agency ownership, substantial alteration through renovation, and demolition and replacement of Capehart and Wherry Era housing, associated structures and landscape features that are listed or eligible for listing on the National Register of Historic Places. Therefore, there is the potential for adverse effects to historic properties.

The following is the full text of the draft Program Comment:

Program Comment for Capehart and Wherry Era Army Family Housing

I. Introduction

This Program Comment provides the Department of the Army (Army) with an alternate way to comply with its responsibilities under Section 106 of the National Historic Preservation Act with regard to the following actions in the management of the Capehart and Wherry Era Army family housing: privatization and transfer out of federal agency ownership, substantial alteration through renovation, and demolition and replacement of Capehart and Wherry Era housing, associated structures and landscape features that may be eligible for listing on the National Register of Historic Places.

II. Treatment of Capehart and Wherry Properties

a. Eligibility

The Army has conducted a historic context of its Capehart and Wherry properties. It is documented in a report entitled *For Want of a Home: A Historic Context for Wherry and Capehart Military Family Housing.* On May 22, 2001, the Army sponsored a symposium on Capehart and Wherry Era housing management as it relates to historic preservation. The symposium was attended by preservation experts, including the National Trust for Historic Preservation (Trust), the National Conference of State Historic Preservation Officers (NCSHPO), the Advisory Council on Historic Preservation, and nationally recognized experts in the field of historic preservation from academia and industry. Symposium participants recommended a programmatic approach to complying with Section 106, which is presented in the treatment section outlined below. The Army considers its inventory of Capehart and Wherry properties, including any associated structures and landscape features, to be eligible for the National Register of Historic Places for the purposes of Section 106 compliance.

b. Treatment

The Army has requested a Program Comment as an Army-wide Section 106 compliance action related to management of Capehart and Wherry Era housing, associated structures and landscape features. This programmatic approach will facilitate management actions for privatization and transfer out of Federal agency ownership, substantial alteration through renovation, and demolition and replacement of Capehart and Wherry Era housing, associated structures and landscape features. Such actions present a potential for adverse effects to historic properties.

Based on recommendations coming out of the symposium and follow-up meetings between the Council, the Trust and NCSHPO, the Army has proposed the following three step approach to the treatment of its Capehart and Wherry properties:

(i) The Army will expand and revise the existing historic context, *For Want of a Home: A Historic Context for Wherry and Capehart Military Family Housing.* Consistent with issues identified during the symposium on Capehart and Wherry Housing held by the Army in May 2001, and public review, the historic context will be expanded to address a number of important issues. It will explore changing Army family demographics following the end of the World War II and their impact on housing needs and responsive programs. The context will also focus on post-World War II suburbanization, housing trends and affordable housing programs in the civilian sector. In addition, the context will be expanded to consider the importance of historically important builders, developers and architects that may have been associated with design and construction of Capehart and Wherry Era housing developments at specific Army installations. In addition to addressing the housing units, the context will discuss associated structures, and landscape features. Finally, the context will describe the inventory of Capehart and Wherry Era Housing, providing information on the various types of buildings and architectural styles and the quantity of each.

(ii) The Army will develop Capehart and Wherry Era Neighborhood Design Guidelines. The scoping process identified landscape features as an important attribute of Capehart and Wherry Era land-use planning and development. Neighborhood Design Guidelines would address this issue and be distributed Army-wide. In this manner, Capehart and Wherry Era landscape features would be considered as the Army manages military family housing.

(iii) The Army will document Capehart and Wherry Era housing, associated structures and landscape features through preparation of a video. The video will document representative structural types and landscape features at three installations, and explain the relationship of this housing construction program to topics researched for the expanded historic context. The video will be distributed for educational purposes, and archived by the Army.

The Council believes that this three step approach will ensure that the Army takes into account the effects of management of its Capehart and Wherry Era housing.

III. Applicability

This Program Comment does not apply to the following properties that are listed, or eligible for listing, on the National Register of Historic Places: (a) Archeological sites, (b) properties of traditional religious and cultural significance to federally recognized Indian tribes or Native Hawaiian organizations, or (c) historic properties other than Army Capehart and Wherry Era housing, associated structures and landscape features.

IV. Effect of Program Comment

By following this comment and outlined three step approach, the Army will have met its responsibilities for compliance under Section 106 regarding management of its Capehart and Wherry Era housing. Accordingly, installations will not have to follow the case-by-case Section 106 review process for each individual management action.

The Army may carry out management actions prior to the completion of all of the three treatment steps outlined above, so long as such management actions do not preclude the eventual successful completion of those three steps.

If the Council determines that the consideration of Capehart and Wherry properties is not being carried out in a manner consistent with this Program Comment, the Council may withdraw this comment. Following such

withdrawal, the Army would comply with the requirements of 36 CFR §§ 800.3 through 800.7 for each individual management action.

Authority: 36 CFR 800.14(e).

Dated: March 15, 2002.

John M. Fowler,

Executive Director.

[FR Doc. 02–6706 Filed 3–19–02; 8:45 am]

BILLING CODE 4310–10–M

DEPARTMENT OF AGRICULTURE

Agricultural Marketing Service

[Docket Number FV–02–335]

United States Standards for Grades of Apple Juice from Concentrate

AGENCY: Agricultural Marketing Service, USDA.

ACTION: Reopening and extension of the comment period.

SUMMARY: Notice is hereby given that the comment period on the proposed notice to create a new United States Standard for Grades of Apple Juice from Concentrate is reopened and extended.

DATES: Comments may be submitted on or before April 19, 2002.

ADDRESSES: Written comments may be submitted to: Lydia E. Berry, Processed Products Branch, Fruit and Vegetable Programs, Agricultural Marketing Service, U.S. Department of Agriculture, STOP 0247, 1400 Independence Avenue, SW., Washington, DC 20250–0247; fax (202) 690–1087; or e-mail *lydia.berry@usda.gov.* Comments should reference the date and page of this issue of the **Federal Register**. All comments received will be made available for public inspection at the address listed above during regular business hours and on the Internet.

The draft of the United States Standards for Grades of Apple Juice from Concentrate is available either through the address cited above or by accessing the AMS Home Page on the Internet at: *www.ams.usda.gov/fv/ppb.html.* Any comments received, regarding this proposed standard will also be posted on that site.

FOR FURTHER INFORMATION CONTACT: Lydia E. Berry at (202) 720–5021 or e-mail at lydia.berry@usda.gov.

SUPPLEMENTARY INFORMATION: A notice was published in the **Federal Register** (66 FR 58430 to 58431; November 21, 2001) requesting comments on a proposal to create a United States Standard for Grades of Apple Juice From Concentrate. The action would create grade standards for apple juice from concentrate that will include a description of the product, style, grades, ascertaining the grade by sample, and ascertaining the grade by lot. The proposed standard would provide a common language for trade, a means of measuring value in the marketing of apple juice from concentrate, and provide guidance in the effective utilization of apple juice from concentrate.

Congressional representatives representing a major apple producing area requested that additional time be provided for interested persons to comment on the proposed standard. The Congressmen believe that extending the comment period will enable the many growers and processors in their districts that have voiced their concern to their offices to respond to our solicitation for comments.

After reviewing the request, the Department is reopening and extending the common period in order to allow sufficient time for all interested persons to file comments.

This notice provides for a 30 day comment period for interested parties to comment on changes to the standards.

Dated: March 14, 2002.

A.J. Yates,

Administrator, Agricultural Marketing Services.

[FR Doc. 02–6691 Filed 3–19–02; 8:45 am]

BILLING CODE 3410–02–M

DEPARTMENT OF AGRICULTURE

Forest Service

Lost Cabin Mine, Medicine Bow-Routt National Forests, Carbon County, WY

AGENCY: Forest Service, USDA.

ACTION: Notice of intent to prepare an environmental impact statement.

SUMMARY: The Forest Service will prepare an Environmental Impact Statement (EIS) to assess and disclose the environmental effects of lode and placer exploration at the Lost Cabin Mine. The Lost Cabin Mine is located in Township 14 North, Range 86 West, Sections 1 and 12 in Carbon County, Wyoming. Mining operations would include repairing three existing shafts and obtaining ore samples from four un-patented lode claims. A small loader and track-hoe would be used to obtain the samples, and samples would be crushed on-site and transported from the area using four-wheel and six-wheel all terrain vehicles (ATV's). Approximately 1.6 miles of an existing, closed road (Way 4170) that historically accessed the mine area would need to be widened and repaired to allow access to the site. Roughly ⅛ mile of road would also need to be constructed to link the four un-patented lode claim sites.

An historical search of Government Land Office plats indicate that a ''wood road'' accessed the mine site as early as 1899. By 1901, an ''improved road'' that accessed Vulcan Mountain from Saratoga, Wyoming was in place. This road also provided a direct link with the Southern Wyoming Tramway which carried mined ore to a smelter in Encampment, Wyoming. It further provided access to other major mining communities in the near vicinity. Although the road is depicted on Forest Service maps through 1956, more recent maps do not indicate that it is still a part of the Forest Transportation System.

The Lost Cabin Mine is located in the Mowry Peak inventoried roadless area, as described in Appendix G to the Final EIS for the Medicine Bow National Forest Land and Resource Management Plan. If the project is approved as proposed, the proponent would be allowed to widen and repair two miles of an existing, closed road and construct roughly ⅛ mile of road within the roadless area boundary. The EIS will comply with the requirements of the National Environmental Policy Act (42 U.S.C. sections 4321–4370a), the National Forest Management Act (16 U.S.C. 1600–1614), and the U.S. Mining Laws (30 U.S.C. 21–54), and their implementing regulations.

PROJECT PURPOSE: The purpose of the Lost Cabin Mine analysis is to determine how the surface use connected with operations authorized by the United States mining laws (30 U.S.C. 21–54), which grant a statutory right to enter upon public lands to search for mineral deposits, shall be conducted to minimize adverse environmental impacts on National Forest System surface resources. It is not the purpose of the analysis to determine management of mineral resources. The responsibility for that determination lies with the Secretary of the Interior.

DATES: Comments concerning the proposal and the scope of the analysis will be accepted and considered at any time after publication of this notice in the **Federal Register** and prior to a decision being made. All comments and suggestions are welcome.

ADDRESSES: Send written comments to Melissa Martin, Medicine Bow-Routt National Forest Supervisor's Office, 2468 Jackson Street, Wyoming 82070. Electronic mail (e-mail) may be sent to *mmmartin@fs.fed.us* and FAX may be

sent to (307) 745–1398. Telephone: (307) 745–2371.

FOR FURTHER INFORMATION CONTACT: Tom Florich, Recreation and Lands Program Manager, Medicine Bow-Routt National Forests, 2468 Jackson Street, Laramie, Wyoming, 82070. Telephone: (307) 745–2435.

SUPPLEMENTARY INFORMATION:

Decision To Be Made

The Responsible Official will consider the results of the analysis and its findings and then document the final decision in a Record of Decision (ROD). The decision will include a determination as to where and under what terms and conditions the proponent may access the Lost Cabin Mine while also protecting the surface natural resources in the area and providing for public safety.

Responsible Official

Rick Cables, Regional Forester, USDA Forest Service, Rocky Mountain Region, 740 Simms Street, Golden, Colorado 80401 is the official responsible for making the decision on this action. He will document his decision and rationale in a Record of Decision.

Preliminary Issues

Proposed construction/reconstruction of access roads to the lode sites could alter the character of the Mowry Peak roadless area.

Public Involvement

Public scoping describing the Plan of Operations associated with the Lost Cabin Mine was initiated on January 7, 2002, and 17 comment letters were received. All comments received from the January 7, 2002 scoping effort will be combined with comments received as a result of this Notice of Intent. Comments from both scoping efforts will be reviewed to identify potential issues for this analysis. Since the previously received comments will be incorporated into this analysis, individuals who responded to the January 7, 2002 scoping request need to provide comments at this time only if they wish to provide additional information to what they previously submitted. While comments are welcome at any time, comments received within 30 days of the publication of this notice in the **Federal Register** will be most useful for the identification of issues and the analysis of alternatives. As previously mentioned, comments may be sent by electronic mail (e-mail) to *mmmartin@fs.fed.us.* Written comments may be mailed to the Medicine Bow-Routt National Forests, 2468 Jackson Street, Laramie, Wyoming 82070, attention: Melissa Martin. Please reference the *Lost Cabin Mine EIS* on the subject line. The name and mailing address of the commenter should be provided with their comments so that future documents pertaining to this environmental analysis and the decision can be provided to interested parties.

Estimated Dates for Filing

The draft EIS is expected to be filed with the Environmental Protection Agency (EPA) and available for public review during July, 2002. At that time, the EPA will publish a Notice of Availability (NOA) of the draft EIS in the **Federal Register**. The comment period on the draft EIS will be for a period of not less than 45 days from the date the EPA publishes the NOA in the **Federal Register**. It is important that those interested in the management of this area to comment at that time. The final EIS is expected to be available in October 2002. In the final EIS, the Forest Service will respond to any comments received during the public comment period that pertain to the environmental analysis. Those comments and the Forest Service responses will be disclosed and discussed in the final EIS and will be considered when the final decision about this proposal is made.

Release of Names

Comments received in response to this solicitation, including names and addresses of those who comment, will be considered part of the public record on this Proposed Action and will be available for public inspection. Comments submitted anonymously will be accepted and considered; however, those who submit anonymous comments will not have standing to appeal the subsequent decision under 36 CFR parts 215 or 217. Additionally, pursuant to 7 CFR 1.27 (d), any person may request the agency to withhold a submission from the public record by showing how the Freedom of Information Act (FOIA) permits such confidentiality. Persons requesting such confidentiality should be aware that, under the FOIA, confidentiality may be granted in only very limited circumstances, such as to protect trade secrets. The Forest Service will inform the requester of the agency's decision regarding the request for confidentiality, and where the request is denied, the agency will return the submission and notify the requester that the comments may be resubmitted with or without name and address within ten (10) days.

The Public's Obligation To Comment

The Forest Service believes it is important to give reviewers an early notice of several court rulings related to public participation in the environmental review process. First, reviewers of draft EIS's must structure their participation in the environmental review of the proposal so that it is meaningful and alerts an agency to the reviewer's position and contentions. *Vermont Yankee Nuclear Power Corp.* v. *NRDC,* 435 U.S. 519, 553 (1978). Also, environmental objections that could be raised during the draft EIS stage, but are not raised until after completion of the final EIS, may be waived or dismissed by the courts. *City of Angoon* v. *Hodel,* 803 F.2d 1016, 1022 (9th Cir. 1986) and *Wisconsin Heritages, Inc.* v. *Harris,* 490 F. Supp. 1334, 1338 (E.D. Wis. 1980). As a result of these previous court rulings, it is very important that those interested in this proposed action participate by the close of the 45-day comment period so that substantive comments and objections are made available to the Forest Service at a time when it can meaningfully consider them and respond to them in the final EIS. To assist the Forest Service in identifying and considering issues and concerns related to the proposed action, comments on this draft EIS should be as specific as possible. It is also helpful if comments refer to specific pages or chapters of the draft document. Comments may also address the adequacy of the Draft Environmental Impact Statement or the merits of the alternatives displayed in the document. Reviewers should refer to the Council on Environmental Quality Regulations at 40 CFR 1503.3 for implementing the procedural provisions of the National Environmental Policy Act for addressing these points. Please note that any comments that are submitted in relation to this draft EIS will be considered public information.

Dated: March 12, 2002.

Rick Cables,

Regional Forester.

[FR Doc. 02–6674 Filed 3–19–02; 8:45 am]

BILLING CODE 3410–GM–P

DEPARTMENT OF AGRICULTURE

Forest Service

Revised Land and Resource Management Plan for the Shawnee National Forest (Alexander, Gallatin, Hardin, Jackson, Johnson, Massac, Pope, Saline, Williamson, and Union Counties, IL)

AGENCY: Forest Service, USDA.

ACTION: Notice of Intent to prepare Environmental Impact Statement (EIS).

SUMMARY: The USDA Forest Service intends to prepare an EIS for revising the Shawnee National Forest Land and Resource Management Plan (Forest Plan) pursuant to 16 U.S.C. 1604(f)(5) and USDA Forest Service National Forest System Land and Resource Management Planning regulations. The revised Forest Plan will supersede the Forest Plan, which the Regional Forester approved November 24, 1986, and the significant amendment approved May 14, 1992. This Notice describes the focus areas of change, the estimated dates for filing the EIS, the information concerning public participation, and the names and addresses of the responsible agency official and the individual who can provide additional information.

DATES: We need to receive your comments on this Notice of Intent (NOI) in writing within 60 days after this notice is published in the **Federal Register**. The Draft EIS should be available for public review by December 2003. The Final EIS and revised Forest Plan should be completed by September 2004.

ADDRESSES: Send written comments to: NOI–FP Revision, Shawnee National Forest, 50 Hwy. 145 South, Harrisburg, IL 62946. Or direct electronic mail to *mlross@fs.fed.us* Attn: Forest Plan Revision.

FOR FURTHER INFORMATION CONTACT: Forest Planner, at 618–253–7114. TDY 618–253–1070, or direct electronic mail to: *mlross@fs.fed.us* or access the Forest web page at *www.fs.fed.us/r9/shawnee.*

RESPONSIBLE OFFICIAL: Regional Forester, Eastern Region, 310 W. Wisconsin Ave, Milwaukee, Wisconsin 53203.

SUPPLEMENTARY INFORMATION: The Regional Forester for the Eastern Region gives notice of the agency's intent to prepare an EIS to revise the Shawnee National Forest Plan. The Regional Forester approved the original Shawnee National Forest Plan in November 1986. In May 1992, the Regional Forester approved a significant amendment that substantially replaced the 1986 Forest Plan. This plan guides the overall management of the Shawnee National Forest. We make six primary decisions in the Forest Plan:

1. Forest-wide multiple-use goals and objectives;
2. Forest-wide management requirement;
3. Management area direction;
4. Lands suited and not suited for resource use and production (timber management, etc.);
5. Monitoring and evaluation requirements; and
6. Recommendations to Congress (such as wilderness), if any.

By the requirements of the National Forest Management Act, national forests must revise the Forest Plan every 10–15 years (U.S.C. 1604(f)(5)). At this time, there are three reasons to revise the 1986 and 1992 Amended Forest Plans: (1) The National Forest Management Act of 1976 requires that such plans be revised every 10–15 years (the Regional Forester approved the original Shawnee National Forest Plan in November 1986 and approved the Amended Shawnee National Forest Plan in May 1992); (2) Court direction for additional analysis of certain portions of the 1992 Amended Forest Plan; and (3) agency goals and objectives, along with other national guidance for strategic plans and programs, have changed; The agency Government Performance and Results Act Strategic Plan (2000) has shifted the course of agency program emphasis to sustainability.

In many southern Illinois communities, people value the opportunities public forests provide for enjoying recreation, solitude, nature study, and scenic beauty. People also expect important products from managed forests, such as game species for hunting, commercial recreation events, wood products, and minerals. The Shawnee National Forest is integral to the sense of place for communities across southern Illinois. When making decisions in the revised plan, we would examine economic and social impacts to local communities and at a broader regional level, as well as biological impacts.

We propose to focus our analysis on topics identified as being most critically in need of change. These were identified through public comment and monitoring and evaluation.

Plan Opportunities, Goals and Objectives: We propose changing the Forest Plan's opportunities, goals and objectives by changing the timber resource management goal to a goal for promoting forest ecosystem health and sustainability. This would also result in changes to Forest Plan objectives and standards and guidelines related to timber resource management.

Revision Topics:

1. Watershed Resources,
2. Biological Diversity and Wildlife/Aquatic Habitat;
3. Recreation Management;
4. Forest Ecosystem Health and Sustainability;
5. Mineral Resources;
6. Wilderness, Roadless Areas, Wild and Scenic Rivers; and
7. Land Ownership Adjustment.

Additional detail on the revision topics is available on request, in the form of the document titled ''Need for Change, Description of Proposal for Revising the Forest Plan of the Shawnee National Forest''. You are encouraged to review this additional document before commenting on the NOI. You may request the additional information by calling the phone number listed above, by writing or e-mailing to the addresses listed in this notice, or by accessing the Forest web page at *www.fs.fed.us/r9/shawnee.*

We propose the following direction or actions for each topic:

1. Watershed Resources:

- Develop a management prescription 6.2 and standards and guidelines for Inahgeh lands and other lands on the historic Mississippi River floodplain;
- Develop a management prescription 6.1 for priority watersheds that provide local drinking water supplies;
- Establish criteria for prioritizing watershed protection and restoration; and
- Review and update the riparian area filterstrip standards and guidelines (6.3 management prescription).

2. Biological Diversity, Wildlife and Aquatic Habitat:

- Refine management direction for forest interior birds;
- Create a 6.7 management prescription for large openland habitat;
- Review Forest-wide standards and guidelines for wildlife opening management;
- Revise standards and guidelines for threatened and endangered species and other species of concern;
- Identify and protect ecosystems at risk of loss or degradation;
- Develop criteria for control of invasive species that are presently degrading native ecosystems;
- Modify current list of Management Indicator Species to represent all communities;
- Develop management area prescriptions and standards and guidelines for habitat restoration in Inahgeh lands;
- Adjust the boundary of the 1.3 management area at Oakwood Bottoms

Greentree Reservoir to include recently acquired adjacent forested lands;

• Revise the standards and guidelines pertaining to pesticide use for fish and wildlife management purposes; and

• Review list of species of recreation interest.

3. Recreation Management:

• Expand recreation management goal to include providing a comprehensive system of designated trails that are marked, mapped, designed, and maintained for all season use;

• Restrict equestrian use to system trails and to roads open to vehicular travel;

• Eliminate the Amended Forest Plan map pertaining to ATV/OHM travelways and hiker/equestrian trail corridors;

• Allow ATV/OHM use for access to National Forest land on selected Forest System roads (primarily lower standard local system roads) and close those roads to use by vehicles over 50 inches wide;

• The ATV Access Permit for people with disabilities will be discontinued because all users will be allowed to access the Forest using ATV/OHM's on certain roads;

• Allow mountain bike use on open roads and on designated trails, and provide for links to the rails-to-trails system, where available;

• Revise recreation goal statement to include both developed and dispersed recreation management, emphasizing increased benefits to the public and cost-effective operation. Provide direction to evaluate continued operation of low use or high unit cost recreation areas, and provide direction for new recreation developments; and

• Convert visual management direction from the Visual Management System to the new national Scenery Management System.

4. Forest Ecosystem Health and Sustainability:

• Replace the timber resource management goal with a goal to provide for and enhance forest ecosystem health and sustainability;

• The land base suitable for timber production and the associated allowable sale quantity will be re-evaluated;

• Revise timber management objectives and standards and guidelines;

• Maintain a dominance of oak-hickory in management areas 1.3, 2.1, and 6.6. Add an oak-hickory objective for other management areas based on historic occurrence and ecological landtypes;

• Drop objective for range management except for research purposes;

• Subdivide the 2.1 and 6.6 management areas to reflect differences along ecological boundaries;

• Change management area designation of Fountain Bluff and Iron Mountain from 8.3 to 6.6, to allow for active vegetation management, while providing for protection of heritage resources;

• Revise the standards and guidelines pertaining to pesticide use; and

• Address the control of invasive species and noxious weeds through Forest-wide standards and guidelines.

5. Mineral Resources:

• Decide on suitability and availability regarding oil and gas leasing. No decision will be made on consent to lease at the Forest Plan level; and

• With regard to other direction on oil, gas, and other minerals, no change will be made in the Amended Plan.

6. Wilderness, Roadless Areas, Wild and Scenic Rivers:

• Based on the results of a Forest-wide roadless area analysis, recommendations to Congress for wilderness may be developed;

• Develop appropriate management prescriptions for the Camp Hutchins area and the inventoried roadless area known as Burke Branch and other roadless areas if they are not recommended for wilderness designation;

• Modify standards and guidelines for 5.1 management prescription based on the physical and social issues regarding wilderness, as identified during the Forest Plan revision process;

• Delete 5.2 management area designations;

• Increase the allowable system trail densities in wilderness to a maximum of 2 miles of trail per square mile.

• Formulate management area standards and guidelines for cemetery access and maintenance in wilderness; and

• Complete the classification process of the six streams eligible for study as part of the Wild and Scenic River System, and revise the 9.2 management prescription standards and guidelines to reflect the results of the classification process. If any additional rivers are identified for potential wild and scenic river designation, we will determine their eligibility and highest potential classification.

7. Land Adjustment:

• Revise prioritization list standard and guideline for surface ownership to include the 6.6 management prescription, remove the 5.2 management prescription, and incorporate other management prescriptions that may be identified;

• Recommend a boundary adjustment that incorporates portions of the Mississippi River floodplain into the proclamation boundary and eliminates portions of the proclamation boundary where additional acquistion is not likely;

• Eliminate the Forest Consolidation Map;

• Emphasize acquisition of all available property rights in each land adjustment case; and

• Provide recommendation for statutory boundary adjustment.

New Planning Regulations: The Department of Agriculture published new planning regulations in November of 2000. Concerns regarding the ability to implement these regulations prompted a review with probable revision of these regulations. On May 10, 2001 USDA Secretary Veneman signed an interim final rule extending for one year the May 9, 2001 date by which all land and resource management plan amendments and revisions will be subject to the requirements of the new planning rule adopted November 9, 2000. The interim rule provides that May 9, 2002 a responsible official may elect to continue or to initiate new plan amendments or revisions under the 1982 planning regulations or that the responsible official may initiate amendments or revisions under the new planning rule. The Shawnee National Forest will proceed under the 1982 planning regulations.

Range of Alternatives: We will consider a range of alternatives when revising the Forest Plan. The alternatives will address different options to resolve issues over the focus areas of change listed above and to fulfill the purpose and need. A ''no-action alternative'' is required, meaning that management would continue under the existing Forest Plan. Alternatives will provide different ways to address and respond to issues identified during the scoping process.

The alternatives will display different mixes of recreation opportunities and experiences. Alternatives will display different mixes of wildlife habitats across the forest. The mix will vary by the objectives of the particular alternative, though each alternative will strive to provide habitat necessary to maintain viable populations of plant and animal species. We will analyze alternatives that examine different levels of vegetation management, including more and less timber harvest. Management of roadless areas will vary by the objectives of any particular alternative, physical criteria for

evaluating each individual roadless area, and public input.

We may make other minor changes, particularly in the guidance chapter of the Forest Plan, to reflect changes made when addressing the above revision topics.

Inviting Public Participation: We are now soliciting comments and suggestions from federal agencies, state and local governments, individuals, and organizations on the scope of the analysis to be included in the DEIS for the revised Forest Plan (40 CFR 1501.7). Comments should focus on: (1) The proposal for revising the Forest Plan; (2) possible alternatives for addressing issues associated with the proposal; and (3) identify any possible impacts associated with the proposal based on an individual's civil rights (race, color, national origin, age, religion, gender, disability, political beliefs, sexual orientation, marital or family status). We will encourage public participation in the environmental analysis and decision-making process.

In spring 2002 we are releasing our NOI and proposal. We will have many types of public involvement including 60-day formal comment period, public meetings, written comments, website, and e-mail.

Following publication of this NOI, the Forest Service will host a series of public meetings to (1) Establish multiple opportunities for the public to generate ideas, concerns, and alternatives, (2) present and clarify proposed changes to the Forest Plan; (3) describe ways that individuals can respond to this NOI; and (4) accept comments from the public on this proposal for revising the Forest Plan.

In the year 2002 we will work on alternative development and issue validation. We will have many types of public involvement including: public workshops, collaborative meetings, written comments, website, and e-mail.

In the year 2003 we will release our proposed revised Forest Plan and DEIS. We will have many types of public involvement including 90-day formal comment period, public meetings, and written comments.

During 2004 we will release the decision, final revised Forest Plan, EIS, and Record of Decision. We will have informational meetings to explain the decisions on the final Forest Plan.

We will provide the public with general notice on opportunities to participate through mailings, news releases, public meetings, and website (www.fs.fed.us/r9/shawnee). In addition to formal opportunities for public comment, we will consider comments received at any time throughout the revision process.

The Shawnee National Forest will host five open house meetings to (1) answer specific questions relative to the NOI and (2) provide information on how to comment on the NOI and to accept written comments from the public. All information shared by the Forest Service will be identical at each meeting. Following is a schedule of the meetings.

April 2, 2002: 2:00–7:00 p.m	Eddyville Community Center, Eddyville, IL 62928.
April 3, 2002: 2:00–7:00 p.m	Ralph Metcalf Federal Building, 77 West Jackson Blvd., Chicago, IL 60404.
April 4, 2002: 2:00–7:00 p.m	Fisher's Hotel and Conference Center, 2100 West Main St., Belleville, IL 62226.
April 10, 2002: 2:00–7:00 p.m	Executive Inn Evansville, 600 Walnut St., Evansville, IN 47708.
April 11, 2002: 2:00–7:00 p.m	Travelodge & Convention Center, 2600 West DeYoung, Marion, IL 62959.

Availability of Public Comment

Comments received in response to this solicitation, including names and addresses of those who comment, will be considered part of the public record for this proposed action and will be available for public inspection. Comments submitted anonymously will be accepted and considered. However, those who submit anonymous comments will not have standing to appeal the subsequent decisions under 36 CFR parts 215 or 217.

Additionally, pursuant to 7 CFR 1.27(d), any person may request the agency to withhold a submission from the public record by showing how the Freedom of Information Act (FOIA) permits such confidentiality. Persons requesting such confidentiality should be aware that under FOIA, confidentiality may be granted in only very limited circumstances, such as to protect trade secrets.

The Forest Service will inform the requester of the agency's decision regarding the request for confidentiality and when the requester is denied, the agency will return the submission and notify the requester that the comments may be resubmitted with or without name and address within 90 days.

Release and Review of the DEIS

The DEIS is expected to be filed with the Environmental Protection Agency (EPA) and to be available for public comment in 2003. At that time, the EPA will publish a Notice of Availability in the **Federal Register.** The comment period on the DEIS will be 90 days from the date the EPA publishes the Notice of Availability in the **Federal Register.**

The Forest Service believes it is important to give reviewers notice of several court rulings related to public participation in the environmental review process. First, reviewers of DEIS's must structure their participation in the environmental review of the proposal so that it is meaningful and alerts an agency to reviewer's position and contentions [*Vermont Yankee Nuclear Poser Corp.* v. *NRDS, 435 U.S. 519, 553 (1978)*]. Also, environmental objections that could be raised at the DEIS stage but that are not raised until after completion of the final EIS may be waived or dismissed by the courts (City of Angoon v. Hodel, 803 F.2d 1016, 1022 (9th cir. 1986) and Wisconsin Heritages, Inc. v. Harris, 490 F. Supp. 1334, 1338 (E.D. Wis. 1980). Because of these court rulings it is very important that those interested in this proposed action participate by the close of the 90-day comment period so substantive comments and objections are made available to the Forest Service at a time when it can meaningfully consider them and respond to them in the final EIS.

To assist the Federal Service in identifying and considering issues and concerns on the proposed action, comments on the DEIS should be as specific as possible. It is also helpful if comments refer to specific pages or chapters of the DEIS. Comments may also address the adequacy of the DEIS or the merits of the alternatives formulated and discussed in the statement. Reviews may wish to refer to

the Council of Environmental Quality Regulations (*http://ceq.eh.doe.gov/nepa/nepanet.htm*) for implementing the procedural provision of he National Environmental Policy Act at 40 CFR 1503.3 in addressing these points.

Dated: March 12, 2002.

Donald L. Meyer,

Acting Regional Forester.

[FR Doc. 02–6678 Filed 3–19–02; 8:45 am]

BILLING CODE 3410–11–M

DEPARTMENT OF AGRICULTURE

Forest Service

West Bear Vegetation Management Project; Wasatch-Cache National Forest, Summit County, UT

AGENCY: Forest Service, USDA.

ACTION: Notice of intent to prepare environmental impact statement.

SUMMARY: The Forest Supervisor of the Wasatch-Cache National Forest gives notice of the agency's intent to prepare an environmental impact statement on a proposal to manage forest vegetation in the Bear River drainage. The headwaters of this drainage are located on the west end of the Evanston Ranger District and are located in Utah about 35 miles south of Evanston, Wyoming in the Uinta Mountain Range. The portion of this drainage this is National Forest land and is being considered for treatment contains approximately 13,000 acres, primarily in the West Fork of the Bear River drainage.

The proposed action was developed to address some of the opportunities identified in the West Fork Bear River Assessment. It includes silvicultural treatments to restore forest age class diversity, species composition, and forest stand structure. These proposed treatments included the use of prescribed fire as well as timber harvest. New roads would be constructed to provide access for timber harvest in portions of the area. The volume of timber and amount of new road construction will likely vary among alternatives. The proposal also includes reconstruction or relocation of some poorly located existing roads and improvement or rehabilitation of some existing dispersed recreation sites in the area.

The purpose of and need for this proposal includes the following:

1. To restore forest age class diversity, species composition, and forest stand structure that were likely to have occurred historically in this drainage. Fire suppression and past timber harvesting have resulted in prevalence of mature and old forest in portions of the area, forest succession from seral species to subalpine fir, and dense forest stand conditions not consistent with the historic range of conditions. These conditions have adverse effects on habitat for some wildlife species as well increasing the risk of forest insect epidemics. The project would restore balance to forest conditions reducing the effects of past human activities on some species of wildlife and maintain or rector properly functioning conditions to forest lands in the area.

2. To reduce adverse environmental effects of the existing road system. Many of the roads in this drainage constructed or developed prior to the 1970's are poorly located and designed. Portions need to be relocated or redesigned to reduce sediment delivery to stream channels.

3. To provide timber for harvest from suitable lands contributing opportunities for industry and communities in Utah and Wyoming that are dependent on national forest timber for a portion of their supply and economy.

4. To improve and maintain or/rehabilitate existing dispersed campsites. Some of the dispersed campsites that have developed over the years are on poor locations with poor access roads. There is a need to harden or redesign some sites and to close and rehabilitate other sites and decommission improperly located access roads to reduce damage to soils, vegetation, and streams.

The Forest Service invites comments and suggestions on the scope of the analysis to be included in the draft environmental impact statement (DEIS). In addition, the Forest Service gives notice that it is beginning a full environmental analysis and decision-making process for this proposal so that interested or affected people may know how they can participate in the environmental analysis and contribute to the final decision. The first public ''scoping'' open house is scheduled for March 28, 2002, in Evanston, Wyoming, at the Historic Railroad Depot on front Street in Evanston, Wyoming, from 4:00 to 7:00 P.M. The purpose of this open house is to learn what issues members of the public or interested agencies believe are involved in the proposal. Knowledge of the issues will help establish the scope of the Forest Service environmental analysis and define the kind and range of alternatives to be considered. Forest Service officials wild describe and explain the proposed actions and the process of environmental analysis and disclosure to be followed in evaluating this proposal. The Forest Service welcomes any public comments on the proposal.

DATES: Comments concerning the scope of the analysis should be received in writing by April 19, 2002.

ADDRESSES: Send written comments to Stephen Ryberg, District Ranger, Evanston, WY 82930.

FOR FURTHER INFORMATION CONTACT: Larry Johnson, Environmental Planner, (307) 789–3194, or Kent O'Dell, Timber Management Coordinator, (307) 782–6555.

SUPPLEMENTARY INFORMATION: The proposal to manage forest vegetation in the Bear River drainage includes timber harvesting, prescribed burning, construction and reconstruction of roads, and hardening, rehabilitating or relocating dispersed campsites and their access roads. There are a variety of forest cover types in this drainage, including spruce/fir, mixed conifer, lodgepole pine, mixed conifer and aspen, and pure aspen. Proposed silvicultural prescriptions include selective management in the spruce/fir and mixed conifer, thinning and small patch cuts in the lodgepole pine, and conifer removal combined with prescribed fire in the mixed conifer/aspen and pure aspen forest cover types.

Proposed new road construction would be limited to that needed for access for management activities. Most of these roads would be closed or decommissioned following management activities. Several of these roads may be opened for public use to replace existing roads that would be decommissioned. There is no proposed road construction in inventoried roadless areas.

Proposed reconstruction or relocation of existing roads would emphasize improving design of the roads near stream crossings and relocating or improving drainage where the roads are near stream channels.

Proposed hardening, redesign, or relocation of dispersed campsites and their access roads would be emphasized where these sites or their access roads are resulting in soil erosion, especially near water bodies.

The decision to be made is whether to implement the proposed activities listed above.

The Wasatch-Cache National Forest Land and Resource Management Plan provides standards and guides for forest and road management. This direction is located in Chapter IV under the Whitney Management Area and under Forest-wide Standards and Guides. The proposed action is consistent with the Forest Plan.

A U.S. Army Corps of Engineers ''404 Permit'' for dredging and filling waters

and/or wetlands will be required for any road work in stream channels or riparian areas. A determination of effects on Canada lynx will be required from the U.S. Fish and Wildlife Service. The Forest Service will request the U.S. Army Corps and U.S. Fish and Wildlife Service to cooperate in the environmental analysis, and may request cooperation from other State or Federal agencies.

The Deciding Official will be Tom Tidwell, Forest Supervisor, Wasatch-Cache National Forest, 8236 Federal Building, 125 South State Street, Salt Lake City, UT 84138.

A draft environmental impact statement is expected to be published in 2002, with public comment on the draft material requested for a period of 45 days, and completion of a final environmental impact statement later in 2002.

The 45 day public comment period on the draft environmental impact statement will commence on the day the Environmental Protection Agency publishes a ''Notice of Availability'' in the **Federal Register**.

The Forest Service believes it is important to give reviewers notice at this early stage of several court rulings related to public participation in the environmental review process. First, reviewers of draft environmental impact statements must structure their participation in the environmental review of the proposed so that it is meaningful and alerts an agency to the reviewer's position and contentions. *Vermont Yankee Nuclear Power Corp.* v. *NRDC, 435 U.S. 519, 553 (1978).* Also, environmental objections that could be raised at the draft environmental impact statement stage but that are not raised until after completion of the final environmental impact statement may be waived or dismissed by the courts. *City of Angoon* v. *Hodel*, 803 F.2d 1016, 1022 (9th Cir. 1986) and *Wisconsin Heritages, Inc.* v. *Harris*, 490 F. Supp. 1334, 1338 (E.D. Wis. 1980). Because of these court rulings, it is very important that those interested in this proposed action participate by the close of the 45-day comment period so that substantive comments and objections are made available to the Forest Service at a time when it can meaningfully consider them and respond to them in the final environmental impact statement.

To assist the Forest Service in identifying and considering issues and concerns on the proposed action, comments on the draft environmental impact statement should be as specific as possible. It is also helpful if comments refer to specific pages or chapters of the draft statement. Comments may also address the adequacy of the draft environmental impact statement or the merits of the alternatives formulated and discussed in the statement. (Reviewers may wish to refer to the Council on Environmental Quality Regulations for implementing the procedural provisions of the National Environmental Policy Act at 40 CFR 1503.3 in addressing these points.) Please note that comments you make on the draft environmental impact statement will be regarded as public information.

Dated: March 14, 2002.

Tom Tidwell,

Forest Supervisor.

[FR Doc. 02–6677 Filed 3–19–02; 8:45 am]

BILLING CODE 34210–11–M

DEPARTMENT OF AGRICULTURE

Opal Creek Scenic Recreation Area (SRA) Advisory Council; Meeting

AGENCY: Forest Service, USDA.

ACTION: Notice of meeting.

SUMMARY: An Opal Creek Scenic Recreation Area Advisory Council meeting will convene in Stayton, Oregon on Monday, April 1, 2002. The meeting is scheduled to begin at 6 p.m., and will conclude at approximately 8:30 p.m. The meeting will be held in the South Room of the Stayton Community Center located on 400 West Virginia Street in Stayton, Oregon.

The Opal Creek Wilderness and Opal Creek Scenic Recreation Area Act of 1996 (Opal Creek Act) (Pub. L. 104–208) directed the Secretary of Agriculture to establish the Opal Creek Scenic Recreation Area Advisory Council. The Advisory Council is comprised of thirteen members representing state, county and city governments, and representatives of various organizations, which include mining industry, environmental organizations, inholders in Opal Creek Scenic Recreation Area, economic development, Indian tribes, adjacent landowners and recreation interests. The council provides advice to the Secretary of Agriculture on preparation of a comprehensive Opal Creek Management Plan for the SRA, and consults on a periodic and regular basis on the management of the area. Tentative agenda items include the following topics:

Discussion of the decision for the Opal Creek SRA Environmental Analysis;

Transition of the Council membership in accordance with provisions of the Council Charter;

Creating a to-do list of future topics the Council will deal with;

A direct public comment period is tentatively scheduled to begin at 8 p.m. Time allotted for individual presentations will be limited to 3 minutes. Written comments are encouraged, particularly if the material cannot be presented within the time limits of the comment period. Written comments may be submitted prior to the April 1 meeting by sending them to Designated Federal Official Stephanie Phillips at the address given below.

FOR FURTHER INFORMATION CONTACT: For more information regarding this meeting, contact Designated Federal Official Stephanie Phillips; Willamette National Forest, Detroit Ranger District, HC 73 Box 320, Mill City, OR 97360; (503) 854–3366.

Dated: March 14, 2002.

Y. Robert Iwamoto,

Acting Forest Supervisor.

[FR Doc. 02–6673 Filed 3–19–02; 8:45 am]

BILLING CODE 3410–11–M

DEPARTMENT OF AGRICULTURE

Forest Service

Oregon Coast Provincial Advisory Committee Meeting

AGENCY: Forest Service, USDA.

ACTION: Notice of meeting.

SUMMARY: The Oregon Coast provincial Advisory Committee (PAC) will meet on April 11, 2002. The meeting will begin at 9 a.m., in the Cape Perpetua Visitor's Center, 2400 Highway 101, Yachats, Oregon. Agenda items, with a theme of ''aquatic issues,'' will include: FS/BLM process to establish priority watersheds; locations of priority watersheds; restoration results on the BLM Nestucca and FS Knowles Creek projects; pre-commercial thinning obstacles; barriers to upland restoration; local jobs created through thinning; and round robin information sharing. A fifteen-minute public comment period is scheduled at approximately 1:45 p.m. The committee welcomes the publics' written comments on committee business at any time. The meeting should end around 3 p.m. Interested citizens are encouraged to attend. Lunch will be provided.

FOR FURTHER INFORMATION CONTACT: Joni Quarnstrom, Public Affairs Specialist, Siuslaw National Forest, 541/750–7075 or write to Forest Supervisor, Siuslaw National Forest, P.O. Box 1148, Corvallis, OR 97339.

Dated: March 14, 2002.

Gloria D. Brown,

Forest Supervisor.

[FR Doc. 02–6676 Filed 3–19–02; 8:45 am]

BILLING CODE 3410–11–M

DEPARTMENT OF AGRICULTURE

Forest Service

Southwest Washington Provincial Advisory Committee Meeting Notice

AGENCY: Forest Service, USDA.

ACTION: Notice of meeting.

SUMMARY: The Southwest Washington Provincial Advisory Committee will meet on Wednesday, March 27, at the Gifford Pinchot National Forest Headquarters, located at 10600 NE 51st Circle, Vancouver, Washington. The meeting will begin at 9 a.m. and continue until 4 p.m. The purpose of the meeting is to learn about: (1) The possibilities of meth labs in the forest, (2) how special interest groups interpret mature and old growth protection and forest restoration, (3) an overview of the strategy for protection of the Columbia River and basin-wide habitat recovery, (4) the water quality restoration plan for the Wind and Upper Cispus Rivers, and (5) provide for a Public Open Forum. All Southwest Washington Provincial Advisory Committee meetings are open to the public. Interested citizens are encouraged to attend. The ''open forum'' provides opportunity for the public to bring issues, concerns, and discussion topics to the Advisory Committee. The ''open forum'' is scheduled as part of agenda item (3) for this meeting. Interested speakers will need to register prior to the open forum period. The committee welcomes the public's written comments on committee business at any time.

FOR FURTHER INFORMATION CONTACT: Direct questions regarding this meeting to Linda Turner, Public Affairs Specialist, at (360) 891–5195, or write Forest Headquarters Office, Gifford Pinchot National Forest, 10600 NE 51st Circle, Vancouver, WA 98682.

Dated: March 14, 2002.

Claire Lavendel,

Forest Supervisor.

[FR Doc. 02–6675 Filed 3–19–02; 8:45 am]

BILLING CODE 3410–11–M

DEPARTMENT OF COMMERCE

International Trade Administration

[A–201–805]

Circular Welded Non-Alloy Steel Pipe from Mexico: Rescission of Antidumping Duty Administrative Review

AGENCY: Import Administration, International Trade Administration, Department of Commerce.

ACTION: Notice of Rescission of Antidumping Duty Administrative Review.

SUMMARY: On December 19, 2001, in response to a request made by Hysla, S.A. de C.V. (''Hylsa''), the Department of Commerce (''the Department'') published in the Federal Register (66 FR 65470) a notice announcing the initiation of an administrative review of the antidumping duty order on circular welded non–alloy steel pipe from Mexico. The review period is November 1, 2000 to October 31, 2001. This review has now been rescinded because Hylsa has withdrawn its request for review.

EFFECTIVE DATE: March 20, 2002.

FOR FURTHER INFORMATION CONTACT: John Drury, Enforcement Group III, Office 8, Import Administration, International Trade Administration, U.S. Department of Commerce, 14th Street and Constitution Avenue, N.W., Room 7866, Washington, D.C. 20230; telephone (202) 482–0195.

SUPPLEMENTARY INFORMATION:

The Applicable Statute

Unless otherwise indicated, all citations to the Tariff Act of 1930, as amended (the Act) are references to the provisions effective January 1, 1995, the effective date of the amendments made to the Act by the Uruguay Round Agreements Act (URAA). In addition, unless otherwise indicated, all citations to the Department's regulations are references to the provisions codified at 19 CFR Part 351 (2001).

Scope of the Review

The products covered by these orders are circular welded non–alloy steel pipes and tubes, of circular cross–section, not more than 406.4 millimeters (16 inches) in outside diameter, regardless of wall thickness, surface finish (black, galvanized, or painted), or end finish (plain end, beveled end, threaded, or threaded and coupled). These pipes and tubes are generally known as standard pipes and tubes and are intended for the low pressure conveyance of water, steam, natural gas, and other liquids and gases in plumbing and heating systems, air conditioning units, automatic sprinkler systems, and other related uses, and generally meet ASTM A–53 specifications. Standard pipe may also be used for light load–bearing applications, such as for fence tubing, and as structural pipe tubing used for framing and support members for reconstruction or load–bearing purposes in the construction, shipbuilding, trucking, farm equipment, and related industries. Unfinished conduit pipe is also included in these orders. All carbon steel pipes and tubes within the physical description outlined above are included within the scope of these orders, except line pipe, oil country tubular goods, boiler tubing, mechanical tubing, pipe and tube hollows for redraws, finished scaffolding, and finished conduit. Standard pipe that is dual or triple certified/stenciled that enters the United States as line pipe of a kind used for oil or gas pipelines is also not included in these orders.

Imports of the products covered by this order are currently classifiable under the following Harmonized Tariff Schedule (HTS) subheadings: 7306.30.10.00, 7306.30.50.25, 7306.30.50.32, 7306.30.50.40, 7306.30.50.55, 7306.30.50.85, and 7306.30.50.90. Although the HTS subheadings are provided for convenience and customs purposes, our written description of the scope of these proceedings is dispositive.

Background

On November 30, 2001, Hylsa (a producer and exporter of subject merchandise) requested an administrative review of the antidumping duty order on circular welded non–alloy steel pipe from Mexico published in the Federal Register on November 2, 1992 (57 FR 49453). On December 17, 2001, hylsa withdrew its request for review. On December 19, 2001, the Department published in the Federal Register (66 FR 65470) a notice of ''Initiation of Antidumping and Countervailing Duty Administrative Reviews'' initiating the administrative review. The applicable regulation, 19 CFR 351.213(d)(1), states that if a party that requested an administrative review withdraws the request within 90 days of the publication of the notice of initiation of the requested review, the Secretary will rescind the review. Given that Hylsa was the only party to request the administrative review, and the withdrawal request is timely, we find it reasonable to accept the withdrawal request. Therefore, we are rescinding

this review of the antidumping duty order on circular welded non–alloy steel pipe from Mexico covering the period November 1, 2000 through October 31, 2001.

This notice is issued and published in accordance with section 777(i) of the Act and 19 CFR 351.213(d)(4).

Dated: March 5, 2002.

Joseph A. Spetrini,

Deputy Assistant Secretary for Import Administration, Group III.

[FR Doc. 02–6741 Filed 3–19–02; 8:45 am]

BILLING CODE 3510–DS–S

DEPARTMENT OF COMMERCE

International Trade Administration

[A–570–875]

Notice of Initiation of Antidumping Duty Investigation: Non–Malleable Cast Iron Pipe Fittings from the People's Republic of China

AGENCY: Import Administration, International Trade Administration, Department of Commerce.

ACTION: Initiation of Antidumping Duty Investigation.

EFFECTIVE DATE: March 20, 2002.

FOR FURTHER INFORMATION CONTACT: Ron Trentham or Paige Rivas at (202) 482–6320 and (202) 482–0651, respectively; Import Administration, International Trade Administration, U.S. Department of Commerce, 14th Street and Constitution Avenue, NW, Washington, DC 20230.

Initiation of Investigation

The Applicable Statute and Regulations

Unless otherwise indicated, all citations to the statute are references to the provisions effective January 1, 1995, the effective date of the amendments made to the Tariff Act of 1930, as amended (the Act), by the Uruguay Round Agreements Act (URAA). In addition, unless otherwise indicated, all citations to the Department of Commerce's (the Department's) regulations are references to the provisions codified at 19 CFR Part 351 (2001).

The Petition

On February 21, 2002, the Department received a petition filed in proper form by Anvil International, Inc., and Ward Manufacturing Inc. (collectively, the petitioners). The Department received information supplementing the petition on March 5, 2002 and March 11, 2002.

In accordance with section 732(b) of the Act, the petitioners allege that imports of non–malleable cast iron pipe fittings and ductile cast iron pipe fittings that have the same physical characteristics as non–malleable cast iron pipe fittings (pipe fittings) from the People's Republic of China (PRC) are being, or are likely to be, sold in the United States at less than fair value within the meaning of section 731 of the Act, and that such imports are materially injuring, or are threatening to materially injure, an industry in the United States.

The Department finds that the petitioners filed this petition on behalf of the domestic industry because they are interested parties as defined in sections 771(9)(C) of the Act and have demonstrated sufficient industry support with respect to the antidumping investigation that they are requesting the Department to initiate (*see* the *Determination of Industry Support for the Petition* section below).

Scope of Investigation

For purposes of this investigation, the products covered are finished and unfinished non–malleable cast iron pipe fittings with an inside diameter ranging from 1/4 inch to 6 inches, whether threaded or un–threaded, regardless of industry or proprietary specifications. The subject fittings include elbows, ells, tees, crosses, and reducers as well as flanged fittings. These pipe fittings are also known as cast iron pipe fittings or gray iron pipe fittings. These cast iron pipe fittings are normally produced to ASTM A–126 and ASME B.l6.4 specifications and are threaded to ASME B1.20.1 specifications. Most building codes require that these products are Underwriters Laboratories (UL) certified. The scope does not include cast iron soil pipe fittings or grooved fittings or grooved couplings.

Fittings that are made out of ductile iron that have the same physical characteristics as the gray or cast iron fittings subject to the scope above or which have the same physical characteristics and are produced to ASME B.16.3, ASME B.16.4, or ASTM A–395 specifications, threaded to ASME B1.20.1 specifications and UL certified, regardless of metallurgical differences between gray and ductile iron, are also included in the scope of this petition. These ductile fittings do not include grooved fittings or grooved couplings. Ductile cast iron fittings with mechanical joint ends (MJ), or Push On ends (PO), or flanged ends and produced to the American Water Works Association (AWWA) specifications–AWWA C110 or AWWA C153 are not included.

Imports of covered merchandise are classifiable in the Harmonized Tariff Schedule of the United States (HTSUS) under item numbers 7307.11.00.30, 7307.11.00.60, 7307.19.30.60 and 7307.19.30.85. HTSUS subheadings are provided for convenience and Customs purposes. The written description of the scope of this proceeding is dispositive.

During our review of the petition, we discussed the scope with the petitioners to ensure that it accurately reflects the product for which the domestic industry is seeking relief. Moreover, as discussed in the preamble to the Department's regulations, we are setting aside a period for parties to raise issues regarding product coverage. *See*, *Antidumping Duties; Countervailing Duties; Final Rule*, 62 FR 27295, 27323 (May 19, 1997). The Department encourages all parties to submit such comments within 20 days from the publication of this notice. Comments should be addressed to Import Administration's Central Records Unit at Room 1870, U.S. Department of Commerce, 14th Street and Constitution Avenue, N.W., Washington, D.C. 20230. The scope comment period is intended to provide the Department with ample opportunity to consider all comments and consult with parties prior to the issuance of the preliminary determination.

Determination of Industry Support for the Petition

Section 771(4)(A) of the Act defines the ''industry'' as the producers of a domestic like product. Thus, to determine whether the petition has the requisite industry support, the statute directs the Department to look to producers and workers who produce the domestic like product. The United States International Trade Commission (ITC), which is responsible for determining whether ''the domestic industry'' has been injured, must also determine what constitutes a domestic like product in order to define the industry. While both the Department and the ITC must apply the same statutory definition regarding domestic like product (see section 771(10) of the Act), they do so for different purposes and pursuant to their separate and distinct authority. In addition, the Department's determination is subject to limitations of time and information. Although this may result in different definitions of the like product, such differences do not render the decision of either agency contrary to the law.[1]

[1] See Algoma Steel Corp. Ltd., v. United States, 688 F. Supp. 639, 642–44 (CIT 1988); High Information Content Flat Panel Displays and

Section 771(10) of the Act defines the domestic like product as ''a product which is like, or in the absence of like, most similar in characteristics and uses with, the article subject to an investigation under this title.'' Thus, the reference point from which the domestic like product analysis begins is ''the article subject to an investigation,'' *i.e.*, the class or kind of merchandise to be investigated, which normally will be the scope as defined in the petition.

In this petition, the petitioners do not offer a definition of domestic like product distinct from the scope of these investigations. Thus, based on our analysis of the information presented to the Department by the petitioners, and the information obtained and received independently by the Department, we have determined that there is a single domestic like product, which is defined in the *Scope of Investigation* section above, and have analyzed industry support in terms of this domestic like product.

Section 732(b)(1) of the Act requires that a petition be filed on behalf of the domestic industry. Section 732(c)(4)(A) of the Act provides that a petition meets this requirement if the domestic producers or workers who support the petition account for: (1) at least 25 percent of the total production of the domestic like product; and (2) more than 50 percent of the production of the domestic like product produced by that portion of the industry expressing support for, or opposition to, the petition. Information contained in the petition demonstrates that the domestic producers or workers who support the petition account for over 50 percent of total production of the domestic like product. *See*, *Petition for Imposition of Antidumping Duties: Non–Malleable Cast Iron Pipe Fittings from the People's Republic of China (Pipe Fittings Petition*), dated February 21, 2002, at page 3. Therefore, the domestic producers or workers who support the petitions account for at least 25 percent of the total production of the domestic like product, and the requirements of section 732(c)(4)(A)(i) are met. *See*, *Import Administration AD Investigation Checklist*, dated March 13, 2002 (*Initiation Checklist*) (public version on file in the Central Records Unit of the Department of Commerce, Room B–099). Furthermore, because the Department received no opposition to the petition, the domestic producers or workers who support the petition account for more than 50 percent of the production of the domestic like product produced by that portion of the industry expressing support for or opposition to the petition. *See*, *Initiation Checklist*. Thus, the requirements of section 732(c)(4)(A)(ii) are met.

Accordingly, the Department determines that the petition was filed on behalf of the domestic industry within the meaning of section 732(b)(1) of the Act. *See*, *Initiation Checklist*.

Export Price and Normal Value

The following is a description of the allegation of sales at less than fair value upon which the Department has based its decision to initiate this investigation. The sources of data for the deductions and adjustments relating to U.S. price and factors of production (FOP) are detailed in the *Initiation Checklist*.

The anticipated period of investigation (POI) for the PRC, a non–market economy (NME) country, is July 1, 2001 through December 31, 2001. Regarding an investigation involving an NME country, the Department presumes, based on the extent of central government control in an NME, that a single dumping margin, should there be one, is appropriate for all NME exporters in the given country. *See*, *e.g.*, *Final Determination of Sales at Less Than Fair Value: Silicon Carbide from the PRC*, 59 FR 22585 (May 2, 1994). In the course of the investigation of pipe fittings from the PRC, all parties will have the opportunity to provide relevant information related to the issue of the PRC's status and the granting of separate rates to individual exporters.

Export Price

The petitioners identified the following three companies as producers and/or exporters of pipe fittings from the PRC: Eathu Casting & Forging Co., Ltd., GMS Pipe Fittings Industries, and ShenYang Metalcast Co., Ltd. To calculate export price (EP), the petitioners provided the average unit value (AUV) calculated from import statistics released by the Census Bureau. The petitioners calculated the AUV using the quantity and value of imports during the POI of pipe–fittings from the PRC, entered under HTSUS subheadings 7307.11.00.30 and 7307.11.00.60, the two HTSUS numbers covering non–malleable cast iron pipe fittings.

The petitioners calculated a net U.S. price by deducting from the AUV foreign inland freight. *See Initiation Checklist*.

Normal Value

The petitioners assert that the PRC is an NME country and no determination to the contrary has yet been made by the Department. In previous investigations, the Department has determined that the PRC is an NME. *See*, *Steel Concrete Reinforcing Bars from the People's Republic of China; Notice of Final Determination of Sales at Less Than Fair Value (Re–Bars from China*), 66 FR 33522 (June 22, 2001), and *Notice of Final Determination of Sales at Less Than Fair Value: Foundry Coke Products from the People's Republic of China (Foundry Coke from China*), 66 FR 39487 (July 31, 2001). In accordance with section 771(18)(C)(i) of the Act, the presumption of NME status remains in effect until revoked by the Department. The presumption of NME status for the PRC has not been revoked by the Department and, therefore, remains in effect for purposes of the initiation of this investigation. Because the PRC's status as an NME remains in effect, the petitioners determined the dumping margin using an FOP analysis.

For normal value (NV), the petitioners based the FOP, as defined by section 773(c)(3) of the Act, on the consumption rates of one U.S. pipe fittings producer for non–malleable cast iron pipe fittings. The petitioners assert that information regarding the Chinese producers' consumption rates is not available, and have therefore assumed, for purposes of the petition, that producers in the PRC use the same inputs in the same quantities as the petitioners use, except where a variance from the petitioners' cost model can be justified on the basis of available information. Based on the information provided by the petitioners, we believe that the petitioners' FOP methodology represents information reasonably available to the petitioners and is appropriate for purposes of initiating this investigation.

Pursuant to section 773(c) of the Act, the petitioners assert that India is the most appropriate surrogate country for the PRC, claiming that India is: (1) a market economy; (2) a significant producer of comparable merchandise; and (3) at a level of economic development comparable to the PRC in terms of per capita gross national product (GNP). Based on the information provided by the petitioners, we believe that the petitioners' use of India as a surrogate country is appropriate for purposes of initiating this investigation.

In accordance with section 773(c)(4) of the Act, the petitioners valued FOP, where possible, on reasonably available, public surrogate data from India. Raw materials were valued based on Indian import values, as published by *Monthly Statistics of the Foreign Trade of India* (*Indian Import Statistics*) for February

Display Glass Therefore from Japan: Final Determination; Rescission of Investigation and Partial Dismissal of Petition, 56 FR 32376, 32380–81 (July 16, 1991).

2001. Because these values are from a period preceding the POI, the petitioners inflated the value to December 2001 levels where appropriate, using the Indian Wholesale Prices Index (as published in the *International Financial Statistics* of the International Monetary Fund).

Labor was valued using the Department's regression–based wage rate for the PRC, in accordance with past Department practice. *See*, *Pipe Fittings Petition* at 14 and citations discussed therein. Electricity was valued using the 1997 Indian electricity prices for industry as published in the fourth quarter 2001 issue of *Energy Prices and Taxes*, published by the Organization for Economic Cooperation and Development's International Energy Agency. To inflate the price to December 2001 levels, the petitioners multiplied the computed amount by an inflation factor. *See*, *Pipe Fittings Petition* at 15 and 16.

Foundry coke was valued using Indian Import Statistics for February 2001. To inflate the price to December 2001 levels, the petitioners multiplied the computed amount by an inflation factor, and adjusted for price differences between U.S. foundry coke and blast furnace coke prices in the first quarter of 2001. *See*, *Pipe Fittings Petition* at 14 and 15.

We find the petitioners' calculation of foundry coke to be inappropriate because there is no evidence based on the actual Indian data that: (1) the data included the import value for both blast furnace coke and foundry coke, as claimed in the petition, and (2) the majority of Indian imports was of blast furnace coke. Accordingly, we have recalculated the surrogate value for foundry coke based on the figures in the *Indian Import Statistics* without any further adjustments.

The petitioners derived the surrogate value for natural gas from a price the Department utilized in the *Notice of Preliminary Determination of Sales at Less Than Fair Value: Certain Hot–Rolled Carbon Steel Flat Products From the People's Republic of China*, 66 FR 22183 (May 3, 2001). To convert to the unit of measurement used in the production factors of the U.S. surrogate, the petitioners multiplied the amount by 1,000. To inflate the price to December 2001 levels, the petitioners multiplied the computed amount by a U.S. inflation factor because it was denominated in U.S. dollars. *See*, *Pipe Fittings Petition* at 16. For overhead, depreciation, selling general and administrative (SG&A) expenses, the petitioners applied rates derived from the fiscal year financial statements as of December 31, 2000, of an Indian pipe fittings producer that the petitioners believe to produce iron and steel castings, including cast iron pipes and fittings. The Indian pipe fittings producer did not make any profits in both 2000 and 2001; therefore, the petitioners calculated the profit ratio using the financial statements of another Indian steel producer using the financial statements of that company as of March 31, 2001. *See*, *Pipe Fittings Petition* at 17. Based on the information provided by the petitioners, we believe that the surrogate values represent information reasonably available to the petitioners and are acceptable for purposes of initiating this investigation.

The petitioners did not include packing materials in its computation because it was unable to obtain information on this expense. The petitioners valued packing labor using the direct labor rate published on the Department's website. *See*, *Pipe Fittings Petition* at 17.

Based upon the comparison of EP to NV, the estimated dumping margin is 38.25 percent.

Fair Value Comparisons

Based on the data provided by the petitioners, there is reason to believe that imports of pipe fittings from the PRC are being, or are likely to be, sold at less than fair value.

Allegations and Evidence of Material Injury and Causation

The petitioners allege that the U.S. industry producing the domestic like product is being materially injured, or is threatened with material injury, by reason of imports of the subject merchandise sold at less than NV. The volume of imports from the PRC, using the latest available data, exceeded the statutory threshold of seven percent for a negligibility exclusion. See, section 771(24)(A)(ii) of the Act. The petitioners contend that the industry's injured condition is evidenced in the declining trends in operating income, decreased U.S. market share, and increasing Chinese imports. The allegations of injury and causation are supported by relevant evidence including U.S. Customs import data, domestic consumption, and domestic production information. We have assessed the allegations and supporting evidence regarding material injury and causation, and have determined that these allegations are properly supported by accurate and adequate evidence and meet the statutory requirements for initiation. *See*, *Initiation Checklist*.

Initiation of the Antidumping Investigation

Based on our examination of the petition on pipe fittings, and the petitioners' response to our supplemental questionnaire clarifying the petition, and additional independent data, we find that the petition meets the requirements of section 732 of the Act. *See*, *Initiation Checklist*. Therefore, we are initiating the antidumping duty investigation to determine whether imports of pipe fittings from the PRC are being, or are likely to be, sold in the United States at less than fair value. Unless this deadline is extended, we will make our preliminary determination no later than 140 days after the date of this initiation.

Distribution of Copies of the Petition

In accordance with section 732(b)(3)(A) of the Act, a copy of the public version of the petition has been provided to the representatives of the government of the PRC. We will attempt to provide a copy of the public version of the petition to each exporter named in the petition, as appropriate.

International Trade Commission Notification

We have notified the ITC of our initiation, as required by section 732(d) of the Act.

Preliminary Determination by the ITC

The ITC will determine, no later than April 8, 2002 whether there is a reasonable indication that imports of pipe fittings from the PRC are causing material injury, or threatening to cause material injury, to a U.S. industry. A negative ITC determination will result in the investigation being terminated; otherwise, this investigation will proceed according to statutory and regulatory time limits.

This notice is issued and published pursuant to section 777(i) of the Act.

Dated: March 13, 2002.

Richard W. Moreland,

Acting Assistant Secretary for Import Administration.

[FR Doc. 02–6739 Filed 3–19–02; 8:45 am]

BILLING CODE 3510–DS–S

DEPARTMENT OF COMMERCE

International Trade Administration

[A–570–847]

Persulfates From the People's Republic of China: Extension of Time Limit for Preliminary Results in Antidumping Duty Administrative Review

AGENCY: Import Administration, International Trade Administration, Department of Commerce.

ACTION: Extension of Time Limit for Preliminary Results of Antidumping Duty Administrative Review.

EFFECTIVE DATE: March 20, 2002.

FOR FURTHER INFORMATION CONTACT: Michael Strollo at (202) 482–0629, Office of AD/CVD Enforcement, Import Administration, International Trade Administration, U.S. Department of Commerce, 14th Street and Constitution Avenue, NW., Washington DC 20230.

SUPPLEMENTARY INFORMATION:

Applicable Statute and Regulations

Unless otherwise indicated, all citations to the Tariff Act of 1930, as amended (the Act), are references to the provisions effective January 1, 1995, the effective date of the amendments made to the Act by the Uruguay Round Agreements Act. In addition, unless otherwise indicated, all citations to the Department of Commerce's (the Department's) regulations are to 19 CFR part 351 (2001).

Background

On August 20, 2001, the Department published a notice of initiation of administrative review of the antidumping duty order on persulfates from the People's Republic of China. The period of review is July 1, 2000 through June 30, 2001. The review covers one exporter of the subject merchandise to the United States.

Pursuant to section 751(a)(3)(A) of the Act, the Department shall make a preliminary determination in an administrative review of an antidumping duty order within 245 days after the last day of the anniversary month of the date of publication of the order. The Act further provides, however, that the Department may extend the 245-day period to 365 days if it determines it is not practicable to complete the review within the foregoing time period. Due to the complexity of selecting surrogate values to value factors of production, the large numbers of the surrogate values, and the fact that the Department shall conduct verification in this proceeding, it is not practicable to complete this review within the time limit mandated by section 751(a)(3)(A) of the Act. Therefore, in accordance with section 751 (a)(3)(A) of the Act, we have fully extended the deadline until July 31, 2002.

Dated: March 13, 2002.

Richard W. Moreland,

Deputy Assistant Secretary for Import Administration.

[FR Doc. 02–6740 Filed 3–19–02; 8:45 am]

BILLING CODE 3510–DS–P

DEPARTMENT OF COMMERCE

International Trade Administration

Industry Sector and Functional Advisory Committees for Trade Policy Matters (ISACs and IFACs); Request for Nominations

AGENCY: International Trade Administration, Trade Development.

ACTION: Notice of charter renewal and opportunity to nominate candidates for vacancies on the ISACs and IFACs.

SUMMARY: On March 18, 2002, the Secretary of Commerce and the United States Trade Representative (USTR) renewed the charters of the 17 Industry Sector and four Industry Functional Advisory Committees on Trade Policy Matters for a two-year term to expire March 18, 2004. The Industry Sector and Functional Advisory Committees (ISACs and IFACs) advise the United States Trade Representative and the Secretary of Commerce on trade matters. There are currently opportunities for membership on each of these Committees, including opportunities to serve as environmental representative on three of the Committees: ISAC 3 (Chemicals and Allied Products), ISAC 10 (Lumber and Wood Products), and ISAC 12 (Paper and Paper Products). Nominations will be accepted for current vacancies and those that occur throughout the remainder of the charter term, which expires on March 18, 2004. In order to be considered for appointment to the ISACs and IFACs, a nominee must be a U.S. citizen who is not a full-time employee of a governmental entity, is not registered with the Department of Justice under the Foreign Agents Registration Act, and represents a U.S. entity that trades internationally or an association of such entities (an environmental nominee must represent a U.S. entity with an interest in environmental issues relevant to the work of these Committees). Priority will be given to manufacturing establishments and firms that are outside of the Washington, DC area. U.S.-based subsidiaries of foreign companies, non-government organizations (except environmental organizations applying to ISAC 3, ISAC 10, and ISAC 12), and academic institutions do not qualify for representation on a Committee.

Recruitment: Vacancies may occur throughout the charter period and new appointments are made on a rolling basis. Recruitment information is available on the International Trade Administration website at: *www.ita.doc.gov/icp*. Further inquiries may be directed to Ingrid V. Mitchem, Director, Industries Consultations Program, U.S. Department of Commerce, 14th and Constitution Avenue, NW., Room 2015–B, Washington, DC 20230.

SUPPLEMENTARY INFORMATION: Pursuant to the Federal Advisory Committee Act (5 U.S.C. appendix 2), the Secretary of Commerce (the Secretary) and the United States Trade Representative (USTR) have renewed the charters of seventeen ISACs and four IFACs. The Secretary and USTR welcome nominations for the Industry Sector Advisory Committees for Trade Policy Matters (ISACs) and the Industry Functional Advisory Committees for Trade Policy Matters (IFACs) listed below:

- Industry Sector Advisory Committees for Trade Policy Matters (ISAC) on:

Aerospace Equipment (ISAC 1);
Capital Goods (ISAC 2);
Chemicals and Allied Products (ISAC 3);
Consumer Goods (ISAC 4);
Electronics and Instrumentation (ISAC 5);
Energy (ISAC 6);
Ferrous Ores and Metals (ISAC 7);
Footwear, Leather, and Leather Products (ISAC 8);
Building Products and Other Materials (ISAC 9);
Lumber and Wood Products (ISAC 10);
Nonferrous Ores and Metals (ISAC 11);
Paper and Paper Products (ISAC 12);
Services (ISAC 13);
Small and Minority Business (ISAC 14);
Textiles and Apparel (ISAC 15);
Transportation, Construction, Mining, Agricultural Equipment (ISAC 16);
Wholesaling and Retailing (ISAC 17); and

- Industry Functional Advisory Committees on Trade Policy Matters on:

Customs (IFAC 1);
Standards (IFAC 2);
Intellectual Property Rights (IFAC 3); and
Electronic Commerce (IFAC 4).

Background

In section 135 of the Trade Act of 1974 (1974 Trade Act, 19 U.S.C. 2155), as amended, Congress established a private-sector advisory system to ensure that U.S. trade policy and trade negotiation objectives adequately reflect U.S. commercial and economic interests. Section 135(a)(1) directs the President to

> Seek information and advice from representative elements of the private sector and the non-federal governmental sector with respect to—
>
> (A) Negotiating objectives and bargaining positions before entering into a trade agreement under [title I of the Trade Act of 1974 and section 1102 of the Omnibus Trade and Competitiveness Act of 1988];
>
> (B) The operation of any trade agreement once entered into, including preparation for dispute settlement panel proceedings to which the United States is a party; and
>
> (C) Other matters arising in connection with the development, implementation, and administration of the trade policy of the United States * * *

Section 135(c)(2) of the 1974 Trade Act provides that—

> (2) The President shall establish such sectoral or functional advisory committees as may be appropriate. Such committees shall, insofar as is practicable, be representative of all industry, labor, agricultural, or service interests (including small business interests) in the sector or functional areas concerned. In organizing such committees, the United States Trade Representative and the Secretaries of Commerce, Labor, Agriculture, the Treasury, or other executive departments, as appropriate, shall—
>
> (A) Consult with interested private organizations; and
>
> (B) Take into account such factors as—
>
> (i) patterns of actual and potential competition between United States industry and agriculture and foreign enterprise in international trade,
>
> (ii) the character of the non-tariff barriers and other distortions affecting such competition,
>
> (iii) the necessity for reasonable limits on the number of such advisory committees,
>
> (iv) the necessity that each committee be reasonably limited in size, and
>
> (v) in the case of each sectoral committee, that the product lines covered by each committee be reasonably related.

Pursuant to this provision, Commerce and USTR have established and co-chair seventeen Industry Sector Advisory Committees (ISACs) and four Industry Functional Advisory Committees (IFACs). The Committees' efforts have resulted in strengthening U.S. negotiating positions by enabling the United States to display a united front when it negotiates trade agreements with other nations. Committees meet an average of four times a year in Washington, DC. Members serve without compensation and are responsible for all expenses incurred in attending Committee meetings.

The Secretary of Commerce and the USTR co-chair the seventeen ISACs and IFACs.

Functions

The duties of the ISACs and IFACs are to provide the President with advice on objectives and bargaining positions for multilateral trade negotiations, bilateral trade negotiations, and other trade-related matters. The Committees provide bipartisan, industry input in the development of trade policy objectives. The Committees' efforts result in strengthening the U.S. negotiating position by enabling the United States to display a united front when it negotiates trade agreements with other nations.

The ISACs provide advice and information on issues that affect specific sectors of U.S. industry. The ISACs address market-access problems; barriers to trade; tariff levels; discriminatory foreign procurement practices; information, marketing, and advocacy needs of their sector; and other important trade issues.

The IFACs focus on cross-cutting issues that affect all industry sectors, such as customs matters, product standards, and intellectual property rights. Other functional issues, such as government procurement and subsidies, are handled in ad hoc meetings. Each ISAC may also select a member to serve on each IFAC so that a broad range of industry perspectives is represented.

Committees meet an average of four times a year, in Washington, DC. Members are responsible for all travel expenses incurred to attend the meetings.

Membership

ISAC and IFAC members are appointed jointly by the Secretary of Commerce and the USTR. Appointments are made at the rechartering of each Committee and periodically throughout the two-year charter period. Members serve at the discretion of the Secretary and USTR. Appointments to an ISAC or IFAC expire at the end of the Committee's charter. However, members may be re-appointed, should the Committee's charter be renewed, if the member proves to work effectively with the committee and his/her participation is still needed.

Each Committee is made up of approximately 30–50 members, based on the charter of each Committee. Each Committee elects a chairperson from the membership of the Committee.

Eligibility

Eligibility for membership on any Committee is limited to U.S. citizens who are not full-time employees of a governmental entity, are not registered with the Department of Justice under the Foreign Agents Registration Act, and represent a U.S. entity that (a) is directly engaged in the import or export of goods or that sells its services abroad, (b) is an association of such entities, or (c) with respect to environmental representatives serving on ISACs 3, 10 or 12, has an interest in environmental issues relevant to the work of the Committee. For purposes of the preceding sentence, a ''U. S. entity'' is an organization incorporated in the United States (or if unincorporated, having its headquarters in the United States:

(1) That is controlled by U.S. citizens or by another U.S. entity. An entity is not a U.S. entity if more than 50 percent of its Board of Directors or membership is made up of non-U.S. citizens. If the nominee is to represent an organization more than 10 percent of whose Board of Directors or membership is made up of non-U.S. citizens, or non-U.S. entities, the nominee must demonstrate at the time of nomination that this non-U.S. interest does not constitute control and will not adversely affect his or her ability to serve as a trade advisor to the United States; and

(2) At least 50 percent of whose annual revenue is attributable to non-governmental, U.S. sources.

Nominees are considered based upon their ability to carry out the goals of section 135 of the Trade Act of 1974, as amended. Secondary criteria are ensuring that the Committees are balanced in terms of points of view, demographics, geography, and company size. Appointments to all ISACs and IFACs are made without regard to political affiliation.

Application Procedures

Requests for applications should be sent to the Director of the Industry Consultations Program, U.S. Department of Commerce, 14th and Constitution Avenue, NW, Room 2015–B, Washington, DC 20230.

This notice is issued under the Federal Advisory Committee Act (5 U.S.C., app. 2) and 21 CFR part 14 relating to advisory committees.

Dated: March 13, 2002.

Linda M. Conlin,

Assistant Secretary for Trade Development.

[FR Doc. 02–6660 Filed 3–19–02; 8:45 am]

BILLING CODE 3510–DR–P

DEPARTMENT OF COMMERCE

National Oceanic and Atmospheric Administration

[Docket No. 020213030–2030–01; I.D. No. 012202C]

Announcement of Funding Opportunity to Submit Proposals for the Monitoring and Event Response for Harmful Algal Blooms (MERHAB) Program

AGENCY: Center for Sponsored Coastal Ocean Research/Coastal Ocean Program (CSCOR/COP), National Ocean Service (NOS), National Oceanic and Atmospheric Administration (NOAA), Department of Commerce (DOC).

ACTION: Notice of funding availability for financial assistance for project grants and cooperative agreements.

SUMMARY: The purpose of this document is to advise the public that CSCOR/COP is soliciting proposals for two types of projects: targeted research and regional intensive monitoring.

CSCOR/COP is soliciting targeted research proposals for one to three years of research and development of tools, approaches and technologies that could be included as routine components of existing Harmful Algal Bloom (HAB) monitoring programs. CSCOR/COP is also soliciting proposals from regional multi-investigator partnerships of one to five years for intensive monitoring of HABs that build the capacity of existing local, state, tribal, or regional coastal monitoring programs to provide early warning of HAB events to coastal communities and increase regional ability to rapidly respond to HAB events. Funding is contingent upon the availability of Federal appropriations. Projects funded under this announcement are anticipated to have a September 1, 2002, start date.

DATES: The deadline for receipt of proposals at the CSCOR/COP office is 3 p.m., e.s.t., April 25, 2002. Note that late-arriving applications provided to a delivery service on or before April 24, 2002, with delivery guaranteed before 3 p.m., e.s.t., on April 25, 2002, will be accepted for review if the applicant can document that the application was provided to the delivery service with delivery to the address listed below guaranteed prior to the specified closing date and time and, in any event, the proposals are received in the CSCOR/COP office by 3 p.m. e.s.t., no later than two business days following the closing date.

ADDRESSES: Submit the original and 19 copies of your proposal to (MERHAB02) Center for Sponsored Coastal Ocean Research/Coastal Ocean Program (N/SCI2), SSMC No. 4, 8th Floor, Station 8243, 1305 East-West Highway, Silver Spring, MD 20910. NOAA and Standard Form Applications with instructions are accessible on the CSCOR/COP Internet site http://www.cop.noaa.gov under the COP Grants Information Section, Part D, Application Forms for Initial Proposal Submission. For application forms, see Budget and

Application forms section. Forms may be viewed and, in most cases, filled in by computer. All forms must be printed, completed, and mailed to CSCOR/COP with original signatures. If you are unable to access this information, you may call CSCOR/COP at 301–713–3338 to leave a mailing request.

FOR FURTHER INFORMATION CONTACT: *Technical Information.* Marc Suddleson, MERHAB 2002 Program Manager, CSCOR/COP, 301–713–3338/ext 162, Internet: marc.suddleson@noaa.gov

Business Management Information. Leslie McDonald, COP Grants Administrator, 301–713–3338/ext 155, Internet: Leslie.McDonald@noaa.gov

SUPPLEMENTARY INFORMATION: The following web sites furnish supplementary information from reports dealing with harmful algal blooms: Boesch et.al Feb 1997, Harmful Algal Blooms in Coastal Waters: Options for Prevention, Control and Mitigation, Silver Spring, MD at http://www.cop.noaa.gov/pubs/das/das10.html; and Anderson *et.al.* Sept 2000, Estimated Annual Economic Impact from Harmful Algal Blooms (HABs) in the U.S. WHOI at http://www.redtide.whoi.edu/hab pertinentinfo /Economics—Report.pdf).

Information on the Harmful Algal Bloom and Hypoxia Research and Control Act and the 2000 National Assessment of HABs in U.S. Waters, National Science and Technology Council Committee on Environment and Natural Resources (CENR), Washington, DC, can be located at http://www.habhrca.noaa.gov.

Details about ongoing MERHAB projects currently funded by the CSCOR/COP MERHAB Program are found at

http://www.cop.noaa.gov/Fact—Sheets/MERHAB.htm. Hard copies of these resources can be obtained from the CSCOR/COP office.

Background

Program Description

For complete program description and other requirements for CSCOR/COP, see the General Grant Administration Terms and Conditions annual notification in the **Federal Register** (66 FR 63019, December 4, 2001) and at the CSCOR/COP home page.

In spite of a growing list of affected resources and coastal communities, our ability to prevent, control, and mitigate the impacts of HABs remains limited. Acting on the findings of a 1996 NOAA and DOI Report, Harmful Algal Blooms in Coastal Waters: Options for Prevention, Control and Mitigation, the research agenda of the Ecology and Oceanography of Harmful Algal Bloom (ECOHAB) program for the past five years has focused on building a scientific understanding about the cause and behavior of HABs. ECOHAB continues to support research that develops understandings of the linkages between the biology, ecology, physiology, and behavior of harmful species and the physics, chemistry, bathymetry, and meteorology of the surrounding environment. ECOHAB research is developing the capabilities to forecast bloom landfall, evaluate toxicity, and provide mitigation strategies that might ameliorate the impact of blooms along U.S. coasts. ECOHAB is also producing new state-of-the art HAB technologies, such as detection assays and molecular probes.

With the maturation of ECOHAB and other HAB research programs, more effort is needed to adapt their research products into regionally and locally tested tools that can be used to prevent, control, or mitigate the impact of HABs. The 1996 NOAA and DOI Report noted that knowledge about the basic information on the causes and behavior of HABs would ultimately lead to the development of prevention, control, and mitigation (PCM) strategies. The plan called for Federal and state agencies with responsibilities for resource management, environmental protection, and public health to support PCM research.

While prevention of HABs is the preferred management option, effort to enhance the current abilities to reduce the incidence and extent of harmful algal blooms (before they begin) requires additional research and face legislative hurdles. For example, more research is needed to determine whether a cause-and-effect relationship exists between increased pollution and nutrient loading and an incidence of some HAB species (e.g., Pfiesteria, Pseudo-nitzchia, cyanobacteria). Further, a national regulatory strategy to effectively control polluted run off and nutrient loading is under development; but more research is required to educate decision makers.

Efforts to control HABs are also being explored, but these too face serious scientific and policy hurdles. Attempts to use chemicals to directly control HAB

cells encounter many logistical problems and environmental objections. Chemicals are likely to be nonspecific, indiscriminately targeting all co-occurring algae and other organisms along with the target algal species. Chemical application and other options, such as flocculants or biological controls need additional research to determine their wider impacts to the coastal ecosystem.

Strategies to mitigate or minimize human health risks, ecosystem damage, fisheries losses, and declines in tourism due to algal blooms are currently the best option for coastal management of the HAB problem. Many different types of actions can be taken to mitigate the impact of HABs, including forecasting bloom development and movement, monitoring HAB cells and toxins, and responding rapidly to HAB events.

Monitoring combined with rapid response to HAB events has been identified as the most effective way to mitigate the impact of HABs (CENR 2000). A number of coastal states have existing HAB monitoring programs designed to prevent human illness from shellfish poisoning syndromes and to monitor the environment for blooms and forecast their development and movement. State shellfish monitoring programs detect toxins in different fisheries species either to provide advance warning of outbreaks or to delineate areas that require harvest restrictions. State environmental monitoring programs for plankton and fish in coastal estuaries and bays provide early warning of blooms.

Many states supplement their HAB monitoring activities with rapid response teams that are deployed to assess suspected HAB events. HABs have the potential to develop rapidly, and often the observable event may be short-lived. Rapid response is essential to ensure that the appropriate sampling is done to determine whether a HAB event is in progress. Regions also have established communication networks to distribute information about outbreaks to researchers, managers, and the public. Providing rapid and accurate information is critical to assess the risks to resources and human health and to avoid public misconceptions about the safety of coastal resources. Such misconceptions have caused severe economic impacts to regions not directly affected by HAB events. A study completed by Woods Hole Oceanographic Institute in September 2000 calculated the total estimated annual cost from HABs on public health, commercial fisheries, recreation and tourism, and monitoring and management in the United States to be $49 million. This estimate was noted by the authors to be highly conservative and sensitive to single events that equal or exceed the total estimated economic impact.

Many coastal communities experiencing HABs are not covered by regular public or private monitoring programs for HABs, and many do not receive adequate information about outbreaks. State monitoring programs have not kept pace with the expansion of the HABs problem. Tight state budgets and the need to monitor for more toxins in more organisms over larger areas have left many monitoring programs underfunded. Further, support of state monitoring efforts through the Federal Clean Water Program has not specifically addressed the need for increased HAB monitoring. The problem is exacerbated by managers' inability to quantify the benefits to human health, commercial fisheries, recreation and tourism of controlling HABs and to compare these to the costs of mitigation strategies.

CSCOR/COP Program Interest

Through the MERHAB program, CSCOR/COP intends to build capabilities of local, state, tribal, and private sector for regular and intensive measurement of HAB parameters. This will make existing monitoring programs more efficient while providing better coverage in time and space. MERHAB will enable rigorous field testing of state-of-the-art technology through targeted projects and will incorporate the new methods of detecting and tracking HABs into existing monitoring programs through regional, intensive monitoring projects. MERHAB will also develop event-response capabilities within affected regions to ensure trained and equipped personnel are able to mobilize quickly, conduct appropriate sampling and testing, and communicate effectively during HAB events.

With faster, less expensive, and more reliable detection methods for HAB cells and toxins, and stronger mechanisms in place to respond to outbreaks, programs will be better able to mitigate the impact of HABs on vital resources and will protect public health. As a result, managers will be able to better address the expanding HAB problems facing their coastal regions and, therefore, they will be better positioned to request long-term support from Federal and state agencies or from other funding entities.

Goal

The primary goal of the MERHAB program is to incorporate products generated from past or ongoing HAB research programs into operational components of existing monitoring programs in HAB-impacted coastal regions. MERHAB is not intended to provide long-term support for routine monitoring efforts.

A. MERHAB-Targeted Research Projects

(1) Objectives: (a) Develop a technology that will enhance HAB monitoring activities in U.S. coastal waters; and (b) incorporate that technology into existing HAB monitoring programs.

(2) Characteristics: (a) Should rigorously field-test new technologies to detect algal species, toxin, or toxicity and/or monitor the environmental conditions that support HABs. New technologies may include, but are not limited to, rapid field assays for shellfish, improved diagnostic techniques for in situ detection of HAB cells, and remote sensing technology to help target sampling efforts; (b) May be led either by an individual or by small investigative team; and (c) Must address specified research needs of the HAB community.

Investigators should include in their work plans efforts to build support for the incorporation of technology into one or more existing HAB monitoring programs. (See Part II: Further Supplementary Information Section (11) ''Project Funding Priorities.'')

B. MERHAB-regional, Intensive Monitoring Projects

(1) Objectives: (a) Develop new or increase existing regional capabilities for HAB monitoring; (b) Incorporate new tools for HAB measurement into existing monitoring efforts; (c) Include local, state, regional, Federal, or non-governmental entities as active partners in identifying environmental measurements and their importance to managing coastal resources and protecting human health (i.e. generating public advisories) in the area; (d) Determine long-term local and regional support that will assume financial responsibility for resulting enhancements in HAB monitoring once NOAA support has ended; and (e) Develop local and/or regional capabilities to respond to HAB events.

(2) Characteristics: (a) Include a suite of annual studies and involve a multi-disciplinary, collaborative team of investigators. The team should represent groups with strong interests in improved HAB monitoring, including, but not limited to, the natural and social science research community, existing monitoring programs, communities dependent upon affected resources, industry, and non-profit organizations; (b) Provide evidence that local, state,

tribal, regional, and Federal representatives were consulted in the development of the proposal to ensure appropriate economic, regulatory, and management issues are addressed; (c) Include a plan for continued consultation with these representatives to facilitate the incorporation of research results into existing monitoring programs and to identify means to continue HAB monitoring efforts after MERHAB project funding has ended; (d) Form a management team with a designated chairperson serving as the main point of contact with the MERHAB Program Manager.

In similar CSCOR research programs (i.e. ECOHAB), management teams provide strong leadership and solid partnerships among principal investigators and collaborators. Teams serve to interpret results collected from the expanded suite of pilot studies, permitting acceptance or rejection of the approaches, techniques, or tools explored during each annual budget period. MERHAB management teams will also analyze results for application under local conditions and assess effectiveness under specific constraints so that application to other coastal systems or species may be determined.

Shared Research Project Characteristics

The following characteristics are shared by both MERHAB-Targeted projects and MERHAB-regional, intensive monitoring projects.

(1) Project results will be distributed to stakeholders via scientific, peer-reviewed articles, synthesis documents, briefings, electronic web sites, and any other means defined by the proposers.

(2) Project proposals should clearly identify a timetable of accomplishments and major program elements that will lead to specific interim and final assessments of applicability and effectiveness of a number of monitoring approaches.

Continuation of funding will be contingent upon the determination by the awarding agency that the selected project is on course to provide both interim and final products that will improve HAB monitoring capabilities in the local or national coastal environment impacted by HABs.

Expected Products and Outcomes

A. MERHAB-Targeted Projects

(1) Development and testing of new HAB monitoring tools;

(2) Demonstration of effective application of technology in an existing monitoring program; and

(3) Comprehensive data analysis and integration that advances the state of science and management (i.e. technical reports, peer-reviewed publications, databases, numerical and conceptual models, etc.).

B. MERHAB-regional, Intensive Monitoring Projects

(1) Include regional stakeholder input and participation through means that may include, but are not limited to, annual workshops, management and technical advisory committees that involve a broad spectrum of regional interests and training in use of new technology;

(2) Provide recommendations to management of the parameters to be measured in a region and the types of instruments that should be developed or adapted into existing monitoring programs;

(3) Deploy new HAB monitoring tools in existing monitoring programs;

(4) Conduct comprehensive data analysis and integration that advances the state of science and management. (i.e. technical reports, peer-reviewed publications, data bases, numerical and conceptual models; regional case studies with explicit applications to important management issues; risk analysis of management scenarios; regional economic valuation of direct and indirect costs associated with HAB events; and region-specific management recommendations based on study results);

(5) Accept commitments from one or more local, state, tribal, regional, or Federal organizations for continued, long-term support of expanding HAB monitoring capabilities;

(6) Develop real-time, scientific response capability during HAB outbreaks for the region that includes, but is not limited to, the use of local experts, establishing local academic-government- NGO-private partnerships for providing immediate analytical and sampling capacities, and expanding local abilities for transferring samples to analytical services outside the region; and

(7) Outreach to improve awareness of HAB outbreaks and their environmental and societal costs, and to mitigate their impact on vital natural resources, public health and local/regional economies.

Part I: Schedule and Proposal Submission

This document requests full proposals only. The provisions for proposal preparation provided here are mandatory. Proposals received after the published deadline or proposals that deviate from the prescribed format will be returned to the sender without further consideration. Information regarding this announcement, additional background information, and required Federal forms are available on the COP home page.

Full Proposals

Applications submitted in response to this announcement require an original proposal and 19 proposal copies at time of submission. This includes color or high-resolution graphics, unusually sized materials, or otherwise unusual materials submitted as part of the proposal. For color graphics, submit either color originals or color copies. The stated requirements for the number of proposal copies provide for a timely review process. Facsimile transmissions and electronic mail submission of full proposals will not be accepted.

Required Elements

All recipients must follow the instructions in the preparation of the CSCOR/COP application forms included in Part II: Further Supplementary Information, (10) Application forms and kit. Each proposal must also include the following nine elements or it will be returned to sender without further consideration:

(1) *Standard Form 424.* At time of proposal submission, all applicants shall submit the Standard Form, SF–424 (Rev 7–97), ''Application for Federal Assistance,'' to indicate the total amount of funding proposed for the whole project period. This form is to be the cover page for the original proposal and all requested copies. Multi-institutional proposals must include signed SF–424 forms from all institutions requesting funding.

(2) *Signed summary title page.* The title page should be signed by the Principal Investigator (PI). The Summary Title page identifies the project's title starting with the acronym MERHAB 2002, a short title (less than 50 characters), the lead PI's name and affiliation, and complete address, phone, FAX, and E-mail information. The requested budget for each fiscal year should be included on the Summary Title page. Multi-investigator proposals must include the names and affiliations of each investigator on the title page. Multi-institution proposals must also identify the lead investigator from each fiscal year for each institution and the requested funding for each fiscal year for each institution on the title page, but no signatures are required on the title page from the additional institutions. Lead investigator and separate budget information is not requested on the title page for institutions that are proposed to receive

funds through a subcontract to the lead institution.

(3) *One-page abstract/project summary.* The Project Summary (Abstract) Form, submitted with the application, must include summaries of the problem, rationale, scientific objectives and/or hypotheses to be tested, and a brief summary of work to be completed. The prescribed CSCOR/COP format for the Project Summary Form can be found on the CSCOR/COP Internet site under the CSCOR/COP Grants Information section, Part D.

The summary should appear on a separate page, headed with the proposal title, institution(s), investigator(s), total proposed cost, and budget period. It should be written in the third person. The summary is used to help compare proposals quickly and allows the respondents to summarize these key points in their own words.

(4) *Statement of work/project description.* The statement of the proposed work/project must be complete and include: identification of the problem, scientific objectives, proposed methodology, relevance to the MERHAB 2002 program goals, and its scientific priorities. For MERHAB-Targeted project proposals, the project description (including relevant results from prior support) should not exceed 15 pages. For MERHAB-regional, intensive monitoring project proposals, the project description (including relevant results from prior support) should not exceed 20 pages. Both page limits are inclusive of figures, other visual materials, and letters of endorsement, but are exclusive of references, a milestone chart, and letters of collaboration from unfunded collaborators.

This section should clearly identify project management with a description of the functions of each PI within a team. It should provide a full scientific justification for the research, rather than simply reiterating justifications presented in this document. It should also include:

(a) The objective for the period of proposed work and its expected significance;

(b) The relation to the present state of knowledge in the field and relation to previous work and work in progress by the proposing principal investigator(s);

(c) A discussion of how the proposed project lends value to the program goals;

(d) Potential coordination with other investigators; and,

(5) *References cited.* Reference information is required. Each reference must include the names of all authors in the same sequence they appear in the publications, the article title, volume number, page numbers, and year of publications. While there is no established page limitation, this section should include bibliographic citations only and should not be used to provide parenthetical information outside the 15–page MERHAB-Targeted project or the 20–page MERHAB-regional project descriptions.

(6) *Milestone chart.* It should provide time lines of major tasks covering the duration of the proposed project.

(7) *Budget and Application Forms* Both NOAA and CSCOR/COP-specific application forms may be obtained at the CSCOR/COP Grants website. Forms may be viewed and, in most cases, filled in by computer. All forms must be printed, completed, and mailed to CSCOR/COP. If applicants are unable to access this information, they may call the CSCOR/COP grants administrator previously listed in the section entitled **FOR FURTHER INFORMATION CONTACT**. At time of proposal submission, all applicants must submit the Standard Form, SF–424 (Rev 7–97) Application for Federal Assistance, to indicate the total amount of funding proposed for the whole project period. Applicants must also submit a COP Summary Proposal Budget Form for each fiscal year increment. Multi-institution proposals must include a Summary Proposal Budget Form for each institution. Use of this budget form will provide for a detailed annual budget and for the level of detail required by the CSCOR/COP program staff to evaluate the effort to be invested by investigators and staff on a specific project. The COP budget form is compatible with forms in use by other agencies that participate in joint projects with CSCOR/COP and can be found on the CSCOR/COP home page under COP Grants Information, Part D. All applications must include a budget narrative and a justification to support all proposed budget categories. The SF–424A, Budget Information (Non-Construction) Form, will be requested only from those applicants subsequently recommended for award.

Ship time needs should be clearly identified in the proposed budget. The investigator is responsible for requesting ship time and for meeting all requirements to ensure the availability of requested ship time. Copies of relevant ship time request forms should be included with the proposal.

(8) *Biographical sketch.* With each proposal, the following must be included: abbreviated curriculum vitae, up to two pages per investigator; a list of up to five publications most closely related to the proposed project and up to five other significant publications; and a list of all persons (including their organizational affiliation), in alphabetical order, who have collaborated on a project, book, article, or paper within the last 48 months must be included. If no collaborators exist this should be so indicated. Students, post-doctoral associates, and graduate and postgraduate advisors of the PI should also be disclosed. This information is used to help identify potential conflicts of interest or bias in the selection of reviewers.

(9) *Proposal format and assembly.* The original proposal should be clamped in the upper left-hand corner, but left unbound. The 19 additional copies can be stapled in the upper left-hand corner or bound on the left edge. The page margin must be one inch (2.5 cm) at the top, bottom, left, and right, and the typeface standard 12–point size must be clear and easily legible. Proposals should be single spaced.

Part II: Further Supplementary Information

(1) *Program authorities.* For a list of all program authorities for the Coastal Ocean Program, see General Grant Administration Terms and Conditions of the Coastal Ocean Program published in the **Federal Register** (66 FR 63019, December 4, 2001) and at the CSCOR/COP home page. Specific authority cited for this announcement is 16 U.S.C. 1442 and Pub.L. 105–383, title VI, Nov. 13, 1998, 112 Stat. 3447.

(2) *Catalog of Federal Domestic Assistance (CFDA) number.* The CFDA number for the Coastal Ocean Program is 11.478.

(3) *Program description.* For complete CSCOR/COP program descriptions, see General Grant Administration Terms and Conditions of the Coastal Ocean Program published in the **Federal Register** (66 FR 63019, December 4, 2001).

(4) *Funding availability.* Funding is contingent upon receipt of fiscal years 2002 - 2006 Federal appropriations. Approximately $2,000,000 per fiscal year will be available for supporting studies proposed by submissions to this announcement. Support in out years after FY 2002 is contingent upon the availability of funds. It is anticipated that three to five MERHAB-Targeted research projects will be funded at approximately $100,000 per year for up to three years and that two to three MERHAB-regional, intensive monitoring proposals will be funded at approximately $600,000 per year for up to five years.

If an application is selected for funding, NOAA has no obligation to provide any additional prospective

funding in connection with that award in subsequent years. Continuation of an award to increase funding or extend the period of performance is based on satisfactory performance and is at the total discretion of the funding agency. Priority for these funds will be given to proposals that promote balanced coverage of the science objectives stated under this announcement.

Publication of this document does not obligate the CSCOR/COP to any specific award or to obligate any part of the entire amount of funds available. Recipients and subrecipients are subject to all Federal laws and agency policies, regulations, and procedures applicable to Federal financial assistance awards.

(5) *Matching requirements*. None.

(6) *Type of funding instrument*. Either project grants or cooperative agreements will be used for non-Federal applicants. Interagency transfer agreements or other appropriate mechanisms other than project grants or cooperative agreements will be used for Federal applicants.

(7) *Eligibility criteria*. For complete eligibility criteria for the CSCOR/COP, see CSCOR/COP's General Grant Administration Terms and Conditions annual document in the **Federal Register** (66 FR 63019, December 4, 2001) and the CSCOR/COP home page. Eligible applicants are institutions of higher education, not-for-profit institutions, state, local and Indian tribal governments and Federal agencies. CSCOR/COP will accept proposals that include foreign researchers as collaborators with researchers who are affiliated with a U.S. academic institution, Federal agency, or other non-profit organization.

Applications from non-Federal and Federal applicants will be competed against each other. Proposals selected for funding from non-Federal applicants will be funded through a project grant or cooperative agreement under the terms of this notice. Proposals from NOAA employees selected for funding shall be effected by an intra-agency fund transfer. Proposals selected for funding from a non-NOAA Federal agency will be funded through an inter-agency transfer.

NOTE: Before non-NOAA Federal applicants may be funded, they must demonstrate that they have legal authority to receive funds from another Federal agency in excess of their appropriation. Because this announcement is not proposing to procure goods or services from applicants, the Economy Act (31 U.S.C. 1535) is not an appropriate legal basis.

(8) *Award period*. Full proposals for targeted projects can cover a project period of up to three years, and full proposals for regional, intensive monitoring projects can cover a project period of up to five years. Multi-year project period funding may be funded incrementally on an annual basis, but, once awarded, multi-year projects will not compete for funding in subsequent years. Each annual award shall require an Implementation Plan and statement of work that can be easily divided into annual increments of meaningful work representing solid accomplishments (if prospective funding is not made available, or is discontinued).

(9) *Indirect costs*. Regardless of any approved indirect cost rate applicable to the award, the maximum dollar amount of allocable indirect costs for which DOC will reimburse the recipient shall be the lesser of: (a) the line item amount for the Federal share of indirect costs contained in the approved budget of the award; or (b) the Federal share of the total allocable indirect costs of the award based on the indirect cost rate approved by a cognizant or oversight Federal agency and current at the time the cost was incurred, provided the rate is approved on or before the award end date.

(l0) *Application forms and kit*. For complete information on application forms for the CSCOR/COP, see CSCOR/COP's annual General Grant Administration Terms and Conditions Document in the **Federal Register** (66 FR 63019, December 4, 2001) at the CSCOR/COP home page and the information given under Required Elements, paragraph (7) Budget.

(11) *Project funding priorities*. For description of project funding priorities, see CSCOR/COP's annual General Grant Administration Terms and Conditions Document in the **Federal Register** (66 FR 63019, December 4, 2001) and the CSCOR/COP home page.

(12) *Evaluation criteria*. For complete information on evaluation criteria, see CSCOR/COP's annual General Grant Administration Terms and Condition Document in the **Federal Register** (66 FR 63019, December 4, 2001) and the CSCOR/COP home page.

(13) *Selection procedures*. For complete information on selection procedures, see CSCOR/COP's annual General Grant Administration Terms and Conditions Document in the **Federal Register** (66 FR 63019, December 4, 2001) and the CSCOR/COP home page. All proposals received under this specific Document will be evaluated and ranked individually in accordance with the assigned weights of the above evaluation criteria by independent peer mail review and/or panel review. No consensus advice will be given by the independent peer mail review or the review panel.

(14) *Other requirements*. (a) For a complete description of other requirements, see CSCOR/COP's annual General Grant Administration Terms and Conditions Document in the **Federal Register** (66 FR 63019, December 4, 2001) and the CSCOR/COP home page. NOAA has specific requirements that environmental data be submitted to the National Oceanographic Data Center (see section 16, Data Archiving).

(b) the Department of Commerce Pre-Award Notification Requirements for Grants and Cooperative Agreements contained in the **Federal Register** (66 FR 49917, October 1, 2001) are applicable to this solicitation. However, please note that the Department of Commerce will not implement the requirements of Executive Order 13202 (66 FR 49921), pursuant to guidance issued by the Office of Management and Budget in light of a court opinion which found that the Executive Order was not legally authorized. See Building and Construction Trades Department v. Allbaugh, 172 F. Supp. 2d 138 (D.D.C. 2001). This decision is currently on appeal. When the case has been finally resolved, the Department will provide further information on implementation of Executive Order 13202.

(c) Please note that NOAA is developing a policy on internal overhead charges; NOAA scientists considering submission of proposals should contact the appropriate CSCOR/COP Program Manager for the latest information.

(15) *Intergovernmental review*. Applications under this program are not subject to Executive Order 12372, ''Intergovernmental Review of Federal Programs.'' It has been determined that this notice is not significant for purposes of Executive Order 12866. Pursuant to 5 U.S.C. 553(a) (2), an opportunity for public notice and comment is not required for this notice relating to grants, benefits and contracts. Because this notice is exempt from the notice and comment provisions of the Administrative Procedure Act, a Regulatory Flexibility Analysis is not required, and none has been prepared. It has been determined that this notice does not contain policies with Federalism implications as that term is defined in Executive Order 13132.

(16) *Data archiving*. Any data collected in projects supported by CSCOR/COP must be delivered to a National Data Center (NDC), such as the National Oceanographic Data Center (NODC), in a format to be determined by the institution, the NODC, and Program

Officer. It is the responsibility of the funded institution for the delivery of these data; the DOC will not provide additional support for delivery beyond the award. Additionally, all biological cultures established, molecular probes developed, genetic sequences identified, mathematical models constructed, or other resulting information products established through support provided by CSCOR/COP are encouraged to be made available to the general research community at no or a modest handling charge (to be determined by the institution, Program Officer, and DOC). For more details, refer to CSCOR/COP data policy posted at the COP home page.

(17) This notification involves collection-of-information requirements subject to the Paperwork Reduction Act (PRA). The use of Standard Forms 424, 424A, 424B, and SF-LLL has been approved by the Office of Management and Budget (OMB) under control numbers 0348–0043, 0348–0044, 0348–0040 and 0348–0046.

The following requirements have been approved by OMB under control number 0648–0384; a Summary Proposal Budget Form (30 minutes per response), a Project Summary Form (30 minutes per response), a standardized format for the annual Performance Report (5 hours per response), a standardized format for the Final Report (10 hours per response), and the submission of up to 20 copies of proposals (10 minutes per response). The response estimates include the time for reviewing instructions, searching existing data sources, gathering and maintaining the data needed, and completing and reviewing the collection of information.

Send comments regarding these requirements and the burden estimate, or any other aspect of this collection of information, including suggestions for reducing this burden, to leslie.mcdonald@noaa.gov. Copies of these forms and formats can be found on the CSCOR/COP home page under Grants Information sections, Parts D and F.

Notwithstanding any other provision of law, no person is required to respond to, nor shall any person be subject to a penalty for failure to comply with a collection of information subject to the requirements of the Paperwork Reduction Act, unless that collection displays a currently valid OMB control number.

Dated: March 11, 2002.

Jamison S. Hawkins,

Deputy Assistant Administrator for Ocean Services and Coastal Zone Management.

[FR Doc. 02–6747 Filed 3–19–02; 8:45 am]

BILLING CODE 3510–JS–S

DEPARTMENT OF COMMERCE

National Oceanic and Atmospheric Administration

[I.D. 030602F]

Atlantic Highly Migratory Species; Advisory Panel Meetings

AGENCY: National Marine Fisheries Service (NMFS), National Oceanic and Atmospheric Administration (NOAA), Commerce.

ACTION: Notification of Advisory Panel meetings.

SUMMARY: NMFS will hold joint meetings of the Atlantic Highly Migratory Species Advisory Panel (HMS AP) and the Atlantic Billfish Advisory Panel (Billfish AP), April 1 through 3, 2002, in Silver Spring, MD. The intent of these meetings is to consider alternatives for the conservation and management of highly migratory species.

DATES: The joint HMS-Billfish AP meetings will be held from 1 p.m. to 5 p.m. on Monday, April 1; from 8 a.m. to 5 p.m. on Tuesday, April 2; and from 8 a.m. to 3:30 p.m. on Wednesday, April 3, 2002.

ADDRESSES: The AP meetings will be held in the Holiday Inn, 8777 Georgia Ave. (Rt. 97), Silver Spring, MD 20910. Phone: 301–589–0800.

An agenda and materials related to the AP meeting are available from Othel Freeman, Highly Migratory Species Management Division, 1315 East-West Highway, Silver Spring, MD 20910, 301–713–2347.

FOR FURTHER INFORMATION CONTACT: Dr. Ronald G. Rinaldo, 301–713–2347.

SUPPLEMENTARY INFORMATION: The actions to be discussed by the APs are necessary to address requirements of the Magnuson-Stevens Fishery Conservation and Management Act and to implement recommendations of the International Commission for the Conservation of Atlantic Tunas as required by the Atlantic Tunas Convention Act, for the conservation and management of highly migratory species.

Special Accomodations

These meetings are physically accessible to people with disabilities. Requests for sign language interpretation or other auxiliary aids should be directed to Dr. Rinaldo (see **FOR FURTHER INFORMATION CONTACT**) at least 7 days prior to the meetings.

Authority: 16 U.S.C. 961 *et seq.*, and 16 U.S.C. 1801 *et seq.*

Dated: March 13, 2002.

John H. Dunnigan,

Director, Office of Sustainable Fisheries, National Marine Fisheries Service.

[FR Doc. 02–6712 Filed 3–15–02; 5:02 pm]

BILLING CODE 3510–22–S

DEPARTMENT OF COMMERCE

National Oceanic and Atmospheric Administration

[I.D. 031402D]

New England Fishery Management Council; Public Meetings

AGENCY: National Marine Fisheries Service (NMFS), National Oceanic and Atmospheric Administration (NOAA), Commerce.

ACTION: Notice of public meetings.

SUMMARY: The New England Fishery Management Council (Council) is scheduling public meeting of its Groundfish and Monkfish Oversight Committees in April, 2002. Recommendations from these committees will be brought to the full Council for formal consideration and action, if appropriate.

DATES: These meetings will be held between April 9 and 11, 2002. *See* **SUPPLEMENTARY INFORMATION** for specific dates and times.

ADDRESSES: The meetings will be held in New London, CT and Warwick, RI. *See* **SUPPLEMENTARY INFORMATION** for specific locations.

Council address: New England Fishery Management Council, 50 Water Street, Newburyport, MA 01950.

FOR FURTHER INFORMATION CONTACT: Paul J. Howard, Executive Director, New England Fishery Management Council (978) 465-0492; telephone: (978) 465-0492.

SUPPLEMENTARY INFORMATION: *Tuesday, April 9, 2002 at 9:30 a.m.*–Groundfish Oversight Committee Meeting.

Location: Radisson Hotel, 35 Governor Winthrop Blvd, New London, CT 06320; telephone: (860) 443-7000.

The Groundfish Oversight Committee will continue development of Amendment 13 to the Northeast Multispecies Fishery Management Plan (FMP). Amendment 13 will end overfishing and establish rebuilding

schedules for overfished stocks. At a meeting on February 27, 2002, the New England Council decided to develop groundfish management measures for five broad areas and one user group: inshore Gulf of Maine, offshore Gulf of Maine, eastern Georges Bank, western Georges Bank, Southern New England/Mid Atlantic, and recreational/charter/party. This meeting will focus on commercial fishing for groundfish in the Southern New England/Mid-Atlantic area, the boundaries for this area will be determined at the March 27, 2002 Groundfish Committee meeting. Interested parties will be consulted to identify management measures that will achieve specific biological, economic, and social objectives identified by the Council. Such measures may include, but are not limited to, trip or possession limits, changes to the days-at-sea program, year-round or seasonal closed areas, or gear changes. The committee will consider these suggested measures and will develop a recommendation that will be reviewed by the Council at a later date. After Council approval, the measures will be analyzed and included in a draft supplemental environmental impact statement. The committee may also consider alternatives to this area management approach if technical advice received at the March 19, 2002 Council meeting suggests it is not feasible.

Wednesday, April 10, 2002 at 9:30 a.m. and Tuesday, April 11, 2002 at 8:30 a.m.–Monkfish Oversight Committee Meeting.

Location: Radisson Airport Hotel Providence; 2081 Post Road, Warwick, RI 02886; telephone: (401) 739-3000.

The Committee will review information provided by the Advisory Panel, Plan Development Team and/or Councils' staffs and continue development of Amendment 2 management alternatives. Measures that may be included or adjusted in Amendment 2 include, but are not limited to, permit qualification for vessels fishing south of 38° N, trip limits, days-at-sea allocations, closed areas, minimum fish size, minimum mesh size, and area-specific management programs for the Northern and Southern Fishery Management Areas, as well as for the offshore fishery in the Southern Area. Amendment 2 will also implement revisions to the monkfish overfishing definitions. Measures to be considered in Amendment 2 will be designed to achieve fishing mortality targets as well as to minimize bycatch, interactions with protected species and fishery impacts on essential fish habitat.

Although non-emergency issues not contained in this agenda may come before this group for discussion, those issues may not be the subject of formal action during this meeting. Action will be restricted to those issues specifically listed in this notice and any issues arising after publication of this notice that require emergency action under section 305(c) of the Magnuson-Stevens Act, provided the public has been notified of the Council's intent to take final action to address the emergency.

Special Accommodations

These meetings are physically accessible to people with disabilities. Requests for sign language interpretation or other auxiliary aids should be directed to Paul J. Howard (*see* **ADDRESSES**) at least 5 days prior to the meeting dates.

Dated: March 15, 2002.

Richard W. Surdi,

Acting Director, Office of Sustainable Fisheries, National Marine Fisheries Service.

[FR Doc. 02–6749 Filed 3–19–02; 8:45 am]

BILLING CODE 3510–22–S

DEPARTMENT OF COMMERCE

National Oceanic and Atmospheric Administration

[I.D. 031102B]

Pacific Fishery Management Council; Public Meeting

AGENCY: National Marine Fisheries Service (NMFS), National Oceanic and Atmospheric Administration (NOAA), Commerce.

ACTION: Notice of public meeting.

SUMMARY: The Groundfish Stock Assessment Review (STAR) Panel for bocaccio and canary rockfish will hold a work session which is open to the public.

DATES: The bocaccio and canary rockfish STAR Panel will meet beginning at 9 a.m., April 15, 2002. The meeting will continue on April 16, 2002 beginning at 8 a.m. through April 19, 2002. The meetings will end at 5 p.m. each day, or as necessary to complete business.

ADDRESSES: The Pacific bocaccio and canary rockfish STAR Panel meeting will be held at NMFS Northwest Fisheries Science Center, Auditorium, 2725 Montlake Blvd. E, Seattle, WA 98112; telephone: 206–860–3200.

Council address: Pacific Fishery Management Council, 7700 NE Ambassador Place, Suite 200, Portland, OR 97220-1384.

FOR FURTHER INFORMATION CONTACT: Mr. Chuck Tracy, Staff Officer; 503–326–6352.

SUPPLEMENTARY INFORMATION: The purpose of the meeting is to review draft stock assessment documents and any other pertinent information, work with the Stock Assessment Team to make necessary revisions, and produce a STAR Panel report for use by the Council family and other interested persons.

Entry to the Northwest Fisheries Science Center requires identification with photograph (such as a student ID, state drivers license, etc.). A security guard will review the identification and issue a Visitor's Badge valid only for the date of the meeting.

Although nonemergency issues not contained in STAR Panel agenda may come before the STAR Panel for discussion, those issues may not be the subject of formal Panel action during this meeting. STAR Panel action will be restricted to those issues specifically listed in this notice, and any issues arising after publication of this notice that require emergency action under section 305(c) of the Magnuson-Stevens Fishery Conservation and Management Act, provided the public has been notified of the Panel's intent to take final action to address the emergency.

Special Accommodations

The meeting is physically accessible to people with disabilities. Requests for sign language interpretation or other auxiliary aids should be directed to Ms. Carolyn Porter at 503–326–6352 at least 5 days prior to the meeting date.

Dated: March 15, 2002.

Richard W. Surdi,

Acting Director, Office of Sustainable Fisheries, National Marine Fisheries Service.

[FR Doc. 02–6750 Filed 3–19–02; 8:45 am]

BILLING CODE 3510–22–S

COMMITTEE FOR THE IMPLEMENTATION OF TEXTILE AGREEMENTS

Reconfirmation of a Previous Directive Concerning Visa and Quota Requirements for Textiles and Textile Products Entered as Sets

March 15, 2002.

AGENCY: Committee for the Implementation of Textile Agreements (CITA).

ACTION: Issuing a directive to the Commissioner of Customs reconfirming a previous directive.

EFFECTIVE DATE: March 18, 2002.

FOR FURTHER INFORMATION CONTACT: Martin Walsh, International Trade Specialist, Office of Textiles and Apparel, U.S. Department of Commerce, (202) 482–3400.

SUPPLEMENTARY INFORMATION:

Authority: Executive Order 11651 of March 3, 1972, as amended; Section 204 of the Agricultural Act of 1956, as amended (7 U.S.C. 1854).

In a notice and letter to the Commissioner of Customs published in the **Federal Register** on August 24, 1989 (54 FR 35223), CITA directed the U.S. Customs Service to apply all otherwise applicable visa and quota requirements to textiles and textile products which are classified as components of a set. This directive applied to all items which, if imported separately, would have required a visa and the reporting of quota. Recently, there has been uncertainty concerning the continuing applicability of this directive. The letter published below reconfirms the previously published directive.

D. Michael Hutchinson,

Acting Chairman, Committee for the Implementation of Textile Agreements.

Committee for the Implementation of Textile Agreements

March 15, 2002.

Commissioner of Customs,
Department of the Treasury, Washington, DC 20229.

This letter reconfirms the directive of August 18, 1989 that clarified the intent of the Committee for the Implementation of Textile Agreements on the applicability of visa requirements and quota reporting of textiles and textile products entered as components of sets under General Rule of Interpretation (GRI) 3 of the Harmonized Tariff Schedule (HTS).

Effective on March 18, 2002, the directive of August 18, 1989 is reissued as follows:

Under the terms of Section 204 of the Agricultural Act of 1956, as amended (7 U.S.C. 1854); and in accordance with the provisions of Executive Order 11651 of March 3, 1972, as amended; all applicable visa and quota requirements will apply for textiles and textile products which are classified as components of a set. This rule applies to all items which, if imported separately, would have required a visa and the reporting of quota.

Effective on March 18, 2002, you are directed to prohibit entry for consumption or withdrawal from warehouse for consumption into the United States (i.e., the 50 states, the District of Columbia and the Commonwealth of Puerto Rico) of any textile item for which classification is claimed as sets under GRI 3 of the HTS, where a separate textile category currently exists or comes into existence requiring separate reporting of the components forming those sets.

Entry shall be permitted if all visa and quota requirements are met.

The Committee for the Implementation of Textile Agreements has determined that these actions fall within the foreign affairs exception to the rulemaking provisions of 5 U.S.C. 553(a)(1).

Sincerely,
D. Michael Hutchinson,
Acting Chairman, Committee for the Implementation of Textile Agreements.

[FR Doc.02–6804 Filed 3–18–02; 9:54 am]

BILLING CODE 3510–DR–S

DEPARTMENT OF DEFENSE

Department of the Air Force

HQ USAF Scientific Advisory Board

AGENCY: Department of the Air Force, DoD.

ACTION: Notice of meeting.

SUMMARY: Pursuant to Public Law 92–463, notice is hereby given of the forthcoming meeting of the Task Force on the Threat of Asymmetric Attack. The purpose of the meeting is to allow the SAB and study leadership to review their progress on strategies for the conduct of asymmetric warfare. This meeting will be closed to the public.

DATES: April 1, 2002.

ADDRESSES: Frost & Associates, 660 Southpointe Court, Suite 210, Colorado Springs, CO 80906.

FOR FURTHER INFORMATION CONTACT: Mr. Robert Ripperger, Air Force Scientific Advisory Board Secretariat, 1180 AirForce Pentagon, Rm 5D982, Washington DC 20330–1180, (703) 697–4811.

Pamela D. Fitzgerald,

Air Force Federal Register Liaison Officer.

[FR Doc. 02–6679 Filed 3–19–02; 8:45 am]

BILLING CODE 5001–05–U

DEPARTMENT OF DEFENSE

Department of the Army

Preparation of Environmental Impact Statement (EIS) for Military Training Activities at Makua Military Reservation, Oahu, Hawaii

AGENCY: Department of the Army, DoD.

ACTION: Notice of intent.

SUMMARY: The Army proposed to resume consistent military training activities at Makua Military Reservation (MMR), Oahu, Hawaii, to provide for company level, modified live-fire exercises. In accordance with the Settlement Agreement and Stipulated Order between Malama Makua and the United States Department of Defense, filed 4 October 2001 (the ''Settlement Agreement''), the Army will conduct a limited number of live-fire training exercises during the term specified within for the preparation of the subject EIS. The Army needs to conduct a minimum of 18 company-level, combined arms, live-fire exercises per year. Other military components that have used Makua in the past include the Marine Corps, Army Reserves, and the Hawaii Army National Guard, which further increases the total number of required company combined-arms live-fire exercises (CALFEXs) per year. Conducting the required number of company CALFEXs is critical to maintaining the readiness of all military units assigned or stationed in Hawaii. Training at the company level is one of the key building blocks in the Army's progressive training doctrine where smaller units first train as smaller units and then train collectively as part of a larger unit. The training that a new infantry company commander receives during a company-level CALFEX is invaluable in teaching him the skills required to coordinate the combined arms support provided by helicopter, artillery, mortar, and combat engineer support teams when attacking an objective. These communication and coordination skills are essential later when several companies join together and train/fight as a battalion under the control of a battalion commander. The EIS will address, among other things, the potential direct, indirect and cumulative environmental impacts associated with the proposal to continue military training activities at MMR. The EIS development process will be conducted in accordance with the aforementioned Settlement Agreement and Stipulated Order.

ADDRESSES: Written comments may be forwarded to Mr. Calvin K. Mashita, U.S. Army Corps of Engineers, Honolulu Engineer District, Programs and Project Management Division, ATTN: CEPOH–PP–E (Mashita), Building 230, Fort Shafter, Hawaii 96858–5440.

FOR FURTHER INFORMATION CONTACT:

Makua training activities: Colonel William E. Ryan III, (808) 656–1289, fax (808) 656–1259; email *William.ryaniii@usace.army.mil* or by writing to Director of Public Works, U.S. Army Garrison Hawaii (USAG–HI), Schofield Barracks, Hawaii 96857–5013.

EIS information: Mr. Calvin K. Mashita, (808) 438–8417; fax (808) 438–8865; email *calvin.k.mashita@poh01.usace.army.mil* or by writing to Mr. Mashita at the above address.

SUPPLEMENTARY INFORMATION: Proposed alternatives to be considered may include, but not be limited to, the following:

(1) *Alternative 1:* Modified Live-Fire Training at Makua Military Reservation

(Proposed Action). The Army would conduct company CALFEXs at MMR but with certain restrictions. In particular, the Army would eliminate the use of TOW missiles, incendiary munitions, and tracers. Under this alternative, the Army will not be limited to the current number of CALFEXs specified in the Settlement Agreement.

(2) *Alternative 2:* No action. The Army will not conduct live-fire training exercises at MMR, except for the limited number of modified CALFEXs authorized by the Settlement Agreement.

(3) *Alternative 3:* Conduct CALFEX Training at an Alternate Site. Personnel and equipment required for CALFEX Training would be transported to one of the following alternate sites:

(a) *Alternative 3A:* Pohakuloa Training Area (PTA) on the Big Island of Hawaii.

(b) *Alternative 3B:* Continental United States (CONUS).

(c) *Alternative 3C:* A replacement training facility at another Army installation on Oahu. The Army would construct another facility on Oahu that could accommodate the company CALFEXs.

(4) *Alternative 4:* Return to Training Less Restrictive Than the Proposed Action. The Army would train with less restrictions on the types of weapon systems and the numbers of training exercises. For example, the Army would resume the use of tracer ammunition.

(5) *Alternative 5:* Conduct Non-Live Fire Training at MMR. The Army would conduct training exercises at MMR but without any live firing of weapons or devises otherwise of an incendiary nature.

Scoping Process: Federal, state and local agencies, and the public are invited to participate in the scoping process for the completion of this EIS. The scoping process will help identify potential impacts and key issues to be analyzed in the EIS. Individuals or organizations wishing to participate in the scoping process are invited to participate in a scoping meeting to be held in the Waianae District, on the island of Oahu. Notification of the time and location for the scoping meeting will be published in local newspapers. Additionally, written comments on the scope of analysis are invited and will be accepted within 15 days after the scoping meeting.

Dated: March 15, 2002.

Raymond J. Fatz,

Deputy Assistant Secretary of the Army, (Environment, Safety and Occupational Health) OASA(I&E).

[FR Doc. 02–6687 Filed 3–19–02; 8:45 am]

BILLING CODE 3710–08–M

DEPARTMENT OF ENERGY

[Docket No. EA–260]

Application To Export Electric Energy; EPCOR Merchant and Capital (US) Inc.

AGENCY: Office of Fossil Energy, DOE.

ACTION: Notice of application.

SUMMARY: EPCOR Merchant and Capital (US) Inc. (EPCOR) has applied for authority to transmit electric energy from the United States to Canada pursuant to section 202(e) of the Federal Power Act.

DATES: Comments, protests or requests to intervene must be submitted on or before April 4, 2002.

ADDRESSES: Comments, protests or requests to intervene should be addressed as follows: Office of Coal & Power Import/Export (FE–27), Office of Fossil Energy, U.S. Department of Energy, 1000 Independence Avenue, SW, Washington, DC 20585–0350 (FAX 202–287–5736).

FOR FURTHER INFORMATION CONTACT: Rosalind Carter (Program Office) 202–586–7983 or Michael Skinker (Program Attorney) 202–586–2793.

SUPPLEMENTARY INFORMATION: Exports of electricity from the United States to a foreign country are regulated and require authorization under section 202(e) of the Federal Power Act (FPA) (16 U.S.C. 824a(e)).

On February 7, 2002, the Office of Fossil Energy (FE) of the Department of Energy (DOE) received an application from EPCOR to transmit electric energy from the United States to Canada. EPCOR is a Delaware corporation with its principal place of business in Calgary, Alberta, Canada. EPCOR is a power marketer and will have title to any electricity exported to Canada.

EPCOR will purchase the power to be exported from electric utilities and federal power marketing agencies within the United States and arrange for the delivery of electric energy to Canada over the existing international transmission facilities owned by Basin Electric Power Cooperative, Bonneville Power Administration, Citizen Utilities, Eastern Maine Electric Cooperative, International Transmission Company, Joint Owners of the Highgate Project, Long Sault, Inc., Maine Electric Power Company, Maine Public Service Company, Minnesota Power Inc., Minnkota Power Cooperative, New York Power Authority, Niagara Mohawk Power Corporation, Northern States Power, and Vermont Electric Transmission Company. The construction, operation, maintenance, and connection of each of the international transmission facilities to be utilized by EPCOR, as more fully described in the application, has previously been authorized by a Presidential permit issued pursuant to Executive Order 10485, as amended.

EPCOR has requested that the Department of Energy (DOE) expedite the processing of this application so that EPCOR may assist in alleviating unexpected power shortages in the Canadian Providence of Alberta.

Procedural Matters: Any person desiring to become a party to this proceeding or to be heard by filing comments or protests to this application should file a petition to intervene, comment or protest at the address provided above in accordance with §§ 385.211 or 385.214 of the FERC's Rules of Practice and Procedures (18 CFR 385.211, 385.214). Fifteen copies of each petition and protest should be filed with DOE on or before the date listed above.

Comments on the EPCOR application to export electric energy to Canada should be clearly marked with Docket EA–260. Additional copies are to be filed directly with Rob Imbeau, EPCOR Merchant and Capital (US) Inc., c/o EPCOR Merchant and Capital L.P., 505 2nd Street, SW, 8th Floor, Calgary, Alberta T2P 1N8 Canada AND Timothy J. Moran, Victor A. Contract, Skadden, Arps, Slate, Meagher & Flom LLP, 1440 New York Avenue, NW, Washington, DC 20005–2111.

A final decision will be made on this application after the environmental impacts have been evaluated pursuant to the National Environmental Policy Act of 1969, and a determination is made by the DOE that the proposed action will not adversely impact on the reliability of the U.S. electric power supply system.

Copies of this application will be made available, upon request, for public inspection and copying at the address provided above or by accessing the Fossil Energy Home Page at *http://www.fe.doe.gov.* Upon reaching the Fossil Energy Home page, select ''Electricity Regulation,'' and then ''Pending Procedures'' from the options menus.

Issued in Washington, DC, on March 13, 2002.

Anthony J. Como,

Deputy Director, Electric Power Regulation, Office of Coal & Power Import/Export, Office of Coal & Power Systems, Office of Fossil Energy.

[FR Doc. 02–6686 Filed 3–19–02; 8:45 am]

BILLING CODE 6450–01–P

DEPARTMENT OF ENERGY

Worker Advocacy Advisory Committee Meeting

AGENCY: Department of Energy.

ACTION: Notice of open meeting.

SUMMARY: This notice announces a meeting of the Worker Advocacy Advisory Committee. The Federal Advisory Committee Act (Public Law 92–463, 86 Stat. 770), requires that notice of this meeting be published in the **Federal Register**.

DATES: Thursday, April 4, 2002, 12:30–5:30 p.m. and Friday, April 5, 2001, 8:00 a.m.–12:30 p.m.

ADDRESSES: Loews L'Enfant Plaza Hotel, 480 L'Enfant Plaza, SW., Washington, DC.

FOR FURTHER INFORMATION CONTACT: Judy Keating, Executive Administrator, Worker Advocacy Advisory Committee, U.S. Department of Energy, EH–8, 1000 Independence Avenue, SW, Washington, DC 20585, Telephone Number 202–586–7551, E-mail: judy.keating@eh.doe.gov.

SUPPLEMENTARY INFORMATION:

Purpose of the Meeting: To provide advice to the Director of the Office of Worker Advocacy of the Department of Energy on plans, priorities, and strategies for assisting workers who have been diagnosed with work-related illnesses.

Tentative Agenda

Welcome and Introductions
Organization of the Office of Worker Advocacy
Status of Interagency Work
Discussion of Subcommittee Topics, including claims processing, and Insurer and Contractor Relations
Public Comment
Next Steps/Path Forward

Public Participation: This two-day meeting is open to the public on a first-come, first-serve basis because of limited seating. Written statements may be filed with the committee before or after the meeting. Members of the public who wish to make oral statements pertaining to agenda items should contact Judy Keating at the address or telephone listed above. Requests to make oral statements must be made and received five days prior to the meeting; reasonable provision will be made to include the statement in the agenda. The Chair of the committee is empowered to conduct the meeting in a fashion that will facilitate the orderly conduct of business.

Minutes: The minutes of this meeting will be available for public review and copying at the Freedom of Information Reading Room, 1E–190, Forrestal Building, 1000 Independence Avenue, SW., Washington, DC, between 9 a.m. and 4 p.m., Monday through Friday, except holidays.

Issued in Washington, DC on March 15, 2002.

Rachel M. Samuel,

Deputy Advisory Committee Management Officer.

[FR Doc. 02–6763 Filed 3–19–02; 8:45 am]

BILLING CODE 6450–01–P

DEPARTMENT OF ENERGY

Federal Energy Regulatory Commission

[Docket No. CP02–6–001]

Colorado Interstate Gas Company; Notice of Amendment to Application

March 14, 2002.

Take notice that on March 4, 2002, Colorado Interstate Gas Company (CIG), Post Office Box 1087, Colorado Springs, Colorado 80944, filed pursuant to section 7(c) of the Natural Gas Act (NGA) and Part 157 of the Commission's Regulations in Docket No. CP02–6–001 an amendment to its pending application in Docket No. CP02–6–000 to modify the proposed expansion of its existing interstate pipeline system by reducing the lengths of the proposed loop line segments, all as more fully set forth in the application which is on file with the Commission and open to public inspection. This filing may also be viewed on the web at *http://www.ferc.gov* using the ''RIMS'' link, select ''Docket #'' and follow the instructions (call 202–208–2222 for assistance).

In its application in Docket No. CP02–6–000, CIG stated that it proposed to construct and operate facilities necessary to transport additional volumes of approximately 57.8 MMcf per day (55 MDth per day) of natural gas out of the Raton Basin Area in Colorado and New Mexico. In addition, CIG stated that it proposed to construct and operate facilities south of its Keyes Compressor Station to allow Raton Basin shippers to deliver incremental quantities of gas to interconnections with the interstate pipeline systems of El Paso Natural Gas Company and Northern Natural Gas Company. To accomplish this, CIG proposed to construct two loop line segments along its Campo Lateral and a loop of a portion of its existing Line 3A south of the existing Keyes Compressor Station.

CIG states that, subsequently, one of the shippers holding rights to a portion of the proposed incremental capacity on the Raton Basin 2002 Expansion Project was unable to meet the terms set forth in its Transportation Precedent Agreement with CIG, resulting in the termination of this agreement. CIG states that, as a result of the termination of the agreement, it now proposes to amend its application in this proceeding to revise the facilities to be constructed. Specifically, CIG states that it plans to reduce the lengths of the proposed pipeline loop segments, as follows:

(1) Reduce the length of 16-inch diameter pipeline loop of CIG's existing Campo Lateral from 25.61 miles to 22.10 miles; this loop line would extend from the outlet of the CIG's Trinidad Compressor Station in Section 25, Township 32 South, Range 63 West to a point west of Trinchera Creek in Section 21, Township 33 South, Range 59 West, all in Las Animas County, Colorado.

(2) Reduce the length of 16-inch diameter pipeline loop of CIG's existing Campo Lateral from 28.14 miles to 24.20 miles; this loop line would extend from the outlet of CIG's Kim Compressor Station in Section 31, Township 32 South, Range 54 West, Las Animas County, Colorado to a point east of County Road 1 in Section 29, Township 32 South, Range 50 West, Baca County, Colorado.

(3) Reduce the length of 20-inch diameter pipeline loop of CIG's existing Line 3A from 14.40 miles to 7.67 miles, this loop line would extend from the outlet of CIG's Keyes Compressor Station in Section 17, Township 5 North, Range 7 East to Gate 9/Keyes Meter Station in Section 23, Township 4 North, Range 7 East, all in Cimarron County, Oklahoma.

CIG states that the revised Campo Lateral loop line segments will increase the take-away capacity from the Raton Basin Area by approximately 47.3 MMcf per day (45 MDth per day). CIG further states that the 3A loop line will facilitate the delivery of incremental volumes to points on the southern end of its transmission system.

CIG estimates that the proposed cost of the expansion will be $22,070,400. Further, CIG states that the combination of existing and revised incremental

entitlements represent 100 percent of CIG's capacity out of the Raton Basin Area through the Campo Lateral.

Any questions regarding this amendment should be directed to Robert T. Tomlinson; Director, Regulatory Affairs; at (719) 520–3788; Colorado Interstate Gas Company; P.O. Box 1087; Colorado Springs, Colorado 80944. process.

Any person desiring to be heard or to make any protest with reference to said document should, on or before April 4, 2002, file with the Federal Energy Regulatory Commission; 888 First Street, NE., Washington, DC 20426 a protest or motion to intervene in accordance with the requirements of Rule 211 or 214 of the Commission's Rules of Practice and Procedure (18 CFR 385.211 or 385.214) and the Regulations under the NGA (18 CFR 157.10). All protests filed with the Commission will be considered by it in determining the appropriate action to be taken but will not serve to make the protestants parties to the proceeding. Any person wishing to become a party to a proceeding or to participate as a party in any hearing therein must file a motion to intervene in accordance with the Commission's Rules.

A person obtaining intervenor status will be placed on the service list maintained by the Secretary of the Commission and will receive copies of all documents issued by the Commission, filed by the applicant, or filed by all other intervenors. An intervenor can file for rehearing of any Commission order and can petition for court review of any such order. However, an intervenor must serve copies of comments or any other filing it makes with the Commission to every other intervenor in the proceeding, as well as filing an original and 14 copies with the Commission.

A person does not have to intervene, however, in order to have comments considered; a person, instead, may submit two copies of such comments to the Secretary of the Commission. Commenters will be placed on the Commission's environmental mailing list, will receive copies of environmental documents, and will be able to participate in meetings associated with the Commission's environmental review process. Commenters will not receive copies of all documents filed by other parties or issued by the Commission and will not have the right to seek rehearing or appeal the Commission's final order to a Federal court.

The Commission will consider all comments and concerns equally, whether filed by Commenters or those requesting intervenor status.

Comments, protests, and interventions may be filed electronically via the Internet in lieu of paper copies. See 18 CFR 385.2001(a) (1)(iii) and the instructions on the Commission's web site under the ''e-filing'' link.

Take further notice that, pursuant to the authority contained in and subject to the jurisdiction conferred upon the Federal Energy Regulatory Commission by Sections 7 and 15 of the NGA and the Commission's Rules of Practice and Procedure, a hearing will be held without further notice before the Commission or its designee on this document if no motion to intervene is filed within the time required herein, if the Commission on its own review of the matter finds that a grant of the certificate is required by the public convenience and necessity. If a motion for leave to intervene is timely filed, or if the Commission on its own motion believes that a formal hearing is required, further notice of such hearing will be duly given.

Under the procedure herein provided for, unless otherwise advised, it will be unnecessary for CIG to appear or be represented at the hearing.

Linwood A. Watson, Jr.,

Deputy Secretary.

[FR Doc. 02–6696 Filed 3–19–02; 8:45 am]

BILLING CODE 6717–01–P

DEPARTMENT OF ENERGY

Federal Energy Regulatory Commission

[Docket No. RP02–197–000]

Eastern Shore Natural Gas Company; Notice of Proposed Changes in FERC Gas Tariff

March 14, 2002.

Take notice that on March 11, 2002, Eastern Shore Natural Gas Company (ESNG) tendered for filing as part of its FERC Gas Tariff, Second Revised Volume No. 1,Thirty-Sixth Revised Sheet No. 7 and Thirty-Sixth Revised Sheet No. 8, with a proposed effective date of April 1, 2002.

ESNG states that the purpose of this instant filing is to track rate changes attributable to storage services purchased from Transcontinental Gas Pipe Line Corporation (Transco) under its Rate Schedules GSS and LSS. The costs of the above referenced storage services comprise the rates and charges payable under ESNG's respective Rate Schedules GSS and LSS. This tracking filing is being made pursuant to Section 3 of ESNG's Rate Schedules GSS and LSS.

ESNG states that copies of the filing have been served upon its jurisdictional customers and interested State Commissions.

Any person desiring to be heard or to protest said filing should file a motion to intervene or a protest with the Federal Energy Regulatory Commission, 888 First Street, NE, Washington, DC 20426, in accordance with Sections 385.214 or 385.211 of the Commission's Rules and Regulations. All such motions or protests must be filed in accordance with Section 154.210 of the Commission's Regulations. Protests will be considered by the Commission in determining the appropriate action to be taken, but will not serve to make protestants parties to the proceedings. Any person wishing to become a party must file a motion to intervene. Copies of this filing are on file with the Commission and are available for public inspection. This filing may also be viewed on the web at *http://www.ferc.gov* using the ''RIMS'' link, select ''Docket#'' and follow the instructions (call 202–208–2222 for assistance). Comments, protests and interventions may be filed electronically via the Internet in lieu of paper. See, 18 CFR 385.2001(a)(1)(iii) and the instructions on the Commission's web site under the ''e-Filing'' link.

Linwood A. Watson, Jr.,

Deputy Secretary.

[FR Doc. 02–6705 Filed 3–19–02; 8:45 am]

BILLING CODE 6717–01–P

DEPARTMENT OF ENERGY

Federal Energy Regulatory Commission

[Docket No. RP96–320–052]

Gulf South Pipeline Company, LP; Notice of Negotiated Rate Filing

March 14, 2002.

Take notice that on March 8, 2002, Gulf South Pipeline Company, LP (Gulf South) tendered for filing contracts between Gulf South and the following companies for disclosure of recently negotiated rate transactions. As shown on the contracts, Gulf South requests an effective date of April 1, 2002.

Special Negotiated Rate Between—

Gulf South Pipeline Company, LP and The Utilities Board of the City of Bay Minette, Contract #14483

Gulf South Pipeline Company, LP and The City of Pascagoula, Contract #27272

Gulf South states that it has served copies of this filing upon all parties on the official service list created by the Secretary in this proceeding Any person desiring to be heard or to protest said filing should file a motion to intervene or a protest with the Federal Energy Regulatory Commission, 888 First Street, NE, Washington, DC 20426, in accordance with Sections 385.214 or 385.211 of the Commission's Rules and Regulations. All such motions or protests must be filed in accordance with Section 154.210 of the Commission's Regulations. Protests will be considered by the Commission in determining the appropriate action to be taken, but will not serve to make protestants parties to the proceedings. Any person wishing to become a party must file a motion to intervene. Copies of this filing are on file with the Commission and are available for public inspection. This filing may also be viewed on the web at *http://www.ferc.gov* using the ''RIMS'' link, select ''Docket#'' and follow the instructions (call 202–208–2222 for assistance). Comments, protests and interventions may be filed electronically via the Internet in lieu of paper. See, 18 CFR 385.2001(a)(1)(iii) and the instructions on the Commission's web site under the ''e-Filing'' link.

Linwood A. Watson, Jr.,

Deputy Secretary.

[FR Doc. 02–6701 Filed 3–19–02; 8:45 am]

BILLING CODE 6717–01–P

DEPARTMENT OF ENERGY

Federal Energy Regulatory Commission

[Docket No. RP02–151–001]

Gulf South Pipeline Company, LP; Notice of Compliance Filing

March 14, 2002.

Take notice that on March 7, 2002, Gulf South Pipeline Company, LP (Gulf South) tendered for filing as part of its FERC Gas Tariff, Sixth Revised Volume No. 1, the following tariff sheets, to become effective February 25, 2002:

Substitute Second Revised Sheet No. 306
Substitute Original Sheet No. 307

Gulf South states that the above tariff sheets have been filed to comply with the Order issued February 22, 2002, 98 FERC ¶ 61,186. In its original filing, Gulf South proposed provisions concerning the allocated market and regulatory risks between Gulf South and its No Notice Service (NNS) Customers. The Commission directed Gulf South to remove the 90-day prior notice written provision and to file revised tariff sheets reflecting a more reasonable notice period. The compliance filing incorporates this change.

Any person desiring to protest said filing should file a protest with the Federal Energy Regulatory Commission, 888 First Street, NE, Washington, DC 20426, in accordance with Section 385.211 of the Commission's Rules and Regulations. All such protests must be filed in accordance with Section 154.210 of the Commission's Regulations. Protests will be considered by the Commission in determining the appropriate action to be taken, but will not serve to make protestants parties to the proceedings. Copies of this filing are on file with the Commission and are available for public inspection. This filing may also be viewed on the web at *http://www.ferc.gov* using the ''RIMS'' link, select ''Docket#'' and follow the instructions (call 202–208–2222 for assistance). Comments, protests and interventions may be filed electronically via the Internet in lieu of paper. See, 18 CFR 385.2001(a)(1)(iii) and the instructions on the Commission's web site under the ''e-Filing'' link.

Linwood A. Watson, Jr.,

Deputy Secretary.

[FR Doc. 02–6703 Filed 3–19–02; 8:45 am]

BILLING CODE 6717–01–P

DEPARTMENT OF ENERGY

Federal Energy Regulatory Commission

[Docket No. EL02–66–000]

Minnesota Municipal Power Agency, Complainant, v. Southern Minnesota Municipal Power Agency, Respondent; Notice of Complaint

March 14, 2002.

Take notice that on March 11, 2002, the Minnesota Municipal Power Agency (the MMPA) filed a Complaint against the Southern Minnesota Municipal Power Agency (SMMPA), for improperly charging the MMPA for losses under SMMPA's Open Access Transmission Tariff.

Pursuant to requirements set forth in 18 CFR 385.206, MMPA has served a copy of the complaint and supporting documents upon SMMPA.

Any person desiring to be heard or to protest this filing should file a motion to intervene or protest with the Federal Energy Regulatory Commission, 888 First Street, NE., Washington, DC 20426, in accordance with Rules 211 and 214 of the Commission's Rules of Practice and Procedure (18 CFR 385.211 and 385.214). All such motions or protests must be filed on or before April 1, 2002. Protests will be considered by the Commission in determining the appropriate action to be taken, but will not serve to make protestants parties to the proceeding. Any person wishing to become a party must file a motion to intervene. Answers to the complaint shall also be due on or before April 1, 2002. Copies of this filing are on file with the Commission and are available for public inspection. This filing may also be viewed on the web at *http://www.ferc.gov* using the ''RIMS'' link, select ''Docket#'' and follow the instructions (call 202–208–2222 for assistance). Comments, protests, interventions and answers may be filed electronically via the Internet in lieu of paper. See, 18 CFR 385.2001(a)(1)(iii) and the instructions on the Commission's web site under the ''e-Filing'' link.

Linwood A. Watson, Jr.,

Deputy Secretary.

[FR Doc. 02–6697 Filed 3–19–02; 8:45 am]

BILLING CODE 6717–01–P

DEPARTMENT OF ENERGY

Federal Energy Regulatory Commission

[Docket No. RP85–60–014]

Overthrust Pipeline Company; Notice of Report of Refunds

March 14, 2002.

Take notice that on March 11, 2002, Overthrust Pipeline Company tendered for filing a refund report. Overthrust states that the report documents refunds of amounts pertaining to and detailing the Deferred Income Tax (DIT) refund payments for the year 2001.

Overthrust states that it is filing the refund report pursuant to a Commission order dated May 21, 1991, ''Order Approving Settlement with Modifications'' in Docket Nos. RP85–60–000 and –002. Overthrust explains that Article V of the settlement, as modified, requires Overthrust to file an annual report 60 days after making the actual DIT refunds.

Any person desiring to protest said filing should file a protest with the Federal Energy Regulatory Commission, 888 First Street, NE, Washington, DC 20426, in accordance with Section 385.211 of the Commission's Rules and Regulations. All such protests must be filed on or before March 21, 2002. Protests will be considered by the Commission in determining the appropriate action to be taken, but will

not serve to make protestants parties to the proceedings. Copies of this filing are on file with the Commission and are available for public inspection. This filing may also be viewed on the web at *http://www.ferc.gov* using the ''RIMS'' link, select ''Docket#'' and follow the instructions (call 202–208–2222 for assistance). Comments, protests and interventions may be filed electronically via the Internet in lieu of paper. See, 18 CFR 385.2001(a)(1)(iii) and the instructions on the Commission's web site under the ''e-Filing'' link.

Linwood A. Watson, Jr.,

Deputy Secretary.

[FR Doc. 02–6700 Filed 3–19–02; 8:45 am]

BILLING CODE 6717–01–P

DEPARTMENT OF ENERGY

Federal Energy Regulatory Commission

[Docket No. CP93–618–013]

PG&E Gas Transmission, Northwest Corporation; Notice of Annual Report

March 14, 2002.

Take notice that on January 28, 2002, PG&E Gas Transmission, Northwest Corporation (GTN) tendered for filing its ''Annual Report on Deferred Revenue Recovery Mechanism and Revenue Reconciliation for the Year Ending October 31, 2001'' for its Medford, Oregon Extension FTS–1 (E–2).

GTN asserts that the purpose of this filing is to comply with the Commission's Order of January 12, 1995 in Docket Nos. CP93–618, *et al.* That Order requires GTN to file an annual report concerning its deferred revenue recovery mechanism and detailing the cost of service for GTN's Medford Extension and the status of its deferred revenue recovery mechanism.

GTN further states that a copy of this filing has been served on GTN's jurisdictional customers and interested state regulatory agencies, as well as the Official Service list compiled by the Secretary in this proceeding.

Any person desiring to be heard or protest said filing should file a motion to intervene or protest with the Federal Energy Regulatory Commission, 888 First Street, NE., Washington, DC 20426, in accordance with sections 385.214 and 385.211 of the Commission's Rules of Practice and Procedure. All such motions or protests must be filed as provided in section 154.210 of the Commission's Regulations. Protests will be considered by the Commission in determining the appropriate action to be taken, but will not serve to make protestants parties to the proceeding. Any person wishing to become a party must file a motion to intervene. Copies of this filing are on file with the Commission and are available for publish inspection in the Public Reference Room.

Linwood A. Watson, Jr.,

Deputy Secretary.

[FR Doc. 02–6694 Filed 3–19–02; 8:45 am]

BILLING CODE 6717–01–P

DEPARTMENT OF ENERGY

Federal Energy Regulatory Commission

[Docket No. RP02–196–000]

Reliant Energy Gas Transmission Company; Notice of Proposed Changes in FERC Gas Tariff

March 14, 2002.

Take notice that on March 8, 2002, Reliant Energy Gas Transmission Company (REGT) tendered for filing as part of its FERC Gas Tariff, Fifth Revised Volume No. 1, the following revised tariff sheets to be effective May 1, 2002:

Ninth Revised Sheet No. 5
Ninth Revised Sheet No. 6
Tenth Revised Sheet No. 7
First Revised Sheet No. 15

REGT states that the purpose of this filing is to adjust REGT's fuel percentages and Electric Power Costs (EPC) Tracker pursuant to Sections 27 and 28 of its General Terms and Conditions.

Any person desiring to be heard or to protest said filing should file a motion to intervene or a protest with the Federal Energy Regulatory Commission, 888 First Street, NE., Washington, DC 20426, in accordance with Sections 385.214 or 385.211 of the Commission's Rules and Regulations. All such motions or protests must be filed in accordance with Section 154.210 of the Commission's Regulations. Protests will be considered by the Commission in determining the appropriate action to be taken, but will not serve to make protestants parties to the proceedings. Any person wishing to become a party must file a motion to intervene. Copies of this filing are on file with the Commission and are available for public inspection. This filing may also be viewed on the web at *http://www.ferc.gov* using the ''RIMS'' link, select ''Docket#'' and follow the instructions (call 202–208–2222 for assistance). Comments, protests and interventions may be filed electronically via the Internet in lieu of paper. See, 18 CFR 385.2001(a)(1)(iii) and the instructions on the Commission's web site under the ''e-Filing'' link.

Linwood A. Watson, Jr.,

Deputy Secretary.

[FR Doc. 02–6704 Filed 3–19–02; 8:45 am]

BILLING CODE 6717–01–P

DEPARTMENT OF ENERGY

Federal Energy Regulatory Commission

[Docket No. RP02–129–002]

Southern LNG Inc.; Notice of Compliance Filing

March 14, 2002.

Take notice that on March 1, 2002, Southern LNG Inc., (Southern) hereby supplements its December 21, 2001 limited Section 4 filing pursuant to the Commission's January 31, 2002 order.[1]

Southern states that the supplements consists of additional information in support of increased costs to recommission and modify the Elba Island liquefied natural gas terminal in Docket Nos. CP99–580.

Southern states that copies of the filing has been served to all customers and interested state commissions.

Any person desiring to protest said filing should file a protest with the Federal Energy Regulatory Commission, 888 First Street, NE, Washington, DC 20426, in accordance with Section 385.211 of the Commission's Rules and Regulations. All such protests must be filed on or before March 21, 2002. Protests will be considered by the Commission in determining the appropriate action to be taken, but will not serve to make protestants parties to the proceedings. Copies of this filing are on file with the Commission and are available for public inspection. This filing may also be viewed on the web at *http://www.ferc.gov* using the ''RIMS'' link, select ''Docket#'' and follow the instructions (call 202–208–2222 for assistance). Comments, protests and interventions may be filed electronically via the Internet in lieu of paper. See, 18 CFR 385.2001(a)(1)(iii) and the instructions on the Commission's web site under the ''e-Filing'' link.

Linwood A. Watson, Jr.,

Deputy Secretary.

[FR Doc. 02–6702 Filed 3–19–02; 8:45 am]

BILLING CODE 6717–01–P

[1] Southern LNG Inc., 98 FERC ¶ 61,088 (2002).

DEPARTMENT OF ENERGY

Federal Energy Regulatory Commission

[Docket No. P–2114–106]

Yakama Nation, Complainant, v. Public Utility District No. 2 of Grant County, Washington, Respondent; Notice of Complaint

March 14, 2002.

Take notice on March 8, 2002, the Yakama Nation (Complainant) filed with the Federal Energy Regulatory Commission (Commission) a document entitled ''Complaint of the Yakama Nation and Request for Fast-Track Processing.'' The Complainant requests, pursuant to 18 CFR 385.206 of the Commission's regulations, that the Commission find Public Utility District No. 2 of Grant County, Washington to be in violation of its license for the Priest Rapids Hydroelectric Project (Project), FERC Project No. 2114, Federal law authorizing the development of the Project, as well as Sections 10, 19, and 20 Federal Power Act due to discriminatory and anticompetitive provisions contained in wholesale power contracts required under the Project license. The Complainant requests that the Commission require the Licensee to correct these violations and to provide remedies designed to alleviate some of the harms that the violations have inflicted on the Yakama Nation.

Any person desiring to be heard or to protest this filing should file a motion to intervene or protest with the Federal Energy Regulatory Commission, 888 First Street, NE., Washington, DC 20426, in accordance with Rules 211 and 214 of the Commission's Rules of Practice and Procedure (18 CFR 385.211 and 385.214). All such motions or protests must be filed on or before March 28, 2002. Protests will be considered by the Commission in determining the appropriate action to be taken, but will not serve to make protestants parties to the proceeding. Any person wishing to become a party must file a motion to intervene. Answers to the complaint shall also be due on or before March 28, 2002. Copies of this filing are on file with the Commission and are available for public inspection. This filing may also be viewed on the web at *http://www.ferc.gov* using the ''RIMS'' link, select ''Docket#'' and follow the instructions (call 202–208–2222 for assistance). Comments, protests, interventions and answers may be filed electronically via the Internet in lieu of paper. See, 18 CFR 385.2001(a)(1)(iii) and the instructions on the Commission's web site under the ''e-Filing'' link.

Linwood A. Watson, Jr.,

Deputy Secretary.

[FR Doc. 02–6698 Filed 3–19–02; 8:45 am]

BILLING CODE 6717–01–P

DEPARTMENT OF ENERGY

Federal Energy Regulatory Commission

[Docket No. EC02–55–000, et al.]

Trans-Elect, Inc., et al.; Electric Rate and Corporate Regulation Filings

March 13, 2002.

Take notice that the following filings have been made with the Commission. Any comments should be submitted in accordance with Standard Paragraph E at the end of this notice.

1. Trans-Elect, Inc., Michigan Transco Holdings, Limited Partnership, Michigan Electric Transmission Company LLC

[Docket No. EC02–55–000]

Take notice that on March 8, 2002, Trans-Elect, Inc. (Trans-Elect) and Michigan Transco Holdings, Limited Partnership (Michigan Transco Holdings LP), on behalf of Michigan Electric Transmission Company (Michigan Transco LLC) (collectively, Trans-Elect Applicants) submitted an application for approval of the transfer of operational control over the jurisdictional transmission facilities to be acquired by Michigan Transco LLC to the Midwest Independent Transmission System Operator, Inc. (Midwest ISO), and for transfer of certain related transmission service agreements to the Midwest ISO.

Copies of this filing were served on all affected state utility commissions.

Comment Date: March 29, 2002.

2. Alliance Companies, et al. and National Grid USA

[Docket No. EL02–65–000]

Take notice that on March 6, 2002, pursuant to Rule 207 of the Federal Energy Regulatory Commission's (Commission) Rules of Practice and Procedure, 18 CFR 385.207, Ameren Services Company (on behalf of Union Electric Company and Central Illinois Public Service Company), American Electric Power Service Corporation (on behalf of Appalachian Power Company, Columbus Southern Power Company, Indiana Michigan Power Company, Kentucky Power Company, Kingsport Power Company, Ohio Power Company, and Wheeling Power Company), The Dayton Power and Light Company, Exelon Corporation (on behalf of Commonwealth Edison Company and Commonwealth Edison Company of Indiana, Inc.), FirstEnergy Corp. (on behalf of American Transmission Systems, Inc., The Cleveland Electric Illuminating Company, Ohio Edison Company, Pennsylvania Power Company, and The Toledo Edison Company), Illinois Power Company, and Northern Indiana Public Service Company (collectively, the Alliance Companies), and National Grid USA, tendered for filing a petition for the Commission to issue an order finding that the proposed policy resolutions contained in the petition provide an appropriate basis for the participation of Alliance GridCo in the Midwest Regional Transmission Organization (RTO).

Alliance GridCo is the Alliance Transmission Company LLC that will be formed with National Grid USA as managing member, provided the Alliance business model can be successfully accommodated within an RTO. Through this petition, the Alliance Companies and National Grid USA attempt to find a way to accommodate Alliance GridCo as a viable transmission business underneath the Midwest ISO umbrella. Should the Commission believe its policy goals would best be served by having Alliance GridCo operate underneath the Midwest ISO umbrella, and the Commission grants the petition, the Alliance Companies and National Grid USA anticipate that Alliance GridCo would be operational by October 1, 2002.

Comment Date: March 28, 2002.

3. Pacific Gas and Electric Company

[Docket No. ER01–833–000]

Take notice that on March 6, 2002 Pacific Gas and Electric Company filed an amendment to its February 28, 2002 filing for Further Request for Deferral of Consideration of the unexecuted Wholesale Distribution Tariff (WDT) Service Agreement and Interconnection Agreement between Pacific Gas and Electric Company and Modesto Irrigation District (MID).

PG&E requests that the Commission defer consideration of the proceedings filed in ER01–833–000 to August 26, 2002, 180 days beyond the last request for Deferral in order that the parties may finalize and executed the Agreements.

Copies of this filing have been served upon MID, the California Independent System Operator Corporation, and the California Public Utilities Commission.

Comment Date: March 27, 2002.

4. Southern California Edison Company

[Docket No. ER02–1286–000]

Take notice that on March 8, 2002, Southern California Edison Company (SCE) tendered for filing a Service Agreement For Wholesale Distribution Service under SCE's Wholesale Distribution Access Tariff, an Interconnection Facilities Agreement, and a Reliability Management System Agreement (Agreements) between SCE and Ridgewood Olinda, LLC (Ridgewood).

SCE respectfully requests the Agreements become effective on March 11, 2002.

These Agreements specify the terms and conditions under which SCE will interconnect Ridgewood's generating facility to its electrical system and provide Distribution Service for up to 2.4 MW of power produced by the generating facility. Copies of this filing were served upon the Public Utilities Commission of the State of California and Ridgewood.

Comment Date: March 29, 2002.

5. Rainy River Energy Corporation-Taconite Harbor

[Docket No. ER02–1258–000]

Take notice that on March 5, 2002, Rainy River Energy Corporation-Taconite Harbor (RR-TH) file with the Federal Energy Regulatory Commission (Commission) a Power Sales Agreement for short term power sales.

Comment Date: March 26, 2002.

6. Generation Power, Inc.

[Docket No. ER02–894–001]

Take notice that on March 7, 2002, Generation Power, Inc. amended its filing of January 30, 2002, which petitioned the Federal Energy Regulatory Commission (Commission) Commission for acceptance of Generation Power Rate Schedule FERC No. 1; the granting of certain blanket approvals, including the authority to sell electricity at market-based rates; and the waiver of certain Commission regulations.

Generation Power intends to engage in wholesale electric power and energy purchases and sales as a marketer. Generation Power is not in the business of generating or transmitting electric power. Generation Power does not have any affiliates as defined at 18 CFR 161.2.

Comment Date: March 28, 2002.

7. American Transmission Company LLC

[Docket No. ER01–1107–002]

Take notice that on March 7, 2002, American Transmission Company LLC (ATCLLC) tendered for filing a refund report in accordance with the Federal Energy Regulatory Commission's January 30, 2002 letter order in the above-referenced proceeding.

Copies of the refund report have been served on parties to the service list, the Public Service Commission of Wisconsin, the Illinois Commerce Commission, and the Michigan Public Service Commission.

Comment Date: March 28, 2002.

8. Conectiv Energy Supply, Inc.

[Docket No. ER00–1770–004]

Take notice that on March 11, 2002, Conectiv Energy Supply, Inc. (CESI) tendered for filing its triennial market power analysis in support of its market-based rate authority in compliance with the Commission's April 25, 2000, order accepting CESI's updated market-based tariff and Code of Conduct. Conectiv Energy Supply, Inc., 91 FERC ¶ 61,076 (2000). In that proceeding, CESI committed to update its market power analysis within three years of March 10, 1999.

Comment Date: April 1, 2002.

9. UGI Development Company

[Docket No. ER99–2817–001]

Take notice that on March 11, 2002, UGI Development Company (UGID) tendered for filing its triennial market power update.

Comment Date: April 1, 2002.

10. Commonwealth Edison Company

[Docket No. ER02–1283–000]

Take notice that on March 8, 2002, Commonwealth Edison Company (ComEd) submitted for filing two Form of Service Agreements for Firm Point-To-Point Transmission Service and the corresponding Network Upgrade Agreements between ComEd and Madison Gas and Electric Company (Madison) and one Form of Service Agreement for Firm Point-To-Point Transmission Service and the corresponding Network Upgrade Agreement between ComEd and MPEX (collectively, Service Agreements) under the terms of ComEd's Open Access Transmission Tariff (OATT).

ComEd requests an effective date of March 5, 2002, and accordingly seeks waiver of the Commission's notice requirements. A copy of this filing was served on Madison and MPEX.

Comment Date: March 29, 2002.

11. Xcel Energy Services, Inc.

[Docket No. ER02–1284–000]

Take notice that on March 11, 2002, Xcel Energy Services, Inc. (XES), on behalf of Northern States Power Company and Northern States Power Company (Wisconsin) (collectively, NSP) submitted for filing a Form of Service Agreement with South Plains Electric Cooperative, Inc. (South Plains), which is in accordance with NSP's Rate Schedule for Market-Based Power Sales (NSP Companies FERC Electric Tariff, Original Volume No. 6). XES requests that this agreement become effective on March 1, 2002.

Comment Date: April 1, 2002.

12. Cinergy Services, Inc.

[Docket No. ER02–1285–000]

Take notice that on March 8, 2002, that Cinergy Services, Inc. (Cinergy) tendered for filing a proposed Notice of Cancellation with Narrative Statement and revisions to Cinergy's Open Access Transmission Tariff (Cinergy OATT), FERC Electric Tariff, Second Revised Volume No. 5.

Cinergy states that its proposed revisions are intended to cancel the Forms of Service Agreement for Firm Point-to-Point Transmission Service, Non-Firm Point-to-Point Transmission Service and Network Transmission Service, as well as certain transmission-related services with respect thereto, which are no longer necessary due to the start-up of Midwest Independent Transmission System Operator, Inc. and its Open Access Transmission Tariff on February 1, 2002.

Cinergy states that it has served copies of its filing by placing a copy of same in the United States mail, first-class postage prepaid, addressed to all customers under the Cinergy OATT.

Comment Date: March 29, 2002.

13. Entergy Services, Inc.

[Docket No. ER02–1287–000]

Take notice that on March 8, 2002, Entergy Services, Inc. (Entergy Services) submitted for filing on behalf of Entergy Arkansas, Inc. (EAI) a 2002 Wholesale Formula Rate Update (Update) in accordance with: (1) The Power Coordination, Interchange and Transmission Service Agreements (PCITA) between EAI and the Cities of Conway, West Memphis and Osceola Arkansas (Arkansas Cities); the cities of Campbell and Thayer, Missouri (Missouri Cities); and the Arkansas Electric Cooperative Corporation (AECC); (2) the Hydroelectric Power Transmission and Distribution Service Agreement between EAI and the City of North Little Rock, Arkansas (North Little Rock); (3) the Transmission Service Agreement (TSA) between EAI and the City of Hope, Arkansas (Hope); (4) the TSA between EAI and the Louisiana Energy & Power Authority (LEPA); (5) the Wholesale Power Service

Agreement (WPSA) between EAI and the City of Prescott, Arkansas (Prescott); and (6) the WPSA between EAI and the Farmers Electric Cooperative Corporation (Farmers). Entergy Services states that the Update redetermines the formula rate charges and the Transmission Loss Factor in accordance with: (1) the above agreements; (2) the 1994 Joint Stipulation between EAI and AECC accepted by the Commission in Docket No. ER95–49–000, as revised by the 24th Amendment to the AECC PCITA on March 26, 1996 in Docket No. ER96–1116; (3) the formula rate revisions accepted by the Commission on February 21, 1995 in Docket No. ER95–393–000, as applicable to the Arkansas Cities, the Missouri Cities, Hope and North Little Rock; (4) the formula rate revisions applicable to LEPA accepted by the Commission on January 10, 1997 in Docket No. ER97–257–000; and (5) the Settlement Agreement accepted by the Commission on July 2, 1999 in Docket No. ER98–2028–000 (the 1998 Formula Rate Update proceeding).

Comment Date: March 29, 2002.

14. PPL Electric Utilities Corporation

[Docket No. ER02–1288–000]

Take notice that on March 8, 2002, PPL Electric Utilities Corporation (PPL Electric Utilities) tendered for filing an Interconnection Agreement between PPL Electric Utilities and the Mt. Carmel Cogen, Inc.

Comment Date: March 29, 2002.

15. Midwest Independent Transmission System Operator, Inc., Trans-Elect, Inc., Michigan Transco Holdings, Limited Partnership and Michigan Electric Transmission Company LLC

[Docket No. ER02–1289–000]

Take notice that on March 8, 2002, the Midwest Independent Transmission System Operator, Inc. (Midwest ISO), and Trans-Elect, Inc. and Michigan Transco Holdings, Limited Partnership, on behalf of Michigan Electric Transmission Company LLC (Michigan Transco LLC) (collectively, Trans-Elect Applicants), filed pursuant to section 205 of the Federal Power Act for Commission approval or acceptance of certain changes to the Midwest ISO's open access transmission tariff (Midwest ISO Tariff) to recognize Michigan Transco LLC's participation as a transmission owner in the Midwest ISO and to establish rates for the Michigan Transco LLC pricing zone. The Midwest ISO and Trans-Elect Applicants also filed a supplemental agreement to establish certain conditions for Michigan Transco LLC's participation in the Midwest ISO.

Copies of this filing were served on all affected state utility commissions and transmission customers, as well as on all members of the Midwest ISO.

Comment Date: March 29, 2002.

16. Central Power and Light Company

[Docket No. ER02–1290–000]

Take notice that on March 8, 2002, Central Power and Light Company (CPL) submitted for filing First Revised Rate Schedule No. 70 with the City of Robstown, Texas (Robstown).

CPL seeks an effective date of April 1, 2002 and, accordingly, seeks waiver of the Commission's notice requirements. CPL states that a copy of this filing has been served on Robstown and the Public Utilities Commission of Texas.

Comment Date: March 29, 2002.

17. Entergy Services, Inc.

[Docket No. ER02–1293-000]

Take notice that on March 8, 2002, Entergy Services, Inc., on behalf of Entergy Arkansas, Inc., Entergy Gulf States, Inc., Entergy Louisiana, Inc., Entergy Mississippi, Inc., and Entergy New Orleans, Inc., (collectively, the Entergy Operating Companies) tendered for filing a Non-Firm Point-To-Point Transmission Service Agreement and a Short-Term Firm Point-To-Point Transmission Service Agreement both between Entergy Services, Inc., as agent for the Entergy Operating Companies, and NRG Power Marketing Inc.

Comment Date: March 29, 2002.

18. Ameren Energy, Inc. on Behalf of Union Electric Company d/b/a AmerenUE and Ameren Energy Generating Company

[Docket No. ER02–1294–000]

Take notice that on March 8, 2002, Ameren Energy, Inc. (Ameren Energy), on behalf of Union Electric Company d/b/a AmerenUE and Ameren Energy Generating Company (collectively, the Ameren Parties), pursuant to section 205 of the Federal Power Act, 16 USC 824d, and the market rate authority granted to the Ameren Parties, submitted for filing umbrella power sales service agreements under the Ameren Parties' market rate authorizations entered into with Williams Energy Marketing & Trading Company.

Ameren Energy seeks Commission acceptance of these service agreements effective February 22, 2002. Copies of this filing were served on the public utilities commissions of Illinois and Missouri and the counterparty.

Comment Date: March 29, 2002.

19. Progress Energy Inc. on Behalf of Progress Ventures, Inc.

[Docket No. ER02–1295–000]

Take notice that on March 8, 2002, Progress Ventures, Inc. (Progress Ventures) tendered for filing an executed Service Agreement between Progress Ventures and the following eligible buyer, Aquila Energy Marketing Corporation. Service to this eligible buyer will be in accordance with the terms and conditions of Progress Ventures Market-Based Rates Tariff, FERC Electric Tariff No. 1.

Progress Ventures requests an effective date of March 6, 2002 for this Service Agreement. Copies of the filing were served upon the North Carolina Utilities Commission, the South Carolina Public Service Commission, the Florida Public Service Commission and the Georgia Public Service Commission.

Comment Date: March 29, 2002.

20. Puget Sound Energy, Inc.

[Docket No. ER02–1296–000]

Take notice that on March 8, 2002, Puget Sound Energy, Inc. (PSE), tendered for filing a Port Townsend Area Transmission Agreement by Public Utility District No. 1 of Clallam County (Clallam), Port Townsend Paper Corporation (Port Townsend Paper), and PSE. A copy of the filing was served upon Clallam and Port Townsend Paper.

Comment Date: March 29, 2002.

Standard Paragraph

E. Any person desiring to be heard or to protest such filing should file a motion to intervene or protest with the Federal Energy Regulatory Commission, 888 First Street, NE., Washington, DC 20426, in accordance with Rules 211 and 214 of the Commission's Rules of Practice and Procedure (18 CFR 385.211 and 385.214). All such motions or protests should be filed on or before the comment date. Protests will be considered by the Commission in determining the appropriate action to be taken, but will not serve to make protestants parties to the proceeding. Any person wishing to become a party must file a motion to intervene. Copies of this filing are on file with the Commission and are available for public inspection. This filing may also be viewed on the web at *http://www.ferc.gov* using the ''RIMS'' link, select ''Docket#'' and follow the instructions (call 202–208–2222 for assistance). Comments, protests and interventions may be filed electronically via the Internet in lieu of paper. See, 18 CFR 385.2001(a)(1)(iii) and the

instructions on the Commission's web site under the ''e-Filing'' link.

Magalie R. Salas,

Secretary.

[FR Doc. 02–6653 Filed 3–19–02; 8:45 am]

BILLING CODE 6717–01–P

DEPARTMENT OF ENERGY

Federal Energy Regulatory Commission

[Docket No. CP01–439–000]

Columbia Gas Transmission Corporation; Notice of Availability of the Environmental Assessment for the Proposed Delaware Valley Energy Expansion Project

March 14, 2002.

The staff of the Federal Energy Regulatory Commission (FERC or Commission) has prepared an environmental assessment (EA) on the natural gas pipeline facilities proposed by Columbia Gas Transmission Corporation (Columbia) in the above referenced docket.

The EA was prepared to satisfy the requirements of the National Environmental Policy Act. The staff concludes that approval of the proposed project, with appropriate mitigating measures, would not constitute a major Federal action significantly affecting the quality of the human environment.

The EA assesses the environmental effects of the construction and operation of the proposed facilities in Chester and Delaware Counties, Pennsylvania and Gloucester, County, New Jersey. These facilities would consist of the abandonment of 8.84 miles of 10-inch-diameter pipeline and 0.30 mile of 14-inch-diameter pipeline and replacement with 24-inch-diameter pipeline in Chester County, Pennsylvania. Columbia would construct 5.10 miles of 20-inch-diameter loop in Delaware County, and 9.62 miles of 20-inch-diameter pipeline and a meter station in Gloucester County, New Jersey. Columbia would also install a 6,000 horsepower compressor at both its existing Eagle and Downingtown Compressor Stations in Chester County, Pennsylvania.

The facilities would supply 165,000 dekatherms per day of gas to the Mantua Creek Power Plant presently under construction in Gloucester County, New Jersey.

The EA has been placed in the public files of the FERC. A limited number of copies of the EA are available for distribution and public inspection at:

Federal Energy Regulatory Commission, Public Reference and Files Maintenance Branch 888 First Street, NE., Room 2A, Washington, DC 20426, (202) 208–1371.

Copies of the EA have been mailed to Federal, state and local agencies, public interest groups, interested individuals, newspapers, and parties to this proceeding.

Any person wishing to comment on the EA may do so. To ensure consideration prior to a Commission decision on the proposal, it is important that we receive your comments before the date specified below. Please carefully follow these instructions to ensure that your comments are received in time and properly recorded:

1. Send two copies of your comments to: Magalie R. Salas, Secretary, Federal Energy Regulatory Commission, 888 First St., N.E., Room 1A, Washington, DC 20426;

2. Label one copy of the comments for the attention of the Gas 1, PJ–11.1;

3. Reference Docket No. CP01–439–000; and

4 Mail your comments so that they will be received in Washington, DC on or before April 12, 2002.

Comments may also be filed electronically via the Internet in lieu of paper. See 18 CFR 385.2001(a)(1)(iii) and the instructions on the Commission's website at *http://www.ferc.fed.us/efi/doorbell.htm* under the link to the User's Guide. Before you can file comments you will need to create an account which can be created by clicking on ''Login to File'' and then ''New User Account''.

Comments will be considered by the Commission but will not serve to make the commentor a party to the proceeding. Any person seeking to become a party to the proceeding must file a motion to intervene pursuant to Rule 214 of the Commission's Rules of Practice and Procedures (18 CFR 385.214).[1] Only intervenors have the right to seek rehearing of the Commission's decision.

Affected landowners and parties with environmental concerns may be granted intervenor status upon showing good cause by stating that they have a clear and direct interest in this proceeding which would not be adequately represented by any other parties. You do not need intervenor status to have your comments considered.

Additional information about the proposed project is available from the Commission's Office of External Affairs at (202) 208–0004 or on the FERC website (www.ferc.fed.us) using the ''RIMS'' link to information in this docket number. Click on the ''RIMS'' link, select ''Docket #'' from the RIMS Menu, and follow the instructions. For assistance with access to RIMS, the RIMS helpline can be reached at (202) 208–2222.

Similarly, the ''CIPS'' link on the FERC Internet website provides access to the texts of formal documents issued by the Commission, such as orders, notices, and rulemakings. From the FERC Internet website, click on the ''CIPS'' link, select

''Docket #'' from the CIPS menu, and follow the instructions. For assistance with access to CIPS, the CIPS helpline can be reached at (202) 208–2474.

Linwood A. Watson, Jr.,

Deputy Secretary.

[FR Doc. 02–6695 Filed 3–19–02; 8:45 am]

BILLING CODE 6717–01–P

[1] Interventions may also be filed electronically via the Internet in lieu of paper. See the previous discussion on filing comments electronically.

DEPARTMENT OF ENERGY

Federal Energy Regulatory Commission

Notice of Application Ready for Environmental Analysis, Soliciting Comments, Recommendations, Terms and Conditions, and Prescriptions

March 14, 2002.

Take notice that the following hydroelectric application has been filed with the Commission and is available for public inspection.

a. *Type of Application:* Amended application for new license.

b. *Project No.:* 1354–005.

c. *Date filed:* July 28, 2001.

d. *Applicant:* Pacific Gas and Electric Company.

e. *Name of Project:* Crane Valley.

f. *Location:* On Willow Creek, North Fork Willow Creek, South Fork Willow Creek, Chilkoot Creek, and Chiquito Creek within the San Joaquin River Basin. The project is in Madera and Fresno counties near the town of Oakhurst, California.

The project includes 738.11 acres of federal lands within the Sierra National Forest.

g. *Filed Pursuant to:* Federal Power Act, 16 U.S.C. 791 (a)–825(r).

h. *Applicant Contact:* Mr. James Holeman (415) 973–6891 or Mr. Nicholas Markevich, 245 Market Street, P.O. Box 770000, San Francisco, CA 94177, (415) 973–5358.

i. *FERC Contact:* Jim Fargo at (202) 219–2848; e-mail *james.fargo@ferc.fed.us*

j. *Deadline for filing comments, recommendations, terms and conditions, and prescriptions:* 60 days from the issuance date of this notice.

All documents (original and eight copies) should be filed with: Magalie R. Salas Secretary, Federal Energy Regulatory Commission, 888 First Street, NE, Washington, DC 20426.

The Commission's Rules of Practice require all intervenors filing documents with the Commission to serve a copy of that document on each person on the official service list for the project. Further, if an intervenor files comments or documents with the Commission relating to the merits of an issue that may affect the responsibilities of a particular resource agency, they must also serve a copy of the document on that resource agency.

Comments, recommendations, terms and conditions, and prescriptions may be filed electronically via the Internet in lieu of paper. See 18 CFR 385.2001(a)(1)(iii) and the instructions on the Commission's web site *(http://www.ferc.gov)* under the ''e-Filing'' link.

k. Status of environmental analysis: This application has been accepted for filing and is now ready for environmental analysis. At this time we do not anticipate the need for preparing a draft EA. We intend to prepare a supplement to the environmental document issued in 1992. The supplemental EA will include our recommendations for operating procedures and environmental enhancement measures that should be part of any new license issued by the Commission. Recipients will have 45 days to provide the Commission with any comments on that document. All comments on the EA, filed with the Commission, will be considered in the licensing decision. However, should substantive comments requiring re-analysis be received on the NEPA document, we would consider preparing a subsequent NEPA document before the licensing decision.

1. The Crane Valley—with 26.7 megawatts (MW) of normal operating capacity—has storage, diversion, water conveyance, and power production facilities.

- The Crane Valley reservoir (Bass Lake) with a maximum storage capacity of 45,410 acre-feet (ac-ft) and Chilkoot reservoir, upstream of Crane Valley, with a maximum capacity of 310 ac-ft
- A small diversion on a tributary to the West Fork Chiquito Creek that brings water to Chilkoot reservoir
- A conveyance system—including three diversion dams, three forebays, one afterbay, and about 14 miles of canals, tunnels and flumes—linking these five powerhouses:

—Crane Valley, with 0.9 MW of normal operating capacity
—San Joaquin No. 3, with 3.4 MW of normal operating capacity
—San Joaquin No. 2, with 3.2 MW of normal operating capacity
—San Joaquin No. 1A, with 0.4 MW of normal operating capacity
—Wishon, with 18.8 MW of normal operating capacity

Historically, the Project produces 123.3 gigawatthours (GWh) of electrical energy annually and has a dependable capacity of 8.4 MW.

m. Locations of the Application: Copies of the application are available for inspection or reproduction at the Commission's Public Reference and Files Maintenance Branch, located at 888 First Street, NE, Washington, D.C. 20426, or by calling (202) 208–2326. The applications may also be viewed on the web at *http://www.ferc.gov* using the ''RIMS'' link-select ''Docket #'' and follow the instructions (call 202–208–2222 for assistance). A copy is also available for inspection and reproduction at the address in item h above.

n. The Commission directs, pursuant to Section 4.34(b) of the Regulations (see Order No. 533 issued May 8, 1991, 56 FR 23108, May 20, 1991) that all comments, recommendations, terms and conditions and prescriptions concerning the application be filed with the Commission within 60 days from the issuance date of this notice. All reply comments must be filed with the Commission within 105 days from the date of this notice.

Anyone may obtain an extension of time for these deadlines from the Commission only upon a showing of good cause or extraordinary circumstances in accordance with 18 CFR 385.2008.

All filings must (1) bear in all capital letters the title ''COMMENTS'', ''REPLY COMMENTS'', ''RECOMMENDATIONS,'' ''TERMS AND CONDITIONS,'' or ''PRESCRIPTIONS;'' (2) set forth in the heading the name of the applicant and the project number of the application to which the filing responds; (3) furnish the name, address, and telephone number of the person submitting the filing; and (4) otherwise comply with the requirements of 18 CFR 385.2001 through 385.2005. All comments, recommendations, terms and conditions or prescriptions must set forth their evidentiary basis and otherwise comply with the requirements of 18 CFR 4.34(b). Agencies may obtain copies of the application directly from the applicant. Each filing must be accompanied by proof of service on all persons listed on the service list prepared by the Commission in this proceeding, in accordance with 18 CFR 4.34(b), and 385.2010.

Linwood A. Watson, Jr.,
Deputy Secretary.

[FR Doc. 02–6699 Filed 3–19–02; 8:45 am]

BILLING CODE 6717–01–P

ENVIRONMENTAL PROTECTION AGENCY

[FRL–7160–6]

Agency Information Collection Activities: Proposed Collection; Comment Request; Hazardous Remediation Waste Management Requirements (HWIR-Media)

AGENCY: Environmental Protection Agency (EPA).

ACTION: Notice.

SUMMARY: In compliance with the Paperwork Reduction Act (44 U.S.C. 3501 *et seq.*), this document announces that EPA is planning to submit the following continuing Information Collection Request (ICR) to the Office of Management and Budget (OMB): ''Hazardous Remediation Waste Management Requirements (HWIR-Media),'' EPA ICR Number 1775.03; OMB Control Number 2050–0161; Expiration Date 06/30/2002. Before submitting the ICR to OMB for review and approval, EPA is soliciting comments on specific aspects of the proposed information collection as described below.

DATES: Comments must be submitted on or before May 20, 2002.

ADDRESSES: Commenters must send an original and two copies of their comments referencing Docket Number F–2002–MH2P–FFFFF to RCRA Docket Information Center, Office of Solid Waste (5305W) United States Environmental Protection Agency, Ariel Rios Building, 1200 Pennsylvania Avenue, NW, Washington, DC, 20460. Hand deliveries of comments should be made to the Arlington, VA address listed below. Comments may also be submitted electronically by sending electronic mail through the Internet to: *rcra-docket@epamail.gov*. Comments in electronic format should also be identified by the Docket Number F–2002–MH2P–FFFFF. All electronic comments must be submitted as an ASCII file avoiding the use of special characters and any form of encryption.

The official record for this action will be kept in paper form. Accordingly, EPA will transfer all comments received electronically into paper form and place them in the official record, which will also include all comments submitted directly in writing. The official record is the paper record maintained in the RCRA Information Center (the RIC address is listed above in this section).

Commenters should not submit any confidential business information (CBI) electronically. An original and two copies of CBI must be submitted under separate cover to: RCRA CBI Document Control Officer, Office of Solid Waste (5303W), United States Environmental Protection Agency, Ariel Rios Building, 1200 Pennsylvania Avenue, NW, Mailcode 5303W, Washington, DC, 20460.

Public comments and supporting materials are available for viewing in the RCRA Information Center (RIC), located at Crystal Gateway, First Floor, 1235 Jefferson Davis Highway, Arlington, Virginia. The RIC is open from 9 a.m. to 4 p.m. Monday through Friday, excluding federal holidays. To review docket materials, it is recommended that the public make an appointment by calling (703) 603–9230. The public may copy a maximum of 100 pages from any regulatory docket at no charge. Additional copies are $0.15/page.

This notice and the supporting documents that detail the Reporting and Record keeping Requirements for the Hazardous Remediation Waste Management Requirements (HWIR-Media) Final Rule ICR are also available.

FOR FURTHER INFORMATION CONTACT: For general information, contact the RCRA Hotline at 800 424–9346 or TDD 800 553–7672 (hearing impaired). In the Washington, DC, metropolitan area, call 703 412–9810 or TDD 703 412–3323.

For more detailed information on specific aspects of this rulemaking contact Mike Fitzpatrick by phone at (703) 308–8411, by facsimile at (703) 308–8609, by mail at the Office of Solid Waste (5303W), United States Environmental Protection Agency, Ariel Rios Building, 1200 Pennsylvania Avenue, NW, Mailcode 5303W, Washington, DC, 20460 or e-mail at *fitzpatrick.mike@epa.gov*.

SUPPLEMENTARY INFORMATION:

Affected entities: Entities potentially affected by this action are those owners or operators of facilities that wish to voluntarily clean up contamination of their site.

Title: ''Hazardous Remediation Waste Management Requirements (HWIR-Media)'' OMB Control No. 2050–0161; EPA ICR No. 1775.03 expiring 06/30/02.

Abstract: All information collection activities required by this rule are authorized by sections 3004 and 3005 of the Solid Waste Disposal Act of 1970, as amended by the Resource Conservation and Recovery Act of 1976 (RCRA), as amended by the Hazardous and Solid Waste Amendments of 1984 (SHWA), 42 U.S.C. 6912(a), 6921, 6924, 6925, 6926, and 6927. EPA believes the information collection for this rule is necessary to balance streamlined regulations of remediation wastes with the Agency's responsibility to protect human health and the environment. The respondents are primarily owners or operators of facilities that wish to voluntarily clean up contamination of their site.

An agency may not conduct or sponsor, and a person is not required to respond to, a collection of information unless it displays a currently valid OMB control number. The OMB control numbers for EPA's regulations are listed in 40 CFR part 9 and 48 CFR Chapter 15.

The EPA would like to solicit comments to:

(i) Evaluate whether the proposed collection of information is necessary for the proper performance of the functions of the agency, including whether the information will have practical utility;

(ii) Evaluate the accuracy of the agency's estimate of the burden of the proposed collection of information, including the validity of the methodology and assumptions used;

(iii) Enhance the quality, utility, and clarity of the information to be collected; and

(iv) Minimize the burden of the collection of information on those who are to respond, including through the use of appropriate automated electronic, mechanical, or other technological collection techniques or other forms of information technology, e.g., permitting electronic submission of responses.

Burden Statement: EPA believes that the previous ICR (ICR Number 1775.02) overestimated the number of respondents reading the regulations, since ICRs need only burden respondents for reading the regulations in association with the collection of information. Given this, the current ICR assumes that 176 respondents will perform the paperwork requirements and hence will read the regulations. This is consistent with all other ICRs in the Office of Solid Waste. For hazardous remediation waste management sites that wish to utilize the flexibility provided by the optional requirements of the HWIR-media Rule, the estimated total annual hour burden for this information collection is 4,959 hours, which is about 29,000 hours lower than the previous ICR's burden estimate. The estimated total annual cost burden for this information collection is $334,886, which includes labor, capital, operations and maintenance, and purchased service costs. The total burden over the three year period of this ICR is estimated to be 14,877 hours and $1,004,658.

EPA estimates that, on average, 30 sites will be subject to the requirements in 40 CFR 264.1(j) and part 270, subpart H (i.e., the requirements for sites with RAPs) over the three-year period of this ICR. Note that this ICR addresses only non-permitted sites under 40 CFR 264.1(j) and part 270, subpart H. A site may conduct cleanup through a RAP, permit, or other specified mechanism. Permitted facilities would obtain a RAP by modifying their permit. These activities are already addressed in ''Part B Permit Application, Permit Modifications, and Special Permits,'' ICR Number 1573. Therefore, this ICR addresses only non-permitted sites under the RAP requirements.

EPA also estimated the number of owners/operators of hazardous remediation waste management sites subject to the 40 CFR 264.554 requirements for staging piles. Based on the Biennial Reporting System (BRS) data, EPA estimates that, currently, there are 87 existing hazardous remediation waste management sites with staging piles. Additionally, EPA estimates that, each year, 59 owners/operators of non-permitted hazardous remediation waste management sites will seek a new staging pile designation.

EPA estimates that 176 owners/operators of hazardous remediation waste management sites (i.e., 30 + 87 + 59 = 176) will be subject to the requirements in this ICR and will, therefore, read the regulations each year.

For owners/operators of hazardous remediation waste management sites subject to the 40 CFR 264.1(j) and part 270, subpart H requirements, the reporting burden is estimated to be 27.33 hours per respondent per year. This hourly burden includes time for preparing and submitting a RAP application, information to modify a RAP, and information to transfer a RAP. The recordkeeping burden is estimated to be 42.13 hours per respondent per year. This hourly burden includes time for reading the regulations and maintaining documentation (e.g., waste analyses results, contingency and emergency plan, file of RAP documents) on site.

For owners/operators of hazardous remediation waste management sites subject to the 40 CFR 264.554 requirements for staging piles, the reporting burden is estimated to be 7.08 hours per year per respondent. This hourly burden includes time for preparing and submitting information for a staging pile designation and documentation supporting a staging pile extension. The recordkeeping burden is estimated to be 12.61 hours per respondent per year. This hourly burden includes time for reading the regulations and complying with the recordkeeping requirements in section 264.554(d)(1)(iii).

Burden means the total time, effort, or financial resources expended by persons to generate, maintain, retain, or disclose or provide information to or for a Federal agency. This includes the time needed to review instructions; develop, acquire, install, and utilize technology and systems for the purposes of collecting, validating, and verifying information, processing and maintaining information, and disclosing and providing information; adjust the existing ways to comply with any previously applicable instructions and requirements; train personnel to be able to respond to a collection of information; search data sources; complete and review the collection of information; and transmit or otherwise disclose the information.

Dated: March 11, 2002.

Elizabeth Cotsworth,

Director, Office of Solid Waste.

[FR Doc. 02–6723 Filed 3–19–02; 8:45 am]

BILLING CODE 6560–50–P

ENVIRONMENTAL PROTECTION AGENCY

[PF–1070; FRL–6824–4]

Notice of Filing a Pesticide Petition to Establish a Tolerance for a Certain Pesticide Chemical in or on Food

AGENCY: Environmental Protection Agency (EPA).

ACTION: Notice.

SUMMARY: This notice announces the initial filing of a pesticide petition proposing the establishment of regulations for residues of a certain pesticide chemical in or on various food commodities.

DATES: Comments, identified by docket control number PF–1070, must be received on or before April 19, 2002.

ADDRESSES: Comments may be submitted by mail, electronically, or in person. Please follow the detailed instructions for each method as provided in Unit I.C. of the **SUPPLEMENTARY INFORMATION**. To ensure proper receipt by EPA, it is imperative that you identify docket control number PF–1070 in the subject line on the first page of your response.

FOR FURTHER INFORMATION CONTACT: By mail: Thomas C. Harris, Registration Division (7505C), Office of Pesticide Programs, Environmental Protection Agency, 1200 Pennsylvania Ave., NW., Washington, DC 20460; telephone number: (703) 308–9423; e-mail address: harris.thomas@epa.gov.

SUPPLEMENTARY INFORMATION:

I. General Information

A. Does this Action Apply to Me?

You may be affected by this action if you are an agricultural producer, food manufacturer or pesticide manufacturer. Potentially affected categories and entities may include, but are not limited to:

Categories	NAICS codes	Examples of potentially affected entities
Industry	111 112 311 32532	Crop production Animal production Food manufacturing Pesticide manufacturing

This listing is not intended to be exhaustive, but rather provides a guide for readers regarding entities likely to be affected by this action. Other types of entities not listed in the table could also be affected. The North American Industrial Classification System (NAICS) codes have been provided to assist you and others in determining whether or not this action might apply to certain entities. If you have questions regarding the applicability of this action to a particular entity, consult the person listed under **FOR FURTHER INFORMATION CONTACT**.

B. How Can I Get Additional Information, Including Copies of this Document and Other Related Documents?

1. *Electronically*. You may obtain electronic copies of this document, and certain other related documents that might be available electronically, from the EPA Internet Home Page at http://www.epa.gov/. To access this document, on the Home Page select ''Laws and Regulations'' and then look up the entry for this document under the ''**Federal Register**—Environmental Documents.'' You can also go directly to the **Federal Register** listings at http://www.epa.gov/fedrgstr/.

2. *In person*. The Agency has established an official record for this action under docket control number PF–1070. The official record consists of the documents specifically referenced in this action, any public comments received during an applicable comment period, and other information related to this action, including any information claimed as confidential business information (CBI). This official record includes the documents that are physically located in the docket, as well as the documents that are referenced in those documents. The public version of the official record does not include any information claimed as CBI. The public version of the official record, which includes printed, paper versions of any electronic comments submitted during an applicable comment period, is available for inspection in the Public Information and Records Integrity Branch (PIRIB), Rm. 119, Crystal Mall #2, 1921 Jefferson Davis Highway, Arlington, VA, from 8:30 a.m. to 4 p.m., Monday through Friday, excluding legal holidays. The PIRIB telephone number is (703) 305–5805.

C. How and to Whom Do I Submit Comments?

You may submit comments through the mail, in person, or electronically. To ensure proper receipt by EPA, it is imperative that you identify docket control number PF–1070 in the subject line on the first page of your response.

1. *By mail*. Submit your comments to: Public Information and Records Integrity Branch (PIRIB), Information Resources and Services Division (7502C), Office of Pesticide Programs (OPP), Environmental Protection Agency, 1200 Pennsylvania Ave., NW., Washington, DC 20460.

2. *In person or by courier*. Deliver your comments to: Public Information and Records Integrity Branch (PIRIB), Information Resources and Services Division (7502C), Office of Pesticide Programs (OPP), Environmental Protection Agency, Rm. 119, Crystal Mall #2, 1921 Jefferson Davis Highway, Arlington, VA. The PIRIB is open from 8:30 a.m. to 4 p.m., Monday through Friday, excluding legal holidays. The PIRIB telephone number is (703) 305–5805.

3. *Electronically*. You may submit your comments electronically by e-mail to: opp-docket@epa.gov, or you can submit a computer disk as described above. Do not submit any information electronically that you consider to be CBI. Avoid the use of special characters

and any form of encryption. Electronic submissions will be accepted in Wordperfect 6.1/8.0 or ASCII file format. All comments in electronic form must be identified by docket control number PF–1070. Electronic comments may also be filed online at many Federal Depository Libraries.

D. How Should I Handle CBI That I Want to Submit to the Agency?

Do not submit any information electronically that you consider to be CBI. You may claim information that you submit to EPA in response to this document as CBI by marking any part or all of that information as CBI. Information so marked will not be disclosed except in accordance with procedures set forth in 40 CFR part 2. In addition to one complete version of the comment that includes any information claimed as CBI, a copy of the comment that does not contain the information claimed as CBI must be submitted for inclusion in the public version of the official record. Information not marked confidential will be included in the public version of the official record without prior notice. If you have any questions about CBI or the procedures for claiming CBI, please consult the person identified under **FOR FURTHER INFORMATION CONTACT**.

E. What Should I Consider as I Prepare My Comments for EPA?

You may find the following suggestions helpful for preparing your comments:

1. Explain your views as clearly as possible.
2. Describe any assumptions that you used.
3. Provide copies of any technical information and/or data you used that support your views.
4. If you estimate potential burden or costs, explain how you arrived at the estimate that you provide.
5. Provide specific examples to illustrate your concerns.
6. Make sure to submit your comments by the deadline in this notice.
7. To ensure proper receipt by EPA, be sure to identify the docket control number assigned to this action in the subject line on the first page of your response. You may also provide the name, date, and **Federal Register** citation.

II. What Action is the Agency Taking?

EPA has received a pesticide petition as follows proposing the establishment and/or amendment of regulations for residues of a certain pesticide chemical in or on various food commodities under section 408 of the Federal Food, Drug, and Cosmetic Act (FFDCA), 21 U.S.C. 346a. EPA has determined that this petition contains data or information regarding the elements set forth in section 408(d)(2); however, EPA has not fully evaluated the sufficiency of the submitted data at this time or whether the data support granting of the petition. Additional data may be needed before EPA rules on the petition.

List of Subjects

Environmental protection, Agricultural commodities, Feed additives, Food additives, Pesticides and pests, Reporting and recordkeeping requirements.

Dated: March 7, 2002.

Peter Caulkins,

Acting Director, Registration Division, Office of Pesticide Programs.

Summary of Petition

The petitioner summary of the pesticide petition is printed below as required by section 408(d)(3) of the FFDCA. The summary of the petition was prepared by Syngenta Crop Protection and represents the view of the petitioner. EPA is publishing the petition summary verbatim without editing it in any way. The petition summary announces the availability of a description of the analytical methods available to EPA for the detection and measurement of the pesticide chemical residues or an explanation of why no such method is needed.

Syngenta Crop Protection

PP 7F4845

EPA has received a pesticide petition (7F4845) from Syngenta Crop Protection, Inc. (formerly Novartis Crop Protection, Inc.), P.O. Box 18300, Greensboro, NC 27419 proposing, pursuant to section 408(d) of FFDCA, 21 U.S.C. 346a(d), to amend 40 CFR part 180 by establishing a tolerance for residues of emamectin benzoate, 4'-epi-methylamino- 4'-deoxyavermectin B_1 benzoate (a mixture of a minimum of 90% 4'-epi- methylamino-4'-deoxyavermectin B_1a, and a maximum of 10% 4'-epi-methlyamino- 4'-deoxyavermectin B_1b benzoate), and its metabolites 8,9 isomer of the B_1a and B_1b component of the parent insecticide in or on the raw agricultural commodities fruiting vegetables (except cucurbits) group at 0.02 parts per million (ppm), brassica leafy vegetables group at 0.025 ppm, turnip, tops at 0.025 ppm, leafy vegetables (except brassica) group at 0.1 ppm, cottonseed at 0.025 ppm, cotton gin byproducts at 0.5 ppm. This notice is an update to a notice of filing originally published on August 29, 1997 (62 FR 45804) (FRL–5738–2). This new notice represents an amendment to the original petition (7F4845) which only included the fruiting vegetables (except cucurbits) group. EPA has determined that the petition contains data or information regarding the elements set forth in section 408(d)(2) of the FFDCA; however, EPA has not fully evaluated the sufficiency of the submitted data at this time or whether the data support granting of the petition. Additional data may be needed before EPA rules on the petition.

A. Residue Chemistry

1. *Plant metabolism.* The metabolism of emamectin benzoate in plants has been studied in lettuce, cabbage, and sweet corn. The major portion of the residue is parent compound and its delta 8,9- photoisomer. The metabolism of emamectin has also been investigated in goats and poultry to characterize the fate of residues that may be present in animal feed items.

2. *Analytical method.* Adequate analytical methods (HPLC-fluorescence methods) are available for enforcement purposes.

3. *Magnitude of residues.* The appropriate number of residue trials have been conducted for cotton, tomatoes, peppers, leaf lettuce, spinach, head lettuce, celery, and mustard greens. These trials were conducted in the major U.S. growing areas for these crops. Processing studies were conducted to provide tomato product, cottonseed hull, meal, and refined oil samples for analysis.

B. Toxicological Profile

A full description of the studies describing the toxicity, animal metabolism, metabolite toxicology, and endocrine disruption of emamectin benzoate can be found in the posting for its first tolerances in the**Federal Register** of May 19, 1999 (64 FR 27192) (FRL–6079–7).

C. Aggregate Exposure

1. *Dietary exposure.* Emamectin benzoate tolerances have been established for head lettuce, celery, and head and stem brassica vegetables. Syngenta assessed chronic exposure by using the mean of the field trial residue values and projected market share values. The acute exposure assessment was performed as a Tier 3, 5000 iteration, Monte Carlo analysis. Actual field trial residue values were utilized along with market share for each crop.

i. *Food.* Chronic dietary exposure to emamectin benzoate is negligible. Exposure calculations made from conservative residue values generated from field trials conducted at maximum application rates and minimum pre-harvest intervals show that chronic exposure is only 1.1% of the population adjusted dose (PAD) for the most sensitive subpopulation (non-black/non-white/non-hispanics). The second most sensitive subpopulation is children (1–6 years old) with an exposure of 1.0% of the chronic PAD. The chronic PAD is based on a no observable adverse effect level (NOAEL) of 0.075 milligrams/kilogram body weight/day (mg/kg bwt/day) based on a 15-day neurotoxicity study in mice and an uncertainty factor of 900. This uncertainty factor is due to a 100–fold safety factor for interspecies and intraspecies variation and an additional 9–fold safety factor for use of a toxicological study of short duration (3x) plus a FQPA safety factor (3x).

Acute exposure for the most sensitive subpopulation is 26.8% of the acute PAD (aPAD) for non-nursing infants <1 year). The exposure to the U.S. population is 16.7% of the aPAD. These exposures were compared to the same toxicological endpoint as described above for the chronic assessment except an uncertainty factor of 300 was assumed (100–fold for interspecies and intraspecies variation and a 3–fold FQPA safety factor.

ii. *Drinking water—a. Chronic exposure.* The estimated maximum concentrations of emamectin benzoate in surface and ground water are 0.00137 parts per billion (ppb) (Day 56 EEC/3 from GENEEC) and 0.00600 ppb (SCI-GROW), respectively. The chronic PAD for emamectin benzoate is 0.000083 mg/kg bwt/day. From the chronic dietary exposure analysis, an exposure estimate of 0.0000006 mg/kg bwt/day was determined for the U.S. population and 0.0000007, 0.0000008, and 0.0000009 mg/kg/day for the females (13+/nursing), children (1–6 years) and non-hispanic/non-white/non-black subgroups, respectively. Based on EPA's ''Interim Guidance for Conducting Drinking Water Exposure and Risk Assessments'' document (December 2, 1997), chronic drinking water levels of comparison (DWLOC) for emamectin benzoate were calculated to be 3 ppb for the U.S. population and 2, 1, 3 ppb for the females (13+/nursing), children (1–6 years), and non-hispanic/non-white/non-black subgroups, respectively. Based on this analysis, emamectin benzoate estimated environmental concentrations (EECs) do not exceed the calculated chronic DWLOCs.

b. *Acute exposure.* The estimated maximum concentrations of emamectin benzoate in surface and ground water are 0.09688 ppb (peak EEC from GENEEC) and 0.00600 ppb (SCI-GROW), respectively. The aPAD for emamectin benzoate is 0.00025 mg/kg bwt/day. From the acute dietary exposure analysis, the highest acute food exposure from the uses of emamectin benzoate was 0.000042 mg/kg/day at the 99.9th percentile for the U.S. population and 0.000058 and 0.000067 mg/kg/day for the children (1–6 years) and non-nursing infants (<1 yr) subgroups, respectively. Using this information, acute DWLOCs for emamectin benzoate were calculated to be 7 ppb for the U.S. population and 2 ppb and 2 ppb for the children (1–6 years), and non-nursing infants (<1 yr) subgroups, respectively. Based on this analysis, emamectin benzoate EECs do not exceed the calculated acute DWLOCs.

2. *Non-dietary exposure.* No products containing emamectin benzoate have yet been registered under the Federal Insecticide, Fungicide, and Rodenticide Act (FIFRA) for any non-food use. No significant non-dietary, non-occupational exposure is anticipated.

D. Cumulative Effects

Emamectin benzoate is synthetically derived from avermectin, which is derived from *Streptomyces avermitilus*, which produces the insecticide avermectin, which is a mixture of two homologs, avermectin B_1a and B_1b, which have equal biological activity. Currently, the only other member of this class that is registered for agricultural uses is abamectin. Abamectin and ivermectin are structurally similar to emamectin. EPA does not have at this time available data to determine whether emamectin benzoate has a common mechanism of toxicity with other substances or how to include this pesticide in a cumulative risk assessment. Unlike other pesticides for which EPA has followed a cumulative risk approach based upon a common mechanism, emamectin benzoate does not appear to produce a toxic metabolite produced by other substances. For the purpose of this tolerance action, therefore, Syngenta has not assumed that emamectin benzoate has a common mechanism of toxicity with these other substances.

E. Safety Determination

1. *U.S. population*—i. *Acute risk.* Exposure to emamectin benzoate residues in food will occupy no more than 16.7% of the aPAD for adult population subgroups and no more than 26.8% of the aPAD for infant/children subgroups. Residue levels used for food-source dietary risk assessments were highly refined and did incorporate percent of crop treated information. Acute dietary exposure estimates were for the 99.9th percentile. Estimated concentrations of emamectin residues in surface and ground water are lower than the DWLOCs. Therefore, Syngenta does not expect acute aggregate risk to emamectin benzoate residues from food and water sources to exceed the level of concern for acute dietary exposure.

ii. *Chronic risk.* The chronic dietary exposure to emamectin residues in food will occupy no more than 0.7% of the chronic RfD for adult population subgroups and no more than 1.0% PAD for children, 1–6 years old, subgroups. Residue levels used for food-source dietary risk assessments were highly refined and did incorporate percent of crop treated information, as indicated above. The estimated concentrations of emamectin residues in surface and ground water are lower than the DWLOCs. The expected chronic aggregate risk to emamectin residues from food and water sources would not be expected to exceed the level of concern for chronic dietary exposure.

2. *Infants and children.* For emamectin benzoate, the Agency has determined the tenfold safety factor for the protection of infants and children should be reduced to 3x. The rationale for reducing the FQPA safety factor is as follows: No increased susceptibility was demonstrated in rats or rabbits following *in utero* and/or postnatal exposure to emamectin. However, increased susceptibility was demonstrated in a developmental neurotoxicity study in rats.

Although, increased susceptibility was demonstrated in a developmental neurotoxicity study in rats, EPA determined that the 10x factor should be reduced to 3x based on the following weight-of-the-evidence considerations in the developmental neurotoxicity study: (1) The lowest observed adverse effect level (LOAEL) was based on a single effect/end point (i.e., decrease in open field motor activity); (2) the effect at the LOAEL was seen only on postnatal day 17 and was not seen either on earlier day 13 or later day 21 evaluations, whereas, at the high dose (3.6/2.5 mg/kg/day), this effect was seen on postnatal days 13 and 17; (3) the effect at the LOAEL was not accompanied with other toxicity whereas, at the high dose tremors and hind limb splay were also seen; (4) the decreased performance was lower only when compared to the concurrent control; and (5) there was limited (only

two studies) historical control data available for comparison.

Syngenta believes the clinical signs of avermectin-family neurotoxicity seen in neonatal rats are unlikely to be useful predictors of human risk. Young rats are considerably more sensitive to avermectin-type compounds than either adult rats or humans and other primates. (In neonatal rats, unlike humans, the P-glycoprotein levels are only a small fraction of the levels seen in adult rats.) Moreover, data from clinical experience with ivermectin, a related human drug, and studies on ivermectin and abamectin, a related pesticide, demonstrate that both the neonatal rat and the CF–1 mouse overpredict the toxicity of the avermectin-type compounds to humans and to non-human primates.

3. *Conclusion.* There is a complete toxicity data base for emamectin benzoate and exposure data are complete or are conservatively estimated based on data that reasonably account for potential exposures. Based on these risk assessments, Syngenta concludes that, there is a reasonable certainty that no harm will result to infants and children from aggregate exposure to emamectin benzoate residues.

F. International Tolerances

No Codex maximum residue levels have been established for residues of emamectin benzoate.

[FR Doc. 02–6615 Filed 3–19–02; 8:45 am]

BILLING CODE 6560–50–S

EXECUTIVE OFFICE OF THE PRESIDENT

Information Collection Activities and Request for Comments

AGENCY: Office of National Drug Control Policy, Executive.

ACTION: Notice.

SUMMARY: The National Youth Anti-Drug Media Campaign is a program within the Office of National Drug Control Policy (ONDCP). To generate anti-drug awareness, the Media Campaign has partnered with the Advertising Council to create an advertising campaign that encourages local community coalitions to engage in drug prevention activities. In addition, the partnership proposes to collect information from interested adults to determine whether public service advertising increases participation in local coalition activities, the usefulness of local public service announcements, and community response to public service announcements. ONDCP invites comments on the (a) information necessary to accurately measure partnership efforts; (b) quality, utility and clarity of the information; (c) methods that minimize the burden of information collection techniques; and (d) accuracy of the estimated burden of information collection.

FOR FURTHER INFORMATION CONTACT: Gem Benoza (202) 395–4625.

Dated: March 13, 2002.

Don Maple,

Media Campaign Deputy Director.

[FR Doc. 02–6716 Filed 3–19–02; 8:45 am]

BILLING CODE 3180–02–U

FEDERAL MARITIME COMMISSION

Notice of Agreement(s) Filed

The Commission hereby gives notice of the filing of the following agreement(s) under the Shipping Act of 1984. Interested parties can review or obtain copies of agreements at the Washington, DC offices of the Commission, 800 North Capitol Street, NW., Room 940. Interested parties may submit comments on an agreement to the Secretary, Federal Maritime Commission, Washington, DC 20573, within 10 days of the date this notice appears in the **Federal Register**.

Agreement No.: 011793.

Title: Maersk Sealand/Great Western Asia-U.S. West Coast Slot Charter Agreement.

Parties: A.P. Moller-Maersk Sealand, Great Western Steamship Company.

Synopsis: Under the proposed agreement, Great Western will charter container slots from Maersk Sealand in the trade between U.S. West Coast ports and ports in Asia. The parties request expedited review.

Agreement No.: 011794.

Title: COSCON/KL/YMUK/Hanjin/Senator Asia & Europe/U.S. Atlantic & Gulf Coast Slot Allocation & Sailing Agreement.

Parties: COSCO Container Lines Company, Limited, Hanjin Shipping Co., Ltd., Kawasaki Kisen Kaisha, Ltd., Senator Lines GmbH, Yangming (UK) Ltd.

Synopsis: Under the proposed agreement, the parties will be selling or exchanging container slots and coordinating their services in the trades between U.S. Atlantic and Gulf ports and ports in Asia, Central America, and Europe.

Agreement No.: 201087–001.

Title: Oakland-International Transportation Marine Terminal Agreement.

Parties: City of Oakland, Board of Port Commissioners, International Transportation Service, Inc.

Synopsis: The proposed amendment foresees the replacement of cranes with resultant changes in the breakpoint level and the minimum annual guarantee as well as a change in the extent of the premises covered by the agreement. The agreement continues to run through June 30, 2003.

Agreement No.: 201131.

Title: NY/NJ-Maher Lease Agreement.

Parties: The Port Authority of New York and New Jersey, Maher Terminals, Inc.

Synopsis: The agreement covers the lease of a marine terminal at the port authority's Elizabeth Marine Terminal. The agreement runs through September 30, 2030.

Agreement No.: 201132.

Title: NY/NJ-Port Newark Container Terminal LLC Lease Agreement.

Parties: The Port Authority of New York and New Jersey, Port Newark Container Terminal LLC.

Synopsis: The agreement covers the lease of a marine terminal at the port authority's Newark Marine Terminal. The agreement runs through November 30, 2030.

Dated: March 15, 2002.

By Order of the Federal Maritime Commission.

Bryant L. VanBrakle,

Secretary.

[FR Doc. 02–6746 Filed 3–19–02; 8:45 am]

BILLING CODE 6730–01–P

FEDERAL MARITIME COMMISSION

Request for Additional Information

The Commission gives notice that it has requested that the parties to the below listed agreement provide additional information pursuant to section 6(d) of the Shipping Act of 1984, 46 U.S.C. app. 1705(d). The Commission has determined that further information is necessary to evaluate the impact of the proposed Reefer Trade Management Program. This action prevents the agreement from becoming effective as originally scheduled.

The Commission also gives notice that it has determined to hold an oral hearing at which interested parties may present information and views on the likely effects of the proposed Reefer Trade Management Program on competition, transportation services, and transportation costs for shippers of refrigerated cargo. The Commission will establish the date, specific issues to be heard, and procedures for this hearing by further notice.

Agreement No.: 011325–027.

Title: Westbound Transpacific Stabilization Agreement.

Parties: American President Lines, Ltd., APL Co. PTE, A.P. Miller-Maersk Sealand, COSCO Container Lines, Evergreen Marine Corporation, Hanjin Shipping Company, Ltd., Hapag-Lloyd Container Linie GmbH, Hyundai Merchant Marine Co., Ltd., Kawasaki Kisen Kaisha, Ltd., Mitsui O.S.K. Lines, Ltd., Nippon Yusen Kaisha, Orient Overseas Container Line Limited, P&O Nedlloyd B.V., P&O Nedlloyd Limited, Yangming Marine Transport Corp.

By Order of the Federal Maritime Commission.

Dated: March 15, 2002.

Bryant L. VanBrakle,

Secretary.

[FR Doc. 02–6744 Filed 3–19–02; 8:45 am]

BILLING CODE 6730–01–P

FEDERAL MARITIME COMMISSION

Ocean Transportation Intermediary License Revocations

The Federal Maritime Commission hereby gives notice that the following Ocean Transportation Intermediary licenses have been revoked pursuant to section 19 of the Shipping Act of 1984 (46 U.S.C. app. 1718) and the regulations of the Commission pertaining to the licensing of Ocean Transportation Intermediaries, effective on the corresponding date shown below:

License Number: 16183N.

Name: AJ International Shipping/ Logistics, Inc.

Address: 4548 Mundy Road, Jacksonville, FL 32207.

Date Revoked: February 6, 2002.

Reason: Failed to maintain valid bond.

License Number: 4088F.

Name: Able Freight Services, Inc.

Address: 5340 W. 104th Street, Los Angeles, CA 90045.

Date Revoked: February 10, 2002.

Reason: Failed to maintain valid bond.

License Number: 4503F

Name: Aimar USA, Inc.

Address: 7500 W. 18th Lane, Hialeah, FL 33014.

Date Revoked: February 11, 2002.

Reason: Failed to maintain a valid bond.

License Number: 3202F.

Name: BWI Transworld Illinois, Inc.

Address: 765 Route 83, Suite 112, Bensenville, IL 60106.

Date Revoked: February 2, 2002.

Reason: Failed to maintain a valid bond.

License Number: 506F.

Name: DBM Logistics, Inc.

Address: 5130 Franklintown Road, Baltimore, MD 21207.

Date Revoked: February 16, 2002.

Reason: Failed to maintain a valid bond.

License Number: 4425F.

Name: Esprit International Shipping Combined Transport, Inc. dba Capital Freight Management.

Address: 701 S. Atlantic Blvd., Suite 200, Monterey Park, CA 91754.

Date Revoked: February 13, 2002.

Reason: Failed to maintain a valid bond.

License Number: 15791N.

Name: Fast Service Inc.

Address: 206 Warren Street, Harrison, NJ 07029.

Date Revoked: February 17, 2002.

Reason: Failed to maintain a valid bond.

License Number: 3968F.

Name: Flamingo Freight Forwarders, Inc.

Address: 9921 NW 80th Avenue, Bay 1–Q, Hialeah Gardens, FL 33016.

Date Revoked: February 22, 2002.

Reason: Failed to maintain a valid bond.

License Number: 17080N.

Name: General Cargo & Logistics.

Address: 4261 182nd Street, Suite J, Torrance, CA 90504.

Date Revoked: February 23, 2002.

Reason: Failed to maintain a valid bond.

License Number: 3886NF.

Name: Goodship International, Inc.

Address: 1058 Tower Lane, Bensenville, IL 60106.

Date Revoked: February 27, 2002.

Reason: Surrendered license voluntarily.

License Number: 16421N.

Name: Korea Express Atlanta, Inc. dba Korea Freight Line, Inc.

Address: 5559 New Peachtree Road, Chamblee, GA 30341.

Date Revoked: February 16, 2002.

Reason: Failed to maintain a valid bond.

License Number: 3217F.

Name: Kremer International Transport, Inc.

Address: 3501 Watson Road, St. Louis, MO 63139.

Date Revoked: February 13, 2002.

Reason: Failed to maintain a valid bond.

License Number: 4547NF.

Name: Millennium Shipping Company.

Address: 4100 East 51st Street, Suite 104, Tulsa, OK 74135.

Date Revoked: February 2, 2002.

Reason: Failed to maintain a valid bond.

License Number: 15292N.

Name: Moon Beam International, Inc.

Address: 2740 Tonawanda Creek Road, Amherst, NY 14228.

Date Revoked: February 13, 2002.

Reason: Failed to maintain a valid bond.

License Number: 1739F.

Name: Ronald D. Stribling dba Ronald D. Stribling Company.

Address: 4110 NE 122nd Avenue, Suite 140, Portland, OR 97230.

Date Revoked: February 13, 2002.

Reason: Failed to maintain a valid bond.

License Number: 13490N.

Name: Sotby Transocean Line, Inc.

Address: 1630 Bath Avenue, Brooklyn, NY 11214.

Date Revoked: January 18, 2002.

Reason: Failed to maintain a valid bond.

License Number: 16655N.

Name: Vayer L.A., Inc.

Address: 11755 Sheldon Street, Sun Valley, CA 91352.

Date Revoked: February 22, 2002.

Reason: Failed to maintain a valid bond.

Ronald D. Murphy,

Deputy Director, Bureau of Consumer Complaints and Licensing.

[FR Doc. 02–6743 Filed 3–19–02; 8:45 am]

BILLING CODE 6730–01–P

FEDERAL MARITIME COMMISSION

Ocean Transportation Intermediary License Reissuances

Notice is hereby given that the following Ocean Transportation Intermediary licenses have been reissued by the Federal Maritime Commission pursuant to section 19 of the Shipping Act of 1984, as amended by the Ocean Shipping Reform Act of 1998 (46 U.S.C. app. 1718) and the regulations of the Commission pertaining to the licensing of Ocean Transportation Intermediaries, 46 CFR 515.

License No.	Name/address	Date reissued
17090N	Inter-Connect Transportation, Inc., 8901 S. La Cienega Blvd., Suite 210, Inglewood, CA 90301.	December 8, 2001.
6313N	Puerto Rico Freight Systems, Inc., P. O. Box 9081, Building 11, International Mercantile Center, Guaynabo P.R. 00908.	October 19, 2001.
4134F	World Exchange, Inc., 8840 Bellanca Avenue, Los Angeles, CA 90045.	August 18, 2001.

Ronald D. Murphy,

Deputy Director, Bureau of Consumer Complaints and Licensing.

[FR Doc. 02–6745 Filed 3–19–02; 8:45 am]

BILLING CODE 6730–01–P

FEDERAL RESERVE SYSTEM

Formations of, Acquisitions by, and Mergers of Bank Holding Companies

The companies listed in this notice have applied to the Board for approval, pursuant to the Bank Holding Company Act of 1956 (12 U.S.C. 1841 *et seq.*) (BHC Act), Regulation Y (12 CFR Part 225), and all other applicable statutes and regulations to become a bank holding company and/or to acquire the assets or the ownership of, control of, or the power to vote shares of a bank or bank holding company and all of the banks and nonbanking companies owned by the bank holding company, including the companies listed below.

The applications listed below, as well as other related filings required by the Board, are available for immediate inspection at the Federal Reserve Bank indicated. The application also will be available for inspection at the offices of the Board of Governors. Interested persons may express their views in writing on the standards enumerated in the BHC Act (12 U.S.C. 1842(c)). If the proposal also involves the acquisition of a nonbanking company, the review also includes whether the acquisition of the nonbanking company complies with the standards in section 4 of the BHC Act (12 U.S.C. 1843). Unless otherwise noted, nonbanking activities will be conducted throughout the United States. Additional information on all bank holding companies may be obtained from the National Information Center website at www.ffiec.gov/nic/.

Unless otherwise noted, comments regarding each of these applications must be received at the Reserve Bank indicated or the offices of the Board of Governors not later than April 12, 2002.

A. Federal Reserve Bank of San Francisco (Maria Villanueva, Consumer Regulation Group) 101 Market Street, San Francisco, California 94105–1579:

1. Plumas Bancorp, Quincy, California; to become a bank holding company by acquiring 100 percent of the voting shares of Plumas Bank, Quincy, California.

Board of Governors of the Federal Reserve System, March 14, 2002.

Robert deV. Frierson,

Deputy Secretary of the Board.

[FR Doc. 02–6637 Filed 3–19–02; 8:45 am]

BILLING CODE 6210–01–S

DEPARTMENT OF HEALTH AND HUMAN SERVICES

Centers for Disease Control and Prevention

[60Day–02–36]

Proposed Data Collections Submitted for Public Comment and Recommendations

In compliance with the requirement of Section 3506(c)(2)(A) of the Paperwork Reduction Act of 1995 for opportunity for public comment on proposed data collection projects, the Centers for Disease Control and Prevention (CDC) will publish periodic summaries of proposed projects. To request more information on the proposed projects or to obtain a copy of the data collection plans and instruments, call the CDC Reports Clearance Officer on (404) 487–1210.

Comments are invited on: (a) Whether the proposed collection of information is necessary for the proper performance of the functions of the agency, including whether the information shall have practical utility; (b) the accuracy of the agency's estimate of the burden of the proposed collection of information; (c) ways to enhance the quality, utility, and clarity of the information to be collected; and (d) ways to minimize the burden of the collection of information on respondents, including through the use of automated collection techniques or other forms of information technology. Send comments to Seleda Perryman, CDC Assistant Reports Clearance Officer, 1600 Clifton Road, MS–D24, Atlanta, GA 30333. Written comments should be received within 60 days of this notice.

Proposed Project: The CDC/ATSDR Educational Loan Repayment Program (ELRP)—New—Office of the Director, Human Resources Management Office, Centers for Disease Control and Prevention and the Agency for Toxic Substances and Disease Registry (CDC/ATSDR).

The Centers for Disease Control and Prevention (CDC) intends to implement an Educational Loan Repayment Program (ELRP) authorized under 42 U.S.C. Sect. 247b-7 as a recruitment and retention incentive for highly qualified health professionals in hard-to-fill positions. The ELRP will be implemented on a pilot basis with up to fifteen (15) loans.

Under the ELRP, a maximum of $35,000 a year (plus 39 per cent of total loan repayment for tax credit as loan repayment benefits represent taxable income) may be repaid toward a participant's outstanding eligible educational debt. The participant is responsible for a loan repayment equal to a total of 10 percent of his/her annual CDC base salary, while the ELRP will repay at a rate of one-third (⅓) of the remaining repayable debt (up to the maximum allowable) for each of the three (3) years. The participant must sign a contract agreeing to remain employed by CDC for a period of not less than three years. Failure to complete the minimum three-year service agreement period will be considered a breach of contract and will subject the ELRP participant to assessment of monetary penalties and damages. Actual loan repayment amounts are based on the proportion of a participant's qualifying debt relative to his/her beginning CDC base salary.

Overall ELRP eligibility requirements:

a. Be a citizen of the United States;

b. Hold a relevant Doctoral degree or equivalent;

c. Have been selected for a vacant position or is currently assigned to a covered hard-to-fill health professional occupational series at CDC/ATSDR; and,

d. Have a qualifying educational debt in excess of 20 percent of their annual CDC base salary.

There are no costs to respondents.

Respondents	Number of respondents	Responses/ respondent	Avg. burden per response (in hrs)	Total burden (in hrs)
Supervisor	15	1	15/60	4
Applicant	15	1	15/60	4
Lender	45	1	30/60	23
Total				31

Dated: March 14, 2002.

Nancy E. Cheal,

Acting Associate Director for Policy, Planning and Evaluation, Centers for Disease Control and Prevention.

[FR Doc. 02–6680 Filed 3–19–02; 8:45 am]

BILLING CODE 4163–18–P

DEPARTMENT OF HEALTH AND HUMAN SERVICES

Centers for Disease Control and Prevention

National Vaccine Advisory Committee/ Vaccine Supply Conference Call

In accordance with section 10(a)(2) of the Federal Advisory Committee Act (Pub. L. 92–463), the Centers for Disease Control and Prevention (CDC) announces the following Federal Advisory Committee meeting.

Name: National Vaccine Advisory Committee (NVAC) Vaccine Supply Conference Call.

Time and Date: 11 a.m.–1 p.m., April 1, 2002.

Place: Audio Conference Call.

Status: This meeting is open to the public, telephone lines are limited. The public can join the meeting by Audio Conference Call by calling (888) 398–1687 and providing the following information:

Pass code: Peter.

Leaders Name: Dr. Georges Peter.

Purpose: This committee advises and makes recommendations to the Director of the National Vaccine Program on matters related to the Program responsibilities.

Matters To Be Discussed: To discuss recommendations from the NVAC Workshop on Strengthening the Vaccine Supply.

Agenda items are subject to change as priorities dictate.

Public comments will be permitted at the end of the NVAC meeting on April 1, 2002.

Contact Person for More Information: Gloria Sagar, Committee Management Specialist, NVPO, CDC, 4770 Buford Highway, M/S K–77, Atlanta, Georgia 30341, telephone (770)488–2040.

The Director, Management Analysis and Services Office, has been delegated the authority to sign **Federal Register** notices pertaining to announcements of meetings and other committee management activities for both the Centers for Disease Control and Prevention and the Agency for Toxic Substances and Disease Registry.

Dated: March 12, 2002.

Alvin Hall,

Acting Director, Management Analysis and Services Office, Centers for Disease Control and Prevention.

[FR Doc. 02–6681 Filed 3–19–02; 8:45 am]

BILLING CODE 4163–18–P

DEPARTMENT OF HEALTH AND HUMAN SERVICES

Centers for Disease Control and Prevention

Proposed Criteria for Selecting New Environmental Chemicals or Categories of Chemicals for Analytic Development and for Inclusion in Future Releases of the National Report on Human Exposure to Environmental Chemicals

AGENCY: Centers for Disease Control and Prevention (CDC), Health and Human Services (HHS).

ACTION: Notice.

SUMMARY: Requests public comment on CDC's proposed criteria for selecting new environmental chemicals or categories of chemicals for analytical method development and for selecting additional environmental chemicals or categories of chemicals to appear in future releases of the ''National Report on Human Exposure to Environmental Chemicals'' (the ''Report''). The proposed criteria for choosing new environmental chemicals or categories of chemicals for analytic development and for including chemicals or categories of chemicals in future editions of the ''Report'' are as follows: (1) Independent scientific data which suggest that the potential for exposure of the U.S. population to a particular chemical is changing or persisting; (2) seriousness of health effects known or suspected to result from exposure to the chemical (for example, cancer and birth defects); (3) the proportion of the U.S. population likely to be exposed to levels of chemicals of known or potential health significance; (4) the need to assess the efficacy of public health actions to reduce exposure to a chemical in the U.S. population or a large component of the U.S. population (for example, in children); (5) the existence of an analytic method that can measure the chemical or its metabolite in blood or urine with adequate accuracy, precision, sensitivity, specificity, and speed; and (6) the incremental analytical cost (in dollars and personnel) to perform the analyses (preference is given to chemicals that can be added readily to existing analytical methods). After reviewing and incorporating public comments from this announcement, CDC will publish the criteria in their final form in the **Federal Register** along with a general notice requesting public nominations of new chemicals that satisfy the new criteria. The criteria will be used by experts to prioritize the nominated chemicals for analytical method development and for eventual inclusion in the ''Report.''

DATES: Submit comments on or before April 19, 2002.

ADDRESSES: Address all comments concerning this notice to Dorothy Sussman, Centers for Disease Control and Prevention, National Center for Environmental Health, Division of Laboratory Sciences, Mail Stop F–20, 4770 Buford Highway, Atlanta, Georgia 30341.

FOR FURTHER INFORMATION CONTACT: Technical Information: Dr. Richard Wang, Telephone 770–488–7950

SUPPLEMENTARY INFORMATION: The ''Report'' provides an ongoing assessment of the exposure of the U.S. population to environmental chemicals using biomonitoring. (The ''Report'' is published by CDC under the authoritities 42 U.S.C. 241 and 42 U.S.C. 242k). For the ''Report,'' an environmental chemical means a chemical compound or chemical element present in air, water, soil, dust, food, or other environmental media. Biomonitoring is the assessment of human exposure to chemicals by measuring the chemicals or their breakdown products in human specimens, such as blood or urine. The ''Report'' provides this exposure information about participants in an ongoing national survey known as the National Health and Nutrition Examination Survey (NHANES). This

survey is conducted by CDC's National Center for Health Statistics; measurements are conducted by CDC's National Center for Environmental Health. The first ''Report,'' published in March 2001, gave information about levels of 27 chemicals found in the U.S. population. The ''Report'' can be obtained at the following: *www.cdc.gov/nceh/dls/report/*'; email *ncehdls@cdc.gov* or Telephone 1–866–670–6052. In addition to those chemicals in the first ''Report,'' the following categories or classes of environmental chemicals will be in the second ''Report:'' polycyclic aromatic hydrocarbons (PAHs), co-planar and non-planar polychlorinated biphenyls (PCBs), persistent organochlorine pesticides, carbamate pesticides, dioxins, and furans.

Future editions of the ''Report'' will provide detailed assessments of exposure levels among different population groups defined by sex, race/ethnicity, age, urban /rural residence, education level, income, and other characteristics. Over time, CDC will be able to track trends in exposure levels. Future editions may also include additional exposure information for special-exposure populations (*e.g.,* children) from studies of people through localized or point sources and from studies of adverse health effects resulting from exposure to varying levels of environmental chemicals.

Dated: March 12, 2002.

Joseph R. Carter,

Associate Director for Management and Operations, Centers for Disease Control and Prevention (CDC).

[FR Doc. 02–6624 Filed 3–19–02; 8:45 am]

BILLING CODE 4163–18–P

DEPARTMENT OF HEALTH AND HUMAN SERVICES

Centers for Medicare and Medicaid Services

[Document Identifier: CMS–R–74]

Agency Information Collection Activities: Proposed Collection; Comment Request

AGENCY: Centers for Medicare and Medicaid Services, HHS.

In compliance with the requirement of section 3506(c)(2)(A) of the Paperwork Reduction Act of 1995, the Centers for Medicare and Medicaid Services (CMS) (formerly known as the Health Care Financing Administration (HCFA)), Department of Health and Human Services, is publishing the following summary of proposed collections for public comment. Interested persons are invited to send comments regarding this burden estimate or any other aspect of this collection of information, including any of the following subjects: (1) The necessity and utility of the proposed information collection for the proper performance of the agency's functions; (2) the accuracy of the estimated burden; (3) ways to enhance the quality, utility, and clarity of the information to be collected; and (4) the use of automated collection techniques or other forms of information technology to minimize the information collection burden.

Type of Information Collection Request: Extension of a currently approved collection.

Title of Information Collection: Income and Eligibility Verification System (IEVS) and Supporting Regulations in 42 CFR 435.940–435.965.

Form No.: CMS–R–74 (OMB# 0938–0467).

Use: Section 1137 of the Social Security Act requires Medicaid State agencies and other federally funded welfare agencies to request income and resource data from certain federal agencies, State wage information collection agencies, and State unemployment compensation agencies through an IEVS. The purpose of the IEVS is to ensure that only eligible individuals receive benefits.

Frequency: Annually.

Affected Public: State, local, or tribal government.

Number of Respondents: 54.

Total Annual Responses: 54.

Total Annual Hours: 131,390.

To obtain copies of the supporting statement and any related forms for the proposed paperwork collections referenced above, access CMS's Web Site address at *http://www.hcfa.gov/regs/prdact95.htm*, or e-mail your request, including your address, phone number, OMB number, and CMS document identifier, to *Paperwork@hcfa.gov*, or call the Reports Clearance Office on (410) 786–1326. Written comments and recommendations for the proposed information collections must be mailed within 60 days of this notice directly to the CMS Paperwork Clearance Officer designated at the following address:

CMS, Office of Information Services, Security and Standards Group, Division of CMS Enterprise Standards, Attention: Julie Brown, CMS–R–74, Room N2–14–26, 7500 Security Boulevard, Baltimore, Maryland 21244–1850.

Dated: March 12, 2002.

John P. Burke, III,

Reports Clearance Officer, Security and Standards Group, Division of CMS Enterprise Standards.

[FR Doc. 02–6751 Filed 3–19–02; 8:45 am]

BILLING CODE 4120–03–P

DEPARTMENT OF HEALTH AND HUMAN SERVICES

Centers for Medicare and Medicaid Services

[Document Identifier: CMS—416]

Agency Information Collection Activities: Proposed Collection; Comment Request

AGENCY: Centers for Medicare and Medicaid Services, HHS.

In compliance with the requirement of section 3506(c)(2)(A) of the Paperwork Reduction Act of 1995, the Centers for Medicare and Medicaid Services (CMS) (formerly known as the Health Care Financing Administration (HCFA)), Department of Health and Human Services, is publishing the following summary of proposed collections for public comment. Interested persons are invited to send comments regarding this burden estimate or any other aspect of this collection of information, including any of the following subjects: (1) The necessity and utility of the proposed information collection for the proper performance of the agency's functions; (2) the accuracy of the estimated burden; (3) ways to enhance the quality, utility, and clarity of the information to be collected; and (4) the use of automated collection techniques or other forms of information technology to minimize the information collection burden.

Type of Information Collection Request: Extension of a currently approved collection.

Title of Information Collection: Annual Early and Periodic Screening, Diagnostic, and Treatment Services (EPSDT) Participation Report and Supporting Regulations in 42 CFR 441.60.

Form No.: CMS–416 (OMB# 0938–0354).

Use: States are required to submit an annual report on the provision of EPSDT services to CMS pursuant to section 1902(a)(43) of the Social Security Act. These reports provide CMS with data necessary to assess the effectiveness of State EPSDT programs. It is also helpful in developing trend patterns, national projections, responding to inquiries, and

determining a State's results in achieving its participation goal.

Frequency: Annually.

Affected Public: State, Local or Tribal Government.

Number of Respondents: 56;

Total Annual Responses: 56.

Total Annual Hours: 1,568.

To obtain copies of the supporting statement and any related forms for the proposed paperwork collections referenced above, access CMS's Web Site address at *http://www.hcfa.gov/regs/prdact95.htm,* or e-mail your request, including your address, phone number, OMB number, and CMS document identifier, to *Paperwork@hcfa.gov,* or call the Reports Clearance Office on (410) 786–1326. Written comments and recommendations for the proposed information collections must be mailed within 60 days of this notice directly to the CMS Paperwork Clearance Officer designated at the following address:

CMS, Office of Information Services, Security and Standards Group, Division of CMS Enterprise Standards, Attention: Julie Brown, CMS–416, Room N2–14–26, 7500 Security Boulevard, Baltimore, Maryland 21244–1850.

Dated: March 12, 2002.

John P. Burke, III,

Reports Clearance Officer, Security and Standards Group, Division of CMS Enterprise Standards.

[FR Doc. 02–6752 Filed 3–19–02; 8:45 am]

BILLING CODE 4120–03–P

DEPARTMENT OF HEALTH AND HUMAN SERVICES

Centers for Medicare and Medicaid Services

[Document Identifier: CMS–1880/1882]

Agency Information Collection Activities: Proposed Collection; Comment Request

AGENCY: Centers for Medicare and Medicaid Services, HHS.

In compliance with the requirement of section 3506(c)(2)(A) of the Paperwork Reduction Act of 1995, the Centers for Medicare and Medicaid Services (CMS) (formerly known as the Health Care Financing Administration (HCFA)), Department of Health and Human Services, is publishing the following summary of proposed collections for public comment. Interested persons are invited to send comments regarding this burden estimate or any other aspect of this collection of information, including any of the following subjects: (1) The necessity and utility of the proposed information collection for the proper performance of the agency's functions; (2) the accuracy of the estimated burden; (3) ways to enhance the quality, utility, and clarity of the information to be collected; and (4) the use of automated collection techniques or other forms of information technology to minimize the information collection burden.

Type of Information Collection Request: Extension of a currently approved collection.

Title of Information Collection: Request for Certification as Supplier of Portable X-ray Services under the Medicare/Medicaid Program for Portable X-ray Survey Report and Supporting Regulations in 42 CFR 486.100—486.110.

Form No.: CMS–1880/1882 (OMB# 0938–0027).

Use: The Medicare program requires portable X-ray suppliers to be surveyed for health and safety standards. The CMS–1880 is used by the surveyor to determine if a portable X-ray applicant meets the eligibility requirements. It also promotes data reduction or introduction, and retrieval from the Online Survey Certification and Reporting (OSCAR) System by the CMS Regional Offices. The CMS–1882 is the survey form that records survey results. The form is primarily a coding work sheet designed to facilitate data reduction and retrieval into the OSCAR system at the CMS Regional Offices.

Frequency: On occasion.

Affected Public: Business or other for profit.

Number of Respondents: 655.

Total Annual Responses: 98.

Total Annual Hours: 172.

To obtain copies of the supporting statement and any related forms for the proposed paperwork collections referenced above, access CMS's Web Site address at *http://www.hcfa.gov/regs/prdact95.htm,* or e-mail your request, including your address, phone number, OMB number, and CMS document identifier, to *Paperwork@hcfa.gov,* or call the Reports Clearance Office on (410) 786–1326. Written comments and recommendations for the proposed information collections must be mailed within 60 days of this notice directly to the CMS Paperwork Clearance Officer designated at the following address:

CMS, Office of Information Services, Security and Standards Group, Division of CMS Enterprise Standards, Attention: Julie Brown, CMS–1880/1882, Room N2–14–26, 7500 Security Boulevard, Baltimore, Maryland 21244–1850.

Dated: March 12, 2002.

John P. Burke, III,

Reports Clearance Officer, Security and Standards Group, Division of CMS Enterprise Standards.

[FR Doc. 02–6753 Filed 3–19–02; 8:45 am]

BILLING CODE 4120–03–P

DEPARTMENT OF HEALTH AND HUMAN SERVICES

Centers for Medicare and Medicaid Services

[Document Identifier: CMS–R–299]

Agency Information Collection Activities: Proposed Collection; Comment Request

AGENCY: Centers for Medicare and Medicaid Services, HHS.

In compliance with the requirement of section 3506(c)(2)(A) of the Paperwork Reduction Act of 1995, the Centers for Medicare and Medicaid Services (CMS) (formerly known as the Health Care Financing Administration (HCFA)), Department of Health and Human Services, is publishing the following summary of proposed collections for public comment. Interested persons are invited to send comments regarding this burden estimate or any other aspect of this collection of information, including any of the following subjects: (1) The necessity and utility of the proposed information collection for the proper performance of the agency's functions; (2) the accuracy of the estimated burden; (3) ways to enhance the quality, utility, and clarity of the information to be collected; and (4) the use of automated collection techniques or other forms of information technology to minimize the information collection burden.

Type of Information Collection Request: Revision of a currently approved collection.

Title of Information Collection: A Project to Develop an Outcome-Based Continuous Quality Improvement System and Core Outcome and Comprehensive Assessment Data Set for PACE.

Form No.: CMS–R–299CMS—(OMB# 0938–0791).

Use: The purpose of this project is to develop an outcome-based continuous quality improvement (OBCQI) system and core comprehensive assessment data set for the PACE program by (a) developing and testing a set of data items for core outcome and comprehensive assessment (COCOA), (b) testing risk-adjustment methods so each site's outcomes can be

appropriately evaluated, (c) designing an OBCQI approach to improve quality in a systematic, evolutionary manner, and (d) testing the usefulness of the data items for assessment and care planning. A three-phase field test will result in the refinement of the draft COCOA data items and protocols as needed. Findings from the project are intended to guide the possible implementation of a national approach for OBCQI and core comprehensive assessment for PACE.

Frequency: On Occasion.

Affected Public: Not-for-profit institutions and individuals or households.

Number of Respondents: 8,298.

Total Annual Responses: 90,070.

Total Annual Hours: 22,503.77.

To obtain copies of the supporting statement and any related forms for the proposed paperwork collections referenced above, access CMS's Web Site address at *http://www.hcfa.gov/regs/prdact95.htm,* or e-mail your request, including your address, phone number, OMB number, and CMS document identifier, to *Paperwork@hcfa.gov,* or call the Reports Clearance Office on (410) 786–1326. Written comments and recommendations for the proposed information collections must be mailed within 60 days of this notice directly to the CMS Paperwork Clearance Officer designated at the following address: CMS, Office of Information Services, Security and Standards Group, Division of CMS Enterprise Standards, Attention: Melissa Musotto, Room N2–14–26, 7500 Security Boulevard, Baltimore, Maryland 21244–1850.

Dated: March 12, 2002.

John P. Burke, III,

Reports Clearance Officer, Security and Standards Group, Division of CMS Enterprise Standards.

[FR Doc. 02–6756 Filed 3–19–02; 8:45 am]

BILLING CODE 4120–03–P

DEPARTMENT OF HEALTH AND HUMAN SERVICES

Food and Drug Administration

[Docket No. 00D–1542]

Draft Guidance for Industry on Electronic Records; Electronic Signatures, Time Stamps; Availability

AGENCY: Food and Drug Administration, HHS.

ACTION: Notice.

SUMMARY: The Food and Drug Administration (FDA) is announcing the availability of a draft guidance for industry entitled ''Guidance for Industry, 21 CFR Part 11; Electronic Records; Electronic Signatures, Time Stamps.'' The draft guidance describes the agency's current thinking on issues pertaining to the use of computer generated time stamps in computer systems subject to part 11 (21 CFR part 11) requirements, to ensure that electronic records and electronic signatures are trustworthy, reliable, and compatible with FDA's public health responsibilities. The use of the computer generated time stamps is a requirement of part 11 of title 21 of the Code of Federal Regulations.

DATES: Submit written or electronic comments on the draft guidance by June 18, 2002. General comments on agency guidance documents are welcome at any time.

ADDRESSES: Submit written requests for single copies of the draft guidance to the Division of Compliance Information and Quality Assurance (HFC–240), Office of Enforcement, 5600 Fishers Lane, Rockville, MD 20857. Send one self-addressed adhesive label to assist that office in processing your requests. Submit written comments on the draft guidance document to the Dockets Management Branch (HFA–305), Food and Drug Administration, 5630 Fishers Lane, rm. 1060, Rockville, MD 20852. Submit electronic comments to http://www.fda.gov/dockets/ecomments. See the **SUPPLEMENTARY INFORMATION** section for electronic access to the draft guidance document.

FOR FURTHER INFORMATION CONTACT: Paul J. Motise, Office of Enforcement (HFC–240), Food and Drug Administration, 5600 Fishers Lane, Rockville, MD 20857, 301–827–0383, e-mail: pmotise@ora.fda.gov.

SUPPLEMENTARY INFORMATION:

I. Background

FDA is announcing the availability of a draft guidance entitled ''Guidance for Industry, 21 CFR Part 11; Electronic Records; Electronic Signatures, Time Stamps.'' In the **Federal Register** of March 20, 1997 (62 FR 13430), FDA published a regulation providing criteria under which the agency considers electronic records and electronic signatures to be trustworthy, reliable, and generally equivalent to paper records and handwritten signatures executed on paper (part 11). The preamble to part 11 stated that the agency anticipated issuing supplemental guidance documents and would afford all interested parties the opportunity to comment on draft guidance documents.

The draft guidance addresses issues pertaining to computer generated time stamps in computer systems used to create, modify, maintain, archive, retrieve, or transmit electronic records and electronic signatures subject to part 11. Part 11 requires persons subject to the regulation to implement time stamps in audit trails and signature manifestations, and the draft guidance is intended to assist people who must meet this requirement; it may also assist FDA staff who apply part 11 to persons subject to the regulation.

The draft guidance provides specific information on key principles and practices, and it addresses some frequently asked questions. However, it is not intended to cover every aspect of time stamps.

This level 1 draft guidance is being issued consistent with FDA's good guidance practices regulation (21 CFR 10.115). This draft guidance, when finalized, will represent the agency's current thinking on computer generated time stamps used in computer systems subject to part 11. It does not create or confer any rights for or on any person and does not operate to bind FDA or the public. An alternative approach may be used if such approach satisfies the requirements of the applicable statutes and regulations.

II. Comments

Interested persons may submit to the Dockets Management Branch (address above) written or electronic comments on the draft guidance. Two copies of any comments are to be submitted, except that individuals may submit one copy. Comments are to be identified with the docket number found in brackets in the heading of this document. A copy of the draft guidance and received comments are available for public examination in the Dockets Management Branch between 9 a.m. and 4 p.m., Monday through Friday.

III. Electronic Access

Persons with access to the Internet may obtain the document at http://www.fda.gov/ora/compliance_ref/Part11/default.htm.

Dated: March 12, 2002.

Margaret M. Dotzel,

Associate Commissioner for Policy.

[FR Doc. 02–6623 Filed 3–19–02; 8:45 am]

BILLING CODE 4160–01–S

DEPARTMENT OF HEALTH AND HUMAN SERVICES

Health Resources and Services Administration

Availability of Funds for Grants for the Community Access Program

AGENCY: Health Resources and Services Administration, HHS.

ACTION: Notice of availability of funds.

SUMMARY: The Health Resources and Services Administration (HRSA) announces the availability of funding to assist communities and their safety net providers in developing integrated health care delivery systems that serve the uninsured and underinsured with greater efficiency and improved quality of care. This funding is part of the $105 million appropriated for the Community Access Program (CAP) under the fiscal year 2002 Health and Human Services Appropriations Act. Up to $20 million will be available as 1-year CAP grants with the possibility of supplemental funding depending on performance and funding availability. Current annual awards to communities average about $900,000 per award, and range from approximately $150,000 to $1.2 million. Applicants are encouraged to propose total budgets in this range.

The purpose of this program is to assist communities and consortia of health care providers, faith-based organizations and others to support the infrastructure necessary to fully develop or strengthen integrated health systems of care that coordinate health services for the uninsured and underinsured. The goals are to increase access to care, generate system-wide efficiency and cost savings, and improve health in targeted populations. The coordination of services through the CAP grant will allow the uninsured and underinsured to receive more efficient and higher quality care and gain entry into a comprehensive system of care. The system will be characterized by effective collaboration, information sharing, and clinical and financial coordination among all levels of care in the community network.

DATES: The timeline for application submission, review and award is as follows:

Application kits and additional guidance are available through the HRSA Grants Application Center (GAC).

May 7, 2002—Applications due.
June–2002—Applications reviewed.
July–August—Site visits to selected applicants.
September 2002—Grant awards announced.

ADDRESSES: To receive a complete application kit (i.e., application instructions, necessary forms, and application review criteria), contact the HRSA GAC at:

Health Resources and Services Administration Grants Application Center COMMUNITY ACCESS PROGRAM: CFDA #93.252, 901 Russell Avenue, Suite 450, Gaithersburg, MD 20879, Phone: 1–877—HRSA–123, Fax: 1–877–HRSA–345. E-mail: *hrsagac@hrsa.gov*.

FOR FURTHER INFORMATION CONTACT: Community Access Program Office, Health Resources and Services Administration, 4350 East West Highway, 3rd Floor, Bethesda, Maryland 20854, Phone: 301–443–0536, Fax: 301–443–0248. E-mail: *capcentral@hrsa.gov*.

SUPPLEMENTARY INFORMATION:

Program Description

The program has been in existence since FY 2000 with 136 projects funded to date. Many communities supported by earlier grants have already taken action to meet the health needs of all their residents. There are many exciting, dynamic models. Each of the existing CAP communities has created a project that addresses its own needs. We are interested in funding new communities that plan to generate better health for more people at less cost.

There is no one successful model that we are trying to replicate. Some successful communities:

- Have a project design that builds on its current capacities and strengths.
- Build coalitions that include the major players in the political and health delivery systems.
- Use Federal funds to plan a transition to an expanded approach that will be competitive within its own market.
- Have a plan for sustainability after Federal funds expire.
- Have a coalition that works with its county board, city council, State legislature and State health programs to ensure coordination and efficient use of all available resources.

CAP requires a coalition/collaboration of partners that includes primary, secondary and preventive care. The coalition/collaboration should include the providers of safety net services who currently serve the community. Many existing CAP coalitions have:

- Coordinated the provision of care through public hospitals, public health departments, and Federally Qualified Health Centers and existing other federally funded programs like Healthy Start and Ryan White;
- Included a strong linkage with social service organizations and faith-based programs.
- Linked hospital and clinic services using state of the art information technology.
- Developed management systems that allow transitions between Medicaid, uninsured, and insured status for low income populations to reduce administrative burden on providers.
- Created networks to ensure a primary care home for uninsured persons and distributed the caseloads among all providers.
- Linked mental health and substance abuse services to primary care.
- Ensured partnership with the local business community.
- Addressed service gaps by expanding health centers.

Although there are many models emerging, these are not really common characteristics but are ''issues frequently addressed.'' They are:

- Common enrollment systems.
- Standardized financial eligibility.
- Agreement about sliding fee scales.
- Coordination of services among providers.
- Ensured primary care or medical homes.
- Provision of specialty services.
- Automated appointment systems.
- Case management services.
- Strategies for affordable pharmaceutical services.
- Disease management programs across the array of community providers.
- Outreach to hard-to-enroll populations.
- Information systems to implement the desired strategies.
- Included use of local taxing authorities and redirected funds within the system to provide for sustainability.

These communities are demonstrating that these changes are possible and they are reporting the results of their efforts across the Nation. They are communities with clear goals, an operational plan for meeting these goals, a history of commitment to serving indigent populations, and a track record to indicate a reasonable chance of success.

Eligible Applicants

To encourage the development of different models, this program seeks a variety of applicants representing all types of communities. Applicants who receive funding may be large health care systems or small organizations. Applications are encouraged from urban areas, rural communities, tribal organizations, and faith-based communities.

Applications may be submitted by public and private non-profit entities that demonstrate a commitment to and experience with providing a coordinated continuum of care to uninsured individuals. Each applicant must represent a community-wide coalition that is committed to the project and includes safety net providers (where they exist) who have traditionally provided care to the community's uninsured and underinsured regardless of ability to pay. The community-wide coalition must consist of partners from all levels of care and partners who represent a range of services (*e.g.,* mental health and substance abuse treatment, maternal and child health care, oral health, HIV/AIDS care) to a wide variety of populations. Coalitions are encouraged to include partners from private industry, faith-based organizations, and other organizations within communities.

Examples of eligible applicants which may apply on behalf of the community-wide coalition include, but are not limited to:

- A consortium or network of providers (*e.g.*, public and charitable hospitals; community, migrant, homeless, public housing, and school-based health centers; rural health clinics; free health clinics; teaching hospitals and academic institutions).
- Local government agencies (*e.g.*, local public health departments with service delivery components).
- Tribal governments.
- Managed care plans or other payers (*e.g.*, HMOs).
- Agencies of State government, multi-State health systems, or other groups may submit applications on behalf of multiple communities if they demonstrate the ability to coordinate community health care delivery systems and bring resources to the community.

Existing CAP grantees are not eligible to apply for this funding.

Application Review and Funding Criteria

Each of the applications that has passed an eligibility and conformance review by Federal staff will be assigned to members of an Objective Review Committee (ORC) for review. Members of the ORC will use the following evaluation criteria in their review of applications:

1. *Community Needs Assessment*—Evidence that the target population has significant need (20 Points).
2. *Business Plan to Produce Defined Results*—Clarity and scope of projected results in terms of increased access to culturally competent care and/or health status for the target population, and alignment of these projected results with organizational capacity, a clear and accountable set of activities, operational plan and budget (30 Points).
3. *Service Integration Strategy & Readiness*—Integration of appropriate health and other services across the community of providers and organizations, readiness, evidence of progress towards developing an integrated system of care for the target population, and scope and quality of services (25 Points).
4. *Sustainability*—Demonstration of existing and sustainable public or private funding sources or cost-savings to be generated and reinvested in the system of care (15 Points).
5. *Evaluation*—Robust self-evaluation plan, specific performance measures, and strong commitment to participation in a national evaluation (10 Points).

A Validation Site Visit will be conducted prior to final award decisions of those applicants recommended by the ORC for funding. Site visits are expected to occur in the July/August timeframe.

Use of Grant Funds

Funding provided through this program may NOT be used to substitute for or duplicate funds currently supporting similar activities. Grant funds may support costs such as:

- Project staff salaries.
- Consultant support.
- Management information systems (*e.g.,* hardware and software).
- Project-related travel.
- Replication activities and travel to support peer-to-peer learning communities.
- Other direct expenses necessary for the integration of administrative, clinical, information system, or financial functions.
- Program evaluation activities.
- Case management and disease management activities that are not reimbursable services.

With appropriate justification on why funds are needed to support the following costs, up to a total of 15 percent in total of grant funds applied for may be used for any combination of the following:

- Alteration or renovation of facilities.
- Primary care site development.
- Service expansions or direct patient care.

(Direct patient care is defined as provision of services or supplies that are ordinarily reimbursable, *e.g.,* exams, therapy sessions, pharmaceuticals.)

- Capital equipment used for reimbursable services (e.g., radiology equipment, ambulances).

Grant funds may NOT be used for:

- Construction.
- Reserve requirements for state insurance licensure.

Expected Results

The integration and coordination of services among a community's safety net providers are expected to result in:

- Increased access to culturally competent care in terms of measures such as: numbers of vulnerable people served, the scope and continuity of provided services, the number of new access points such as health center expansions or new sites, and other;
- Improved health status in the target population;
- A sustainable system that provides coordinated care to the target population; and,
- Elimination of unnecessary, duplicate functions in service delivery and administrative functions, resulting in cost savings to reinvest in the system.

Dated: March 12, 2002.

Elizabeth M. Duke,

Administrator.

[FR Doc. 02–6707 Filed 3–19–02; 8:45 am]

BILLING CODE 4165–15–P

DEPARTMENT OF THE INTERIOR

Fish and Wildlife Service

Notice of Intent To Issue a Final Comprehensive Conservation Plan, Associated Environmental Assessment, and Finding of No Significant Impact for Balcones Canyonlands National Wildlife Refuge in the Southwest Region

AGENCY: Fish and Wildlife Service, Interior.

ACTION: Notice.

SUMMARY: This notice advises the public that the U.S. Fish and Wildlife Service (Service) has prepared a Final Comprehensive Conservation Plan (CCP), associated Environmental Assessment (EA), and a Finding of No Significant Impact (FONSI) for the Balcones Canyonlands National Wildlife Refuge, north of Austin, Texas, pursuant to the National Wildlife Refuge System Improvement Act of 1997, and National Environmental Policy Act of 1969, and its implementing regulations. The Regional Director, Southwest Regional Office, upon issuing a FONSI, considered a reasonable range of management framework alternatives, and has selected Alternative 2, found in the EA, to be the Service's proposed alternative.

Approval of the Balcones Canyonlands NWR CCP formalizes 8 goals which will result in:

- Restoration and enhancement of threatened and endangered species habitat on Refuge lands. (Goal 1)
- Protection and enhancement of habitat for a diversity of wildlife including other migratory birds. (Goal 2)
- Restoration of watershed health to minimize sheet runoff and siltation, enhance seasonal stream flow, and maximize ground and surface water recharge. (Goal 3)
- Development of interpretive programs that enable the public to (1) enjoy the fish and wildlife resources found on the refuge, (2) understand these resources and issues related to them, and (3) act to promote fish and wildlife conservation. (Goal 4)
- Protection of habitat within approved Refuge boundaries by fee acquisition or conservation easement. (Goal 5)
- Accurate, up-to-date data on roads, other physical infrastructure, habitats and wildlife, and plant species.(Goal 6)
- Compliance with historic and archeological resource protection laws and regulations. (Goal 7)
- Efficient Administration that Supports Refuge Objectives Accomplishments. (Goal 8)

Some of the specific changes to the existing program changes include but are not necessarily limited to the following objectives:

- Restore and enhance 500 acres of black-capped vireo habitat within 10 years.
- Maintain brown-headed cowbirds parasitism on black-capped vireo nests below 10%.
- Protect existing golden-cheeked warbler habitat on Refuge lands and enhance additional areas for golden-cheeked warbler where appropriate.
- Within five years design and begin to implement a plan to locate and map caves and other karst features, monitor changes occurring in them, and take actions as needed to protect them.
- Continue to support and promote the conservation of the golden-cheeked warbler and black-capped vireo in their migration and wintering areas through coordination with Central American ornithologists and participation in the Nature Conservancy's International Program.
- Within 10 years restore and manage at least 1,000 acres of existing and former native grassland and savannah habitat on the Refuge and increase the amount and diversity of native annual and perennial grasses and forbs on the refuge.
- Within ten years, design and implement a plan to restore wetlands and riparian corridors.
- Within ten years rehabilitate and improve existing wells for wildlife water sources for public viewing sites using wind and solar power.
- Control invasive species (e.g. second-growth juniper, prickly pear and false-willow) on at least 50 acres per year to improve ground cover and plant diversity.
- Reduce the Refuge white-tailed deer herd to achieve and maintain a density of one deer per 20 or more acres within five years to reduce adverse effects on Refuge habitat.
- Maintain and increase herbarium collection and print a Refuge Plant list within three years. Identify native plant and wildlife species that are unique to the Balcones Canyonlands region for potential restoration and enhancement on the Refuge.
- Control feral, exotic and domestic animals that can compete with native wildlife and damage its habitat (e.g. dogs, cats, feral hogs, emu, etc.). Complete hog control plan within three years.
- Restore native plant growth on eroded and disturbed sites to increase water holding capacity of the soils. Restore 50 acres per year.
- Through increasing visitation to 5,000 visitors per year, provide public opportunities to view and learn about Refuge wildlife species and representative habitat characteristics of the Texas Hill Country, and to promote a conservation ethic.
- Provide compatible wildlife dependent outdoor recreational opportunities for the public on the Refuge to include wildlife viewing access, while striving for a balance between conflicting user groups. Annually evaluate hunting program to include newly acquired tracts.
- Within five years develop a public outreach program to aid in the understanding of Refuge purposes, issues specific to Balcones Canyonlands National Wildlife Refuge.
- Within five years develop a public outreach program to aid in the understanding of Refuge purposes, issues specific to Balcones Canyonlands National Wildlife Refuge.
- Within five years design and implement Partnership and Volunteer programs to facilitate meeting Refuge management objectives.
- Improve five miles of public or administrative roads per year to improve access to the Refuge for public and administrative use.
- Annually review and update the land protection plan priorities. Acquire lands according to revised priorities.
- Meet with five private owners of lands within the Refuge per year to exchange information and provide assistance on management of wildlife populations and endangered species habitat.
- Within five years map roads, inspect ponds, map and monitor Refuge habitats and species distributions.
- Within three years, create and maintain a database of Refuge biological resources for use in making management decisions and documenting changes in habitat and wildlife composition.
- Maintain files on all archeological and cultural resource sites. Annually inspect all sites and record condition.
- Within three years complete plans for implementation of objectives and strategies in this comprehensive conservation plan.
- Within five years increase Refuge staff to meet minimal needs for implementation of Refuge objectives and strategies identified in this comprehensive conservation plan.
- Conduct, encourage and support research and management studies that will increase scientific data available for use in making Refuge management decisions.
- Within five years obtain adequate equipment and storage facilities to implement management strategies to meet objectives identified in this management plan.
- Within five years plan acquisition, remodeling and/or construction of a permanent Refuge Office and Visitor Contact Station to be located on Refuge lands.

The implementation of the above management approaches among others and employment of strategies associated with those approaches should assist in the achievement of the refuge's broad goals.

Based on a review and evaluation of the information contained in the CCP and EA for the Balcones Canyonlands National Wildlife Refuge, the Regional Director, Southwest Region, U.S. Fish and Wildlife Service, has selected Alternative 2 detailed in the EA. Consequently the Regional Director has determined that the approval of the individual or cumulative approaches reflected in Alternative 2 the Proposed Alternative and CCP Goals, Objectives and Strategies, is not deemed to constitute a major Federal action which would significantly affect the quality of the human environment within the meaning of Section 102(2) (c) of the National Environmental Policy Act

(NEPA). Therefore, an Environmental Impact Statement is not required. However, it is the intent of the Service to revisit questions of potential significant environmental consequences in accordance with NEPA upon consideration of the implementation of site specific proposals called for and discussed in the final plan document.

ADDRESSES: A paper copy and/or a Compact Disk copy may be obtained by writing to: Mr. John Slown, Natural Resource Planner, Division of Refuges, U.S. Fish and Wildlife Service, P.O. Box 1306, Albuquerque, NM 87103–1306.

SUPPLEMENTARY INFORMATION: It is Service policy to have all lands within the National Wildlife Refuge System managed in accordance with an approved CCP. The CCP guides management decisions and identifies refuge goals, long-range objectives, and strategies for achieving refuge purposes. The planning process has considered many elements, including habitat and wildlife management, habitat protection and acquisition, public and recreational uses, and cultural resources. Public input into this planning process has assisted in the development of these documents. The CCP will provide other agencies and the public with a clear understanding of the desired conditions for the Refuges and how the Service will implement management strategies.

The Service considered comments and advice generated in response to draft documents issued in November 1998. The Service is furnishing this notice in compliance with Service CCP policy to advise other agencies and the public of the availability of the final documents.

Dated: March 8, 2002.

Geoffrey L. Haskett,

Acting Regional Director.

[FR Doc. 02–6768 Filed 3–19–02; 8:45 am]

BILLING CODE 4310–55–P

DEPARTMENT OF THE INTERIOR

Fish and Wildlife Service

Receipt of Applications for Permit

AGENCY: Fish and Wildlife Service, Interior.

ACTION: Notice of receipt of applications for permit.

SUMMARY: The public is invited to comment on the following applications to conduct certain activities with endangered species and/or marine mammals.

DATES: Written data, comments or requests must be received by April 19, 2002.

ADDRESSES: Documents and other information submitted with these applications are available for review, subject to the requirements of the Privacy Act and Freedom of Information Act, by any party who submits a written request for a copy of such documents within 30 days of the date of publication of this notice to: U.S. Fish and Wildlife Service, Division of Management Authority, 4401 North Fairfax Drive, Room 700, Arlington, Virginia 22203; fax 703/358–2281.

FOR FURTHER INFORMATION CONTACT: Division of Management Authority, telephone 703/358–2104.

SUPPLEMENTARY INFORMATION:

Endangered Species

The public is invited to comment on the following application(s) for a permit to conduct certain activities with endangered species. This notice is provided pursuant to Section 10(c) of the Endangered Species Act of 1973, *as amended* (16 U.S.C. 1531, *et seq.*). Written data, comments, or requests for copies of these complete applications should be submitted to the Director (address above).

Applicant: San Diego Wild Animal Park, Escondido, California, PRT–047997.

The applicant requests a permit to import one male and one female captive-born Asian wild asses (*Equus kiang holdereri = E. hemionus*) and one female captive-born Somali wild ass (*Equus africanus somalicus*) from Tierpark Berlin-Friedrichsfelde, Germany for the purpose of enhancement of the survival of the species.

Applicant: Wheeling Park Commission, Ogelbay's Good Zoo, Wheeling, WV, PRT–053684.

The applicant request a permit to acquire through interstate commerce one male captive-born Komodo monitor (*Varanus komodoensis*) for the purpose of enhancement of the survival of the species through conservation education.

Applicant: Director, Division of Law Enforcement, U.S. Fish and Wildlife Service, Arlington, Virginia, PRT–691650.

The applicant requests renewal of a permit for five years to import and export any endangered or threatened species for the explicit purpose of investigations and other law enforcement activities in order to enhance the survival of the species in the wild.

Applicant: Director, National Fish and Wildlife Forensics Laboratory, U.S. Fish and Wildlife Service, Ashland, Oregon, PRT–053639.

The applicant requests renewal of a permit for five years to import and export any endangered or threatened species for the explicit purpose of forensics activities which will directly or indirectly enhance the survival of the species in the wild.

Applicant: John Newton Walker, Dallas, TX, PRT–053503.

The applicant request a permit to import the sport-hunted trophy of one male bontebok (*Damaliscus pygargus dorcas*) culled from a captive herd maintained under the management program of the Republic of South Africa, for the purpose of enhancement of the survival of the species.

Applicant: Omaha's Henry Doorly Zoo, Omaha, NE, PRT–053363.

The applicant request a permit to import two captive-born female Bornean orangutans (*Pongo pygmaeus pygmaeus*) from the Hong Kong Zoological and Botanical Gardens, Hong Kong, for the purpose of enhancement of the survival of the species through captive propagation.

Applicant: Omaha's Henry Doorly Zoo, Omaha, NE, PRT–053606.

The applicant request a permit to import captive-born male Amur leopard (*Panthera pardus orientalis*) from Jungle Cat World, Orono, Ontario, Canada, for the purpose of enhancement of the survival of the species through captive propagation.

Marine Mammals

The public is invited to comment on the following application(s) for a permit to conduct certain activities with marine mammals. The application(s) was submitted to satisfy requirements of the Marine Mammal Protection Act of 1972, *as amended* (16 U.S.C. 1361 *et seq.*) and the regulations governing marine mammals (50 CFR 18). Written data, comments, or requests for copies of the complete applications or requests for a public hearing on these applications should be submitted to the Director (address above). Anyone requesting a hearing should give specific reasons why a hearing would be appropriate. The holding of such a hearing is at the discretion of the Director.

Applicant: John F. Wilhelm, Mill Valley, CA, PRT–053629.

The applicant requests a permit to import a polar bear (Ursus maritimus) sport hunted from the Southern Beaufort Seapolar bear population in Canada for personal use.

The U.S. Fish and Wildlife Service has information collection approval from OMB through March 31, 2004, OMB Control Number 1018–0093.

Federal Agencies may not conduct or sponsor and a person is not required to respond to a collection of information unless it displays a current valid OMB control number.

Dated: March 1, 2002.

Monica Farris,

Senior Permit Biologist, Branch of Permits, Division of Management Authority.

[FR Doc. 02–6729 Filed 3–19–02; 8:45 am]

BILLING CODE 4310–55–P

DEPARTMENT OF THE INTERIOR

Fish and Wildlife Service

Endangered Species Permit Applications

AGENCY: Fish and Wildlife Service, Interior.

ACTION: Notice of receipt of permit applications.

SUMMARY: The following applicants have applied for a scientific research permit to conduct certain activities with endangered species pursuant to section 10(a)(1)(A) of the Endangered Species Act of 1973, as amended (16 USC 1531 *et seq.*). The U.S. Fish and Wildlife Service solicits review and comment from local, State, and Federal agencies, and the public on the following permit requests.

Permit No. TE–052307

Applicant: Marck Menke, San Fransisco, California.

The applicant requests a permit to take (collect) *Eriodictyon altissimum* (Indian Knob Mountain Balm) and *Eriodictyon capitatum* (Lompoc Yerba Santa) in conjunction with evolutionary plant studies in San Luis Obispo and Santa Barbara Counties, California for the purpose of enhancing their survival.

Permit No. TE–797233

Applicant: Entomological Consulting Services, Ltd., Pleasant Hill, California.

The permittee requests a permit amendment to take (survey by pursuit) the Palos Verdes blue butterfly *(Glaucopsyche lygdamus palosverdesensis)* and the Smith's blue butterfly *(Euphilotes enoptes smithi)*, and take (harass by survey and collect) the Ohlone tiger beetle *(Cicindela ohlone)* in conjunction with life history studies in Los Angeles, Monterey, Santa Cruz, and San Luis Obispo Counties, California for the purpose of enhancing their survival.

Permit No. TE–040555

Applicant: Steven L. Jessup, Ashland, Oregon.

The applicant requests a permit to take (collect tissue samples, flowers, and leaves) *Fritillaria gentneri* (Gentner's fritillary) in conjunction with genetic plant studies in Jackson and Josephine Counties, Oregon for the purpose of enhancing its survival.

Permit No. TE–051582

Applicant: William Goggin, San Leandro, California.

The applicant requests a permit to: take (harass by survey) the California clapper rail *(Rallus longirostris obsoletus)* and the southwestern willow flycatcher *(Empidonax traillii extimus)*; and take (capture) the California tiger salamander *(Ambystoma californiense),* the California freshwater shrimp *(Syncaris pacifica),* the Alameda whipsnake *(Masticophis lateralis euryxanthus),* the salt marsh harvest mouse *(Reithrodontomys raviventris),* and the San Francisco garter snake *(Thamnophis sirtalis tetrataenia)* throughout the range of each species in conjunction with surveys for the purpose of enhancing their survival.

Permit No. TE–787484

Applicant: Kathleen M. Keane, Long Beach, California.

The permittee requests a permit amendment to take (locate and monitor nests) the California least tern *(Sterna antillarum browni)* in Santa Barbara and San Luis Obispo Counties, California in conjunction with monitoring activities for the purpose of enhancing its survival.

Permit No. TE–702631

Applicant: Regional Director, Region 1, U.S. Fish and Wildlife Service, Portland, Oregon.

The permittee requests a permit amendment to take the Carson wandering skipper *(Pseudocopaeodes eunus obscurus)* and the Columbia Basin distinct population segment of the pygmy rabbit *(Brachylagus idahoensis).* Take activities will be conducted throughout the range of the species in conjunction with recovery efforts for the purpose of enhancing their propagation and survival.

Permit No. TE–052744

Applicant: Shannon Hickey, Davis, California.

The applicant requests a permit to take (harass by survey, collect and sacrifice) the Conservancy fairy shrimp *(Branchinecta conservatio),* the longhorn fairy shrimp *(Branchinecta longiantenna),* the San Diego fairy shrimp *(Branchinecta sandiegonensis),* the vernal pool tadpole shrimp *(Lepidurus packardi),* and the Riverside fairy shrimp *(Streptocephalus wootoni)* throughout the range of each species in conjunction with surveys for the purpose of enhancing their survival.

Permit No. TE–812206

Applicant: Robin Church, La Mesa, California.

The applicant requests a permit to take (harass by survey) the southwestern willow flycatcher *(Empidonax traillii extimus)* in San Diego, Orange, and Riverside Counties, California in conjunction with surveys for the purpose of enhancing its survival.

Permit No. TE–052847

Applicant: Mike D. Taylor, Irvine, California

The applicant requests a permit to take (monitor nests) the least Bell's vireo (*Vireo bellii pusillus)* in Los Angeles, Orange, and Riverside Counties, California in conjunction with surveys for the purpose of enhancing its survival.

Permit No. TE–052953

Applicant: Oregon Department of Forestry, Salem, Oregon.

The applicant requests a permit to take (harass by survey) the Oregon chub (*Oregonichthys crameri*) in Baker, Benton, Clackamas, Crook, Deschutes, Gilliam, Grant, Lake, Lane, Linn, Hood River, Jackson, Jefferson, Klamath, Marion, Multnomah, Polk, Umatilla, Union, Wasco, Washington, Wheeler, and Yamhill Counties, Oregon in conjunction with surveys for the purpose of enhancing its survival.

Permit No. TE–052747

Applicant: Edward J. Stanton, Sun City, California.

The applicant requests a permit to take (survey by pursuit) the Quino checkerspot butterfly (*Euphydryas editha quino*) in conjunction with vegetation management activities in Riverside County, California for the purpose of enhancing its survival.

Permit No. TE–051248

Applicant: Paul M. Lemons, La Jolla, California.

The applicant requests a permit to take (survey by pursuit) the Quino checkerspot butterfly (*Euphydryas editha quino*) throughout the range of the species in conjunction with surveys for the purpose of enhancing its survival.

Permit No. TE–051250

Applicant: Kamarul Muri, Encinitas, California.

The applicant requests a permit to take (survey by pursuit) the Quino checkerspot butterfly (*Euphydryas editha quino*) throughout the range of the species in conjunction with surveys for the purpose of enhancing its survival.

Permit No. TE–051230

Applicant: Michele Balk, Encinitas, California.

The applicant requests a permit to take (survey by pursuit) the Quino checkerspot butterfly (*Euphydryas editha quino*) throughout the range of the species in conjunction with surveys for the purpose of enhancing its survival.

Permit No. TE–053020

Applicant: Andrew Pigniolo, San Diego, California.

The applicant requests a permit to take (survey by pursuit) the Quino checkerspot butterfly (*Euphydryas editha quino*) in San Diego and Riverside Counties, California, in conjunction with surveys for the purpose of enhancing its survival.

Permit No. TE–053018

Applicant: Environmental Science & Assessment, Portland, Oregon.

The applicant requests a permit to take (survey, mark, recapture) the Oregon chub (*Oregonichthys crameri*) in Marion and Linn Counties, Oregon, in conjunction with surveys for the purpose of enhancing its survival.

DATES: Written comments on these permit applications must be received within 30 days of the date of publication of this notice.

ADDRESSES: Written data or comments should be submitted to the Chief, Endangered Species, Ecological Services, Fish and Wildlife Service, 911 NE. 11th Avenue, Portland, Oregon 97232–4181; Fax: (503) 231–6243. Please refer to the respective permit number for each application when submitting comments. All comments received, including names and addresses, will become part of the official administrative record and may be made available to the public.

FOR FURTHER INFORMATION CONTACT: Documents and other information submitted with these applications are available for review, subject to the requirements of the Privacy Act and Freedom of Information Act, by any party who submits a written request for a copy of such documents within 20 days of the date of publication of this notice to the address above; telephone: (503) 231–2063. Please refer to the respective permit number for each application when requesting copies of documents.

Dated: March 24, 2002.

Rowan W. Gould,

Regional Director, Region 1, Portland, Oregon.

[FR Doc. 02–6683 Filed 3–19–02; 8:45 am]

BILLING CODE 4310–55–P

DEPARTMENT OF THE INTERIOR

Fish and Wildlife Service

Notice of Receipt of Applications for Permit

Endangered Species

The public is invited to comment on the following application(s) for a permit to conduct certain activities with endangered species. This notice is provided pursuant to Section 10(c) of the Endangered Species Act of 1973, as amended (16 U.S.C. 1531, *et seq.*). Written data, comments, or requests for copies of these complete applications should be submitted to the Director (address below) and must be received within 30 days of the date of this notice.

Applicant: Jeanne A. Mortimer/University of Florida, Gainesville, FL, PRT–811272.

The applicant requests re-issuance of a permit to import biological samples obtained from green sea turtles (*Chelonia mydas*) and hawksbill sea turtles (*Eretmochelys imbricata*) located on beaches or in waters on/around the Republic of Seychelles and Chagos Island, British Indian Ocean Territory, for scientific research. This notification covers activities conducted by the applicant over a five year period.

Applicant: Clifford G. McGehee, Jacksonville, FL, PRT–053223.

The applicant request a permit to import the sport-hunted trophy of one male bontebok (Damaliscus pygargus dorcas) culled from a captive herd maintained under the management program of the Republic of South Africa, for the purpose of enhancement of the survival of the species.

Applicant: Anthony Gioffre, Dublin, OH, PRT–053326.

The applicant request a permit to import the sport-hunted trophy of one male bontebok (Damaliscus pygargus dorcas) culled from a captive herd maintained under the management program of the Republic of South Africa, for the purpose of enhancement of the survival of the species.

Applicant: Savannah River Ecology Laboratory/University of Georgia, Aiken, SC, PRT–051521.

The applicant requests a permit to export biological samples from wood stork (*Mycteria americana*) collected in the wild in the United States, to the Universidade Federal de Sao Carlos, San Carlos, Brazil, for scientific research.

Applicant: Bonnie Ringo, Cave Junction, OR, PRT–049054.

The applicant requests a permit to export five captive-born white tigers (*Panthera tigris*) to the Zion Wildlife Gardens, Kerikeri, New Zealand, for the purpose of enhancement of the survival of the species.

Documents and other information submitted with these applications are available for review, subject to the requirements of the Privacy Act and Freedom of Information Act, by any party who submits a written request for a copy of such documents within 30 days of the date of publication of this notice to: U.S. Fish and Wildlife Service, Division of Management Authority, 4401 North Fairfax Drive, Room 700, Arlington, Virginia 22203, telephone 703/358–2104 or fax 703/358–2281.

Dated: February 22, 2002.

Michael S. Moore,

Senior Permit Biologist, Branch of Permits, Division of Management Authority.

[FR Doc. 02–6731 Filed 3–19–02; 8:45 am]

BILLING CODE 4310–55–P

DEPARTMENT OF THE INTERIOR

Fish and Wildlife Service

Endangered and Threatened Wildlife and Plants; Status of the Rio Grande Cutthroat Trout

AGENCY: Fish and Wildlife Service, Interior.

ACTION: Re-opening of the comment period for the Rio Grande cutthroat trout candidate status review.

SUMMARY: We, the U.S. Fish and Wildlife Service (Service) announce a re-opening of the comment period for the candidate status review for the Rio Grande cutthroat trout (*Oncorhynchus clarki virginalis*). We are re-opening the comment period to allow interested parties additional time to submit information to us for our consideration in determining whether the Rio Grande cutthroat trout should be a candidate for listing. On December 28, 2001 (66 FR 67289), we published a notice opening a comment period to obtain information on the status of the Rio Grande Cutthroat Trout. That comment period

closed on February 26, 2002. On or before June 4, 2002, we will make a determination concerning the results of this review for the Rio Grande cutthroat trout and, shortly thereafter, we will publish this determination in the **Federal Register**. We will accept information at any time on the status of the Rio Grande cutthroat trout; however, information must be received by March 29, 2002, in order for us to be able to consider it in our June 4, 2002, determination of candidate status.

DATES: Comments and information from all interested parties for our use in the status review will be accepted until March 29, 2002.

ADDRESSES: Questions and comments concerning this status review should be sent to Joy Nicholopoulos, Field Supervisor, U.S. Fish and Wildlife Service, 2105 Osuna Rd. NE, Albuquerque, NM 87113. Comments and materials received will be available on request for public inspection, by appointment, during normal business hours at the above address.

FOR FURTHER INFORMATION CONTACT: Joy Nicholopoulos, Field Supervisor, (see **ADDRESSES** section), telephone (505) 346–2525.

SUPPLEMENTARY INFORMATION:

Background

On February 25, 1998, we received a petition from Kieran Suckling, of the Southwest Center for Biological Diversity requesting that the Service add the Rio Grande cutthroat trout (*Onchorynchus clarki virginalis*) to the list of threatened and endangered species. The petition addressed the range-wide distribution of the Rio Grande cutthroat trout that included populations in Colorado and New Mexico.

The Rio Grande cutthroat trout is the southernmost of 14 subspecies of cutthroat trout (Behnke 1967, 1972, 1992; Sublette *et al.* 1990). There are two phenotypic forms of the subspecies, one in the Rio Grande and one in the Pecos River (Behnke 1992). The species derives its name from the distinctive red or orange slashes beneath the lower jaw. The general body coloration is yellowish green to grayish brown; the abdomen is creamy white. Variably-sized black spots cover the upper body and are more numerous posteriorly; dorsal, adipose, and caudal fins carry black spots (Koster 1957, Behnke 1992, Sublette et al. 1990). Although the historical distribution of the Rio Grande cutthroat trout is not known with certainty, it is likely that the subspecies occurred not only in all waters in the upper Rio Grande, Pecos, and Canadian River Basins that are currently capable of supporting trout, but also in other stream reaches within these watersheds that formerly provided the habitat requisites of coldwater species.

Section 4(b)(3)(B) of the Act requires that we make a finding on whether a petition to list, delist or reclassify a species presents substantial scientific or commercial information indicating that the petitioned action is—(a) not warranted; (b) warranted; or (c) warranted but precluded from immediate proposal by other pending listing proposals of higher priority. We subsequently published a notice of a 90-day finding in the **Federal Register** (63 FR 49062) on September 14, 1998. In the 90-day finding we concluded that the petition did not present substantial information indicating that listing of the Rio Grande cutthroat trout may be warranted.

Our finding recognized that livestock grazing, road construction, and logging were primary factors in the constriction of the Rio Grande cutthroat trout's historical range, and continue to impact streams and riparian habitats where measures to limit those impacts are lacking. The Service concluded that the management objectives of both States, set forth in respective management plans formulated for the Rio Grande cutthroat, would provide for the continued management, conservation, and stability of this subspecies and its habitats.

On June 9, 1999, a complaint was filed by the Southwest Center for Biological Diversity challenging the September 14, 1998, 90-day petition finding as violating the Act and the Administrative Procedures Act. Recently, while the litigation was pending, we received some information (particularly related to the presence of whirling disease in hatchery fish and in the wild) that led us to believe that further review of the status of the species was warranted.

On November 8, 2001, a settlement agreement executed by both parties (the Service and the Southwest Center for Biological Diversity) was filed with the court. The settlement stipulates that we will initiate a candidate status review for the Rio Grande cutthroat trout. The settlement also stipulates that on or before June 4, 2002, we will make a determination concerning the results of this review and, shortly thereafter, we will publish our determination in the **Federal Register**. The agreement also states that we will not vacate our previous determination in the interim.

Request for Information

Our determination of candidate status for the Rio Grande cutthroat trout shall be based upon the best available scientific and commercial data, as required under section 4(b)(1)(A) of the Act. We request you submit any further information on the Rio Grande cutthroat trout. We are particularly interested in any information concerning the following:

(1) Current population numbers and trends for each of the populations of the Rio Grande cutthroat trout;

(2) Whether there are documented increases in those populations or their habitat;

(3) The status of remaining habitat areas;

(4) The current threats and future threats to those populations and remaining habitat areas; and

(5) Other regulatory mechanisms that address those threats; and the success of those mechanisms to date.

References Cited

A complete list of all references cited is available upon request from the New Mexico Ecological Services Field Office (see **ADDRESSES** section).

Author

The primary author of this document is New Mexico Ecological Services Field Office staff (see **ADDRESSES** section).

Authority

The authority for this action is section 4(b)(1)(A) of the Endangered Species Act, 16 U.S.C. 1533.

Dated: February 28, 2002.

Pat A. Langley,

Acting Regional Director.

[FR Doc. 02–6682 Filed 3–19–02; 8:45 am]

BILLING CODE 4310–55–P

DEPARTMENT OF THE INTERIOR

Fish and Wildlife Service

Issuance of Permit for Marine Mammals

AGENCY: Fish and Wildlife Service, Interior.

ACTION: Notice of issuance of permit for marine mammals.

SUMMARY: The following permit was issued.

ADDRESSES: Documents and other information submitted for these applications are available for review by any party who submits a written request to the U.S. Fish and Wildlife Service, Division of Management Authority, 4401 North Fairfax Drive, Room 700,

Arlington, Virginia 22203; fax (703) 358–2281.

FOR FURTHER INFORMATION CONTACT: Division of Management Authority, telephone 703/358–2104.

SUPPLEMENTARY INFORMATION:

On December 17, 2001, a notice was published in the **Federal Register** (66 FR 64986), that an application had been filed with the Fish and Wildlife Service by Jeffrey L. Meyerl for a permit (PRT–050657) to import one polar bear taken from the Lancaster Sound population, Canada, for personal use.

Notice is hereby given that on February 19, 2002, as authorized by the provisions of the Marine Mammal Protection Act of 1972, *as amended* (16 U.S.C. 1361 *et seq.*) the Fish and Wildlife Service authorized the requested permit subject to certain conditions set forth therein.

Dated: March 1, 2002.

Monica Farris,

Senior Permit Biologist, Branch of Permits, Division of Management Authority.

[FR Doc. 02–6728 Filed 3–19–02; 8:45 am]

BILLING CODE 4310–55–P

DEPARTMENT OF THE INTERIOR

Fish and Wildlife Service

Notice of Issuance of Permit for Marine Mammals

On October 31, 2001, a notice was published in the **Federal Register** (66 FR 55003), that an application had been filed with the Fish and Wildlife Service by The Newark Museum for a permit (PRT–042580) to import one polar bear skin (as a full mount) and skull taken from the Southern Beaufort Sea population, Canada, for public display.

Notice is hereby given that on February 12, 2002, as authorized by the provisions of the Marine Mammal Protection Act of 1972, *as amended* (16 U.S.C. 1361 *et seq.*) the Fish and Wildlife Service authorized the requested permit subject to certain conditions set forth therein.

On November 15, 2001, a notice was published in the **Federal Register** (66 FR 57474), that an application had been filed with the Fish and Wildlife Service by Sherman J. Silber, MD for a permit (PRT–049529) to import one polar bear taken from the Lancaster Sound population, Canada, for personal use. The notice mistakenly omitted that the trophy was taken prior to April 30, 1994.

Notice is hereby given that on February 4, 2002, as authorized by the provisions of the Marine Mammal Protection Act of 1972, *as amended* (16 U.S.C. 1361 *et seq.*) the Fish and Wildlife Service authorized the requested permit subject to certain conditions set forth therein.

Documents and other information submitted for these applications are available for review by any party who submits a written request to the U.S. Fish and Wildlife Service, Division of Management Authority, 4401 North Fairfax Drive, Room 700, Arlington, Virginia 22203, telephone (703) 358–2104 or fax (703) 358–2281.

Dated: February 22, 2002.

Michael S. Moore,

Senior Permit Biologist, Branch of Permits, Division of Management Authority.

[FR Doc. 02–6730 Filed 3–19–02; 8:45 am]

BILLING CODE 4310–55–P

DEPARTMENT OF THE INTERIOR

Fish and Wildlife Service

Battle of Midway National Memorial Advisory Committee; Meeting Notice

AGENCY: Fish and Wildlife Service, Interior.

ACTION: Notice of meeting.

SUMMARY: The Battle of Midway National Memorial Advisory Committee will hold its first meeting by teleconference on Thursday, April 4, 2002, from 2:00 p.m. to 4:00 p.m. Eastern Standard Time. During this teleconference, the committee will review its purpose as identified by Congress and the Secretary of the Interior, a list of objectives for the committee will be developed, and planning for the 60th anniversary celebration of the Battle of Midway will be initiated. A portion of the meeting will focus on the organization and functioning of a Federal Advisory Committee.

DATES: April 4, 2002, 2:00 p.m. to 4:00 p.m.

ADDRESSES: U.S. Fish and Wildlife Service, 4401 N. Fairfax Drive, Arlington, Virginia, room 500 or by teleconference.

FOR FURTHER INFORMATION CONTACT: Any member of the public wishing further information concerning the meeting or who wishes to submit oral or written comments should contact Barbara Maxfield, External Affairs Chief for the Fish and Wildlife Service's Pacific Islands Office, Box 50088, Honolulu, HI 96850; telephone (808) 541–2749; fax (808) 541–2756 no later than February 15, 2002. You may obtain copies of the draft meeting agenda from the same source.

SUPPLEMENTARY INFORMATION: As directed by Congress, the Secretary of the Interior established the Battle of Midway National Memorial Advisory Committee to facilitate development of a strategy for the dedication and management of this National Memorial. Members of the public are welcome to participate in any of its meetings.

Members of the public in the Washington, DC, area may attend the meeting in person in the U.S. Fish and Wildlife Service's Washington Office at 4401 N. Fairfax Drive, Arlington, Virginia, in room 500. Members of the public may also participate by teleconference, however, teleconference lines are limited. Please call Barbara Maxfield (808) 541–2749 if you are interested in participating in the call and to obtain the dial-in number. Seating in room 500 of the Fish and Wildlife Service's Arlington Square office is limited and is available on a first come, first served basis.

We will distribute written comments submitted to the Fish and Wildlife Service at the Honolulu address above to committee members prior to the meeting if we receive them in sufficient time to allow distribution. We will provide an opportunity for oral comments from the public during this teleconference meeting as well.

Dated: February 19, 2002.

Jerry F. Leinecke,

Project Leader, Hawaiian and Pacific Islands National Wildlife Refuge Complex.

[FR Doc. 02–6734 Filed 3–19–02; 8:45 am]

BILLING CODE 4310–55–P

DEPARTMENT OF THE INTERIOR

Bureau of Indian Affairs

Navajo Nation Liquor Ordinance

AGENCY: Bureau of Indian Affairs, Interior.

ACTION: Notice.

SUMMARY: This notice publishes the Navajo Nation Liquor Ordinance. The Ordinance is enacted as an amendment to the Navajo Nation Code § 412. The Ordinance regulates the control, possession, and sale of liquor on the Navajo Nation Indian trust lands, in conformity with the laws of the State of Arizona, where applicable and necessary. Although the Ordinance was adopted on July 20, 2001, it does not become effective until published in the **Federal Register** because the failure to comply with the Ordinance may result in criminal charges.

DATES: This Ordinance is effective on March 20, 2002.

FOR FURTHER INFORMATION CONTACT: Kaye Armstrong, Office of Tribal Services, 1849 C Street, NW., MS 4631–MIB, Washington, DC 20240–4001; telephone (202) 208–4400.

SUPPLEMENTARY INFORMATION: Pursuant to the Act of August 15, 1953, Public Law 83–277, 67 Stat. 586, 18 U.S.C. 1161, as interpreted by the Supreme Court in *Rice* v. *Rehner*, 463 U.S. 713 (1983), the Secretary of the Interior shall certify and publish in the **Federal Register** notice of adopted liquor ordinances for the purpose of regulating liquor transaction in Indian country. The Navajo Nation Liquor Ordinance, which amends the Navajo Nation Code § 412, as authorized by Resolution No. CJY–62–01, was duly adopted by the Navajo Nation Council on July 20, 2001. The Navajo Nation, in furtherance of its economic and social goals, has taken positive steps to regulate retail sales of alcohol and use revenues to combat alcohol abuse and its debilitating effects among individuals and family members within the Navajo Nation.

This notice is published in accordance with the authority delegated by the Secretary of the Interior to the Assistant Secretary—Indian Affairs by 209 Departmental Manual 8.1.

I certify that by Resolution No. CJY–62–01, the Navajo Nation Liquor Ordinance, amending the Navajo Nation Code § 412, was duly adopted by the Navajo Nation Council on July 20, 2001.

Dated: March 11, 2002.

Neal A. McCaleb,

Assistant Secretary—Indian Affairs.

The Navajo Nation Liquor Ordinance, amending the Navajo Nation Code § 412, reads as follows:

Amendment to Navajo Nation Code § 412

1. The Navajo Nation Council hereby amends 17 N.N.C. § 412 in the following manner:

(c) It shall not be unlawful for any person, Indian or non-Indian, to sell, deliver, transport or consume intoxicating liquor in that part of the Navajo Nation covered by the Antelope Point Resort and Marina Business Site Lease provided that the transportation, sale, delivery and consumption of alcoholic beverages is in conformity with applicable state regulatory liquor law, specifically excluding any state regulatory liquor laws which would require the Navajo Nation and/or its Lessee to be licensed by the State of Arizona, or to be in any way subject to the administrative, executive, judicial or legislative jurisdiction of the State of Arizona, and that all sales of alcoholic beverages be at prices no less than the prices charged for similar products in adjoining areas of the State of Arizona. The Economic Development Committee of the Navajo Nation Council is hereby authorized to approve such rules and regulations as are necessary and appropriate to ensure the proper transportation, sale, delivery and consumption of alcoholic beverages within the area of the Antelope Point Business Site Lease.

2. The Navajo Nation Council further stipulates that at the end of the term of the Antelope Point Resort and Marina Business Site Lease, and any options granted thereto, this legislation shall be subject to review and reauthorization by the Navajo Nation Council.

[FR Doc. 02–6738 Filed 3–19–02; 8:45 am]

BILLING CODE 4310–04–P

DEPARTMENT OF THE INTERIOR

National Park Service

CORRECTION—Notice of Inventory Completion for Native American Human Remains and Associated Funerary Objects in the Possession of the U.S. Department of the Interior, National Park Service, Effigy Mounds National Monument, Harpers Ferry, IA

AGENCY: National Park Service, Interior

ACTION: Correction

Notice is hereby given in accordance with provisions of the Native American Graves Protection and Repatriation Act (NAGPRA), 43 CFR 10.9, of the completion of an inventory of human remains and associated funerary objects in the possession of the U.S. Department of the Interior, National Park Service, Effigy Mounds National Monument, Harpers Ferry, IA.

This notice is published as part of the National Park Service's administrative responsibilities under NAGPRA, 43 CFR 10.2 (c). The determinations within this notice are the sole responsibility of the National Park Service unit that has control or possession of these Native American human remains and associated funerary objects. The Assistant Director, Cultural Resources Stewardship and Partnerships is not responsible for the determinations within this notice.

On March 9, 2001, the National Park Service published a Notice of Inventory Completion in the Federal Register for 15 Native American human remains and 3 associated funerary objects in the possession of Effigy Mounds National Monument. The notice incorrectly listed 12 human remains and 3 associated funerary objects recovered from Mound #57 as culturally affiliated with the Iowa Tribe of Kansas and Nebraska; Iowa Tribe of Oklahoma; Otoe-Missouria Tribe of Indians, Oklahoma; Ho-Chunk Nation of Wisconsin; Winnebago Tribe of Nebraska; Upper Sioux Indian Community of the Upper Sioux Reservation, Minnesota; Shakopee Mdewakanton Sioux Community of Minnesota (Prior Lake); Lower Sioux Indian Community of Minnesota Mdewakanton Sioux Indians of the Lower Sioux Reservation in Minnesota; and Prairie Island Indian Community of Minnesota Mdewakanton Sioux Indians of the Prairie Island Reservation, Minnesota. Based on additional information, the superintendent of Effigy Mounds National Monument determined that the 12 human remains and 3 associated funerary objects recovered from Mound #57 are culturally unidentifiable.

The Notice of Inventory Completion published by Effigy Mounds National Monument on March 9, 2001 (Federal Register Document 01-5944, pages 14201-14203) is corrected as follows:

The third paragraph is deleted.

The first sentence of the ninth paragraph is corrected to read: ''Based on the above-mentioned information, the Effigy Mounds National Monument superintendent has determined that, pursuant to 43 CFR 10.2 (d)(1), the human remains listed above represent the physical remains of three individuals of Native American ancestry.''

The second sentence of the ninth paragraph is deleted.

This correction has been sent to officials of the Iowa Tribe of Kansas and Nebraska; Iowa Tribe of Oklahoma; Otoe-Missouria Tribe of Indians, Oklahoma; Ho-Chunk Nation of Wisconsin; Sac and Fox Tribe of the Mississippi in Iowa; Sac and Fox Nation of Missouri in Kansas and Nebraska; Sac and Fox Nation, Oklahoma; Winnebago Tribe of Nebraska; Upper Sioux Indian Community of the Upper Sioux Reservation, Minnesota; Shakopee Mdewakanton Sioux Community of Minnesota; Lower Sioux Indian Community of Minnesota Mdewakanton Sioux Indians of the Lower Sioux Reservation in Minnesota; and Prairie Island Indian Community of Minnesota Mdewakanton Sioux Indians of the Prairie Island Reservation, Minnesota.

Repatriation of the three other human remains listed in the March 9, 2001, Notice of Inventory Completion is not affected by this correction.

Dated: September 12, 2001

John Robbins,

Assistant Director, Cultural Resources Stewardship and Partnerships.

[FR Doc. 02–6634 Filed 3–19–01; 8:45 am]

BILLING CODE 4310–70–S

DEPARTMENT OF JUSTICE

Immigration and Naturalization Service

Agency Information Collection Activities: Proposed Collection: Comment Request

ACTION: 60-Day Notice of Information Collection Under Review; Visa Waiver Program Carrier Agreement; Form I–775.

The Department of Justice, Immigration and Naturalization Service has submitted the following information collection request for review and clearance in accordance with the Paperwork Reduction Act of 1995. The proposed information collection is published to obtain comments from the public and affected agencies. Comments are encouraged and will be accepted for sixty days until May 20, 2002.

Written comments and suggestions from the public and affected agencies concerning the proposed collection of information should address one or more of the following four points:

(1) Evaluate whether the proposed collection of information is necessary for the proper performance of the functions of the agency, including whether the information will have practical utility;

(2) Evaluate the accuracy of the agencies estimate of the burden of the proposed collection of information, including the validity of the methodology and assumptions used;

(3) Enhance the quality, utility, and clarity of the information to be collected; and

(4) Minimize the burden of the collection of information on those who are to respond, including through the use of appropriate automated, electronic, mechanical, or other technological collection techniques or other forms of information technology, e.g., permitting electronic submission of responses.

Overview of this information collection:

(1) *Type of Information Collection:* Revision of a currently approved collection.

(2) *Title of the Form/Collection:* Visa Waiver Program Carrier Agreement.

(3) *Agency form number, if any, and the applicable component of the Department of Justice sponsoring the collection:* Form I–775. Inspections Division, Immigration and Naturalization Service.

(4) *Affected public who will be asked or required to respond, as well as a brief abstract:* Primary: Business or other for-profit. The agreement between a transportation company and the United States is needed to ensure that the transportation company will remain responsible for the aliens it transports to the United States under the Visa Waiver Program.

(5) *An estimate of the total number of respondents and the amount of time estimated for an average respondent to respond:* 400 responses at 2 hours per response.

(6) *An estimate of the total public burden (in hours) associated with the collection:* 800 annual burden hours.

If you have additional comments, suggestions, or need a copy of the proposed information collection instrument with instructions, or additional information, please contact Richard A. Sloan 202–514–3291, Director, Regulations and Forms Services Division, Immigration and Naturalization Service, U.S. Department of Justice, Room 4034, 425 I Street, NW., Washington, DC 20536. Additionally, comments and/or suggestions regarding the item(s) contained in this notice, especially regarding the estimated public burden and associated response time may also be directed to Mr. Richard A. Sloan.

If additional information is required contact: Mr. Robert B. Briggs, Clearance Officer, United States Department of Justice, Information Management and Security Staff, Justice Management Division, 601 D Street, NW., Patrick Henry Building, Suite 1600, Washington, DC 20530.

Dated: March 14, 2002.

Richard A. Sloan,

Department Clearance Officer, United States Department of Justice, Immigration and Naturalization Service.

[FR Doc. 02–6717 Filed 3–19–02; 8:45 am]

BILLING CODE 4410–10–M

DEPARTMENT OF JUSTICE

Office of Justice Programs

[OJP–1402]

Meeting of the Public Safety Officer Medal of Valor Review Board

AGENCY: Office of Justice Programs, Justice.

ACTION: Notice of meeting.

SUMMARY: This is the initial meeting of the Public Safety Officer Medal of Valor Review Board. This Board is charged with recommending recipients of the Public Safety Officer Medal of Valor, the highest national award for valor by a public safety officer. The purpose of this meeting is to conduct preliminary business of the Board.

DATES: The meeting will be held on Tuesday, March 26, 2002, at 10 a.m.

ADDRESSES: The meeting will be held in the Assistant Attorney General's Conference Room (Room 6403), Office of Justice Programs, 810 7th Street, NW., Washington, DC 20531.

FOR FURTHER INFORMATION CONTACT: Tracy A. Henke, Principal Deputy Assistant Attorney General, Office of Justice Programs, 810 7th Street, NW., Washington, DC, 20531; Telephone: 202–307–5933. [This is not a toll-free number.]

SUPPLEMENTARY INFORMATION: The Public Safety Officer Medal of Valor Review Board is authorized to carry out its advisory function under 42 U.S.C. section 15202. (42 U.S.C. section 15201 authorizes the President to award the Public Safety Officer Medal of Valor, the highest national award for valor by a public safety officer.)

This meeting will be open to the public.

Deborah J. Daniels,

Assistant Attorney General, Office of Justice Programs.

[FR Doc. 02–6639 Filed 3–19–02; 8:45 am]

BILLING CODE 4410–18–P

DEPARTMENT OF JUSTICE

Office of Justice Programs

[OJP(OJJDP)–1401]

Office of Juvenile Justice and Delinquency Prevention: Meeting of the Coalition of Juvenile Justice

AGENCY: Office of Justice Programs, Office of Juvenile Justice and Delinquency Prevention, Justice.

ACTION: Notice of meeting.

SUMMARY: The Office of Juvenile Justice and Delinquency Prevention is announcing the meeting of the Coalition for Juvenile Justice. The purpose of this meeting is to discuss and adopt recommendations from members regarding the committee's responsibility to advise the OJJDP Administrator, the President, and the Congress about state perspectives on the operation of OJJDP and Federal legislation pertaining to juvenile justice and delinquency prevention.

DATES: The meeting dates are:

1. Thursday, April 18, 2002, 10 a.m. to 6 p.m. (ET).
2. Friday, April 19, 2002, 8 a.m. to 5 p.m. (ET).
3. Saturday, April 20, 2002, 8 a.m. to 5 p.m. (ET)
4. Sunday, April 21, 2002, 8 a.m. to 5 p.m. (ET).

ADDRESSES: All meetings will be held at the Wyndham Hotel, 1400 M Street NW., Washington, DC 20005; Telephone: 202–429–1700; Fax: 202–728–0530.

FOR FURTHER INFORMATION CONTACT: For information about how to attend this meeting (or to submit written questions (optional)), contact Freida Thomas, 810 7th Street, NW., Washington, DC 20531; Telephone: 202–307–5924 [This is not a toll-free number]; Fax: 202–307–2819; E-mail: *Freida@ojp.usdoj.gov.*

SUPPLEMENTARY INFORMATION: The Coalition of Juvenile Justice, established pursuant to section 9 of the Federal Advisory Committee Act, (5 U.S.C. App. II), is meeting to carry out its advisory functions under section 5601 of the Juvenile Justice and Delinquency Prevention Act of 1974, 42 U.S.C., as amended.

This meeting will be open to the public.

Dated: March 14, 2002.

Terrence S. Donahue,

Acting Administrator, Office of Juvenile Justice and Delinquency Prevention.

[FR Doc. 02–6638 Filed 3–19–02; 8:45 am]

BILLING CODE 4410–18–P

DEPARTMENT OF LABOR

Employment and Training Administration

Notice of Determinations Regarding Eligibility to Apply for Worker Adjustment Assistance and NAFTA Transitional Adjustment Assistance

In accordance with section 223 of the Trade Act of 1974, as amended, the Department of Labor herein presents summaries of determinations regarding eligibility to apply for trade adjustment assistance for workers (TA–W) issued during the period of February, 2002.

In order for an affirmative determination to be made and a certification of eligibility to apply for worker adjustment assistance to be issued, each of the group eligibility requirements of section 222 of the Act must be met:

(1) That a significant number or proportion of the workers in the workers' firm, or an appropriate subdivision thereof have become totally or partially separated,

(2) That sales or production, or both, of the firm or subdivision have decreased absolutely, and

(3) That increases of imports of articles like or directly competitive with articles produced by the firm or appropriate subdivision have contributed importantly to the separations, or threat thereof, and to the absolute decline in sales or production.

Negative Determinations for Worker Adjustment Assistance

In each of the following cases the investigation revealed that criterion (3) has not been met. A survey of customers indicated that increased imports did not contribute importantly to worker separations at the firm.

TA–W–39,624; Nedec America Corp./ Power General, Canton, MA
TA–W–40,362; American Tissue Mills of Maine, Augusta, ME
TA–W–40,434; Imperial Carbide, Inc., Meadville, PA
TA–W–40,583; Mocaro Dyeing and Finishing, Inc., Statesville, NC
TA–W–40,704; Texfi Industries, Inc., Jefferson, GA
TA–W–40,597; Huhtamaki Food Service Div. Formerly Known as Packaging Mt. Carmel, PA
TA–W–40,750; Meridian Automotive Systems, Portland, OR
TA–W–40,804 & A; Cabinet Works LLC, Jefferson City, TN and Distinctive Woodworks LLC, Jefferson City, TN
TA–W–40,718; Bilco Manufacturing Corp., Macon, GA
TA–W–40,174; Diamond Tool and Die, Townville, PA
TA–W–39,422; Leatex Chemical Co., Philadelphia, PA

In the following cases, the investigation revealed that the criteria for eligibility have not been met for the reasons specified.

Increased imports did not contribute importantly to worker separations at the firm.

TA–W–40,870; Porex Technologies, Porous Products Group, A Div. Of Webmd Corp., College Point, NY
TA–W–40,809; Cascade General, Inc., Portland, OR
TA–W–39,704 Trico Products Corp., Buffalo, NY
TA–W–39,829; Acme Pattern Works, Inc., Chicago Heights, IL
TA–W–39,989; Crouse-Hinds, Div. Of Cooper Industries, Inc., Syracuse, NY
TA–W–40,135; GKN Aerospace North America, Carson, CA
TA–W–40,695; Nolato Shieldmate, Inc., Ilasca, IL
TA–W–40,721; Englehard Corp., McIntyre, GA
TA–W–40,765; Becton Dickinson, Hancock, NY

The workers firm does not produce an article as required for certification under section 222 of the Trade Act of 1974.

TA–W–40,770; Tree Machine Tools, Inc., Franklin, WI
TA–W–40,812; GeoComm Corp., El Paso, TX

The investigation revealed that criteria (2) has not been met. Sales or production did not decline during the relevant period as required for certification.

TA–W–40,443; James Hamilton Construction Co., Employed at Chico Mines Project, Silver City, NM

Affirmative Determinations for Worker Adjustment Assistance

The following certifications have been issued; the date following the company name and location of each determination references the impact date for all workers of such determination.

TA–W–40,573; Nortel Networks, Bohemia, NY: November 7, 2000.
TA–W–40,754; Molycorp, Inc., A Subsidiary of Unocal, Washington, PA: January 21, 2001
TA–W–39,735; Atchison Products, Inc., Boonville, MO: June 14, 2000.
TA–W–39,748; Engel Machinery, Inc., York, PA: August 6, 2000.
TA–W–40,037; Glad Rags, Inc., Buchanan, VA: August 31, 2000.
TA–W–40,106; Haskell—Senator International, Verona, PA: September 7, 2000.
TA–W–40,192; Camoplast Accufab, Inc., A Div. Of Camoplast, Ltd, Chillicothe, OH: September 26, 2000.
TA–W–40,284; The Carbide/Graphite Group, Inc., Niagara Falls, NY: September 24, 2000.
TA–W–40,308; Nachi Machining Technology Co., Machine Department, Macomb, MI: October 15, 2000.
TA–W–40,372; Square D Company, Schneider Electric North America, Middletown, OH: November 15, 2000.
TA–W–40,374; Osan Manufacturing, Boyertown, PA: November 16, 2000.
TA–W–40,705; ITT Industries, Newton, MA: December 18, 2000.
TA–W–40,463; Dunham-Bush, Inc., Harrisonburg, VA: October 31, 2000.
TA–W–40,500; Swift Spinning Mills, Inc., Marubeni Denim Div., Columbus, GA: December 19, 2000.
TA–W–40,561; Thermal Industries, Inc., Vinylium Corp., Pittsburgh, PA: October 19, 2000.

TA–W–40,722; Willow Creek Apparel, Inc., Jonesville, NC: January 7, 2001.
TA–W–40,783; Intertape Polymer Group, Inc., Central Products Company, Richmond, KY: December 21, 2000.
TA–W–40,841: FCI USA, Inc., Emigsville, PA: January 7, 2001.
TA–W–40,713; SDS Lumber Co., Plywood Div., Bingen, WA: January 9, 2001.
TA–W–40,618; Acordis Industrial Fibers, Inc., Scottsboro, AL: November 30, 2000.
TA–W–40,559; Maysville Garment, Inc., Maysville, NC: December 8, 2000.
TA–W–40,542; Vision Metals, Inc., Gulf States Tube Div., Rosenburg, TX: December 8, 2000.
TA–W–40,483, & A; Sumitomo Electric Wiring Systems, Inc., Wiring Harness Div., Edmonton, KY and Morgantown, KY: December 12, 2000.
TA–W–40,428; Sunlite Casual Furniture, Paragould, AR: December 4, 2000.
TA–W–40,377 & A; Dexter Shoe Co., Dexter, ME and National Sales Office, West Newton, MA: November 20, 2000.
TA–W–40,327; Storaenso North America, A Div. Of Storaenso OJY, Niagara, WI: October 29, 2001.
TA–W–40,257; H.R. Jones Veneer, Inc., Grand Ronde, OR: September 28, 2000.
TA–W–40,138; Cross Creek Apparel, LLC, Div of Russell Corp., Mount Airy, NC: March 12, 2001.
TA–W–39,717; Trio Tool and Die Manufacturing, Inc., Meadville, PA: July 17, 2000.
TA–W–39,532; Power Conversion Products, LLC, Crystal Lake, IL: June 18, 2000.

Also, pursuant to Title V of the North American Free Trade Agreement Implementation Act (P.L. 103–182) concerning transitional adjustment assistance hereinafter called (NAFTA–TAA) and in accordance with Section 250(a), Subchapter D, Chapter 2, Title II, of the Trade Act as amended, the Department of Labor presents summaries of determinations regarding eligibility to apply for NAFTA–TAA issued during the month of February, 2002.

In order for an affirmative determination to be made and a certification of eligibility to apply for NAFTA–TAA the following group eligibility requirements of section 250 of the Trade Act must be met:

(1) That a significant number or proportion of the workers in the workers' firm, or an appropriate subdivision thereof, (including workers in any agricultural firm or appropriate subdivision thereof) have become totally or partially separated from employment and either—

(2) That sales or production, or both, of such firm or subdivision have decreased absolutely,

(3) That imports from Mexico or Canada of articles like or directly competitive with articles produced by such firm or subdivision have increased, and that the increases imports contributed importantly to such workers' separations or threat of separation and to the decline in sales or production of such firm or subdivision; or

(4) That there has been a shift in production by such workers' firm or subdivision to Mexico or Canada of articles like or directly competitive with articles which are produced by the firm or subdivision.

Negative Determinations NAFTA–TAA

In each of the following cases the investigation revealed that criteria (3) and (4) were not met. Imports from Canada or Mexico did not contribute importantly to workers' separations.

There was no shift in production from the subject firm to Canada or Mexico during the relevant period.

NAFTA–TAA–05507; Dana Corp., Victor Reinz Div., Robinson, IL
NAFTA–TAA–05510; Corning Asahi Video, Inc., A Div. of Corning Asahi Video, State College, PA
NAFTA–TAA–05836; Tyco Electronics Corp., Jacobus, PA
NAFTA–TAA–05702; Meridian Automotive Systems, Portland, OR
NAFTA–TAA–05741; Cooper Industries, Western Power Products, Hood River, OR
NAFTA–TAA–05765; Prudential Steel, Inc., A Div. of Maverick Tube Co., Longview, WA
NAFTA–TAA–05785; Symbol Technologies, Inc., Houston Manufacturing, Houston, TX
NAFTA–TAA–05220; Trico Products Corp., Buffalo, NY
NAFTA–TAA–05236; J and J Tool, Guys Mills, PA
NAFTA–TAA–05293; Acme Pattern Works, Inc., Chicago Heights, IL
NAFTA–TAA–05558; Mocaro Dyeing and Finishing, Inc., Statesville, NC
NAFTA–TAA–05560; Fine Tech, Inc., d/b/a/ Daeduck International, RTP Div., Durham, NC
NAFTA–TAA–05597; Dana Corp., Spicer Driveshaft Manufacturing, Inc., Lima, OH
NAFTA–TAA–05670; Greenwood Mills, Durst Plant, Greenwood, SC

The workers firm does not produce an article as required for certification under Section 250(a), Subchapter D, Chapter 2, Title II, of the Trade Act of 1974, as amended.

NAFTA–TAA–05617; Plexus Corp., Electronic Assembly Corp., Neehah, WI
NAFTA–TAA–05752; Cascade General, Inc., Portland, OR
NAFTA–TAA–05805; GeoComm Corp., El Paso, TX
NAFTA–TAA–05607; ANR Pipeline Co., Detroit, MI

Affirmative Determinations NAFTA–TAA

NAFTA–TAA–05217; Amphenol Corp., Sine Systems, Mt. Clemens, MI: July 30, 2000.
NAFTA–TAA–05594; Square D Co., Schneider Electric North America,
NAFTA–TAA–05677; Swift Spinning Mills, Inc., Marubeni Denim Div., Columbus, GA: December 19, 2000.
NAFTA–TAA–05718; Iris Graphics, Inc., Billerica, MA: January 7, 2001.
NAFTA–TAA–05769; Materials Processing, Inc., Coatings Div., Riverview, MI: January 8, 2001
NAFTA–TAA–05807; Angelica Corp., Angelica Apparel, Savannah, TN: January 23, 2001
NAFTA–TAA–05812; 3M Bedford Park, Industrial Tape and Specialty Div., Bedford Park, IL: January 25, 2001.
NAFTA–TAA–05406; H.R. Jones Veneer, Inc., Grand Ronde, OR: October 8, 2000.
NAFTA–TAA–05486; Dixon Ticonderoga Co., Sandusky, OH: October 22, 2000.
NAFTA–TAA–05570; Arris Corp. a/k/a Antex Corp., Arris Network Plastics, El Paso, TX and Arris Consolidated Warehouse, El Paso, TX: November 20, 2000.
NAFTA–TAA–5635 & A; Sumitomo Electric Wiring Systems, Inc., Wiring Harness Div., Edmonton, KY and Morgantown, KY: December 12, 2000.
NAFTA–TAA–05651; Bourns, Inc., Networks/Sensors Controls Div., Logan, UT: December 2, 2000.
NAFTA–TAA–05666; Spicer Manufacturing, Inc., A Subsidiary of Dana Corp., Department 92, Pottstown, PA: December 5, 2000.
NAFTA–TAA–05730; SDS Lumber Co., Plywood Div., Bingen, WA: January 9, 2001.
NAFTA–TAA–05768; Ultrafem, Missoula, MT: January 14, 2001.
NAFTA–TAA–05778; Tyco Electronics, Georgetown Plant, Georgetown, KY: January 22, 2001.
NAFTA–TAA–05784; Ferraz Shawmut, Inc., Newburyport, MA: January 24, 2001

NAFTA–TAA–05814; Tyco International LTD, Tyco Electronics Corp., Arab, AL: January 28, 2001

NAFTA–TAA–05180; Paxar Corp., Formerly US Label Artistic, Including Workers of SDS Service, Inc., Liberty, KY: August 8, 2000.

I hereby certify that the aforementioned determinations were issued during the month of February, 2002. Copies of these determinations are available for inspection in Room C–5311, U.S. Department of Labor, 2000 Constitution Avenue, NW., Washington, DC 20210 during normal business hours or will be mailed to persons who write to the above address.

Dated: March 4, 2002.

Edward A. Tomchick,

Director, Division of Trade Adjustment Assistance.

[FR Doc. 02–6672 Filed 3–19–02; 8:45 am]

BILLING CODE 4510–30–M

DEPARTMENT OF LABOR

Employment and Training Administration

Notice of Determinations Regarding Eligibility To Apply for Worker Adjustment Assistance and NAFTA Transitional Adjustment Assistance

In accordance with section 223 of the Trade Act of 1974, as amended, the Department of Labor herein presents summaries of determinations regarding eligibility to apply for trade adjustment assistance for workers (TA–W) issued during the period of March, 2002.

In order for an affirmative determination to be made and a certification of eligibility to apply for worker adjustment assistance to be issued, each of the group eligibility requirements of Section 222 of the Act must be met:

(1) That a significant number or proportion of the workers in the workers' firm, or an appropriate subdivision thereof, have become totally or partially separated,

(2) That sales or production, or both, of the firm or subdivision have decreased absolutely, and

(3) That increases of imports of articles like or directly competitive with articles produced by the firm or appropriate subdivision have contributed importantly to the separations, or threat thereof, and to the absolute decline in sales or production.

Negative Determinations for Worker Adjustment Assistance

In each of the following cases the investigation revealed that criterion (3) has not been met. A survey of customers indicated that increased imports did not contribute importantly to worker separations at the firm.

TA–W–40,157 & A; The Steel Group, The Steel Co., Chicago, IL and Midwest Annealing and Processing Corp., East Chicago, IN

TA–W–40,436 & A; Dometic Corp., Awning Line, LAGrange, IN

TA–W–39,747; Precision Flame, Inc., Bourbonnais, IL

TA–W–40,672; Trio Dyeing and Finishing Co., Inc., Paterson, NJ

TA–W–40,453; Penley Corp., West Paris, ME

In the following cases, the investigation revealed that the criteria for eligibility have not been met for the reasons specified.

Increased imports did not contribute importantly to worker separations at the firm.

TA–W–40,773; S–B Power Tool Co., Walnut Ridge, AR

TA–W–40,720 & A; Rohm Device USA LLC, 760 Kifer Road, Sunnyvale, CA, Rohm Device USA LLC, 760 Kifer Road, Sunnyvale, CA and Rohm Device USA LLC, 611 N. Pastoria Avenue, Sunnyvale, CA

TA–W–40,550; Nokia, Inc., Nokia Networks, Product Operation, Fort Worth, TX

The workers firm does not produce an article as required for certification under Section 222 of the Trade Act of 1974.

TA–W–40,497; Lundeen's Inc., North Platte, NE

TA–W–40,444; Purcell Tire and Rubber Co., Santa Rita, NM

TA–W–39,282 & A,B,C,D,E; Standard Corp., Integrated Logistics, Wilmington, NC, Leland, NC, Kinston, NC, Grifton, NC Charleston, SC and Moncks Corner, SC

The investigation revealed that criteria (2) has not been met. Sales or production did not decline during the relevant period as required for certification.

TA–W–40,684; Independent Tool and Manufacturing, Inc., Meadville, PA

TA–W–40,610; The Goodyear Tire and Rubber Co., Gadsden, AL

Affirmative Determinations for Worker Adjustment Assistance

The following certifications have been issued; the date following the company name and location of each determination references the impact date for all workers of such determination.

TA–W–39,268; Whemco, Machine Shop, Homestead, PA: April 27, 2000

TA–W–39,269; Whemco, Midland, PA: April 27, 2000

TA–W–39,790; Vishay Intertechnologies, Inc., Vishay Cera-Mite Div., Oconto, WI: July 24, 2000

TA–W–40,149; Alphabet Engineer-Design Center, A Div. of Stoneridge, Inc., Cortland, OH: September 1, 2000

TA–W–40,270; Solectron Corp., Research Triangle Park, NC: October 9, 2000

TA–W–40,311; Buckeye Steel Castings Co., Columbus, OH: October 17, 2000

TA–W–40,382; Corning Asahi Video, A Div. of Corning, Inc., State College, PA: October 25, 2000. Chillicothe, OH: September 26, 2000

TA–W–40,409; Bogner of America, Inc., Newport, VT: November 21, 2000

TA–W–40,674 & A; B.B. Walker Co., Asheboro, NC and Bender Shoe Co., Somerset, PA: January 28, 2001

TA–W–40,475; New Holland North America, Inc., CNH Global N.V., Belleville, PA: January 4, 2001

TA–W–40,874; 3M Bedford Park, Industrial Tape and Specialty Div., Bedford Park, IL: January 25, 2001

TA–W–40,930; Prudential Steel, Inc., A Div. of Maverick Tube Co., Longview, WA: February 25, 2001

TA–W–40,436; Dometic Corp., Air Conditioning Line, LaGrange, IN: November 12, 2000

TA–W–40,814; Master Lock Co., A Subsidiary of Fortune Brands, Inc., Milwaukee, WI: January 25, 2001

TA–W–40,792; American Drew, A Div. of Ladd Furniture, Inc., North Wilkesboro, NC: December 5, 2000

TA–W–40,791; Lea Industries, A Div. of Ladd Furniture, Inc., Waynesville, NC: December 5, 2000

TA–W–40,739; Molycorp., Inc., A Subsidiary of Unocal, Questa, NM: January 8, 2001

TA–W–40,683; Vic's Custom Raft Frames, Inc., Grants Pass, OR: December 26, 2000

TA–W–40,648; Domino Amjet, Inc., Gurnee, IL: November 20, 2000

TA–W–40,681; Biokyowa, Inc., A Subsidiary of Kyowa Hakko Kogyo, Ltd, Cape Girardeau, MO: December 12, 2000

TA–W–40,664; Ferro Corp., Cesco Plant, Crooksville, OH: December 6, 2000

TA–W–40,633; Morrison Berkshire, Inc., North Adams, MA: January 15, 2001

TA–W–40,626; Allegheny Tool and Manufacturing Co., Inc., Meadville, PA: November 27, 2000

TA–W–40,625; Crane Pumps and Systems, Decatur, IL: September 26, 2000

TA–W–40,611; Hammond Power Solutions, Inc., Baraboo, WI: January 11, 2001
TA–W–40,571; Moon Tool and Die Co., Inc., Conneaut Lake, PA: October 22, 2000
TA–W–40,565; Environ, Inc., d/b/a Forrester's, Portland, OR: October 26, 2000
TA–W–40,384; K S Bearings, Inc., Greensburg, IN: November 16, 2000
TA–W–40,267; Lamb Technicon, A Div. of Unova, Warren, MI: October 12, 2000
TA–W–40,062; Tradewinds Cleaning Systems, Inc., Neosho, MO: September 4, 2000
TA–W–39,238; Amtec Precision Products, Inc., St. Clair Shores, MI: April 23, 2000
TA–W–40,563A & B; Bestform, Inc., Johnstown Distribution Center, Johnstown, PA and Windber Sewing Facility, Windber, PA: December 14, 2000
TA–W–40,563; Bestform, Inc., Broad Street Sewing Facility, Johnstown, PA: December 22, 2001
TA–W–40,508; Lexington Home Brands, Plant 16, Spruce Pines, NC: October 23, 2000
TA–W–49,442; Sohnen Enterprises, Inc., Santa Fe Springs, CA: May 25, 2000
TA–W–40,413; Mikes, Inc., Rod Shop, South Roxana, IL: November 13, 2000

Also, pursuant to Title V of the North American Free Trade Agreement Implementation Act (P.L. 103–182) concerning transitional adjustment assistance hereinafter called (NAFTA–TAA) and in accordance with section 250(a), Subchapter D, Chapter 2, Title II, of the Trade Act as amended, the Department of Labor presents summaries of determinations regarding eligibility to apply for NAFTA–TAA issued during the month of March, 2002.

In order for an affirmative determination to be made and a certification of eligibility to apply for NAFTA–TAA the following group eligibility requirements of section 250 of the Trade Act must be met:

(1) That a significant number or proportion of the workers in the workers' firm, or an appropriate subdivision thereof, (including workers in any agricultural firm or appropriate subdivision thereof) have become totally or partially separated from employment and either—

(2) That sales or production, or both, of such firm or subdivision have decreased absolutely,

(3) That imports from Mexico or Canada of articles like or directly competitive with articles produced by such firm or subdivision have increased, and that the increases imports contributed importantly to such workers' separations or threat or separation and to the decline in sales or production of such firm or subdivision; or

(4) That there has been a shift in production by such workers' firm or subdivision to Mexico or Canada of articles like or directly competitive with articles which are produced by the firm or subdivision.

Negative Determinations NAFA–TAA

In each of the following cases the investigation revealed that criteria (3) and (4) were not met. Imports from Canada or Mexico did not contribute importantly to workers' separations. There was no shift in production from the subject firm to Canada or Mexico during the relevant period.

NAFTA–TAA–05612A; Dometic Corp., Awning Line, LaGrange, IN
NAFTA–TAA–05379; Diamond Tool and Die, Townville, PA
NAFTA–TAA–05399; Shirts Plus II, Inc., Loretto, TN
NAFTA–TAA–05543; Nokia, Inc., Nokia Networks, Product Operations, Fort Worth TX
NAFTA–TAA–05715; Bilco Manufacturing Corp., Macon, GA
NAFTA–TAA–05372; New Era Textile Parts Co. Ltd, Gastonia, NC
NAFTA–TAA–05874; Bestform, Inc., Windber Cutting Facility, Windber, PA
NAFTA–TAA–05134; Precision Flame, Inc., Bourbonnais, IL

Affirmative Determinations NAFTA–TAA

NAFTA–TAA–05174; Engel Machinery, York, PA: July 6, 2000
NAFTA–TAA–05612; Dometic Corp., Air Conditioning Line, LaGrange, IN: November 12, 2000
NAFTA–TAA–04929; Sohnen Enterprises, Inc., Santa Fe Springs, CA: May 10, 2000
NAFTA–TAA–05018; Michigan Rivet Corp., Div. of McLaughlin Co., Petoskey, MI: June 20, 2000
NAFTA–TAA–05478; Conectl Corp., formerly Preco New Products, Boise, ID: September 19, 2000
NAFTA–TAA–05532; Flextronics International, Palm Habor, FL: November 7, 2000
NAFTA–TAA–05650; Holland Binkley Co., Axle Products Div., Delphos, OH: November 3, 2000
NAFTA–TAA–05744; Hayworth Inc., Holland Wood Plant, Holland, MI: December 4, 2000
NAFTA–TAA–05770; Kolenda Tool and Die, Inc., Wyoming, MI: January 23, 2001
NAFTA–TAA–05818; S–B Power Tool Co., Walnut Ridge, AR: January 28, 2001
NAFTA–TAA–05846; Evy of California, Bakersfield, CA: January 22, 2001
NAFTA–TAA–5860; Arlee Home Fashions, Leachville, AR: February 18, 2001

I hereby certify that the aforementioned determinations were issued during the month of March, 2002. Copies of these determinations are available for inspection in Room C–5311, U.S. Department of Labor, 200 Constitution Avenue, NW., Washington, DC 20210 during normal business hours or will be mailed to persons who write to the above address.

Dated: March 8, 2002.

Edward A. Tomchick,

Director, Division of Trade Adjustment Assistance.

[FR Doc. 02–6670 Filed 3–19–02; 8:45 am]

BILLING CODE 4510–30–M

DEPARTMENT OF LABOR

Employment and Training Administration

[TA–W–40,354]

International Paper Company, Erie, Pennsylvania; Including Contract Employees of Honeywell, Inc. Employed at International Paper Company Erie, Pennsylvania Amended Certification Regarding Eligibility to Apply for Worker Adjustment Assistance

In accordance with section 223 of the Trade Act of 1974 (19 USC 2273) the Department of Labor issued a Certification of Eligibility to Apply for Worker Adjustment Assistance on February 4, 2002, applicable to workers of International Paper Company, Erie, Pennsylvania. The notice was published in the **Federal Register** on February 28, 2002 (67 FR 9326).

At the request of Honeywell, Inc., the Department reviewed the certification for workers of the subject firm.

Information provided by the company shows that some workers at International Paper, Erie, Pennsylvania were contracted from Honeywell, Inc. to maintain and operate automated control systems required for the production of hardwood pulp and writing, text and cover paper produced at the Erie, Pennsylvania location of the subject firm.

Based on these findings, the Department is amending the

certification to include contract workers of Honeywell, Inc., employed at International Paper Company, Erie, Pennsylvania.

The intent of the Department's certification is to include all workers at International Paper Company, Erie, Pennsylvania, adversely affected by imports.

The amended notice applicable to TA–W–40,354 is hereby issued as follows:

All workers of International Paper Company, Erie, Pennsylvania including contract workers of Honeywell, Inc. engaged in employment related to the maintenance and operation of automated control systems required for the production of hardwood pulp and writing, text and cover paper at International Paper Company, Erie, Pennsylvania who became totally or partially separated from employment on or after November 2, 2000, through February 4, 2004, are eligible to apply for adjustment assistance under Section 223 of the Trade Act of 1974.

Signed at Washington, DC this 1st day of March, 2002.

Linda G. Poole,

Certifying Officer, Division of Trade Adjustment Assistance.

[FR Doc. 02–6668 Filed 3–19–02; 8:45 am]

BILLING CODE 4510–30–M

DEPARTMENT OF LABOR

Employment and Training Administration

Investigations Regarding Certifications of Eligibility To Apply for Worker Adjustment Assistance

Petitions have been filed with the Secretary of Labor under Section 221(a) of the Trade Act of 1974 (''the Act'') and are identified in the appendix to this notice. Upon receipt of these petitions, the Director of the Division of Trade Adjustment Assistance, Employment and Training Administration, has instituted investigations pursuant to section 221(a) of the Act.

The purpose of each of the investigations is to determine whether the workers are eligible to apply for adjustment assistance under Title II, Chapter 2, of the Act. The investigations will further relate, as appropriate, to the determination of the date on which total or partial separations began or threatened to begin and the subdivision of the firm involved.

The petitioners or any other persons showing a substantial interest in the subject matter of the investigations may request a public hearing, provided such request is filed in writing with the Director, Division of Trade Adjustment Assistance, at the address shown below, not later than April 1, 2002.

Interested persons are invited to submit written comments regrading the subject matter of the investigations to the Director, Division of Trade Adjustment Assistance, at the address shown below, not later than April 1, 2002.

The petitions filed in this case are available for inspection at the Office of the Director, Division of Trade Adjustment Assistance, Employment and Training Administration, U.S. Department of Labor, Room C–5311, 2000 Constitution Avenue, NW, Washington, DC 20210.

Signed at Washington, DC this 28th day of January, 2002.

Edward A. Tomchick,

Director, Division of Trade Adjustment Assistance.

APPENDIX

[Petitions Instituted on 01/28/2002]

TA–W	Subject firm (petitioners)	Location	Date of petition	Product(s)
40,634	LTV Steel (USWA)	Hennepin, IL	12/18/2001	Cold Rolled Sheet, Strip.
40,635	LTV Steel (USWA)	Warren, OH	12/04/2001	Coke and Coke By-Products.
40,636	King Manufacturing (Wkrs)	Corinth, MS	09/23/2001	Telephones.
40,637	Steelcraft, Inc. (Wkrs)	Warren, OH	11/27/2001	New Parts Supplied to Steel Companies.
40,638	Hayes Lemmerz Int'l (Wkrs)	Petersburg, MI	11/30/2001	Intake Manifolds.
40,639	Cooper Bussmann (Wkrs)	Goldsboro, NC	11/27/2001	Circuit Protection Devices—Fuses.
40,640	Timken Company (The) (USWA)	Canton, OH	11/29/2001	Bearings and Components.
40,641	Mobil Oil (Wkrs)	Dallas, TX	11/14/2001	Accounting Services.
40,642	Imerys Pigments (Wkrs)	Dry Branch, GA	11/27/2001	Kaolin Clay.
40,643	Robbins Witt (Wkrs)	Warren, AR	11/07/2001	Wood for Flooring.
40,644	Kraft Foods (Comp)	Minneapolis, MN	11/21/2001	Breakfast Cereals.
40,645	Star Specialty Knitting (Comp)	Laconia, NH	10/24/2001	Athletic Activewear.
40,646	GE Superabrasives (Comp)	Worthington, OH	11/28/2001	Superabrasives, Industrial Diamonds.
40,647	Biltwell Clothing (Comp)	Farmington, MO	11/29/2001	Warehousing, Distribution.
40,648	Domino Am Jet, Inc. (Comp)	Gurnee, IL	11/20/2001	Printers.
40,649	Steven Bank (Wkrs)	New York, NY	11/12/2001	Hospital Garments.
40,650	Signal Transformer Co. (Comp)	Inwood, NY	11/07/2001	Power Transformers.
40,651	Electron Corp. (The) (Wkrs)	Blockwell, OK	11/30/2001	Iron Castings.
40,652	VF Jeanswear Limited (Wkrs)	Springfield, MO	12/13/2001	Jeans and Pants.
40,652A	VF Jeanswear Limited (Wkrs)	Lebanon, MO	12/13/2001	Jeans and Pants.
40,653	Welland Chemical (USWA)	Newell, PA	12/13/2001	Mixed Acids.
40,654	In Vogue Apparel (Wkrs)	West Hazleton, PA	12/03/2001	Ladies' Slacks.
40,655	Fujitsu Microelectronics (Wkrs)	Gresham, OR	12/21/2001	Flash Memory Devices (Wafers).
40,656	Vanity Fair Intimates (Comp)	Monroeville, AL	12/10/2001	Ladies' Intimate Apparel.
40,656A	Vanity Fair Intimates (Comp)	Atmore, AL	12/10/2001	Ladies' Intimate Apparel.
40,657	Agilent Technologies (Wkrs)	Fort Collins, CO	11/27/2001	Silcon Wafers.
40,658	Polaroid Corporation (Comp)	Waltham, MA	12/08/2001	Film Packs.
40,659	Georgia Pacific (Wkrs)	Conway, NC	12/13/2001	Hardboard.
40,660	Mettler Toledo Process (Comp)	Woburn, MA	12/03/2001	PH Electrodes.
40,661	Osley and Whitney (Wkrs)	Westfield, MA	12/03/2001	Plastic Injection molds.
40,662	Rivers West Apparel (Wkrs)	Manti, UT	01/22/2001	Outdoor Apparel (Vests, Jackets).
40,663	Greenwood Mills—Liberty (Wkrs)	Liberty, SC	12/18/2001	Finished Denim Fabric.
40,664	Ferro Corporation (Wkrs)	Crooksville, OH	12/03/2001	Ceramics.
40,665	P and H Mining Equipment (Wkrs)	Milwaukee, WI	12/12/2001	Electric Mining Shovels.

APPENDIX—Continued

[Petitions Instituted on 01/28/2002]

TA–W	Subject firm (petitioners)	Location	Date of petition	Product(s)
40,666	Loren Casting (Wkrs)	Hollywood, FL	12/04/2001	Rings, Pendants, and Earrings.
40,667	Leech Tool and Die Works (Wkrs)	Meadville, PA	12/19/2001	Plastic Molds and Dies.
40,668	Ray Fabricating Corp (Comp)	Athens, TN	12/06/2001	Steel Fabricated Fittings.
40,669	Great Lakes Chemical (Comp)	Nitro, WV	12/14/2001	Flame Retardant & Fluid Phosphate Esters.
40,670	Knitcraft, Inc. (Comp)	Belmont, NC	12/17/2001	Unfinished Knit Goods.
40,671	Isola Laminate Systems (Comp)	LaCrosse, WI	12/10/2001	Laminate Base Materials.
40,672	Trio Dyeing and Finishing (Wkrs)	Paterson, NJ	12/14/2001	Textiles.
40,673	Stanley Fastening Systems (Wkrs)	E. Greenwich, RI	12/05/2001	Pneumatic nailers.
40,674	Bender Shoe (Comp)	Somerset, PA	12/17/2001	Western Boots.
40,675	Titan Plastic Group (Wkrs)	El Paso, TX	12/17/2001	Plastic Components.
40,676	Tyco Electronics (Wkrs)	Greensboro, NC	12/03/2001	Electronic Components.
40,677	Purcell Tire (Comp)	Silver City, NM	12/03/2001	Mining Tires.
40,678	Active Transportation (IBT)	Portland, OR	12/17/2001	Provide Trucking Service.
40,679	Eaton Corporation (Wkrs)	Sanford, NC	12/13/2001	Thermal Expansion Valve.
40,680	Pan Am Shoe Co. (Comp)	Camuy, PR	12/21/2001	Shoes.
40,681	Biokyowa, Inc. (Comp)	Cape Girardeau, MO	12/12/2001	Amino Acid Feed Supplements—Animals.
40,682	World Kitchen, Inc. (Comp)	Martinsburg, WV	12/20/2001	Glass Ceramic Cookware.
40,683	Vic's Custom Raft Frames (Wkrs)	Grants Pass, OR	12/26/2001	Hunting Blinds.
40,684	Independent Tool and Mfg. (Comp)	Meadville, PA	12/11/2001	Internal Parts—Plastic Mold Industry.
40,685	Ingersoll Rand (IAMAW)	Mayfield, KY	10/31/2001	Centrifugal Air Compressors.
40,686	AutoDie International (Comp)	Grand Rapids, MI	11/30/2001	Tool and Die—Auto Industry.
40,687	Goodyear Dunlop Tires (USWA)	Huntsville, AL	11/28/2001	Radial Tires.
40,688	Sanmina (Wkrs)	Clinton, NC	10/18/2001	Electronics.
40,689	Motor Coils Manufacturing (IUE)	St. Louis, MO	11/02/2001	Motor Coils.
40,690	Indiana Knitwear Corp (Comp)	Lyford, TX	11/09/2001	Active Wear.
40,691	Double Eagle Mfg. (Comp)	Tallassee, AL	11/05/2001	Children's Clothing.
40,692	VarTec CRM, Inc (Wkrs)	Waco, TX	11/30/2001	Provide Customer Relations Management.
40,693	Intervet, Inc (Comp)	Gainesville, GA	11/20/2001	Poultry Vaccines.
40,693A	Intervet, Inc. (Comp)	State College, PA	11/20/2001	Poultry Vaccines.
40,694	Commercial Warehouse (Wkrs)	El Paso, TX	11/18/2001	Surgical Blankets.
40,695	Nolato Shieldmate (Comp)	Itasca, IL	11/27/2001	Plastic Housing for Cellular Phones.
40,696	National Mills (Wkrs)	Dayton, TN	11/16/2001	Tee Shirts.
40,697	First Source Furniture (Wkrs)	Halls, TN	10/24/2001	Office Furniture.
40,698	3M San Marcos (Comp)	San Marcos, CA	01/02/2001	Packs, Bags, Rod Tubes—Fly Fishing.
40,699	AA Precisioneering (Comp)	Meadville, PA	10/24/2001	Tool and Die Makers.
40,700	Cmac Quartz Crystals (Wkrs)	Mechanicsburg, PA	10/22/2001	Electronic Oscillators.
40,701	Internet Arena (Wkrs)	Portland, OR	10/18/2001	Technical Support for Internet use.
40,702	Design and Cut, Inc. (Wkrs)	Cartersville, GA	10/18/2001	Sheat Shirts and Pant.
40,703	Liberty Fabrics (Comp)	New York, NY	11/19/2001	Fabrics.
40,704	Texfi Industries (Comp)	Jefferson, GA	10/22/2001	Apparel Fabric.
40,705	ITT Industries (Wkrs)	Newton, MA	12/18/2001	Electromechanical Switches.

[FR Doc. 02–6662 Filed 3–19–02; 8:45 am]

BILLING CODE 4510–30–M

DEPARTMENT OF LABOR

Employment and Training Administration

[TA–W–40,523]

Parallax Power Components LLC, MagneTek, Inc., Goodland, Indiana; Amended Certification Regarding Eligibility To Apply for Worker Adjustment Assistance

In accordance with section 223 of the Trade Act of 1974 (19 USC 2273) the Department of Labor issued a Certification of Eligibility to Apply for Worker Adjustment Assistance on January 23, 2002, applicable to workers of Parallax Power Components LLC, Goodland, Indiana. The notice was published in the **Federal Register** on February 5, 2002 (67 FR 5294).

At the request of the company, the Department reviewed the certification for workers of the subject firm. The workers are engaged in the production of transformers. New information shows that Parallax Power Components purchased the Goodland, Indiana location of MagneTek, Inc. on June 29, 2001.

Information also shows that some workers separated from employment at the subject firm had their wages reported under a separate unemployment insurance (UI) tax account for Parallax Power Components LLC, MagneTek, Inc.

Accordingly, the Department is amending the certification to properly reflect this matter.

The intent of the Department's certification is to include all workers of Parallax Power Components LLC, Goodland, Indiana who were adversely affected by increased imports.

The amended notice applicable to TA–W–40,523 is hereby issued as follows:

''All workers of Parallax Power Components LLC, MagneTek, Inc., Goodland, Indiana who became totally or partially separated from employment on or after December 17, 2000, through January 23, 2004, are eligible to apply for adjustment assistance under Section 223 of the Trade Act of 1974.''

Signed at Washington, DC this 6th day of March, 2002.

Linda G. Poole,

Certifying Officer, Division of Trade Adjustment Assistance.

[FR Doc. 02–6667 Filed 3–19–02; 8:45 am]

BILLING CODE 4510–30–M

DEPARTMENT OF LABOR

Employment and Training Administration

[TA–W–39,574]

SGL Carbon Group, Morganton, North Carolina; Notice of Revised Determination on Reconsideration

By letter of November 5, 2001, the International Chemical Workers Union, AFL–CIO, Local 427, requested administrative reconsideration regarding the Department's Negative Determination Regarding Eligibility to Apply for Worker Adjustment Assistance, applicable to the workers of the subject firm.

The initial investigation resulted in a negative determination issued on September 21, 2001, based on the finding that imports of graphite electrodes and specialty graphite products did not contribute importantly to worker separations at the subject plant. The denial notice was published in the **Federal Register** on October 11, 2001 (66 FR 51973).

To support the request for reconsideration, the International Chemical Workers Union, AFL–CIO, Local 427 provided additional information indicating that a sister plant (SGL Carbon Corporation, Carbon and Graphite Unit, Niagara Falls, New York) was certified for TAA. The applicant further stated that the subject plant produced the same products, shared the same customers and conducted interplant shipments with the sister facility.

A review of the allegation and information provided by the company shows that a meaningful portion of subject plant production was in direct support of the SGL Carbon Corporation, Carbon and Graphite Unit, Niagara Falls, New York plant. That facility was certified TA–W–39,053) on August 31, 2001.

Conclusion

After careful review of the additional facts obtained on reconsideration, I conclude that increased imports of articles like or directly competitive with those produced at SGL Carbon Group, Morganton, North Carolina, contributed importantly to the decline in sales or production and to the total or partial separation of workers at the subject firm. In accordance with the provisions of the Act, I make the following certification:

All workers of SGL Carbon Group, Morganton, North Carolina, who became totally or partially separated from employment on or after March 29, 2000 through two years from the date of this certification, are eligible to apply for adjustment assistance under Section 223 of the Trade Act of 1974.

Dated: Signed in Washington, DC this 28th day of February 2002.

Edward A. Tomchick,

Director, Division of Trade Adjustment Assistance.

[FR Doc. 02–6669 Filed 3–19–02; 8:45 am]

BILLING CODE 4510–30–M

DEPARTMENT OF LABOR

Employment and Training Administration

[TA–W–38, 811 and TA–W–38, 811b]

Universal Furniture Limited, Morristown, and Universal Furniture Limited Corporate Office, High Point, NC; Amended Certification Regarding Eligibility To Apply for Worker Adjustment Assistance

In accordance with Section 223 of the Trade Act of 1974 (19 U.S.C. 2273) the Department of Labor issued a Certification of Eligibility to Apply for Worker Adjustment Assistance on April 30, 2001, applicable to workers of Universal Furniture Limited, Morristown, Tennessee. The notice was published in the **Federal Register** on May 18, 2001 (66 FR 27690).

At the request of the company, the Department reviewed the certification for workers of the subject firm. The workers were engaged in the production of bedroom and dining room furniture.

Information shows that worker separations occurred at the Corporate Office, High Point, North Carolina location of the subject firm. The workers provide administrative support functions and purchasing for the subject firm's production facilities including Morristown, Tennessee.

Accordingly, the Department is amending the certification to included workers of the Universal Furniture Limited, Corporate Office, High Point, North Carolina.

The intent of the Department's certification is to include all workers of Universal Furniture Limited adversely affect by increased imports.

The amended notice applicable to TA–W–38,811 is hereby issued as follows:

All workers of Universal Furniture Limited, Morristown, Tennessee (TA–W–38, 811) and Universal Furniture Limited, Corporate Office, High Point, North Carolina (TA–W–38, 811B) who became totally or partially separated from employment on or after March 10, 2000, through April 30, 2003, are eligible to apply for adjustment assistance under Section 223 of the Trade Act of 1974.

Signed at Washington, DC this 5th day of March, 2002.

Linda G. Poole,

Certifying Officer, Division of Trade Adjustment Assistance.

[FR Doc. 02–6665 Filed 3–19–02; 8:45 am]

BILLING CODE 9510–30–M

DEPARTMENT OF LABOR

Employment and Training Administration

Investigations Regarding Certifications of Eligibility To Apply for Worker Adjustment Assistance

Petitions have been filed with the Secretary of Labor under Section 221(a) of the Trade Act of 1974 (''the Act'') and are identified in the Appendix to this notice. Upon receipt of these petitions, the Director of the division of Trade Adjustment Assistance, Employment and Training Administration, has instituted investigations pursuant to Section 221(a) of the Act.

The purpose of each of the investigations is to determine whether the workers are eligible to apply for adjustment assistance under title II, chapter 2, of the Act. The investigations will further relate, as appropriate, to the determination of the date on which total or partial separations began or threatened to begin and the subdivision of the firm involved.

The petitioners or any other persons showing a substantial interest in the subject matter of the investigations may request a public hearing, provided such request is filed in writing with the Director, Division of Trade Adjustment Assistance at the address shown below, not later than April 1, 2002.

Interested persons are invited to submit written comments regarding the subject matter of the investigations to the Director, Division of Trade Adjustment Assistance at the address shown below, not later than April 1, 2002.

The petitions filed in this case are available for inspection at the Office of the Director, Division of Trade Adjustment Assistance Employment and Training Administration, U.S. Department of Labor, Room C–5311, 200 Constitution Avenue, NW., Washington, DC 20210.

Signed at Washington, DC this 4th day of February, 2002.

Edward A. Tomchick,

Director, Division of Trade Adjustment Assistance.

APPENDIX

[Petitions Instituted on 02/04/2002]

TA–W	Subject firm (petitioners)	Location	Date of petition	Product(s)
40,706	Valley City Steel (Wkrs)	Valley City, OH	01/24/2002	Pickling and Slitting Hot Rolled Steel.
40,707	AG Simpson Automotive (UAW)	Sterling Height, MI	01/23/2002	Automotive Bumpers.
40,708	Cannon County Knitting (Wkrs)	Smithville, TN	01/07/2002	Knit Apparel.
40,709	Agilent Technologies (Wkrs)	Santa Clara, CA	01/25/2002	Cad Library Parts.
40,710	Alpha Carb Enterprises (Wkrs)	Leechburg, PA	01/11/2002	Steel and Tungsten Carbide.
40,711	Carolina Glove Co (Comp)	Conover, NC	01/09/2002	Work Gloves.
40,712	Xerox Corp. (Wkrs)	Webster, NY	01/08/2002	Copiers—Digital.
40,713	SDS Lumber Co. (Comp)	Bingen, WA	01/09/2002	Plywood.
40,714	Ferraz Shawmut, Inc. (Wkrs)	Newburyport, MA	01/21/2002	Semi-Conductor Fuses.
40,715	Stewart and Stevenson (Comp)	Albuquerque, NM	01/14/2002	Provide Diesel Engine Services.
40,716	Hathaway/Waterville Shirt (UNITE)	Waterville, ME	01/02/2002	Shirts.
40,717	DyStar LP (Comp)	Coventry, RI	01/09/2002	Specialty Chemicals.
40,718	Bilco Manufacturing Corp (Comp)	Macon, GA	01/07/2002	Wooden Shell Rolls (Wooden Cores).
40,719	Associated Spring (Wkrs)	Dallas, TX	01/22/2002	Tractor Power Bake and Springs.
40,720	Rohm Device USA, Inc. (Comp)	Sunnyvale, CA	01/14/2002	Semiconductors.
40,721	Engelhard Corp (Comp)	McIntyre, GA	01/18/2002	Paper Coating and Filling—Kaolin.
40,722	Willow Creek Apparel (Wkrs)	Jonesville, NC	01/07/2002	Loungewear Apparel.
40,723	FC Meyer Packaging (Wkrs)	St. Louis, MO	12/11/2001	Shoe Cartons.
40,724	LTV Steel, Inc. (Wkrs)	Independence, OH	12/14/2001	Steel.
40,725	TI Group Automotive (Wkrs)	Coldwater, MI	12/07/2001	Machine Tooling.
40,726	Liberty Manufacturing (Wkrs)	Liberty, SC	12/18/2001	Denim Fabric.
40,727	Wells Lamont (Wkrs)	Eupora, MS	12/21/2001	Work Gloves.
40,728	Mikan Group, Inc. (UNITE)	Long Island Cty, NY	12/05/2001	Sportswear—Pants, Skirts.
40,729	Liz Claiborne, Inc. (UNITE)	Mt. Pocono, PA	12/14/2001	Men's and Ladies' Clothing.
40,730	Mears Tool and Die, Inc (Comp)	Cochranton, PA	12/14/2001	Bag Racks for Retail Stores.
40,731	Fulflex of Virginia (Comp)	Stuart, VA	12/10/2001	Rubber Tapes and Threads.
40,732	LM Services (Wkrs)	Cumberland, MD	12/04/2001	Distribute Sportswear.
40,733	Blauer Manufacturing Co (Comp)	Chatom, AL	12/18/2001	Outerwear and Rainwear.
40,734	Modular Mining Systems (Comp)	Tucson, AZ	12/10/2001	Hardware and Software.
40,735	VF Jeanswear Limited (Comp)	Jackson, TN	11/27/2001	Ladies' and Men's Jeans.
40,735A	VF Jeanswear Limited (Comp)	Prague, OK	11/27/2001	Ladies' and Men's Jeans.
40,735B	VF Jeanswear Limited (Comp)	Seminole, OK	11/27/2001	Ladies' and Men's Jeans.
40,736	VF Jeanswear Limited (Comp)	Shenandoah, VA	11/28/2001	Ladies' and Men's Jeans.
40,736A	VF Jeanswear Limited (Comp)	Madison, VA	11/28/2001	Ladies' and Men's Jeans.
40,736B	VF Jeanswear Limited (Comp)	Luray, VA	11/28/2001	Ladies' and Men's Jeans.
40,737	VF Jeanswear Limited (Wkrs)	El Paso, TX	01/16/2001	Jeans and Pants.
40,737A	VF Jeanswear Limited (Wkrs)	Fabens, TX	01/16/2001	Jeans and Pants.
40,738	DW Manufacturing (Comp)	White City, OR	12/18/2001	Service Provider—Electronic related.
40,739	Molycorp, Inc. (Comp)	Questa, NM	12/06/2001	Molybdenum.
40,740	Corning, Inc. (Comp)	Greenville, OH	12/27/2001	Corning Products.
40,741	Leavitt Communications (Wkrs)	Lincolnshire, IL	12/06/2001	Pagers.
40,742	Huhtamaki Foodservice (Comp)	Waterville, ME	12/11/2001	Plates, Bowls, Platters.
40,743	Hewlett Packard (Wkrs)	Colorado Spring, CO	09/26/2001	Computers.
40,744	Wabash Aluminum Alloys (Comp)	Richmond, VA	12/13/2001	Deox.
40,745	New Holland North America (Wkrs)	Belleville, PA	12/13/2001	Loaders and Various Hay Tools.
40,746	Saint-Gobain Crystals (Comp)	Washougal, WA	12/07/2001	Crystals.
40,747	Bose Corp. (Wkrs)	Hillsdale, MI	12/13/2001	Automotive Loudspeakers.
40,748	Felix Schoeller Technical (PACE)	Pulaski, NY	12/18/2001	Photo and Speciality Paper.
40,749	Trinity Industries (Wkrs)	Longview, TX	12/18/2001	Railcars.
40,750	Mid America Building (Comp)	Hurley, NM	12/21/2001	Janitorial Services.
40,751	Meridian Automotive (Wkrs)	Portland, OR	12/20/2001	Truck Hoods.
40,752	Cooper Standard Auto (Wkrs)	Fairview, MI	11/27/2001	Automotive Fluid Systems.
40,753	Tresco Tool, Inc (Comp)	Guys Mills, PA	11/06/2001	Plastic Injection Molds, Dies.
40,754	Molycorp, Inc. (USWA)	Washington, PA	01/21/2001	Ferromolybdenum.
40,755	Crompton Corp., Uniroyal (USWA)	Naugatuck, CT	11/02/2001	Chemicals.
40,756	MRC Bearings, SKF USA (UAW)	Jamestown, NY	11/27/2001	Ball and Roller Bearings.
40,757	Sony Electronics (Wkrs)	Mt. Pleasant, PA	10/10/2001	TV's, Tubes and Components.
40,758	R and M Dress/Old Friends (Wkrs)	Lebanon, PA	10/26/2001	Ladies' Sportswear.
40,759	Jordana, Inc. (Comp)	Medley, FL	10/29/2001	Ladies' Apparel.
40,760	Sew Special, Inc. (Comp)	Randleman, NC	10/30/2001	Ladies' Apparel.
40,761	Lou Levy and Sons (UNITE)	New York, NY	01/15/2002	Ladies' Coats.
40,762	Presto Products Mfg (Wkrs)	Alamo Gordo, NM	01/14/2002	Small Electric Appliances.
40,763	R.C.M. Manufacturing Co (Comp)	Fall River, MA	10/15/2001	Ladies' Coats.
40,764	Fit Rite Headwear, Inc. (Comp)	Wilkes, Barre, PA	10/30/2001	Sew Safety Products.
40,765	Becton Dickinson (Comp)	Hancock, NY	01/09/2001	Disposable Surgical Blades.
40,766	Harper-Wyman Co (Comp)	Princeton, IL	12/05/2001	Top Burners and Oven Burners.
40,767	Uniroyal Goodrich Tire (USWA)	Tuscaloosa, AL	11/30/2001	Radial Tires.

APPENDIX—Continued

[Petitions Instituted on 02/04/2002]

TA–W	Subject firm (petitioners)	Location	Date of petition	Product(s)
40,768	Borg Warner Automotive (Wkrs)	Coldwater, MI	01/03/2002	Damper Assemblies.
40,769	JBI LP (Comp)	Osseo, WI	12/17/2001	Paint Line Equipment.
40,770	Tree Machine Tool, Inc (IAMAW)	Franklin, WI	12/01/2001	Marketing of Machine Tools.
40,771	3M Company (Comp)	Bristol, PA	12/27/2001	Sealing, Packaging Tape.

[FR Doc. 02–6664 Filed 3–19–02; 8:45 am]

BILLING CODE 4510–30–M

DEPARTMENT OF LABOR

Employment and Training Administration

[NAFTA–5829]

Chambersburg Engineering Co., Chambersburg, Pennsylvania; Notice of Termination of Investigation

Pursuant to Title V of the North American Free Trade Agreement Implementation Act (Public Law 103–182) concerning transitional adjustment assistance, hereinafter called NAFTA–TAA and in accordance with section 250(a), Subchapter 2, Title II, of the Trade Act of 1974, as amended (19 U.S.C. 2331), an investigation was initiated on February 4, 2002, in response to a petition filed by a company official on behalf of workers at Chambersburg Engineering Co., Chambersburg, Pennsylvania.

The petitioner has requested that the petition be withdrawn. Consequently, further investigation in this case would serve no purpose, and the investigation has been terminated.

Signed in Washington, DC this 22nd day of February, 2002.

Linda G. Poole,

Certifying Officer, Division of Trade Adjustment Assistance.

[FR Doc. 02–6671 Filed 3–19–02; 8:45 am]

BILLING CODE 4510–30–M

DEPARTMENT OF LABOR

Employment and Training Administration

[NAFTA–05013]

Outboard Marine Corporation (OMC), Delavan, WI; Notice of Termination of Investigation

Pursuant to Title V of the North American Free Trade Agreement Implementation Act (Public Law 103–182) concerning transitional adjustment assistance, hereinafter called (NAFTA–TAA), and in accordance with Section 250(a), Subchapter D, Chapter 2, Title II, of the Trade Act of 1974, as amended (19 U.S.C. 2273), an investigation was initiated on June 20, 2001, in response to a petition filed on behalf of all workers at Outboard Marine Corporation (OMC), Delavan, Wisconsin.

The company filed Chapter 7 bankruptcy for all the locations of the Outboard Marine Corporation, including the subject facility. The trustee was unable to locate the records of the company to provide the Department the information necessary to issue a determination regarding the worker group eligibility requirements under paragraph (a)(1)(A) or (a)(1)(B) of Section 250 of the Trade Act of 1974, as amended. Consequently, further investigation in this case would serve no purpose, and the investigation has been terminated.

Signed at Washington, DC, this 5th day of March, 2002.

Linda G. Poole,

Certifying Officer, Division of Trade Adjustment Assistance.

[FR Doc. 02–6663 Filed 3–19–02; 8:45 am]

BILLING CODE 4510–30–M

DEPARTMENT OF LABOR

Employment and Training Administration

[Docket No. NAFTA–05682]

Parallax Power Components LLC, Magnetek, Inc., Goodland, IN; Amended Certification Regarding Eligibility To Apply for NAFTA–Transitional Adjustment Assistance

In accordance with section 250(A), subchapter D, chapter 2, Title II, of the Trade Act of 1974 (19 U.S.C. 2273) the Department of Labor issued a Certification for NAFTA Transitional Adjustment Assistance on January 16, 2002, applicable to workers of Parallax Power Components LLC, Goodland, Indiana. The notice was published in the **Federal Register** on January 31, 1002 (67 FR 4751).

At the request of the company, the Department reviewed the certification for workers of the subject firm. The workers are engaged in the production of transformers. New information shows that Parallax Power Components purchased the Goodland, Indiana location of MagneTek, Inc., on June 29, 2001.

Information also shows that some workers separated from employment at the subject firm had their wages reported under a separated unemployment insurance (UI) tax account for Parallax Power Components LLC, MagneTek, Inc.

Accordingly, the Department is amending the certification to properly reflect this matter.

The intent of the Department's certification is to include all workers of Parallax Power Components LLC, Goodland, Indiana who were adversely affected by company imports from Mexico and a shift in production of transformers.

The amended notice applicable to NAFTA—05682 is hereby issued as follows:

All workers of Parallax Power Components LLC, MagneTek, Inc., Goodland, Indiana who became totally or partially separated from employment on or after December 14, 2000, through January 16, 2004, are eligible to apply for NAFTA–TAA under Section 250 of the Trade Act of 1974.

Signed at Washington, DC this 6th day of March, 2002.

Linda G. Poole,

Certifying Officer, Division of Trade Adjustment Assistance.

[FR Doc. 02–6666 Filed 3–19–02; 8:45 am]

BILLING CODE 4510–30–M

DEPARTMENT OF LABOR

Pension Welfare Benefits Administration

[Application No: D–10936]

Proposed Amendment to Prohibited Transaction Exemption 96–62 (PTE 96–62) To Permit Certain Authorized Transactions Between Plans and Parties in Interest

AGENCY: Pension and Welfare Benefits Administration, Department of Labor.

ACTION: Notice of proposed amendment to PTE 96–62.

SUMMARY: This document contains a notice of pendency before the Department of a proposed amendment to PTE 96–62 (61 FR 39988, July 31, 1996). PTE 96–62 permits certain prospective transactions between employee benefit plans and parties in interest where such transactions are specifically authorized by the Department and are subject to terms, conditions and representations which are substantially similar to two individual exemptions granted by the Department within the 60 month period ending on the date of filing of a written submission seeking authorization for the transaction. If adopted, the proposed amendment would affect plans, participants and beneficiaries of such plans and certain persons engaging in such transactions.

DATES: Written comments and requests for a public hearing must be received by the Department on or before May 6, 2002.

ADDRESSES: All written comments and requests for a public hearing (preferably, at least three copies) should be addressed to: U.S. Department of Labor, Office of Exemption Determinations, Attention: D–10936, Pension and Welfare Benefits Administration, Room N–5649, 200 Constitution Ave., NW, Washington, DC 20210. Interested persons are also invited to submit comments and/or hearing requests to PWBA via e-mail or fax. Any such comments should be sent either by e-mail to *padamsa@pwba.dol.gov* or by fax at (202) 219–0204 by the end of the scheduled comment period. All comments received will be available for public inspection at the Public Documents Room, Pension and Welfare Benefits Administration, U.S. Department of Labor, Room N–1513, 200 Constitution Ave., NW, Washington, DC 20210.

FOR FURTHER INFORMATION CONTACT: Allison Padams Lavigne, Office of Exemption Determinations, Pension and Welfare Benefits Administration, U.S. Department of Labor, (202) 693–8540 (This is not a toll-free number).

SUPPLEMENTARY INFORMATION: Notice is hereby given of the pendency before the Department of a proposed amendment to PTE 96–62. PTE 96–62 provides relief from a restriction described in sections 406(a) and 406(b) of the Employee Retirement Income Security Act (ERISA or the Act) or a parallel restriction described in section 8477(c)(2) of the Federal Employees' Retirement Systems Act (FERSA), and from the taxes imposed by section 4975(a) and (b) of the Internal Revenue Code of 1986 (the Code), by reason of a parallel provision described in section 4975(c)(1)(A) through (F) of the Code. The Department is proposing this amendment to PTE 96–62, on its own motion pursuant to section 408(a) of ERISA and section 4975(c)(2) of the Code and in accordance with the procedures set forth in 29 CFR part 2570, subpart B (55 FR 32836, August 10, 1990).[1]

Background

The rules set forth in section 406 of ERISA prohibit various transactions between employee benefit plans covered by Title I of ERISA and certain related parties, unless a statutory or administrative exemption applies to the transaction. These related parties, such as plan fiduciaries, sponsoring employers, unions and service providers are defined as parties in interest in section 3(14) of ERISA, and, in the absence of an exemption, may not engage in transactions described in section 406 of ERISA with a plan.

Specifically, section 406(a)(1) prohibits a fiduciary of a plan from causing the plan to engage in a transaction that constitutes a direct or an indirect: sale, exchange or leasing of any property between the plan and a party in interest; lending of money or other extension of credit between the plan and a party in interest; furnishing of goods, services or facilities between the plan and a party in interest; transfer to, or use by or for the benefit of a party in interest of any assets of the plan or acquisition on behalf of the plan of any employer security or real property in violation of section 407(a) of ERISA. Section 406(a)(2) provides that no fiduciary who has authority or discretion to control or manage plan assets shall permit the plan to hold any employer security or employer real property if he knows or should know that holding such security or real property violates section 407(a) of ERISA. Section 406(b) prohibits a fiduciary, with respect to a plan, from dealing with the assets of the plan in his own interest or for his own account; acting in his individual capacity or in any other capacity in any transaction involving the plan on behalf of a party (or representing a party) whose interests are adverse to the interests of the plan or interests of the participants or beneficiaries; and receiving any consideration for his own personal account from any party dealing with such plan in connection with a transaction involving the assets of the plan. In addition, such transactions that involve plans described in section 4975(e)(1) of the Code are generally subject to taxation under section 4975 of the Code. Lastly, the restrictions of section 8477(c)(2) of FERSA parallel section 406(b) of ERISA.

The Department has frequently exercised its statutory authority under section 408(a) of ERISA to grant both individual and class exemptions from the restrictions imposed by section 406 of ERISA where it has been able to find that the statutory criteria have been met.[2] This process has been helpful in providing exemptive relief for transactions which were prohibited, but were otherwise in the interests of the plans, participants and beneficiaries.

The Department has promulgated an exemption procedure[3] which provides, among other things, that an exemption will not be granted until a notice of pendency has been published in the **Federal Register**, and interested persons have been given an opportunity to comment on the proposed transaction. Following consideration of the entire record, the Department then makes its final determination whether to grant the exemption. If the Department contemplates not granting the requested exemption, the procedure also provides an applicant with the right to a conference.

Based on its experience in considering exemption applications, the Department has observed that many of the applications present routine transactions involving terms, conditions and circumstances which are substantially similar to those described

[1] Section 102 of Reorganization Plan No. 4 of 1978 (5 U.S.C. App. 1 (1996)) generally transferred the authority of the Secretary of the Treasury to issue administrative exemptions under section 4975(c)(2) of the Code to the Secretary of Labor.

[2] Section 408(a) of ERISA provides, in part, that the Department may not grant an exemption unless a finding is made that such exemption is administratively feasible, in the interests of the plan and of its participants and beneficiaries of such plan and protective of the rights of participants and beneficiaries of such plan.

[3] See 29 CFR part 2570, subpart B (55 FR 32836, August 10, 1990).

in previously granted individual exemptions. In fact, many exemption applicants have made it a practice to consult previously granted exemption files in the preparation of their submissions. Such applicants often submit applications containing nearly identical transactions, terms and conditions to those previously granted. Since the enactment of ERISA, the Department has exempted a large number of recurring transactions, including loans, leases and sales of real property. As a result, standard terms and conditions have developed over time which assure that the transaction is protective of the plan's interest.

The Department granted PTE 96–62 in 1996, in an effort to reduce regulatory burdens associated with processing individual exemptions from the prohibited transaction provisions of ERISA. Effective July 31, 1996, PTE 96–62 provides a mechanism for expediting consideration of those routine transactions which are similar to those that have been previously considered by the Department in prior exemption proceedings, without sacrificing the interests of the plan participants and beneficiaries. Accordingly, the exemption is available to a party proposing to engage in a prohibited transaction, if the party can demonstrate to the Department that such transaction and the material terms, conditions and representations therein are substantially similar to at least two individual exemptions previously granted by the Department.

Section I of PTE 96–62 provides relief from certain of the restrictions described in section 406(a) of ERISA and from the taxes imposed by section 4975(a) and (b) of the Code, by reason of a parallel provision described in section 4975(c)(1)(A) through (D) of the Code, for a transaction between a plan and a party in interest with respect to such plan, provided the conditions of the exemption are met. Under section II, additional relief is provided from certain of the restrictions described in section 406(b) of ERISA and the parallel restrictions described in section 8477(c)(2) of FERSA, as well as from the taxes imposed by section 4975(a) and (b) of the Code, by reason of a parallel provision described in section 4975(c)(1)(E) and (F). Sections I(a) and II(a) require that the transaction be substantially similar (as defined in section IV(a) of PTE 96–62) to transactions described in at least two individual exemptions that were granted by the Department, and which provided relief from the same restrictions as requested by the party, within the 60-month period ending on the date of filing of the written submission.[4]

As a result of the program's success, the number of requests for individual exemptions relating to routine transactions has decreased. Thus, the Department is concerned that, in the near future, parties wishing to seek authorization for transactions pursuant to PTE 96–62 will not be able to find two substantially similar individual exemptions which were granted by the Department within the required 60-month time period.[5] Accordingly, in order to assist parties who in the future wish to utilize the exemptive relief provided by PTE 96–62, the Department is proposing to expand Sections I(a) and II(a) to permit parties to either base their submission on substantially similar transactions described in two individual exemptions granted within the past 60-months; or on one individual exemption granted within the past 120-months and one transaction which received final authorization by the Department under PTE 96–62 within the past 60-months (the Authorized Transaction). The Department believes that the alternate method for satisfying the requirements of sections I(a) and II(a) will continue to ensure that the transactions that the party compares to its proposed transaction reflect the current policies of the Department.

As of November 2001, over 160 transactions have been authorized by the Department under PTE 96–62. The Department maintains, on its website (*www.dol.gov/dol/pwba/public/programs/oed/oednew20.htm*) a list of Authorized Transactions. This list includes the following information: the final authorization numbers, the name of the applicants, a description of the transactions, and the grant numbers and **Federal Register** citations of the exemptions on which the submissions were based. Parties wishing to base their submission on an Authorized Transaction will be able to refer to the submission previously filed by parties under PTE 96–62 and to the two granted individual exemptions identified as substantially similar for additional information regarding the subject transactions.[6]

The Department notes that all other conditions contained in PTE 96–62 must continue to be satisfied with respect to those parties seeking to base their submission on an Authorized Transaction rather than on two substantially similar individual exemptions. Accordingly, these parties should submit, among other things, a comparison of the proposed transaction with the Authorized Transaction and the transaction which was the subject of the individual exemption, including an explanation as to why any differences should not be considered material.

General Information

The attention of interested persons is directed to the following:

(1) The fact that a transaction is the subject of an exemption under section 408(a) of the Act and section 4975(c)(2) of the Code does not relieve a fiduciary or other party in interest or disqualified person from certain other provisions of ERISA and the Code to which the exemption does not expressly apply and the general fiduciary provisions of section 404 of ERISA. Section 404 requires, in part, that a fiduciary discharge his or her duties respecting the plan solely in the interest of participants and beneficiaries of the plan and in a prudent fashion in accordance with section 404(a)(1)(B) of ERISA. This exemption, if granted does not affect the requirement of section 401(a) of the Code that a plan must operate for the exclusive benefit of the employees of the employer maintaining the plan and their beneficiaries;

(2) Before any exemption may be granted under section 408(a) of ERISA and section 4975(c)(2) of the Code, the Department must find that the exemption is administratively feasible, in the interests of the plan(s) and of participants and beneficiaries, and protective of the rights of the participants and beneficiaries of the plan(s);

(3) This proposed amendment is supplemental to and not in derogation of any other provisions of ERISA or the Code, including statutory or administrative exemptions and transitional rules. Furthermore, the fact that a transaction is subject to an administrative or statutory exemption is not dispositive of whether the transaction is in fact a prohibited transaction; and

(4) If granted, the proposed amendment will be applicable to a transaction only if the transaction

[4] Section IV(a) defines the term ''substantially similar'' to mean alike in all material respects as determined by the Department, in its sole discretion.

[5] In this regard, transactions which are authorized pursuant to PTE 96–62 cannot be relied on by parties wishing to engage in similar transaction pursuant to PTE 96–62 because that exemption is limited to those transactions which were the subject of individual exemptions granted in accordance with the Department's exemption procedure.

[6] All files are available for public inspection at the Public Documents Room, Pension and Welfare Benefits Administration, U.S. Department of Labor, Room N–1513, 200 Constitution Ave., NW, Washington, DC 20210.

satisfies the conditions specified in the class exemption.

Written Comments and Requests for Hearing

All interested persons are invited to submit written comments or requests for a public hearing on the proposed amendment to the address or the fax number noted above within the time period set forth above. All comments received will made a part of the record of this proceeding and will be available for public inspection.

Proposed Amendment

Under the authority of section 408(a) of ERISA and section 4975(c)(2) of the Code, and in accordance with the procedures set forth in 29 CFR 2570, subpart B (55 FR 32836, August 10, 1990), the Department proposes to amend PTE 96–62 as set forth below:

(1) Section I(a) is amended to read ''The transaction is substantially similar (as defined in section IV(a) to transactions described in: (a) At least two individual exemptions that were granted by the Department, and provided relief from the same restriction, within the 60-month period ending on the date of filing of the written submission referred to in section III(a); or (b) one individual exemption that was granted by the Department, and provided relief from the same restriction, within the 120-month period ending on the date of filing the written submission referred to in section III(a), and at least one Authorized Transaction (as defined in section IV(g));''

(2) Section II(a) is amended to read ''The transaction is substantially similar (as defined in section IV(a) to transactions described in: (a) At least two individual exemptions that were granted by the Department, and provided relief from the same restriction, within the 60-month period ending on the date of filing of the written submission referred to in section III(a); or (b) one individual exemption that was granted by the Department, and provided relief from the same restriction, within the 120-month period ending on the date of filing the written submission referred to in section III(a), and at least one Authorized Transaction (as defined in section IV(g));''

(3) Section III(a)(4) is amended to read ''a comparison of the proposed transaction to at least two substantially similar transactions which were the subject of individual exemptions granted by the Department, or an individual exemption granted by the Department and an Authorized Transaction, and an explanation as to why any differences should not be considered material for purposes of this exemption;''

(4) Section IV(b)(6) is amended to read ''the Federal Register citations for the prior exemption(s) and/or the final authorization number of the Authorized Transaction (including the related Federal Register citations for the prior exemptions cited therein)identified by the party as substantially similar to the contemplated transaction.''

(5) Section IV(g) is added to read: ''The term Authorized Transaction means a transaction that has received final authorization pursuant to PTE 96–62 within a 60-month period ending on the date of the filing of the written submission referred to in section III(a).''

Signed at Washington, DC this 15th day of March 2002.

Ivan L. Strasfeld,

Director, Office of Exemption Determinations, Pension and Welfare Benefits Administration, U.S. Department of Labor.

[FR Doc. 02–6770 Filed 3–19–02; 8:45 am]

BILLING CODE 4520–29–P

MORRIS K. UDALL SCHOLARSHIP AND EXCELLENCE IN NATIONAL ENVIRONMENTAL POLICY FOUNDATION

The United States Institute for Environmental Conflict Resolution; Agency Information Collection Activities; Extension of Currently Approved Information Collection; Comment Request; Application for the National Roster of Environmental Dispute Resolution and Consensus Building Professionals

AGENCY: Morris K. Udall Scholarship and Excellence in National Environmental Policy Foundation, U.S. Institute for Environmental Conflict Resolution.

ACTION: Notice.

SUMMARY: In compliance with the Paperwork Reduction Act and supporting regulations, this document announces that the U.S. Institute for Environmental Conflict Resolution (the Institute), part of the Morris K. Udall Foundation, is planning to submit to the Office of Management and Budget (OMB) a request for an extension for the currently approved information collection (ICR), OMB control Number 2010–0030: Application for the National Roster of Environmental Dispute Resolution and Consensus Building Professionals (''National Roster of ECR Practitioners''), currently operating pursuant to Terms of Clearance issued July 29, 1999. Before submitting the extension to OMB for review and approval, the Institute is soliciting comments regarding the information collection (see section C. below entitled ''Questions to Consider in Making Comments''). This document provides information on the continuing need for the Roster of ECR Practitioners Application and the information recorded in the application.

DATES: Comments must be submitted on or before May 20, 2002.

ADDRESSES: Direct comments and requests for information, including copies of the ICR to: Joan C. Calcagno, Roster Manager: U.S. Institute for Environmental Conflict Resolution, 110 South Church Avenue, Suite 335o, Tucson, Arizona 85701. Fax: 520–670–5530. Phone: 520–670–5299. E-mail: *roster@ecr.gov*

FOR FURTHER INFORMATION CONTACT: Joan C. Calcagno, Roster Manager: U.S. Institute for Environmental Conflict Resolution, 110 South Church Avenue, Suite 335o, Tucson, Arizona 85701. Fax: 520–670–5530. Phone: 520–670–5299. E-mail: *roster@ecr.gov*

SUPPLEMENTARY INFORMATION:

A. Title for the Collection of Information

Application for National Roster of Environmental Dispute Resolution and Consensus Building Professionals (''National Roster of ECR Practitioners'').

B. Potentially Affected Persons

You are potentially affected by this action if you are a dispute resolution or consensus building professional in the environmental or natural resources field who wishes to be listed on the National Roster of Environmental Dispute Resolution and Consensus Building Professionals.

C. Questions To Consider in Making Comments

The U.S. Institute for Environmental Conflict Resolution requests your comments to any of the following questions related to collecting information for the extension of the Application for the National Roster of ECR Practitioners:

(1) Is the continued use of the application (''collection of information'') necessary for the proper performance of the functions of the agency, including whether the information has practical utility?

(2) Is the agency's estimate of the time spent completing the application (''burden of the proposed collection of information'') accurate, including the validity of the methodology and assumptions used?

(3) Can you suggest ways to enhance the quality, utility, and clarity of the information collected?

(4) Can you suggest ways to minimize the burden of the collection of information on those who are to respond, including through the use of appropriate automated electronic, mechanical, or other technological collection techniques or other forms of information technology?

D. Abstract

The U.S. Institute for Environmental Conflict Resolution plans to continue collecting information from environmental dispute resolution and consensus building neutral professionals who desire to become members of the National Roster of ECR Practitioners, from which those involved in environmental, natural resource, or public lands disputes may locate providers of neutral services. Responses to the collection of information (the application) are voluntary, but required to obtain a benefit (listing on the National Roster of Environmental Dispute Resolution and Consensus Building Professionals.) An agency may not conduct or sponsor, and a person is not required to respond to, a collection of information unless it displays a currently valid OMB control number.

Background Information: U.S. Institute for Environmental Conflict Resolution

The U.S. Institute for Environmental Conflict Resolution was created in 1998 by the Environmental Policy and Conflict Resolution Act (P.L. 105–156). The U. S. Institute is a federal program established by the U. S. Congress to assist parties in resolving environmental, natural resource, and public lands conflicts. The Institute is part of the Morris K. Udall Foundation, an independent federal agency of the executive branch overseen by a board of trustees appointed by the President. The Institute serves as an impartial, non-partisan institution providing professional expertise, services, and resources to all parties involved in such disputes, regardless of who initiates or pays for assistance. The Institute helps parties determine whether collaborative problem solving is appropriate for specific environmental conflicts, how and when to bring all the parties to the table, and whether a third-party facilitator or mediator might be helpful in assisting the parties in their efforts to reach consensus or to resolve the conflict. In addition, the Institute maintains the National Roster of ECR Practitioners, a roster of qualified facilitators and mediators with substantial experience in environmental conflict resolution, and can help parties in selecting an appropriate neutral. The Institute accomplishes most of its work by partnering, contracting with, or referral to, experienced practitioners.

The Need for and Use of the Information Collected in the Application for the Roster of ECR Practitioners

Roster of ECR Practitioners Application: The application can be viewed on-line from the Institute's website: www.ecr.gov (simply register in the system to access and review an application). A hardcopy application may also be obtained from the Institute for those without web access. (see contact information above.)

Background Information: The information collected in the application for the National Roster of ECR Practitioners is the basis for an on-line database, searchable by a combination of 10 criteria designed to locate appropriate practitioners by matching desired characteristics with the information in the application. The application was first available in September 1999 and remains available on a continuous basis. The Roster of ECR Practitioners first became operational in February 2000 with 60 members and currently includes over 190 members from 40 states, the District of Columbia, and 2 Canadian provinces. They represent a broad cross-section of 31 different professional backgrounds and a broad distribution of case experience across 39 types of case issues. Each member has documented experience which meets the roster entry criteria, and each has experience as a neutral in some or all of the following: mediation, facilitation, consensus building, process design, conflict assessment, system design, neutral evaluation/fact finding, superfund allocation, and/or regulatory negotiation.

The specific entry criteria and applicable definitions are available from the Institute's web site: *www.ecr.gov*. Generally stated, the entry criteria require that an applicant has:

(1) Served as the lead neutral in a collaborative process (e.g., mediation, consensus building, conflict assessment) for at least 200 case hours in two to ten environmental cases, and

(2) Accumulated a total of 60 points across three categories: additional case experience and complex case experience; experience as a trainer or trainee; and substantive work/volunteer/educational experience in fields related to Alternative Dispute Resolution/Environmental Conflict Resolution, such as law, science, public administration.

Use of the National Roster of ECR Practitioners: The roster search and referral service is accessible through the Institute. The Institute uses the roster (specifically the information collected in the application) as a resource when making referrals to those searching for neutral ECR professionals with specific experience, backgrounds, or expertise (external referrals). The Institute also uses the roster as a resource when locating appropriate ECR neutral professionals with whom to partner/sub-contract for projects in which the Institute is involved (internal referrals). The roster referral system is enhanced through cooperation with existing programs and networks of environmental dispute-resolution and consensus-building practitioners familiar with the issues in their respective states and regions. Twenty-one EPA ADR Specialists also have direct, electronic access to search the roster. Next, it is anticipated that other federal agencies will gain direct access over the next year. Eventually, the roster will be available to the public through the internet.

Federal agencies are not required to select from the roster. Professionals not on the roster remain fully eligible to serve as ECR practitioners in disputes involving federal agencies. Finally, being listed on the roster does not guarantee additional work for the practitioner.

Development and Need for the National Roster of ECR Practitioners: The roster was developed with the support of the Environmental Protection Agency (EPA). Based on a 1997 study concerning the potential of a national roster of qualified practitioners, EPA decided to support the development of such a roster through the Institute.

To develop the project, the EPA and the Institute brought together a work group consisting of EPA dispute resolution professionals and contracting officers, state dispute resolution officials, private dispute resolution practitioners and academics. Informed in part by ideas from this group, the EPA and the Institute proposed roster entry qualifications and draft application, which were published in the **Federal Register** in November 1998. Before the entry criteria and application were finalized, the comments received in response to the **Federal Register** notice were reviewed. Outreach continued through meetings and newsletter articles, as well as individual communications to professional associations, state and federal government agencies, dispute resolution

firms, individual practitioners, professional associations of attorneys, environmental and citizen groups.

The roster was created, and continues to be needed, for several reasons. The use of Alternative Dispute Resolution (ADR) in the environmental and public policy arena has grown markedly over the last two decades. In this context, ADR processes now include techniques ranging from conflict prevention, such as consensus building and facilitation of public policy dialogues, to specific dispute resolution through assisted negotiations and mediation. The number of environmental conflict resolution (ECR) practitioners has grown as the field has gained prominence and professionals from a variety of disciplines have become attracted to its advantages and opportunities.

An essential step in any dispute resolution process occurs when parties select a practitioner. Parties making the selection rightfully expect that the practitioner will be qualified to provide the service sought and has experience and style matched well to the nature of the issues and to the parties. Thus, the Roster of ECR Practitioners is designed to advance the interests of the growing field of dispute resolution, reflect the evolving standards of best practice, and help direct the expenditure of public funds for quality services.

Over the last fifteen years of using ADR, EPA found that parties to a dispute or controversy will generate a list of desired characteristics, such as experience with specific types of issues, cases or disputes, location, and other factors, that will be used in an attempt to identify the right person to assist them. Locating practitioners meeting these criteria can be a ''hit-or-miss'' experience depending on the resources, available time, and experience of the parties with locating appropriate neutrals.

Although the EPA operates a national service contract that manages major cases through a list of experienced providers, it is limited in scope and membership, and as a consequence it can be burdensome to use for identifying neutrals for small or localized cases. Most other Federal agencies have no vehicle or information available to assist in this important first step to conducting a good dispute resolution process.

More specifically, the National Roster of ECR Practitioners is necessary for the proper performance of the Institute's goals: to resolve Federal environmental disputes in a timely and constructive manner; to increase the appropriate use of environmental conflict resolution; to improve the ability of Federal agencies and other interested parties to engage in ECR effectively; and to promote collaborative problem-solving and consensus-building during the design and implementation of Federal environmental policies so as to prevent and reduce the incidence of future environmental disputes.

In addition, the U.S. Institute's enabling legislation directs the Institute to work with practitioners located near the conflict whenever practical. Consistent with this mandate, the Institute must be able to identify appropriate experienced dispute resolution and conciseness building professionals in an efficient manner.

Finally, the Administrative Dispute Resolution (AADR@) Act of 1996 (5 U.S.C. 571, et. seq.) authorizes the Federal government to contract with dispute resolution professionals (*e.g.*, facilitators or mediators) to assist it and other parties to disputes or issues in controversy in reaching an agreement, settlement, or consensus. The ADR Act authorizes the government to take steps to make identifying and contracting with neutrals easier (cf. 5 U.S.C. 573(c)).

Thus, the goal of the National Roster of ECR Practitioners and the referral system is to improve access to qualified environmental dispute resolution and consensus building professionals for the Institute and others sponsoring or engaging in environmental conflict resolution processes. The roster expedites the identification of appropriate professionals, shortens the time needed to complete contracting documents, and helps refer parties to practitioners, particularly practitioners in the locale of the dispute.

More specifically, the roster and the referral system provide an efficient, credible and user-friendly source from which to systematically identify experienced environmental neutral professionals; increase the use of collaborative processes by providing a useful tool for locating appropriate practitioners; and provide users with a detailed Practitioner Profiles, reflecting information contained in the application, to be used as a helpful first step in the process of selecting an appropriate neutral.

E. Burden Statement

The application compiles data available from the resumes of dispute resolution and consensus building professionals into a format that is standardized for efficient and fair eligibility review, database searches, and retrievals. A professional needs to complete the form only one time. Once the application is approved, the roster member has continual access to his or her on-line account to update information, on a voluntary basis. The burden includes time spent to review instructions, review resume information, and enter the information in the form.

Likely Respondents: Environmental dispute resolution and consensus building professionals (new respondents); existing roster members (for updating)

Proposed Frequency of Response: one, with voluntary updates approximately once per year.

Estimated Number of New Respondents (first extension year): 30.

Estimated Number of Existing Respondents—for updating (first extension year): 125.

Estimated Number of New Respondents (per year for succeeding year): 30.

Estimated Number of Existing Respondents-for updating (per year for succeeding year): 125.

Respondent Time Burden Estimates

Estimate Time per New Response: 150 minutes (2.5 hours).

Estimated Number of Updates (per year): 1, for 125 existing respondents.

Estimated Time for Update: 15 minutes.

Estimated Total First Extension Year Burden: 4500 minutes (75 hours) (30 new respondents); 1875 minutes (31.25 hours)(125 updates).

Estimated Total Subsequent Year Annual Burden: 4500 minutes (75 hours) (30 new respondents); 1875 minutes (31.25 hours)(125 updates).

Respondent Cost Burden Estimates (at $150. per hour)

No Capital Or Start-Up Costs

Estimated Cost per Respondent (first extension year): $375 (new respondents); 38 (update).

Estimated Cost per Respondent (subsequent year): $375 (new respondents); 38 (update).

Estimated Total First Extension Year Burden: $11,250 (new respondents); $4,750 (updates).

Estimated Total Subsequent Year annual Bur $11,250 (new respondents); $4,750 (updates).

Burden means the total time, effort, or financial resources expended by persons to generate, maintain, retain, or disclose or provide information to or for a Federal agency. This includes the time needed to review instructions; develop, acquire, install, and utilize technology and systems for the purpose of collecting, validating, and verifying information, processing and maintaining information, and disclosing

and providing information and transmitting information.

(Authority: 20 U.S.C. Sec. 5601–5609)

Dated the 14th day of March, 2002.

Christopher L. Helms,

Executive Director, Morris K. Udall Foundation.

[FR Doc. 02–6684 Filed 3–19–02; 8:45 am]

BILLING CODE 6820–FN–P

NATIONAL ARCHIVES AND RECORDS ADMINISTRATION

Records Schedules; Availability and Request for Comments

AGENCY: National Archives and Records Administration (NARA).

ACTION: Notice of availability of proposed records schedules; request for comments.

SUMMARY: The National Archives and Records Administration (NARA) publishes notice at least once monthly of certain Federal agency requests for records disposition authority (records schedules). Once approved by NARA, records schedules provide mandatory instructions on what happens to records when no longer needed for current Government business. They authorize the preservation of records of continuing value in the National Archives of the United States and the destruction, after a specified period, of records lacking administrative, legal, research, or other value. Notice is published for records schedules in which agencies propose to destroy records not previously authorized for disposal or reduce the retention period of records already authorized for disposal. NARA invites public comments on such records schedules, as required by 44 U.S.C. 3303a(a).

DATES: Requests for copies must be received in writing on or before May 6, 2002. Once the appraisal of the records is completed, NARA will send a copy of the schedule. NARA staff usually prepare appraisal memorandums that contain additional information concerning the records covered by a proposed schedule. These, too, may be requested and will be provided once the appraisal is completed. Requesters will be given 30 days to submit comments.

ADDRESSES: To request a copy of any records schedule identified in this notice, write to the Life Cycle Management Division (NWML), National Archives and Records Administration (NARA), 8601 Adelphi Road, College Park, MD 20740–6001. Requests also may be transmitted by FAX to 301–713–6852 or by e-mail to *records.mgt@nara.gov.* Requesters must cite the control number, which appears in parentheses after the name of the agency which submitted the schedule, and must provide a mailing address. Those who desire appraisal reports should so indicate in their request.

FOR FURTHER INFORMATION CONTACT: Marie Allen, Director, Life Cycle Management Division (NWML), National Archives and Records Administration, 8601 Adelphi Road, College Park, MD 20740–6001. Telephone: (301) 713–7110. E-mail: *records.mgt@nara.gov.*

SUPPLEMENTARY INFORMATION: Each year Federal agencies create billions of records on paper, film, magnetic tape, and other media. To control this accumulation, agency records managers prepare schedules proposing retention periods for records and submit these schedules for NARA's approval, using the Standard Form (SF) 115, Request for Records Disposition Authority. These schedules provide for the timely transfer into the National Archives of historically valuable records and authorize the disposal of all other records after the agency no longer needs them to conduct its business. Some schedules are comprehensive and cover all the records of an agency or one of its major subdivisions. Most schedules, however, cover records of only one office or program or a few series of records. Many of these update previously approved schedules, and some include records proposed as permanent.

No Federal records are authorized for destruction without the approval of the Archivist of the United States. This approval is granted only after a thorough consideration of their administrative use by the agency of origin, the rights of the Government and of private persons directly affected by the Government's activities, and whether or not they have historical or other value.

Besides identifying the Federal agencies and any subdivisions requesting disposition authority, this public notice lists the organizational unit(s) accumulating the records or indicates agency-wide applicability in the case of schedules that cover records that may be accumulated throughout an agency. This notice provides the control number assigned to each schedule, the total number of schedule items, and the number of temporary items (the records proposed for destruction). It also includes a brief description of the temporary records. The records schedule itself contains a full description of the records at the file unit level as well as their disposition. If NARA staff has prepared an appraisal memorandum for the schedule, it too includes information about the records. Further information about the disposition process is available on request.

Schedules Pending

1. Department of the Air Force, Office of the Secretary (N1-AFU–02–1, 2 items, 1 temporary item). Electronic copies created using electronic mail and word processing of appointment books, daily schedules, and telephone logs of the Secretary of the Air Force, November 1997 to January 2001. Recordkeeping copies of these files are proposed for permanent retention.

2. Department of Defense, Joint Staff and Combatant Commands (N1–218–00–6, 132 items, 59 temporary items). Facilitative records relating to operations, planning, and command and control matters accumulated by the Joint Staff and combatant commands. Included are reports, correspondence, summaries, case files, background papers, drafts, transcripts, publications, minutes of meetings, and other files pertaining to such matters as military readiness, special and regular operations, exercises, plans, codewords, crisis incidents, reconnaissance, surveillance, war games, alerts, strategic weapons failures, space and satellite operations, aerospace, and antiterrorism. Also included are electronic copies of documents created using electronic mail and word processing and electronic systems maintained at combatant commands that feed into systems maintained at higher levels. Recordkeeping copies of such files as operations and readiness policies and reports, directives, lessons learned, crisis incident action books, emergency planning policies and procedures, and publications are proposed for permanent retention.

3. Department of Defense, Joint Staff and Combatant Commands (N1–218–00–7, 51 items, 33 temporary items). Records relating to logistics, supply services, and budget matters accumulated by the Joint Staff and combatant commands. Included are reports, correspondence, case files, background papers, drafts, transcripts, publications, minutes of meetings, and other records pertaining to such matters as routine logistics and mobilization activities, general budget and financial management, payroll, procurement, space management, travel, transportation, and safety and maintenance activities. Also included are electronic copies of documents created using electronic mail and word

processing and electronic systems maintained at combatant commands that feed into systems maintained at higher levels. Recordkeeping copies of files relating to such matters as policies and procedures, oversight and assessments, and high-level budget activities are proposed for permanent retention.

4. Department of Defense, Joint Staff and Combatant Commands (N1–218–00–10, 61 items, 46 temporary items). Records relating to general administration and management accumulated by the Joint Staff and combatant commands. Included are such records as reports, correspondence, summaries, case files, background papers, drafts, transcripts, publications, and minutes of meetings. Files pertain to such matters as general office operations, standard operating procedures, the preparation of reports and plans, publications, forms management, investigations, audits and surveys, routine studies, agreements, and records management. Also included are electronic copies of documents created using electronic mail and word processing and electronic systems maintained at combatant commands that feed into systems maintained at higher levels. Recordkeeping copies of such files as indexes to permanent records, official studies, schedules of high officials, significant investigations, audiovisual records, administrative orders, and meeting/conference records are proposed for permanent retention.

5. Department of Defense, Joint Staff and Combatant Commands (N1–218–00–11, 44 items, 43 temporary items). Records relating to information technology accumulated by the Joint Staff and combatant commands. Included are reports, correspondence, directives, plans, memorandums, case files, background papers, drafts, transcripts, publications, minutes of meetings, and other files pertaining to such matters as the planning, procurement, testing, security, operation, and maintenance of information technology systems. Also included are electronic copies of documents created using electronic mail and word processing and electronic systems maintained at combatant commands that feed into systems maintained at higher levels. Recordkeeping copies of technical documentation relating to records scheduled for transfer to the National Archives are proposed for permanent retention.

6. Department of State, Bureau of Human Resources (N1–59–00–12, 12 items, 10 temporary items). Project working papers, legislative files, and labor management case files. Also included are electronic copies of documents created using electronic mail and word processing. Proposed for permanent retention are personnel policy historical files and reports relating to personnel policy and planning.

7. Department of State, Office of the Legal Advisor (N1–59–02–1, 2 items, 1 temporary item). Electronic copies of subject and country files of the Assistant Legal Advisor for Nonproliferation created using electronic mail and word processing. Recordkeeping copies of the files are proposed for permanent retention.

8. Environmental Protection Agency, Office of Prevention, Pollution, and Toxics (N1–412–01–5, 3 items, 2 temporary items). Paper records that relate to reporting information on chemicals or chemical mixtures under Section 8 of the Toxic Substances Control Act and have been microfilmed. Also included are electronic copies of documents created using electronic mail and word processing. Microfilm copies and paper records that have not been filmed, consisting of such documents as health studies, forms, and reports, are proposed for permanent retention.

9. Executive Office of the President, Office of National Drug Control Policy (N1–429–01–1, 43 items, 20 temporary items). Electronic copies of documents created using word processing. Proposed for permanent retention are the recordkeeping copies of such records as subject files of the director, deputy director, and other agency offices, the director's correspondence files and a related tracking system, and audio and video recordings.

10. Inter-American Foundation, Agency-wide (N1–454–02–1, 9 items, 7 temporary items). Records relating to activities of the Board of Directors and the President of the Foundation, including such files as copies of meeting minutes, correspondence, reports, public notices to Congress of grants under consideration by the Foundation, and electronic copies of documents created using electronic mail and word processing. Proposed for permanent retention are recordkeeping copies of minutes of meetings of the Board of Directors and Board of Directors policy files.

11. Inter-American Foundation, Office of the General Counsel (N1–454–02–2, 6 items, 6 temporary items). Records relating to activities of the Office of the General Counsel. Included are grant summaries, records of in-country legal assistance in support of grantees, and records of General Counsel participation in congressional budget hearings. Also included are electronic copies of documents created using electronic mail and word processing.

12. Inter-American Foundation, Office of Programs (N1–454–02–3, 3 items, 3 temporary items). Case files pertaining to grants awarded under the Foundation's Field Research Fellowship Program and U.S. Graduate Study Fellowship Program for Latin American and Caribbean Citizens. Also included are electronic copies of documents created using electronic mail and word processing.

13. Inter-American Foundation, Office of Budget and Financial Controls (N1–454–02–4, 4 items, 3 temporary items). Records relating to the administration of funding received from the Social Progress Trust Fund, including electronic copies of documents created using electronic mail and word processing. Proposed for permanent retention are recordkeeping copies of budget formulation and submission files.

14. Nuclear Regulatory Commission, Regional Offices (N1–431–00–20, 132 items, 96 temporary items). Electronic records in the Commission's Agencywide Document Access and Management System (ADAMS) accumulated by agency Regional Offices, including electronic copies of records created using office automation tools and of records used to create ADAMS portable document format files. Records proposed for disposal include electronic recordkeeping copies of records related to committees and conferences for which the agency is not the sponsor, enforcement case files that lack historical significance, fuel facilities docket case files, routine correspondence accumulated below the regional administrator level, operator licensing examination packages, licensee mismanagement files, nuclear material accountability worksheets, personnel exposure files, and radiation protection program records. Paper copies of these records were previously approved for disposal. Series proposed for permanent retention include recordkeeping copies of such files as emergency planning records, significant enforcement actions, selected fuel facilities docket case files, program correspondence accumulated at the regional administrator level, inspection and enforcement case files, and regulatory history files for proposed and final rulemaking.

15. Office of Personnel Management, Office of Administrative Law Judges (N1–478–02–2, 4 items, 4 temporary items). Electronic copies of administrative law judge qualifications files created using electronic mail and

word processing. This schedule also increases the retention period for recordkeeping copies of these files, which were previously approved for disposal.

Dated: March 8, 2002.

Michael J. Kurtz,

Assistant Archivist for Record Services—Washington, DC.

[FR Doc. 02–6636 Filed 3–19–02; 8:45 am]

BILLING CODE 7515–01–U

NATIONAL ARCHIVES AND RECORDS ADMINISTRATION

Nixon Presidential Historical Materials; Opening of Materials

AGENCY: National Archives and Records Administration.

ACTION: Notice of opening of materials.

SUMMARY: This notice announces the opening of additional files from the Nixon Presidential historical materials. Notice is hereby given that, in accordance with section 104 of Title I of the Presidential Recordings and Materials Preservation Act (PRMPA, 44 U.S. C. 2111 note) and 1275.42(b) of the PRMPA Regulations implementing the Act (36 CFR part 1275), the agency has identified, inventoried, and prepared for public access integral file segments among the Nixon Presidential historical materials.

DATES: The National Archives and Records Administration (NARA) intends to make these materials described in this notice available to the public beginning May 6, 2002. In accordance with 36 CFR 1275.44, any person who believes it necessary to file a claim of legal right or privilege concerning access to these materials should notify the Archivist of the United States in writing of the claimed right, privilege, or defense before April 19, 2002.

ADDRESSES: The materials will be made available to the public at the National Archives at College Park research room, located at 8601 Adelphi Road, College Park, Maryland beginning at 8:45 a.m. Researchers must have a NARA researcher card, which they may obtain when they arrive at the facility.

Petitions asserting a legal or constitutional right or privilege which would prevent or limit access must be sent to the Archivist of the United States, National Archives at College Park, 8601 Adelphi Road, College Park, Maryland 20740–6001.

FOR FURTHER INFORMATION CONTACT: Karl Weissenbach, Director, Nixon Presidential Materials Staff, 301–713–6950.

SUPPLEMENTARY INFORMATION: The integral file segments of textual materials to be opened on May 6, 2002, consist of 54 cubic feet. The White House Central Files Unit is a permanent organization within the White House complex that maintains a central filing and retrieval system for the records of the President and his staff. Some of the materials are from the White House Central Files, Subject Files. The Subject Files are based on an alphanumerical file scheme of 61 primary categories. Listed below are the integral file segments from the White House Central Files, Subject Files in this opening.

Subject Category

Volume: 8 cubic feet.

Federal Government (FG)

FG 93 President's Commission on Income Maintenance Program

FG 94 Commission on Marine Service, Engineering, and Resources

FG 106 District of Columbia

FG 150 Interstate Commerce Commission

FG 151 Joint Commission on Aging

FG 153 National Advisory Commission on Civil Disorders

FG 154 National Advisory Commission on Health Facilities

FG 155 National Advisory Committee on Libraries

FG 156 National Advisory Commission on Low Income Housing

FG 157 National Advisory Council on Adult Basic Education

FG 163 National Advisory Council on Vocational Education

FG 165 National Alliance of Businessmen

FG 222 Tax Court of the United States

FG 223 Temporary Commission on Pennsylvania Avenue

FG 224 Tennessee Valley Authority

In accordance with the provisions of Executive Order 12958, several series within the National Security Council files have been systematically reviewed for declassification and will be made available. In addition, a number of documents which were previously withheld from public access have been re-reviewed for release and or declassified under the provisions of Executive Order 12958, or in accordance with 36 CFR 1275.56 (Public Access Regulations).

National Security Council Files series:

Volume: 45 cubic feet.

A number of documents which were previously withheld from public access have been reviewed and/ or declassified under the Mandatory Review provisions of Executive Order 12958 and will be made available.

Previously restricted materials:

Volume: 1 cubic foot.

Public access to some of the items in the file segments listed in this notice will be restricted as outlined in 36 CFR 1275.50 or 1275.52 (Public Access Regulations).

Dated: March 13, 2002.

John W. Carlin,

Archivist of the United States.

[FR Doc. 02–6635 Filed 3–19–02; 8:45 am]

BILLING CODE 7515–01–P

NATIONAL COUNCIL ON DISABILITY

Advisory Committee Meeting/ Teleconference

AGENCY: National Council on Disability (NCD).

SUMMARY: This notice sets forth the schedule of the forthcoming meeting/ teleconference for NCD's Youth Advisory Committee, Notice of this meeting is required under section 10 (a)(1)(2) of the Federal Advisory Committee Act (Pub L. 92–463).

Youth Advisory Committee: The purposes of NCD's youth Advisory Committee is to provide input into NCD acitivites consistent with the values and goals of the Americans with Disabilities Act.

DATES: April 10, 2002, 4:00 p.m. EDT.

For youth advisory committee information, contact: Gerrie Drake Hawkins, Ph.D., Program Specialist, National Council on Disability, 1331 F Street NW, Suite 850, Washington, DC. 20004; 202–272–20004 (voice), 202–272–2074 (TTY), 202–272–2022 (fax), *ghawkins@ncd.gov* (e-mail).

AGENCY MISSION: The National Council on Disability is an independent federal agency composed of 15 members appointed by the President of the Untied States and confirmed by the U.S. Senate. Its overall purpose is to promote policies, programs, practices, and procedures that guarantee equal opportunity for all people with disabilities to achieve economic self-sufficiency, independent living, and inclusion and integration into all aspects of society.

This committee is necessary to provide advice and recommendations to NCD on disability issues.

We currently have a membership reflecting our nation's diversity and representing a variety of disabling conditions from across the United States.

Open Meeting: This advisory committee meeting/teleconference of the National Council on Disability will be open to the public. Those interested

in participating in the meeting/teleconference should contact the appropriate staff member listed above. Due to limited resources, only a few telephone lines will be available.

Records will be kept of all Youth Advisory Committee meetings/teleconferences and will be available after the meeting for public inspection at the National Council on Disaiblity.

Signed in Washington, DC, on March 15, 2002.

Ethel D. Briggs,

Executive Director.

[FR Doc. 02–6737 Filed 3–19–02; 8:45 am]

BILLING CODE 6820–MA–M

NUCLEAR REGULATORY COMMISSION

[Docket No. 50–286]

Entergy Nuclear Operations, Inc.; Notice of Withdrawal of Application for Amendment to Facility Operating License

The U.S. Nuclear Regulatory Commission (the Commission) has granted the request of Entergy Nuclear Operations, Inc. (the licensee) to withdraw its February 27, 2001, application for proposed amendment to Facility Operating License No. DPR–64 for the Indian Point Nuclear Generating Unit No. 2 (IP2), located in Westchester County, New York.

The proposed amendment would have revised the Technical Specifications (TSs) to change the mode applicability for certain engineered safety features and auxiliary electrical systems from the point of time when the reactor is made critical to when the average reactor coolant temperature is heated above 350 °F. The amendment would also have changed the associated action that must be taken when the TS conditions cannot be met to require a plant cooldown to below 350 °F.

The Commission had previously issued a Notice of Consideration of Issuance of Amendment published in the **Federal Register** on April 4, 2001 (66 FR 17965). However, by letter dated February 27, 2002, the licensee withdrew the proposed change.

Further details with respect to this action, see the application for amendment dated February 27, 2001, and the licensee's letter dated February 27, 2002, which withdrew the application for license amendment. Documents may be examined, and/or copied for a fee, at the NRC's Public Document Room, located at One White Flint North, 11555 Rockville Pike (first floor), Rockville, Maryland. Publicly available records will be accessible electronically from the Agencywide Documents Access and Management Systems (ADAMS) Public Electronic Reading Room on the internet at the NRC Web site, *http://www.nrc.gov/reading-rm.html.*

Persons who do not have access to ADAMS or who encounter problems in accessing the documents located in ADAMS, should contact the NRC Public Document Room (PDR) Reference staff by telephone at 1–800–397–4209, 301–415–4737 or by email to *pdr@nrc.gov.*

Dated at Rockville, Maryland, this 13th day of March 2002.

For the Nuclear Regulatory Commission.

Patrick D. Milano,

Sr. Project Manager, Section 1, Project Directorate, Division of Licensing Project Management, Office of Nuclear Reactor Regulation.

[FR Doc. 02–6689 Filed 3–19–02; 8:45 am]

BILLING CODE 7590–01–P

NUCLEAR REGULATORY COMMISSION

Advisory Committee on Reactor Safeguards: Subcommittee Meeting on Thermal-Hydraulic Phenomena; Notice of Meeting

The ACRS Subcommittee on Thermal-Hydraulic Phenomena will hold a meeting on April 23, 2002, Room T–2B3, 11545 Rockville Pike, Rockville, Maryland.

Portions of the meeting may be closed to public attendance to discuss General Electric proprietary information per 5 U.S.C. 552b(c)(4).

The agenda for the subject meeting shall be as follows: *Tuesday, April 23, 2002—8:30 a.m. until the conclusion of business.*

The Subcommittee will begin review of the application of the Carolina Power and Light Company for a core power uprate for the Brunswick Steam Electric Plant, Units 1 and 2. The purpose of this meeting is to gather information, analyze relevant issues and facts, and formulate proposed positions and actions, as appropriate, for deliberation by the full Committee.

Oral statements may be presented by members of the public with the concurrence of the Subcommittee Chairman. Written statements will be accepted and made available to the Committee. Electronic recordings will be permitted only during those portions of the meeting that are open to the public, and questions may be asked only by members of the Subcommittee, its consultants, and staff. Persons desiring to make oral statements should notify the Designated Federal Official named below five days prior to the meeting, if possible, so that appropriate arrangements can be made.

During the initial portion of the meeting, the Subcommittee, along with any of its consultants who may be present, may exchange preliminary views regarding matters to be considered during the balance of the meeting.

The Subcommittee will then hear presentations by and hold discussions with representatives of the NRC staff, the Carolina Power and Light Company, General Electric Nuclear Energy, and other interested persons regarding this review.

Further information regarding topics to be discussed, the scheduling of sessions open to the public, whether the meeting has been canceled or rescheduled, and the Chairman's ruling on requests for the opportunity to present oral statements and the time allotted therefor, can be obtained by contacting the Designated Federal Official, Mr. Paul A. Boehnert (telephone 301–415–8065) between 7:30 a.m. and 5 p.m. (EST). Persons planning to attend this meeting are urged to contact the above named individual one or two working days prior to the meeting to be advised of any potential changes to the agenda that may have occurred.

Dated: March 14, 2002.

Sher Bahadur,

Associate Director, for Technical Support.

[FR Doc. 02–6688 Filed 3–19–02; 8:45 am]

BILLING CODE 7590–01–P

NUCLEAR REGULATORY COMMISSION

Notice of Availability of Model Application Concerning Technical Specification Improvement To Eliminate Post Accident Sampling Requirements for Boiling Water Reactors Using the Consolidated Line Item Improvement Process

AGENCY: Nuclear Regulatory Commission.

ACTION: Notice of availability.

SUMMARY: Notice is hereby given that the staff of the Nuclear Regulatory Commission (NRC) has prepared a model application relating to the elimination of post accident sampling requirements for Boiling Water Reactors. The purpose of this model is to permit the NRC to efficiently process amendments that propose to remove requirements for Post Accident Sampling Stations (PASS) from

Technical Specifications (TS). Licensees of nuclear power reactors to which the model applies may request amendments utilizing the model application.

DATES: The NRC staff issued a **Federal Register** Notice (66 FR 66949, December 27, 2001) which provided a model safety evaluation (SE) and a model no significant hazards consideration (NSHC) determination relating to elimination of requirements for PASS for BWRs. The NRC staff hereby announces that the model SE and NSHC determination may be referenced in plant-specific applications to eliminate requirements for post accident sampling. The staff has posted a model application on the NRC web site to assist licensees in using the consolidated line item improvement process (CLIIP) to eliminate PASS-related TS. The NRC staff can most efficiently consider applications based upon the model application if the application is submitted within a year of this **Federal Register** Notice.

FOR FURTHER INFORMATION CONTACT: Robert Dennig, Mail Stop: O–12H4, Division of Regulatory Improvement Programs, Office of Nuclear Reactor Regulation, U.S. Nuclear Regulatory Commission, Washington, DC 20555–0001, telephone 301–415–1161.

SUPPLEMENTARY INFORMATION:

Background

Regulatory Issue Summary 2000–06, ''Consolidated Line Item Improvement Process for Adopting Standard Technical Specification Changes for Power Reactors,'' was issued on March 20, 2000. The CLIIP is intended to improve the efficiency of NRC licensing processes. This is accomplished by processing proposed changes to the standard technical specifications (STS) in a manner that supports subsequent license amendment applications. The CLIIP includes an opportunity for the public to comment on proposed changes to the STS following a preliminary assessment by the NRC staff and finding that the change will likely be offered for adoption by licensees. The CLIIP directs the NRC staff to evaluate any comments received for a proposed change to the STS and to either reconsider the change or to proceed with announcing the availability of the change for proposed adoption by licensees. Those licensees opting to apply for the subject change to TS are responsible for reviewing the staff's evaluation, referencing the applicable technical justifications, and providing any necessary plant-specific information. Each amendment application made in response to the notice of availability will be processed and noticed in accordance with applicable rules and NRC procedures.

This notice involves the elimination of requirements for PASS and related administrative controls in TS for BWRs. This proposed change was proposed for incorporation into the STS by the BWR Owners Group (BWROG) participants in the Technical Specification Task Force (TSTF) and is designated TSTF–413. TSTF–413 is supported by the NRC staff's SE dated June 12, 2001, for the BWROG topical report NEDO–32991, ''Regulatory Relaxation for BWR Post Accident Sampling Stations (PASS),'' which was submitted to the NRC on November 30, 2000. The BWROG request followed the staff's approval of similar requests for elimination of PASS requirements from the Combustion Engineering Owners Group (CEOG) and the Westinghouse Owners Group (WOG). TSTF–413 can be viewed on the NRC Web site, www.nrc.gov.

Applicability

This proposed change to remove requirements for PASS from TS (and other elements of the licensing bases) is applicable to BWRs.

To efficiently process the incoming license amendment applications, the staff requests each licensee applying for the changes addressed by TSTF–413 using the CLIIP to address the following plant-specific verifications and regulatory commitments. The CLIIP does not prevent licensees from requesting an alternative approach or proposing the changes without the requested verifications and regulatory commitments. Variations from the approach recommended in this notice may, however, require additional review by the NRC staff and may increase the time and resources needed for the review. In making the requested regulatory commitments, each licensee should address: (1) That the subject capability exists (or will be developed) and will be maintained; (2) where the capability or procedure will be described (*e.g.,* severe accident management guidelines, emergency operating procedures, emergency plan implementing procedures); and (3) a schedule for implementation. The amendment request need not provide details about designs or procedures.

Each licensee should verify that it has, and make a regulatory commitment to maintain (or make a regulatory commitment to develop and maintain):

a. Contingency plans for obtaining and analyzing highly radioactive samples from the reactor coolant system, suppression pool, and containment atmosphere;

b. A capability for classifying fuel damage events at the Alert level threshold (typically this is 300 μCi/ml dose equivalent iodine). This capability may use a normal sampling system or correlations of radiation readings to coolant concentrations; and

c. an I–131 site survey detection capability, including an ability to assess radioactive iodines released to offsite environs, by using effluent monitoring systems or portable sampling equipment.

Public Notices

In a notice in the **Federal Register** dated December 27, 2001 (66 FR 66949), the staff requested comment on the use of the CLIIP to process requests to delete post-accident sampling requirements from BWRs. The staff had previously issued a notice of availability (65 FR 65018, October 31, 2000) on the use of the CLIIP to process requests to delete post-accident sampling requirements from plants with Westinghouse and Combustion Engineering designs. The notice of availability for Westinghouse and Combustion Engineering plants followed the staff's disposition of comments received in response to a notice requesting comment (65 FR 49271, August 11, 2000). Each request to eliminate PASS requirements by licensees for Westinghouse and CE plants using the CLIIP has also included notices prior to issuance of the subject license amendments and upon issuance.

TSTF–413, as well as the NRC staff's safety evaluation and model application, may be examined, and/or copied for a fee, at the NRC/s Public Document Room, located at One White Flint North, 11555 Rockville Pike (first floor), Rockville, Maryland. Publicly available records are accessible electronically from the ADAMS Public Library component on the NRC Web site, (the Electronic Reading Room).

The staff did not receive comments following the notice soliciting comments about modifying the TS requirements regarding post accident sampling for BWRs. The staff has made some minor changes to the model safety evaluation as a result of internal reviews. A specific change involves the paragraph that read:

> The staff notes that redundant, safety-grade, containment hydrogen concentration monitors are required by 10 CFR 50.44(b)(1), are addressed in NUREG–0737 Item II.F.1 and Regulatory Guide 1.97, and are relied upon to meet the data reporting requirements of 10 CFR part 50, Appendix E, Section VI.2.a.(ii)(3). The staff concludes that during the early phases of an accident, the safety-grade hydrogen monitors provide an adequate capability for monitoring

containment hydrogen concentration. The staff sees value in maintaining the capability to obtain grab samples for complementing the information from the hydrogen monitors. * * *

The revised paragraph reads as follows:

The staff notes that containment hydrogen concentration monitors are required by 10 CFR 50.44 and are relied upon to meet the data reporting requirements of 10 CFR part 50, Appendix E, Section VI.2.a.(ii)(3). The staff concludes that these hydrogen monitors provide an adequate capability for monitoring containment hydrogen concentration during the early phases of an accident. The staff sees value in maintaining the capability to obtain grab samples for complementing the information from the hydrogen monitors. * * *

The change was made to reflect a likely revision to the requirements in 10 CFR 50.44 and does not significantly affect the technical basis of the staff's findings or revise the verifications and commitments identified in the model SE.

As described in the model application prepared by the staff, licensees may reference in their plant-specific applications to eliminate PASS-related TS the SE (as revised above), NSHC determination, and environmental assessment previously published in the **Federal Register** (66 FR 66949, December 27, 2001).

Dated at Rockville, Maryland, this 13th day of March 2002.

For the Nuclear Regulatory Commission.

William D. Beckner,

Program Director, Operating Reactor Improvements, Division of Regulatory Improvement Programs, Office of Nuclear Reactor Regulation.

[FR Doc. 02–6690 Filed 3–19–02; 8:45 am]

BILLING CODE 7590–01–P

SECURITIES AND EXCHANGE COMMISSION

[File No. 500–1]

A.C.L.N. Ltd.; Order of Suspension of Trading

It appears to the Securities and Exchange Commission (''Commission''), based on information provided to the Commission staff, that there is a lack of adequate and accurate information concerning the management, business practices and results of operations of A.C.L.N. Ltd. (''ACLN''), of Limassol, Cyprus and Antwerp, Belgium. The securities of ACLN are registered with the Commission pursuant to section 12(b) of the Securities Exchange Act of 1934 (''Exchange Act''). Its common stock is listed for trading on the New York Stock Exchange under the symbol ASW, and its options are traded through the Amex system. Information has been provided to the Commission staff raising concerns as to the adequacy and accuracy of ACLN's publicly disseminated information concerning, among other things, the following:

- The bases for ACLN's financial and other disclosure, as contained in its annual report on Form 20–F for the fiscal year ended December 31, 2000 (''2000 Form 20–F''), report on Form 6–K for the quarter ending September 30, 2001 and other public statements, concerning the revenue and income obtained by ACLN from its new car wholesale business, the volume of that business and the source of the cars sold;
- The bases for ACLN's financial and other public disclosure in its 2000 Form 20–F and in its December 21, 2001 press release concerning the ownership of the shipping vessel, the Sea Atef, and the bases under generally accepted accounting principles for claiming it as a $5.5 million asset, even though documents of title indicate that the vessel is jointly owned by persons or entities other than ACLN;
- The bases for ACLN's financial and other disclosure in its report on Form 6–K for the quarter ending September 30, 2001 concerning the revenue and income ACLN obtained from arranging the transportation of used cars, including its reported increase of approximately $60 million in revenue for the first nine months of 2001 over the same period of 2000;
- The bases for the statements in ACLN's February 5, 2002 press release announcing that it had acquired a majority interest in five companies, each of which owns a ''pure car and truck carrier vessel;''
- The business relationship and the nature of all financial transactions between ACLN and Matina Forwarding and Trading, also known as MFT;
- The source and subsequent use of funds claimed by ACLN as a corporate asset on its financial statements for the fiscal year ending December 31, 2000 and the fiscal quarter ending September 30, 2001, and deposited at the BNP Paribas Bank, Luxembourg; and
- The bases for the nondisclosure in any Commission filing the warrant issued by Tunisian authorities for the arrest of Abderrazak Labiadh, ACLN's President, CEO, and Managing Director, for allegedly misappropriating funds from a Tunisian company he founded.

The Commission is of the opinion that the public interest and the protection of investors require a suspension of trading in the securities of ACLN.

Therefore, it is ordered that, pursuant to section 12(k) of the Exchange Act, trading in the securities of ACLN is suspended for the period from 9:30 a.m. EST, March 18, 2002, through 11:59 p.m. EST, on April 1, 2002.

The Commission cautions broker-dealers and current and prospective holders of ACLN securities that they should carefully consider the foregoing information along with all other currently available information and any information subsequently issued by ACLN.

Further, brokers and dealers should be aware of the requirements of Rule 15c2–11 under the Exchange Act to the initiation of quotations at the termination of the trading suspension. Any broker or dealer having any questions as to whether or not the rule applies or whether the broker or dealer has complied with the rule should not enter any quotation but immediately contact the staff of the Securities and Exchange Commission in Washington, D.C.

Any broker or dealer uncertain as to what is required by Rule 15c2–11, should refrain from entering quotations relating to the securities of ACLN until such time as that broker or dealer is familiar with the rule and is certain that all of its provisions have been met. If any broker or dealer enters any quotation for the stock of ACLN that is in violation of the rule, the Commission will consider the need for prompt enforcement action.

By the Commission.

Jill M. Peterson,

Assistant Secretary.

[FR Doc. 02–6819 Filed 3–18–02; 11:42 am]

BILLING CODE 8010–01–M

SECURITIES AND EXCHANGE COMMISSION

[Release No. 34–45543; File No. SR–CBOE–2002–02]

Self-Regulatory Organizations; Notice of Filing of Proposed Rule Change by the Chicago Board Options Exchange, Inc. Relating to the Permanent Adoption of Decimal Pricing and the Establishment of Minimum Price Variations for Quoting in Equity Securities and Options

March 12, 2002.

Pursuant to section 19(b)(1) of the Securities Exchange Act of 1934 (''Act''),[1] and Rule 19b-4 thereunder,[2] notice is hereby given that on January

[1] 15 U.S.C. 78s(b)(1).

[2] 17 CFR 240.19b–4.

14, 2002, the Chicago Board Options Exchange, Inc. (''CBOE'' or ''Exchange'') filed with the Securities and Exchange Commission (''Commission'') the proposed rule change as described in Items I, II, and III below, which Items have been prepared by the CBOE. The Commission is publishing this notice to solicit comments on the proposed rule change from interested persons.

I. Self-Regulatory Organization's Statement of the Terms of Substance of the Proposed Rule Change

The CBOE proposes to amend its rules to establish minimum price variations (''MPVs''). The text of the proposed rule change is available at the CBOE and at the Commission.

II. Self-Regulatory Organization's Statement of the Purpose of, and Statutory Basis for, the Proposed Rule Change

In its filing with the Commission, the Exchange included statements concerning the purpose of, and basis for, the proposed rule change and discussed any comments it received on the proposed rule change. The text of these statements may be examined at the places specified in Item IV below. The Exchange has prepared summaries, set forth in Sections A, B, and C below, of the most significant aspects of such statements.

A. Self-Regulatory Organization's Statement of the Purpose of, and Statutory Basis for, the Proposed Rule Change

1. Purpose

On September 25, 2001, the Commission issued an order requiring the securities exchanges and the NASD to submit their own respective rule filings to establish MPVs for quoting equity securities and options by January 14, 2002.[3] The CBOE now proposes to formally adopt the MPVs currently in place on the Exchange.

As part of the industry conversion to decimal pricing and pursuant to the Decimals Implementation Plan for the Equities and Options Markets submitted to the Commission on July 26, 2000 (the ''Plan''),[4] the Exchange adopted the following MPV schedule for quoting: a five cent MPV for option issues quoted under $3 a contract; a ten cent MPV for option issues quoted at $3 a contract or greater; and a one cent MPV for the quoting of CBOE's equity products. The Plan, including the MPVs adopted under the Plan, remains in effect until the Commission approves rules submitted by each exchange and the NASD designating each market's MPVs. The Exchange seeks to designate the MPVs utilized under the Plan as its minimum increments.

The proposed rule change also provides that future changes to the Exchange's MPVs would be handled as they were handled before the conversion to decimal pricing, namely that the CBOE Board of Directors may determine to change the minimum increments and that the Exchange will designate any such change as a stated policy, practice, or interpretation with respect to the administration of the CBOE minimum increment rule for bids and offers (CBOE Rule 6.42) within the meaning of section 19(b)(3)(A) of the Exchange Act[5] and will file a rule change for effectiveness upon filing with the Commission. Lastly, the Exchange also seeks to formally eliminate CBOE Rule 15.11 (Mandatory Year 2000 Testing) and CBOE Rule 15.22 (Mandatory Decimal Pricing Testing), both of which have expired.

2. Statutory Basis

The Exchange believes that the proposed rule change is consistent with section 6(b) of the Act[6] in general, and furthers the objectives of section 6(b)(5) of the Act[7] in particular, in that it should promote just and equitable principles of trade, serve to remove impediments to and perfect the mechanism of a free and open market and a national market system, and protect investors and the public interest.

B. Self-Regulatory Organization's Statement on Burden on Competition

The Exchange does not believe that the proposed rule change will impose any burden on competition.

C. Self-Regulatory Organization's Statement on Comments on the Proposed Rule Change Received From Members, Participants, or Others

No written comments were solicited or received with respect to the proposed rule change.

III. Date of Effectiveness of the Proposed Rule Change and Timing for Commission Action

Within 35 days of the date of publication of this notice in the **Federal Register** or within such longer period (i) as the Commission may designate up to 90 days of such date if it finds such longer period to be appropriate and publishes its reasons for so finding, or (ii) as to which the Exchange consents, the Commission will:

(A) By order approve such proposed rule change; or

(B) Institute proceedings to determine whether the proposed rule change should be disapproved.

IV. Solicitation of Comments

Interested persons are invited to submit written data, views, and arguments concerning the foregoing, including whether the proposed rule change is consistent with the Act. Persons making written submissions should file six copies thereof with the Secretary, Securities and Exchange Commission, 450 Fifth Street, NW, Washington, DC 20549–0609. Copies of the submission, all subsequent amendments, all written statements with respect to the proposed rule change that are filed with the Commission, and all written communications relating to the proposed rule change between the Commission and any person, other than those that may be withheld from the public in accordance with the provisions of 5 U.S.C. 552, will be available for inspection and copying in the Commission's Public Reference Room. Copies of the filing will also be available for inspection and copying at the principal offices of the Exchange. All submissions should refer to File No. SR–CBOE–2002–02 and should be submitted by April 10, 2002.

For the Commission, by the Division of Market Regulation, pursuant to delegated authority.[8]

Margaret H. McFarland,

Deputy Secretary.

[FR Doc. 02–6642 Filed 3–19–02; 8:45 am]

BILLING CODE 8010–01–P

[3] *See* Securities Exchange Act Release No. 44846 (September 25, 2001), 66 FR 49983 (October 1, 2001).

[4] *See* letter from Dennis L. Covelli, Vice President, New York Stock Exchange, Inc. to Annette Nazareth, Director, Division of Market Regulation, Commission, dated July 25, 2000.

[5] 15 U.S.C. 78s(b)(3)(A).

[6] 15 U.S.C. 78f(b).

[7] 15 U.S.C. 78f(b)(5).

[8] 17 CFR 200.30–3(a)(12).

SECURITIES AND EXCHANGE COMMISSION

[Release No. 34–45562; File No. SR–MSRB–2001–08]

Self-Regulatory Organizations; Municipal Securities Rulemaking Board; Order Granting Approval of Proposed Rule Change Relating to Official Communications, Pursuant to MSRB Rules G–15 and G–8

March 14, 2002.

On November 6, 2001, the Municipal Securities Rulemaking Board (''MSRB'')

filed with the Securities and Exchange Commission (''Commission'') a proposed rule change (File No. SR–MSRB–2001–08) (the ''proposed rule change'') relating to official communications under Rules G–15 and G–8. The MSRB submited the proposed rule change pursuant to Section 19(b)(1) of the Securities Exchange Act of 1934 (''Exchange Act'') and Rule 19b–4 thereunder.[1]

The Commission published the proposed rule change for comment in the **Federal Register** on February 8, 2001.[2] The Commission received no comment letters regarding the forgoing proposal. This order approves the proposal.

I. Description of the Proposed Rule Change

The MSRB's proposed rule change amended Rule G–15 on confirmation, clearance and settlement of transactions with customers and Rule G–8 on books and records. The proposed rule change requires brokers, dealers and municipal securities dealers (collectively ''dealers'') that safekeep municipal securities to retransmit official documents about municipal securities issues to their safekeeping clients under certain conditions. The amendment to Rule G–15 provides that, upon request for retransmission, dealers who serve as safekeeping agents must undertake ''reasonable efforts'' to retransmit ''official communications'[3] to their safekeeping clients. For their retransmission efforts, the amendment provides that dealers receive ''adequate compensation'.[4] Without an offer of adequate compensation, dealers are not required to effect the retransmission.

The proposed amendment includes a ''compensation threshold''. For retransmission where the total compensation sought will be less than $500, the dealer should begin retransmitting immediately and ask for the calculated compensation concurrently. For retransmission where the total compensation sought will be greater than $500, the dealer may chose instead to promptly contact the party offering compensation, inform it of the amount of compensation required, obtain specific agreement on the amount of compensation and wait for receipt of such compensation prior to proceeding with the retransmission.

In addition, the amendment allows dealers in certain circumstances to send to the party requesting an official communication retransmission a list of beneficial owners who do not object to the disclosure of their name, contact information and security positions (''non-objecting beneficial owners'') in lieu of retransmitting documents. The customer account information amendment to Rule G–8 ensures that dealers retain an official record of a customer's written authorization, if any, as to the customer's status as a non-objecting beneficial owner.

The MSRB realizes that some dealers today retransmit documents to their customers voluntarily, or under specific terms of their safekeeping agreements, and in many cases do so without compensation from the party requesting retransmission. It is not the intent of the proposed rule change to discourage retransmissions of official communications in these cases. Rather, the purpose of the proposed rule change is to ensure that parties needing to transmit official communications to beneficial owners may rely on dealers undertaking reasonable efforts, under the explicit terms of Rules G–15 and G–8, to retransmit such official communications and maintain appropriate records.

II. Discussion

The MSRB believes that the proposed rule filing, relating to official communications, will promote just and equitable principles of trade and fosters an open market for municipal securities. Additionally, the MSRB believes that the proposed rule change will not impose any burden on competition not necessary or appropriate in furtherance of the purposes of the Exchange Act since it applies equally to all dealers in municipal securities.

The Commission must approve a proposed MSRB rule change if the Commission finds that the MSRB's proposal is consistent with the requirements of the Exchange Act and the rules and regulations thereunder that govern the MSRB.[5] The language of Section 15(b)(2)(C) of the Exchange Act requires that the MSRB's rules must be designed to prevent fraudulent and manipulative acts and practices, to promote just and equitable principals of trade, to foster cooperation and coordination with persons engaged in regulating, settling, processing information with respect to, and facilitating transactions in securities, to remove impediments to and perfect the mechanism of a free and open market and a national system, and, in general, to protect investors and the public interest.[6]

After careful review, the Commission finds that the MSRB's proposed rule change relating to official communications meets this standard. The Commission believes that this proposed rule change is consistent with the requirements of the Exchange Act, and the rules and regulations thereunder. In particular, the Commission finds that the proposed rule is consistent with the requirements of Section 15B(b)(2)(C) of the Exchange Act, set forth above.

III. Conclusion

It is therefore ordered, pursuant to Section 19(b)(2) of the Exchange Act that the proposed rule change (File No. SR–MSRB–2001–08) be, and hereby is, approved.

For the Commission, by the Division of Market Regulation, pursuant to delegated authority.[7]

Margaret H. McFarland,

Deputy Secretary.

[FR Doc. 02–6715 Filed 3–19–02; 8:45 am]

BILLING CODE 8010–01–P

[1] 15 U.S.C. 78s(b)(1) and 17 CFR 240.19b–4 thereunder.

[2] *See* Release No. 34–45363 (January 30, 2002), 67 FR 6067.

[3] The proposed rule change defines an ''official communication'' as a document or collection of documents addressed to beneficial owners that was prepared or authorized by an issuer of municipal securities, a trustee for an issue of municipal securities, a state or federal tax authority or a custody agent for a stripped coupon municipal securities program in its capacity as custody agent. *See* Release No. 34–45363 (January 30, 2002), 67 FR 6067.

[4] Rule G–15 does not provide specific guidance to define adequate compensation; however, the proposed rule change references the rates of compensation for transmittal of documents detailed in NASD interpretation IM–2260, on Suggested Rates of Reimbursement, relating to forwarding of proxy and other materials. *See id.*; *see also NASD Manual* (CCH) ¶ 4233. As under NASD Rule 2260, compensation under Rule G–15 is intended to reimburse a dealer for its out of pocket expenses, including reasonable clerical expenses, associated with the particular retransmission. *See NASD Manual* (CCH) ¶ 4231.

[5] Additionally, in approving this rule, the Commission notes that it has considered the proposed rule's impact on efficiency, competition, and capital formation. 15 U.S.C. 78c(f).

[6] 15 U.S.C. 78o–4(b)(2)(c).

[7] 17 CFR 200.30–3(a)(12).

SECURITIES AND EXCHANGE COMMISSION

[Release No. 34–45547; File No. SR–NYSE–2002–12]

Self-Regulatory Organizations; Notice of Filing of Proposed Rule Change by the New York Stock Exchange, Inc. to Eliminate References to Quoting in Fractions

March 12, 2002.

Pursuant to section 19(b)(1) of the Securities Exchange Act of 1934 (''Act''),[1] and Rule 19b–4 thereunder,[2] notice is hereby given that on March 5,

[1] 15 U.S.C. 78s(b)(1).

[2] 17 CFR 240.19b–4.

2002, the New York Stock Exchange, Inc. (''NYSE'' or ''Exchange'') filed with the Securities and Exchange Commission (''Commission'') the proposed rule change as described in Items I, II, and III below, which Items have been prepared by the NYSE. The Commission is publishing this notice to solicit comments on the proposed rule change from interested persons.

I. Self-Regulatory Organization's Statement of the Terms of Substance of the Proposed Rule Change

The NYSE proposes to amend its rules to eliminate references to fractional pricing increments and to make such rules compatible with quoting in decimals. The text of the proposed rule change is available at the NYSE and at the Commission.

II. Self-Regulatory Organization's Statement of the Purpose of, and Statutory Basis for, the Proposed Rule Change

In its filing with the Commission, the Exchange included statements concerning the purpose of, and basis for, the proposed rule change and discussed any comments it received on the proposed rule change. The text of these statements may be examined at the places specified in Item IV below. The Exchange has prepared summaries, set forth in Sections A, B, and C below, of the most significant aspects of such statements.

A. Self-Regulatory Organization's Statement of the Purpose of, and Statutory Basis for, the Proposed Rule Change

1. Purpose

The Exchange proposes to amend its rules to change references to fractional pricing increments to decimal pricing of equities as described herein. This submission is in accordance with the Commission's order [3] requiring self-regulatory organizations to submit rule filings regarding decimal pricing pursuant to section 19(b)(2) of the Act.[4] The Commission previously reviewed the Exchange's filing proposing amendments to Exchange rules to accommodate phasing in the quoting of decimals commencing August 28, 2000.[5] The Exchange completed the conversion to quoting all listed stocks in decimals on January 29, 2001.

In SR–NYSE–2000–22,[6] the Exchange proposed a Minimum Price Variation (''MPV'') of one cent (0.01) for equities. The Exchange proposes to continue the MPV for equities of one cent (0.01). The rule changes proposed herein, therefore, primarily delete references to quoting in fractions that were retained in Exchange rules to accommodate securities that continued quoting in fractions during the phase in of full decimalization.

Summary of Rule Amendments: Other rules proposed to be amended are summarized below.

Rule 15 (ITS and Pre-Opening Application). The changes to Rule 15 remove references to fractions in the sections dealing with Intermarket Trading System procedures for openings.

Rule 64 (Bonds, Rights and 100 Share-Unit Stocks). Floor Official approval must be obtained for a non-regular way trade that is 2/16 or .10 away from the regular way bid or offer. For trades during the last calendar week of the year, the approval level is ¼ or .25. The fractional references will be removed.

Rule 72(b) (Clean Agency Cross). Decimals will replace fractions used in the two examples.

Rule 79A.30 (Miscellaneous Requirements on Stock and Bond Market Procedures). Examples in fractions will be deleted.

Rule 105 (Guidelines For Specialists' Specialty Stock Option Transactions Pursuant to Rule 105). References to fractions in the example will be deleted.

Rule 123A.30 (Percentage Orders). Percentage orders may be converted on a destabilizing tick if the order meets certain requirements of size (10,000 shares or more or $500,000 in market value) and the execution price of the converted percentage order is no more than ¼ or .25 point away from the last sale. Percentage orders may also be converted on a destabilizing tick to narrow a quotation spread as long as the bid is no more than ⅛ or .10 higher than the last sale. The ⅛ and ¼ parameters will be removed.

Rule 123A.40 (Stop Orders). Floor Official approval must be obtained when a specialist's transaction for his or her own account elects stop orders and the transaction is more than 2/16 or .10 away from the previous transaction. The 2/16 parameter will be removed.

Rule 192 (Part-Paid Securities). Examples in fractions will be deleted.

Rule 440B.15 (Short Sale Rule Interpretations). The examples in the last paragraph that delineate the prices at which short sales may be made are amended to show a one cent MPV for stocks.

2. Statutory Basis

The Exchange believes that the proposed rule change is consistent with the objectives of section 6(b)(5) of the Act,[7] which requires an exchange to have rules that are designed to prevent fraudulent and manipulative acts and practices, to promote just and equitable principles of trade, to remove impediments to and perfect the mechanism of a free and open market and a national market system and, in general, to protect investors and the public interest.

B. Self-Regulatory Organization's Statement on Burden on Competition

The Exchange does not believe that the proposed rule change will impose any burden on competition that is not necessary or appropriate in furtherance of the purposes of the Act.

C. Self-Regulatory Organization's Statement on Comments on the Proposed Rule Change Received From Members, Participants, or Others

No written comments were solicited or received with respect to the proposed rule change.

III. Date of Effectiveness of the Proposed Rule Change and Timing for Commission Action

Within 35 days of the date of publication of this notice in the **Federal Register** or within such longer period (i) as the Commission may designate up to 90 days of such date if it finds such longer period to be appropriate and publishes its reasons for so finding, or (ii) as to which the Exchange consents, the Commission will:

(A) By order approve such proposed rule change; or

(B) Institute proceedings to determine whether the proposed rule change should be disapproved.

IV. Solicitation of Comments

Interested persons are invited to submit written data, views, and arguments concerning the foregoing, including whether the proposed rule change is consistent with the Act. Persons making written submissions should file six copies thereof with the Secretary, Securities and Exchange Commission, 450 Fifth Street, NW, Washington, DC 20549–0609. Copies of the submission, all subsequent amendments, all written statements with respect to the proposed rule change that are filed with the

[3] *See* Securities Exchange Act Release No. 44846 (September 25, 2001), 66 FR 49983 (October 1, 2001).

[4] 15 U.S.C. 78s(b)(2).

[5] *See* Securities Exchange Act Release No. 43230 (August 30, 2000), 65 FR 54589 (September 8, 2000) (SR–NYSE–2000–22).

[6] *Id.*

[7] 15 U.S.C. 78f(b)(5).

Commission, and all written communications relating to the proposed rule change between the Commission and any person, other than those that may be withheld from the public in accordance with the provisions of 5 U.S.C. 552, will be available for inspection and copying in the Commission's Public Reference Room. Copies of the filing will also be available for inspection and copying at the principal offices of the Exchange. All submissions should refer to File No. SR–NYSE–2002–12 and should be submitted by April 10, 2002.

For the Commission, by the Division of Market Regulation, pursuant to delegated authority.[8]

Margaret H. McFarland,

Deputy Secretary.

[FR Doc. 02–6641 Filed 3–19–02; 8:45 am]

BILLING CODE 8010–01–P

SOCIAL SECURITY ADMINISTRATION

The Ticket To Work and Work Incentives Advisory Panel Teleconferences

AGENCY: Social Security Administration (SSA).

ACTION: Notice of Teleconferences.

DATES: Wednesday April 3, 2002 and Tuesday April 9, 2002.

TELECONFERENCES: Wednesday April 3, 2002, 1:30 PM to 3:30 PM and Tuesday April 9, 2002, 1:30 PM to 3:30 PM.

Ticket To Work and Work Incentives Advisory Panel Conference Calls

Call-in number: 888–603–9224.
Pass code: 11212.
Leader/Host: Sarah Wiggins Mitchell.

SUPPLEMENTARY INFORMATION:

Type of meeting: These teleconference meetings are open to the public. The interested public is invited to participate by calling into the teleconference at the number listed above. Public testimony will not be taken.

Purpose: In accordance with section 10(a)(2) of the Federal Advisory Committee Act, the Social Security Administration (SSA) announces this teleconference meeting of the Ticket to Work and Work Incentives Advisory Panel (the Panel). Section 101(f) of Public Law 106–170 establishes the Panel to advise the Commissioner of SSA, the President, and the Congress on issues related to work incentives programs, planning and assistance for individuals with disabilities as provided under section 101(f)(2)(A) of the TWWIIA. The Panel is also to advise the Commissioner on matters specified in section 101(f)(2)(B) of that Act, including certain issues related to the Ticket to Work and Self-Sufficiency Program established under section 101(a) of that Act.

Agenda: The Panel will deliberate on the implementation of TWWIIA and conduct administrative business. Topics of discussion on April 3, 2002 will include a briefing and discussion on issues related to forthcoming regulatory packages on certain provisions of TWWIIA, including Protection & Advocacy, Expedited Reinstatement, Continuing Disability Review Protection and referrals to Vocational Rehabilitation. Topics of discussion on April 9, 2002 and will include deliberations on the Panel's Annual Report and Progress Report on the Ticket to Work Program. The agenda for these meetings will posted on the Internet at *http://www.ssa.gov/work/panel/* one week prior to each teleconference or can be received in advance electronically or by fax upon request.

Contact Information: Records are being kept of all Panel proceedings and will be available for public inspection by appointment at the Panel office. Anyone requiring information regarding the Panel should contact the TWWIIA Panel staff by:

- mail addressed to Ticket to Work and Work Incentives Advisory Panel Staff, Social Security Administration, 400 Virginia Avenue, SW, Suite 700, Washington, DC, 20024;
- telephone contact with Kristen Breland at (202) 358–6430;
- fax at (202) 358–6440;
- or e-mail to *TWWIIAPanel@ssa.gov*

Dated: March 14, 2002.

Deborah M. Morrison,

Designated Federal Officer.

[FR Doc. 02–6816 Filed 3–19–02; 8:45 am]

BILLING CODE 4191–02–U

DEPARTMENT OF STATE

[Public Notice 3949]

Determination: Assistance for the Implementation Monitoring Committee To Implement the Burundi Peace Process

Pursuant to section 451 of the Foreign Assistance Act of 1961, as amended, (the ''Act'') (22 U.S.C. 2261) and section 1–100 of Executive Order 12163, as amended, I hereby authorize, notwithstanding any other provision of law, the use of up to $1,000,000 in FY 2001 funds made available under Chapter 4 of Part II of the Act, in order to provide assistance authorized by Part I of the Act to support the Implementation Monitoring Committee provided for in the August 2000 Arusha Peace and Reconciliation Agreement for Burundi to help implement the Burundi peace agreement.

This Determination shall be reported to Congress promptly and published in the **Federal Register**.

Dated: March 11, 2002.

Colin L. Powell,

Secretary of State, Department of State.

[FR Doc. 02–6720 Filed 3–19–02; 8:45 am]

BILLING CODE 4710–10–P

DEPARTMENT OF TRANSPORTATION

Federal Aviation Administration

[Summary Notice No. PE–2002–16]

Petitions for Exemption

AGENCY: Federal Aviation Administration (FAA), DOT.

ACTION: Notice of dispositions of prior petitions.

SUMMARY: Pursuant to FAA's rulemaking provisions governing the application, processing, and disposition of petitions for exemption part 11 of Title 14, Code of Federal Regulations (14 CFR), this notice contains a summary of dispositions of petitions previously received. The purpose of this notice is to improve the public's awareness of, and participation in, this aspect of FAA's regulatory activities. Neither publication of this notice nor the inclusion or omission of information in the summary is intended to affect the legal status of any petition or its final disposition.

FOR FURTHER INFORMATION CONTACT: Denise Emrick (202) 267–5174, Office of Rulemaking (ARM–1), Federal Aviation Administration, 800 Independence Avenue, SW., Washington, DC 20591.

This notice is published pursuant to 14 CFR 11.85 and 11.91.

Issued in Washington, DC, on March 14, 2002.

Donald P. Byrne,

Assistant Chief Counsel for Regulation.

Disposition of Petitions

Docket No.: FAA–2002–11494.
Petitioner: Segrave Aviation, Inc.
Section of 14 CFR Affected: 14 CFR § 135.143(c)(2).
Description of Relief Sought/Disposition: To permit Segrave to operate certain aircraft under part 135

[8] 17 CFR 200.30–3(a)(12).

without a TSO–C112 (Mode S) transponder installed in the aircraft. *Grant, 02/14/2002, Exemption No. 7723.*

Docket No.: FAA–2002–11493
Petitioner: Central Copters, Inc.
Section of 14 CFR Affected: 14 CFR § 135.143(c)(2).
Description of Relief Sought/ Disposition: To permit Central Copters to operate certain aircraft under part 135 without a TSO–C112 (Mode S) transponder installed on the aircraft. *Grant, 02/14/2002, Exemption No. 7724.*

Docket No.: FAA–2002–11497
Petitioner: Eagle Aviation Academy.
Section of 14 CFR Affected: 14 CFR § 135.143(c)(2).
Description of Relief Sought/ Disposition: To permit Eagle Aviation Academy to operate certain aircraft under part 135 without a TSO–C112 (Mode S) transponder installed on the aircraft. *Grant, 02/14/2002, Exemption No. 7725.*

Docket No.: FAA–2002–11553.
Petitioner: Air One Express, Inc.
Section of 14 CFR Affected: 14 CFR § 135.143(c)(2).
Description of Relief Sought/ Disposition: To permit Air One to operate certain aircraft under part 135 without a TSO–C112 (Mode S) transponder installed on the aircraft. *Grant, 02/14/2002, Exemption No. 7726.*

Docket No.: FAA–2002–11560.
Petitioner: Global Air Charter, Inc.
Section of 14 CFR Affected: 14 CFR § 135.143(c)(2).
Description of Relief Sought/ Disposition: To permit Global Air Charter to operate certain aircraft under part 135 without a TSO–C–112 (Mode S) transponder installed on the aircraft. *Grant, 02/14/2002, Exemption No. 7722.*

Docket No.: FAA–2002–11499.
Petitioner: Mr. Randy L. Bailey.
Section of 14 CFR Affected: 14 CFR § 91.109 (a) and (b)(3).
Description of Relief Sought/ Disposition: To permit Mr. Bailey to conduct certain flight instruction and simulated instrument flights to meet the recent experience requirements in Beechcraft Bonanza, Baron, and Travel Air airplanes equipped with a functioning throwover control wheel in place of functioning dual controls. *Grant, 02/25/2002, Exemption No. 7734.*

Docket No.: FAA–2002–11591.
Petitioner: Aircraft Owners and Pilots Association.
Section of 14 CFR Affected: 14 CFR §§ 135.251, 135.255, and 135.353, and appendixes I and J to part 121.
Description of Relief Sought/ Disposition: To permit Aircraft Owners and Pilots Association member pilots to conduct local sightseeing flights at charity or community events, for compensation or hire, without complying with certain anti-drug and alcohol misuse prevention program requirements of part 135. *Grant, 02/28/ 2002, Exemption No. 7112B (Previously Docket No. 29648).*

Docket No.: FAA–2001–11090.
Petitioner: Army Aviation Heritage Foundation.
Section of 14 CFR Affected: 14 CFR §§ 91.319, 119.5(g), and 119.25(b).
Description of Relief Sought/ Disposition: To permit the Army Aviation Heritage Foundation to operate its former military UH–1H helicopter that holds an experimental airworthiness certificate for the purpose of carrying passengers on local educational flights. *Grant, 03/04/2002, Exemption No. 7736.*

Docket No.: FAA–2002–11355.
Petitioner: Embry Riddle Aeronautical University.
Section of 14 CFR Affected: 14 CFR § 61.71(a).
Description of Relief Sought/ Disposition: To permit the commercial pilot certification practical tests that two Embry Riddle students successfully completed to be valid although the completion dates of the exams exceeded the required 60-day period from their graduation date due to the flight restrictions put in place after the events that took place on September 11, 2001. *Grant, 02/27/2002, Exemption No. 7733.*

Docket No.: FAA–2002–11608.
Petitioner: Palmyra Flying Club, Inc.
Section of 14 CFR Affected: 14 CFR §§ 135.251, 135.251, 135.255, and 135.353, and appendixes I and J to part 121.
Description of Relief Sought/ Disposition: To permit Palmyra to conduct local sightseeing flights at Palmyra Airport for the fly-in breakfast on June 16, 2002, for compensation or hire, without complying with certain anti-drug and alcohol misuse prevention requirements of part 135. *Grant, 02/28/ 2002, Exemption No. 7730.*

Docket No.: FAA–2002–11504.
Petitioner: DeKalb Peachtree Airport.
Section of 14 CFR Affected: 14 CFR §§ 135.251, 135.255, and 135.353, and appendixes I and J to part 121.
Description of Relief Sought/ Disposition: To permit DeKalb Peachtree Airport to conduct local sightseeing flights for its Good Neighbor Day Open House/Airshow on June 1, 2002, and June 7, 2003, for compensation or hire, without complying with certain anti-drug and alcohol misuse presentation requirements of part 135. *Grant, 02/28/ 2002, Exemption No. 7731.*

[FR Doc. 02–6649 Filed 3–19–02; 8:45 am]
BILLING CODE 4910–13–M

DEPARTMENT OF TRANSPORTATION

Federal Aviation Administration

[Summary Notice No. PE–2002–17]

Petitions for Exemption; Dispositions of Petitions Issued

AGENCY: Federal Aviation Administration (FAA), DOT.

ACTION: Notice of dispositions of prior petitions.

SUMMARY: Pursuant to FAA's rulemaking provisions governing the application, processing, and disposition of petitions for exemption part 11 of Title 14, Code of Federal Regulations (14 CFR), this notice contains the dispositions of certain petitions previously received. The purpose of this notice is to improve the public's awareness of, and participation in, this aspect of FAA's regulatory activities. Neither publication of this notice nor the inclusion or omission of information in the summary is intended to affect the legal status of any petition or its final disposition.

FOR FURTHER INFORMATION CONTACT: Denise Emrick (202) 267–5174, Office of Rulemaking (ARM–1), Federal Aviation Administration, 800 Independence Avenue, SW., Washington, DC 20591.

This notice is published pursuant to 14 CFR 11.85 and 11.91.

Issued in Washington, DC on March 14, 2002.

Donald P. Byrne,
Assistant Chief Counsel for Regulations.

Dispositions of Petitions

Docket No.: FAA–2002–11458.
Petitioner: Northern Air Fuel, Inc.
Section of 14 CFR Affected: 14 CFR 91.9(a).
Description of Relief Sought/ Disposition: To permit Northern Air Fuel to operate its DC–6A and DC–6B aircraft at a 5 percent increased zero fuel and landing weight for the purpose of operating all-cargo aircraft to provide supplies to people in isolated villages in Alaska.
Grant, 02/06/2002, Exemption No. 7709

Docket No.: FAA–2001–8828.
Petitioner: Ayres Corporation.
Section of 14 CFR Affected: 14 CFR 61.31(a)(1).
Description of Relief Sought/ Disposition: To permit Ayres pilots when operating an Ayres Model S2R–T660 aircraft (S2R–T660) to act as pilot

in command (PIC) without holding a type rating for that aircraft.

Grant, 01/25/2002, Exemption No. 7708.

Docket No.: FAA–2002–11559.

Petitioner: Brim Equipment Leasing, Inc. dba Brim Aviation.

Section of 14 CFR Affected: 14 CFR 135.143(c)(2).

Description of Relief Sought/ Disposition: To permit Brim Aviation to operate certain aircraft under part 135 without a TSO–C112 (Mode S) transponder installed on those aircraft.

Grant, 02/19/2002, Exemption No. 7176A (Previously Docket No. 29902)

Docket No.: FAA–2002–11557.

Petitioner: Bemidji Aviation Services, Inc.

Section of 14 CFR Affected: 14 CFR 135.143(c)(2).

Description of Relief Sought/ Disposition: To permit Bemidji to operate certain aircraft under part 135 without a TSO–C112 (Mode S) transponder installed on those aircraft.

Grant, 02/25/2002, Exemption No. 6110C (Previously Docket No. 28173)

Docket No.: FAA–2002–11554.

Petitioner: Adeletom Aviation. LLC.

Section of 14 CFR Affected: 14 CFR 135.143(c)(2).

Description of Relief Sought/ Disposition: To permit Adeletom to operate certain aircraft under part 135 without a TSO–C112 (Mode S) transponder installed on those aircraft.

Grant, 02/25/2002, Exemption No. 7201A (Previously Docket No. 29911).

Docket No.: FAA–2002–11508.

Petitioner: Premier Jets, Inc.

Section of 14 CFR Affected: 14 CFR 135.143(c)(2).

Description of Relief Sought/ Disposition: To permit Premier Jets to operate certain aircraft under part 135 without a TSO–C112 (Mode S) transponder installed on those aircraft.

Grant, 02/14/2002, Exemption No. 7160A (Previously Docket No. 29195).

Docket No.: FAA–2002–11655.

Petitioner: IHC Health Services, Inc. dba IHC Life Flight.

Section of 14 CFR Affected: 14 CFR 133.45(e)(1).

Description of Relief Sought/ Disposition: To permit IHC to conduct Class D rotorcraft-load combination rescue operations with an Agusta A 109K–2 helicopter certificated in the normal category under 14 CFR part 27.

Grant, 02/25/2002, Exemption No. 7118A (Previously Docket No. 29732).

Docket No.: FAA–2002–11485.

Petitioner: Southwest Airlines Company.

Section of 14 CFR Affected: 14 CFR 121.434(c)(1)(ii).

Description of Relief Sought/ Disposition: To permit Southwest to substitute a qualified and authorized check airman in place of an FAA inspector to observe a qualifying pilot in command (PIC) while that PIC is performing prescribed duties during at least one flight leg that includes a takeoff and landing when completing initial or upgrade training as specified in § 121.424.

Grant, 02/25/2002, Exemption No. 7132A (Previously Docket No. 29836).

Docket No.: FAA–2002–11352.

Petitioner: Continental Micronesia Airlines, Inc.

Section of 14 CFR Affected: 14 CFR 121.291(b)(1) and 121.291(d).

Description of Relief Sought/ Disposition: To permit Continental Micronesia Airlines to operate Boeing 737–800 airplanes without conducting a partial demonstration of emergency evacuation procedures upon the initial introduction of a type and model of airplane into passenger/carrying operations, and without showing by simulated ditching that it has the ability to efficiently carry out its ditching procedures.

Denial, 02/22/2002, Exemption No. 7718.

Docket No.: FAA–2002–11556.

Petitioner: Grant Aviation, Inc.

Section of 14 CFR Affected: 14 CFR 135.143(c)(2).

Description of Relief Sought/ Disposition: To permit Grant to operate certain aircraft under part 135 without a TSO–C112 (Mode S) transponder installed on those aircraft.

Grant, 02/19/2002, Exemption No. 7221A (Previously Docket No. 3008)

Docket No.: FAA–2002–11491.

Petitioner: Grant Aircraft Company.

Section of 14 CFR Affected: 14 CFR 91.9(a) and 91.531(a) (1) and (2).

Description of Relief Sought/ Disposition: To permit Cessna to allow certain qualified pilots of Cessna Citation Model 550, S550, 552, or 560 aircraft to operate those aircraft without a pilot who is designated as second in command.

Grant, 02/25/2002, Exemption No. 4050L (Previously Docket No. 23771)

Docket No.: FAA–2001–10555.

Petitioner: DHL Airways, Inc.

Section of 14 CFR Affected: 14 CFR 121.433(c)(1)(iii) and 121.441 (a)(1) and (b)(1), and, appendix F to part 121.

Description of Relief Sought/ Disposition: To permit DHL to combine recurrent flight and ground training and proficiency checks to DHL's flight crewmembers into a single annual training and proficiency evaluation program.

Grant, 02/20/2002, Exemption No. 6727B (Previously Docket No. 28808)

Docket No.: FAA–2002–11458.

Petitioner: Northern Air Fuel, Inc.

Section of 14 CFR Affected: 14 CFR 91.9(a).

Description of Relief Sought/ Disposition: To permit Northern Air Fuel to operate its DC–6A and DC–6B aircraft at a 5 percent increased zero fuel and landing weight for the purpose of operating all-cargo aircraft to provide supplies to people in isolated villages in Alaska.

Grant, 02/25/2002, Exemption No. 7709A

Docket No.: FAA–2002–11563.

Petitioner: Better Living Aviation.

Section of 14 CFR Affected: 14 CFR 135.143(c)(2).

Description of Relief Sought/ Disposition: To permit Better Living Aviation to operate certain aircraft under part 135 without a TSO–C112 (Mode S) transponder installed on those aircraft.

Grant, 02/19/2002, Exemption No. 7206A (Previously Docket No. 29956)

[FR Doc. 02–6650 Filed 3–19–02; 8:45 am]

BILLING CODE 4910–13–M

DEPARTMENT OF TRANSPORTATION

Federal Aviation Administration

Government/Industry Aeronautical Charting Forum Meeting

AGENCY: Federal Aviation Administration (FAA), DOT.

ACTION: Notice of public meeting.

SUMMARY: This notice announces a public meeting of the Federal Aviation Administration's Government/Industry Aeronautical Charting Forum to discuss informational content and design of aeronautical charts.

DATES: The meeting will be held from April 29, 2002 to May 2, 2002 from 9 a.m. to 4:30 p.m.

ADDRESSES: The meeting will be held at the National Aeronautical Charting Office, Silver Spring Metro Center, Building 4, 1305 East-West Highway, Silver Spring, Maryland 20910.

FOR FURTHER INFORMATION CONTACT: Richard V. Powell, FAA, Air Traffic Airspace Management, ATA–100, 800 Independence Avenue, SW., Washington, DC 20591; telephone: (202) 267–8790, fax: (202) 493–4266.

SUPPLEMENTARY INFORMATION: Pursuant to § 10(a)(2) of the Federal Advisory Committee Act (Pub. L. 92–463; 5 U.S.C. App. II), notice is hereby given of a meeting of the Government/Industry

Aeronautical Charting Forum to be held from April 29, 2002 to May 2, 2002, from 9 a.m. to 4:30 p.m. at the National Aeronautical Charting Office, Silver Spring Metro Center, Building 4, 1305 East-West Highway, Silver Spring, Maryland 20910. The agenda will include:

1. Opening Remarks.
2. Committee Administration.
3. Old Business—Review minutes of last forum 01–02.
4. Aeronautical Charting Forum working groups reports, project reports.
5. Status of outstanding charting topics.
6. New charting topics.
7. Presentations.
8. Closing remarks.
9. Discussion of future meeting dates, locations, activities and plans.
10. Adjourn

Attendance is open to the interested public, but will be limited to the space available.

The public must make arrangements by April 3, 2002, to present oral statements at the meeting. The public may present written statements to the committee at any time by providing a copy to the person listed in the **FOR FURTHER INFORMATION CONTACT** section. Public statements will only be considered if time permits.

Issued in Washington, DC, on March 14, 2002.

Richard V. Powell,

Chair, Government/Industry, Aeronautical Charting Forum.

[FR Doc. 02–6652 Filed 3–19–02; 8:45 am]

BILLING CODE 4910–13–M

DEPARTMENT OF TRANSPORTATION

Federal Aviation Administration

Notice of Intent To Rule on Application 02–09–U–00–CLE To Use the Revenue From a Passenger Facility Charge (PFC) at Cleveland Hopkins International Airport (CLE) and Burke Lakefront Airport (BKL), Cleveland, OH

AGENCY: Federal Aviation Administration (FAA), DOT.

ACTION: Notice of intent to rule on application.

SUMMARY: The FAA proposes to rule and invites public comment on the application to use the revenue from a PFC at Cleveland Hopkins International Airport and Burke Lakefront Airport under the provisions of the 49 U.S.C. 40117 and part 158 of the Federal Aviation Regulations (14 CFR part 158).

DATES: Comments must be received on or before April 19, 2002.

ADDRESSES: Comments on this application may be mailed or delivered in triplicate to the FAA at the following address: Federal Aviation Administration, Detroit Airports District Office, Willow Run Airport, East, 8820 Beck Road, Belleville, Michigan 48111.

In addition, one copy of any comments submitted to the FAA must be mailed or delivered to Michael Konicek, Cleveland Hopkins International Airport at the following address: Cleveland Hopkins International Airport, 5300 Riverside Drive, Cleveland, Ohio 44135.

Air carriers and foreign air carriers may submit copies of written comments previously provided to the Cleveland Hopkins International Airport under section 158.23 of part 158.

FOR FURTHER INFORMATION CONTACT: Ms. Arlene B. Draper, Program Manager, Federal Aviation Administration, Detroit Airports District Office, Willow Run Airport, East, 8820 Beck Road, Belleville, Michigan 48111 (734–487–7283). The application may be reviewed in person at this same location.

SUPPLEMENTARY INFORMATION: The FAA proposes to rule and invites public comment on the application to use the revenue from a PFC at Cleveland Hopkins International Airport and Burke Lakefront Airport under the provisions of the 49 U.S.C. 40117 and part 158 of the Federal Aviation Regulations (14 CFR part 158).

On February 5, 2002, the FAA determined that the application to use the revenue from a PFC submitted by Cleveland Hopkins International Airport was substantially complete within the requirements of section 158.25 of part 158. The FAA will approve or disapprove the application, in whole or in part, not later than May 31, 2002.

The following is a brief overview of the application.

Actual charge effective date: June 1, 1999.

Estimated charge expiration date: November 1, 2002.

Level of the proposed PFC: $4.50.

Total estimated PFC revenue: $3,410,400.

Brief description of proposed projects: Analex Office Building Demolition (CLE); Installation of Instrument Landing System (ILS) on Runway 6L/24R (BKL).

Class or classes of air carriers which the public agency has requested to be required to collect PFCs: air taxi.

Any person may inspect the application in person at the FAA office listed above under **FOR FURTHER INFORMATION CONTACT.**

In addition, any person may, upon request, inspect the application, notice and other documents germane to the application in person at the Cleveland Hopkins International Airport, 5300 Riverside Drive, Cleveland, Ohio 44135.

Issued in Des Plaines, Illinois on March 12, 2002.

Mark A. McClardy,

Manager, Planning and Programming Branch, Airports Division, Great Lakes Region.

[FR Doc. 02–6651 Filed 3–19–02; 8:45 am]

BILLING CODE 4910–13–M

DEPARTMENT OF TRANSPORTATION

Federal Aviation Administration

Notice of Intent To Rule on Application To Impose and Use the Revenue From a Passenger Facility Charge (PFC) at Lubbock International Airport, Lubbock, TX

AGENCY: Federal Aviation Administration (FAA), DOT.

ACTION: Notice of Intent to Rule on Application.

SUMMARY: The FAA proposes to rule and invites public comment on the application to impose and use the revenue from a PFC at Lubbock International Airport under the provisions of the Aviation Safety and Capacity Expansion Act of 1990 (Title IX of the Omnibus Budget Reconciliation Act of 1990) (Public Law 101–508) and Part 158 of the Federal Aviation Regulations (14 CFR Part 158).

DATES: Comments must be received on or before April 19, 2002.

ADDRESSES: Comments on this application may be mailed or delivered in triplicate copies to the FAA at the following address: Mr. G. Thomas Wade, Federal Aviation Administration, Southwest Region, Airports Division, Planning and Programming Branch, ASW–611, Fort Worth, Texas 76193–0610.

In addition, one copy of any comments submitted to the FAA must be mailed or delivered to Mr. Mark N. Earle Manager of Lubbock International Airport at the following address: Director of Aviation, Route 3, Box 389, Lubbock, Texas 79403.

Air carriers and foreign air carriers may submit copies of the written comments previously provided to the Airport under Section 158.23 of Part 158.

FOR FURTHER INFORMATION CONTACT: Mr. G. Thomas Wade, Federal Aviation Administration, Southwest Region, Airports Division, Planning and Programming Branch, ASW–611, Fort Worth, Texas 76193–0610, (817) 222–5613.

The application may be reviewed in person at this same location.

SUPPLEMENTARY INFORMATION: The FAA proposes to rule and invites public comment on the application to impose and use the revenue from a PFC at Lubbock International Airport under the provisions of the Aviation Safety and Capacity Expansion Act of 1990 (Title IX of the Omnibus Budget Reconciliation Act of 1990) (Public Law 101–508) and Part 158 of the Federal Aviation Regulations (14 CFR Part 158).

On March 11, 2002, the FAA determined that the application to impose and use the revenue from a PFC submitted by the Airport was substantially complete within the requirements of Section 158.25 of Part 158. The FAA will approve or disapprove the application, in whole or in part, no later than June 19, 2002.

The following in a brief overview of the application.

Level of the proposed PFC: $3.00.

Proposed charge effective date: September 1, 2002.

Proposed charge expiration date: November 1, 2004.

Total estimated PFC revenue: $3,220,308.

PFC application number: 02–04–C–00–LBB.

Brief Description of Proposed Project(s)

Projects To Impose and Use PFC's

1. Construct ARFF Training Facility
2. Upgrade Airside Guidance Signs
3. Acquire 150-Gallon ARFF Vehicle
4. Update Airport Master Plan
5. Improve General Aviation Apron
6. Install Blast Wall

Project To Impose PFC's

1. Acquire Development Land

Projects To Use PFC's

1. Improve Westport Apron
2. Construct Taxiway B–1
3. Acquire ADA Aircraft Access Equipment

Proposed Class or Classes of Air Carriers To Be Exempted From Collecting PFC's

1. FAR Part 135 on demand air Taxi/Commercial Operator (ATCO) reporting on FAA Form 1800–31.
2. Air Carriers Filing RSPA form 298C, Schedule E1 or Schedule T1.

Any person may inspect the application in person at the FAA office listed above under **FOR FURTHER INFORMATION CONTACT** and at the FAA regional Airports office located at: Federal Aviation Administration, Southwest Region, Airports Division, Planning and Programing Branch, ASW–610, 2601 Meacham Blvd., Fort Worth, Texas 76137–4298.

In addition, any person may, upon request, inspect the application, notice and other documents germane to the application in person at Lubbock International Airport.

Issued in Fort Worth, Texas on March 11, 2002.

William J. Flanagan,

Acting Manager, Airports Division.

[FR Doc. 02–6648 Filed 3–19–02; 8:45 am]

BILLING CODE 4910–13–M

DEPARTMENT OF TRANSPORTATION

Federal Aviation Administration

Notice of Intent To Rule on Application To Impose and Use the Revenue From a Passenger Facility Charge (PFC) at Louis Armstrong New Orleans International Airport, New Orleans, LA

AGENCY: Federal Aviation Administration (FAA), DOT.

ACTION: Notice of intent to rule on application.

SUMMARY: The FAA proposes to rule and invites public comment on the application to impose and use the revenue from a PFC at Louis Armstrong New Orleans International Airport under the provisions of the Aviation Safety and Capacity Expansion Act of 1990 (Title IX of the Omnibus Budget Reconciliation Act of 1990) (Public Law 101–508) and Part 158 of the Federal Aviation Regulations (14 CFR Part 158).

DATES: Comments must be received on or before April 19, 2002.

ADDRESSES: Comments on this application may be mailed or delivered in triplicate copies to the FAA at the following address: Mr. G. Thomas Wade, Federal Aviation Administration, Southwest Region, Airports Division, Planning and Programming Branch, ASW–611, Fort Worth, Texas 76193–0610.

In addition, one copy of any comments submitted to the FAA must be mailed or delivered to Mr. Roy A. Williams Manager of Louis Armstrong New Orleans International Airport at the following address: Director of Aviation, P.O. Box 20007, New Orleans, LA 70141.

Air carriers and foreign air carriers may submit copies of the written comments previously provided to the Airport under Section 158.23 of Part 158.

FOR FURTHER INFORMATION CONTACT: Mr. G. Thomas Wade, Federal Aviation Administration, Southwest Region, Airports Division, Planning and Programming Branch, ASW–611, Fort Worth, Texas 76193–0610, (817) 222–5613.

The application may be reviewed in person at this same location.

SUPPLEMENTARY INFORMATION: The FAA proposes to rule and invites public comment on the application to impose and use the revenue from a PFC at Louis Armstrong New Orleans International Airport under the provisions of the Aviation Safety and Capacity Expansion Act of 1990 (Title IX of the Omnibus Budget Reconciliation Act of 1990) (Public Law 101–508) and Part 158 of the Federal Aviation Regulations (14 CFR part 158).

On March 13, 2002, the FAA determined that the application to impose and use the revenue from a PFC submitted by the Airport was substantially complete within the requirements of Section 158.25 of part 158. The FAA will approve or disapprove the application, in whole or in part, no later than June 17, 2002.

The following is a brief overview of the application.

Level of the proposed PFC: $4.50.

Proposed charge effective date: April 1, 2005.

Proposed charge expiration date: January 1, 2011.

Total estimated PFC revenue: $148,375,724.

PFC application number: 02–06–C–00–MSY.

Brief Description of Proposed Project(s)

Project to Impose and Use PFC's

1. *Acquire Aircraft Loading Bridges*
2. Upgrade Airfield Electrical System
3. Airfield Safety Improvements
4. Improve Apron Drainage
5. Conduct Benefit Cost Analysis
6. Reconstruct Concourse C
7. Conduct EIS for New Air Carrier Runway
8. Expand Terminal D
9. Upgrade Access Control and Security System
10. Replace ARFF Facility
11. Rehabilitate Runway 1/19 and Taxiway S
12. Rehabilitate Runway 10/18
13. Relocate Rotating Beacon
14. Acquire Land For Development—Lafon
15. Rehabilitate Terminal Apron
16. Rehabilitate Terminal HVAC
17. Acquire Land For Development—West Cargo Area

Proposed class or classes of air carriers to be exempted from collecting PFC's:

1. FAR Part 135 on demand air Taxi/Commercial Operator (ATCO) reporting on FAA Form 1800–31.

Any person may inspect the application in person at the FAA office listed above under **FOR FURTHER INFORMATION CONTACT** and at the FAA regional Airports office located at: Federal Aviation Administration, Southwest Region, Airports Division, Planning and Programming Branch, ASW–610, 2601 Meacham Blvd., Fort Worth, Texas 76137–4298.

In addition, any person may, upon request, inspect the application, notice and other documents germane to the application in person at Louis Armstrong New Orleans International Airport.

Issued in Fort Worth, Texas on March 13, 2002.

Naomi L. Saunders,

Manager, Airports Division.

[FR Doc. 02–6759 Filed 3–19–02; 8:45 am]

BILLING CODE 4910–13–M

DEPARTMENT OF TRANSPORTATION

Federal Highway Administration

Environmental Impact Statement: Waukesha County, WI

AGENCY: Federal Highway Administration (FHWA), DOT.

ACTION: Supplemental notice of intent.

SUMMARY: The FHWA is issuing this notice to advise the public that an environmental impact statement will be prepared for transportation improvements in the State Trunk Highway (STH) 83 corridor between County Trunk Highway (CTH) ''NN'' at the north limits of the Village of Mukwonago and STH 16, Waukesha County, Wisconsin. The north terminus was extended since the notice of intent was published in the **Federal Register** on March 26, 2001 (66 FR 16520).

FOR FURTHER INFORMATION CONTACT: Mr. Richard C. Madrzak, Field Operations Engineer, Federal Highway Administration, 567 D'Onofrio Drive, Madison, Wisconsin 53719–2814; telephone: (608) 829–7510. You may also contact Ms. Carol Cutshall, Director, Bureau of Environment, Wisconsin Department of Transportation, P.O. Box 7965, Madison, Wisconsin 53707–7965; telephone: (608) 266–9626.

SUPPLEMENTARY INFORMATION:

Electronic Access

An electronic copy of this document may be downloaded by using a computer, modem and suitable communications software from the Government Printing Offices' Electronic Bulletin Board Service at (202) 512–1661. Internet users may reach the Office of Federal Register's home page at: *http://www.nara.gov/fedreg* and the Government Printing Offices' database at: *http://www.access.gpo.gov/nara.*

Background

The FHWA, in cooperation with the Wisconsin Department of Transportation, will prepare a Draft Environmental Impact Statement (EIS) on a proposal to provide safety, operational and capacity improvements on an approximate 27 kilometer (17 mile) section of STH 83 between CTH ''NN'' at the north limits of the Village of Mukwonago and STH 16, Waukesha County.

This notice is supplementary to the notice of intent, which was published in the **Federal Register** on March 26, 2001 at 66 FR 16520. The purpose of the supplemental notice of intent is to extend the project limits about 6 kilometers (4 miles) at the north terminus. The previous north terminus was Interstate Highway 94. The revised north terminus is STH 16.

To ensure that the full range of issues related to this proposed action are addressed, and all substantive issues are identified, comments and suggestions are invited from all interested parties. Comments or questions concerning this proposed action and the EIS should be directed to FHWA or the Wisconsin Department of Transportation at the addresses provided in the caption **FOR FURTHER INFORMATION CONTACT.**

(Catalog of Federal Domestic Assistance Program Number 20.205, Highway Planning and Construction. The regulations implementing Executive Order 12372 regarding intergovernmental consultation on Federal programs and activities apply to this program).

Authority: 23 U.S.C. 315; 49 CFR 1.48.

Issued on: March 12, 2002.

Philip E. Barnes,

Acting Division Administrator, Federal Highway Administration, Madison, Wisconsin.

[FR Doc. 02–6631 Filed 3–19–02; 8:45 am]

BILLING CODE 4910–22–M

DEPARTMENT OF TRANSPORTATION

Federal Highway Administration.

Environmental Impact Statement: Weber County, UT

AGENCY: Federal Highway Administration (FHWA), DOT.

ACTION: Notice of intent.

SUMMARY: The FHWA is issuing this notice of intent to advise the public that an environmental impact statement will be prepared for a proposed highway project in Weber County, Utah.

FOR FURTHER INFORMATION CONTACT: Ms. Sandra Garcia, Federal Highway Administration, 2520 W. 4700 S. Suite 9A, Salt Lake City, Utah 84118–1847, Telephone: (801) 963–0182; E-mail: *sandra.garcia@fhwa.dot.gov.*

SUPPLEMENTARY INFORMATION: The FHWA, in cooperation with the Utah Department of Transportation (UDOT), will prepare an environmental impact statement (EIS) on a proposal to improve Riverdale Road, Utah State Route 26 (SR–26) from I–15 to Washington Boulevard, in Ogden, Utah. The proposed improvement will involve the reconstruction of the existing SR–26 through the cities of Roy, Riverdale, South Ogden and Ogden for a distance of about 5.3 kilometers (3.3 miles).

Improvements to the corridor are considered necessary to provide for the existing and projected traffic demands. Also, included in this proposal is the replacement of the existing Riverdale Road Interchange bridges over I–84 and I–15. Alternatives under consideration include (1) taking no action, (2) using alternate travel modes, (3) traffic signal and lane striping modifications, and (4) widening the existing 4 lane roadway to 6 lanes.

Letters describing the proposed action and soliciting comments will be sent to appropriate Federal, State, and local agencies, and to private organizations and citizens who have previously expressed or are known to have interest in this proposal. A series of public meetings will be held in the proximity of the project starting April 2002. In addition, a public hearing will be held. Public notice will be given of the time and place of the meeting and hearing. The draft EIS will be available for public and agency review and comment prior to the public hearing.

To ensure that the full range of issues related to this proposed action are addressed and all significant issues identified, comments and suggestions are invited from all interested parties. Comments or questions concerning this proposed action and the EIS should be directed to the FHWA at the address provided above.

(Catalog of Federal Domestic Assistance Program Number 20.205, Highway Planning and Construction. The regulations implementing Executive Order 12372 regarding intergovernmental consultation on Federal programs and activities apply to this program.)

Issued on: March 14, 2002.

William R. Gedris,

Structural/Environmental Engineer, Salt Lake City, Utah.

[FR Doc. 02–6685 Filed 3–15–02; 8:45 am]

BILLING CODE 4910–22–M

DEPARTMENT OF TRANSPORTATION

Federal Railroad Administration

Programmatic Environmental Impact Statement for Passenger Rail Improvements to the Los Angeles to San Diego Rail Corridor

AGENCY: Federal Railroad Administration, (FRA), Department of Transportation (DOT).

ACTION: Notice of intent to prepare an environmental impact statement.

SUMMARY: FRA is issuing this notice to advise the public that FRA will join the California Department of Transportation (Department) in the preparation of a program level environmental impact statement (EIS) and program environmental impact report (EIR) for passenger rail improvements to the Los Angeles to San Diego (LOSSAN) rail corridor. FRA is also issuing this notice to solicit public and agency input into the development of the scope of the EIR/EIS and to advise the public that outreach activities conducted by the Department and its representatives will be considered in the preparation of the EIR/EIS. Alternatives to be evaluated and analyzed in the Program EIR/EIS include (1) take no action (No-Project or No-Build); (2) construction of passenger rail improvements in the LOSSAN rail corridor; and (3) modal alternatives that would include a combination of air and highway improvements. Possible environmental impacts include displacement of commercial and residential properties; disproportionate impacts to minority and low-income populations; community and neighborhood disruption; increased noise along the rail corridor or at airports and along highways; traffic impacts associated with stations or airports; effects to historic properties or archaeological sites; impacts to parks and recreation resources; visual quality effects; exposure to seismic and flood hazards; impacts to water resources, wetlands, and sensitive biological species and habitat; land use compatibility impacts; energy use; and impacts to agricultural lands.

FOR FURTHER INFORMATION CONTACT: For further information regarding the programmatic environmental review, please contact: Mr. Patrick Merrill, Manager, California Department of Transportation, Division of Rail, MS 74, PO Box 942874, Sacramento, CA 94274–0001, (telephone 916–654–7543) or Mr. David Valenstein, Environmental Program Manager, Office of Passenger Programs, Federal Railroad Administration, 1120 Vermont Avenue (Mail Stop 20), Washington, DC 20590, (telephone 202–493–6368).

SUPPLEMENTARY INFORMATION: The Department has determined that improvements to the existing LOSSAN rail corridor may be necessary to meet the expected growth in population and resulting increases in intercity travel demand between Los Angeles and San Diego. As a result of this growth in travel demand, there will be increases in travel delays from the growing congestion on California's highways and at airports. In terms of passenger volumes, the LOSSAN corridor is the second-busiest intercity rail corridor in the nation, after the Northeast Corridor connecting Washington DC, New York and Boston. Amtrak uses the LOSSAN rail corridor for the Pacific Surfliner Service between Los Angeles and San Diego that is supported by the Department. The Southern California Regional Rail Authority also uses the LOSSAN rail Corridor for their Metrolink commuter rail service between Los Angeles and Oceanside and the North County Transit District uses it for their Coaster commuter rail service between Oceanside and San Diego. Finally, the Burlington Northern Santa Fe also uses the LOSSAN rail corridor for freight service.

The California High Speed Rail Authority (Authority) has designated the LOSSAN rail corridor as a potential component of the proposed statewide high speed rail system that the Authority is studying. FRA and the Authority are preparing a separate program EIR/EIS for the proposed statewide train system. The Authority will be considering shared use of the LOSSAN rail corridor and tracks in the program EIR/EIS for the statewide system. The Department has decided to coordinate the public review of proposed improvements to the LOSSAN rail corridor with the Authority's environmental review of the statewide system. The Authority and the Department will share the results of technical studies related to the LOSSAN rail corridor.

Alternatives

An initial system alternatives evaluation will consider all reasonable system alternatives at a broad level of analysis. This analysis will be followed by a more detailed consideration of the most practical and feasible alternatives in the Program EIR/EIS. The alternatives will include:

No-Build Alternative

The take no action (No-Project or No-Build) alternative is defined to serve as the baseline for comparison of all alternatives. The No-Build Alternative represents the state's transportation system (highway, air, and rail) as it exists, and as it would exist after completion of programs or projects currently being implemented. The No-Build Alternative would draw upon the following sources of information:

- State Transportation Improvement Program (STIP)
- Regional Transportation Plans (RTPs) for all modes of travel
- Airport plans
- Passenger rail plans

Passenger Rail Alternative

The LOSSAN Rail Corridor improvements are incremental rail upgrades to the LOSSAN corridor. The upgrade of the LOSSAN rail corridor was previously studied in the Amtrak 20-Year Passenger Transportation Plan issued in March of 2001, which identified major improvements that could be undertaken between San Juan Capistrano and the Santa Fe Depot in downtown San Diego. The improvements to be discussed in the program EIR/EIS include:

- Completion or substantial completion of a second main track in the LOSSAN corridor;
- The consideration of alternative profiles (e.g. trenches, tunnels, viaducts) and/or deviations from the existing LOSSAN corridor in:
- San Juan Capistrano
- San Clemente
- Encinitas
- Del Mar
- Miramar Hill;
- Curve realignment at the Fullerton Junction, the Orange Junction and Dana Point;
- The increase to four main tracks in the corridor between Commerce and Fullerton; and
- Possible alternative profiles (e.g. trenches, tunnels, viaducts), deviations from the existing LOSSAN corridor and/or additional grade-separations as potential mitigation treatments in Orange-Santa Ana, Oceanside and Carlsbad.

FRA and the Department will consider all stations for the existing State-supported Amtrak Surfliner service in the development of LOSSAN rail corridor improvements. These are:

LA Union Station, Fullerton, Anaheim, Santa Ana Transportation Center, Irvine Transportation Center, San Juan Capistrano, Oceanside Transportation Center, Solana Beach, and San Diego Santa Fe Depot. Additional stations and improvements to existing stations will be determined based on ridership potential, system-wide needs, and local planning constraints/conditions. Station needs will be coordinated with local and regional planning agencies, and seamless connectivity with other modes of travel will be emphasized. Potential new station locations will be evaluated in the Program EIR/EIS including: San Diego Airport, and University Town Center (La Jolla).

Other Modal Alternatives

There are currently three main options for intercity travel between the major urban areas of San Diego and Los Angeles: vehicles on the highway system, commercial air service, and conventional passenger trains (Amtrak). The FRA and the Department will evaluate a set of Modal/System Alternatives consisting of expansion of highways and airports at a similar level of investment serving the markets identified for the Passenger Rail Alternative, with no substantial change to intercity and commuter rail systems. The modal alternatives will be defined by assigning the expected incremental travel demand forecasted for the 20-year horizon to the state's transportation infrastructure, then identifying alternatives for accommodating that travel demand without passenger rail improvements.

Scoping and Comments

FRA encourages broad participation in the EIR/EIS process during scoping and subsequent review of the resulting environmental documents. Comments and suggestions are invited from all interested agencies and the public at large to insure the full range of issues related to the proposed action and all reasonable alternatives are addressed and all significant issues are identified. In particular, FRA is interested in determining whether there are areas of environmental concern where there might be the potential for significant impacts identifiable at a program level. Public agencies with jurisdiction are requested to advise the FRA and the Department of the applicable permit and environmental review requirements of each agency, and the scope and content of the environmental information that is germane to the agency's statutory responsibilities in connection with the proposed improvements.

Scoping meetings will be advertised locally and are planned for the following major cities along the LOSSAN rail corridor at the dates and times indicated:

- *Los Angeles:* April 2, 1:30 to 3:30 pm, MTA Bldg, Union Station Room, One Gateway Plaza
- *San Clemente:* April 2, 6:00 to 8:00 pm, San Clemente Inn, 2600 Avenida de Presidente
- *Anaheim:* April 3, 10:00 am to 12:00 pm, City Hall West, Gordon Hoyt Conference Center, 201 S. Anaheim Blvd.
- *Carlsbad:* April 3, 6:00 to 8:00 pm, Carlsbad Senior Center, 799 Pine Street

Persons interested in providing comments on the scope of the program EIR/EIS should do so by April 17, 2002. Comments can be sent in writing to Mr. David Valenstein at the FRA address identified above. Comments may also be addressed to Mr. Patrick Merrill of the Department at their address identified above. Information regarding the environmental review process will also be made available through the Department's rail services Internet site: *http://www.amtrakcalifornia.com/*. Information and documents regarding technical studies will be made available though the Authority's Internet site: *http://www.cahighspeedrail.ca.gov/*.

Issued in Washington DC, on March 14, 2002.

Mark E. Yachmetz,

Associate Administrator for Railroad Development.

[FR Doc. 02–6644 Filed 3–19–02; 8:45 am]

BILLING CODE 4910–06–P

DEPARTMENT OF TRANSPORTATION

Research and Special Programs Administration Office of Hazardous Materials Safety; Notice of Delays in Processing of Exemption Applications

AGENCY: Research and Special Programs Administration, DOT.

ACTION: List of applications delayed more than 180 days.

SUMMARY: In accordance with the requirements of 49 U.S.C. 5117(c), RSPA is publishing the following list of exemption applications that have been in process for 180 days or more. The reason(s) for delay and the expected completion date for action on each application is provided in association with each identified application.

FOR FURTHER INFORMATION CONTACT: J. Suzanne Hedgepath, Director, Office of Hazardous Materials, Exemptions and Approvals, Research and Special Programs Administration, U.S. Department of Transportation, 400 Seventh Street, SW, Washington, DC 20590–0001, (202) 366–4535.

Key to "Reasons for Delay"

1. Awaiting additional information from applicant.
2. Extensive public comment under review.
3. Application is technically complex and is of significant impact or precedent-setting and requires extensive analysis.
4. Staff review delayed by other priority issues or volume of exemption applications.

Meaning of Application Number Suffixes

N—New application.

M—Modification request.

PM—Party to application with modification request.

Issued in Washington, DC, on March 13, 2002.

J. Suzanne Hedgepeth,

Director, Office of Hazardous Materials, Exemptions and Approvals.

NEW EXEMPTION APPLICATIONS

Application No.	Applicant	Reason for delay	Estimated date of completion
11862–N	The BOC Group, Murray Hill, NJ	4	05/31/2002
11927–N	Alaska Marine Lines, Inc., Seattle, WA	4	05/31/2002
12353–N	Monson Companies, South Portland, ME	4	05/31/2002
12381–N	Ideal Chemical & Supply Co., Memphis, TN	4	04/30/2002
12406–N	Occidental Chemical Corporation, Dallas, TX	4	03/29/2002
12412–N	Great Western Chemical Company, Portland, OR	4	03/29/2002
12434–N	Salmon Air, Salmon, ID	4	04/30/2002

NEW EXEMPTION APPLICATIONS—Continued

Application No.	Applicant	Reason for delay	Estimated date of completion
12440–N	Luxfer Inc., Riverside, CA	4	05/31/2002
12456–N	Baker Hughes, Houston, TX	4	05/31/2002
12571–N	Air Products & Chemicals, Inc., Allentown, PA	4	03/29/2002
12588–N	El Dorado Chemical Co., Creve Ceour, MO	4	05/31/2002
12630–N	Chemetall GmbH Gesellschaft, Langelsheim, DE	4	03/29/2002
12634–N	Norman International, Los Angeles, CA	4	05/31/2002
12648–N	Stress Engineering Services, Inc., Houston, TX	4	05/31/2002
12661–N	United Parcel Service (UPS), Atlanta, GA	4	05/31/2002
12690–N	Air Liquide America Corporation, Houston, TX	4	04/30/2002
12701–N	Fuel Cell Components & Intergrators, Inc., Hauppauge, NY	1	04/30/2002
12706–N	Raufoss Composites AS, Raufoss, NO	4	05/31/2002
12716–N	Air Liquide America Corporation, Houston, TX	4	04/30/2002
12718–N	Weldship Corporation, Bethlehem, PA	4	04/30/2002
12741–N	Thunderbird Cylinder Inc., Phoenix, AZ	4	03/29/2002
12751–N	Defense Technology Corporation, Casper, WY	4	03/29/2002
12753–N	Praxair, Inc., Danbury, CT	4	04/30/2002
12800–N	Department of Energy (DOE), Washington, DC	4	04/30/2002
12815–N	FMC Corporation, Opelousas, LA	4	04/30/2002
12820–N	Trinity Manufacturing Hamlet, NC	4	05/31/2002
12844–N	Delphi Automotive Systems, Troy, MI	4	03/29/2002

MODIFICATIONS TO EXEMPTIONS

Application No.	Applicant	Reason for delay	Estimated date of completion
4884–M	Matheson Tri-Gas, East Rutherford, NJ	4	03/29/2002
6805–M	Air Liquide America Corporation, Houston, TX	4	03/29/2002
7007–M	Allied Universal Corp, Miami, FL	4	03/29/2002
7060–M	Federal Express, Memphis, TN	4	04/30/2002
7277–M	Structural Composites Industries, Pomona, CA	4	04/30/2002
8162–M	Structural Composites Industries, Pomona, CA	4	05/31/2002
8308–M	Tradewind Enterprises, Inc., Hillsboro, OR	4	04/30/2002
8308–M	American Courier Express Corporation, Miramar, FL	4	04/30/2002
8554–M	Orica USA, Inc., Englewood, CO	4	04/30/2002
8718–M	Structural Composites Industries, Pomona, CA	4	04/30/2002
9401–M	Societe National de Wagon-Reservoirs, 79009 Paris, FR	4	03/29/2002
9884–M	Puritan Bennett Corp. (Div. of Tyco Healthcare), Indianapolis, IN	4	03/29/2002
10019–M	Structural Composites Industries, Pomona, CA	4	04/30/2002
10832–M	Autoliv ASP, Inc., Ogden, UT	4	04/30/2002
11327–M	Phoenix Services, Inc., Pasadena, MD	4	04/30/2002
11379–M	TRW Automotive Occupant Safety Systems, Washington, MI	4	04/30/2002
11537–M	JCI Jones Chemicals, Inc., Milford, VA	4	05/31/2002
11769–M	Great Western Chemical Company, Portland, OR	4	04/30/2002
11769–M	Great Western Chemical Company, Portland, OR	4	04/30/2002
11769–M	Hydrite Chemical Company, Brookfield, WI	4	05/31/2002
11791–M	The Coleman Company, Inc., Wichita, KS	4	04/30/2002
11850–M	Air Transport Association, Washington, DC	4	05/31/2002
11911–M	Transfer Flow, Inc., Chico, CA	4	05/31/2002
12065–M	Petrolab Company, Latham, NY	4	04/30/2002
12449–M	Chlorine Service Company, Inc., Kingwood, TX	4	03/29/2002
12599–M	Voltaix, Inc., North Branch, NJ	4	05/31/2002

[FR Doc. 02–6761 Filed 3–19–02; 8:45 am]

BILLING CODE 4910–60–M

DEPARTMENT OF TRANSPORTATION

Surface Transportation Board

[STB Finance Docket No. 34175]

Canadian National Railway Company and Wisconsin Central Ltd.—Trackage Rights Exemption—Wisconsin & Southern Railroad Company

Wisconsin & Southern Railroad Company (WSOR), pursuant to a written trackage rights amendment agreement entered into between WSOR and Canadian National Railway Company (CN) (for CN and on behalf of Wisconsin Central Transportation Corporation (WCTC) and WCTC's wholly owned subsidiary Wisconsin Central Ltd. (WCL)),[1] has agreed to grant

[1] CN has been authorized to control WCTC and WCTC's subsidiaries, which include WCL and Fox Valley & Western Ltd. (FVW). *See Canadian*

Continued

nonexclusive overhead trackage rights to WCL over WSOR's main line between milepost 115.9 at Slinger, WI, and milepost 93.2 [2] at North Milwaukee, WI, including trackage rights connecting with FVW's main line at DBR Junction milepost 103.1, and connecting with WCL's Plymouth Sub at North Milwaukee (joint trackage), a distance of approximately 22.7 miles.[3]

The transaction was scheduled to be consummated on or soon after March 7, 2002, the effective date of the exemption (7 days after the notice was filed).

The proposed amendment to the trackage rights would grant CN and WCL the right to use the joint trackage for the operation of its freight trains, locomotives, cabooses and rail cars (including business cars) and roadway equipment in its account over the subject line with WSOR and other carriers that may be permitted to use all or any part of the subject line for, among other things, the purpose of interchanging cars between WCL and Canadian Pacific and Union Pacific Railroad Company, and between WCL and FVW, as well as connecting various WCL and FVW lines and trackage rights.

As a condition to this exemption, any employees affected by the trackage rights will be protected by the conditions imposed in *Norfolk and Western Ry. Co.—Trackage Rights—BN,* 354 I.C.C. 605 (1978), as modified in *Mendocino Coast Ry., Inc.—Lease and Operate,* 360 I.C.C. 653 (1980).

This notice is filed under 49 CFR 1180.2(d)(7). If the notice contains false or misleading information, the exemption is void *ab initio.* Petitions to revoke the exemption under 49 U.S.C. 10502(d) may be filed at any time. The filing of a petition to revoke will not automatically stay the transaction.

An original and 10 copies of all pleadings, referring to STB Finance Docket No. 34175, must be filed with the Surface Transportation Board, Office of the Secretary, Case Control Unit, 1925 K Street, NW., Washington, DC 20423–0001. In addition, a copy of each pleading must be served on Michael J. Barron, Jr., 455 North Cityfront Plaza Drive, Chicago, IL 60211–5317.

Board decisions and notices are available on our website at *WWW.STB.DOT.GOV.''*

Decided: March 13, 2002.

By the Board, David M. Konschnik, Director, Office of Proceedings.

Vernon A. Williams,

Secretary.

[FR Doc. 02–6593 Filed 3–19–02; 8:45 am]

BILLING CODE 4915–00–P

National Railway Company, Grand Truck Corporation, and WC Merger Sub, Inc.—Control—Wisconsin Central Transportation Corporation, Wisconsin Central Ltd., Fox Valley & Western Ltd., Sault Ste. Marie Bridge Company, and Wisconsin Chicago Link Ltd., STB Finance Docket No. 34000 (STB served Sept. 7, 2001).

[2] This is the point where WSOR ownership ends and Canadian Pacific Railway Company (Canadian Pacific) ownership begins.

[3] The trackage rights amend and expand rights already in place between milepost 112.6 at Rugby Junction and milepost 93.4 at North Milwaukee. *See Wisconsin Central Ltd.—Trackage Rights Exemption—Wisconsin & Southern Railroad Company,* STB Finance Docket No. 33600 (STB served June 2, 1998).

DEPARTMENT OF THE TREASURY

Customs Service

List of Foreign Entities Violating Textile Transshipment and Country of Origin Rules

AGENCY: Customs Service, Department of the Treasury.

ACTION: General notice.

SUMMARY: This document notifies the public of foreign entities which have been issued a penalty claim under section 592 of the Tariff Act of 1930, for certain violations of the customs laws. This list is authorized to be published by section 333 of the Uruguay Round Agreements Act.

DATES: This document notifies the public of the semiannual list for the 6-month period starting March 31, 2002, and ending September 30, 2002.

FOR FURTHER INFORMATION CONTACT: For information regarding any of the operational aspects, contact Gregory Olsavsky, Fines, Penalties and Forfeitures Branch, Office of Field Operations, (202) 927–3119. For information regarding any of the legal aspects, contact Willem A. Daman, Office of Chief Counsel, (202) 927–6900.

SUPPLEMENTARY INFORMATION:

Background

Section 333 of the Uruguay Round Agreements Act (URAA) (Pub. L. 103–465, 108 Stat. 4809) (signed December 8, 1994), entitled Textile Transshipments, amended Part V of title IV of the Tariff Act of 1930 by creating a section 592A (19 U.S.C. 1592a), which authorizes the Secretary of the Treasury to publish in the **Federal Register**, on a semiannual basis, a list of the names of any producers, manufacturers, suppliers, sellers, exporters, or other persons located outside the Customs territory of the United States, when these entities and/or persons have been issued a penalty claim under section 592 of the Tariff Act, for certain violations of the customs laws, provided that certain conditions are satisfied.

The violations of the customs laws referred to above are the following: (1) Using documentation, or providing documentation subsequently used by the importer of record, which indicates a false or fraudulent country of origin or source of textile or apparel products; (2) Using counterfeit visas, licenses, permits, bills of lading, or similar documentation, or providing counterfeit visas, licenses, permits, bills of lading, or similar documentation that is subsequently used by the importer of record, with respect to the entry into the Customs territory of the United States of textile or apparel products;

(3) Manufacturing, producing, supplying, or selling textile or apparel products which are falsely or fraudulently labeled as to country of origin or source; and (4) Engaging in practices which aid or abet the transshipment, through a country other than the country of origin, of textile or apparel products in a manner which conceals the true origin of the textile or apparel products or permits the evasion of quotas on, or voluntary restraint agreements with respect to, imports of textile or apparel products.

If a penalty claim has been issued with respect to any of the above violations, and no petition in response to the claim has been filed, the name of the party to whom the penalty claim was issued will appear on the list. If a petition or supplemental petition for relief from the penalty claim is submitted under 19 U.S.C. 1618, in accord with the time periods established by §§171.2 and 171.61, Customs Regulations (19 CFR 171.2, 171.61) and the petition is subsequently denied or the penalty is mitigated, and no further petition, if allowed, is received within 60 days of the denial or allowance of mitigation, then the administrative action shall be deemed to be final and administrative remedies will be deemed to be exhausted. Consequently, the name of the party to whom the penalty claim was issued will appear on the list. However, provision is made for an appeal to the Secretary of the Treasury by the person named on the list, for the removal of its name from the list. If the Secretary finds that such person or entity has not committed any of the enumerated violations for a period of not less than 3 years after the date on which the person or entity's name was published, the name will be removed from the list as of the next publication of the list.

Reasonable Care Required

Section 592A also requires any importer of record entering, introducing, or attempting to introduce into the

commerce of the United States textile or apparel products that were either directly or indirectly produced, manufactured, supplied, sold, exported, or transported by such named person to show, to the satisfaction of the Secretary, that such importer has exercised reasonable care to ensure that the textile or apparel products are accompanied by documentation, packaging, and labeling that are accurate as to its origin. Reliance solely upon information regarding the imported product from a person named on the list is clearly not the exercise of reasonable care. Thus, the textile and apparel importers who have some commercial relationship with one or more of the listed parties must exercise a degree of reasonable care in ensuring that the documentation covering the imported merchandise, as well as its packaging and labeling, is accurate as to the country of origin of the merchandise. This degree of reasonable care must involve reliance on more than information supplied by the named party.

In meeting the reasonable care standard when importing textile or apparel products and when dealing with a party named on the list published pursuant to section 592A of the Tariff Act of 1930, an importer should consider the following questions in attempting to ensure that the documentation, packaging, and labeling is accurate as to the country of origin of the imported merchandise. The list of questions is not exhaustive but is illustrative.

(1) Has the importer had a prior relationship with the named party?

(2) Has the importer had any detentions and/or seizures of textile or apparel products that were directly or indirectly produced, supplied, or transported by the named party?

(3) Has the importer visited the company's premises and ascertained that the company has the capacity to produce the merchandise?

(4) Where a claim of an origin conferring process is made in accordance with 19 CFR 102.21, has the importer ascertained that the named party actually performed the required process?

(5) Is the named party operating from the same country as is represented by that party on the documentation, packaging or labeling?

(6) Have quotas for the imported merchandise closed or are they nearing closing from the main producer countries for this commodity?

(7) What is the history of this country regarding this commodity?

(8) Have you asked questions of your supplier regarding the origin of the product?

(9) Where the importation is accompanied by a visa, permit, or license, has the importer verified with the supplier or manufacturer that the visa, permit, and/or license is both valid and accurate as to its origin? Has the importer scrutinized the visa, permit or license as to any irregularities that would call its authenticity into question?

The law authorizes a semiannual publication of the names of the foreign entities and/or persons. On October 10, 2001, Customs published a Notice in the **Federal Register** (66 FR 51734) which identified 13 (thirteen) entities which fell within the purview of section 592A of the Tariff Act of 1930.

592A List

For the period ending March 30, 2002, Customs has identified 10 (ten) foreign entities that fall within the purview of section 592A of the Tariff Act of 1930. This list reflects no new entities and three removals to the 13 entities named on the list published on October 10, 2001. The parties on the current list were assessed a penalty claim under 19 U.S.C. 1592, for one or more of the four above-described violations. The administrative penalty action was concluded against the parties by one of the actions noted above as having terminated the administrative process.

The names and addresses of the 10 foreign parties which have been assessed penalties by Customs for violations of section 592 are listed below pursuant to section 592A. This list supersedes any previously published list. The names and addresses of the 10 foreign parties are as follows (the parenthesis following the listing sets forth the month and year in which the name of the company was first published in the **Federal Register**):

Austin Pang Gloves & Garments Factory, Ltd., Jade Heights, 52 Tai Chung Kiu Road, Flat G, 19/F, Shatin, New Territories, Hong Kong. (10/99)

Beautiful Flower Glove Manufactory, Kar Wah Industrial Building, 8 Leung Yip Street, Room 10–16, 4/F, Yuen Long, New Territories, Hong Kong. (10/99)

BF Manufacturing Company, Kar Wah Industrial Building, Leung Yip Street, Flat 13, 4/F, Yeun Long, New Territories, Hong Kong. (10/99)

Ease Keep, Ltd., 750 Nathan Road, Room 115, Kowloon, Hong Kong. (10/99)

Everlite Manufacturing Company, P.O. Box 90936, Tsimshatsui, Kowloon, Hong Kong (3/01).

Fabrica de Artigos de Vestuario E-Full, Lda. Rua Um doi Bairro da Concordia, Deificio Industrial Vang Tai, 8th Floor, A–D, Macau. (10/99)

Fabrica de Artigos de Vestuario Fan Wek Limitada, Av. Venceslau de Morais, S/N 14 B–C, Centro Ind. Keck Seng (Torre 1), Macau. (10/99)

Fairfield Line (HK) Co. Ltd., 60–66 Wing Tai Commer., Bldg. 1/F, Sheung Wan, Hong Kong (3/01).

G.P. Wedding Service Centre, Lee Hing Industrial Building, 10 Cheung Yue Street 11th Floor, Cheung Sha Wan, Kowloon, Hong Kong. (10/00)

Lucky Mind Industrial Limited, Lincoln Centre, 20 Yip Fung Street, Flat 11, 5/F, Fan Ling, New Territories, Hong Kong. (10/99)

Any of the above parties may petition to have its name removed from the list. Such petitions, to include any documentation that the petitioner deems pertinent to the petition, should be forwarded to the Assistant Commissioner, Office of Field Operations, United States Customs Service, 1300 Pennsylvania Avenue, NW., Washington, DC 20229.

Additional Foreign Entities

In the October 10, 2001, **Federal Register** notice, Customs also solicited information regarding the whereabouts of 5 foreign entities, which were identified by name and known address, concerning alleged violations of section 592. Persons with knowledge of the whereabouts of those 5 entities were requested to contact the Assistant Commissioner, Office of Field Operations, United States Customs Service, 1300 Pennsylvania Avenue, NW., Washington, DC 20229.

In this document, a new list is being published which contains the names and last known addresses of 3 entities. This reflects the removal of two entities from the list of 5 entities published on October 10, 2001.

Customs is soliciting information regarding the whereabouts of the following 3 foreign entities concerning alleged violations of section 592. Their names and last known addresses are listed below (the parenthesis following the listing sets forth the month and year in which the name of the company was first published in the **Federal Register**):

Au Mi Wedding Dresses Company, Dragon Industry Building, 98, King Law Street, Unit F, 9/F, Lai Chi Kok, Kowloon, Hong Kong. (10/99)

Golden Wheel Garment Factory, Flat A, 10/F, Tontex Industrial Building, 2–4 Sheung Hei Street, San Po

Kong, Kowloon, Hong Kong. (10/99)
Lai Cheong Gloves Factory, Kar Wah Industrial Building, 8 Leung Yip Street, Room 101, 1–F, Yuen Long, New Territories, Hong Kong. (3/00)

If you have any information as to a correct mailing address for any of the above 3 firms, please send that information to the Assistant Commissioner, Office of Field Operations, U.S. Customs Service, 1300 Pennsylvania Avenue, NW., Washington, DC 20229.

Dated: March 14, 2002.

Bonni G. Tischler,

Assistant Commissioner, Office of Field Operations.

[FR Doc. 02–6659 Filed 3–19–02; 8:45 am]

BILLING CODE 4820–02–P

DEPARTMENT OF THE TREASURY

Office of Thrift Supervision

Proposed Agency Information Collection Activities; Comment Request

AGENCY: Office of Thrift Supervision (OTS), Treasury.

ACTION: Notice and request for comment.

SUMMARY: The Department of the Treasury, as part of its continuing effort to reduce paperwork and respondent burden, invites the general public and other Federal agencies to comment on proposed and continuing information collections, as required by the Paperwork Reduction Act of 1995, 44 U.S.C. 3507. The Office of Thrift Supervision within the Department of the Treasury will submit the proposed information collection requirement described below to the Office of Management and Budget (OMB) for review, as required by the Paperwork Reduction Act. Today, OTS is soliciting public comments on the proposal.

DATES: Submit written comments on or before May 20, 2002.

ADDRESSES: Send comments, referring to the collection by title of the proposal or by OMB approval number, to Information Collection Comments, Chief Counsel's Office, Office of Thrift Supervision, 1700 G Street, NW., Washington, DC 20552; send a facsimile transmission to (202) 906–6518; or send an e-mail to *infocollection.comments@ots.treas.gov.* OTS will post comments and the related index on the OTS Internet Site at *www.ots.gov.* In addition, interested persons may inspect comments at the Public Reading Room, 1700 G Street, NW., by appointment. To make an appointment, call (202) 906–5922, send an e-mail to *publicinfo@ots.treas.gov,* or send a facsimile transmission to (202) 906–7755.

FOR FURTHER INFORMATION CONTACT: You can request additional information about this proposed information collection from Nadine Washington, Information Systems, Administration & Finance, (202) 906–6706, Office of Thrift Supervision, 1700 G Street, NW., Washington, DC 20552.

SUPPLEMENTARY INFORMATION: OTS may not conduct or sponsor an information collection, and respondents are not required to respond to an information collection, unless the information collection displays a currently valid OMB control number. As part of the approval process, we invite comments on the following information collection.

Comments should address one or more of the following points:

a. Whether the proposed collection of information is necessary for the proper performance of the functions of OTS;

b. The accuracy of OTS's estimate of the burden of the proposed information collection;

c. Ways to enhance the quality, utility, and clarity of the information to be collected;

d. Ways to minimize the burden of the information collection on respondents, including through the use information technology.

We will summarize the comments that we receive and include them in the OTS request for OMB approval. All comments will become a matter of public record. In this notice, OTS is soliciting comments concerning the following information collection.

Title of Proposal: Savings and Loan Holding Company Registration Statement—H–(b)10.

OMB Number: 1550–0020.

Form Number: H–(b)10.

Regulation requirement: 12 CFR 584.

Description: This information collection is used to determine a savings and loan holding company's adherence to the statutes, regulations, and conditions of approval to acquire an insured institution and whether any of the holding company's activities would be injurious to the operation of the subsidiary savings association.

Type of Review: Renewal.

Affected Public: Savings Associations.

Estimated Number of Respondents: 72.

Estimated Frequency of Response: Annually.

Estimated Burden Hours per Response: 8 hours.

Estimated Total Burden: 576 hours.

Clearance Officer: Sally W. Watts, (202) 906–7380, Office of Thrift Supervision, 1700 G Street, NW., Washington, DC 20552.

OMB Reviewer: Alexander Hunt, (202) 395–7860, Office of Management and Budget, Room 10202, New Executive Office Building, Washington, DC 20503.

Dated: March 13, 2002.

Deborah Dakin,

Deputy Chief Counsel, Regulations and Legislation Division.

[FR Doc. 02–6640 Filed 3–19–02; 8:45 am]

BILLING CODE 6720–01–P

DEPARTMENT OF VETERANS AFFAIRS

Veterans' Advisory Committee on Education; Notice of Meeting

The Department of Veterans Affairs (VA) gives notice under the Federal Advisory Committee Act, Public law 92–463, that a meeting of the Veterans' Advisory Committee on Education, authorized by 38 U.S.C. 3692, will be held March 25 and 26, 2002. The meeting will take place at the offices of the Servicemembers Opportunity Colleges, 1307 New York Avenue, Washington, DC. On Monday, March 25, the meeting will begin at 9 a.m. and end at 4 p.m. On Tuesday, March 26, the meeting will begin at 9 a.m. and end at 12 p.m. The purpose of the Committee is to assist in the evaluation of existing programs and services, and recommend needed programs and services.

On March 25, the meeting will begin with opening remarks and an overview by Dr. Steve Kime, Committee Chairman. The Committee will discuss the Partnership for Veterans' Education and recent legislation, including new standards and guidelines to be created. In the afternoon, the Committee will receive briefings on the Veterans' Claims Processing Task Force's report; GAO Study 02–368, Veterans' Education Benefits Comparison of Federal Assistance Awarded to Veterans and Nonveterans Students; and Access and Technology, Web Portal Concept. On March 26, the Committee will review major issues addressed by the Committee in the past and their current status and any new issues they feel should be introduced. The meeting will conclude with a discussion regarding developing the Committee's report.

The meeting is open to the public. Interested persons may attend, appear before, or file statements with the Committee. Statements, if in written form, may be filed before or within 10 days after the meeting. Oral statements will be heard at 9:30 a.m., Tuesday, March 26, 2002. Those wishing to

attend or file written statements should contact Mr. Michael Yunker, Education Strategy Development (224B), Department of Veterans Affairs, 810 Vermont Avenue, NW, Washington, DC 20420, phone (202) 273–7187.

Dated: March 13, 2002.

By Direction of the Secretary:

Nora E. Egan,

Committee Management Officer.

[FR Doc. 02–6769 Filed 3–19–02; 8:45 am]

BILLING CODE 8320–01–M

DEPARTMENT OF VETERANS AFFAIRS

Privacy Act of 1974; Report of Matching Program

AGENCY: Department of Veterans Affairs.

ACTION: Notice.

SUMMARY: Notice is hereby given that the Department of Veterans Affairs (VA) intends to continue a recurring computer program matching Social Security Administration (SSA) records with VA pension and parents' dependency and indemnity compensation (DIC) records.

The goal of this match is to compare income and employment status as reported to VA with wage records maintained by SSA.

VA plans to match records of veterans, surviving spouses and children who receive pension, and parents who receive DIC, with SSA income tax return information as it relates to earned income. VA will also match records of veterans receiving disability compensation at the 100 percent rate based on unemployability with SSA income tax return information as it relates to earned income.

VA will use this information to adjust VA benefit payments as prescribed by law. The proposed matching program will enable VA to ensure accurate reporting of income and employment status.

Records To Be Matched: VA records involved in the match are the VA system of records, Compensation, Pension, Education and Rehabilitation Records—VA (58 VA 21/22). The SSA records will come from the Earnings Recording and Self-Employment Income System, SSA/OSR, 60–0059.

This notice is provided in accordance with the provisions of the Privacy Act of 1974 as amended by Public Law 100–503.

DATES: The match will start no sooner than April 19, 2002, and end not more than 18 months after the agreement is properly implemented by the parties. The involved agencies' Data Integrity Boards (DIB) may extend this match for 12 months provided the agencies certify to their DIBs within three months of the ending date of the original match that the matching program will be conducted without change and that the matching program has been conducted in compliance with the original matching program.

ADDRESSES: Interested persons are invited to submit written comments, suggestions, or objections regarding the proposal to conduct the matching program to the Director, Office of Regulations Management (02D), Department of Veterans Affairs, 810 Vermont Avenue, NW, Room 1154, Washington, DC 20420. All written comments received will be available for public inspection in the Office of Regulations Management, Room 1158, 810 Vermont Avenue, NW, Washington, DC 20420, between 8 a.m. and 4:30 p.m., Monday through Friday except holidays.

FOR FURTHER INFORMATION CONTACT: Paul Trowbridge (212B), (202) 273–7218.

SUPPLEMENTARY INFORMATION: This information is required by Title 5 U.S.C. subsection 552a(e)(12), the Privacy Act of 1974. A copy of this notice has been provided to both Houses of Congress and OMB.

Approved: March 5, 2002.

Anthony J. Principi,

Secretary of Veterans Affairs.

[FR Doc. 02–6632 Filed 3–19–02; 8:45 am]

BILLING CODE 8320–01–P

Federal Register

Wednesday,
March 20, 2002

Part II

Department of Defense
General Services Administration
National Aeronautics and Space Administration

48 CFR Parts 1, 2, et al.
Federal Acquistion Circular and Regulations; Final Rules

DEPARTMENT OF DEFENSE

GENERAL SERVICES ADMINISTRATION

NATIONAL AERONAUTICS AND SPACE ADMINISTRATION

48 CFR Chapter 1

Federal Acquisition Circular 2001–06; Introduction

AGENCIES: Department of Defense (DoD), General Services Administration (GSA), and National Aeronautics and Space Administration (NASA).

ACTION: Summary presentation of final rules.

SUMMARY: This document summarizes the Federal Acquisition Regulation (FAR) rules agreed to by the Civilian Agency Acquisition Council and the Defense Acquisition Regulations Council in this Federal Acquisition Circular (FAC) 2001–06. A companion document, the Small Entity Compliance Guide (SECG), follows this FAC. The FAC, including the SECG, is available via the Internet at *http://www.arnet.gov/far.*

DATES: For effective dates and comment dates, see separate documents which follow.

FOR FURTHER INFORMATION CONTACT: The FAR Secretariat, Room 4035, GS Building, Washington, DC 20405, (202) 501–4755, for information pertaining to status or publication schedules. For clarification of content, contact the analyst whose name appears in the table below in relation to each FAR case or subject area. Please cite FAC 2001–06 and specific FAR case number(s). Interested parties may also visit our website at *http://www.arnet.gov/far.*

Item	Subject	FAR Case	Analyst
I	Commercial Items—Standard Form 1449	2000–012	Moss.
II	Definitions for ''Contract Action'' and ''Contracting Action''	2000–402	Moss.
III	Definitions for Sealed Bid and Negotiated Procurements	2000–403	DeStefano.
IV	Procurement Integrity Rewrite	1998–024	DeStefano.
V	Acquisition of Helium	2000–008	Nelson.
VI	HUBZone Program Applicability	2001–003	Cundiff.
VII	Application of Labor Clauses	1999–612	Nelson.
VIII	Technical Amendments.		

SUPPLEMENTARY INFORMATION: Summaries for each FAR rule follow. For the actual revisions and/or amendments to these FAR cases, refer to the specific item number and subject set forth in the documents following these item summaries.

FAC 2001–06 amends the FAR as specified below:

Item I—Commercial Items SF 1449 (FAR Case 2000–012)

Standard Form 1449, Solicitation/Contract/Order for Commercial Items, is prescribed by the FAR for the acquisition of commercial items. This final rule makes several minor revisions to the form, including the addition of a block to indicate that the acquisition is a HUBZone set-aside, the substitution of a NAICS code for the SIC code, the notation that award is made only on the offeror's items specifically listed in block 29, and the addition of several blocks in the area of the form used as a receiving report by the Government. All of the changes involve blocks that are completed by the Government.

Item II—Definitions for ''Contract Action'' and ''Contracting Action'' (FAR Case 2000–402)

This final rule amends the FAR to provide for consistent use of the term ''contract action.'' The rule changes the term ''contracting action'' to ''contract action'' throughout the FAR and makes other editorial changes to clarify the text.

Item III—Definitions for Sealed Bid and Negotiated Procurements (FAR Case 2000–403)

This final rule amends the FAR to clarify definitions that are used for sealed bid and negotiated procurements. The final rule—

- Moves the definitions of ''bid sample'' and ''descriptive literature'' from FAR Part 14 to FAR 2.101 because the definitions apply to more than one FAR part, *e.g.,* Parts 14 and 15;
- Amends those definitions and the definition of ''offer'' in accordance with plain language guidelines;
- Revises applicable provisions in FAR Part 52 to conform with the new definitions;
- Adds a new definition for ''solicitation'' at FAR 2.101; and
- Provides definitions for ''bid'' and ''bidder'' in FAR Part 28 because, as used in that part, the terms address sealed bid and negotiated acquisitions.

The rule clarifies terminology used in FAR 15.201(f), 15.609(e), and 35.007(g). Where we mean an entity that is actively seeking a contract, we use the term ''prospective offeror.'' However, those cites describe processes that are set up to ensure fair and open competition. Therefore, any interested party is able to participate, including parties that the Government has not yet identified. Therefore, the rule uses the more general term ''potential offeror.''

Item IV—Procurement Integrity Rewrite (FAR Case 1998–024)

This final rule amends FAR parts 2, 3, 4, 9, 15, and 52 to rewrite the procurement integrity coverage (the implementation of section 27 of the Office of Federal Procurement Policy Act (41 U.S.C. 423) (more commonly referred to as the Procurement Integrity Act)) in plain language.

FAR 3.104 implements prohibitions, restrictions, and other requirements of the Procurement Integrity Act that are placed on certain agency officials that participate in Federal agency procurements. However, other statutes and regulations also govern the conduct of Government employees. While specific guidance pertaining to the Procurement Integrity Act at FAR 3.104 does not implement these other statutes and regulations, the rule does add guidance to alert these agency officials that they should seek advice from agency ethics officials before engaging in certain activities that could have serious consequences, including criminal prosecution.

These revisions to FAR 3.104 do not change either the requirements of the Procurement Integrity Act or change, in any manner, who is covered by, or the activities covered in, Office of Government Ethics regulations interpreting conflict of interest statutes.

Item V—Acquisition of Helium (FAR Case 2000–008)

This final rule revises FAR Subpart 8.5 and the clause at 52.208–8 to

implement the Department of the Interior final rule regarding helium contracts that was published in the **Federal Register** at 63 FR 66760, December 3, 1998. The final rule—

- Changes the definitions;
- Eliminates the requirement for certain contractors and subcontractors to submit helium forecasts; and
- Establishes the requirement that contractors and subcontractors under contracts with a major helium requirement must report purchases of helium from Federal helium suppliers.

Item VI—HUBZone Program Applicability (FAR Case 2001–003)

The HUBZone Act of 1997 expanded the applicability of the HUBZONE Program to all agencies covered by the FAR after September 30, 2000, and is currently reflected in the FAR. This rule amends the FAR to simplify the existing language at FAR Parts 12, 19, and 52.

Item VII—Application of Labor Clauses (FAR Case 1999–612)

This final rule affects all contracting officers who use the FAR. The rule—

- Moves the Prohibition of Segregated Facilities clause from the list at paragraph (b), to the list at paragraph (a), of the clause at 52.213–4 and clarifies the existing requirements of 41 CFR 60–1.8, promulgated by the Department of Labor under E.O. 11246. The Prohibition of Segregated Facilities clause must be included in contracts whenever the Equal Opportunity clause (FAR 52.222–26) is included.
- Moves the Equal Opportunity clause from the list at paragraph (b), to the list at paragraph (a), of the clause at 52.213–4 because the clause must be included in almost all contracts, even those under $10,000, in accordance with the requirements at FAR 22.802(a)(1) and 22.807(b). Even though included, the clause is inapplicable unless the aggregate value of contracts and subcontracts awarded to the contractor exceeds $10,000 in a year.
- Makes other revisions to the clause at FAR 52.222–26, Equal Opportunity, to include a definition of ''United States'' and incorporate the exception for work performed outside the United States.

Item VIII—Technical Amendments

These amendments update sections and make editorial changes at FAR 1.404, 5.207, 6.302–5, 9.104–3, 31.101, 52.219–19, and 52.219–20.

Dated: March 6, 2002.

Al Matera,

Director, Acquisition Policy Division.

Federal Acquisition Circular

Federal Acquisition Circular (FAC) 2001–06 is issued under the authority of the Secretary of Defense, the Administrator of General Services, and the Administrator for the National Aeronautics and Space Administration.

Unless otherwise specified, all Federal Acquisition Regulation (FAR) and other directive material contained in FAC 2001–06 are effective April 4, 2002.

Dated: March 4, 2002.

Deidre A. Lee,

Director, Defense Procurement.

Dated: March 4, 2002.

David A. Drabkin,

Deputy Associate Administrator, Office of Acquisition Policy, General Services Administration.

Dated: March 1, 2002.

Tom Luedtke,

Assistant Administrator for Procurement, National Aeronautics and Space Administration.

[FR Doc. 02–5819 Filed 3–19–02; 8:45 am]

BILLING CODE 6820–EP–P

DEPARTMENT OF DEFENSE

GENERAL SERVICES ADMINISTRATION

NATIONAL AERONAUTICS AND SPACE ADMINISTRATION

48 CFR Parts 1 and 53

[FAC 2001–06; FAR Case 2000–012; Item I]

RIN 9000–AJ31

Federal Acquisition Regulation; Commercial Items—Standard Form 1449

AGENCIES: Department of Defense (DoD), General Services Administration (GSA), and National Aeronautics and Space Administration (NASA).

ACTION: Final rule.

SUMMARY: The Civilian Agency Acquisition Council and the Defense Acquisition Regulations Council (Councils) have agreed on a final rule amending the Federal Acquisition Regulation (FAR) to update Standard Form 1449, Solicitation/Contract/Order for Commercial Items.

DATES: *Effective Date:* April 4, 2002.

FOR FURTHER INFORMATION CONTACT: The FAR Secretariat, Room 4035, GS Building, Washington, DC 20405, (202) 501–4755, for information pertaining to status or publication schedules. For clarification of content, contact Ms. Victoria Moss, Procurement Analyst, at (202) 501–4764. Please cite FAC 2001–06, FAR case 2000–012.

SUPPLEMENTARY INFORMATION:

A. Background

Standard Form 1449, Solicitation/Contract/Order for Commercial Items, is prescribed by the FAR for the acquisition of commercial items. This final rule makes several minor revisions to the form, including the addition of a block to indicate that the acquisition is a HUBZone set-aside, the substitution of a NAICS code for the SIC code, the notation that award is made only on the offeror's items specifically listed in block 29, and the addition of several blocks in the area of the form used as a receiving report by the Government. None of the changes involve blocks that are completed by the public.

This is not a significant regulatory action, and therefore, was not subject to review under Section 6(b) of Executive Order 12866, Regulatory Planning and Review, dated September 30, 1993. This rule is not a major rule under 5 U.S.C. 804.

B. Regulatory Flexibility Act

This final rule does not constitute a significant FAR revision within the meaning of FAR 1.501 and Public Law 98–577, and publication for public comments is not required. However, the Councils will consider comments from small entities concerning the affected FAR parts 1 and 52 in accordance with 5 U.S.C. 610. Interested parties must submit such comments separately and should cite 5 U.S.C. 601, *et seq.* (FAC 2001–06, FAR case 2000–012), in correspondence.

C. Paperwork Reduction Act

The Paperwork Reduction Act does not apply because these changes to the FAR do not impose additional information collection requirements to the paperwork burden previously approved under OMB Control Number 9000–0136. The previous edition of the form indicated that the public reporting burden related to the form had been cleared under OMB No. 9000–0136. That statement has been removed from this edition because OMB Clearance 9000–0136 covers information collections unique to commercial item acquisition. It does not cover the information required by this form. This form is primarily completed by the Government. The contractor/offeror fills in only its name, address, and proposed prices. Those pieces of information do not require clearance in the FAR under

the Paperwork Reduction Act. Office of Management and Budget Number 9000-0136 remains valid for the other information collection requirements related to the acquisition of commercial items.

List of Subjects in 48 CFR Parts 1 and 53

Government procurement.

Dated: March 6, 2002.

Al Matera,

Director, Acquisition Policy Division.

Therefore, DoD, GSA, and NASA amend 48 CFR parts 1 and 53 as set forth below:

1. The authority citation for 48 CFR parts 1 and 53 continues to read as follows:

Authority: 40 U.S.C. 486(c); 10 U.S.C. chapter 137; and 42 U.S.C. 2473(c).

PART 1—FEDERAL ACQUISITION REGULATIONS SYSTEM

1.106 [Amended]

2. Amend section 1.106 in the table by removing the FAR segment ''SF 1449'' and its corresponding OMB Control Number ''9000–0136''.

PART 53—FORMS

53.212 [Amended]

3. Amend section 53.212 by removing ''(*OCT 1995*)'' and adding ''(Rev. 4/02)'' in its place.

53.213 [Amended]

4. Amend section 53.213 in paragraph (a) and the introductory text of paragraph (f) by removing ''(*10/95 Ed.*)'' and adding ''(Rev. *4/02*)'' in its place.

5. Revise section 53.301–1449 to read as follows.

53.301–1449 Solicitation/Contract/Order for Commercial Items.

BILLING CODE 6820–EP–P

SOLICITATION/CONTRACT/ORDER FOR COMMERCIAL ITEMS
OFFEROR TO COMPLETE BLOCKS 12, 17, 23, 24, & 30

1. REQUISITION NUMBER | PAGE 1 OF

2. CONTRACT NO. | 3. AWARD/EFFECTIVE DATE | 4. ORDER NUMBER | 5. SOLICITATION NUMBER | 6. SOLICITATION ISSUE DATE

7. FOR SOLICITATION INFORMATION CALL: | a. NAME | b. TELEPHONE NUMBER *(No collect calls)* | 8. OFFER DUE DATE/ LOCAL TIME

9. ISSUED BY | CODE

10. THIS ACQUISITON IS
- ☐ UNRESTRICTED
- ☐ SET ASIDE: % FOR
  - ☐ SMALL BUSINESS
  - ☐ HUBZONE SMALL BUSINESS
- ☐ 8(A)

NAICS:
SIZE STANDARD:

11. DELIVERY FOR FOB DESTINATION UNLESS BLOCK IS MARKED
☐ SEE SCHEDULE

12. DISCOUNT TERMS

☐ 13a. THIS CONTRACT IS A RATED ORDER UNDER DPAS (15 CFR 700)

13b. RATING

14. METHOD OF SOLICITATION
☐ RFQ ☐ IFB ☐ RFP

15. DELIVER TO | CODE

16. ADMINISTERED BY | CODE

17a. CONTRACTOR/ OFFEROR | CODE | FACILITY CODE

TELEPHONE NO.

18a. PAYMENT WILL BE MADE BY | CODE

☐ 17b. CHECK IF REMITTANCE IS DIFFERENT AND PUT SUCH ADDRESS IN OFFER

18b. SUBMIT INVOICES TO ADDRESS SHOWN IN BLOCK 18a UNLESS BLOCK BELOW IS CHECKED ☐ SEE ADDENDUM

19. ITEM NO.	20. SCHEDULE OF SUPPLIES/SERVICES	21. QUANTITY	22. UNIT	23. UNIT PRICE	24. AMOUNT
	(Use Reverse and/or Attach Additional Sheets as Necessary)				

25. ACCOUNTING AND APPROPRIATION DATA

26. TOTAL AWARD AMOUNT *(For Govt. Use Only)*

☐ 27a. SOLICITATION INCORPORATES BY REFERENCE FAR 52.212-1, 52.212-4. FAR 52.212-3 AND 52.212-5 ARE ATTACHED. ADDENDA ☐ ARE ☐ ARE NOT ATTACHED

☐ 27b. CONTRACT/PURCHASE ORDER INCORPORATES BY REFERENCE FAR 52.212-4. FAR 52.212-5 IS ATTACHED ADDENDA ☐ ARE ☐ ARE NOT ATTACHED

☐ 28. CONTRACTOR IS REQUIRED TO SIGN THIS DOCUMENT AND RETURN _____ COPIES TO ISSUING OFFICE. CONTRACTOR AGREES TO FURNISH AND DELIVER ALL ITEMS SET FORTH OR OTHERWISE IDENTIFIED ABOVE AND ON ANY ADDITIONAL SHEETS SUBJECT TO THE TERMS AND CONDITIONS SPECIFIED HEREIN.

☐ 29. AWARD OF CONTRACT: REF. _____ OFFER DATED _____. YOUR OFFER ON SOLICITATION (BLOCK 5), INCLUDING ANY ADDITIONS OR CHANGES WHICH ARE SET FORTH HEREIN, IS ACCEPTED AS TO ITEMS:

30a. SIGNATURE OF OFFEROR/CONTRACTOR

31a. UNITED STATES OF AMERICA *(SIGNATURE OF CONTRACTING OFFICER)*

30b. NAME AND TITLE OF SIGNER *(Type or print)* | 30c. DATE SIGNED

31b. NAME OF CONTRACTING OFFICER *(Type or print)* | 31c. DATE SIGNED

AUTHORIZED FOR LOCAL REPRODUCTION
PREVIOUS EDITION IS NOT USABLE

STANDARD FORM 1449 (REV. 4/2002)
Prescribed by GSA - FAR (48 CFR) 53.212

19. ITEM NO.	20. SCHEDULE OF SUPPLIES/SERVICES	21. QUANTITY	22. UNIT	23. UNIT PRICE	24. AMOUNT

32a. QUANTITY IN COLUMN 21 HAS BEEN

☐ RECEIVED ☐ INSPECTED ☐ ACCEPTED, AND CONFORMS TO THE CONTRACT, EXCEPT AS NOTED: _____

32b. SIGNATURE OF AUTHORIZED GOVERNMENT REPRESENTATIVE	32c. DATE	32d. PRINTED NAME AND TITLE OF AUTHORIZED GOVERNMENT REPRESENTATIVE

32e. MAILING ADDRESS OF AUTHORIZED GOVERNMENT REPRESENTATIVE	32f. TELPHONE NUMBER OF AUTHORZED GOVERNMENT REPRESENTATIVE
	32g. E-MAIL OF AUTHORIZED GOVERNMENT REPRESENTATIVE

33. SHIP NUMBER	34. VOUCHER NUMBER	35. AMOUNT VERIFIED CORRECT FOR	36. PAYMENT	37. CHECK NUMBER
PARTIAL FINAL			☐ COMPLETE ☐ PARTIAL ☐ FINAL	
38. S/R ACCOUNT NUMBER	39. S/R VOUCHER NUMBER	40. PAID BY		

41a. I CERTIFY THIS ACCOUNT IS CORRECT AND PROPER FOR PAYMENT		42a. RECEIVED BY *(Print)*	
41b. SIGNATURE AND TITLE OF CERTIFYING OFFICER	41c. DATE	42b. RECEIVED AT *(Location)*	
		42c. DATE REC'D *(YY/MM/DD)*	42d. TOTAL CONTAINERS

STANDARD FORM 1449 (REV. 4/2002) **BACK**

[FR Doc. 02–5820 Filed 3–19–02; 8:45 am]
BILLING CODE 6820–EP–C

DEPARTMENT OF DEFENSE

GENERAL SERVICES ADMINISTRATION

NATIONAL AERONAUTICS AND SPACE ADMINISTRATION

48 CFR Parts 1, 5, 6, 8, 17, 19, 32, and 52

[FAC 2001–06; FAR Case 2000–402; Item II]

RIN 9000–AI76

Federal Acquisition Regulation; Definitions for ''Contract Action'' and ''Contracting Action''

AGENCIES: Department of Defense (DoD), General Services Administration (GSA), and National Aeronautics and Space Administration (NASA).

ACTION: Final rule.

SUMMARY: The Civilian Agency Acquisition Council and the Defense Acquisition Regulations Council (Councils) have agreed to amend the Federal Acquisition Regulation (FAR) to provide for consistent use of the term ''contract action'' and to make other editorial changes to clarify the text.

DATES: *Effective Date:* April 4, 2002.

FOR FURTHER INFORMATION CONTACT: The FAR Secretariat, Room 4035, GS Building, Washington, DC 20405, (202) 501–4755, for information pertaining to status or publication schedules. For clarification of content, contact Ms. Victoria Moss, Procurement Analyst, at (202) 501–4764. Please cite FAC 2001–06, FAR case 2000–402.

SUPPLEMENTARY INFORMATION:

A. Background

This rule amends the FAR to provide for consistent use of the term ''contract action.'' The rule changes the term ''contracting action'' to ''contract action'' throughout the FAR and makes other editorial changes to clarify the text.

DoD, GSA, and NASA published a proposed rule in the **Federal Register** on May 31, 2000 (65 FR 34894). One respondent submitted comments on the proposed rule. Based on those comments, the rule was changed to provide for more consistent use of the term ''contract action'' and to place definitions in the proper FAR sections.

This is not a significant regulatory action and, therefore, was not subject to review under section 6(b) of Executive Order 12866, Regulatory Planning and Review, dated September 30, 1993. This rule is not a major rule under 5 U.S.C. 804.

B. Regulatory Flexibility Act

The Department of Defense, the General Services Administration, and the National Aeronautics and Space Administration certify that this final rule will not have a significant economic impact on a substantial number of small entities within the meaning of the Regulatory Flexibility Act, 5 U.S.C. 601, *et seq.*, because we are not substantively changing procedures for award and administration of contracts. We did not receive any comments regarding this determination as a result of publication of the proposed rule in the **Federal Register** on May 31, 2000 (65 FR 34894).

C. Paperwork Reduction Act

The Paperwork Reduction Act does not apply because the changes to the FAR do not impose information collection requirements that require Office of Management and Budget approval under 44 U.S.C. 3501, *et seq.*

List of Subjects in 48 CFR Parts 1, 5, 6, 8, 17, 19, 32, and 52

Government procurement.

Dated: March 6, 2002.

Al Matera,

Director, Acquisition Policy Division.

Therefore, DoD, GSA, and NASA amend 48 CFR parts 1, 5, 6, 8, 17, 19, 32, and 52 as set forth below:

1. The authority citation for 48 CFR parts 1, 5, 6, 8, 17, 19, 32, and 52 continues to read as follows:

Authority: 40 U.S.C. 486(c); 10 U.S.C. chapter 137; and 42 U.S.C. 2473(c).

PART 1—FEDERAL ACQUISITION REGULATIONS SYSTEM

2. Revise section 1.403 to read as follows:

1.403 Individual deviations.

Individual deviations affect only one contract action, and, unless 1.405(e) is applicable, may be authorized by the agency head. The contracting officer must document the justification and agency approval in the contract file.

3. Revise the introductory paragraph of section 1.404 to read as follows:

1.404 Class deviations.

Class deviations affect more than one contract action. When an agency knows that it will require a class deviation on a permanent basis, it should propose a FAR revision, if appropriate. Civilian agencies, other than NASA, must furnish a copy of each approved class deviation to the FAR Secretariat.

* * * * *

1.701 [Amended]

4. Amend the first sentence of section 1.701 by removing the word ''contracting'' and adding ''contract'' in its place.

1.703 [Amended]

5. Amend section 1.703 in paragraph (a) by removing the word ''contracting'' each time it appears (3 times) and adding ''contract'' in its place.

6. Amend section 1.705 by revising paragraph (b) to read as follows:

1.705 Supersession and modification.

* * * * *

(b) The contracting officer need not cancel the solicitation if the D&F, as modified, supports the contract action.

PART 5—PUBLICIZING CONTRACT ACTIONS

7. Revise section 5.001 to read as follows:

5.001 Definition.

Contract action, as used in this part, means an action resulting in a contract, as defined in subpart 2.1, including actions for additional supplies or services outside the existing contract scope, but not including actions that are within the scope and under the terms of the existing contract, such as contract modifications issued pursuant to the Changes clause, or funding and other administrative changes.

PART 6—COMPETITION REQUIREMENTS

6.502 [Amended]

8. Amend section 6.502 in paragraph (b)(1)(iv) by removing the word ''contracting'' and adding ''contract'' in its place.

PART 8—REQUIRED SOURCES OF SUPPLIES AND SERVICES

9. Revise section 8.102 to read as follows:

8.102 Policy.

When practicable, agencies must use excess personal property as the first source of supply for agency and cost-reimbursement contractor requirements. Agency personnel must make positive efforts to satisfy agency requirements by obtaining and using excess personal property (including that suitable for adaptation or substitution) before initiating a contract action.

PART 17—SPECIAL CONTRACTING METHODS

17.104 [Amended]

10. Amend section 17.104 in the second sentence of paragraph (b) by removing the words ''contracting action'' and adding ''contract'' in their place.

11. Amend section 17.503 by revising the introductory text of paragraph (b) to read as follows:

17.503 Determinations and findings requirements.

* * * * *

(b) If the Economy Act order requires contract action by the servicing agency, the D&F must also include a statement that at least one of the following circumstances applies:

* * * * *

PART 19—SMALL BUSINESS PROGRAMS

19.302 [Amended]

12. Amend section 19.302 in the first sentence of paragraph (h)(4) by removing the words ''contracting action'' and adding ''contract action'' in their place.

13. Amend section 19.505 by revising paragraph (c) to read as follows:

19.505 Rejecting Small Business Administration recommendations.

* * * * *

(c) If the head of the contracting activity agrees that the contracting officer's rejection was appropriate—

(1) Within 1 working day, the SBA procurement center representative may request the contracting officer to suspend action on the acquisition until the SBA Administrator appeals to the agency head (see paragraph (f) of this section); and

(2) The SBA must be allowed 15 working days after making such a written request, within which the Administrator of SBA—

(i) May appeal to the Secretary of the Department concerned; and

(ii) Must notify the contracting officer whether the further appeal has, in fact, been taken. If notification is not received by the contracting officer within the 15-day period, it is deemed that the SBA request to suspend the contract action has been withdrawn and that an appeal to the Secretary was not taken.

* * * * *

PART 32—CONTRACT FINANCING

14. Revise the introductory paragraph of section 32.000 to read as follows:

32.000 Scope of part.

This part prescribes policies and procedures for contract financing and other payment matters. This part addresses—

* * * * *

15. Amend section 32.001 by revising the definition ''Contract action'' to read as follows:

32.001 Definitions.

* * * * *

Contract action means an action resulting in a contract, as defined in subpart 2.1, including actions for additional supplies or services outside the existing contract scope, but not including actions that are within the scope and under the terms of the existing contract, such as contract modifications issued pursuant to the Changes clause, or funding and other administrative changes.

* * * * *

32.703–2 [Amended]

16. Amend section 32.703–2 in the first sentence of the introductory text of paragraph (a) by removing the words ''contracting action'' and adding ''contract action'' in their place; by removing the semicolon after the word ''available'' and adding a comma in its place; and by removing the comma after the word ''provided''.

17. Amend section 32.705–1 by revising paragraph (a) to read as follows:

32.705–1 Clauses for contracting in advance of funds.

(a) Insert the clause at 52.232–18, Availability of Funds, in solicitations and contracts if the contract will be chargeable to funds of the new fiscal year and the contract action will be initiated before the funds are available.

* * * * *

PART 52—SOLICITATION PROVISIONS AND CONTRACT CLAUSES

18. Amend section 52.232–18 by revising the introductory text to read as follows:

52.232–18 Availability of Funds.

As prescribed in 32.705–1(a), insert the following clause:

* * * * *

[FR Doc. 02–5821 Filed 3–19–02; 8:45 am]

BILLING CODE 6820–EP–P

DEPARTMENT OF DEFENSE

GENERAL SERVICES ADMINISTRATION

NATIONAL AERONAUTICS AND SPACE ADMINISTRATION

48 CFR Parts 2, 3, 14, 15, 28, 35, and 52

[FAC 2001–06; FAR Case 2000–403; Item III]

RIN 9000–AI84

Federal Acquisition Regulation; Definitions for Sealed Bid and Negotiated Procurements

AGENCIES: Department of Defense (DoD), General Services Administration (GSA), and National Aeronautics and Space Administration (NASA).

ACTION: Final rule.

SUMMARY: The Civilian Agency Acquisition Council and the Defense Acquisition Regulations Council (Councils) have agreed to amend the Federal Acquisition Regulation (FAR) to provide consistent definitions for sealed bids and negotiated procurements.

DATES: *Effective Date:* April 4, 2002.

FOR FURTHER INFORMATION CONTACT: The FAR Secretariat, Room 4035, GS Building, Washington, DC 20405, (202) 501–4755, for information pertaining to status or publication schedules. For clarification of content, contact Mr. Ralph De Stefano, Procurement Analyst, at (202) 501–1758. Please cite FAC 2001–06, FAR case 2000–403.

SUPPLEMENTARY INFORMATION:

A. Background

The rule clarifies definitions that are used in the FAR for sealed bid and negotiated procurements. The rule—

- Moves the definitions of ''bid sample'' and ''descriptive literature'' from FAR part 14 to FAR 2.101 because the definitions apply to more than one FAR part;
- Amends those definitions and the definition of ''offer'' in accordance with plain language guidelines;
- Revises applicable provisions in FAR part 52 to conform with the new definitions;
- Adds a new definition for ''solicitation'' at FAR 2.101; and
- Provides definitions for ''bid'' and ''bidder'' in FAR part 28 because, as used in that part, the terms address sealed bid and negotiated acquisitions.

We also reviewed every instance where the terms ''offeror,'' ''prospective offeror,'' and ''potential offeror'' are used in the FAR. The rule clarifies

terminology used in FAR 15.201(f), 15.609(e), and 35.007(g). Where we mean an entity that is actively seeking a contract, we use the term ''prospective offeror.'' However, those cites describe processes that are set up to ensure competition. Therefore, any interested party is able to participate, including parties that the Government has not yet identified. Therefore, the rule uses the more general term ''potential offeror.''

DoD, GSA, and NASA published a proposed rule in the **Federal Register** at 65 FR 42852, July 11, 2000. Four respondents submitted comments on the proposed rule. The Councils considered all comments in the development of the final rule. A summary of the substantive comments is provided:

• *Comment:* Under 52.214–20, paragraph (c), change the second sentence to read ''The Government will reject the bid when the sample fails'' for clarity.

Response: Accepted.

• *Comment:* Under FAR 2.101, the definition of an ''offer'' does not include a ''quotation.'' The definition of a ''solicitation'' includes a ''quotation.'' Both definitions should be consistent.

Response: Not accepted. The definition of ''offer'' is not all-inclusive. It does not include ''quotations.'' A quotation is not an offer and, consequently, cannot be accepted by the Government to form a binding contract. See FAR 13.004.

• *Comment:* The proposed language under FAR 14.202–5(e) should cite FAR 14.202–4(f) in lieu of (g).

Response: Accepted.

This is not a significant regulatory action and, therefore, was not subject to review under section 6(b) of Executive Order 12866, Regulatory Planning and Review, dated September 30, 1993. This rule is not a major rule under 5 U.S.C. 804.

B. Regulatory Flexibility Act

The Department of Defense, the General Services Administration, and the National Aeronautics and Space Administration certify that this final rule will not have a significant economic impact on a substantial number of small entities within the meaning of the Regulatory Flexibility Act, 5 U.S.C. 601, *et seq.*, because, while we have made changes for clarity and consistency, we have not substantively changed procedures for award and administration of contracts.

C. Paperwork Reduction Act

The Paperwork Reduction Act does not apply because the changes to the FAR do not impose information collection requirements that require Office of Management and Budget approval under 44 U.S.C. 3501, *et seq.*

List of Subjects in 48 CFR Parts 2, 3, 14, 15, 28, 35, and 52

Government procurement.

Dated: March 6, 2002.

Al Matera,

Director, Acquisition Policy Division.

Therefore, DoD, GSA, and NASA amend 48 CFR Parts 2, 3, 14, 15, 28, 35, and 52 as set forth below:

1. The authority citation for 48 CFR Parts 2, 3, 14, 15, 28, 35, and 52 continues to read as follows:

Authority: 40 U.S.C. 486(c); 10 U.S.C. chapter 137; and 42 U.S.C. 2473(c).

PART 2—DEFINITIONS OF WORDS AND TERMS

2. Amend section 2.101 by adding, in alphabetical order, the definitions ''Bid sample'' and ''Descriptive literature''; revising the definition ''Offer''; and by adding the definition ''Solicitation'' to read as follows:

2.101 Definitions.

* * * * *

Bid sample means a product sample required to be submitted by an offeror to show characteristics of the offered products that cannot adequately be described by specifications, purchase descriptions, or the solicitation (*e.g.,* balance, facility of use, or pattern).

* * * * *

Descriptive literature means information provided by an offeror, such as cuts, illustrations, drawings, and brochures, that shows a product's characteristics or construction of a product or explains its operation. The term includes only that information needed to evaluate the acceptability of the product and excludes other information for operating or maintaining the product.

* * * * *

Offer means a response to a solicitation that, if accepted, would bind the offeror to perform the resultant contract. Responses to invitations for bids (sealed bidding) are offers called ''bids'' or ''sealed bids''; responses to requests for proposals (negotiation) are offers called ''proposals''; however, responses to requests for quotations (simplified acquisition) are ''quotations'', not offers. For unsolicited proposals, see subpart 15.6.

* * * * *

Solicitation means any request to submit offers or quotations to the Government. Solicitations under sealed bid procedures are called ''invitations for bids.'' *Solicitations* under negotiated procedures are called ''requests for proposals.'' Solicitations under simplified acquisition procedures may require submission of either a quotation or an offer.

* * * * *

PART 3—IMPROPER BUSINESS PRACTICES AND PERSONAL CONFLICTS OF INTEREST

3. Amend section 3.302 by revising the definition ''Line item'' to read as follows:

3.302 Definitions.

* * * * *

Line item means an item of supply or service, specified in a solicitation, that the offeror must separately price.

PART 14—SEALED BIDDING

4. Amend section 14.201–6 by—

a. Revising paragraph (a);

b. Removing paragraphs (b)(1) and (b)(2) and redesignating paragraphs (b)(3) and (b)(4) as (b)(1) and (b)(2);

c. Revising the introductory text of paragraph (o)(2) and paragraph (o)(3); and

d. Removing from paragraph (p)(3) ''14.202–5(e)(2)'' and adding ''14.202–5(d)(2)'' in its place. The revised text reads as follows:

14.201–6 Solicitation provisions.

(a) The provisions prescribed in this subsection apply to preparation and submission of bids in general. See other FAR parts for provisions and clauses related to specific acquisition requirements.

* * * * *

(o)(1) * * *

(2) If it appears that the conditions in 14.202–4(e)(1) will apply and the contracting officer anticipates granting waivers and—

* * * * *

(3) See 14.202–4(e)(2) regarding waiving the requirement for all bidders.

* * * * *

14.202–4 [Amended]

5. Amend section 14.202–4 by removing paragraph (a); redesignating paragraphs (b) through (h) as (a) through (g), respectively; and by removing the word ''of'' from the heading of newly designated paragraph (g).

6. Revise section 14.202–5 to read as follows:

14.202–5 Descriptive literature.

(a) *Policy.* Contracting officers must not require bidders to furnish descriptive literature unless it is needed before award to determine whether the

products offered meet the specification and to establish exactly what the bidder proposes to furnish.

(b) *Justification.* The contracting officer must document in the contract file the reasons why product acceptability cannot be determined without the submission of descriptive literature, except when the contract specifications require submission.

(c) *Requirements of invitation for bids.* (1) The invitation must clearly state—

(i) What descriptive literature the bidders must furnish;

(ii) The purpose for requiring the literature;

(iii) The extent of its consideration in the evaluation of bids; and

(iv) The rules that will apply if a bidder fails to furnish the literature before bid opening or if the literature provided does not comply with the requirements of the invitation.

(2) If bidders must furnish descriptive literature, see 14.201–6(p).

(d) *Waiver of requirement for descriptive literature.* (1) The contracting officer may waive the requirement for descriptive literature if—

(i) The bidder states in the bid that the product being offered is the same as a product previously or currently being furnished to the contracting activity; and

(ii) The contracting officer determines that the product offered by the bidder complies with the specification requirements of the current invitation for bids. When the contracting officer waives the requirement, see 14.201–6(p)(2).

(2) When descriptive literature is not necessary and a waiver of literature requirements of a specification has been authorized, the contracting officer must include a statement in the invitation that, despite the requirements of the specifications, descriptive literature will not be required.

(3) If the solicitation provides for a waiver, a bidder may submit a bid on the basis of either the descriptive literature furnished with the bid or a previously furnished product. If the bid is submitted on one basis, the bidder may not have it considered on the other basis after bids are opened.

(e) *Unsolicited descriptive literature.* If descriptive literature is furnished when it is not required by the invitation for bids, the procedures set forth in 14.202–4(f) must be followed.

14.404–4 [Amended]

7. Amend section 14.404–4 in the first sentence by removing ''14.202–5(a)'' and adding ''2.101'' in its place; and in the last sentence by removing ''14.202–5(f)'' and adding ''14.202–5(e)'' in its place.

PART 15—CONTRACTING BY NEGOTIATION

8. Amend section 15.201 by removing the undesignated paragraph at the end of the section and revising paragraph (f) to read as follows:

15.201 Exchanges with industry before receipt of proposals.

* * * * *

(f) General information about agency mission needs and future requirements may be disclosed at any time. After release of the solicitation, the contracting officer must be the focal point of any exchange with potential offerors. When specific information about a proposed acquisition that would be necessary for the preparation of proposals is disclosed to one or more potential offerors, that information must be made available to the public as soon as practicable, but no later than the next general release of information, in order to avoid creating an unfair competitive advantage. Information provided to a potential offeror in response to its request must not be disclosed if doing so would reveal the potential offeror's confidential business strategy, and is protected under 3.104 or subpart 24.2. When conducting a presolicitation or preproposal conference, materials distributed at the conference should be made available to all potential offerors, upon request.

9. Amend section 15.609 by revising paragraph (e) to read as follows:

15.609 Limited use of data.

* * * * *

(e) Use the notice in paragraph (d) of this section solely as a manner of handling unsolicited proposals that will be compatible with this subpart. However, do not use this notice to justify withholding of a record, or to improperly deny the public access to a record, where an obligation is imposed by the Freedom of Information Act (5 U.S.C. 552). An offeror should identify trade secrets, commercial or financial information, and privileged or confidential information to the Government (see paragraph (a) of this section).

* * * * *

PART 28—BONDS AND INSURANCE

10. Revise section 28.000 to read as follows:

28.000 Scope of part.

This part prescribes requirements for obtaining financial protection against losses under contracts that result from the use of the sealed bid or negotiated methods. It covers bid guarantees, bonds, alternative payment protections, security for bonds, and insurance.

11. Amend section 28.001 by adding, in alphabetical order, the definitions ''Bid'' and ''Bidder'' to read as follows:

28.001 Definitions.

* * * * *

Bid means any response to a solicitation, including a proposal under a negotiated acquisition. See the definition of ''offer'' at 2.101.

* * * * *

Bidder means any entity that is responding or has responded to a solicitation, including an offeror under a negotiated acquisition.

* * * * *

PART 35—RESEARCH AND DEVELOPMENT CONTRACTING

12. Amend section 35.007 by revising paragraph (g) to read as follows:

35.007 Solicitations.

* * * * *

(g) The contracting officer should ensure that potential offerors fully understand the details of the work, especially the Government interpretation of the work statement. If the effort is complex, the contracting officer should provide potential offerors an opportunity to comment on the details of the requirements as contained in the work statement, the contract Schedule, and any related specifications. This may be done at a preproposal conference (see 15.201).

* * * * *

PART 52—SOLICITATION PROVISIONS AND CONTRACT CLAUSES

52.214–1 [Reserved]

13. Remove and reserve section 52.214–1.

52.214–3 [Amended]

14. Amend section 52.214–3 in the prescription by removing ''14.201–6(b)(3)'' and adding ''14.201–6(b)(1)'' in its place.

52.214–4 [Amended]

15. Amend section 52.214–4 in the prescription by removing ''14.201–6(b)(4)'' and adding ''14.201–6(b)(2)'' in its place.

16. Amend section 52.214–20 by revising the introductory paragraph, date of the provision, and paragraphs

(a), (b), and the introductory text of paragraph (c); and by removing from Alternates I and II ''14.202–4(f)(1)'' and adding ''14.202–4(e)(1)'' in its place. The revised text reads as follows:

52.214–20 Bid Samples.

As prescribed in 14.201–6(o)(1), insert the following provision:

Bid Samples (Apr 2002)

(a) *Bid sample* means a product sample required to be submitted by a bidder to show those characteristics of the offered products that cannot adequately be described by specifications, purchase descriptions, or the invitation for bid (*e.g.,* balance, facility of use, or pattern).

(b) Bidders must furnish bid samples as part of the bid. The Government must receive the bid samples by the time specified in the invitation for bids. If the bidder fails to submit samples on time, the Government will reject the bid, except that the Contracting Officer will consider a late sample sent by mail under the Late Submissions, Modifications, and Withdrawals of Bids provision of this solicitation.

(c) The Government will test or evaluate bid samples to determine compliance with all the characteristics listed for examination in this solicitation. The Government will reject the bid when the sample fails to conform to the required characteristics. Products delivered under any resulting contract must conform to—

* * * * *

(End of provision)

* * * * *

17. Revise section 52.214–21 to read as follows:

52.214–21 Descriptive Literature.

As prescribed in 14.201–6(p)(1), insert the following provision:

Descriptive Literature (Apr 2002)

(a) *Descriptive literature,* as used in this provision, means information furnished by a bidder, such as cuts, illustrations, drawings, and brochures, that shows a product's characteristics or construction or explains its operation. The term includes only that information required to evaluate the acceptability of the product and excludes other information for operating or maintaining the product.

(b) Descriptive literature is required to establish, for the purpose of evaluation and award, details of the product offered that are specified elsewhere in the solicitation and pertain to significant elements such as—

(1) Design;

(2) Materials;

(3) Components;

(4) Performance characteristics; and

(5) Methods of manufacture, assembly, construction, or operation.

(c) Descriptive literature, required elsewhere in this solicitation, shall be—

(1) Identified to show the item(s) of the offer to which it applies; and

(2) Received by the time specified in this solicitation.

(d) If the bidder fails to submit descriptive literature on time, the Government will reject the bid, except that late descriptive literature sent by mail may be considered under the Late Submissions, Modifications, and Withdrawals of Bids provision of this solicitation.

(e) If the descriptive literature fails to show that the product offered conforms to the requirements of the solicitation, the Government will reject the bid.

(End of provision)

Alternate I (Apr 2002). As prescribed in 14.201–6(p)(2), add the following paragraphs (f) and (g) to the basic provision:

(f) The Contracting Officer may waive the requirement for furnishing descriptive literature if the offeror has supplied a product that is the same as that required by this solicitation under a prior contract. A bidder that requests a waiver of this requirement shall provide the following information:

Prior contract number _____

Date of prior contract _____

Contract line item number of product supplied _____

Name and address of Government activity to which delivery was made _____

Date of final delivery product supplied _____

(g) Bidders shall submit bids on the basis of required descriptive literature or on the basis of a previously supplied product under paragraph (f) of this provision. A bidder submitting a bid on one of these two bases may not elect to have its bid considered on the alternative basis after the time specified for receipt of bids. The Government will disregard a bidder's request for a waiver under paragraph (f) if that bidder has submitted the descriptive literature requested under this solicitation.

[FR Doc. 02–5822 Filed 3–19–02; 8:45 am]

BILLING CODE 6820–EP–P

DEPARTMENT OF DEFENSE

GENERAL SERVICES ADMINISTRATION

NATIONAL AERONAUTICS AND SPACE ADMINISTRATION

48 CFR Parts 2, 3, 4, 9, 15, and 52

[FAC 2001–06; FAR Case 1998–024; Item IV]

RIN 9000–AI61

Federal Acquisition Regulation; Procurement Integrity Rewrite

AGENCIES: Department of Defense (DoD), General Services Administration (GSA), and National Aeronautics and Space Administration (NASA).

ACTION: Final rule.

SUMMARY: The Civilian Agency Acquisition Council and the Defense Acquisition Regulations Council (Councils) have agreed on a final rule amending the Federal Acquisition Regulation (FAR) to rewrite procurement integrity coverage in plain language.

DATES: *Effective Date*: April 4, 2002.

FOR FURTHER INFORMATION CONTACT: The FAR Secretariat, Room 4035, GS Building, Washington, DC 20405, (202) 501–4755, for information pertaining to status or publication schedules. For clarification of content, contact Mr. Ralph De Stefano, Procurement Analyst, at (202) 501–1758. Please cite FAC 2001–06, FAR case 1998–024.

SUPPLEMENTARY INFORMATION:

A. Background

Section 27 of the Office of Federal Procurement Policy Act (41 U.S.C. 423) is more commonly referred to as the Procurement Integrity Act (hereinafter referred to as the Act). FAR 3.104 implements prohibitions, restrictions, and other requirements of the Act that are placed on certain agency officials that participate in Federal agency procurements.

Other statutes and regulations also govern the conduct of Government employees. In particular, the Office of Government Ethics regulations provide interpretive guidance on the prohibitions in 18 U.S.C. 207 and 208 that also apply to Government employees that participate in procurement activities during the conduct of a Federal agency procurement. While FAR 3.104 does not implement these other statutes and regulations, it is very important for agency employees to be aware, not only of the prohibitions and restrictions in the Act, but also those contained in other statutes and regulations that deal with the same or related prohibited conduct. Criminal and administrative penalties can result if an employee violates the restrictions or otherwise engages in prohibited conduct.

It became apparent that we could improve FAR 3.104 by reorganizing and simplifying the text. Moreover, we clarify 3.104 to alert agency officials that even if their participation does not meet the definition in FAR 3.104 of participating personally and substantially, they are precluded from participating in a Federal agency procurement if they engage in certain conduct otherwise prohibited by other statutes and regulations. We added this guidance in FAR 3.104–2(b), 3.104–3(c), and 3.104–5(a) to alert these agency officials that they should seek advice from agency ethics officials before engaging in certain activities that could have serious consequences, including

criminal prosecution. These revisions to FAR 3.104 do not change either the requirements of the Act or change, in any manner, who is covered by, or the activities covered in, Office of Government Ethics regulations interpreting conflict of interest statutes.

To avoid possible violations of 18 U.S.C. 208, agency employees need to be aware that while their participation in a Federal agency procurement may not be considered ''participating personally and substantially in a Federal agency procurement'' for purposes of certain requirements in the Act, nevertheless, there will be instances where the employee will be considered to be participating personally and substantially for purposes of 18 U.S.C. 208. We have added these revisions to FAR 3.104 to alert agency officials that, while participating in a Federal agency procurement, they must be aware of and comply with the applicable disqualification requirements of 5 CFR 2635.604 and 2635.606.

These revisions also may assist agency ethics officials in advising agency officials participating in a Federal agency procurement. Certain conduct by an agency official during the conduct of a Federal agency procurement requires the official's disqualification from participation irrespective of whether or not the official's participation meets the definition of participating personally and substantially for purposes of the Act.

A proposed rule was published in the **Federal Register** at 65 FR 16758, March 29, 2000. Seven sources submitted comments in response to the proposed rule. All comments were considered in the development of the final rule. A summary of the substantive comments is provided.

• *Comment:* Additional clarification should be added that merely signing appointment letters for source selection evaluation panels, boards is not ''participating personally and substantially participation in a Federal agency procurement.''

Response: Not accepted. The definition of ''participating personally and substantially in a Federal agency procurement'' is already quite detailed and more clarification is unnecessary.

• *Comment:* The standards identified in FAR 3.104–3(d) concerning prohibition on a former official's acceptance of compensation from a contractor that has been awarded a competitive or sole source contract, as an employee, officer, director, or consultant of the contractor should be made more restrictive.

Response: Not accepted. The regulatory coverage tracks the statutory language.

• *Comment:* A definition of ''must'' should be added.

Response: The definition of ''must'' was added to FAR 2.101 under another final rule and is currently in the FAR.

• *Comment:* Does the definition of ''source selection information'' include quotations in FAR Subpart 13.5, Test Program for Certain Commercial Items, that are over the simplified acquisition threshold, normally over $100,000.

Response: No. Bids and proposals are addressed in the Act. Bids and proposals are terms of art to distinguish methods of contracting (bids under sealed bidding and proposals under negotiation). A quotation is not a bid or a proposal.

• *Comment:* The references to ''procurement'' in the rule should be changed to read ''acquisition.''

Response: Not accepted. The Act and its implementation in FAR 3.104 apply only to a ''Federal agency procurement.'' The term ''Federal agency procurement'' is defined in both the Act and FAR 3.104. The definition is different from the definition of ''acquisition'' in FAR 2.101.

• *Comment:* Head of the contracting activity delegation restrictions in FAR 3.104–7(g) should be relaxed.

Response: Not accepted. The issues being addressed are very significant, *i.e.,* violations or possible violations of the Act; therefore, relaxation of the restriction is not appropriate.

• *Comment:* Informing acquisition employees that some post-employment restrictions are not tied to ''personal and substantial participation'' should be added in the rule.

Response: Accepted. See discussion under Supplementary Information, Background, above.

• *Comment:* Suggest retaining current FAR definition at FAR 3.104–1, ''Participating personally and substantially in a Federal agency procurement,'' as applied to the OMB Circular A–76, paragraph (4). The proposed rule contains an expanded definition.

Response: Accepted. The 1996 amendments to the Act limit the application of the post-employment restrictions to designated positions; therefore, the participation of most personnel in these activities would not place them at risk of losing any right of first refusal. See paragraph (4)(iv) of FAR 3.104–1, ''Participating substantially''.

• *Comment:* Clarify what constitutes a ''contact'' under the Act. Response: An explanation of ''contact'' was added to the rule at FAR 3.104–3(c)(2). The addition gives the suggested guidance.

• *Comment:* A clarification that employment contacts through agents are subject to disqualification needs to be added at FAR 3.104–5(a).

Response: Accepted. The added language makes a clear statement that an employment contact through agents is subject to disqualification under this final rule.

• *Comment:* The number of individuals required to receive the disqualification notice directly from the agency official disqualifying herself/himself should be reduced.

Response: Partially accepted. The requirement for a notice of disqualification to the head of the contracting activity was deleted, but the requirements for notice to the contracting officer, source selection official, and immediate supervisor were retained. In an attempt to reduce the number of officials required to be notified, it was determined that the head of the contracting activity could be deleted. The Act places an affirmative responsibility on the agency official to disqualify herself/himself.

• *Comment:* Clarify that satisfying the requirement of 18 U.S.C 208 does not automatically authorize the disqualified official to resume participation in the procurement.

Response: The wording of the first sentence of 3.104–5(c) was revised to clarify that the conditions for resumption of participation in 3.104–3(c)(1)(ii) are statutorily mandated and that reinstatement is not necessarily automatic after those conditions have been met.

This is not a significant regulatory action, and therefore, was not subject to review under Section 6(b) of Executive Order 12866, Regulatory Planning and Review, dated September 30, 1993. This rule is not a major rule under 5 U.S.C. 804.

B. Regulatory Flexibility Act

The Department of Defense, the General Services Administration, and the National Aeronautics and Space Administration certify that this final rule will not have a significant economic impact on a substantial number of small entities within the meaning of the Regulatory Flexibility Act, 5 U.S.C. 601, *et seq.*, because the clarification only applies to individuals that are Government officials.

C. Paperwork Reduction Act

The Paperwork Reduction Act does not apply because the changes to the FAR do not impose information collection requirements that require the

approval of the Office of Management and Budget under 44 U.S.C. 3501, *et seq.*

List of Subjects in 48 CFR Parts 2, 3, 4, 9, 15, and 52

Government procurement.

Dated: March 6, 2002.

Al Matera,

Director, Acquisition Policy Division.

Therefore, DoD, GSA, and NASA amend 48 CFR parts 2, 3, 4, 9, 15, and 52 as set forth below:

1. The authority citation for 48 CFR parts 2, 3, 4, 9, 15, and 52 continues to read as follows:

Authority: 40 U.S.C. 486(c); 10 U.S.C. chapter 137; and 42 U.S.C. 2473(c).

PART 2—DEFINITIONS OF WORDS AND TERMS

2. Amend section 2.101 by adding, in alphabetical order, the definitions ''Offeror'' and ''Source selection information'' to read as follows:

2.101 Definitions.

* * * * *

Offeror means offeror or bidder.

* * * * *

Source selection information means any of the following information that is prepared for use by an agency for the purpose of evaluating a bid or proposal to enter into an agency procurement contract, if that information has not been previously made available to the public or disclosed publicly:

(1) Bid prices submitted in response to an agency invitation for bids, or lists of those bid prices before bid opening.

(2) Proposed costs or prices submitted in response to an agency solicitation, or lists of those proposed costs or prices.

(3) Source selection plans.

(4) Technical evaluation plans.

(5) Technical evaluations of proposals.

(6) Cost or price evaluations of proposals.

(7) Competitive range determinations that identify proposals that have a reasonable chance of being selected for award of a contract.

(8) Rankings of bids, proposals, or competitors.

(9) Reports and evaluations of source selection panels, boards, or advisory councils.

(10) Other information marked as ''Source Selection Information—See FAR 2.101 and 3.104'' based on a case-by-case determination by the head of the agency or the contracting officer, that its disclosure would jeopardize the integrity or successful completion of the Federal agency procurement to which the information relates.

* * * * *

PART 3—IMPROPER BUSINESS PRACTICES AND PERSONAL CONFLICTS OF INTEREST

3. Remove sections 3.104–10 and 3.104–11 and revise sections 3.104 through 3.104–9 to read as follows:

3.104 Procurement integrity.

3.104–1 Definitions.

As used in this section—

Agency ethics official means the designated agency ethics official described in 5 CFR 2638.201 or other designated person, including—

(1) Deputy ethics officials described in 5 CFR 2638.204, to whom authority under 3.104–6 has been delegated by the designated agency ethics official; and

(2) Alternate designated agency ethics officials described in 5 CFR 2638.202(b).

Compensation means wages, salaries, honoraria, commissions, professional fees, and any other form of compensation, provided directly or indirectly for services rendered. Compensation is indirectly provided if it is paid to an entity other than the individual, specifically in exchange for services provided by the individual.

Contractor bid or proposal information means any of the following information submitted to a Federal agency as part of or in connection with a bid or proposal to enter into a Federal agency procurement contract, if that information has not been previously made available to the public or disclosed publicly:

(1) Cost or pricing data (as defined by 10 U.S.C. 2306a(h)) with respect to procurements subject to that section, and section 304A(h) of the Federal Property and Administrative Services Act of 1949 (41 U.S.C. 254b(h)), with respect to procurements subject to that section.

(2) Indirect costs and direct labor rates.

(3) Proprietary information about manufacturing processes, operations, or techniques marked by the contractor in accordance with applicable law or regulation.

(4) Information marked by the contractor as ''contractor bid or proposal information'' in accordance with applicable law or regulation.

(5) Information marked in accordance with 52.215–1(e).

Decision to award a subcontract or modification of subcontract means a decision to designate award to a particular source.

Federal agency procurement means the acquisition (by using competitive procedures and awarding a contract) of goods or services (including construction) from non-Federal sources by a Federal agency using appropriated funds. For broad agency announcements and small business innovative research programs, each proposal received by an agency constitutes a separate procurement for purposes of the Act.

In excess of $10,000,000 means—

(1) The value, or estimated value, at the time of award, of the contract, including all options;

(2) The total estimated value at the time of award of all orders under an indefinite-delivery, indefinite-quantity, or requirements contract;

(3) Any multiple award schedule contract, unless the contracting officer documents a lower estimate;

(4) The value of a delivery order, task order, or an order under a Basic Ordering Agreement;

(5) The amount paid or to be paid in settlement of a claim; or

(6) The estimated monetary value of negotiated overhead or other rates when applied to the Government portion of the applicable allocation base.

Official means—

(1) An officer, as defined in 5 U.S.C. 2104;

(2) An employee, as defined in 5 U.S.C. 2105;

(3) A member of the uniformed services, as defined in 5 U.S.C. 2101(3); or

(4) A special Government employee, as defined in 18 U.S.C. 202.

Participating personally and substantially in a Federal agency procurement means—

(1) Active and significant involvement of an official in any of the following activities directly related to that procurement:

(i) Drafting, reviewing, or approving the specification or statement of work for the procurement.

(ii) Preparing or developing the solicitation.

(iii) Evaluating bids or proposals, or selecting a source.

(iv) Negotiating price or terms and conditions of the contract.

(v) Reviewing and approving the award of the contract.

(2) *Participating personally* means participating directly, and includes the direct and active supervision of a subordinate's participation in the matter.

(3) *Participating substantially* means that the official's involvement is of significance to the matter. Substantial participation requires more than official responsibility, knowledge, perfunctory

involvement, or involvement on an administrative or peripheral issue. Participation may be substantial even though it is not determinative of the outcome of a particular matter. A finding of substantiality should be based not only on the effort devoted to a matter, but on the importance of the effort. While a series of peripheral involvements may be insubstantial, the single act of approving or participating in a critical step may be substantial. However, the review of procurement documents solely to determine compliance with regulatory, administrative, or budgetary procedures, does not constitute substantial participation in a procurement.

(4) Generally, an official will not be considered to have participated personally and substantially in a procurement solely by participating in the following activities:

(i) Agency-level boards, panels, or other advisory committees that review program milestones or evaluate and make recommendations regarding alternative technologies or approaches for satisfying broad agency-level missions or objectives.

(ii) The performance of general, technical, engineering, or scientific effort having broad application not directly associated with a particular procurement, notwithstanding that such general, technical, engineering, or scientific effort subsequently may be incorporated into a particular procurement.

(iii) Clerical functions supporting the conduct of a particular procurement.

(iv) For procurements to be conducted under the procedures of OMB Circular A–76, participation in management studies, preparation of in-house cost estimates, preparation of ''most efficient organization'' analyses, and furnishing of data or technical support to be used by others in the development of performance standards, statements of work, or specifications.

Source selection evaluation board means any board, team, council, or other group that evaluates bids or proposals.

3.104–2 General.

(a) This section implements section 27 of the Office of Federal Procurement Policy Act (the Procurement Integrity Act) (41 U.S.C. 423) referred to as ''the Act''). Agency supplementation of 3.104, including specific definitions to identify individuals who occupy positions specified in 3.104–3(d)(1)(ii), and any clauses required by 3.104 must be approved by the senior procurement executive of the agency, unless a law establishes a higher level of approval for that agency.

(b) Agency officials are reminded that there are other statutes and regulations that deal with the same or related prohibited conduct, for example—

(1) The offer or acceptance of a bribe or gratuity is prohibited by 18 U.S.C. 201 and 10 U.S.C. 2207. The acceptance of a gift, under certain circumstances, is prohibited by 5 U.S.C. 7353 and 5 CFR part 2635;

(2) Contacts with an offeror during the conduct of an acquisition may constitute ''seeking employment,''(see subpart F of 5 CFR part 2636 and 3.104–3(c)(2)). Government officers and employees (employees) are prohibited by 18 U.S.C. 208 and 5 CFR part 2635 from participating personally and substantially in any particular matter that would affect the financial interests of any person with whom the employee is seeking employment. An employee who engages in negotiations or is otherwise seeking employment with an offeror or who has an arrangement concerning future employment with an offeror must comply with the applicable disqualification requirements of 5 CFR 2635.604 and 2635.606. The statutory prohibition in 18 U.S.C. 208 also may require an employee's disqualification from participation in the acquisition even if the employee's duties may not be considered ''participating personally and substantially,'' as this term is defined in 3.104–1;

(3) Post-employment restrictions are covered by 18 U.S.C. 207 and 5 CFR parts 2637 and 2641, that prohibit certain activities by former Government employees, including representation of a contractor before the Government in relation to any contract or other particular matter involving specific parties on which the former employee participated personally and substantially while employed by the Government. Additional restrictions apply to certain senior Government employees and for particular matters under an employee's official responsibility;

(4) Parts 14 and 15 place restrictions on the release of information related to procurements and other contractor information that must be protected under 18 U.S.C. 1905;

(5) Release of information both before and after award (see 3.104–4) may be prohibited by the Privacy Act (5 U.S.C. 552a), the Trade Secrets Act (18 U.S.C. 1905), and other laws; and

(6) Using nonpublic information to further an employee's private interest or that of another and engaging in a financial transaction using nonpublic information are prohibited by 5 CFR 2635.703.

3.104–3 Statutory and related prohibitions, restrictions, and requirements.

(a) *Prohibition on disclosing procurement information (subsection 27(a) of the Act).* (1) A person described in paragraph (a)(2) of this subsection must not, other than as provided by law, knowingly disclose contractor bid or proposal information or source selection information before the award of a Federal agency procurement contract to which the information relates. (See 3.104–4(a).)

(2) Paragraph (a)(1) of this subsection applies to any person who—

(i) Is a present or former official of the United States, or a person who is acting or has acted for or on behalf of, or who is advising or has advised the United States with respect to, a Federal agency procurement; and

(ii) By virtue of that office, employment, or relationship, has or had access to contractor bid or proposal information or source selection information.

(b) *Prohibition on obtaining procurement information (subsection 27(b) of the Act).* A person must not, other than as provided by law, knowingly obtain contractor bid or proposal information or source selection information before the award of a Federal agency procurement contract to which the information relates.

(c) *Actions required when an agency official contacts or is contacted by an offeror regarding non-Federal employment (subsection 27(c) of the Act).* (1) If an agency official, participating personally and substantially in a Federal agency procurement for a contract in excess of the simplified acquisition threshold, contacts or is contacted by a person who is an offeror in that Federal agency procurement regarding possible non-Federal employment for that official, the official must—

(i) Promptly report the contact in writing to the official's supervisor and to the agency ethics official; and

(ii) Either reject the possibility of non-Federal employment or disqualify himself or herself from further personal and substantial participation in that Federal agency procurement (see 3.104–5) until such time as the agency authorizes the official to resume participation in that procurement, in accordance with the requirements of 18 U.S.C. 208 and applicable agency regulations, because—

(A) The person is no longer an offeror in that Federal agency procurement; or

(B) All discussions with the offeror regarding possible non-Federal employment have terminated without an agreement or arrangement for employment.

(2) A contact is any of the actions included as ''seeking employment'' in 5 CFR 2635.603(b). In addition, unsolicited communications from offerors regarding possible employment are considered contacts.

(3) Agencies must retain reports of employment contacts for 2 years from the date the report was submitted.

(4) Conduct that complies with subsection 27(c) of the Act may be prohibited by other criminal statutes and the Standards of Ethical Conduct for Employees of the Executive Branch. See 3.104–2(b)(2).

(d) *Prohibition on former official's acceptance of compensation from a contractor (subsection 27(d) of the Act).* (1) A former official of a Federal agency may not accept compensation from a contractor that has been awarded a competitive or sole source contract, as an employee, officer, director, or consultant of the contractor within a period of 1 year after such former official—

(i) Served, at the time of selection of the contractor or the award of a contract to that contractor, as the procuring contracting officer, the source selection authority, a member of a source selection evaluation board, or the chief of a financial or technical evaluation team in a procurement in which that contractor was selected for award of a contract in excess of $10,000,000;

(ii) Served as the program manager, deputy program manager, or administrative contracting officer for a contract in excess of $10,000,000 awarded to that contractor; or

(iii) Personally made for the Federal agency a decision to—

(A) Award a contract, subcontract, modification of a contract or subcontract, or a task order or delivery order in excess of $10,000,000 to that contractor;

(B) Establish overhead or other rates applicable to a contract or contracts for that contractor that are valued in excess of $10,000,000;

(C) Approve issuance of a contract payment or payments in excess of $10,000,000 to that contractor; or

(D) Pay or settle a claim in excess of $10,000,000 with that contractor.

(2) The 1-year prohibition begins on the date—

(i) Of contract award for positions described in paragraph (d)(1)(i) of this subsection, or the date of contractor selection if the official was not serving in the position on the date of award;

(ii) The official last served in one of the positions described in paragraph (d)(1)(ii) of this subsection; or

(iii) The official made one of the decisions described in paragraph (d)(1)(iii) of this subsection.

(3) Nothing in paragraph (d)(1) of this subsection may be construed to prohibit a former official of a Federal agency from accepting compensation from any division or affiliate of a contractor that does not produce the same or similar products or services as the entity of the contractor that is responsible for the contract referred to in paragraph (d)(1) of this subsection.

3.104–4 Disclosure, protection, and marking of contractor bid or proposal information and source selection information.

(a) Except as specifically provided for in this subsection, no person or other entity may disclose contractor bid or proposal information or source selection information to any person other than a person authorized, in accordance with applicable agency regulations or procedures, by the agency head or the contracting officer to receive such information.

(b) Contractor bid or proposal information and source selection information must be protected from unauthorized disclosure in accordance with 14.401, 15.207, applicable law, and agency regulations.

(c) Individuals unsure if particular information is source selection information, as defined in 2.101, should consult with agency officials as necessary. Individuals responsible for preparing material that may be source selection information as described at paragraph (10) of the ''source selection information'' definition in 2.101 must mark the cover page and each page that the individual believes contains source selection information with the legend ''Source Selection Information—See FAR 2.101 and 3.104.'' Although the information in paragraphs (1) through (9) of the definition in 2.101 is considered to be source selection information whether or not marked, all reasonable efforts must be made to mark such material with the same legend.

(d) Except as provided in paragraph (d)(3) of this subsection, the contracting officer must notify the contractor in writing if the contracting officer believes that proprietary information, contractor bid or proposal information, or information marked in accordance with 52.215–1(e) has been inappropriately marked. The contractor that has affixed the marking must be given an opportunity to justify the marking.

(1) If the contractor agrees that the marking is not justified, or does not respond within the time specified in the notice, the contracting officer may remove the marking and release the information.

(2) If, after reviewing the contractor's justification, the contracting officer determines that the marking is not justified, the contracting officer must notify the contractor in writing before releasing the information.

(3) For technical data marked as proprietary by a contractor, the contracting officer must follow the procedures in 27.404(h).

(e) This section does not restrict or prohibit—

(1) A contractor from disclosing its own bid or proposal information or the recipient from receiving that information;

(2) The disclosure or receipt of information, not otherwise protected, relating to a Federal agency procurement after it has been canceled by the Federal agency, before contract award, unless the Federal agency plans to resume the procurement;

(3) Individual meetings between a Federal agency official and an offeror or potential offeror for, or a recipient of, a contract or subcontract under a Federal agency procurement, provided that unauthorized disclosure or receipt of contractor bid or proposal information or source selection information does not occur; or

(4) The Government's use of technical data in a manner consistent with the Government's rights in the data.

(f) This section does not authorize—

(1) The withholding of any information pursuant to a proper request from the Congress, any committee or subcommittee thereof, a Federal agency, the Comptroller General, or an Inspector General of a Federal agency, except as otherwise authorized by law or regulation. Any release containing contractor bid or proposal information or source selection information must clearly identify the information as contractor bid or proposal information or source selection information related to the conduct of a Federal agency procurement and notify the recipient that the disclosure of the information is restricted by section 27 of the Act;

(2) The withholding of information from, or restricting its receipt by, the Comptroller General in the course of a protest against the award or proposed award of a Federal agency procurement contract;

(3) The release of information after award of a contract or cancellation of a procurement if such information is

contractor bid or proposal information or source selection information that pertains to another procurement; or

(4) The disclosure, solicitation, or receipt of bid or proposal information or source selection information after award if disclosure, solicitation, or receipt is prohibited by law. (See 3.104–2(b)(5) and subpart 24.2.)

3.104–5 Disqualification.

(a) *Contacts through agents or other intermediaries.* Employment contacts between the employee and the offeror, that are conducted through agents, or other intermediaries, may require disqualification under 3.104–3(c)(1). These contacts may also require disqualification under other statutes and regulations. (See 3.104–2(b)(2).)

(b) *Disqualification notice.* In addition to submitting the contact report required by 3.104–3(c)(1), an agency official who must disqualify himself or herself pursuant to 3.104–3(c)(1)(ii) must promptly submit written notice of disqualification from further participation in the procurement to the contracting officer, the source selection authority if other than the contracting officer, and the agency official's immediate supervisor. As a minimum, the notice must—

(1) Identify the procurement;

(2) Describe the nature of the agency official's participation in the procurement and specify the approximate dates or time period of participation; and

(3) Identify the offeror and describe its interest in the procurement.

(c) *Resumption of participation in a procurement.* (1) The official must remain disqualified until such time as the agency, at its sole and exclusive discretion, authorizes the official to resume participation in the procurement in accordance with 3.104–3(c)(1)(ii).

(2) After the conditions of 3.104–3(c)(1)(ii)(A) or (B) have been met, the head of the contracting activity (HCA), after consultation with the agency ethics official, may authorize the disqualified official to resume participation in the procurement, or may determine that an additional disqualification period is necessary to protect the integrity of the procurement process. In determining the disqualification period, the HCA must consider any factors that create an appearance that the disqualified official acted without complete impartiality in the procurement. The HCA's reinstatement decision should be in writing.

(3) Government officer or employee must also comply with the provisions of 18 U.S.C. 208 and 5 CFR part 2635 regarding any resumed participation in a procurement matter. Government officer or employee may not be reinstated to participate in a procurement matter affecting the financial interest of someone with whom the individual is seeking employment, unless the individual receives—

(i) A waiver pursuant to 18 U.S.C. 208(b)(1) or (b)(3); or

(ii) An authorization in accordance with the requirements of subpart F of 5 CFR part 2635.

3.104–6 Ethics advisory opinions regarding prohibitions on a former official's acceptance of compensation from a contractor.

(a) An official or former official of a Federal agency who does not know whether he or she is or would be precluded by subsection 27(d) of the Act (see 3.104–3(d)) from accepting compensation from a particular contractor may request advice from the appropriate agency ethics official before accepting such compensation.

(b) The request for an advisory opinion must be in writing, include all relevant information reasonably available to the official or former official, and be dated and signed. The request must include information about the—

(1) Procurement(s), or decision(s) on matters under 3.104–3(d)(1)(iii), involving the particular contractor, in which the individual was or is involved, including contract or solicitation numbers, dates of solicitation or award, a description of the supplies or services procured or to be procured, and contract amount;

(2) Individual's participation in the procurement or decision, including the dates or time periods of that participation, and the nature of the individual's duties, responsibilities, or actions; and

(3) Contractor, including a description of the products or services produced by the division or affiliate of the contractor from whom the individual proposes to accept compensation.

(c) Within 30 days after receipt of a request containing complete information, or as soon thereafter as practicable, the agency ethics official should issue an opinion on whether the proposed conduct would violate subsection 27(d) of the Act.

(d)(1) If complete information is not included in the request, the agency ethics official may ask the requester to provide more information or request information from other persons, including the source selection authority, the contracting officer, or the requester's immediate supervisor.

(2) In issuing an opinion, the agency ethics official may rely upon the accuracy of information furnished by the requester or other agency sources, unless he or she has reason to believe that the information is fraudulent, misleading, or otherwise incorrect.

(3) If the requester is advised in a written opinion by the agency ethics official that the requester may accept compensation from a particular contractor, and accepts such compensation in good faith reliance on that advisory opinion, then neither the requester nor the contractor will be found to have knowingly violated subsection 27(d) of the Act. If the requester or the contractor has actual knowledge or reason to believe that the opinion is based upon fraudulent, misleading, or otherwise incorrect information, their reliance upon the opinion will not be deemed to be in good faith.

3.104–7 Violations or possible violations.

(a) A contracting officer who receives or obtains information of a violation or possible violation of subsection 27(a), (b), (c), or (d) of the Act (see 3.104–3) must determine if the reported violation or possible violation has any impact on the pending award or selection of the contractor.

(1) If the contracting officer concludes that there is no impact on the procurement, the contracting officer must forward the information concerning the violation or possible violation and documentation supporting a determination that there is no impact on the procurement to an individual designated in accordance with agency procedures.

(i) If that individual concurs, the contracting officer may proceed with the procurement.

(ii) If that individual does not concur, the individual must promptly forward the information and documentation to the HCA and advise the contracting officer to withhold award.

(2) If the contracting officer concludes that the violation or possible violation impacts the procurement, the contracting officer must promptly forward the information to the HCA.

(b) The HCA must review all information available and, in accordance with agency procedures, take appropriate action, such as—

(1) Advise the contracting officer to continue with the procurement;

(2) Begin an investigation;

(3) Refer the information disclosed to appropriate criminal investigative agencies;

(4) Conclude that a violation occurred; or

(5) Recommend that the agency head determine that the contractor, or someone acting for the contractor, has engaged in conduct constituting an offense punishable under subsection 27(e) of the Act, for the purpose of voiding or rescinding the contract.

(c) Before concluding that an offeror, contractor, or person has violated the Act, the HCA may consider that the interests of the Government are best served by requesting information from appropriate parties regarding the violation or possible violation.

(d) If the HCA concludes that section 27 of the Act has been violated, the HCA may direct the contracting officer to—

(1) If a contract has not been awarded—

(i) Cancel the procurement;

(ii) Disqualify an offeror; or

(iii) Take any other appropriate actions in the interests of the Government.

(2) If a contract has been awarded—

(i) Effect appropriate contractual remedies, including profit recapture under the clause at 52.203–10, Price or Fee Adjustment for Illegal or Improper Activity, or, if the contract has been rescinded under paragraph(d)(2)(ii) of this subsection, recovery of the amount expended under the contract;

(ii) Void or rescind the contract with respect to which—

(A) The contractor or someone acting for the contractor has been convicted for an offense where the conduct constitutes a violation of subsection 27(a) or (b) of the Act for the purpose of either—

(*1*) Exchanging the information covered by the subsections for anything of value; or

(*2*) Obtaining or giving anyone a competitive advantage in the award of a Federal agency procurement contract; or

(B) The agency head has determined, based upon a preponderance of the evidence, that the contractor or someone acting for the contractor has engaged in conduct constituting an offense punishable under subsection 27(e)(1) of the Act; or

(iii) Take any other appropriate actions in the best interests of the Government.

(3) Refer the matter to the agency suspending or debarring official.

(e) The HCA should recommend or direct an administrative or contractual remedy commensurate with the severity and effect of the violation.

(f) If the HCA determines that urgent and compelling circumstances justify an award, or award is otherwise in the interests of the Government, the HCA, in accordance with agency procedures, may authorize the contracting officer to award the contract or execute the contract modification after notifying the agency head.

(g) The HCA may delegate his or her authority under this subsection to an individual at least one organizational level above the contracting officer and of General Officer, Flag, Senior Executive Service, or equivalent rank.

3.104–8 Criminal and civil penalties, and further administrative remedies.

Criminal and civil penalties, and administrative remedies, may apply to conduct that violates the Act (see 3.104–3). See 33.102(f) for special rules regarding bid protests. See 3.104–7 for administrative remedies relating to contracts.

(a) An official who knowingly fails to comply with the requirements of 3.104–3 is subject to the penalties and administrative action set forth in subsection 27(e) of the Act.

(b) An offeror who engages in employment discussion with an official subject to the restrictions of 3.104–3, knowing that the official has not complied with 3.104–3(c)(1), is subject to the criminal, civil, or administrative penalties set forth in subsection 27(e) of the Act.

(c) An official who refuses to terminate employment discussions (see 3.104–5) may be subject to agency administrative actions under 5 CFR 2635.604(d) if the official's disqualification from participation in a particular procurement interferes substantially with the individual's ability to perform assigned duties.

3.104–9 Contract clauses.

In solicitations and contracts for other than commercial items that exceed the simplified acquisition threshold, insert the clauses at—

(a) 52.203–8, Cancellation, Rescission, and Recovery of Funds for Illegal or Improper Activity; and

(b) 52.203–10, Price or Fee Adjustment for Illegal or Improper Activity.

3.704 [Amended]

4. Amend section 3.704 in paragraph (c)(1) by removing ''3.104–10'' and adding ''3.104–7'' in its place.

PART 4—ADMINISTRATIVE MATTERS

5. Amend section 4.802 in paragraphs (a)(1), (a)(2), and (a)(3) by removing '', which shall document'' and adding ''that documents'' in their place; in the introductory text of paragraph (c) by removing ''shall'' the first time it appears and adding ''must'' in its place, and removing ''shall'' the second time it appears; in the first sentence of paragraph (d) by removing ''shall'' and adding ''must'' in its place; and by revising paragraph (e) to read as follows:

4.802 Contract files.

* * * * *

(e) Contents of contract files that are contractor bid or proposal information or source selection information as defined in 2.101 must be protected from disclosure to unauthorized persons (see 3.104–4).

* * * * *

PART 9—CONTRACTOR QUALIFICATIONS

9.105–3 [Amended]

6. Amend section 9.105–3 in paragraph (c) by removing ''and/or'' and adding ''or'' in its place, and by removing ''3.104–3'' and adding ''3.104–4'' in its place.

9.505 [Amended]

7. Amend section 9.505 in paragraph (b)(2) by removing ''3.104–3'' and adding ''2.101'' in its place.

PART 15—CONTRACTING BY NEGOTIATION

8. Amend section 15.404–2 by revising paragraph (a)(5) to read as follows:

15.404–2 Information to support proposal analysis.

(a) * * *

(5) Field pricing information and other reports may include proprietary or source selection information (see 2.101). This information must be appropriately identified and protected accordingly.

* * * * *

PART 52—SOLICITATION PROVISIONS AND CONTRACT CLAUSES

52.203–8 [Amended]

9. Amend section 52.203–8 in the introductory paragraph by removing ''in solicitations and contracts''.

[FR Doc. 02–5823 Filed 3–19–02; 8:45 am]

BILLING CODE 6820–EP–P

DEPARTMENT OF DEFENSE

GENERAL SERVICES ADMINISTRATION

NATIONAL AERONAUTICS AND SPACE ADMINISTRATION

48 CFR Parts 8 and 52

[FAC 2001–06; FAR Case 2000–008; Item V]

RIN 9000–AJ09

Federal Acquisition Regulation; Acquisition of Helium

AGENCIES: Department of Defense (DoD), General Services Administration (GSA), and National Aeronautics and Space Administration (NASA).

ACTION: Final rule.

SUMMARY: The Civilian Agency Acquisition Council and the Defense Acquisition Regulations Council (Councils) have agreed on a final rule amending the Federal Acquisition Regulation (FAR) to implement the Helium Privatization Act of 1996 (Pub. L. 104–273) and associated changes to the Department of the Interior's regulations regarding its helium program.

DATES: *Effective Date:* April 4, 2002.

FOR FURTHER INFORMATION CONTACT: The FAR Secretariat, Room 4035, GS Building, Washington, DC 20405, (202) 501–4755, for information pertaining to status or publication schedules. For clarification of content, contact Ms. Linda Nelson, Procurement Analyst, at (202) 501–1900. Please cite FAC 2001–06, FAR case 2000–008.

SUPPLEMENTARY INFORMATION:

A. Background

This final rule revises FAR Subpart 8.5 and the clause at 52.208–8 to implement the Department of Interior final rule regarding helium contracts that was published in the **Federal Register** at 63 FR 66760, December 3, 1998. The final rule—

- Changes the definitions;
- Eliminates the requirement for certain contracts and subcontractors to submit helium forecasts; and
- Establishes the requirement that contractors and subcontractors under contracts with a major helium requirement must report purchases of helium from Federal helium suppliers.

DoD, GSA, and NASA published a proposed rule in the **Federal Register** at 66 FR 2752, January 11, 2001. One source, the Department of Interior, submitted a comment in response to the proposed rule, recommending that the Councils add ''Amarillo Field Office'' to the address provided in the definition of ''Bureau of Land Management'' at FAR 8.501 and the clause at 52.208–8(a). The Councils concurred with the change and included it in the final rule.

This is not a significant regulatory action, and therefore, was not subject to review under Section 6(b) of Executive Order 12866, Regulatory Planning and Review, dated September 30, 1993. This rule is not a major rule under 5 U.S.C. 804.

B. Regulatory Flexibility Act

The Department of Defense, the General Services Administration, and the National Aeronautics and Space Administration certify that this final rule will not have a significant economic impact on a substantial number of small entities within the meaning of the Regulatory Flexibility Act, 5 U.S.C. 601, *et seq.*, because the rule eliminates the information requirement for submitting helium forecasts and replaces it with a similar information requirement to report helium purchases. We estimate that the net change is zero.

C. Paperwork Reduction Act

The Paperwork Reduction Act does apply; however, these changes to the FAR do not impose additional information collection requirements to the paperwork burden previously approved under OMB Control Number 9000–0113.

List of Subjects in 48 CFR Parts 8 and 52

Government procurement.

Dated: March 6, 2002.

Al Matera,

Director, Acquisition Policy Division.

Therefore, DoD, GSA, and NASA amend 48 CFR parts 8 and 52 as set forth below:

1. The authority citation for 48 CFR parts 8 and 52 continues to read as follows:

Authority: 40 U.S.C. 486(c); 10 U.S.C. chapter 137; and 42 U.S.C. 2473(c).

PART 8—REQUIRED SOURCES OF SUPPLIES AND SERVICES

2. Revise subpart 8.5, consisting of sections 8.500 through 8.505, to read as follows:

Subpart 8.5—Acquisition of Helium

8.500 Scope of subpart.

This subpart implements the requirements of the Helium Act (50 U.S.C. 167, *et seq.*) concerning the acquisition of liquid or gaseous helium by Federal agencies or by Government contractors or subcontractors for use in the performance of a Government contract (also see 43 CFR part 3195).

8.501 Definitions.

As used in this subpart—

Bureau of Land Management means the Department of the Interior, Bureau of Land Management, Amarillo Field Office, Helium Operations, 801 South Fillmore Street, Suite 500, Amarillo, TX 79101–3545.

Federal helium supplier means a private helium vendor that has an in-kind crude helium sales contract with the Bureau of Land Management (BLM) and that is on the BLM Amarillo Field Office's Authorized List of Federal Helium Suppliers available via the Internet at *http://www.nm.blm.gov/www/amfo/amfo_home.html.*

Major helium requirement means an estimated refined helium requirement greater than 200,000 standard cubic feet (scf) (measured at 14.7 pounds per square inch absolute pressure and 70 degrees Fahrenheit temperature) of gaseous helium or 7510 liters of liquid helium delivered to a helium use location per year.

8.502 Policy.

Agencies and their contractors and subcontractors must purchase major helium requirements from Federal helium suppliers, to the extent that supplies are available.

8.503 Exception.

The requirements of this subpart do not apply to contracts or subcontracts in which the helium was acquired by the contractor prior to award of the contract or subcontract.

8.504 Procedures.

The contracting officer must forward the following information to the Bureau of Land Management within 45 days of the close of each fiscal quarter:

(a) The name of any company that supplied a major helium requirement.

(b) The amount of helium purchased.

(c) The delivery date(s).

(d) The location where the helium was used.

8.505 Contract clause.

Insert the clause at 52.208–8, Required Sources for Helium and Helium Usage Data, in solicitations and contracts if it is anticipated that performance of the contract involves a major helium requirement.

PART 52—SOLICITATION PROVISIONS AND CONTRACT CLAUSES

3. Revise the clause heading and section 52.208–8 to read as follows:

52.208–8 Required Sources for Helium and Helium Usage Data.

As prescribed in 8.505, insert the following clause:

Required Sources for Helium and Helium Usage Data (Apr 2002)

(a) *Definitions.*

Bureau of Land Management, as used in this clause, means the Department of the Interior, Bureau of Land Management, Amarillo Field Office, Helium Operations, located at 801 South Fillmore Street, Suite 500, Amarillo, TX 79101–3545.

Federal helium supplier means a private helium vendor that has an in-kind crude helium sales contract with the Bureau of Land Management (BLM) and that is on the BLM Amarillo Field Office's Authorized List of Federal Helium Suppliers available via the Internet at http://www.nm.blm.gov/www/amfo/amfo_home.html.

Major helium requirement means an estimated refined helium requirement greater than 200,000 standard cubic feet (scf) (measured at 14.7 pounds per square inch absolute pressure and 70 degrees Fahrenheit temperature) of gaseous helium or 7510 liters of liquid helium delivered to a helium use location per year.

(b) *Requirements*—(1) Contractors must purchase major helium requirements from Federal helium suppliers, to the extent that supplies are available.

(2) The Contractor shall provide to the Contracting Officer the following data within 10 days after the Contractor or subcontractor receives a delivery of helium from a Federal helium supplier—

(i) The name of the supplier;

(ii) The amount of helium purchased;

(iii) The delivery date(s); and

(iv) The location where the helium was used.

(c) *Subcontracts.* The Contractor shall insert this clause, including this paragraph (c), in any subcontract or order that involves a major helium requirement.

(End of clause)

[FR Doc. 02–5824 Filed 3–19–02; 8:45 am]

BILLING CODE 6820–EP–P

DEPARTMENT OF DEFENSE

GENERAL SERVICES ADMINISTRATION

NATIONAL AERONAUTICS AND SPACE ADMINISTRATION

48 CFR Parts 12, 19, and 52

[FAC 2001–06; FAR Case 2001–003; Item VI]

RIN 9000–AJ32

Federal Acquisition Regulation; HUBZone Program Applicability

AGENCIES: Department of Defense (DoD), General Services Administration (GSA), and National Aeronautics and Space Administration (NASA).

ACTION: Final rule.

SUMMARY: The Civilian Agency Acquisition Council and the Defense Acquisition Regulations Council (Councils) have agreed on a final rule that amends the Federal Acquisition Regulation (FAR) to simplify current FAR language that expands the applicability of the HUBZone Program to all agencies covered by the FAR after September 30, 2000.

DATES: *Effective Date:* April 4, 2002.

FOR FURTHER INFORMATION CONTACT: The FAR Secretariat, Room 4035, GS Building, Washington, DC 20405, (202) 501–4755, for information pertaining to status or publication schedules. For clarification of content, contact Ms. Rhonda Cundiff, Procurement Analyst, at (202) 501–0044. Please cite FAC 2001–06, FAR case 2001–003.

SUPPLEMENTARY INFORMATION:

A. Background

This final rule amends and simplifies language at FAR Parts 12, 19, and 52. Current FAR language expands the applicability of the HUBZone Program to all agencies covered by the FAR after September 30, 2000. Initially, procurements under the HUBZone Program applied to a limited list of Federal agencies. Under Section 602(b) of the HUBZone Act of 1997 (Title VI of Pub. L. 105–135), this initial limited applicability expired on September 30, 2000.

The purpose of the program is to provide Federal contracting assistance for qualified small business concerns located in historically underutilized business zones in an effort to increase employment opportunities, investment, and economic development in these areas. The program provides for set-asides, sole-source awards, and price evaluation preferences for HUBZone small business concerns and establishes goals for awards to such concerns.

This is not a significant regulatory action, and therefore, was not subject to review under Section 6(b) of Executive Order 12866, Regulatory Planning and Review, dated September 30, 1993. This rule is not a major rule under 5 U.S.C. 804.

B. Regulatory Flexibility Act

This final rule does not constitute a significant FAR revision within the meaning of FAR 1.501 and Public Law 98–577, and publication for public comments is not required. However, the Councils will consider comments from small entities concerning the affected FAR Parts 12, 19, and 52 in accordance with 5 U.S.C. 610. Interested parties must submit such comments separately and should cite 5 U.S.C. 601, *et seq.* (FAC 2001–06, FAR case 2001–003), in correspondence.

C. Paperwork Reduction Act

The Paperwork Reduction Act does not apply because the changes to the FAR do not impose information collection requirements that require the approval of the Office of Management and Budget under 44 U.S.C. 3501, *et seq.*

List of Subjects in 48 CFR Parts 12, 19, and 52

Government procurement.

Dated: March 6, 2002.

Al Matera,

Director, Acquisition Policy Division.

Therefore, DoD, GSA, and NASA amend 48 CFR parts 12, 19, and 52 as set forth below:

1. The authority citation for 48 CFR parts 12, 19, and 52 continues to read as follows:

Authority: 40 U.S.C. 486(c); 10 U.S.C. chapter 137; and 42 U.S.C. 2473(c).

PART 12—ACQUISITION OF COMMERCIAL ITEMS

2. Amend section 12.301 by revising the introductory text of paragraph (b) and (b)(2) to read as follows:

12.301 Solicitation provisions and contract clauses for the acquisition of commercial items.

* * * * *

(b) Insert the following provisions in solicitations for the acquisition of commercial items, and clauses in solicitations and contracts for the acquisition of commercial items:

* * * * *

(2) *The provision at 52.212–3, Offeror Representations and Certifications—Commercial Items.* This provision provides a single, consolidated list of certifications and representations for the acquisition of commercial items and is attached to the solicitation for offerors to complete and return with their offer. This provision may not be tailored except in accordance with Subpart 1.4. Use the provision with its Alternate I in solicitations issued by DoD, NASA, or the Coast Guard that are expected to exceed the threshold at 4.601(a). Use the provision with its Alternate II in solicitations for acquisitions for which small disadvantaged business procurement mechanisms are authorized on a regional basis;

* * * * *

PART 19—SMALL BUSINESS PROGRAMS

19.307 [Amended]

3. Amend section 19.307 by removing paragraph (a)(2); by redesignating paragraph (a)(3) as (a)(2); in the newly designated paragraph (a)(2) by removing ''Alternate II'' and adding ''Alternate I'' in its place; and in paragraph (c) by removing ''and contracts''.

4. Revise section 19.1302 to reads as follows:

19.1302 Applicability.

The procedures in this subpart apply to all Federal agencies that employ one or more contracting officers.

PART 52—SOLICITATION PROVISIONS AND CONTRACT CLAUSES

5. Amend section 52.212–3 by revising the date of the provision; by adding paragraph (c)(10); by revising the introductory text of Alternate I; by redesignating paragraph (c)(10) of Alternate I as (c)(11); and by removing Alternate III. The revised and added text reads as follows:

52.212–3 Offeror Representations and Certifications—Commercial Items.

* * * * *

Offeror Representations and Certifications—Commercial Items (Apr 2002)

* * * * *

(c) * * *

(10) *HUBZone small business concern.* [Complete only if the offeror represented itself as a small business concern in paragraph (c)(1) of this provision.] The offeror represents, as part of its offer, that—

(i) It [ ] is, [ ] is not a HUBZone small business concern listed, on the date of this representation, on the List of Qualified HUBZone Small Business Concerns maintained by the Small Business Administration, and no material change in ownership and control, principal place of ownership, or HUBZone employee percentage has occurred since it was certified by the Small Business Administration in accordance with 13 CFR part 126; and

(ii) It [ ] is, [ ] is not a joint venture that complies with the requirements of 13 CFR part 126, and the representation in paragraph (c)(10)(i) of this provision is accurate for the HUBZone small business concern or concerns that are participating on the joint venture. [*The offeror shall enter the name or names of the HUBZone small business concern or concerns that are participating in the joint venture:*_____.] Each HUBZone small business concern participating in the joint venture shall submit a separate signed copy of the HUBZone representation.

* * * * *

Alternate I (Apr 2002). As prescribed in 12.301(b)(2), add the following paragraph (c)(11) to the basic provision:

* * * * *

6. Amend section 52.219–1 by revising the date of the provision; by adding paragraph (b)(6); by removing Alternate I and redesignating Alternate II as Alternate I; and by revising the introductory text of the newly designated Alternate I to read as follows:

52.219–1 Small Business Program Representations.

* * * * *

Small Business Program Representations (Apr 2002)

* * * * *

(b) * * *

(6) [*Complete only if the offeror represented itself as a small business concern in paragraph (b)(1) of this provision.*] The offeror represents, as part of its offer, that—

(i) It [ ] is, [ ] is not a HUBZone small business concern listed, on the date of this representation, on the List of Qualified HUBZone Small Business Concerns maintained by the Small Business Administration, and no material change in ownership and control, principal office, or HUBZone employee percentage has occurred since it was certified by the Small Business Administration in accordance with 13 CFR part 126; and

(ii) It [ ] is, [ ] is not a joint venture that complies with the requirements of 13 CFR part 126, and the representation in paragraph (b)(6)(i) of this provision is accurate for the HUBZone small business concern or concerns that are participating in the joint venture. [*The offeror shall enter the name or names of the HUBZone small business concern or concerns that are participating in the joint venture:*_____.] Each HUBZone small business concern participating in the joint venture shall submit a separate signed copy of the HUBZone representation.

* * * * *

Alternate I (Apr 2002). As prescribed in 19.307(a)(2), add the following paragraph (b)(7) to the basic provision:

* * * * *

[FR Doc. 02–5825 Filed 3–19–02; 8:45 am]

BILLING CODE 6820–EP–P

DEPARTMENT OF DEFENSE

GENERAL SERVICES ADMINISTRATION

NATIONAL AERONAUTICS AND SPACE ADMINISTRATION

48 CFR Part 52

[FAC 2001–06; FAR Case 1999–612; Item VII]

RIN 9000–AI95

Federal Acquisition Regulation; Application of Labor Clauses

AGENCIES: Department of Defense (DoD), General Services Administration (GSA), and National Aeronautics and Space Administration (NASA).

ACTION: Final rule.

SUMMARY: The Civilian Agency Acquisition Council and the Defense Acquisition Regulations Council (Councils) have agreed on a final rule amending the Federal Acquisition Regulation (FAR) by revising the clause, Terms and Conditions—Simplified Acquisitions (Other Than Commercial Items), to clarify the application of labor clauses below the simplified acquisition threshold. The Councils also revised the Equal Opportunity clause to incorporate the exception for work performed outside the United States.

DATES: *Effective Date:* April 4, 2002.

FOR FURTHER INFORMATION CONTACT: The FAR Secretariat, Room 4035, GS Building, Washington, DC 20405, (202) 501–4755, for information pertaining to status or publication schedules. For clarification of content, contact Ms. Linda Nelson, Procurement Analyst, at (202) 501–1900. Please cite FAC 2001–06, FAR case 1999–612.

SUPPLEMENTARY INFORMATION:

A. Background

This final rule—

1. Moves the Prohibition of Segregated Facilities clause from the list at paragraph (b), to the list at paragraph (a), of the clause at 52.213–4 and clarifies the existing requirements of 41 CFR 60–1.8, promulgated by the Department of Labor under E.O. 11246. The Prohibition of Segregated Facilities clause must be included in contracts whenever the Equal Opportunity clause (FAR 52.222–26) is included.

2. Moves the Equal Opportunity clause from the list at paragraph (b), to the list at paragraph (a), of the clause at 52.213–4 because the clause must be included in almost all contracts, even those under $10,000, in accordance with the requirements at FAR 22.802(a)(1)

and 22.807(b). Even though included, the clause is inapplicable unless the aggregate value of contracts and subcontracts awarded to the contractor exceeds $10,000 in a year.

3. Makes other revisions to paragraphs (b)(1)(i), (b)(1)(v), and (b)(1)(vii) of the clause at FAR 52.213–4, and paragraph (a) of the clause at FAR 52.222–26, relating to geographic applicability of labor clauses, to comply with the current regulations at FAR 22.603, 22.807(b)(2), 22.1001, 22.1003–2, and 22.1408(a)(1).

DoD, GSA, and NASA published a proposed rule in the **Federal Register** at 65 FR 64298, October 26, 2000. Two respondents submitted public comments. One respondent is in favor of the rule, while the other commenter believes the 52.222–36 clause change creates a double standard, strongly favoring Americans, while making non-Americans working outside the United States susceptible to abuses by contractors. The Councils believe that the comment is outside the scope of the rule. The clause at 52.222–36 does not apply to employees recruited outside the United States for work performed outside the United States. This has been in the FAR since this FAR subpart was written in 1984. It is in the Department of Labor regulation which is the source of the FAR subpart (see 41 CFR 60–741.4(a)(4)). The concept is that the country in which the work is performed has the sovereignty to write its own laws regarding affirmative action of those disabled workers. This case confirms that this long-standing exception applies to items whether commercial or noncommercial. Accordingly, the comments resulted in no change to the rule.

This is not a significant regulatory action, and therefore, was not subject to review under Section 6(b) of Executive Order 12866, Regulatory Planning and Review, dated September 30, 1993. This rule is not a major rule under 5 U.S.C. 804.

B. Regulatory Flexibility Act

The Department of Defense, the General Services Administration, and the National Aeronautics and Space Administration certify that this final rule will not have a significant economic impact on a substantial number of small entities within the meaning of the Regulatory Flexibility Act, 5 U.S.C. 601, *et seq.*, because this rule only clarifies the existing requirements.

C. Paperwork Reduction Act

The Paperwork Reduction Act does not apply because the changes to the FAR do not impose information collection requirements that require the approval of the Office of Management and Budget under 44 U.S.C. 3501, *et seq.*

List of Subjects in 48 CFR Part 52

Government procurement.

Dated: March 6, 2002.

Al Matera,

Director, Acquisition Policy Division.

Therefore, DoD, GSA, and NASA amend 48 CFR part 52 as set forth below:

PART 52—SOLICITATION PROVISIONS AND CONTRACT CLAUSES

1. The authority citation for 48 CFR part 52 continues to read as follows:

Authority: 40 U.S.C. 486(c); 10 U.S.C. chapter 137; and 42 U.S.C. 2473(c).

2. Amend section 52.213–4 by—

a. Revising the date of the clause;

b. Redesignating paragraphs (a)(1)(ii) and (a)(1)(iii) as (a)(1)(iv) and (a)(1)(v), respectively, and adding new paragraphs (a)(1)(ii) and (a)(1)(iii);

c. Removing paragraphs (b)(1)(ii) and (b)(1)(iii), and redesignating paragraphs (b)(1)(iv) through (b)(1)(xiii) as (b)(1)(ii) through (b)(1)(xi), respectively; and

d. Revising paragraph (b)(1)(i) and newly designated paragraphs (b)(1)(iii) and (b)(1)(v).

The added and revised text reads as follows:

52.213–4 Terms and Conditions Simplified Acquisitions (Other Than Commercial Items).

* * * * *

Terms and Conditions—Simplified Acquisitions (Other Than Commercial Items) (Apr 2002)

(a) * * *

(1) * * *

(ii) 52.222–21, Prohibition of Segregated Facilities (Feb 1999) (E.O. 11246).

(iii) 52.222–26, Equal Opportunity (Apr 2002) (E.O. 11246).

* * * * *

(b) * * *

(1)

(i) 52.222–20, Walsh-Healey Public Contracts Act (Dec 1996) (41 U.S.C. 35–45) (Applies to supply contracts over $10,000 in the United States, Puerto Rico, or the U.S. Virgin Islands).

* * * * *

(iii) 52.222–36, Affirmative Action for Workers with Disabilities (June 1998) (29 U.S.C. 793). (Applies to contracts over $10,000, unless the work is to be performed outside the United States by employees recruited outside the United States.) (For purposes of this clause, *United States* includes the 50 States, the District of Columbia, Puerto Rico, the Northern Mariana Islands, American Samoa, Guam, the U.S. Virgin Islands, and Wake Island.)

* * * * *

(v) 52.222–41, Service Contract Act of 1965, As Amended (May 1989) (41 U.S.C. 351, *et seq.*) (Applies to service contracts over $2,500 that are subject to the Service Contract Act and will be performed in the United States, District of Columbia, Puerto Rico, the Northern Mariana Islands, American Samoa, Guam, the U.S. Virgin Islands, Johnston Island, Wake Island, or the outer continental shelf lands).

* * * * *

3. Amend section 52.222–26 by—

a. Revising the date of the clause;

b. Removing the paragraph designation and the introductory text of paragraph (b);

c. Redesignating paragraph (a) as paragraph (b) and revising the introductory text; and

d. Adding a new paragraph (a).

The added and revised text reads as follows:

52.222–26 Equal Opportunity.

* * * * *

Equal Opportunity (Apr 2002)

(a) *Definition. United States,* as used in this clause, means the 50 States, the District of Columbia, Puerto Rico, the Northern Mariana Islands, American Samoa, Guam, the U.S. Virgin Islands, and Wake Island.

(b) If, during any 12-month period (including the 12 months preceding the award of this contract), the Contractor has been or is awarded nonexempt Federal contracts and/or subcontracts that have an aggregate value in excess of $10,000, the Contractor shall comply with paragraphs (b)(1) through (b)(11) of this clause, except for work performed outside the United States by employees who were not recruited within the United States. Upon request, the Contractor shall provide information necessary to determine the applicability of this clause.

* * * * *

[FR Doc. 02–5826 Filed 3–19–02; 8:45 am]

BILLING CODE 6820–EP–P

DEPARTMENT OF DEFENSE

GENERAL SERVICES ADMINISTRATION

NATIONAL AERONAUTICS AND SPACE ADMINISTRATION

48 CFR Parts 1, 5, 6, 9, 31, and 52

[FAC 2001–06; Item VIII]

Federal Acquisition Regulation; Technical Amendments

AGENCIES: Department of Defense (DoD), General Services Administration (GSA), and National Aeronautics and Space Administration (NASA).

ACTION: Final rule.

SUMMARY: This document makes amendments to the Federal Acquisition Regulation in order to update references and make editorial changes.

DATES: *Effective Date:* April 4, 2002.

FOR FURTHER INFORMATION CONTACT: The FAR Secretariat, Room 4035, GS Building, Washington, DC 20405, (202) 501–4755. Please cite FAC 2001–06, Technical Amendments.

List of Subjects in 48 CFR Parts 1, 5, 6, 9, 31, and 52

Government procurement.

Dated: March 6, 2002.

Al Matera,

Director, Acquisition Policy Division.

Therefore, DoD, GSA, and NASA amend 48 CFR parts 1, 5, 6, 9, and 52 as set forth below:

1. The authority citation for 48 CFR parts 1, 5, 6, 9, and 52 continues to read as follows:

Authority: 40 U.S.C. 486(c); 10 U.S.C. chapter 137; and 42 U.S.C. 2473(c).

PART 1—FEDERAL ACQUISITION REGULATIONS SYSTEM

1.404 [Amended]

2. Amend section 1.404 in paragraph (c) by removing ''Associate'' and adding ''Assistant'' in its place.

PART 5—PUBLICIZING CONTRACT ACTIONS

5.207 [Amended]

3. Amend section 5.207(c)(4) in paragraph 6. of ''Format Item and Explanation/Description of Entry'' by removing ''5.207(g)'' and adding ''5.207(h)'' in its place.

PART 6—COMPETITION REQUIREMENTS

6.302–5 [Amended]

4. Amend section 6.302–5 in paragraph (b)(2) by removing the word ''Handicapped'' and adding ''Disabled'' in its place.

PART 9—CONTRACTOR QUALIFICATIONS

9.104–3 [Amended]

5. Amend section 9.104–3 in paragraph (c) by removing ''(see *Affiliates* and *Concerns* in 19.101)'' and adding ''(see *Concern* in 19.001 and *Affiliates* in 19.101)'' in its place.

PART 31—CONTRACT COST PRINCIPLES AND PROCEDURES

31.101 [Amended]

6. Amend section 31.101 in the next-to-the-last sentence by removing ''Associate'' and adding ''Assistant'' in its place.

PART 52—SOLICITATION PROVISIONS AND CONTRACT CLAUSES

52.219–19 [Amended]

7. Amend section 52.219–19 in the introductory text by removing ''19.1007(a)'' and adding ''19.1008(a)'' in its place.

52.219–20 [Amended]

8. Amend section 52.219–20 in the introductory text by removing ''19.1007(b)'' and adding ''19.1008(b)'' in its place.

[FR Doc. 02–5827 Filed 3–19–02; 8:45 am]

BILLING CODE 6820–EP–P

DEPARTMENT OF DEFENSE

GENERAL SERVICES ADMINISTRATION

NATIONAL AERONAUTICS AND SPACE ADMINISTRATION

48 CFR Chapter 1

Federal Acquisition Regulation; Small Entity Compliance Guide

AGENCIES: Department of Defense (DoD), General Services Administration (GSA), and National Aeronautics and Space Administration (NASA).

ACTION: Small Entity Compliance Guide.

SUMMARY: This document is issued under the joint authority of the Secretary of Defense, the Administrator of General Services and the Administrator for the National Aeronautics and Space Administration. This *Small Entity Compliance Guide* has been prepared in accordance with Section 212 of the Small Business Regulatory Enforcement Fairness Act of 1996 (Public Law 104–121). It consists of a summary of rules appearing in Federal Acquisition Circular (FAC) 2001–06 which amend the FAR. An asterisk (*) next to a rule indicates that a Regulatory Flexibility Analysis has been prepared in accordance with 5 U.S.C. 604. Interested parties may obtain further information regarding these rules by referring to FAC 2001–06 which precedes this document. These documents are also available via the Internet at *http://www.arnet.gov/far.*

FOR FURTHER INFORMATION CONTACT: Laurie Duarte, FAR Secretariat, (202) 501–4225. For clarification of content, contact the analyst whose name appears in the table below.

LIST OF RULES IN FAC 2001–06

Item	Subject	FAR case	Analyst
I	Commercial Items—Standard Form 1449	2000–012	Moss.
II	Definitions for ''Contract Action'' and ''Contracting Action''	2000–402	Moss.
III	Definitions for Sealed Bid and Negotiated Procurements	2000–403	DeStefano.
IV	Procurement Integrity Rewrite	1998–024	DeStefano.
V	Acquisition of Helium	2000–008	Nelson.
VI	HUBZone Program Applicability	2001–003	Cundiff.
VII	Application of Labor Clauses	1999–612	Nelson.
VIII	Technical Amendments.		

Item I—Commercial Items—SF 1449 (FAR Case 2000–012)

Standard Form 1449, Solicitation/Contract/Order for Commercial Items, is prescribed by the FAR for the acquisition of commercial items. This final rule makes several minor revisions to the form, including the addition of a block to indicate that the acquisition is a HUBZone set-aside, the substitution of a NAICS code for the SIC code, the notation that award is made only on the offeror's items specifically listed in block 29, and the addition of several blocks in the area of the form used as a receiving report by the Government. All of the changes involve blocks that are completed by the Government.

Item II—Definitions for ''Contract Action'' and ''Contracting Action'' (FAR Case 2000–402)

This final rule amends the FAR to provide for consistent use of the term ''contract action.'' The rule changes the term ''contracting action'' to ''contract action'' throughout the FAR and makes other editorial changes to clarify the text.

Item III—Definitions for Sealed Bid and Negotiated Procurements (FAR Case 2000–403)

This final rule amends the FAR to clarify definitions that are used for sealed bid and negotiated procurements. The final rule—

- Moves the definitions of ''bid sample'' and ''descriptive literature'' from FAR Part 14 to FAR 2.101 because the definitions apply to more than one FAR part, *e.g.,* parts 14 and 15;
- Amends those definitions and the definition of ''offer'' in accordance with plain language guidelines;
- Revises applicable provisions in FAR Part 52 to conform with the new definitions;
- Adds a new definition for ''solicitation'' at FAR 2.101; and
- Provides definitions for ''bid'' and ''bidder'' in FAR Part 28 because, as used in that part, the terms address sealed bid and negotiated acquisitions.

The rule clarifies terminology used in FAR 15.201(f), 15.609(e), and 35.007(g). Where we mean an entity that is actively seeking a contract, we use the term ''prospective offeror.'' However, those cites describe processes that are set up to ensure fair and open competition. Therefore, any interested party is able to participate, including parties that the Government has not yet identified. Therefore, the rule uses the more general term ''potential offeror.''

Item IV—Procurement Integrity Rewrite (FAR Case 1998–024)

This final rule amends FAR parts 2, 3, 4, 9, 15, and 52 to rewrite the procurement integrity coverage (the implementation of section 27 of the Office of Federal Procurement Policy Act (41 U.S.C. 423) (more commonly referred to as the Procurement Integrity Act)) in plain language.

FAR 3.104 implements prohibitions, restrictions, and other requirements of the Procurement Integrity Act that are placed on certain agency officials that participate in Federal agency procurements. However, other statutes and regulations also govern the conduct of Government employees. While specific guidance pertaining to the Procurement Integrity Act at FAR 3.104 does not implement these other statutes and regulations, the rule does add guidance to alert these agency officials that they should seek advice from agency ethics officials before engaging in certain activities that could have serious consequences, including criminal prosecution.

These revisions to FAR 3.104 do not change either the requirements of the Procurement Integrity Act or change, in any manner, who is covered by, or the activities covered in, Office of Government Ethics regulations interpreting conflict of interest statutes.

Item V—Acquisition of Helium (FAR Case 2000–008)

This final rule revises FAR Subpart 8.5 and the clause at 52.208–8 to implement the Department of the Interior final rule regarding helium contracts that was published in the **Federal Register** at 63 FR 66760, December 3, 1998. The final rule—

- Changes the definitions;
- Eliminates the requirement for certain contractors and subcontractors to submit helium forecasts; and
- Establishes the requirement that contractors and subcontractors under contracts with a major helium requirement must report purchases of helium from Federal helium suppliers.

Item VI—HUBZone Program Applicability (FAR Case 2001–003)

The HUBZone Act of 1997 expanded the applicability of the HUBZONE Program to all agencies covered by the FAR after September 30, 2000, and is currently reflected in the FAR. This rule amends the FAR to simplify the existing language at FAR parts 12, 19, and 52.

Item VII—Application of Labor Clauses (FAR Case 1999–612)

This final rule affects all contracting officers who use the FAR. The rule—

- Moves the Prohibition of Segregated Facilities clause from the list at paragraph (b), to the list at paragraph (a), of the clause at 52.213–4 and clarifies the existing requirements of 41 CFR 60–1.8, promulgated by the Department of Labor under E.O. 11246. The Prohibition of Segregated Facilities clause must be included in contracts whenever the Equal Opportunity clause (FAR 52.222–26) is included.
- Moves the Equal Opportunity clause from the list at paragraph (b), to the list at paragraph (a), of the clause at 52.213–4 because the clause must be included in almost all contracts, even those under $10,000, in accordance with the requirements at FAR 22.802(a)(1) and 22.807(b). Even though included, the clause is inapplicable unless the aggregate value of contracts and subcontracts awarded to the contractor exceeds $10,000 in a year.
- Makes other revisions to the clause at FAR 52.222–26, Equal Opportunity, to include a definition of ''United States'' and incorporate the exception for work performed outside the United States.

Item VIII—Technical Amendments

These amendments update sections and make editorial changes at FAR 1.404, 5.207, 6.302–5, 9.104–3, 31.101, 52.219–19, and 52.219–20.

Dated: March 6, 2002.

Al Matera,

Director, Acquisition Policy Division.

[FR Doc. 02–5828 Filed 3–19–02; 8:45 am]

BILLING CODE 6820–EP–P

Federal Register

Wednesday,
March 20, 2002

Part II

Department of Defense
General Services Administration
National Aeronautics and Space Administration

48 CFR Parts 1, 2, et al.
Federal Acquistion Circular and Regulations; Final Rules

DEPARTMENT OF DEFENSE

GENERAL SERVICES ADMINISTRATION

NATIONAL AERONAUTICS AND SPACE ADMINISTRATION

48 CFR Chapter 1

Federal Acquisition Circular 2001–06; Introduction

AGENCIES: Department of Defense (DoD), General Services Administration (GSA), and National Aeronautics and Space Administration (NASA).

ACTION: Summary presentation of final rules.

SUMMARY: This document summarizes the Federal Acquisition Regulation (FAR) rules agreed to by the Civilian Agency Acquisition Council and the Defense Acquisition Regulations Council in this Federal Acquisition Circular (FAC) 2001–06. A companion document, the Small Entity Compliance Guide (SECG), follows this FAC. The FAC, including the SECG, is available via the Internet at *http://www.arnet.gov/far.*

DATES: For effective dates and comment dates, see separate documents which follow.

FOR FURTHER INFORMATION CONTACT: The FAR Secretariat, Room 4035, GS Building, Washington, DC 20405, (202) 501–4755, for information pertaining to status or publication schedules. For clarification of content, contact the analyst whose name appears in the table below in relation to each FAR case or subject area. Please cite FAC 2001–06 and specific FAR case number(s). Interested parties may also visit our website at *http://www.arnet.gov/far.*

Item	Subject	FAR Case	Analyst
I	Commercial Items—Standard Form 1449	2000–012	Moss.
II	Definitions for ''Contract Action'' and ''Contracting Action''	2000–402	Moss.
III	Definitions for Sealed Bid and Negotiated Procurements	2000–403	DeStefano.
IV	Procurement Integrity Rewrite	1998–024	DeStefano.
V	Acquisition of Helium	2000–008	Nelson.
VI	HUBZone Program Applicability	2001–003	Cundiff.
VII	Application of Labor Clauses	1999–612	Nelson.
VIII	Technical Amendments.		

SUPPLEMENTARY INFORMATION: Summaries for each FAR rule follow. For the actual revisions and/or amendments to these FAR cases, refer to the specific item number and subject set forth in the documents following these item summaries.

FAC 2001–06 amends the FAR as specified below:

Item I—Commercial Items SF 1449 (FAR Case 2000–012)

Standard Form 1449, Solicitation/Contract/Order for Commercial Items, is prescribed by the FAR for the acquisition of commercial items. This final rule makes several minor revisions to the form, including the addition of a block to indicate that the acquisition is a HUBZone set-aside, the substitution of a NAICS code for the SIC code, the notation that award is made only on the offeror's items specifically listed in block 29, and the addition of several blocks in the area of the form used as a receiving report by the Government. All of the changes involve blocks that are completed by the Government.

Item II—Definitions for ''Contract Action'' and ''Contracting Action'' (FAR Case 2000–402)

This final rule amends the FAR to provide for consistent use of the term ''contract action.'' The rule changes the term ''contracting action'' to ''contract action'' throughout the FAR and makes other editorial changes to clarify the text.

Item III—Definitions for Sealed Bid and Negotiated Procurements (FAR Case 2000–403)

This final rule amends the FAR to clarify definitions that are used for sealed bid and negotiated procurements. The final rule—

- Moves the definitions of ''bid sample'' and ''descriptive literature'' from FAR Part 14 to FAR 2.101 because the definitions apply to more than one FAR part, *e.g.,* Parts 14 and 15;
- Amends those definitions and the definition of ''offer'' in accordance with plain language guidelines;
- Revises applicable provisions in FAR Part 52 to conform with the new definitions;
- Adds a new definition for ''solicitation'' at FAR 2.101; and
- Provides definitions for ''bid'' and ''bidder'' in FAR Part 28 because, as used in that part, the terms address sealed bid and negotiated acquisitions.

The rule clarifies terminology used in FAR 15.201(f), 15.609(e), and 35.007(g). Where we mean an entity that is actively seeking a contract, we use the term ''prospective offeror.'' However, those cites describe processes that are set up to ensure fair and open competition. Therefore, any interested party is able to participate, including parties that the Government has not yet identified. Therefore, the rule uses the more general term ''potential offeror.''

Item IV—Procurement Integrity Rewrite (FAR Case 1998–024)

This final rule amends FAR parts 2, 3, 4, 9, 15, and 52 to rewrite the procurement integrity coverage (the implementation of section 27 of the Office of Federal Procurement Policy Act (41 U.S.C. 423) (more commonly referred to as the Procurement Integrity Act)) in plain language.

FAR 3.104 implements prohibitions, restrictions, and other requirements of the Procurement Integrity Act that are placed on certain agency officials that participate in Federal agency procurements. However, other statutes and regulations also govern the conduct of Government employees. While specific guidance pertaining to the Procurement Integrity Act at FAR 3.104 does not implement these other statutes and regulations, the rule does add guidance to alert these agency officials that they should seek advice from agency ethics officials before engaging in certain activities that could have serious consequences, including criminal prosecution.

These revisions to FAR 3.104 do not change either the requirements of the Procurement Integrity Act or change, in any manner, who is covered by, or the activities covered in, Office of Government Ethics regulations interpreting conflict of interest statutes.

Item V—Acquisition of Helium (FAR Case 2000–008)

This final rule revises FAR Subpart 8.5 and the clause at 52.208–8 to

implement the Department of the Interior final rule regarding helium contracts that was published in the **Federal Register** at 63 FR 66760, December 3, 1998. The final rule—

- Changes the definitions;
- Eliminates the requirement for certain contractors and subcontractors to submit helium forecasts; and
- Establishes the requirement that contractors and subcontractors under contracts with a major helium requirement must report purchases of helium from Federal helium suppliers.

Item VI—HUBZone Program Applicability (FAR Case 2001–003)

The HUBZone Act of 1997 expanded the applicability of the HUBZONE Program to all agencies covered by the FAR after September 30, 2000, and is currently reflected in the FAR. This rule amends the FAR to simplify the existing language at FAR Parts 12, 19, and 52.

Item VII—Application of Labor Clauses (FAR Case 1999–612)

This final rule affects all contracting officers who use the FAR. The rule—

- Moves the Prohibition of Segregated Facilities clause from the list at paragraph (b), to the list at paragraph (a), of the clause at 52.213–4 and clarifies the existing requirements of 41 CFR 60–1.8, promulgated by the Department of Labor under E.O. 11246. The Prohibition of Segregated Facilities clause must be included in contracts whenever the Equal Opportunity clause (FAR 52.222–26) is included.
- Moves the Equal Opportunity clause from the list at paragraph (b), to the list at paragraph (a), of the clause at 52.213–4 because the clause must be included in almost all contracts, even those under $10,000, in accordance with the requirements at FAR 22.802(a)(1) and 22.807(b). Even though included, the clause is inapplicable unless the aggregate value of contracts and subcontracts awarded to the contractor exceeds $10,000 in a year.
- Makes other revisions to the clause at FAR 52.222–26, Equal Opportunity, to include a definition of ''United States'' and incorporate the exception for work performed outside the United States.

Item VIII—Technical Amendments

These amendments update sections and make editorial changes at FAR 1.404, 5.207, 6.302–5, 9.104–3, 31.101, 52.219–19, and 52.219–20.

Dated: March 6, 2002.

Al Matera,

Director, Acquisition Policy Division.

Federal Acquisition Circular

Federal Acquisition Circular (FAC) 2001–06 is issued under the authority of the Secretary of Defense, the Administrator of General Services, and the Administrator for the National Aeronautics and Space Administration.

Unless otherwise specified, all Federal Acquisition Regulation (FAR) and other directive material contained in FAC 2001–06 are effective April 4, 2002.

Dated: March 4, 2002.

Deidre A. Lee,

Director, Defense Procurement.

Dated: March 4, 2002.

David A. Drabkin,

Deputy Associate Administrator, Office of Acquisition Policy, General Services Administration.

Dated: March 1, 2002.

Tom Luedtke,

Assistant Administrator for Procurement, National Aeronautics and Space Administration.

[FR Doc. 02–5819 Filed 3–19–02; 8:45 am]

BILLING CODE 6820–EP–P

DEPARTMENT OF DEFENSE

GENERAL SERVICES ADMINISTRATION

NATIONAL AERONAUTICS AND SPACE ADMINISTRATION

48 CFR Parts 1 and 53

[FAC 2001–06; FAR Case 2000–012; Item I]

RIN 9000–AJ31

Federal Acquisition Regulation; Commercial Items—Standard Form 1449

AGENCIES: Department of Defense (DoD), General Services Administration (GSA), and National Aeronautics and Space Administration (NASA).

ACTION: Final rule.

SUMMARY: The Civilian Agency Acquisition Council and the Defense Acquisition Regulations Council (Councils) have agreed on a final rule amending the Federal Acquisition Regulation (FAR) to update Standard Form 1449, Solicitation/Contract/Order for Commercial Items.

DATES: *Effective Date:* April 4, 2002.

FOR FURTHER INFORMATION CONTACT: The FAR Secretariat, Room 4035, GS Building, Washington, DC 20405, (202) 501–4755, for information pertaining to status or publication schedules. For clarification of content, contact Ms. Victoria Moss, Procurement Analyst, at (202) 501–4764. Please cite FAC 2001–06, FAR case 2000–012.

SUPPLEMENTARY INFORMATION:

A. Background

Standard Form 1449, Solicitation/Contract/Order for Commercial Items, is prescribed by the FAR for the acquisition of commercial items. This final rule makes several minor revisions to the form, including the addition of a block to indicate that the acquisition is a HUBZone set-aside, the substitution of a NAICS code for the SIC code, the notation that award is made only on the offeror's items specifically listed in block 29, and the addition of several blocks in the area of the form used as a receiving report by the Government. None of the changes involve blocks that are completed by the public.

This is not a significant regulatory action, and therefore, was not subject to review under Section 6(b) of Executive Order 12866, Regulatory Planning and Review, dated September 30, 1993. This rule is not a major rule under 5 U.S.C. 804.

B. Regulatory Flexibility Act

This final rule does not constitute a significant FAR revision within the meaning of FAR 1.501 and Public Law 98–577, and publication for public comments is not required. However, the Councils will consider comments from small entities concerning the affected FAR parts 1 and 52 in accordance with 5 U.S.C. 610. Interested parties must submit such comments separately and should cite 5 U.S.C. 601, *et seq.* (FAC 2001–06, FAR case 2000–012), in correspondence.

C. Paperwork Reduction Act

The Paperwork Reduction Act does not apply because these changes to the FAR do not impose additional information collection requirements to the paperwork burden previously approved under OMB Control Number 9000–0136. The previous edition of the form indicated that the public reporting burden related to the form had been cleared under OMB No. 9000–0136. That statement has been removed from this edition because OMB Clearance 9000–0136 covers information collections unique to commercial item acquisition. It does not cover the information required by this form. This form is primarily completed by the Government. The contractor/offeror fills in only its name, address, and proposed prices. Those pieces of information do not require clearance in the FAR under

the Paperwork Reduction Act. Office of Management and Budget Number 9000-0136 remains valid for the other information collection requirements related to the acquisition of commercial items.

List of Subjects in 48 CFR Parts 1 and 53

Government procurement.

Dated: March 6, 2002.

Al Matera,

Director, Acquisition Policy Division.

Therefore, DoD, GSA, and NASA amend 48 CFR parts 1 and 53 as set forth below:

1. The authority citation for 48 CFR parts 1 and 53 continues to read as follows:

Authority: 40 U.S.C. 486(c); 10 U.S.C. chapter 137; and 42 U.S.C. 2473(c).

PART 1—FEDERAL ACQUISITION REGULATIONS SYSTEM

1.106 [Amended]

2. Amend section 1.106 in the table by removing the FAR segment ''SF 1449'' and its corresponding OMB Control Number ''9000–0136''.

PART 53—FORMS

53.212 [Amended]

3. Amend section 53.212 by removing ''(*OCT 1995*)'' and adding ''(Rev. 4/02)'' in its place.

53.213 [Amended]

4. Amend section 53.213 in paragraph (a) and the introductory text of paragraph (f) by removing ''(*10/95 Ed.*)'' and adding ''(Rev. *4/02*)'' in its place.

5. Revise section 53.301–1449 to read as follows.

53.301–1449 Solicitation/Contract/Order for Commercial Items.

BILLING CODE 6820–EP–P

SOLICITATION/CONTRACT/ORDER FOR COMMERCIAL ITEMS
OFFEROR TO COMPLETE BLOCKS 12, 17, 23, 24, & 30

1. REQUISITION NUMBER | PAGE 1 OF

2. CONTRACT NO. | 3. AWARD/EFFECTIVE DATE | 4. ORDER NUMBER | 5. SOLICITATION NUMBER | 6. SOLICITATION ISSUE DATE

7. FOR SOLICITATION INFORMATION CALL: | a. NAME | b. TELEPHONE NUMBER *(No collect calls)* | 8. OFFER DUE DATE/ LOCAL TIME

9. ISSUED BY | CODE

10. THIS ACQUISITON IS
- ☐ UNRESTRICTED
- ☐ SET ASIDE: % FOR
  - ☐ SMALL BUSINESS
  - ☐ HUBZONE SMALL BUSINESS
- ☐ 8(A)

NAICS:
SIZE STANDARD:

11. DELIVERY FOR FOB DESTINATION UNLESS BLOCK IS MARKED
☐ SEE SCHEDULE

12. DISCOUNT TERMS

☐ 13a. THIS CONTRACT IS A RATED ORDER UNDER DPAS (15 CFR 700)

13b. RATING

14. METHOD OF SOLICITATION
☐ RFQ ☐ IFB ☐ RFP

15. DELIVER TO | CODE

16. ADMINISTERED BY | CODE

17a. CONTRACTOR/ OFFEROR | CODE | FACILITY CODE

TELEPHONE NO.

18a. PAYMENT WILL BE MADE BY | CODE

☐ 17b. CHECK IF REMITTANCE IS DIFFERENT AND PUT SUCH ADDRESS IN OFFER

18b. SUBMIT INVOICES TO ADDRESS SHOWN IN BLOCK 18a UNLESS BLOCK BELOW IS CHECKED ☐ SEE ADDENDUM

19. ITEM NO.	20. SCHEDULE OF SUPPLIES/SERVICES	21. QUANTITY	22. UNIT	23. UNIT PRICE	24. AMOUNT
	(Use Reverse and/or Attach Additional Sheets as Necessary)				

25. ACCOUNTING AND APPROPRIATION DATA

26. TOTAL AWARD AMOUNT *(For Govt. Use Only)*

☐ 27a. SOLICITATION INCORPORATES BY REFERENCE FAR 52.212-1, 52.212-4. FAR 52.212-3 AND 52.212-5 ARE ATTACHED. ADDENDA ☐ ARE ☐ ARE NOT ATTACHED

☐ 27b. CONTRACT/PURCHASE ORDER INCORPORATES BY REFERENCE FAR 52.212-4. FAR 52.212-5 IS ATTACHED ADDENDA ☐ ARE ☐ ARE NOT ATTACHED

☐ 28. CONTRACTOR IS REQUIRED TO SIGN THIS DOCUMENT AND RETURN _____ COPIES TO ISSUING OFFICE. CONTRACTOR AGREES TO FURNISH AND DELIVER ALL ITEMS SET FORTH OR OTHERWISE IDENTIFIED ABOVE AND ON ANY ADDITIONAL SHEETS SUBJECT TO THE TERMS AND CONDITIONS SPECIFIED HEREIN.

☐ 29. AWARD OF CONTRACT: REF. _____ OFFER DATED _____. YOUR OFFER ON SOLICITATION (BLOCK 5), INCLUDING ANY ADDITIONS OR CHANGES WHICH ARE SET FORTH HEREIN, IS ACCEPTED AS TO ITEMS:

30a. SIGNATURE OF OFFEROR/CONTRACTOR

31a. UNITED STATES OF AMERICA *(SIGNATURE OF CONTRACTING OFFICER)*

30b. NAME AND TITLE OF SIGNER *(Type or print)* | 30c. DATE SIGNED

31b. NAME OF CONTRACTING OFFICER *(Type or print)* | 31c. DATE SIGNED

AUTHORIZED FOR LOCAL REPRODUCTION
PREVIOUS EDITION IS NOT USABLE

STANDARD FORM 1449 (REV. 4/2002)
Prescribed by GSA - FAR (48 CFR) 53.212

19. ITEM NO.	20. SCHEDULE OF SUPPLIES/SERVICES	21. QUANTITY	22. UNIT	23. UNIT PRICE	24. AMOUNT

32a. QUANTITY IN COLUMN 21 HAS BEEN

☐ RECEIVED ☐ INSPECTED ☐ ACCEPTED, AND CONFORMS TO THE CONTRACT, EXCEPT AS NOTED: _____

32b. SIGNATURE OF AUTHORIZED GOVERNMENT REPRESENTATIVE	32c. DATE	32d. PRINTED NAME AND TITLE OF AUTHORIZED GOVERNMENT REPRESENTATIVE

32e. MAILING ADDRESS OF AUTHORIZED GOVERNMENT REPRESENTATIVE	32f. TELPHONE NUMBER OF AUTHORZED GOVERNMENT REPRESENTATIVE
	32g. E-MAIL OF AUTHORIZED GOVERNMENT REPRESENTATIVE

33. SHIP NUMBER	34. VOUCHER NUMBER	35. AMOUNT VERIFIED CORRECT FOR	36. PAYMENT	37. CHECK NUMBER
PARTIAL FINAL			☐ COMPLETE ☐ PARTIAL ☐ FINAL	
38. S/R ACCOUNT NUMBER	39. S/R VOUCHER NUMBER	40. PAID BY		

41a. I CERTIFY THIS ACCOUNT IS CORRECT AND PROPER FOR PAYMENT		42a. RECEIVED BY *(Print)*	
41b. SIGNATURE AND TITLE OF CERTIFYING OFFICER	41c. DATE	42b. RECEIVED AT *(Location)*	
		42c. DATE REC'D *(YY/MM/DD)*	42d. TOTAL CONTAINERS

STANDARD FORM 1449 (REV. 4/2002) **BACK**

[FR Doc. 02–5820 Filed 3–19–02; 8:45 am]
BILLING CODE 6820–EP–C

DEPARTMENT OF DEFENSE

GENERAL SERVICES ADMINISTRATION

NATIONAL AERONAUTICS AND SPACE ADMINISTRATION

48 CFR Parts 1, 5, 6, 8, 17, 19, 32, and 52

[FAC 2001–06; FAR Case 2000–402; Item II]

RIN 9000–AI76

Federal Acquisition Regulation; Definitions for ''Contract Action'' and ''Contracting Action''

AGENCIES: Department of Defense (DoD), General Services Administration (GSA), and National Aeronautics and Space Administration (NASA).

ACTION: Final rule.

SUMMARY: The Civilian Agency Acquisition Council and the Defense Acquisition Regulations Council (Councils) have agreed to amend the Federal Acquisition Regulation (FAR) to provide for consistent use of the term ''contract action'' and to make other editorial changes to clarify the text.

DATES: *Effective Date:* April 4, 2002.

FOR FURTHER INFORMATION CONTACT: The FAR Secretariat, Room 4035, GS Building, Washington, DC 20405, (202) 501–4755, for information pertaining to status or publication schedules. For clarification of content, contact Ms. Victoria Moss, Procurement Analyst, at (202) 501–4764. Please cite FAC 2001–06, FAR case 2000–402.

SUPPLEMENTARY INFORMATION:

A. Background

This rule amends the FAR to provide for consistent use of the term ''contract action.'' The rule changes the term ''contracting action'' to ''contract action'' throughout the FAR and makes other editorial changes to clarify the text.

DoD, GSA, and NASA published a proposed rule in the **Federal Register** on May 31, 2000 (65 FR 34894). One respondent submitted comments on the proposed rule. Based on those comments, the rule was changed to provide for more consistent use of the term ''contract action'' and to place definitions in the proper FAR sections.

This is not a significant regulatory action and, therefore, was not subject to review under section 6(b) of Executive Order 12866, Regulatory Planning and Review, dated September 30, 1993. This rule is not a major rule under 5 U.S.C. 804.

B. Regulatory Flexibility Act

The Department of Defense, the General Services Administration, and the National Aeronautics and Space Administration certify that this final rule will not have a significant economic impact on a substantial number of small entities within the meaning of the Regulatory Flexibility Act, 5 U.S.C. 601, *et seq.*, because we are not substantively changing procedures for award and administration of contracts. We did not receive any comments regarding this determination as a result of publication of the proposed rule in the **Federal Register** on May 31, 2000 (65 FR 34894).

C. Paperwork Reduction Act

The Paperwork Reduction Act does not apply because the changes to the FAR do not impose information collection requirements that require Office of Management and Budget approval under 44 U.S.C. 3501, *et seq.*

List of Subjects in 48 CFR Parts 1, 5, 6, 8, 17, 19, 32, and 52

Government procurement.

Dated: March 6, 2002.

Al Matera,

Director, Acquisition Policy Division.

Therefore, DoD, GSA, and NASA amend 48 CFR parts 1, 5, 6, 8, 17, 19, 32, and 52 as set forth below:

1. The authority citation for 48 CFR parts 1, 5, 6, 8, 17, 19, 32, and 52 continues to read as follows:

Authority: 40 U.S.C. 486(c); 10 U.S.C. chapter 137; and 42 U.S.C. 2473(c).

PART 1—FEDERAL ACQUISITION REGULATIONS SYSTEM

2. Revise section 1.403 to read as follows:

1.403 Individual deviations.

Individual deviations affect only one contract action, and, unless 1.405(e) is applicable, may be authorized by the agency head. The contracting officer must document the justification and agency approval in the contract file.

3. Revise the introductory paragraph of section 1.404 to read as follows:

1.404 Class deviations.

Class deviations affect more than one contract action. When an agency knows that it will require a class deviation on a permanent basis, it should propose a FAR revision, if appropriate. Civilian agencies, other than NASA, must furnish a copy of each approved class deviation to the FAR Secretariat.

* * * * *

1.701 [Amended]

4. Amend the first sentence of section 1.701 by removing the word ''contracting'' and adding ''contract'' in its place.

1.703 [Amended]

5. Amend section 1.703 in paragraph (a) by removing the word ''contracting'' each time it appears (3 times) and adding ''contract'' in its place.

6. Amend section 1.705 by revising paragraph (b) to read as follows:

1.705 Supersession and modification.

* * * * *

(b) The contracting officer need not cancel the solicitation if the D&F, as modified, supports the contract action.

PART 5—PUBLICIZING CONTRACT ACTIONS

7. Revise section 5.001 to read as follows:

5.001 Definition.

Contract action, as used in this part, means an action resulting in a contract, as defined in subpart 2.1, including actions for additional supplies or services outside the existing contract scope, but not including actions that are within the scope and under the terms of the existing contract, such as contract modifications issued pursuant to the Changes clause, or funding and other administrative changes.

PART 6—COMPETITION REQUIREMENTS

6.502 [Amended]

8. Amend section 6.502 in paragraph (b)(1)(iv) by removing the word ''contracting'' and adding ''contract'' in its place.

PART 8—REQUIRED SOURCES OF SUPPLIES AND SERVICES

9. Revise section 8.102 to read as follows:

8.102 Policy.

When practicable, agencies must use excess personal property as the first source of supply for agency and cost-reimbursement contractor requirements. Agency personnel must make positive efforts to satisfy agency requirements by obtaining and using excess personal property (including that suitable for adaptation or substitution) before initiating a contract action.

PART 17—SPECIAL CONTRACTING METHODS

17.104 [Amended]

10. Amend section 17.104 in the second sentence of paragraph (b) by removing the words ''contracting action'' and adding ''contract'' in their place.

11. Amend section 17.503 by revising the introductory text of paragraph (b) to read as follows:

17.503 Determinations and findings requirements.

* * * * *

(b) If the Economy Act order requires contract action by the servicing agency, the D&F must also include a statement that at least one of the following circumstances applies:

* * * * *

PART 19—SMALL BUSINESS PROGRAMS

19.302 [Amended]

12. Amend section 19.302 in the first sentence of paragraph (h)(4) by removing the words ''contracting action'' and adding ''contract action'' in their place.

13. Amend section 19.505 by revising paragraph (c) to read as follows:

19.505 Rejecting Small Business Administration recommendations.

* * * * *

(c) If the head of the contracting activity agrees that the contracting officer's rejection was appropriate—

(1) Within 1 working day, the SBA procurement center representative may request the contracting officer to suspend action on the acquisition until the SBA Administrator appeals to the agency head (see paragraph (f) of this section); and

(2) The SBA must be allowed 15 working days after making such a written request, within which the Administrator of SBA—

(i) May appeal to the Secretary of the Department concerned; and

(ii) Must notify the contracting officer whether the further appeal has, in fact, been taken. If notification is not received by the contracting officer within the 15-day period, it is deemed that the SBA request to suspend the contract action has been withdrawn and that an appeal to the Secretary was not taken.

* * * * *

PART 32—CONTRACT FINANCING

14. Revise the introductory paragraph of section 32.000 to read as follows:

32.000 Scope of part.

This part prescribes policies and procedures for contract financing and other payment matters. This part addresses—

* * * * *

15. Amend section 32.001 by revising the definition ''Contract action'' to read as follows:

32.001 Definitions.

* * * * *

Contract action means an action resulting in a contract, as defined in subpart 2.1, including actions for additional supplies or services outside the existing contract scope, but not including actions that are within the scope and under the terms of the existing contract, such as contract modifications issued pursuant to the Changes clause, or funding and other administrative changes.

* * * * *

32.703–2 [Amended]

16. Amend section 32.703–2 in the first sentence of the introductory text of paragraph (a) by removing the words ''contracting action'' and adding ''contract action'' in their place; by removing the semicolon after the word ''available'' and adding a comma in its place; and by removing the comma after the word ''provided''.

17. Amend section 32.705–1 by revising paragraph (a) to read as follows:

32.705–1 Clauses for contracting in advance of funds.

(a) Insert the clause at 52.232–18, Availability of Funds, in solicitations and contracts if the contract will be chargeable to funds of the new fiscal year and the contract action will be initiated before the funds are available.

* * * * *

PART 52—SOLICITATION PROVISIONS AND CONTRACT CLAUSES

18. Amend section 52.232–18 by revising the introductory text to read as follows:

52.232–18 Availability of Funds.

As prescribed in 32.705–1(a), insert the following clause:

* * * * *

[FR Doc. 02–5821 Filed 3–19–02; 8:45 am]

BILLING CODE 6820–EP–P

DEPARTMENT OF DEFENSE

GENERAL SERVICES ADMINISTRATION

NATIONAL AERONAUTICS AND SPACE ADMINISTRATION

48 CFR Parts 2, 3, 14, 15, 28, 35, and 52

[FAC 2001–06; FAR Case 2000–403; Item III]

RIN 9000–AI84

Federal Acquisition Regulation; Definitions for Sealed Bid and Negotiated Procurements

AGENCIES: Department of Defense (DoD), General Services Administration (GSA), and National Aeronautics and Space Administration (NASA).

ACTION: Final rule.

SUMMARY: The Civilian Agency Acquisition Council and the Defense Acquisition Regulations Council (Councils) have agreed to amend the Federal Acquisition Regulation (FAR) to provide consistent definitions for sealed bids and negotiated procurements.

DATES: *Effective Date:* April 4, 2002.

FOR FURTHER INFORMATION CONTACT: The FAR Secretariat, Room 4035, GS Building, Washington, DC 20405, (202) 501–4755, for information pertaining to status or publication schedules. For clarification of content, contact Mr. Ralph De Stefano, Procurement Analyst, at (202) 501–1758. Please cite FAC 2001–06, FAR case 2000–403.

SUPPLEMENTARY INFORMATION:

A. Background

The rule clarifies definitions that are used in the FAR for sealed bid and negotiated procurements. The rule—

- Moves the definitions of ''bid sample'' and ''descriptive literature'' from FAR part 14 to FAR 2.101 because the definitions apply to more than one FAR part;
- Amends those definitions and the definition of ''offer'' in accordance with plain language guidelines;
- Revises applicable provisions in FAR part 52 to conform with the new definitions;
- Adds a new definition for ''solicitation'' at FAR 2.101; and
- Provides definitions for ''bid'' and ''bidder'' in FAR part 28 because, as used in that part, the terms address sealed bid and negotiated acquisitions.

We also reviewed every instance where the terms ''offeror,'' ''prospective offeror,'' and ''potential offeror'' are used in the FAR. The rule clarifies

terminology used in FAR 15.201(f), 15.609(e), and 35.007(g). Where we mean an entity that is actively seeking a contract, we use the term ''prospective offeror.'' However, those cites describe processes that are set up to ensure competition. Therefore, any interested party is able to participate, including parties that the Government has not yet identified. Therefore, the rule uses the more general term ''potential offeror.''

DoD, GSA, and NASA published a proposed rule in the **Federal Register** at 65 FR 42852, July 11, 2000. Four respondents submitted comments on the proposed rule. The Councils considered all comments in the development of the final rule. A summary of the substantive comments is provided:

• *Comment:* Under 52.214–20, paragraph (c), change the second sentence to read ''The Government will reject the bid when the sample fails'' for clarity.

Response: Accepted.

• *Comment:* Under FAR 2.101, the definition of an ''offer'' does not include a ''quotation.'' The definition of a ''solicitation'' includes a ''quotation.'' Both definitions should be consistent.

Response: Not accepted. The definition of ''offer'' is not all-inclusive. It does not include ''quotations.'' A quotation is not an offer and, consequently, cannot be accepted by the Government to form a binding contract. See FAR 13.004.

• *Comment:* The proposed language under FAR 14.202–5(e) should cite FAR 14.202–4(f) in lieu of (g).

Response: Accepted.

This is not a significant regulatory action and, therefore, was not subject to review under section 6(b) of Executive Order 12866, Regulatory Planning and Review, dated September 30, 1993. This rule is not a major rule under 5 U.S.C. 804.

B. Regulatory Flexibility Act

The Department of Defense, the General Services Administration, and the National Aeronautics and Space Administration certify that this final rule will not have a significant economic impact on a substantial number of small entities within the meaning of the Regulatory Flexibility Act, 5 U.S.C. 601, *et seq.*, because, while we have made changes for clarity and consistency, we have not substantively changed procedures for award and administration of contracts.

C. Paperwork Reduction Act

The Paperwork Reduction Act does not apply because the changes to the FAR do not impose information collection requirements that require Office of Management and Budget approval under 44 U.S.C. 3501, *et seq.*

List of Subjects in 48 CFR Parts 2, 3, 14, 15, 28, 35, and 52

Government procurement.

Dated: March 6, 2002.

Al Matera,

Director, Acquisition Policy Division.

Therefore, DoD, GSA, and NASA amend 48 CFR Parts 2, 3, 14, 15, 28, 35, and 52 as set forth below:

1. The authority citation for 48 CFR Parts 2, 3, 14, 15, 28, 35, and 52 continues to read as follows:

Authority: 40 U.S.C. 486(c); 10 U.S.C. chapter 137; and 42 U.S.C. 2473(c).

PART 2—DEFINITIONS OF WORDS AND TERMS

2. Amend section 2.101 by adding, in alphabetical order, the definitions ''Bid sample'' and ''Descriptive literature''; revising the definition ''Offer''; and by adding the definition ''Solicitation'' to read as follows:

2.101 Definitions.

* * * * *

Bid sample means a product sample required to be submitted by an offeror to show characteristics of the offered products that cannot adequately be described by specifications, purchase descriptions, or the solicitation (*e.g.,* balance, facility of use, or pattern).

* * * * *

Descriptive literature means information provided by an offeror, such as cuts, illustrations, drawings, and brochures, that shows a product's characteristics or construction of a product or explains its operation. The term includes only that information needed to evaluate the acceptability of the product and excludes other information for operating or maintaining the product.

* * * * *

Offer means a response to a solicitation that, if accepted, would bind the offeror to perform the resultant contract. Responses to invitations for bids (sealed bidding) are offers called ''bids'' or ''sealed bids''; responses to requests for proposals (negotiation) are offers called ''proposals''; however, responses to requests for quotations (simplified acquisition) are ''quotations'', not offers. For unsolicited proposals, see subpart 15.6.

* * * * *

Solicitation means any request to submit offers or quotations to the Government. Solicitations under sealed bid procedures are called ''invitations for bids.'' *Solicitations* under negotiated procedures are called ''requests for proposals.'' Solicitations under simplified acquisition procedures may require submission of either a quotation or an offer.

* * * * *

PART 3—IMPROPER BUSINESS PRACTICES AND PERSONAL CONFLICTS OF INTEREST

3. Amend section 3.302 by revising the definition ''Line item'' to read as follows:

3.302 Definitions.

* * * * *

Line item means an item of supply or service, specified in a solicitation, that the offeror must separately price.

PART 14—SEALED BIDDING

4. Amend section 14.201–6 by—

a. Revising paragraph (a);

b. Removing paragraphs (b)(1) and (b)(2) and redesignating paragraphs (b)(3) and (b)(4) as (b)(1) and (b)(2);

c. Revising the introductory text of paragraph (o)(2) and paragraph (o)(3); and

d. Removing from paragraph (p)(3) ''14.202–5(e)(2)'' and adding ''14.202–5(d)(2)'' in its place. The revised text reads as follows:

14.201–6 Solicitation provisions.

(a) The provisions prescribed in this subsection apply to preparation and submission of bids in general. See other FAR parts for provisions and clauses related to specific acquisition requirements.

* * * * *

(o)(1) * * *

(2) If it appears that the conditions in 14.202–4(e)(1) will apply and the contracting officer anticipates granting waivers and—

* * * * *

(3) See 14.202–4(e)(2) regarding waiving the requirement for all bidders.

* * * * *

14.202–4 [Amended]

5. Amend section 14.202–4 by removing paragraph (a); redesignating paragraphs (b) through (h) as (a) through (g), respectively; and by removing the word ''of'' from the heading of newly designated paragraph (g).

6. Revise section 14.202–5 to read as follows:

14.202–5 Descriptive literature.

(a) *Policy.* Contracting officers must not require bidders to furnish descriptive literature unless it is needed before award to determine whether the

products offered meet the specification and to establish exactly what the bidder proposes to furnish.

(b) *Justification.* The contracting officer must document in the contract file the reasons why product acceptability cannot be determined without the submission of descriptive literature, except when the contract specifications require submission.

(c) *Requirements of invitation for bids.* (1) The invitation must clearly state—

(i) What descriptive literature the bidders must furnish;

(ii) The purpose for requiring the literature;

(iii) The extent of its consideration in the evaluation of bids; and

(iv) The rules that will apply if a bidder fails to furnish the literature before bid opening or if the literature provided does not comply with the requirements of the invitation.

(2) If bidders must furnish descriptive literature, see 14.201–6(p).

(d) *Waiver of requirement for descriptive literature.* (1) The contracting officer may waive the requirement for descriptive literature if—

(i) The bidder states in the bid that the product being offered is the same as a product previously or currently being furnished to the contracting activity; and

(ii) The contracting officer determines that the product offered by the bidder complies with the specification requirements of the current invitation for bids. When the contracting officer waives the requirement, see 14.201–6(p)(2).

(2) When descriptive literature is not necessary and a waiver of literature requirements of a specification has been authorized, the contracting officer must include a statement in the invitation that, despite the requirements of the specifications, descriptive literature will not be required.

(3) If the solicitation provides for a waiver, a bidder may submit a bid on the basis of either the descriptive literature furnished with the bid or a previously furnished product. If the bid is submitted on one basis, the bidder may not have it considered on the other basis after bids are opened.

(e) *Unsolicited descriptive literature.* If descriptive literature is furnished when it is not required by the invitation for bids, the procedures set forth in 14.202–4(f) must be followed.

14.404–4 [Amended]

7. Amend section 14.404–4 in the first sentence by removing ''14.202–5(a)'' and adding ''2.101'' in its place; and in the last sentence by removing ''14.202–5(f)'' and adding ''14.202–5(e)'' in its place.

PART 15—CONTRACTING BY NEGOTIATION

8. Amend section 15.201 by removing the undesignated paragraph at the end of the section and revising paragraph (f) to read as follows:

15.201 Exchanges with industry before receipt of proposals.

* * * * *

(f) General information about agency mission needs and future requirements may be disclosed at any time. After release of the solicitation, the contracting officer must be the focal point of any exchange with potential offerors. When specific information about a proposed acquisition that would be necessary for the preparation of proposals is disclosed to one or more potential offerors, that information must be made available to the public as soon as practicable, but no later than the next general release of information, in order to avoid creating an unfair competitive advantage. Information provided to a potential offeror in response to its request must not be disclosed if doing so would reveal the potential offeror's confidential business strategy, and is protected under 3.104 or subpart 24.2. When conducting a presolicitation or preproposal conference, materials distributed at the conference should be made available to all potential offerors, upon request.

9. Amend section 15.609 by revising paragraph (e) to read as follows:

15.609 Limited use of data.

* * * * *

(e) Use the notice in paragraph (d) of this section solely as a manner of handling unsolicited proposals that will be compatible with this subpart. However, do not use this notice to justify withholding of a record, or to improperly deny the public access to a record, where an obligation is imposed by the Freedom of Information Act (5 U.S.C. 552). An offeror should identify trade secrets, commercial or financial information, and privileged or confidential information to the Government (see paragraph (a) of this section).

* * * * *

PART 28—BONDS AND INSURANCE

10. Revise section 28.000 to read as follows:

28.000 Scope of part.

This part prescribes requirements for obtaining financial protection against losses under contracts that result from the use of the sealed bid or negotiated methods. It covers bid guarantees, bonds, alternative payment protections, security for bonds, and insurance.

11. Amend section 28.001 by adding, in alphabetical order, the definitions ''Bid'' and ''Bidder'' to read as follows:

28.001 Definitions.

* * * * *

Bid means any response to a solicitation, including a proposal under a negotiated acquisition. See the definition of ''offer'' at 2.101.

* * * * *

Bidder means any entity that is responding or has responded to a solicitation, including an offeror under a negotiated acquisition.

* * * * *

PART 35—RESEARCH AND DEVELOPMENT CONTRACTING

12. Amend section 35.007 by revising paragraph (g) to read as follows:

35.007 Solicitations.

* * * * *

(g) The contracting officer should ensure that potential offerors fully understand the details of the work, especially the Government interpretation of the work statement. If the effort is complex, the contracting officer should provide potential offerors an opportunity to comment on the details of the requirements as contained in the work statement, the contract Schedule, and any related specifications. This may be done at a preproposal conference (see 15.201).

* * * * *

PART 52—SOLICITATION PROVISIONS AND CONTRACT CLAUSES

52.214–1 [Reserved]

13. Remove and reserve section 52.214–1.

52.214–3 [Amended]

14. Amend section 52.214–3 in the prescription by removing ''14.201–6(b)(3)'' and adding ''14.201–6(b)(1)'' in its place.

52.214–4 [Amended]

15. Amend section 52.214–4 in the prescription by removing ''14.201–6(b)(4)'' and adding ''14.201–6(b)(2)'' in its place.

16. Amend section 52.214–20 by revising the introductory paragraph, date of the provision, and paragraphs

(a), (b), and the introductory text of paragraph (c); and by removing from Alternates I and II ''14.202–4(f)(1)'' and adding ''14.202–4(e)(1)'' in its place. The revised text reads as follows:

52.214–20 Bid Samples.

As prescribed in 14.201–6(o)(1), insert the following provision:

Bid Samples (Apr 2002)

(a) *Bid sample* means a product sample required to be submitted by a bidder to show those characteristics of the offered products that cannot adequately be described by specifications, purchase descriptions, or the invitation for bid (*e.g.,* balance, facility of use, or pattern).

(b) Bidders must furnish bid samples as part of the bid. The Government must receive the bid samples by the time specified in the invitation for bids. If the bidder fails to submit samples on time, the Government will reject the bid, except that the Contracting Officer will consider a late sample sent by mail under the Late Submissions, Modifications, and Withdrawals of Bids provision of this solicitation.

(c) The Government will test or evaluate bid samples to determine compliance with all the characteristics listed for examination in this solicitation. The Government will reject the bid when the sample fails to conform to the required characteristics. Products delivered under any resulting contract must conform to—

* * * * *

(End of provision)

* * * * *

17. Revise section 52.214–21 to read as follows:

52.214–21 Descriptive Literature.

As prescribed in 14.201–6(p)(1), insert the following provision:

Descriptive Literature (Apr 2002)

(a) *Descriptive literature,* as used in this provision, means information furnished by a bidder, such as cuts, illustrations, drawings, and brochures, that shows a product's characteristics or construction or explains its operation. The term includes only that information required to evaluate the acceptability of the product and excludes other information for operating or maintaining the product.

(b) Descriptive literature is required to establish, for the purpose of evaluation and award, details of the product offered that are specified elsewhere in the solicitation and pertain to significant elements such as—

(1) Design;

(2) Materials;

(3) Components;

(4) Performance characteristics; and

(5) Methods of manufacture, assembly, construction, or operation.

(c) Descriptive literature, required elsewhere in this solicitation, shall be—

(1) Identified to show the item(s) of the offer to which it applies; and

(2) Received by the time specified in this solicitation.

(d) If the bidder fails to submit descriptive literature on time, the Government will reject the bid, except that late descriptive literature sent by mail may be considered under the Late Submissions, Modifications, and Withdrawals of Bids provision of this solicitation.

(e) If the descriptive literature fails to show that the product offered conforms to the requirements of the solicitation, the Government will reject the bid.

(End of provision)

Alternate I (Apr 2002). As prescribed in 14.201–6(p)(2), add the following paragraphs (f) and (g) to the basic provision:

(f) The Contracting Officer may waive the requirement for furnishing descriptive literature if the offeror has supplied a product that is the same as that required by this solicitation under a prior contract. A bidder that requests a waiver of this requirement shall provide the following information:

Prior contract number _____

Date of prior contract _____

Contract line item number of product supplied _____

Name and address of Government activity to which delivery was made _____

Date of final delivery product supplied _____

(g) Bidders shall submit bids on the basis of required descriptive literature or on the basis of a previously supplied product under paragraph (f) of this provision. A bidder submitting a bid on one of these two bases may not elect to have its bid considered on the alternative basis after the time specified for receipt of bids. The Government will disregard a bidder's request for a waiver under paragraph (f) if that bidder has submitted the descriptive literature requested under this solicitation.

[FR Doc. 02–5822 Filed 3–19–02; 8:45 am]

BILLING CODE 6820–EP–P

DEPARTMENT OF DEFENSE

GENERAL SERVICES ADMINISTRATION

NATIONAL AERONAUTICS AND SPACE ADMINISTRATION

48 CFR Parts 2, 3, 4, 9, 15, and 52

[FAC 2001–06; FAR Case 1998–024; Item IV]

RIN 9000–AI61

Federal Acquisition Regulation; Procurement Integrity Rewrite

AGENCIES: Department of Defense (DoD), General Services Administration (GSA), and National Aeronautics and Space Administration (NASA).

ACTION: Final rule.

SUMMARY: The Civilian Agency Acquisition Council and the Defense Acquisition Regulations Council (Councils) have agreed on a final rule amending the Federal Acquisition Regulation (FAR) to rewrite procurement integrity coverage in plain language.

DATES: *Effective Date*: April 4, 2002.

FOR FURTHER INFORMATION CONTACT: The FAR Secretariat, Room 4035, GS Building, Washington, DC 20405, (202) 501–4755, for information pertaining to status or publication schedules. For clarification of content, contact Mr. Ralph De Stefano, Procurement Analyst, at (202) 501–1758. Please cite FAC 2001–06, FAR case 1998–024.

SUPPLEMENTARY INFORMATION:

A. Background

Section 27 of the Office of Federal Procurement Policy Act (41 U.S.C. 423) is more commonly referred to as the Procurement Integrity Act (hereinafter referred to as the Act). FAR 3.104 implements prohibitions, restrictions, and other requirements of the Act that are placed on certain agency officials that participate in Federal agency procurements.

Other statutes and regulations also govern the conduct of Government employees. In particular, the Office of Government Ethics regulations provide interpretive guidance on the prohibitions in 18 U.S.C. 207 and 208 that also apply to Government employees that participate in procurement activities during the conduct of a Federal agency procurement. While FAR 3.104 does not implement these other statutes and regulations, it is very important for agency employees to be aware, not only of the prohibitions and restrictions in the Act, but also those contained in other statutes and regulations that deal with the same or related prohibited conduct. Criminal and administrative penalties can result if an employee violates the restrictions or otherwise engages in prohibited conduct.

It became apparent that we could improve FAR 3.104 by reorganizing and simplifying the text. Moreover, we clarify 3.104 to alert agency officials that even if their participation does not meet the definition in FAR 3.104 of participating personally and substantially, they are precluded from participating in a Federal agency procurement if they engage in certain conduct otherwise prohibited by other statutes and regulations. We added this guidance in FAR 3.104–2(b), 3.104–3(c), and 3.104–5(a) to alert these agency officials that they should seek advice from agency ethics officials before engaging in certain activities that could have serious consequences, including

criminal prosecution. These revisions to FAR 3.104 do not change either the requirements of the Act or change, in any manner, who is covered by, or the activities covered in, Office of Government Ethics regulations interpreting conflict of interest statutes.

To avoid possible violations of 18 U.S.C. 208, agency employees need to be aware that while their participation in a Federal agency procurement may not be considered ''participating personally and substantially in a Federal agency procurement'' for purposes of certain requirements in the Act, nevertheless, there will be instances where the employee will be considered to be participating personally and substantially for purposes of 18 U.S.C. 208. We have added these revisions to FAR 3.104 to alert agency officials that, while participating in a Federal agency procurement, they must be aware of and comply with the applicable disqualification requirements of 5 CFR 2635.604 and 2635.606.

These revisions also may assist agency ethics officials in advising agency officials participating in a Federal agency procurement. Certain conduct by an agency official during the conduct of a Federal agency procurement requires the official's disqualification from participation irrespective of whether or not the official's participation meets the definition of participating personally and substantially for purposes of the Act.

A proposed rule was published in the **Federal Register** at 65 FR 16758, March 29, 2000. Seven sources submitted comments in response to the proposed rule. All comments were considered in the development of the final rule. A summary of the substantive comments is provided.

• *Comment:* Additional clarification should be added that merely signing appointment letters for source selection evaluation panels, boards is not ''participating personally and substantially participation in a Federal agency procurement.''

Response: Not accepted. The definition of ''participating personally and substantially in a Federal agency procurement'' is already quite detailed and more clarification is unnecessary.

• *Comment:* The standards identified in FAR 3.104–3(d) concerning prohibition on a former official's acceptance of compensation from a contractor that has been awarded a competitive or sole source contract, as an employee, officer, director, or consultant of the contractor should be made more restrictive.

Response: Not accepted. The regulatory coverage tracks the statutory language.

• *Comment:* A definition of ''must'' should be added.

Response: The definition of ''must'' was added to FAR 2.101 under another final rule and is currently in the FAR.

• *Comment:* Does the definition of ''source selection information'' include quotations in FAR Subpart 13.5, Test Program for Certain Commercial Items, that are over the simplified acquisition threshold, normally over $100,000.

Response: No. Bids and proposals are addressed in the Act. Bids and proposals are terms of art to distinguish methods of contracting (bids under sealed bidding and proposals under negotiation). A quotation is not a bid or a proposal.

• *Comment:* The references to ''procurement'' in the rule should be changed to read ''acquisition.''

Response: Not accepted. The Act and its implementation in FAR 3.104 apply only to a ''Federal agency procurement.'' The term ''Federal agency procurement'' is defined in both the Act and FAR 3.104. The definition is different from the definition of ''acquisition'' in FAR 2.101.

• *Comment:* Head of the contracting activity delegation restrictions in FAR 3.104–7(g) should be relaxed.

Response: Not accepted. The issues being addressed are very significant, *i.e.,* violations or possible violations of the Act; therefore, relaxation of the restriction is not appropriate.

• *Comment:* Informing acquisition employees that some post-employment restrictions are not tied to ''personal and substantial participation'' should be added in the rule.

Response: Accepted. See discussion under Supplementary Information, Background, above.

• *Comment:* Suggest retaining current FAR definition at FAR 3.104–1, ''Participating personally and substantially in a Federal agency procurement,'' as applied to the OMB Circular A–76, paragraph (4). The proposed rule contains an expanded definition.

Response: Accepted. The 1996 amendments to the Act limit the application of the post-employment restrictions to designated positions; therefore, the participation of most personnel in these activities would not place them at risk of losing any right of first refusal. See paragraph (4)(iv) of FAR 3.104–1, ''Participating substantially''.

• *Comment:* Clarify what constitutes a ''contact'' under the Act. Response: An explanation of ''contact'' was added to the rule at FAR 3.104–3(c)(2). The addition gives the suggested guidance.

• *Comment:* A clarification that employment contacts through agents are subject to disqualification needs to be added at FAR 3.104–5(a).

Response: Accepted. The added language makes a clear statement that an employment contact through agents is subject to disqualification under this final rule.

• *Comment:* The number of individuals required to receive the disqualification notice directly from the agency official disqualifying herself/himself should be reduced.

Response: Partially accepted. The requirement for a notice of disqualification to the head of the contracting activity was deleted, but the requirements for notice to the contracting officer, source selection official, and immediate supervisor were retained. In an attempt to reduce the number of officials required to be notified, it was determined that the head of the contracting activity could be deleted. The Act places an affirmative responsibility on the agency official to disqualify herself/himself.

• *Comment:* Clarify that satisfying the requirement of 18 U.S.C 208 does not automatically authorize the disqualified official to resume participation in the procurement.

Response: The wording of the first sentence of 3.104–5(c) was revised to clarify that the conditions for resumption of participation in 3.104–3(c)(1)(ii) are statutorily mandated and that reinstatement is not necessarily automatic after those conditions have been met.

This is not a significant regulatory action, and therefore, was not subject to review under Section 6(b) of Executive Order 12866, Regulatory Planning and Review, dated September 30, 1993. This rule is not a major rule under 5 U.S.C. 804.

B. Regulatory Flexibility Act

The Department of Defense, the General Services Administration, and the National Aeronautics and Space Administration certify that this final rule will not have a significant economic impact on a substantial number of small entities within the meaning of the Regulatory Flexibility Act, 5 U.S.C. 601, *et seq.*, because the clarification only applies to individuals that are Government officials.

C. Paperwork Reduction Act

The Paperwork Reduction Act does not apply because the changes to the FAR do not impose information collection requirements that require the

approval of the Office of Management and Budget under 44 U.S.C. 3501, *et seq.*

List of Subjects in 48 CFR Parts 2, 3, 4, 9, 15, and 52

Government procurement.

Dated: March 6, 2002.

Al Matera,

Director, Acquisition Policy Division.

Therefore, DoD, GSA, and NASA amend 48 CFR parts 2, 3, 4, 9, 15, and 52 as set forth below:

1. The authority citation for 48 CFR parts 2, 3, 4, 9, 15, and 52 continues to read as follows:

Authority: 40 U.S.C. 486(c); 10 U.S.C. chapter 137; and 42 U.S.C. 2473(c).

PART 2—DEFINITIONS OF WORDS AND TERMS

2. Amend section 2.101 by adding, in alphabetical order, the definitions ''Offeror'' and ''Source selection information'' to read as follows:

2.101 Definitions.

* * * * *

Offeror means offeror or bidder.

* * * * *

Source selection information means any of the following information that is prepared for use by an agency for the purpose of evaluating a bid or proposal to enter into an agency procurement contract, if that information has not been previously made available to the public or disclosed publicly:

(1) Bid prices submitted in response to an agency invitation for bids, or lists of those bid prices before bid opening.

(2) Proposed costs or prices submitted in response to an agency solicitation, or lists of those proposed costs or prices.

(3) Source selection plans.

(4) Technical evaluation plans.

(5) Technical evaluations of proposals.

(6) Cost or price evaluations of proposals.

(7) Competitive range determinations that identify proposals that have a reasonable chance of being selected for award of a contract.

(8) Rankings of bids, proposals, or competitors.

(9) Reports and evaluations of source selection panels, boards, or advisory councils.

(10) Other information marked as ''Source Selection Information—See FAR 2.101 and 3.104'' based on a case-by-case determination by the head of the agency or the contracting officer, that its disclosure would jeopardize the integrity or successful completion of the Federal agency procurement to which the information relates.

* * * * *

PART 3—IMPROPER BUSINESS PRACTICES AND PERSONAL CONFLICTS OF INTEREST

3. Remove sections 3.104–10 and 3.104–11 and revise sections 3.104 through 3.104–9 to read as follows:

3.104 Procurement integrity.

3.104–1 Definitions.

As used in this section—

Agency ethics official means the designated agency ethics official described in 5 CFR 2638.201 or other designated person, including—

(1) Deputy ethics officials described in 5 CFR 2638.204, to whom authority under 3.104–6 has been delegated by the designated agency ethics official; and

(2) Alternate designated agency ethics officials described in 5 CFR 2638.202(b).

Compensation means wages, salaries, honoraria, commissions, professional fees, and any other form of compensation, provided directly or indirectly for services rendered. Compensation is indirectly provided if it is paid to an entity other than the individual, specifically in exchange for services provided by the individual.

Contractor bid or proposal information means any of the following information submitted to a Federal agency as part of or in connection with a bid or proposal to enter into a Federal agency procurement contract, if that information has not been previously made available to the public or disclosed publicly:

(1) Cost or pricing data (as defined by 10 U.S.C. 2306a(h)) with respect to procurements subject to that section, and section 304A(h) of the Federal Property and Administrative Services Act of 1949 (41 U.S.C. 254b(h)), with respect to procurements subject to that section.

(2) Indirect costs and direct labor rates.

(3) Proprietary information about manufacturing processes, operations, or techniques marked by the contractor in accordance with applicable law or regulation.

(4) Information marked by the contractor as ''contractor bid or proposal information'' in accordance with applicable law or regulation.

(5) Information marked in accordance with 52.215–1(e).

Decision to award a subcontract or modification of subcontract means a decision to designate award to a particular source.

Federal agency procurement means the acquisition (by using competitive procedures and awarding a contract) of goods or services (including construction) from non-Federal sources by a Federal agency using appropriated funds. For broad agency announcements and small business innovative research programs, each proposal received by an agency constitutes a separate procurement for purposes of the Act.

In excess of $10,000,000 means—

(1) The value, or estimated value, at the time of award, of the contract, including all options;

(2) The total estimated value at the time of award of all orders under an indefinite-delivery, indefinite-quantity, or requirements contract;

(3) Any multiple award schedule contract, unless the contracting officer documents a lower estimate;

(4) The value of a delivery order, task order, or an order under a Basic Ordering Agreement;

(5) The amount paid or to be paid in settlement of a claim; or

(6) The estimated monetary value of negotiated overhead or other rates when applied to the Government portion of the applicable allocation base.

Official means—

(1) An officer, as defined in 5 U.S.C. 2104;

(2) An employee, as defined in 5 U.S.C. 2105;

(3) A member of the uniformed services, as defined in 5 U.S.C. 2101(3); or

(4) A special Government employee, as defined in 18 U.S.C. 202.

Participating personally and substantially in a Federal agency procurement means—

(1) Active and significant involvement of an official in any of the following activities directly related to that procurement:

(i) Drafting, reviewing, or approving the specification or statement of work for the procurement.

(ii) Preparing or developing the solicitation.

(iii) Evaluating bids or proposals, or selecting a source.

(iv) Negotiating price or terms and conditions of the contract.

(v) Reviewing and approving the award of the contract.

(2) *Participating personally* means participating directly, and includes the direct and active supervision of a subordinate's participation in the matter.

(3) *Participating substantially* means that the official's involvement is of significance to the matter. Substantial participation requires more than official responsibility, knowledge, perfunctory

involvement, or involvement on an administrative or peripheral issue. Participation may be substantial even though it is not determinative of the outcome of a particular matter. A finding of substantiality should be based not only on the effort devoted to a matter, but on the importance of the effort. While a series of peripheral involvements may be insubstantial, the single act of approving or participating in a critical step may be substantial. However, the review of procurement documents solely to determine compliance with regulatory, administrative, or budgetary procedures, does not constitute substantial participation in a procurement.

(4) Generally, an official will not be considered to have participated personally and substantially in a procurement solely by participating in the following activities:

(i) Agency-level boards, panels, or other advisory committees that review program milestones or evaluate and make recommendations regarding alternative technologies or approaches for satisfying broad agency-level missions or objectives.

(ii) The performance of general, technical, engineering, or scientific effort having broad application not directly associated with a particular procurement, notwithstanding that such general, technical, engineering, or scientific effort subsequently may be incorporated into a particular procurement.

(iii) Clerical functions supporting the conduct of a particular procurement.

(iv) For procurements to be conducted under the procedures of OMB Circular A–76, participation in management studies, preparation of in-house cost estimates, preparation of ''most efficient organization'' analyses, and furnishing of data or technical support to be used by others in the development of performance standards, statements of work, or specifications.

Source selection evaluation board means any board, team, council, or other group that evaluates bids or proposals.

3.104–2 General.

(a) This section implements section 27 of the Office of Federal Procurement Policy Act (the Procurement Integrity Act) (41 U.S.C. 423) referred to as ''the Act''). Agency supplementation of 3.104, including specific definitions to identify individuals who occupy positions specified in 3.104–3(d)(1)(ii), and any clauses required by 3.104 must be approved by the senior procurement executive of the agency, unless a law establishes a higher level of approval for that agency.

(b) Agency officials are reminded that there are other statutes and regulations that deal with the same or related prohibited conduct, for example—

(1) The offer or acceptance of a bribe or gratuity is prohibited by 18 U.S.C. 201 and 10 U.S.C. 2207. The acceptance of a gift, under certain circumstances, is prohibited by 5 U.S.C. 7353 and 5 CFR part 2635;

(2) Contacts with an offeror during the conduct of an acquisition may constitute ''seeking employment,''(see subpart F of 5 CFR part 2636 and 3.104–3(c)(2)). Government officers and employees (employees) are prohibited by 18 U.S.C. 208 and 5 CFR part 2635 from participating personally and substantially in any particular matter that would affect the financial interests of any person with whom the employee is seeking employment. An employee who engages in negotiations or is otherwise seeking employment with an offeror or who has an arrangement concerning future employment with an offeror must comply with the applicable disqualification requirements of 5 CFR 2635.604 and 2635.606. The statutory prohibition in 18 U.S.C. 208 also may require an employee's disqualification from participation in the acquisition even if the employee's duties may not be considered ''participating personally and substantially,'' as this term is defined in 3.104–1;

(3) Post-employment restrictions are covered by 18 U.S.C. 207 and 5 CFR parts 2637 and 2641, that prohibit certain activities by former Government employees, including representation of a contractor before the Government in relation to any contract or other particular matter involving specific parties on which the former employee participated personally and substantially while employed by the Government. Additional restrictions apply to certain senior Government employees and for particular matters under an employee's official responsibility;

(4) Parts 14 and 15 place restrictions on the release of information related to procurements and other contractor information that must be protected under 18 U.S.C. 1905;

(5) Release of information both before and after award (see 3.104–4) may be prohibited by the Privacy Act (5 U.S.C. 552a), the Trade Secrets Act (18 U.S.C. 1905), and other laws; and

(6) Using nonpublic information to further an employee's private interest or that of another and engaging in a financial transaction using nonpublic information are prohibited by 5 CFR 2635.703.

3.104–3 Statutory and related prohibitions, restrictions, and requirements.

(a) *Prohibition on disclosing procurement information (subsection 27(a) of the Act).* (1) A person described in paragraph (a)(2) of this subsection must not, other than as provided by law, knowingly disclose contractor bid or proposal information or source selection information before the award of a Federal agency procurement contract to which the information relates. (See 3.104–4(a).)

(2) Paragraph (a)(1) of this subsection applies to any person who—

(i) Is a present or former official of the United States, or a person who is acting or has acted for or on behalf of, or who is advising or has advised the United States with respect to, a Federal agency procurement; and

(ii) By virtue of that office, employment, or relationship, has or had access to contractor bid or proposal information or source selection information.

(b) *Prohibition on obtaining procurement information (subsection 27(b) of the Act).* A person must not, other than as provided by law, knowingly obtain contractor bid or proposal information or source selection information before the award of a Federal agency procurement contract to which the information relates.

(c) *Actions required when an agency official contacts or is contacted by an offeror regarding non-Federal employment (subsection 27(c) of the Act).* (1) If an agency official, participating personally and substantially in a Federal agency procurement for a contract in excess of the simplified acquisition threshold, contacts or is contacted by a person who is an offeror in that Federal agency procurement regarding possible non-Federal employment for that official, the official must—

(i) Promptly report the contact in writing to the official's supervisor and to the agency ethics official; and

(ii) Either reject the possibility of non-Federal employment or disqualify himself or herself from further personal and substantial participation in that Federal agency procurement (see 3.104–5) until such time as the agency authorizes the official to resume participation in that procurement, in accordance with the requirements of 18 U.S.C. 208 and applicable agency regulations, because—

(A) The person is no longer an offeror in that Federal agency procurement; or

(B) All discussions with the offeror regarding possible non-Federal employment have terminated without an agreement or arrangement for employment.

(2) A contact is any of the actions included as ''seeking employment'' in 5 CFR 2635.603(b). In addition, unsolicited communications from offerors regarding possible employment are considered contacts.

(3) Agencies must retain reports of employment contacts for 2 years from the date the report was submitted.

(4) Conduct that complies with subsection 27(c) of the Act may be prohibited by other criminal statutes and the Standards of Ethical Conduct for Employees of the Executive Branch. See 3.104–2(b)(2).

(d) *Prohibition on former official's acceptance of compensation from a contractor (subsection 27(d) of the Act).* (1) A former official of a Federal agency may not accept compensation from a contractor that has been awarded a competitive or sole source contract, as an employee, officer, director, or consultant of the contractor within a period of 1 year after such former official—

(i) Served, at the time of selection of the contractor or the award of a contract to that contractor, as the procuring contracting officer, the source selection authority, a member of a source selection evaluation board, or the chief of a financial or technical evaluation team in a procurement in which that contractor was selected for award of a contract in excess of $10,000,000;

(ii) Served as the program manager, deputy program manager, or administrative contracting officer for a contract in excess of $10,000,000 awarded to that contractor; or

(iii) Personally made for the Federal agency a decision to—

(A) Award a contract, subcontract, modification of a contract or subcontract, or a task order or delivery order in excess of $10,000,000 to that contractor;

(B) Establish overhead or other rates applicable to a contract or contracts for that contractor that are valued in excess of $10,000,000;

(C) Approve issuance of a contract payment or payments in excess of $10,000,000 to that contractor; or

(D) Pay or settle a claim in excess of $10,000,000 with that contractor.

(2) The 1-year prohibition begins on the date—

(i) Of contract award for positions described in paragraph (d)(1)(i) of this subsection, or the date of contractor selection if the official was not serving in the position on the date of award;

(ii) The official last served in one of the positions described in paragraph (d)(1)(ii) of this subsection; or

(iii) The official made one of the decisions described in paragraph (d)(1)(iii) of this subsection.

(3) Nothing in paragraph (d)(1) of this subsection may be construed to prohibit a former official of a Federal agency from accepting compensation from any division or affiliate of a contractor that does not produce the same or similar products or services as the entity of the contractor that is responsible for the contract referred to in paragraph (d)(1) of this subsection.

3.104–4 Disclosure, protection, and marking of contractor bid or proposal information and source selection information.

(a) Except as specifically provided for in this subsection, no person or other entity may disclose contractor bid or proposal information or source selection information to any person other than a person authorized, in accordance with applicable agency regulations or procedures, by the agency head or the contracting officer to receive such information.

(b) Contractor bid or proposal information and source selection information must be protected from unauthorized disclosure in accordance with 14.401, 15.207, applicable law, and agency regulations.

(c) Individuals unsure if particular information is source selection information, as defined in 2.101, should consult with agency officials as necessary. Individuals responsible for preparing material that may be source selection information as described at paragraph (10) of the ''source selection information'' definition in 2.101 must mark the cover page and each page that the individual believes contains source selection information with the legend ''Source Selection Information—See FAR 2.101 and 3.104.'' Although the information in paragraphs (1) through (9) of the definition in 2.101 is considered to be source selection information whether or not marked, all reasonable efforts must be made to mark such material with the same legend.

(d) Except as provided in paragraph (d)(3) of this subsection, the contracting officer must notify the contractor in writing if the contracting officer believes that proprietary information, contractor bid or proposal information, or information marked in accordance with 52.215–1(e) has been inappropriately marked. The contractor that has affixed the marking must be given an opportunity to justify the marking.

(1) If the contractor agrees that the marking is not justified, or does not respond within the time specified in the notice, the contracting officer may remove the marking and release the information.

(2) If, after reviewing the contractor's justification, the contracting officer determines that the marking is not justified, the contracting officer must notify the contractor in writing before releasing the information.

(3) For technical data marked as proprietary by a contractor, the contracting officer must follow the procedures in 27.404(h).

(e) This section does not restrict or prohibit—

(1) A contractor from disclosing its own bid or proposal information or the recipient from receiving that information;

(2) The disclosure or receipt of information, not otherwise protected, relating to a Federal agency procurement after it has been canceled by the Federal agency, before contract award, unless the Federal agency plans to resume the procurement;

(3) Individual meetings between a Federal agency official and an offeror or potential offeror for, or a recipient of, a contract or subcontract under a Federal agency procurement, provided that unauthorized disclosure or receipt of contractor bid or proposal information or source selection information does not occur; or

(4) The Government's use of technical data in a manner consistent with the Government's rights in the data.

(f) This section does not authorize—

(1) The withholding of any information pursuant to a proper request from the Congress, any committee or subcommittee thereof, a Federal agency, the Comptroller General, or an Inspector General of a Federal agency, except as otherwise authorized by law or regulation. Any release containing contractor bid or proposal information or source selection information must clearly identify the information as contractor bid or proposal information or source selection information related to the conduct of a Federal agency procurement and notify the recipient that the disclosure of the information is restricted by section 27 of the Act;

(2) The withholding of information from, or restricting its receipt by, the Comptroller General in the course of a protest against the award or proposed award of a Federal agency procurement contract;

(3) The release of information after award of a contract or cancellation of a procurement if such information is

contractor bid or proposal information or source selection information that pertains to another procurement; or

(4) The disclosure, solicitation, or receipt of bid or proposal information or source selection information after award if disclosure, solicitation, or receipt is prohibited by law. (See 3.104–2(b)(5) and subpart 24.2.)

3.104–5 Disqualification.

(a) *Contacts through agents or other intermediaries.* Employment contacts between the employee and the offeror, that are conducted through agents, or other intermediaries, may require disqualification under 3.104–3(c)(1). These contacts may also require disqualification under other statutes and regulations. (See 3.104–2(b)(2).)

(b) *Disqualification notice.* In addition to submitting the contact report required by 3.104–3(c)(1), an agency official who must disqualify himself or herself pursuant to 3.104–3(c)(1)(ii) must promptly submit written notice of disqualification from further participation in the procurement to the contracting officer, the source selection authority if other than the contracting officer, and the agency official's immediate supervisor. As a minimum, the notice must—

(1) Identify the procurement;

(2) Describe the nature of the agency official's participation in the procurement and specify the approximate dates or time period of participation; and

(3) Identify the offeror and describe its interest in the procurement.

(c) *Resumption of participation in a procurement.* (1) The official must remain disqualified until such time as the agency, at its sole and exclusive discretion, authorizes the official to resume participation in the procurement in accordance with 3.104–3(c)(1)(ii).

(2) After the conditions of 3.104–3(c)(1)(ii)(A) or (B) have been met, the head of the contracting activity (HCA), after consultation with the agency ethics official, may authorize the disqualified official to resume participation in the procurement, or may determine that an additional disqualification period is necessary to protect the integrity of the procurement process. In determining the disqualification period, the HCA must consider any factors that create an appearance that the disqualified official acted without complete impartiality in the procurement. The HCA's reinstatement decision should be in writing.

(3) Government officer or employee must also comply with the provisions of 18 U.S.C. 208 and 5 CFR part 2635 regarding any resumed participation in a procurement matter. Government officer or employee may not be reinstated to participate in a procurement matter affecting the financial interest of someone with whom the individual is seeking employment, unless the individual receives—

(i) A waiver pursuant to 18 U.S.C. 208(b)(1) or (b)(3); or

(ii) An authorization in accordance with the requirements of subpart F of 5 CFR part 2635.

3.104–6 Ethics advisory opinions regarding prohibitions on a former official's acceptance of compensation from a contractor.

(a) An official or former official of a Federal agency who does not know whether he or she is or would be precluded by subsection 27(d) of the Act (see 3.104–3(d)) from accepting compensation from a particular contractor may request advice from the appropriate agency ethics official before accepting such compensation.

(b) The request for an advisory opinion must be in writing, include all relevant information reasonably available to the official or former official, and be dated and signed. The request must include information about the—

(1) Procurement(s), or decision(s) on matters under 3.104–3(d)(1)(iii), involving the particular contractor, in which the individual was or is involved, including contract or solicitation numbers, dates of solicitation or award, a description of the supplies or services procured or to be procured, and contract amount;

(2) Individual's participation in the procurement or decision, including the dates or time periods of that participation, and the nature of the individual's duties, responsibilities, or actions; and

(3) Contractor, including a description of the products or services produced by the division or affiliate of the contractor from whom the individual proposes to accept compensation.

(c) Within 30 days after receipt of a request containing complete information, or as soon thereafter as practicable, the agency ethics official should issue an opinion on whether the proposed conduct would violate subsection 27(d) of the Act.

(d)(1) If complete information is not included in the request, the agency ethics official may ask the requester to provide more information or request information from other persons, including the source selection authority, the contracting officer, or the requester's immediate supervisor.

(2) In issuing an opinion, the agency ethics official may rely upon the accuracy of information furnished by the requester or other agency sources, unless he or she has reason to believe that the information is fraudulent, misleading, or otherwise incorrect.

(3) If the requester is advised in a written opinion by the agency ethics official that the requester may accept compensation from a particular contractor, and accepts such compensation in good faith reliance on that advisory opinion, then neither the requester nor the contractor will be found to have knowingly violated subsection 27(d) of the Act. If the requester or the contractor has actual knowledge or reason to believe that the opinion is based upon fraudulent, misleading, or otherwise incorrect information, their reliance upon the opinion will not be deemed to be in good faith.

3.104–7 Violations or possible violations.

(a) A contracting officer who receives or obtains information of a violation or possible violation of subsection 27(a), (b), (c), or (d) of the Act (see 3.104–3) must determine if the reported violation or possible violation has any impact on the pending award or selection of the contractor.

(1) If the contracting officer concludes that there is no impact on the procurement, the contracting officer must forward the information concerning the violation or possible violation and documentation supporting a determination that there is no impact on the procurement to an individual designated in accordance with agency procedures.

(i) If that individual concurs, the contracting officer may proceed with the procurement.

(ii) If that individual does not concur, the individual must promptly forward the information and documentation to the HCA and advise the contracting officer to withhold award.

(2) If the contracting officer concludes that the violation or possible violation impacts the procurement, the contracting officer must promptly forward the information to the HCA.

(b) The HCA must review all information available and, in accordance with agency procedures, take appropriate action, such as—

(1) Advise the contracting officer to continue with the procurement;

(2) Begin an investigation;

(3) Refer the information disclosed to appropriate criminal investigative agencies;

(4) Conclude that a violation occurred; or

(5) Recommend that the agency head determine that the contractor, or someone acting for the contractor, has engaged in conduct constituting an offense punishable under subsection 27(e) of the Act, for the purpose of voiding or rescinding the contract.

(c) Before concluding that an offeror, contractor, or person has violated the Act, the HCA may consider that the interests of the Government are best served by requesting information from appropriate parties regarding the violation or possible violation.

(d) If the HCA concludes that section 27 of the Act has been violated, the HCA may direct the contracting officer to—

(1) If a contract has not been awarded—

(i) Cancel the procurement;

(ii) Disqualify an offeror; or

(iii) Take any other appropriate actions in the interests of the Government.

(2) If a contract has been awarded—

(i) Effect appropriate contractual remedies, including profit recapture under the clause at 52.203–10, Price or Fee Adjustment for Illegal or Improper Activity, or, if the contract has been rescinded under paragraph(d)(2)(ii) of this subsection, recovery of the amount expended under the contract;

(ii) Void or rescind the contract with respect to which—

(A) The contractor or someone acting for the contractor has been convicted for an offense where the conduct constitutes a violation of subsection 27(a) or (b) of the Act for the purpose of either—

(*1*) Exchanging the information covered by the subsections for anything of value; or

(*2*) Obtaining or giving anyone a competitive advantage in the award of a Federal agency procurement contract; or

(B) The agency head has determined, based upon a preponderance of the evidence, that the contractor or someone acting for the contractor has engaged in conduct constituting an offense punishable under subsection 27(e)(1) of the Act; or

(iii) Take any other appropriate actions in the best interests of the Government.

(3) Refer the matter to the agency suspending or debarring official.

(e) The HCA should recommend or direct an administrative or contractual remedy commensurate with the severity and effect of the violation.

(f) If the HCA determines that urgent and compelling circumstances justify an award, or award is otherwise in the interests of the Government, the HCA, in accordance with agency procedures, may authorize the contracting officer to award the contract or execute the contract modification after notifying the agency head.

(g) The HCA may delegate his or her authority under this subsection to an individual at least one organizational level above the contracting officer and of General Officer, Flag, Senior Executive Service, or equivalent rank.

3.104–8 Criminal and civil penalties, and further administrative remedies.

Criminal and civil penalties, and administrative remedies, may apply to conduct that violates the Act (see 3.104–3). See 33.102(f) for special rules regarding bid protests. See 3.104–7 for administrative remedies relating to contracts.

(a) An official who knowingly fails to comply with the requirements of 3.104–3 is subject to the penalties and administrative action set forth in subsection 27(e) of the Act.

(b) An offeror who engages in employment discussion with an official subject to the restrictions of 3.104–3, knowing that the official has not complied with 3.104–3(c)(1), is subject to the criminal, civil, or administrative penalties set forth in subsection 27(e) of the Act.

(c) An official who refuses to terminate employment discussions (see 3.104–5) may be subject to agency administrative actions under 5 CFR 2635.604(d) if the official's disqualification from participation in a particular procurement interferes substantially with the individual's ability to perform assigned duties.

3.104–9 Contract clauses.

In solicitations and contracts for other than commercial items that exceed the simplified acquisition threshold, insert the clauses at—

(a) 52.203–8, Cancellation, Rescission, and Recovery of Funds for Illegal or Improper Activity; and

(b) 52.203–10, Price or Fee Adjustment for Illegal or Improper Activity.

3.704 [Amended]

4. Amend section 3.704 in paragraph (c)(1) by removing ''3.104–10'' and adding ''3.104–7'' in its place.

PART 4—ADMINISTRATIVE MATTERS

5. Amend section 4.802 in paragraphs (a)(1), (a)(2), and (a)(3) by removing '', which shall document'' and adding ''that documents'' in their place; in the introductory text of paragraph (c) by removing ''shall'' the first time it appears and adding ''must'' in its place, and removing ''shall'' the second time it appears; in the first sentence of paragraph (d) by removing ''shall'' and adding ''must'' in its place; and by revising paragraph (e) to read as follows:

4.802 Contract files.

* * * * *

(e) Contents of contract files that are contractor bid or proposal information or source selection information as defined in 2.101 must be protected from disclosure to unauthorized persons (see 3.104–4).

* * * * *

PART 9—CONTRACTOR QUALIFICATIONS

9.105–3 [Amended]

6. Amend section 9.105–3 in paragraph (c) by removing ''and/or'' and adding ''or'' in its place, and by removing ''3.104–3'' and adding ''3.104–4'' in its place.

9.505 [Amended]

7. Amend section 9.505 in paragraph (b)(2) by removing ''3.104–3'' and adding ''2.101'' in its place.

PART 15—CONTRACTING BY NEGOTIATION

8. Amend section 15.404–2 by revising paragraph (a)(5) to read as follows:

15.404–2 Information to support proposal analysis.

(a) * * *

(5) Field pricing information and other reports may include proprietary or source selection information (see 2.101). This information must be appropriately identified and protected accordingly.

* * * * *

PART 52—SOLICITATION PROVISIONS AND CONTRACT CLAUSES

52.203–8 [Amended]

9. Amend section 52.203–8 in the introductory paragraph by removing ''in solicitations and contracts''.

[FR Doc. 02–5823 Filed 3–19–02; 8:45 am]

BILLING CODE 6820–EP–P

DEPARTMENT OF DEFENSE

GENERAL SERVICES ADMINISTRATION

NATIONAL AERONAUTICS AND SPACE ADMINISTRATION

48 CFR Parts 8 and 52

[FAC 2001–06; FAR Case 2000–008; Item V]

RIN 9000–AJ09

Federal Acquisition Regulation; Acquisition of Helium

AGENCIES: Department of Defense (DoD), General Services Administration (GSA), and National Aeronautics and Space Administration (NASA).

ACTION: Final rule.

SUMMARY: The Civilian Agency Acquisition Council and the Defense Acquisition Regulations Council (Councils) have agreed on a final rule amending the Federal Acquisition Regulation (FAR) to implement the Helium Privatization Act of 1996 (Pub. L. 104–273) and associated changes to the Department of the Interior's regulations regarding its helium program.

DATES: *Effective Date:* April 4, 2002.

FOR FURTHER INFORMATION CONTACT: The FAR Secretariat, Room 4035, GS Building, Washington, DC 20405, (202) 501–4755, for information pertaining to status or publication schedules. For clarification of content, contact Ms. Linda Nelson, Procurement Analyst, at (202) 501–1900. Please cite FAC 2001–06, FAR case 2000–008.

SUPPLEMENTARY INFORMATION:

A. Background

This final rule revises FAR Subpart 8.5 and the clause at 52.208–8 to implement the Department of Interior final rule regarding helium contracts that was published in the **Federal Register** at 63 FR 66760, December 3, 1998. The final rule—

- Changes the definitions;
- Eliminates the requirement for certain contracts and subcontractors to submit helium forecasts; and
- Establishes the requirement that contractors and subcontractors under contracts with a major helium requirement must report purchases of helium from Federal helium suppliers.

DoD, GSA, and NASA published a proposed rule in the **Federal Register** at 66 FR 2752, January 11, 2001. One source, the Department of Interior, submitted a comment in response to the proposed rule, recommending that the Councils add ''Amarillo Field Office'' to the address provided in the definition of ''Bureau of Land Management'' at FAR 8.501 and the clause at 52.208–8(a). The Councils concurred with the change and included it in the final rule.

This is not a significant regulatory action, and therefore, was not subject to review under Section 6(b) of Executive Order 12866, Regulatory Planning and Review, dated September 30, 1993. This rule is not a major rule under 5 U.S.C. 804.

B. Regulatory Flexibility Act

The Department of Defense, the General Services Administration, and the National Aeronautics and Space Administration certify that this final rule will not have a significant economic impact on a substantial number of small entities within the meaning of the Regulatory Flexibility Act, 5 U.S.C. 601, *et seq.*, because the rule eliminates the information requirement for submitting helium forecasts and replaces it with a similar information requirement to report helium purchases. We estimate that the net change is zero.

C. Paperwork Reduction Act

The Paperwork Reduction Act does apply; however, these changes to the FAR do not impose additional information collection requirements to the paperwork burden previously approved under OMB Control Number 9000–0113.

List of Subjects in 48 CFR Parts 8 and 52

Government procurement.

Dated: March 6, 2002.

Al Matera,

Director, Acquisition Policy Division.

Therefore, DoD, GSA, and NASA amend 48 CFR parts 8 and 52 as set forth below:

1. The authority citation for 48 CFR parts 8 and 52 continues to read as follows:

Authority: 40 U.S.C. 486(c); 10 U.S.C. chapter 137; and 42 U.S.C. 2473(c).

PART 8—REQUIRED SOURCES OF SUPPLIES AND SERVICES

2. Revise subpart 8.5, consisting of sections 8.500 through 8.505, to read as follows:

Subpart 8.5—Acquisition of Helium

8.500 Scope of subpart.

This subpart implements the requirements of the Helium Act (50 U.S.C. 167, *et seq.*) concerning the acquisition of liquid or gaseous helium by Federal agencies or by Government contractors or subcontractors for use in the performance of a Government contract (also see 43 CFR part 3195).

8.501 Definitions.

As used in this subpart—

Bureau of Land Management means the Department of the Interior, Bureau of Land Management, Amarillo Field Office, Helium Operations, 801 South Fillmore Street, Suite 500, Amarillo, TX 79101–3545.

Federal helium supplier means a private helium vendor that has an in-kind crude helium sales contract with the Bureau of Land Management (BLM) and that is on the BLM Amarillo Field Office's Authorized List of Federal Helium Suppliers available via the Internet at *http://www.nm.blm.gov/www/amfo/amfo_home.html.*

Major helium requirement means an estimated refined helium requirement greater than 200,000 standard cubic feet (scf) (measured at 14.7 pounds per square inch absolute pressure and 70 degrees Fahrenheit temperature) of gaseous helium or 7510 liters of liquid helium delivered to a helium use location per year.

8.502 Policy.

Agencies and their contractors and subcontractors must purchase major helium requirements from Federal helium suppliers, to the extent that supplies are available.

8.503 Exception.

The requirements of this subpart do not apply to contracts or subcontracts in which the helium was acquired by the contractor prior to award of the contract or subcontract.

8.504 Procedures.

The contracting officer must forward the following information to the Bureau of Land Management within 45 days of the close of each fiscal quarter:

(a) The name of any company that supplied a major helium requirement.

(b) The amount of helium purchased.

(c) The delivery date(s).

(d) The location where the helium was used.

8.505 Contract clause.

Insert the clause at 52.208–8, Required Sources for Helium and Helium Usage Data, in solicitations and contracts if it is anticipated that performance of the contract involves a major helium requirement.

PART 52—SOLICITATION PROVISIONS AND CONTRACT CLAUSES

3. Revise the clause heading and section 52.208–8 to read as follows:

52.208–8 Required Sources for Helium and Helium Usage Data.

As prescribed in 8.505, insert the following clause:

Required Sources for Helium and Helium Usage Data (Apr 2002)

(a) *Definitions.*

Bureau of Land Management, as used in this clause, means the Department of the Interior, Bureau of Land Management, Amarillo Field Office, Helium Operations, located at 801 South Fillmore Street, Suite 500, Amarillo, TX 79101–3545.

Federal helium supplier means a private helium vendor that has an in-kind crude helium sales contract with the Bureau of Land Management (BLM) and that is on the BLM Amarillo Field Office's Authorized List of Federal Helium Suppliers available via the Internet at http://www.nm.blm.gov/www/amfo/amfo_home.html.

Major helium requirement means an estimated refined helium requirement greater than 200,000 standard cubic feet (scf) (measured at 14.7 pounds per square inch absolute pressure and 70 degrees Fahrenheit temperature) of gaseous helium or 7510 liters of liquid helium delivered to a helium use location per year.

(b) *Requirements*—(1) Contractors must purchase major helium requirements from Federal helium suppliers, to the extent that supplies are available.

(2) The Contractor shall provide to the Contracting Officer the following data within 10 days after the Contractor or subcontractor receives a delivery of helium from a Federal helium supplier—

(i) The name of the supplier;

(ii) The amount of helium purchased;

(iii) The delivery date(s); and

(iv) The location where the helium was used.

(c) *Subcontracts.* The Contractor shall insert this clause, including this paragraph (c), in any subcontract or order that involves a major helium requirement.

(End of clause)

[FR Doc. 02–5824 Filed 3–19–02; 8:45 am]

BILLING CODE 6820–EP–P

DEPARTMENT OF DEFENSE

GENERAL SERVICES ADMINISTRATION

NATIONAL AERONAUTICS AND SPACE ADMINISTRATION

48 CFR Parts 12, 19, and 52

[FAC 2001–06; FAR Case 2001–003; Item VI]

RIN 9000–AJ32

Federal Acquisition Regulation; HUBZone Program Applicability

AGENCIES: Department of Defense (DoD), General Services Administration (GSA), and National Aeronautics and Space Administration (NASA).

ACTION: Final rule.

SUMMARY: The Civilian Agency Acquisition Council and the Defense Acquisition Regulations Council (Councils) have agreed on a final rule that amends the Federal Acquisition Regulation (FAR) to simplify current FAR language that expands the applicability of the HUBZone Program to all agencies covered by the FAR after September 30, 2000.

DATES: *Effective Date:* April 4, 2002.

FOR FURTHER INFORMATION CONTACT: The FAR Secretariat, Room 4035, GS Building, Washington, DC 20405, (202) 501–4755, for information pertaining to status or publication schedules. For clarification of content, contact Ms. Rhonda Cundiff, Procurement Analyst, at (202) 501–0044. Please cite FAC 2001–06, FAR case 2001–003.

SUPPLEMENTARY INFORMATION:

A. Background

This final rule amends and simplifies language at FAR Parts 12, 19, and 52. Current FAR language expands the applicability of the HUBZone Program to all agencies covered by the FAR after September 30, 2000. Initially, procurements under the HUBZone Program applied to a limited list of Federal agencies. Under Section 602(b) of the HUBZone Act of 1997 (Title VI of Pub. L. 105–135), this initial limited applicability expired on September 30, 2000.

The purpose of the program is to provide Federal contracting assistance for qualified small business concerns located in historically underutilized business zones in an effort to increase employment opportunities, investment, and economic development in these areas. The program provides for set-asides, sole-source awards, and price evaluation preferences for HUBZone small business concerns and establishes goals for awards to such concerns.

This is not a significant regulatory action, and therefore, was not subject to review under Section 6(b) of Executive Order 12866, Regulatory Planning and Review, dated September 30, 1993. This rule is not a major rule under 5 U.S.C. 804.

B. Regulatory Flexibility Act

This final rule does not constitute a significant FAR revision within the meaning of FAR 1.501 and Public Law 98–577, and publication for public comments is not required. However, the Councils will consider comments from small entities concerning the affected FAR Parts 12, 19, and 52 in accordance with 5 U.S.C. 610. Interested parties must submit such comments separately and should cite 5 U.S.C. 601, *et seq.* (FAC 2001–06, FAR case 2001–003), in correspondence.

C. Paperwork Reduction Act

The Paperwork Reduction Act does not apply because the changes to the FAR do not impose information collection requirements that require the approval of the Office of Management and Budget under 44 U.S.C. 3501, *et seq.*

List of Subjects in 48 CFR Parts 12, 19, and 52

Government procurement.

Dated: March 6, 2002.

Al Matera,

Director, Acquisition Policy Division.

Therefore, DoD, GSA, and NASA amend 48 CFR parts 12, 19, and 52 as set forth below:

1. The authority citation for 48 CFR parts 12, 19, and 52 continues to read as follows:

Authority: 40 U.S.C. 486(c); 10 U.S.C. chapter 137; and 42 U.S.C. 2473(c).

PART 12—ACQUISITION OF COMMERCIAL ITEMS

2. Amend section 12.301 by revising the introductory text of paragraph (b) and (b)(2) to read as follows:

12.301 Solicitation provisions and contract clauses for the acquisition of commercial items.

* * * * *

(b) Insert the following provisions in solicitations for the acquisition of commercial items, and clauses in solicitations and contracts for the acquisition of commercial items:

* * * * *

(2) *The provision at 52.212–3, Offeror Representations and Certifications—Commercial Items.* This provision provides a single, consolidated list of certifications and representations for the acquisition of commercial items and is attached to the solicitation for offerors to complete and return with their offer. This provision may not be tailored except in accordance with Subpart 1.4. Use the provision with its Alternate I in solicitations issued by DoD, NASA, or the Coast Guard that are expected to exceed the threshold at 4.601(a). Use the provision with its Alternate II in solicitations for acquisitions for which small disadvantaged business procurement mechanisms are authorized on a regional basis;

* * * * *

PART 19—SMALL BUSINESS PROGRAMS

19.307 [Amended]

3. Amend section 19.307 by removing paragraph (a)(2); by redesignating paragraph (a)(3) as (a)(2); in the newly designated paragraph (a)(2) by removing ''Alternate II'' and adding ''Alternate I'' in its place; and in paragraph (c) by removing ''and contracts''.

4. Revise section 19.1302 to reads as follows:

19.1302 Applicability.

The procedures in this subpart apply to all Federal agencies that employ one or more contracting officers.

PART 52—SOLICITATION PROVISIONS AND CONTRACT CLAUSES

5. Amend section 52.212–3 by revising the date of the provision; by adding paragraph (c)(10); by revising the introductory text of Alternate I; by redesignating paragraph (c)(10) of Alternate I as (c)(11); and by removing Alternate III. The revised and added text reads as follows:

52.212–3 Offeror Representations and Certifications—Commercial Items.

* * * * *

Offeror Representations and Certifications—Commercial Items (Apr 2002)

* * * * *

(c) * * *

(10) *HUBZone small business concern.* [Complete only if the offeror represented itself as a small business concern in paragraph (c)(1) of this provision.] The offeror represents, as part of its offer, that—

(i) It [ ] is, [ ] is not a HUBZone small business concern listed, on the date of this representation, on the List of Qualified HUBZone Small Business Concerns maintained by the Small Business Administration, and no material change in ownership and control, principal place of ownership, or HUBZone employee percentage has occurred since it was certified by the Small Business Administration in accordance with 13 CFR part 126; and

(ii) It [ ] is, [ ] is not a joint venture that complies with the requirements of 13 CFR part 126, and the representation in paragraph (c)(10)(i) of this provision is accurate for the HUBZone small business concern or concerns that are participating on the joint venture. [*The offeror shall enter the name or names of the HUBZone small business concern or concerns that are participating in the joint venture:*_____.] Each HUBZone small business concern participating in the joint venture shall submit a separate signed copy of the HUBZone representation.

* * * * *

Alternate I (Apr 2002). As prescribed in 12.301(b)(2), add the following paragraph (c)(11) to the basic provision:

* * * * *

6. Amend section 52.219–1 by revising the date of the provision; by adding paragraph (b)(6); by removing Alternate I and redesignating Alternate II as Alternate I; and by revising the introductory text of the newly designated Alternate I to read as follows:

52.219–1 Small Business Program Representations.

* * * * *

Small Business Program Representations (Apr 2002)

* * * * *

(b) * * *

(6) [*Complete only if the offeror represented itself as a small business concern in paragraph (b)(1) of this provision.*] The offeror represents, as part of its offer, that—

(i) It [ ] is, [ ] is not a HUBZone small business concern listed, on the date of this representation, on the List of Qualified HUBZone Small Business Concerns maintained by the Small Business Administration, and no material change in ownership and control, principal office, or HUBZone employee percentage has occurred since it was certified by the Small Business Administration in accordance with 13 CFR part 126; and

(ii) It [ ] is, [ ] is not a joint venture that complies with the requirements of 13 CFR part 126, and the representation in paragraph (b)(6)(i) of this provision is accurate for the HUBZone small business concern or concerns that are participating in the joint venture. [*The offeror shall enter the name or names of the HUBZone small business concern or concerns that are participating in the joint venture:*_____.] Each HUBZone small business concern participating in the joint venture shall submit a separate signed copy of the HUBZone representation.

* * * * *

Alternate I (Apr 2002). As prescribed in 19.307(a)(2), add the following paragraph (b)(7) to the basic provision:

* * * * *

[FR Doc. 02–5825 Filed 3–19–02; 8:45 am]

BILLING CODE 6820–EP–P

DEPARTMENT OF DEFENSE

GENERAL SERVICES ADMINISTRATION

NATIONAL AERONAUTICS AND SPACE ADMINISTRATION

48 CFR Part 52

[FAC 2001–06; FAR Case 1999–612; Item VII]

RIN 9000–AI95

Federal Acquisition Regulation; Application of Labor Clauses

AGENCIES: Department of Defense (DoD), General Services Administration (GSA), and National Aeronautics and Space Administration (NASA).

ACTION: Final rule.

SUMMARY: The Civilian Agency Acquisition Council and the Defense Acquisition Regulations Council (Councils) have agreed on a final rule amending the Federal Acquisition Regulation (FAR) by revising the clause, Terms and Conditions—Simplified Acquisitions (Other Than Commercial Items), to clarify the application of labor clauses below the simplified acquisition threshold. The Councils also revised the Equal Opportunity clause to incorporate the exception for work performed outside the United States.

DATES: *Effective Date:* April 4, 2002.

FOR FURTHER INFORMATION CONTACT: The FAR Secretariat, Room 4035, GS Building, Washington, DC 20405, (202) 501–4755, for information pertaining to status or publication schedules. For clarification of content, contact Ms. Linda Nelson, Procurement Analyst, at (202) 501–1900. Please cite FAC 2001–06, FAR case 1999–612.

SUPPLEMENTARY INFORMATION:

A. Background

This final rule—

1. Moves the Prohibition of Segregated Facilities clause from the list at paragraph (b), to the list at paragraph (a), of the clause at 52.213–4 and clarifies the existing requirements of 41 CFR 60–1.8, promulgated by the Department of Labor under E.O. 11246. The Prohibition of Segregated Facilities clause must be included in contracts whenever the Equal Opportunity clause (FAR 52.222–26) is included.

2. Moves the Equal Opportunity clause from the list at paragraph (b), to the list at paragraph (a), of the clause at 52.213–4 because the clause must be included in almost all contracts, even those under $10,000, in accordance with the requirements at FAR 22.802(a)(1)

and 22.807(b). Even though included, the clause is inapplicable unless the aggregate value of contracts and subcontracts awarded to the contractor exceeds $10,000 in a year.

3. Makes other revisions to paragraphs (b)(1)(i), (b)(1)(v), and (b)(1)(vii) of the clause at FAR 52.213–4, and paragraph (a) of the clause at FAR 52.222–26, relating to geographic applicability of labor clauses, to comply with the current regulations at FAR 22.603, 22.807(b)(2), 22.1001, 22.1003–2, and 22.1408(a)(1).

DoD, GSA, and NASA published a proposed rule in the **Federal Register** at 65 FR 64298, October 26, 2000. Two respondents submitted public comments. One respondent is in favor of the rule, while the other commenter believes the 52.222–36 clause change creates a double standard, strongly favoring Americans, while making non-Americans working outside the United States susceptible to abuses by contractors. The Councils believe that the comment is outside the scope of the rule. The clause at 52.222–36 does not apply to employees recruited outside the United States for work performed outside the United States. This has been in the FAR since this FAR subpart was written in 1984. It is in the Department of Labor regulation which is the source of the FAR subpart (see 41 CFR 60–741.4(a)(4)). The concept is that the country in which the work is performed has the sovereignty to write its own laws regarding affirmative action of those disabled workers. This case confirms that this long-standing exception applies to items whether commercial or noncommercial. Accordingly, the comments resulted in no change to the rule.

This is not a significant regulatory action, and therefore, was not subject to review under Section 6(b) of Executive Order 12866, Regulatory Planning and Review, dated September 30, 1993. This rule is not a major rule under 5 U.S.C. 804.

B. Regulatory Flexibility Act

The Department of Defense, the General Services Administration, and the National Aeronautics and Space Administration certify that this final rule will not have a significant economic impact on a substantial number of small entities within the meaning of the Regulatory Flexibility Act, 5 U.S.C. 601, *et seq.*, because this rule only clarifies the existing requirements.

C. Paperwork Reduction Act

The Paperwork Reduction Act does not apply because the changes to the FAR do not impose information collection requirements that require the approval of the Office of Management and Budget under 44 U.S.C. 3501, *et seq.*

List of Subjects in 48 CFR Part 52

Government procurement.

Dated: March 6, 2002.

Al Matera,

Director, Acquisition Policy Division.

Therefore, DoD, GSA, and NASA amend 48 CFR part 52 as set forth below:

PART 52—SOLICITATION PROVISIONS AND CONTRACT CLAUSES

1. The authority citation for 48 CFR part 52 continues to read as follows:

Authority: 40 U.S.C. 486(c); 10 U.S.C. chapter 137; and 42 U.S.C. 2473(c).

2. Amend section 52.213–4 by—

a. Revising the date of the clause;

b. Redesignating paragraphs (a)(1)(ii) and (a)(1)(iii) as (a)(1)(iv) and (a)(1)(v), respectively, and adding new paragraphs (a)(1)(ii) and (a)(1)(iii);

c. Removing paragraphs (b)(1)(ii) and (b)(1)(iii), and redesignating paragraphs (b)(1)(iv) through (b)(1)(xiii) as (b)(1)(ii) through (b)(1)(xi), respectively; and

d. Revising paragraph (b)(1)(i) and newly designated paragraphs (b)(1)(iii) and (b)(1)(v).

The added and revised text reads as follows:

52.213–4 Terms and Conditions Simplified Acquisitions (Other Than Commercial Items).

* * * * *

Terms and Conditions—Simplified Acquisitions (Other Than Commercial Items) (Apr 2002)

(a) * * *

(1) * * *

(ii) 52.222–21, Prohibition of Segregated Facilities (Feb 1999) (E.O. 11246).

(iii) 52.222–26, Equal Opportunity (Apr 2002) (E.O. 11246).

* * * * *

(b) * * *

(1)

(i) 52.222–20, Walsh-Healey Public Contracts Act (Dec 1996) (41 U.S.C. 35–45) (Applies to supply contracts over $10,000 in the United States, Puerto Rico, or the U.S. Virgin Islands).

* * * * *

(iii) 52.222–36, Affirmative Action for Workers with Disabilities (June 1998) (29 U.S.C. 793). (Applies to contracts over $10,000, unless the work is to be performed outside the United States by employees recruited outside the United States.) (For purposes of this clause, *United States* includes the 50 States, the District of Columbia, Puerto Rico, the Northern Mariana Islands, American Samoa, Guam, the U.S. Virgin Islands, and Wake Island.)

* * * * *

(v) 52.222–41, Service Contract Act of 1965, As Amended (May 1989) (41 U.S.C. 351, *et seq.*) (Applies to service contracts over $2,500 that are subject to the Service Contract Act and will be performed in the United States, District of Columbia, Puerto Rico, the Northern Mariana Islands, American Samoa, Guam, the U.S. Virgin Islands, Johnston Island, Wake Island, or the outer continental shelf lands).

* * * * *

3. Amend section 52.222–26 by—

a. Revising the date of the clause;

b. Removing the paragraph designation and the introductory text of paragraph (b);

c. Redesignating paragraph (a) as paragraph (b) and revising the introductory text; and

d. Adding a new paragraph (a).

The added and revised text reads as follows:

52.222–26 Equal Opportunity.

* * * * *

Equal Opportunity (Apr 2002)

(a) *Definition. United States,* as used in this clause, means the 50 States, the District of Columbia, Puerto Rico, the Northern Mariana Islands, American Samoa, Guam, the U.S. Virgin Islands, and Wake Island.

(b) If, during any 12-month period (including the 12 months preceding the award of this contract), the Contractor has been or is awarded nonexempt Federal contracts and/or subcontracts that have an aggregate value in excess of $10,000, the Contractor shall comply with paragraphs (b)(1) through (b)(11) of this clause, except for work performed outside the United States by employees who were not recruited within the United States. Upon request, the Contractor shall provide information necessary to determine the applicability of this clause.

* * * * *

[FR Doc. 02–5826 Filed 3–19–02; 8:45 am]

BILLING CODE 6820–EP–P

DEPARTMENT OF DEFENSE

GENERAL SERVICES ADMINISTRATION

NATIONAL AERONAUTICS AND SPACE ADMINISTRATION

48 CFR Parts 1, 5, 6, 9, 31, and 52

[FAC 2001–06; Item VIII]

Federal Acquisition Regulation; Technical Amendments

AGENCIES: Department of Defense (DoD), General Services Administration (GSA), and National Aeronautics and Space Administration (NASA).

ACTION: Final rule.

SUMMARY: This document makes amendments to the Federal Acquisition Regulation in order to update references and make editorial changes.

DATES: *Effective Date:* April 4, 2002.

FOR FURTHER INFORMATION CONTACT: The FAR Secretariat, Room 4035, GS Building, Washington, DC 20405, (202) 501–4755. Please cite FAC 2001–06, Technical Amendments.

List of Subjects in 48 CFR Parts 1, 5, 6, 9, 31, and 52

Government procurement.

Dated: March 6, 2002.

Al Matera,

Director, Acquisition Policy Division.

Therefore, DoD, GSA, and NASA amend 48 CFR parts 1, 5, 6, 9, and 52 as set forth below:

1. The authority citation for 48 CFR parts 1, 5, 6, 9, and 52 continues to read as follows:

Authority: 40 U.S.C. 486(c); 10 U.S.C. chapter 137; and 42 U.S.C. 2473(c).

PART 1—FEDERAL ACQUISITION REGULATIONS SYSTEM

1.404 [Amended]

2. Amend section 1.404 in paragraph (c) by removing ''Associate'' and adding ''Assistant'' in its place.

PART 5—PUBLICIZING CONTRACT ACTIONS

5.207 [Amended]

3. Amend section 5.207(c)(4) in paragraph 6. of ''Format Item and Explanation/Description of Entry'' by removing ''5.207(g)'' and adding ''5.207(h)'' in its place.

PART 6—COMPETITION REQUIREMENTS

6.302–5 [Amended]

4. Amend section 6.302–5 in paragraph (b)(2) by removing the word ''Handicapped'' and adding ''Disabled'' in its place.

PART 9—CONTRACTOR QUALIFICATIONS

9.104–3 [Amended]

5. Amend section 9.104–3 in paragraph (c) by removing ''(see *Affiliates* and *Concerns* in 19.101)'' and adding ''(see *Concern* in 19.001 and *Affiliates* in 19.101)'' in its place.

PART 31—CONTRACT COST PRINCIPLES AND PROCEDURES

31.101 [Amended]

6. Amend section 31.101 in the next-to-the-last sentence by removing ''Associate'' and adding ''Assistant'' in its place.

PART 52—SOLICITATION PROVISIONS AND CONTRACT CLAUSES

52.219–19 [Amended]

7. Amend section 52.219–19 in the introductory text by removing ''19.1007(a)'' and adding ''19.1008(a)'' in its place.

52.219–20 [Amended]

8. Amend section 52.219–20 in the introductory text by removing ''19.1007(b)'' and adding ''19.1008(b)'' in its place.

[FR Doc. 02–5827 Filed 3–19–02; 8:45 am]

BILLING CODE 6820–EP–P

DEPARTMENT OF DEFENSE

GENERAL SERVICES ADMINISTRATION

NATIONAL AERONAUTICS AND SPACE ADMINISTRATION

48 CFR Chapter 1

Federal Acquisition Regulation; Small Entity Compliance Guide

AGENCIES: Department of Defense (DoD), General Services Administration (GSA), and National Aeronautics and Space Administration (NASA).

ACTION: Small Entity Compliance Guide.

SUMMARY: This document is issued under the joint authority of the Secretary of Defense, the Administrator of General Services and the Administrator for the National Aeronautics and Space Administration. This *Small Entity Compliance Guide* has been prepared in accordance with Section 212 of the Small Business Regulatory Enforcement Fairness Act of 1996 (Public Law 104–121). It consists of a summary of rules appearing in Federal Acquisition Circular (FAC) 2001–06 which amend the FAR. An asterisk (*) next to a rule indicates that a Regulatory Flexibility Analysis has been prepared in accordance with 5 U.S.C. 604. Interested parties may obtain further information regarding these rules by referring to FAC 2001–06 which precedes this document. These documents are also available via the Internet at *http://www.arnet.gov/far.*

FOR FURTHER INFORMATION CONTACT: Laurie Duarte, FAR Secretariat, (202) 501–4225. For clarification of content, contact the analyst whose name appears in the table below.

LIST OF RULES IN FAC 2001–06

Item	Subject	FAR case	Analyst
I	Commercial Items—Standard Form 1449	2000–012	Moss.
II	Definitions for ''Contract Action'' and ''Contracting Action''	2000–402	Moss.
III	Definitions for Sealed Bid and Negotiated Procurements	2000–403	DeStefano.
IV	Procurement Integrity Rewrite	1998–024	DeStefano.
V	Acquisition of Helium	2000–008	Nelson.
VI	HUBZone Program Applicability	2001–003	Cundiff.
VII	Application of Labor Clauses	1999–612	Nelson.
VIII	Technical Amendments.		

Item I—Commercial Items—SF 1449 (FAR Case 2000–012)

Standard Form 1449, Solicitation/Contract/Order for Commercial Items, is prescribed by the FAR for the acquisition of commercial items. This final rule makes several minor revisions to the form, including the addition of a block to indicate that the acquisition is a HUBZone set-aside, the substitution of a NAICS code for the SIC code, the notation that award is made only on the offeror's items specifically listed in block 29, and the addition of several blocks in the area of the form used as a receiving report by the Government. All of the changes involve blocks that are completed by the Government.

Item II—Definitions for ''Contract Action'' and ''Contracting Action'' (FAR Case 2000–402)

This final rule amends the FAR to provide for consistent use of the term ''contract action.'' The rule changes the term ''contracting action'' to ''contract action'' throughout the FAR and makes other editorial changes to clarify the text.

Item III—Definitions for Sealed Bid and Negotiated Procurements (FAR Case 2000–403)

This final rule amends the FAR to clarify definitions that are used for sealed bid and negotiated procurements. The final rule—

- Moves the definitions of ''bid sample'' and ''descriptive literature'' from FAR Part 14 to FAR 2.101 because the definitions apply to more than one FAR part, *e.g.,* parts 14 and 15;
- Amends those definitions and the definition of ''offer'' in accordance with plain language guidelines;
- Revises applicable provisions in FAR Part 52 to conform with the new definitions;
- Adds a new definition for ''solicitation'' at FAR 2.101; and
- Provides definitions for ''bid'' and ''bidder'' in FAR Part 28 because, as used in that part, the terms address sealed bid and negotiated acquisitions.

The rule clarifies terminology used in FAR 15.201(f), 15.609(e), and 35.007(g). Where we mean an entity that is actively seeking a contract, we use the term ''prospective offeror.'' However, those cites describe processes that are set up to ensure fair and open competition. Therefore, any interested party is able to participate, including parties that the Government has not yet identified. Therefore, the rule uses the more general term ''potential offeror.''

Item IV—Procurement Integrity Rewrite (FAR Case 1998–024)

This final rule amends FAR parts 2, 3, 4, 9, 15, and 52 to rewrite the procurement integrity coverage (the implementation of section 27 of the Office of Federal Procurement Policy Act (41 U.S.C. 423) (more commonly referred to as the Procurement Integrity Act)) in plain language.

FAR 3.104 implements prohibitions, restrictions, and other requirements of the Procurement Integrity Act that are placed on certain agency officials that participate in Federal agency procurements. However, other statutes and regulations also govern the conduct of Government employees. While specific guidance pertaining to the Procurement Integrity Act at FAR 3.104 does not implement these other statutes and regulations, the rule does add guidance to alert these agency officials that they should seek advice from agency ethics officials before engaging in certain activities that could have serious consequences, including criminal prosecution.

These revisions to FAR 3.104 do not change either the requirements of the Procurement Integrity Act or change, in any manner, who is covered by, or the activities covered in, Office of Government Ethics regulations interpreting conflict of interest statutes.

Item V—Acquisition of Helium (FAR Case 2000–008)

This final rule revises FAR Subpart 8.5 and the clause at 52.208–8 to implement the Department of the Interior final rule regarding helium contracts that was published in the **Federal Register** at 63 FR 66760, December 3, 1998. The final rule—

- Changes the definitions;
- Eliminates the requirement for certain contractors and subcontractors to submit helium forecasts; and
- Establishes the requirement that contractors and subcontractors under contracts with a major helium requirement must report purchases of helium from Federal helium suppliers.

Item VI—HUBZone Program Applicability (FAR Case 2001–003)

The HUBZone Act of 1997 expanded the applicability of the HUBZONE Program to all agencies covered by the FAR after September 30, 2000, and is currently reflected in the FAR. This rule amends the FAR to simplify the existing language at FAR parts 12, 19, and 52.

Item VII—Application of Labor Clauses (FAR Case 1999–612)

This final rule affects all contracting officers who use the FAR. The rule—

- Moves the Prohibition of Segregated Facilities clause from the list at paragraph (b), to the list at paragraph (a), of the clause at 52.213–4 and clarifies the existing requirements of 41 CFR 60–1.8, promulgated by the Department of Labor under E.O. 11246. The Prohibition of Segregated Facilities clause must be included in contracts whenever the Equal Opportunity clause (FAR 52.222–26) is included.
- Moves the Equal Opportunity clause from the list at paragraph (b), to the list at paragraph (a), of the clause at 52.213–4 because the clause must be included in almost all contracts, even those under $10,000, in accordance with the requirements at FAR 22.802(a)(1) and 22.807(b). Even though included, the clause is inapplicable unless the aggregate value of contracts and subcontracts awarded to the contractor exceeds $10,000 in a year.
- Makes other revisions to the clause at FAR 52.222–26, Equal Opportunity, to include a definition of ''United States'' and incorporate the exception for work performed outside the United States.

Item VIII—Technical Amendments

These amendments update sections and make editorial changes at FAR 1.404, 5.207, 6.302–5, 9.104–3, 31.101, 52.219–19, and 52.219–20.

Dated: March 6, 2002.

Al Matera,

Director, Acquisition Policy Division.

[FR Doc. 02–5828 Filed 3–19–02; 8:45 am]

BILLING CODE 6820–EP–P

Federal Register

Wednesday,
March 20, 2002

Part III

Department of Defense
General Services Administration
National Aeronautics and Space Administration

48 CFR Parts 2, 31, 47, and 52

Federal Acquisition Regulation; Miscellaneous Cost Principles; Proposed Rule

DEPARTMENT OF DEFENSE

GENERAL SERVICES ADMINISTRATION

NATIONAL AERONAUTICS AND SPACE ADMINISTRATION

48 CFR Parts 2, 31, 47, and 52

[FAR Case 2001–029]

RIN: 9000–AJ33

Federal Acquisition Regulation; Miscellaneous Cost Principles

AGENCIES: Department of Defense (DoD), General Services Administration (GSA), and National Aeronautics and Space Administration (NASA).

ACTION: Proposed rule.

SUMMARY: The Civilian Agency Acquisition Council and the Defense Acquisition Regulations Council (Councils) are proposing to amend the Federal Acquisition Regulation (FAR) to delete the cost principle concerning transportation costs, and to revise the cost principles concerning cost of money, other business expenses, and deferred research and development costs.

DATES: Interested parties should submit comments in writing on or before May 20, 2002 to be considered in the formulation of a final rule.

ADDRESSES: Submit written comments to: General Services Administration, FAR Secretariat (MVP), 1800 F Street, NW, Room 4035, ATTN: Laurie Duarte, Washington, DC 20405.

Submit electronic comments via the Internet to: *farcase.2001–029@gsa.gov.* Please submit comments only and cite FAR case 2001–029 in all correspondence related to this case.

FOR FURTHER INFORMATION CONTACT: The FAR Secretariat, Room 4035, GS Building, Washington, DC, 20405, at (202) 501–4755 for information pertaining to status or publication schedules. For clarification of content, contact Jeremy Olson, at (202) 501–3221. Please cite FAR case 2001–029.

SUPPLEMENTARY INFORMATION:

A. Background

The Councils are proposing the following changes related to the cost principles at FAR 31.205–10, Cost of money; FAR 31.205–28, Other business expenses; FAR 31.205–45, Transportation costs; and FAR 31.205–48, Deferred research and development costs:

1. *Cost of money.* Revise the cost principle by deleting—

a. Portions of the current FAR 31.205–10(a)(i) and (a)(ii) that duplicate 48 CFR 9904.414, Cost Accounting Standard-Cost of Money as an Element of the Cost of Facilities Capital;

b. FAR 31.205–10(a)(2)(ii), (a)(3), and (b)(3), because these paragraphs duplicate the recordkeeping requirements at 31.201–2(d); and

c. The definitions of ''Cost of capital committed to facilities'' and ''facilities capital'' from FAR 31.001, Definitions, since these terms are not used elsewhere in the FAR. In addition, add a definition to FAR 2.101, Definitions, for the term ''facilities capital cost of money'' which is used in several places in the FAR.

2. *Other business expenses.* Delete the term ''when allocated on an equitable basis'' from FAR 31.205–28. It is unnecessary to repeat the requirement for allocation in this cost principle since it is already addressed at FAR 31.201–4, Determining allocability; FAR 31.202, Direct costs; and FAR 31.203, Indirect costs.

3. *Transportation.* Delete this cost principle in its entirety since an affirmative statement of allowability is unnecessary, and the allocation statement is already addressed at FAR 31.201–4, 31.202, and 31.203.

4. *Deferred research and development.* Delete the word ''deferred'' from the title to provide a more accurate description of the scope of this cost principle. Costs that are unallowable under this cost principle are unallowable regardless of whether they are charged in the current accounting period or deferred to a future accounting period.

This is not a significant regulatory action and, therefore, was not subject to review under Section 6(b) of Executive Order 12866, Regulatory Planning and Review, dated September 30, 1993. This rule is not a major rule under 5 U.S.C. 804.

B. Regulatory Flexibility Act

The Councils do not expect this proposed rule to have a significant economic impact on a substantial number of small entities within the meaning of the Regulatory Flexibility Act, 5 U.S.C. 601, *et seq.*, because most—contracts awarded to small entities use simplified acquisition procedures or are awarded on a competitive, fixed-price basis, and do not require application of the cost principles discussed in this rule. An Initial Regulatory Flexibility Analysis has, therefore, not been performed. We invite comments from small businesses and other interested parties. The Councils will consider comments from small entities concerning the affected FAR Parts 2, 31, 47, and 52 in accordance with 5 U.S.C. 610. Interested parties must submit such comments separately and should cite 5 U.S.C. 601, *et seq.* (FAR case 2001–029), in correspondence.

C. Paperwork Reduction Act

The Paperwork Reduction Act does not apply because the proposed changes to the FAR do not impose information collection requirements that require the approval of the Office of Management and Budget under 44 U.S.C. 3501, *et seq.*

List of Subjects in 48 CFR Parts 2, 31, 47, and 52

Government procurement.

Dated: March 8, 2002.

Al Matera,

Director, Acquisition Policy Division.

Therefore, DoD, GSA, and NASA propose amending 48 CFR parts 2, 31, 47, and 52 as set forth below:

1. The authority citation for 48 CFR parts 2, 31, 47, and 52 continues to read as follows:

Authority: 40 U.S.C. 486(c); 10 U.S.C. chapter 137; and 42 U.S.C. 2473(c).

PART 2—DEFINITIONS OF WORDS AND TERMS

2. In section 2.101 add the definition, in alphabetical order, ''Facilities capital cost of money'' to read as follows:

2.101 Definitions.

* * * * *

Facilities capital cost of money means ''cost of money as an element of the cost of facilities capital'' as used at 48 CFR 9904.414, Cost accounting standard-cost of money as an element of the cost of facilities capital.

* * * * *

PART 31—CONTRACT COST PRINCIPLES AND PROCEDURES

31.001 [Amended]

3. In section 31.001, remove the definitions ''Cost of capital committed to facilities'' and ''facilities capital.''

4. Revise section 31.205–10 to read as follows:

31.205–10 Cost of money.

(a) *General.* Cost of money—

(1) Is an imputed cost that is not a form of interest on borrowings (see 31.205–20);

(2) Is an ''incurred cost'' for cost-reimbursement purposes under applicable cost-reimbursement contracts and for progress payment purposes under fixed-price contracts; and

(3) Refers to—

(i) Facilities capital cost of money (48 CFR 9904.414); and

(ii) Cost of money as an element of the cost of capital assets under construction (48 CFR 9904.417).

(b) Cost of money is allowable provided—

(1) It is measured, assigned, and allocated to contracts in accordance with 48 CFR 9904.414 or 48 CFR 9904.417, as applicable;

(2) The requirements of 31.205–52, which limit the allowability of cost of money, are followed; and

(3) The estimated facilities capital cost of money is specifically identified and proposed in cost proposals relating to the contract under which the cost is to be claimed.

(c) Actual interest cost in lieu of the calculated imputed cost of money is unallowable.

5. In section 31.205–28, revise the introductory text to read as follows:

31.205–28 Other business expenses.

The following types of recurring costs are allowable:

* * * * *

31.205–45 [Reserved]

6. Remove and reserve section 31.205–45.

31.205–48 Research and development costs.

7. Revise the section heading of section 31.205–48, as set forth above; and remove ''section'' and add ''subsection'' in its place.

PART 47—TRANSPORTATION

8. In section 47.300, revise the introductory text of paragraph (b) to read as follows:

47.300 Scope of subpart.

* * * * *

(b) If a special requirement exists for application of any of these terms and conditions to other types of contracts; *e.g.,* cost-reimbursement contracts, for which transportation arrangements are normally the responsibility of the contractor and transportation costs are allowable, the contracting officer must use the terms and conditions prescribed in this subpart as a guide for—

* * * * *

PART 52—SOLICITATION PROVISIONS AND CONTRACT CLAUSES

9. In section 52.215–16, revise the date of the provision and paragraph (a) to read as follows:

52.215–16 Facilities Capital Cost of Money.

* * * * *

Facilities Capital Cost of Money (May 2002)

(a) Facilities capital cost of money will be an allowable cost under the contemplated contract, if the criteria for allowability in FAR 31.205–10(b) are met. One of the allowability criteria requires the prospective contractor to propose facilities capital cost of money in its offer.

* * * * *

[FR Doc. 02–6107 Filed 3–19–02; 8:45 am]

BILLING CODE 6820–EP–P

Federal Register

Wednesday,
March 20, 2002

Part III

Department of Defense
General Services Administration
National Aeronautics and Space Administration

48 CFR Parts 2, 31, 47, and 52

Federal Acquisition Regulation; Miscellaneous Cost Principles; Proposed Rule

DEPARTMENT OF DEFENSE

GENERAL SERVICES ADMINISTRATION

NATIONAL AERONAUTICS AND SPACE ADMINISTRATION

48 CFR Parts 2, 31, 47, and 52

[FAR Case 2001–029]

RIN: 9000–AJ33

Federal Acquisition Regulation; Miscellaneous Cost Principles

AGENCIES: Department of Defense (DoD), General Services Administration (GSA), and National Aeronautics and Space Administration (NASA).

ACTION: Proposed rule.

SUMMARY: The Civilian Agency Acquisition Council and the Defense Acquisition Regulations Council (Councils) are proposing to amend the Federal Acquisition Regulation (FAR) to delete the cost principle concerning transportation costs, and to revise the cost principles concerning cost of money, other business expenses, and deferred research and development costs.

DATES: Interested parties should submit comments in writing on or before May 20, 2002 to be considered in the formulation of a final rule.

ADDRESSES: Submit written comments to: General Services Administration, FAR Secretariat (MVP), 1800 F Street, NW, Room 4035, ATTN: Laurie Duarte, Washington, DC 20405.

Submit electronic comments via the Internet to: *farcase.2001–029@gsa.gov.* Please submit comments only and cite FAR case 2001–029 in all correspondence related to this case.

FOR FURTHER INFORMATION CONTACT: The FAR Secretariat, Room 4035, GS Building, Washington, DC, 20405, at (202) 501–4755 for information pertaining to status or publication schedules. For clarification of content, contact Jeremy Olson, at (202) 501–3221. Please cite FAR case 2001–029.

SUPPLEMENTARY INFORMATION:

A. Background

The Councils are proposing the following changes related to the cost principles at FAR 31.205–10, Cost of money; FAR 31.205–28, Other business expenses; FAR 31.205–45, Transportation costs; and FAR 31.205–48, Deferred research and development costs:

1. *Cost of money.* Revise the cost principle by deleting—

a. Portions of the current FAR 31.205–10(a)(i) and (a)(ii) that duplicate 48 CFR 9904.414, Cost Accounting Standard-Cost of Money as an Element of the Cost of Facilities Capital;

b. FAR 31.205–10(a)(2)(ii), (a)(3), and (b)(3), because these paragraphs duplicate the recordkeeping requirements at 31.201–2(d); and

c. The definitions of ''Cost of capital committed to facilities'' and ''facilities capital'' from FAR 31.001, Definitions, since these terms are not used elsewhere in the FAR. In addition, add a definition to FAR 2.101, Definitions, for the term ''facilities capital cost of money'' which is used in several places in the FAR.

2. *Other business expenses.* Delete the term ''when allocated on an equitable basis'' from FAR 31.205–28. It is unnecessary to repeat the requirement for allocation in this cost principle since it is already addressed at FAR 31.201–4, Determining allocability; FAR 31.202, Direct costs; and FAR 31.203, Indirect costs.

3. *Transportation.* Delete this cost principle in its entirety since an affirmative statement of allowability is unnecessary, and the allocation statement is already addressed at FAR 31.201–4, 31.202, and 31.203.

4. *Deferred research and development.* Delete the word ''deferred'' from the title to provide a more accurate description of the scope of this cost principle. Costs that are unallowable under this cost principle are unallowable regardless of whether they are charged in the current accounting period or deferred to a future accounting period.

This is not a significant regulatory action and, therefore, was not subject to review under Section 6(b) of Executive Order 12866, Regulatory Planning and Review, dated September 30, 1993. This rule is not a major rule under 5 U.S.C. 804.

B. Regulatory Flexibility Act

The Councils do not expect this proposed rule to have a significant economic impact on a substantial number of small entities within the meaning of the Regulatory Flexibility Act, 5 U.S.C. 601, *et seq.*, because most—contracts awarded to small entities use simplified acquisition procedures or are awarded on a competitive, fixed-price basis, and do not require application of the cost principles discussed in this rule. An Initial Regulatory Flexibility Analysis has, therefore, not been performed. We invite comments from small businesses and other interested parties. The Councils will consider comments from small entities concerning the affected FAR Parts 2, 31, 47, and 52 in accordance with 5 U.S.C. 610. Interested parties must submit such comments separately and should cite 5 U.S.C. 601, *et seq.* (FAR case 2001–029), in correspondence.

C. Paperwork Reduction Act

The Paperwork Reduction Act does not apply because the proposed changes to the FAR do not impose information collection requirements that require the approval of the Office of Management and Budget under 44 U.S.C. 3501, *et seq.*

List of Subjects in 48 CFR Parts 2, 31, 47, and 52

Government procurement.

Dated: March 8, 2002.

Al Matera,

Director, Acquisition Policy Division.

Therefore, DoD, GSA, and NASA propose amending 48 CFR parts 2, 31, 47, and 52 as set forth below:

1. The authority citation for 48 CFR parts 2, 31, 47, and 52 continues to read as follows:

Authority: 40 U.S.C. 486(c); 10 U.S.C. chapter 137; and 42 U.S.C. 2473(c).

PART 2—DEFINITIONS OF WORDS AND TERMS

2. In section 2.101 add the definition, in alphabetical order, ''Facilities capital cost of money'' to read as follows:

2.101 Definitions.

* * * * *

Facilities capital cost of money means ''cost of money as an element of the cost of facilities capital'' as used at 48 CFR 9904.414, Cost accounting standard-cost of money as an element of the cost of facilities capital.

* * * * *

PART 31—CONTRACT COST PRINCIPLES AND PROCEDURES

31.001 [Amended]

3. In section 31.001, remove the definitions ''Cost of capital committed to facilities'' and ''facilities capital.''

4. Revise section 31.205–10 to read as follows:

31.205–10 Cost of money.

(a) *General.* Cost of money—

(1) Is an imputed cost that is not a form of interest on borrowings (see 31.205–20);

(2) Is an ''incurred cost'' for cost-reimbursement purposes under applicable cost-reimbursement contracts and for progress payment purposes under fixed-price contracts; and

(3) Refers to—

(i) Facilities capital cost of money (48 CFR 9904.414); and

(ii) Cost of money as an element of the cost of capital assets under construction (48 CFR 9904.417).

(b) Cost of money is allowable provided—

(1) It is measured, assigned, and allocated to contracts in accordance with 48 CFR 9904.414 or 48 CFR 9904.417, as applicable;

(2) The requirements of 31.205–52, which limit the allowability of cost of money, are followed; and

(3) The estimated facilities capital cost of money is specifically identified and proposed in cost proposals relating to the contract under which the cost is to be claimed.

(c) Actual interest cost in lieu of the calculated imputed cost of money is unallowable.

5. In section 31.205–28, revise the introductory text to read as follows:

31.205–28 Other business expenses.

The following types of recurring costs are allowable:

* * * * *

31.205–45 [Reserved]

6. Remove and reserve section 31.205–45.

31.205–48 Research and development costs.

7. Revise the section heading of section 31.205–48, as set forth above; and remove ''section'' and add ''subsection'' in its place.

PART 47—TRANSPORTATION

8. In section 47.300, revise the introductory text of paragraph (b) to read as follows:

47.300 Scope of subpart.

* * * * *

(b) If a special requirement exists for application of any of these terms and conditions to other types of contracts; *e.g.,* cost-reimbursement contracts, for which transportation arrangements are normally the responsibility of the contractor and transportation costs are allowable, the contracting officer must use the terms and conditions prescribed in this subpart as a guide for—

* * * * *

PART 52—SOLICITATION PROVISIONS AND CONTRACT CLAUSES

9. In section 52.215–16, revise the date of the provision and paragraph (a) to read as follows:

52.215–16 Facilities Capital Cost of Money.

* * * * *

Facilities Capital Cost of Money (May 2002)

(a) Facilities capital cost of money will be an allowable cost under the contemplated contract, if the criteria for allowability in FAR 31.205–10(b) are met. One of the allowability criteria requires the prospective contractor to propose facilities capital cost of money in its offer.

* * * * *

[FR Doc. 02–6107 Filed 3–19–02; 8:45 am]

BILLING CODE 6820–EP–P

Federal Register

Wednesday,
March 20, 2002

Part IV

Department of Defense
General Services Administration
National Aeronautics and Space Administration

48 CFR Part 52

Federal Acquisition Regulation; Contract Terms and Conditions Required To Implement Statute or Executive Orders—Commercial Items; Proposed Rule

DEPARTMENT OF DEFENSE

GENERAL SERVICES ADMINISTRATION

NATIONAL AERONAUTICS AND SPACE ADMINISTRATION

48 CFR Part 52

[FAR Case 2000–009]

RIN 9000–AJ34

Federal Acquisition Regulation; Contract Terms and Conditions Required To Implement Statute or Executive Orders—Commercial Items

AGENCIES: Department of Defense (DoD), General Services Administration (GSA), and National Aeronautics and Space Administration (NASA).

ACTION: Proposed rule.

SUMMARY: The Civilian Agency Acquisition Council and the Defense Acquisition Regulations Council (Councils) are proposing to amend the Federal Acquisition Regulation (FAR) to update the clause regarding contract terms and conditions required to implement statute or Executive orders—commercial items.

DATES: Interested parties should submit comments in writing on or before May 20, 2002 to be considered in the formulation of a final rule.

ADDRESSES: Submit written comments to: General Services Administration, FAR Secretariat (MVP), 1800 F Street, NW. Room 4035, ATTN: Laurie Duarte, Washington, DC 20405.

Submit electronic comments via the Internet to: *farcase.2000–009@gsa.gov.* Please submit comments only and cite FAR case 2000–009 in all correspondence related to this case.

FOR FURTHER INFORMATION CONTACT: The FAR Secretariat, Room 4035, GS Building, Washington, DC., 20405, at (202) 501–4755 for information pertaining to status or publication schedules. For clarification of content, contact Ms. Victoria Moss, Procurement Analyst, at (202) 501–4764. Please cite FAR case 2000–009.

SUPPLEMENTARY INFORMATION:

A. Background

Federal Acquisition Regulation Part 12, Acquisition of Commercial Items, was developed to implement Title VIII of the Federal Acquisition Streamlining Act of 1994 (FASA) (Pub. L. 103–355). The regulations became effective on October 1, 1995. Several areas have been identified that need updating and clarification. This rule addresses some of those changes.

The list of contract terms and conditions required to implement statutes or Executive orders in the clause at FAR 52.212–5 is amended to ensure that required statutes enacted subsequent to FASA that contain civil or criminal penalties or specifically cite their applicability to commercial items are included on the list, and to ensure that any post-FASA items that did not meet this criteria are deleted from the list. In addition, the pre-FASA clauses and alternates that were inadvertently left off the list are added. The date of each clause is added to the list to identify what revision of the listed clause applies when this clause is added to a contract.

This is not a significant regulatory action and, therefore, was not subject to review under Section 6(b) of Executive Order 12866, Regulatory Planning and Review, dated September 30, 1993. This rule is not a major rule under 5 U.S.C. 804.

B. Regulatory Flexibility Act

The Councils do not expect this proposed rule to have a significant economic impact on a substantial number of small entities within the meaning of the Regulatory Flexibility Act, 5 U.S.C. 601, *et seq.*, because the rule merely clarifies existing language and does not change existing policy. An Initial Regulatory Flexibility Analysis has, therefore, not been performed. We invite comments from small businesses and other interested parties. The Councils will consider comments from small entities concerning the affected FAR Part 52 in accordance with 5 U.S.C. 610. Interested parties must submit such comments separately and should cite 5 U.S.C. 601, *et seq.* (FAR case 2000–009), in correspondence.

C. Paperwork Reduction Act

The Paperwork Reduction Act does not apply because the proposed changes to the FAR do not impose information collection requirements that require the approval of the Office of Management and Budget under 44 U.S.C. 3501, *et seq.*

List of Subjects in 48 CFR Part 52

Government procurement.

Dated: March 13, 2002.

Al Matera,

Director, Acquisition Policy Division.

Therefore, DoD, GSA, and NASA propose amending 48 CFR part 52 set forth below:

PART 52—SOLICITATION PROVISIONS AND CONTRACT CLAUSES

1. The authority citation for 48 CFR part 52 continues to read as follows:

Authority: 40 U.S.C. 486(c); 10 U.S.C. chapter 137; and 42 U.S.C. 2473(c).

2. Amend section 52.212–5 by revising the date of the clause and paragraphs (a), (b), (c), and (e) to read as follows:

52.212–5 Contract Terms and Conditions Required to Implement Statutes or Executive Orders—Commercial Items.

* * * * *

Contract Terms and Conditions Required To Implement Statutes or Executive Orders Commercial Items (Date)

(a) The Contractor agrees to comply with the following Federal Acquisition Regulation (FAR) clause, which is incorporated in this contract by reference, to implement provisions of law or Executive orders applicable to acquisitions of commercial items: 52.233–3, Protest After Award (AUG 1996) (31 U.S.C. 3553).

(b) The Contractor agrees to comply with the FAR clauses in this paragraph (b) that the Contracting Officer has indicated as being incorporated in this contract by reference to implement provisions of law or Executive orders applicable to acquisitions of commercial items:

[*Contracting Officer check as appropriate.*]

__ (1) 52.203–6, Restrictions on Subcontractor Sales to the Government (Jul 1995), with Alternate I (Oct 1995) (41 U.S.C. 253g and 10 U.S.C. 2402).

__ (2) 52.219–3, Notice of Total HUBZone Set-Aside (Jan 1999) (15 U.S.C. 657a).

__ (3) 52.219–4, Notice of Price Evaluation Preference for HUBZone Small Business Concerns (Jan 1999) (if the offeror elects to waive the preference, it shall so indicate in its offer) (15 U.S.C. 657a).

__ (4)(i) 52.219–5, Very Small Business Set-Aside (Mar 1999) (Pub. L. 103–403, section 304, Small Business Reauthorization and Amendments Act of 1994).

__ (ii) Alternate I to 52.219–5 (Mar 1999).

__ (iii) Alternate II to 52.219–5 (Mar 1999).

__ (5)(i) 52.219–6, Notice of Total Small Business Set-Aside (Jul 1996) (15 U.S.C. 644).

__ (ii) Alternate I to 52.219–6 (Oct 1995).

__ (6)(i) 52.219–7, Notice of Partial Small Business Set-Aside (Jul 1996) (15 U.S.C. 644).

__ (ii) Alternate I to 52.219–7 (Oct 1995).

__ (7) 52.219–8, Utilization of Small Business Concerns (Oct 2000) (15 U.S.C. 637(d)(2) and (3)).

__ (8)(i) 52.219–9, Small Business Subcontracting Plan (Jan 2002) (15 U.S.C. 637(d)(4)).

__ (ii) Alternate I to 52.219–9 (Oct 2001).

__ (iii) Alternate II to 52.219–9 (Oct 2001).

__ (9) 52.219–14, Limitations on Subcontracting (Dec 1996) (15 U.S.C. 637(a)(14)).

__ (10)(i) 52.219–23, Notice of Price Evaluation Adjustment for Small

Disadvantaged Business Concerns (May 2001) (Pub. L. 103–355, section 7102, and 10 U.S.C. 2323) (if the offeror elects to waive the adjustment, it shall so indicate in its offer).

__ (ii) Alternate I to 52.219–23 (Oct 1998).

__ (11) 52.219–25, Small Disadvantaged Business Participation Program Disadvantaged Status and Reporting (Oct 1999) (Pub. L. 103–355, section 7102, and 10 U.S.C. 2323).

__ (12) 52.219–26, Small Disadvantaged Business Participation Program Incentive Subcontracting (Oct 2000) (Pub. L. 103–355, section 7102, and 10 U.S.C. 2323).

__ (13) 52.222–3, Convict Labor (Aug 1996) (E.O. 11755).

__ (14) 52.222–19, Child Labor—Cooperation with Authorities and Remedies (Dec 2001) (E.O. 13126).

__ (15) 52.222–21, Prohibition of Segregated Facilities (Feb 1999).

__ (16) 52.222–26, Equal Opportunity (Feb 1999) (E.O. 11246).

__ (17) 52.222–35, Equal Opportunity for Special Disabled Veterans, Veterans of the Vietnam Era, and Other Eligible Veterans (Dec 2001) (38 U.S.C. 4212).

__ (18) 52.222–36, Affirmative Action for Workers with Disabilities (Jun 1998) (29 U.S.C. 793).

__ (19) 52.222–37, Employment Reports on Special Disabled Veterans, Veterans of the Vietnam Era, and Other Eligible Veterans (Dec 2001) (38 U.S.C. 4212).

__ (20)(i) 52.223–9, Estimate of Percentage of Recovered Material Content for EPA-Designated Products (Aug 2000) (42 U.S.C. 6962(c)(3)(A)(ii)).

__ (ii) Alternate I to 52.223–9 (Aug 2000) (42 U.S.C. 6962(i)(2)(C)).

__ (21) 52.225–1, Buy American Act—Balance of Payments Program—Supplies (Feb 2002) (41 U.S.C. 10a–10d).

__ (22)(i) 52.225–3, Buy American Act—North American Free Trade Agreement—Israeli Trade Act—Balance of Payments Program (Feb 2002) (41 U.S.C. 10a–10d, 19 U.S.C. 3301 note, 19 U.S.C. 2112 note).

__ (ii) Alternate I to 52.225–3 (Feb 2000).

__ (iii) Alternate II to 52.225–3 (Feb 2000).

__ (23) 52.225–5, Trade Agreements (Feb 2002) (19 U.S.C. 2501, *et seq.*, 19 U.S.C. 3301 note).

__ (24) 52.225–13, Restriction on Certain Foreign Purchases (Jul 2000) (E.O. 12722, 12724, 13059, 13067, 13121, and 13129).

__ (25) 52.225–15, Sanctioned European Union Country End Products (Feb 2000) (E.O. 12849).

__ (26) 52.225–16, Sanctioned European Union Country Services (Feb 2000) (E.O. 12849).

__ (27) 52.232–29, Terms for Financing of Purchases of Commercial Items (Feb 2002) (41 U.S.C. 255(f), 10 U.S.C. 2307(f)).

__ (28) 52.232–30, Installment Payments for Commercial Items (Oct 1995) (41 U.S.C. 255(f), 10 U.S.C. 2307(f)).

__ (29) 52.232–33, Payment by Electronic Funds Transfer—Central Contractor Registration (May 1999) (31 U.S.C. 3332).

__ (30) 52.232–34, Payment by Electronic Funds Transfer Other than Central Contractor Registration (May 1999) (31 U.S.C. 3332).

__ (31) 52.232–36, Payment by Third Party (May 1999) (31 U.S.C. 3332).

__ (32) 52.239–1, Privacy or Security Safeguards (Aug 1996) (5 U.S.C. 552a).

__ (33)(i) 52.247–64, Preference for Privately Owned U.S.-Flag Commercial Vessels (Jun 2000) (46 U.S.C. Appx 1241).

__ (ii) Alternate I to 52.247–64 (Apr 1984).

(c) The Contractor agrees to comply with the FAR clauses in this paragraph (c), applicable to commercial services, that the Contracting Officer has indicated as being incorporated in this contract by reference to implement provisions of law or Executive orders applicable to acquisitions of commercial items:

Contracting Officer check as appropriate.

__ (1) 52.222–41, Service Contract Act of 1965, as Amended (May 1989) (41 U.S.C. 351, *et seq.*).

__ (2) 52.222–42, Statement of Equivalent Rates for Federal Hires (May 1989) (29 U.S.C. 206 and 41 U.S.C. 351, *et seq.*).

__ (3) 52.222–43, Fair Labor Standards Act and Service Contract Act—Price Adjustment (Multiple Year and Option Contracts) (May 1989) (29 U.S.C. 206 and 41 U.S.C. 351, *et seq.*).

__ (4) 52.222–44, Fair Labor Standards Act and Service Contract Act—Price Adjustment (Feb 2002) (29 U.S.C. 206 and 41 U.S.C. 351, *et seq.*).

__ (5) 52.222–47, SCA Minimum Wages and Fringe Benefits Applicable to Successor Contract Pursuant to Predecessor Contractor Collective Bargaining Agreements (CBA) (May 1989) (41 U.S.C. 351, *et seq.*).

* * * * *

(e) The following clauses must be included in subcontracts:

(1) 52.219–8, Utilization of Small Business Concerns (Oct 2000) (15 U.S.C. 637(d)(2) and (3)), in all subcontracts that offer further subcontracting opportunities. If the subcontract (except subcontracts to small business concerns) exceeds $500,000 ($1,000,000 for construction of any public facility), the subcontractor must include 52.219–8 in lower tier subcontracts that offer subcontracting opportunities.

(2) 52.222–26, Equal Opportunity (Feb 1999) (E.O. 11246).

(3) 52.222–35, Equal Opportunity for Disabled Special Veterans, Veterans of the Vietnam Era, and Other Eligible Veterans (Dec 2001) (38 U.S.C. 4212(a)).

(4) 52.222–36, Affirmative Action for Workers with Disabilities (Jun 1998) (29 U.S.C. 793).

(5) 52.222–41, Service Contract Act of 1965, as Amended (May 1989) (41 U.S.C. 351, *et seq.*).

(6) 52.247–64, Preference for Privately Owned U.S.-Flag Commercial Vessels (Jun 2000) (46 U.S.C. Appx 1241) (flowdown not required for subcontracts awarded beginning May 1, 1996).

While not required, a prime contractor may include in its subcontracts a minimal number of additional clauses necessary to satisfy its contractual obligations.

(End of clause)

* * * * *

[FR Doc. 02–6514 Filed 3–19–02; 8:45 am]

BILLING CODE 6820–EP–P

Federal Register

Wednesday,
March 20, 2002

Part IV

Department of Defense
General Services Administration
National Aeronautics and Space Administration

48 CFR Part 52

Federal Acquisition Regulation; Contract Terms and Conditions Required To Implement Statute or Executive Orders—Commercial Items; Proposed Rule

DEPARTMENT OF DEFENSE

GENERAL SERVICES ADMINISTRATION

NATIONAL AERONAUTICS AND SPACE ADMINISTRATION

48 CFR Part 52

[FAR Case 2000–009]

RIN 9000–AJ34

Federal Acquisition Regulation; Contract Terms and Conditions Required To Implement Statute or Executive Orders—Commercial Items

AGENCIES: Department of Defense (DoD), General Services Administration (GSA), and National Aeronautics and Space Administration (NASA).

ACTION: Proposed rule.

SUMMARY: The Civilian Agency Acquisition Council and the Defense Acquisition Regulations Council (Councils) are proposing to amend the Federal Acquisition Regulation (FAR) to update the clause regarding contract terms and conditions required to implement statute or Executive orders—commercial items.

DATES: Interested parties should submit comments in writing on or before May 20, 2002 to be considered in the formulation of a final rule.

ADDRESSES: Submit written comments to: General Services Administration, FAR Secretariat (MVP), 1800 F Street, NW. Room 4035, ATTN: Laurie Duarte, Washington, DC 20405.

Submit electronic comments via the Internet to: *farcase.2000–009@gsa.gov.* Please submit comments only and cite FAR case 2000–009 in all correspondence related to this case.

FOR FURTHER INFORMATION CONTACT: The FAR Secretariat, Room 4035, GS Building, Washington, DC., 20405, at (202) 501–4755 for information pertaining to status or publication schedules. For clarification of content, contact Ms. Victoria Moss, Procurement Analyst, at (202) 501–4764. Please cite FAR case 2000–009.

SUPPLEMENTARY INFORMATION:

A. Background

Federal Acquisition Regulation Part 12, Acquisition of Commercial Items, was developed to implement Title VIII of the Federal Acquisition Streamlining Act of 1994 (FASA) (Pub. L. 103–355). The regulations became effective on October 1, 1995. Several areas have been identified that need updating and clarification. This rule addresses some of those changes.

The list of contract terms and conditions required to implement statutes or Executive orders in the clause at FAR 52.212–5 is amended to ensure that required statutes enacted subsequent to FASA that contain civil or criminal penalties or specifically cite their applicability to commercial items are included on the list, and to ensure that any post-FASA items that did not meet this criteria are deleted from the list. In addition, the pre-FASA clauses and alternates that were inadvertently left off the list are added. The date of each clause is added to the list to identify what revision of the listed clause applies when this clause is added to a contract.

This is not a significant regulatory action and, therefore, was not subject to review under Section 6(b) of Executive Order 12866, Regulatory Planning and Review, dated September 30, 1993. This rule is not a major rule under 5 U.S.C. 804.

B. Regulatory Flexibility Act

The Councils do not expect this proposed rule to have a significant economic impact on a substantial number of small entities within the meaning of the Regulatory Flexibility Act, 5 U.S.C. 601, *et seq.*, because the rule merely clarifies existing language and does not change existing policy. An Initial Regulatory Flexibility Analysis has, therefore, not been performed. We invite comments from small businesses and other interested parties. The Councils will consider comments from small entities concerning the affected FAR Part 52 in accordance with 5 U.S.C. 610. Interested parties must submit such comments separately and should cite 5 U.S.C. 601, *et seq.* (FAR case 2000–009), in correspondence.

C. Paperwork Reduction Act

The Paperwork Reduction Act does not apply because the proposed changes to the FAR do not impose information collection requirements that require the approval of the Office of Management and Budget under 44 U.S.C. 3501, *et seq.*

List of Subjects in 48 CFR Part 52

Government procurement.

Dated: March 13, 2002.

Al Matera,

Director, Acquisition Policy Division.

Therefore, DoD, GSA, and NASA propose amending 48 CFR part 52 set forth below:

PART 52—SOLICITATION PROVISIONS AND CONTRACT CLAUSES

1. The authority citation for 48 CFR part 52 continues to read as follows:

Authority: 40 U.S.C. 486(c); 10 U.S.C. chapter 137; and 42 U.S.C. 2473(c).

2. Amend section 52.212–5 by revising the date of the clause and paragraphs (a), (b), (c), and (e) to read as follows:

52.212–5 Contract Terms and Conditions Required to Implement Statutes or Executive Orders—Commercial Items.

* * * * *

Contract Terms and Conditions Required To Implement Statutes or Executive Orders Commercial Items (Date)

(a) The Contractor agrees to comply with the following Federal Acquisition Regulation (FAR) clause, which is incorporated in this contract by reference, to implement provisions of law or Executive orders applicable to acquisitions of commercial items: 52.233–3, Protest After Award (AUG 1996) (31 U.S.C. 3553).

(b) The Contractor agrees to comply with the FAR clauses in this paragraph (b) that the Contracting Officer has indicated as being incorporated in this contract by reference to implement provisions of law or Executive orders applicable to acquisitions of commercial items:

[*Contracting Officer check as appropriate.*]

__ (1) 52.203–6, Restrictions on Subcontractor Sales to the Government (Jul 1995), with Alternate I (Oct 1995) (41 U.S.C. 253g and 10 U.S.C. 2402).

__ (2) 52.219–3, Notice of Total HUBZone Set-Aside (Jan 1999) (15 U.S.C. 657a).

__ (3) 52.219–4, Notice of Price Evaluation Preference for HUBZone Small Business Concerns (Jan 1999) (if the offeror elects to waive the preference, it shall so indicate in its offer) (15 U.S.C. 657a).

__ (4)(i) 52.219–5, Very Small Business Set-Aside (Mar 1999) (Pub. L. 103–403, section 304, Small Business Reauthorization and Amendments Act of 1994).

__ (ii) Alternate I to 52.219–5 (Mar 1999).

__ (iii) Alternate II to 52.219–5 (Mar 1999).

__ (5)(i) 52.219–6, Notice of Total Small Business Set-Aside (Jul 1996) (15 U.S.C. 644).

__ (ii) Alternate I to 52.219–6 (Oct 1995).

__ (6)(i) 52.219–7, Notice of Partial Small Business Set-Aside (Jul 1996) (15 U.S.C. 644).

__ (ii) Alternate I to 52.219–7 (Oct 1995).

__ (7) 52.219–8, Utilization of Small Business Concerns (Oct 2000) (15 U.S.C. 637(d)(2) and (3)).

__ (8)(i) 52.219–9, Small Business Subcontracting Plan (Jan 2002) (15 U.S.C. 637(d)(4)).

__ (ii) Alternate I to 52.219–9 (Oct 2001).

__ (iii) Alternate II to 52.219–9 (Oct 2001).

__ (9) 52.219–14, Limitations on Subcontracting (Dec 1996) (15 U.S.C. 637(a)(14)).

__ (10)(i) 52.219–23, Notice of Price Evaluation Adjustment for Small

Disadvantaged Business Concerns (May 2001) (Pub. L. 103–355, section 7102, and 10 U.S.C. 2323) (if the offeror elects to waive the adjustment, it shall so indicate in its offer).

__ (ii) Alternate I to 52.219–23 (Oct 1998).

__ (11) 52.219–25, Small Disadvantaged Business Participation Program Disadvantaged Status and Reporting (Oct 1999) (Pub. L. 103–355, section 7102, and 10 U.S.C. 2323).

__ (12) 52.219–26, Small Disadvantaged Business Participation Program Incentive Subcontracting (Oct 2000) (Pub. L. 103–355, section 7102, and 10 U.S.C. 2323).

__ (13) 52.222–3, Convict Labor (Aug 1996) (E.O. 11755).

__ (14) 52.222–19, Child Labor—Cooperation with Authorities and Remedies (Dec 2001) (E.O. 13126).

__ (15) 52.222–21, Prohibition of Segregated Facilities (Feb 1999).

__ (16) 52.222–26, Equal Opportunity (Feb 1999) (E.O. 11246).

__ (17) 52.222–35, Equal Opportunity for Special Disabled Veterans, Veterans of the Vietnam Era, and Other Eligible Veterans (Dec 2001) (38 U.S.C. 4212).

__ (18) 52.222–36, Affirmative Action for Workers with Disabilities (Jun 1998) (29 U.S.C. 793).

__ (19) 52.222–37, Employment Reports on Special Disabled Veterans, Veterans of the Vietnam Era, and Other Eligible Veterans (Dec 2001) (38 U.S.C. 4212).

__ (20)(i) 52.223–9, Estimate of Percentage of Recovered Material Content for EPA-Designated Products (Aug 2000) (42 U.S.C. 6962(c)(3)(A)(ii)).

__ (ii) Alternate I to 52.223–9 (Aug 2000) (42 U.S.C. 6962(i)(2)(C)).

__ (21) 52.225–1, Buy American Act—Balance of Payments Program—Supplies (Feb 2002) (41 U.S.C. 10a–10d).

__ (22)(i) 52.225–3, Buy American Act—North American Free Trade Agreement—Israeli Trade Act—Balance of Payments Program (Feb 2002) (41 U.S.C. 10a–10d, 19 U.S.C. 3301 note, 19 U.S.C. 2112 note).

__ (ii) Alternate I to 52.225–3 (Feb 2000).

__ (iii) Alternate II to 52.225–3 (Feb 2000).

__ (23) 52.225–5, Trade Agreements (Feb 2002) (19 U.S.C. 2501, *et seq.*, 19 U.S.C. 3301 note).

__ (24) 52.225–13, Restriction on Certain Foreign Purchases (Jul 2000) (E.O. 12722, 12724, 13059, 13067, 13121, and 13129).

__ (25) 52.225–15, Sanctioned European Union Country End Products (Feb 2000) (E.O. 12849).

__ (26) 52.225–16, Sanctioned European Union Country Services (Feb 2000) (E.O. 12849).

__ (27) 52.232–29, Terms for Financing of Purchases of Commercial Items (Feb 2002) (41 U.S.C. 255(f), 10 U.S.C. 2307(f)).

__ (28) 52.232–30, Installment Payments for Commercial Items (Oct 1995) (41 U.S.C. 255(f), 10 U.S.C. 2307(f)).

__ (29) 52.232–33, Payment by Electronic Funds Transfer—Central Contractor Registration (May 1999) (31 U.S.C. 3332).

__ (30) 52.232–34, Payment by Electronic Funds Transfer Other than Central Contractor Registration (May 1999) (31 U.S.C. 3332).

__ (31) 52.232–36, Payment by Third Party (May 1999) (31 U.S.C. 3332).

__ (32) 52.239–1, Privacy or Security Safeguards (Aug 1996) (5 U.S.C. 552a).

__ (33)(i) 52.247–64, Preference for Privately Owned U.S.-Flag Commercial Vessels (Jun 2000) (46 U.S.C. Appx 1241).

__ (ii) Alternate I to 52.247–64 (Apr 1984).

(c) The Contractor agrees to comply with the FAR clauses in this paragraph (c), applicable to commercial services, that the Contracting Officer has indicated as being incorporated in this contract by reference to implement provisions of law or Executive orders applicable to acquisitions of commercial items:

Contracting Officer check as appropriate.

__ (1) 52.222–41, Service Contract Act of 1965, as Amended (May 1989) (41 U.S.C. 351, *et seq.*).

__ (2) 52.222–42, Statement of Equivalent Rates for Federal Hires (May 1989) (29 U.S.C. 206 and 41 U.S.C. 351, *et seq.*).

__ (3) 52.222–43, Fair Labor Standards Act and Service Contract Act—Price Adjustment (Multiple Year and Option Contracts) (May 1989) (29 U.S.C. 206 and 41 U.S.C. 351, *et seq.*).

__ (4) 52.222–44, Fair Labor Standards Act and Service Contract Act—Price Adjustment (Feb 2002) (29 U.S.C. 206 and 41 U.S.C. 351, *et seq.*).

__ (5) 52.222–47, SCA Minimum Wages and Fringe Benefits Applicable to Successor Contract Pursuant to Predecessor Contractor Collective Bargaining Agreements (CBA) (May 1989) (41 U.S.C. 351, *et seq.*).

* * * * *

(e) The following clauses must be included in subcontracts:

(1) 52.219–8, Utilization of Small Business Concerns (Oct 2000) (15 U.S.C. 637(d)(2) and (3)), in all subcontracts that offer further subcontracting opportunities. If the subcontract (except subcontracts to small business concerns) exceeds $500,000 ($1,000,000 for construction of any public facility), the subcontractor must include 52.219–8 in lower tier subcontracts that offer subcontracting opportunities.

(2) 52.222–26, Equal Opportunity (Feb 1999) (E.O. 11246).

(3) 52.222–35, Equal Opportunity for Disabled Special Veterans, Veterans of the Vietnam Era, and Other Eligible Veterans (Dec 2001) (38 U.S.C. 4212(a)).

(4) 52.222–36, Affirmative Action for Workers with Disabilities (Jun 1998) (29 U.S.C. 793).

(5) 52.222–41, Service Contract Act of 1965, as Amended (May 1989) (41 U.S.C. 351, *et seq.*).

(6) 52.247–64, Preference for Privately Owned U.S.-Flag Commercial Vessels (Jun 2000) (46 U.S.C. Appx 1241) (flowdown not required for subcontracts awarded beginning May 1, 1996).

While not required, a prime contractor may include in its subcontracts a minimal number of additional clauses necessary to satisfy its contractual obligations.

(End of clause)

* * * * *

[FR Doc. 02–6514 Filed 3–19–02; 8:45 am]

BILLING CODE 6820–EP–P

Federal Register

Wednesday,
March 20, 2002

Part V

Department of Defense
General Services Administration
National Aeronautics and Space Administration

48 CFR Parts 25 and 52

Federal Acquisition Regulation; Prohibited Sources; Proposed Rule

DEPARTMENT OF DEFENSE

GENERAL SERVICES ADMINISTRATION

NATIONAL AERONAUTICS AND SPACE ADMINISTRATION

48 CFR Parts 25 and 52

[FAR Case 2001–015]

RIN: 9000–AJ35

Federal Acquisition Regulation; Prohibited Sources

AGENCIES: Department of Defense (DoD), General Services Administration (GSA), and National Aeronautics and Space Administration (NASA).

ACTION: Proposed rule.

SUMMARY: The Civilian Agency Acquisition Council and the Defense Acquisition Regulations Council (Councils) are proposing to amend the Federal Acquisition Regulation (FAR) to implement Executive Order 13192, Lifting and Modifying Measures With Respect to the Federal Republic of Yugoslavia (Serbia and Montenegro), and other regulations of the Department of the Treasury that enforce economic sanctions imposed by the President.

DATES: Interested parties should submit comments in writing on or before May 20, 2002 to be considered in the formulation of a final rule.

ADDRESSES: Submit written comments to: General Services Administration, FAR Secretariat (MVP), 1800 F Street, NW., Room 4035, ATTN: Laurie Duarte, Washington, DC 20405.

Submit electronic comments via the Internet to: *farcase.2001–015@gsa.gov.* Please submit comments only and cite FAR case 2001–015 in all correspondence related to this case.

FOR FURTHER INFORMATION CONTACT: The FAR Secretariat, Room 4035, GS Building, Washington, DC, 20405, at (202) 501–4755 for information pertaining to status or publication schedules. For clarification of content, contact Ms. Cecelia Davis, Procurement Analyst, at (202) 219–0202. Please cite FAR case 2001–015.

SUPPLEMENTARY INFORMATION:

A. Background

This rule amends FAR Subpart 25.7 and the clause at 52.225–13, Restrictions on Certain Foreign Purchases, to implement Executive Order 13192, Lifting and Modifying Measures With Respect to the Federal Republic of Yugoslavia (Serbia and Montenegro), and other regulations of the Department of the Treasury that enforce economic sanctions imposed by the President.

This proposed rule removes Serbia from the list of prohibited sources at FAR 25.701; slightly modifies the restrictions relating to acquisition of supplies or services from Cuba, Iran, Iraq, Libya, North Korea, Sudan, and the territory of Afghanistan controlled by the Taliban; and requires authorization by the Department of the Treasury for any exceptions to these prohibitions, even when purchased overseas for use overseas. In addition, the rule expands the prohibition against acquisition from entities controlled by the Government of Iraq or other specially designated nationals to include all blocked persons, and provides the Department of Treasury website for access to the list of Specially Designated Nationals and Blocked Persons.

This is not a significant regulatory action and, therefore, was not subject to review under Section 6(b) of Executive Order 12866, Regulatory Planning and Review, dated September 30, 1993. This rule is not a major rule under 5 U.S.C. 804.

B. Regulatory Flexibility Act

The Councils do not expect this proposed rule to have a significant economic impact on a substantial number of small entities within the meaning of the Regulatory Flexibility Act, 5 U.S.C. 601, *et seq.*, because the proposed amendments will only affect acquisitions from prohibited sources. An Initial Regulatory Flexibility Analysis has, therefore, not been performed. We invite comments from small businesses and other interested parties. The Councils will consider comments from small entities concerning the affected FAR Parts 25 and 52 in accordance with 5 U.S.C. 610. Interested parties must submit such comments separately and should cite 5 U.S.C. 601, *et seq.* (FAR case 2001–015), in correspondence.

C. Paperwork Reduction Act

The Paperwork Reduction Act does not apply because the proposed changes to the FAR do not impose information collection requirements that require the approval of the Office of Management and Budget under 44 U.S.C. 3501, *et seq.*

List of Subjects in 48 CFR Parts 25 and 52

Government procurement.

Dated: March 13, 2002.

Al Matera,

Director, Acquisition Policy Division.

Therefore, DoD, GSA, and NASA propose amending 48 CFR parts 25 and 52 as set forth below:

1. The authority citation for 48 CFR parts 25 and 52 continues to read as follows:

Authority: 40 U.S.C. 486(c); 10 U.S.C. chapter 137; and 42 U.S.C. 2473(c).

PART 25—FOREIGN ACQUISITION

2. Revise section 25.701 to read as follows:

25.701 Restrictions.

(a) Except as authorized by the Office of Foreign Assets Control (OFAC) in the Department of the Treasury, agencies and their contractors and subcontractors must not acquire any supplies or services, if any Executive order administered by OFAC, or the Foreign Assets Control regulations set forth at 31 CFR chapter V would prohibit such a transaction by a person subject to the jurisdiction of the United States.

(b) Most transactions involving Cuba, Iran, Iraq, Libya, Sudan and the Taliban-controlled regions of Afghanistan are prohibited, as are most imports into the United States from North Korea. In addition, lists of proscribed entities and individuals are included in OFAC's list of Specially Designated Nationals and Blocked Persons. More information about these restrictions is available in the Foreign Assets Control regulations at 31 CFR chapter V and on OFAC's website at *http://www.treas.gov/ofac.*

25.702 [Amended]

3. Amend section 25.702 by removing ''622–2520'' and adding ''622–2490'' in its place.

25.1103 [Amended]

4. Amend section 25.1103 in paragraph (a) by removing ''with a value exceeding $2,500''.

PART 52—SOLICITATION PROVISIONS AND CONTRACT CLAUSES

52.212–5 [Amended]

5. Amend section 52.212–5 by redesignating paragraph (b)(20) as (b)(21) and redesignating paragraph (b)(21) as (b)(20), and in newly designated paragraph (b)(21) by removing ''13121,''.

52.213–4 [Amended]

6. Amend section 52.213–4 in paragraph (a)(1)(ii) by removing ''13121,''.

7. Amend section 52.225–13 by revising the date of the clause and paragraphs (a) and (b) to read as follows:

52.225–13 Restrictions on Certain Foreign Purchases.

* * * * *

Restrictions on Certain Foreign Purchases (Date)

(a) Except as authorized by the Office of Foreign Assets Control in the Department of the Treasury, the Contractor shall not acquire, for use in the performance of this contract, any supplies or services, if any Executive order administered by the Office of Foreign Assets Control, or the Foreign Assets Control regulations set forth at 31 CFR chapter V would prohibit such a transaction by a person subject to the jurisdiction of the United States.

(b) Most transactions involving Cuba, Iran, Iraq, Libya, Sudan and the Taliban-controlled regions of Afghanistan are prohibited, as are most imports into the United States from North Korea. Lists of proscribed entities and individuals are included in OFAC's list of Specially Designated Nationals and Blocked Persons. More information about these restrictions is available in the Foreign Assets Control regulations at 31 CFR chapter V and on OFAC's website at http://www.treas.gov/ofac.

* * * * *

[FR Doc. 02–6515 Filed 3–19–02; 8:45 am]

BILLING CODE 6820–EP–P

Federal Register

Wednesday,
March 20, 2002

Part V

Department of Defense
General Services Administration
National Aeronautics and Space Administration

48 CFR Parts 25 and 52

Federal Acquisition Regulation; Prohibited Sources; Proposed Rule

DEPARTMENT OF DEFENSE

GENERAL SERVICES ADMINISTRATION

NATIONAL AERONAUTICS AND SPACE ADMINISTRATION

48 CFR Parts 25 and 52

[FAR Case 2001–015]

RIN: 9000–AJ35

Federal Acquisition Regulation; Prohibited Sources

AGENCIES: Department of Defense (DoD), General Services Administration (GSA), and National Aeronautics and Space Administration (NASA).

ACTION: Proposed rule.

SUMMARY: The Civilian Agency Acquisition Council and the Defense Acquisition Regulations Council (Councils) are proposing to amend the Federal Acquisition Regulation (FAR) to implement Executive Order 13192, Lifting and Modifying Measures With Respect to the Federal Republic of Yugoslavia (Serbia and Montenegro), and other regulations of the Department of the Treasury that enforce economic sanctions imposed by the President.

DATES: Interested parties should submit comments in writing on or before May 20, 2002 to be considered in the formulation of a final rule.

ADDRESSES: Submit written comments to: General Services Administration, FAR Secretariat (MVP), 1800 F Street, NW., Room 4035, ATTN: Laurie Duarte, Washington, DC 20405.

Submit electronic comments via the Internet to: *farcase.2001–015@gsa.gov.* Please submit comments only and cite FAR case 2001–015 in all correspondence related to this case.

FOR FURTHER INFORMATION CONTACT: The FAR Secretariat, Room 4035, GS Building, Washington, DC, 20405, at (202) 501–4755 for information pertaining to status or publication schedules. For clarification of content, contact Ms. Cecelia Davis, Procurement Analyst, at (202) 219–0202. Please cite FAR case 2001–015.

SUPPLEMENTARY INFORMATION:

A. Background

This rule amends FAR Subpart 25.7 and the clause at 52.225–13, Restrictions on Certain Foreign Purchases, to implement Executive Order 13192, Lifting and Modifying Measures With Respect to the Federal Republic of Yugoslavia (Serbia and Montenegro), and other regulations of the Department of the Treasury that enforce economic sanctions imposed by the President.

This proposed rule removes Serbia from the list of prohibited sources at FAR 25.701; slightly modifies the restrictions relating to acquisition of supplies or services from Cuba, Iran, Iraq, Libya, North Korea, Sudan, and the territory of Afghanistan controlled by the Taliban; and requires authorization by the Department of the Treasury for any exceptions to these prohibitions, even when purchased overseas for use overseas. In addition, the rule expands the prohibition against acquisition from entities controlled by the Government of Iraq or other specially designated nationals to include all blocked persons, and provides the Department of Treasury website for access to the list of Specially Designated Nationals and Blocked Persons.

This is not a significant regulatory action and, therefore, was not subject to review under Section 6(b) of Executive Order 12866, Regulatory Planning and Review, dated September 30, 1993. This rule is not a major rule under 5 U.S.C. 804.

B. Regulatory Flexibility Act

The Councils do not expect this proposed rule to have a significant economic impact on a substantial number of small entities within the meaning of the Regulatory Flexibility Act, 5 U.S.C. 601, *et seq.*, because the proposed amendments will only affect acquisitions from prohibited sources. An Initial Regulatory Flexibility Analysis has, therefore, not been performed. We invite comments from small businesses and other interested parties. The Councils will consider comments from small entities concerning the affected FAR Parts 25 and 52 in accordance with 5 U.S.C. 610. Interested parties must submit such comments separately and should cite 5 U.S.C. 601, *et seq.* (FAR case 2001–015), in correspondence.

C. Paperwork Reduction Act

The Paperwork Reduction Act does not apply because the proposed changes to the FAR do not impose information collection requirements that require the approval of the Office of Management and Budget under 44 U.S.C. 3501, *et seq.*

List of Subjects in 48 CFR Parts 25 and 52

Government procurement.

Dated: March 13, 2002.

Al Matera,

Director, Acquisition Policy Division.

Therefore, DoD, GSA, and NASA propose amending 48 CFR parts 25 and 52 as set forth below:

1. The authority citation for 48 CFR parts 25 and 52 continues to read as follows:

Authority: 40 U.S.C. 486(c); 10 U.S.C. chapter 137; and 42 U.S.C. 2473(c).

PART 25—FOREIGN ACQUISITION

2. Revise section 25.701 to read as follows:

25.701 Restrictions.

(a) Except as authorized by the Office of Foreign Assets Control (OFAC) in the Department of the Treasury, agencies and their contractors and subcontractors must not acquire any supplies or services, if any Executive order administered by OFAC, or the Foreign Assets Control regulations set forth at 31 CFR chapter V would prohibit such a transaction by a person subject to the jurisdiction of the United States.

(b) Most transactions involving Cuba, Iran, Iraq, Libya, Sudan and the Taliban-controlled regions of Afghanistan are prohibited, as are most imports into the United States from North Korea. In addition, lists of proscribed entities and individuals are included in OFAC's list of Specially Designated Nationals and Blocked Persons. More information about these restrictions is available in the Foreign Assets Control regulations at 31 CFR chapter V and on OFAC's website at *http://www.treas.gov/ofac.*

25.702 [Amended]

3. Amend section 25.702 by removing ''622–2520'' and adding ''622–2490'' in its place.

25.1103 [Amended]

4. Amend section 25.1103 in paragraph (a) by removing ''with a value exceeding $2,500''.

PART 52—SOLICITATION PROVISIONS AND CONTRACT CLAUSES

52.212–5 [Amended]

5. Amend section 52.212–5 by redesignating paragraph (b)(20) as (b)(21) and redesignating paragraph (b)(21) as (b)(20), and in newly designated paragraph (b)(21) by removing ''13121,''.

52.213–4 [Amended]

6. Amend section 52.213–4 in paragraph (a)(1)(ii) by removing ''13121,''.

7. Amend section 52.225–13 by revising the date of the clause and paragraphs (a) and (b) to read as follows:

52.225–13 Restrictions on Certain Foreign Purchases.

* * * * *

Restrictions on Certain Foreign Purchases (Date)

(a) Except as authorized by the Office of Foreign Assets Control in the Department of the Treasury, the Contractor shall not acquire, for use in the performance of this contract, any supplies or services, if any Executive order administered by the Office of Foreign Assets Control, or the Foreign Assets Control regulations set forth at 31 CFR chapter V would prohibit such a transaction by a person subject to the jurisdiction of the United States.

(b) Most transactions involving Cuba, Iran, Iraq, Libya, Sudan and the Taliban-controlled regions of Afghanistan are prohibited, as are most imports into the United States from North Korea. Lists of proscribed entities and individuals are included in OFAC's list of Specially Designated Nationals and Blocked Persons. More information about these restrictions is available in the Foreign Assets Control regulations at 31 CFR chapter V and on OFAC's website at http://www.treas.gov/ofac.

* * * * *

[FR Doc. 02–6515 Filed 3–19–02; 8:45 am]

BILLING CODE 6820–EP–P

Reader Aids

Federal Register

Vol. 67, No. 54

Wednesday, March 20, 2002

CUSTOMER SERVICE AND INFORMATION

Federal Register/Code of Federal Regulations

General Information, indexes and other finding aids	**202–523–5227**
Laws	**523–5227**
Presidential Documents	
Executive orders and proclamations	**523–5227**
The United States Government Manual	**523–5227**
Other Services	
Electronic and on-line services (voice)	**523–3447**
Privacy Act Compilation	**523–3187**
Public Laws Update Service (numbers, dates, etc.)	**523–6641**
TTY for the deaf-and-hard-of-hearing	**523–5229**

ELECTRONIC RESEARCH

World Wide Web

Full text of the daily Federal Register, CFR and other publications is located at: **http://www.access.gpo.gov/nara**

Federal Register information and research tools, including Public Inspection List, indexes, and links to GPO Access are located at: **http://www.nara.gov/fedreg**

E-mail

FEDREGTOC-L (Federal Register Table of Contents LISTSERV) is an open e-mail service that provides subscribers with a digital form of the Federal Register Table of Contents. The digital form of the Federal Register Table of Contents includes HTML and PDF links to the full text of each document.

To join or leave, go to **http://listserv.access.gpo.gov** and select *Online mailing list archives, FEDREGTOC-L, Join or leave the list (or change settings);* then follow the instructions.

PENS (Public Law Electronic Notification Service) is an e-mail service that notifies subscribers of recently enacted laws.

To subscribe, go to **http://hydra.gsa.gov/archives/publaws-l.html** and select *Join or leave the list* (or change settings); then follow the instructions.

FEDREGTOC-L and **PENS** are mailing lists only. We cannot respond to specific inquiries.

Reference questions. Send questions and comments about the Federal Register system to: **info@fedreg.nara.gov**

The Federal Register staff cannot interpret specific documents or regulations.

FEDERAL REGISTER PAGES AND DATE, MARCH

9389–9580 1
9581–9888 4
9889–10098 5
10099–10318 6
10319–10598 7
10599–10826 8
10827–11030 11
11031–11210 12
11211–11382 13
11383–11554 14
11555–11888 15
11889–12440 18
12441–12828 19
12829–13082 20

CFR PARTS AFFECTED DURING MARCH

At the end of each month, the Office of the Federal Register publishes separately a List of CFR Sections Affected (LSA), which lists parts and sections affected by documents published since the revision date of each title.

3 CFR

Proclamations:
7525 10311
7526 10313
7527 10315
7528 10317
7529 10553
7530 10825
7531 11381
7532 12441

Executive Orders:
12170 11553
12957 11553
12959 11553
13059 11553

Administrative Orders:
Presidential Determinations:
No. 2002-07 of February 23, 2002 9889
No. 2002-08 of March 4, 2002 10599
Memorandums:
Memorandum of March 5, 2002 10593
Notices:
Notice of March 13, 2002 11553

4 CFR

Proposed Rules:
21 9418

5 CFR

630 9581
2640 12443

7 CFR

29 9895
75 11383
81 11384
301 9389
900 10827
905 11211
916 11393
917 11393
920 11396
925 11399
959 11401
966 11213
979 11403
982 ..... 11215, 11406
989 11555
1200 10827
1260 11411
1437 12446
1464 12829
1703 10830
1951 12458

Proposed Rules:
1 12898
305 11610
905 11450
915 11614
930 ..... 11616, 11622
948 9418
985 10848
993 11625
1124 ..... 9622, 12488
1135 ..... 9622, 12488
1205 11947

8 CFR

217 10260

9 CFR

91 11557
93 11561
94 ..... 12831, 12833
97 11565
161 11557
317 11413
319 11413
381 11413

Proposed Rules:
319 11450

10 CFR

72 11566

Proposed Rules:
50 12488
60 10853
72 11629

11 CFR

100 12834
104 12834
109 12834

12 CFR

614 9581
619 9581
702 12459
741 12459
Ch. IX 12841
907 9897
908 9897
1750 11850

Proposed Rules:
966 10337
985 10339

13 CFR

121 11874
123 11874

Proposed Rules
121 ..... 11057, 11881
124 11057
134 11057

14 CFR

11 9552
21 9552
23 ..... 9552, 11031, 11218

25 ..... 10601, 11889
36 9552
39 ..... 9390, 9392, 9394, 9395, 9396, 9582, 10099, 10603, 10606, 10831, 10969, 11220, 11891, 11893, 12464, 12466, 12856, 12858, 12859
63 9552
65 9552
71 ..... 9399, 10833, 10834, 10835, 10836, 10838, 10839, 10840, 10841, 10843, 11746
73 9552
91 9552
95 11414
97 ..... 10319, 10320
119 9552
121 ..... 9552, 12820
125 9552
129 9552
135 9552

Proposed Rules:

1 12826
21 12826
23 ..... 10857, 10858, 11451
25 12903
39 ... 9420, 9627, 10859, 10862, 11453, 11950, 11952, 12908, 12910, 12914
43 12826
45 12826
61 12826
65 12826
71 ..... 10864, 11068
91 12826

15 CFR

734 ..... 10608, 10611, 11896
738 ..... 10611, 11896
740 ..... 10608, 10611, 11896
742 ..... 10608, 10611, 11896
743 ..... 10611, 11896
748 ..... 10611, 11896
774 ..... 10608, 10611, 11896

16 CFR

20 9919
250 9923
259 9924
801 11898
802 ..... 11898, 11904
Ch. II 12916

Proposed Rules:

Ch. I 9630

17 CFR

15 11569
37 11223
38 11223
41 11223
155 11223

18 CFR

2 12468
284 11906
388 11229
1315 9924

Proposed Rules:

Ch. I 11954

19 CFR

141 12860

Proposed Rules:

10 10636
24 11954
111 11954
122 9423

20 CFR

416 11033

21 CFR

56 9584
58 9584
60 9584
101 9584
333 11571
520 11229
522 ..... 9400, 12470

Proposed Rules:

56 10115
101 12918

22 CFR

41 10322

23 CFR

710 12861

24 CFR

Proposed Rules:

17 10818
2002 11208
3280 12812
3282 12812

26 CFR

1 ..... 11034, 12471, 12863
53 12471
301 12471
602 ..... 11034, 12471, 12863

Proposed Rules:

1 ..... 9631, 9929, 10640, 11070, 12494
46 10652
301 ..... 9631, 9929

27 CFR

4 11917
251 11230

28 CFR

104 11233

Proposed Rules:

16 11631
802 11804

29 CFR

4022 11572
4044 11572

Proposed Rules:

1910 9934

30 CFR

18 10972
75 10972

31 CFR

103 9874
203 11573

Proposed Rules:

103 9879

32 CFR

199 12472

Proposed Rules:

3 9632
179 12937
901 11961

33 CFR

100 12871
117 ..... 11040, 11919, 11920
165 ... 9400, 9588, 9589, 10324, 10325, 10327, 10618, 11577, 11920, 11922, 12873
334 10843

Proposed Rules:

110 12938
151 9632
165 ..... 11961, 11963, 12938, 12940, 12943, 12945, 12947
325 10822
334 10866

34 CFR

Proposed Rules:

Ch. II 9935

36 CFR

Proposed Rules:

1275 11632

37 CFR

202 10329

Proposed Rules:

201 10652

38 CFR

3 10330
21 12473
36 ..... 9402, 10619

Proposed Rules:

3 ..... 9638, 10866

39 CFR

111 10619

Proposed Rules:

111 10340

40 CFR

50 ..... 11579, 11924
51 10844
52 ..... 9403, 9405, 9591, 10099, 10844, 11925
61 11417
62 ..... 10620, 11745
63 11417
70 ..... 9594, 11579
81 ..... 11041, 12474
82 12874
96 10844
97 10844
131 11247
141 11043
180 ..... 10622, 11248, 12875
261 11251
271 9406
300 ..... 11424, 12478
721 ..... 11008, 12879, 12882

Proposed Rules:

49 11748
52 ..... 9424, 9425, 9640, 10116, 10653, 11633, 12949
62 10656
70 ..... 9641, 11636
141 ..... 10532, 11071
180 11965
194 12949
261 ..... 10341, 11639
271 9427
281 10353
721 ..... 11008, 12950

41 CFR

101-3 11424
102-84 11424

42 CFR

410 11549
411 11549
413 ..... 9556, 11549
419 9556
424 11549
447 12479
489 ..... 9556, 11549
1001 11928
1003 11928
1005 11928
1008 11928

Proposed Rules:

Ch. IV 11969
403 ..... 10262, 10293, 11745
457 9936

43 CFR

35 12885

44 CFR

59 10631
61 10631
65 ..... 11046, 11049
67 ..... 11053, 12479

Proposed Rules:

67 ..... 11072, 11078, 12494

45 CFR

689 11936

Proposed Rules:

32 11264

46 CFR

356 11939

Proposed Rules:

28 ..... 9939, 11549
109 ..... 9939, 11549
122 ..... 9939, 11549
131 ..... 9939, 11549
169 ..... 9939, 11549
185 ..... 9939, 11549
199 ..... 9939, 11549

47 CFR

1 10634
2 12483
22 ..... 9596, 11425
25 12485
27 12483
54 ..... 10846, 11254
64 9610
73 ..... 9925, 10846, 11054, 12483, 12486
74 9617
76 10332

Proposed Rules:

Ch. I 10656
1 10658
25 ..... 9641, 10969, 12498
51 10659
54 ..... 10867, 11268
73 ..... 9428, 9646, 9945, 10660, 10871, 10872, 11970, 12500, 12501, 12953
76 10660

48 CFR

Ch. I 10529, 13048
1 ..... 13049, 13053, 13067
2 ..... 13054, 13057
3 ..... 13054, 13057
4 13057

5.....13053, 13067
6.....13053, 13067
8.....13053, 13064
9.....13057, 13067
12.....13065
14.....13054
15.....13054, 13057
17.....10528, 13053
19.....13053, 13065
22.....10528
28.....13054
31.....13067
32.....13053
35.....13054
36.....10528
52 .....13053, 13054, 13057, 13064, 13065, 13066, 13067
53.....13049
219.....11435
225.....11437
226.....11438
237.....11438
252.....11435
1515.....11439
1533.....11439
1552.....11439

Proposed Rules:

2.....13072
25.....13080
31.....13072
47.....13072
52 .....11455, 13072, 13076, 13080

49 CFR

1.....11581
172.....9926
214.....11055
244.....11582
350.....12776
365.....12702
368.....12652
385.....12758, 12776
387.....12652
390.....9410
1002.....10332
1106.....11582

Proposed Rules:

107.....11456
393.....12782
538.....10873
567.....12790
571.....10050
576.....12800
591.....12806
1511.....12954

50 CFR

14.....11260
17.....10101, 11442
300.....12885
600.....10490
622.....10113, 11055
660.....10490, 11941
679 .....9416, 9928, 10113, 10635, 10847, 11262, 11608, 12486

Proposed Rules:

17.....9806, 10118
20.....12501
648 .....9646, 10119, 11276
660.....11971

REMINDERS

The items in this list were editorially compiled as an aid to Federal Register users. Inclusion or exclusion from this list has no legal significance.

RULES GOING INTO EFFECT MARCH 20, 2002

ENVIRONMENTAL PROTECTION AGENCY

Pesticides; tolerances in food, animal feeds, and raw agricultural commodities:
- Isoxadifen-ethyl; published 3-20-02

FEDERAL HOUSING FINANCE BOARD

Agency regulations reorganization; technical amendments; published 3-20-02

INTERIOR DEPARTMENT

Organization, functions, and authority delegations:
- Hearings and Appeals Office; address change
  - Correction; published 3-20-02

TREASURY DEPARTMENT

Customs Service

Merchandise entry:
- Steel products; payment of duties; published 3-20-02

TREASURY DEPARTMENT

Internal Revenue Service

Income taxes:
- Hedging transactions; published 3-20-02

COMMENTS DUE NEXT WEEK

AFRICAN DEVELOPMENT FOUNDATION

Debarment and suspension (nonprocurement) and drug-free workplace (grants):
- Governmentwide requirements; comments due by 3-25-02; published 1-23-02 [FR 02-00001]

AGENCY FOR INTERNATIONAL DEVELOPMENT

Debarment and suspension (nonprocurement) and drug-free workplace (grants):
- Governmentwide requirements; comments due by 3-25-02; published 1-23-02 [FR 02-00001]

AGRICULTURE DEPARTMENT

Agricultural Marketing Service

Cotton Research and Promotion Order:
- Cotton Board rules and regulations; amendment; comments due by 3-28-02; published 3-18-02 [FR 02-06513]

Spearmint oil produced in Far West; comments due by 3-26-02; published 3-11-02 [FR 02-05686]

AGRICULTURE DEPARTMENT

Animal and Plant Health Inspection Service

Golden nematode-infested farm equipment, construction equipment and containers; steam treatment; comments due by 3-27-02; published 2-25-02 [FR 02-04384]

AGRICULTURE DEPARTMENT

Forest Service

Alaska National Interest lands Conservation Act; Title VIII implementation (subsistence priority):
- Fish and shellfish; subsistence taking; comments due by 3-29-02; published 2-11-02 [FR 02-01920]

Alaska National Interest Lands Conservation Act; Title VIII implementation (subsistence priority):
- Fish; subsistence taking and customary trade; comments due by 3-29-02; published 2-27-02 [FR 02-04540]

AGRICULTURE DEPARTMENT

Debarment and suspension (nonprocurement) and drug-free workplace (grants):
- Governmentwide requirements; comments due by 3-25-02; published 1-23-02 [FR 02-00001]

COMMERCE DEPARTMENT

Debarment and suspension (nonprocurement) and drug-free workplace (grants):
- Governmentwide requirements; comments due by 3-25-02; published 1-23-02 [FR 02-00001]

COMMERCE DEPARTMENT

National Oceanic and Atmospheric Administration

Fishery conservation and management:
- Atlantic highly migratory species—
  - Large coastal, small coastal, pelagic, blue, and porbeagle sharks; comments due by 3-28-02; published 12-28-01 [FR 01-31832]
- Caribbean, Gulf of Mexico, and South Atlantic fisheries—
  - Over fishing thresholds, etc.; comments due by 3-26-02; published 1-25-02 [FR 02-01872]
  - Tortugas Marine Reserves establishment; comments due by 3-25-02; published 2-7-02 [FR 02-02997]
- Northeastern United States fisheries—
  - Atlantic bluefish; comments due by 3-28-02; published 3-13-02 [FR 02-06070]

CORPORATION FOR NATIONAL AND COMMUNITY SERVICE

Debarment and suspension (nonprocurement) and drug-free workplace (grants):
- Governmentwide requirements; comments due by 3-25-02; published 1-23-02 [FR 02-00001]

DEFENSE DEPARTMENT

Debarment and suspension (nonprocurement) and drug-free workplace (grants):
- Governmentwide requirements; comments due by 3-25-02; published 1-23-02 [FR 02-00001]

EDUCATION DEPARTMENT

Debarment and suspension (nonprocurement) and drug-free workplace (grants):
- Governmentwide requirements; comments due by 3-25-02; published 1-23-02 [FR 02-00001]

ENERGY DEPARTMENT

Debarment and suspension (nonprocurement) and drug-free workplace (grants):
- Governmentwide requirements; comments due by 3-25-02; published 1-23-02 [FR 02-00001]

ENERGY DEPARTMENT

Federal Energy Regulatory Commission

Practice and procedure:
- Critical energy infrastructure information; and previously published documents, treatment
  - Comment extension; comments due by 3-25-02; published 3-13-02 [FR 02-05972]

ENVIRONMENTAL PROTECTION AGENCY

Air pollution control:
- State operating permits programs—
  - Kentucky; comments due by 3-25-02; published 2-21-02 [FR 02-03766]

ENVIRONMENTAL PROTECTION AGENCY

Air pollution control:
- State operating permits programs—
  - Kentucky; comments due by 3-25-02; published 2-21-02 [FR 02-03767]

Air programs; approval and promulgation; State plans for designated facilities and pollutants:
- Puerto Rico; comments due by 3-27-02; published 2-25-02 [FR 02-04405]

Air quality implementation plans; approval and promulgation; various States; air quality planning purposes; designation of areas:
- Montana; comments due by 3-25-02; published 2-21-02 [FR 02-04063]

ENVIRONMENTAL PROTECTION AGENCY

Air quality implementation plans; approval and promulgation; various States; air quality planning purposes; designation of areas:
- Montana; comments due by 3-25-02; published 2-21-02 [FR 02-04062]

ENVIRONMENTAL PROTECTION AGENCY

Air quality implementation plans; approval and promulgation; various States:
- California; comments due by 3-25-02; published 2-21-02 [FR 02-03915]

ENVIRONMENTAL PROTECTION AGENCY

Air quality implementation plans; approval and promulgation; various States:
- California; comments due by 3-25-02; published 2-21-02 [FR 02-03916]

ENVIRONMENTAL PROTECTION AGENCY

Air quality implementation plans; approval and promulgation; various States:
- California; comments due by 3-28-02; published 2-26-02 [FR 02-04398]

ENVIRONMENTAL PROTECTION AGENCY

Air quality implementation plans; approval and promulgation; various States:
- California; comments due by 3-28-02; published 2-26-02 [FR 02-04397]

ENVIRONMENTAL PROTECTION AGENCY

Air quality implementation plans; approval and

promulgation; various States:
California; comments due by 3-29-02; published 2-27-02 [FR 02-04525]

ENVIRONMENTAL PROTECTION AGENCY
Air quality implementation plans; approval and promulgation; various States:
California; comments due by 3-29-02; published 2-27-02 [FR 02-04526]

ENVIRONMENTAL PROTECTION AGENCY
Air quality implementation plans; approval and promulgation; various States:
California; comments due by 3-29-02; published 2-27-02 [FR 02-04527]

ENVIRONMENTAL PROTECTION AGENCY
Air quality implementation plans; approval and promulgation; various States:
Maryland; comments due by 3-29-02; published 2-27-02 [FR 02-04523]

ENVIRONMENTAL PROTECTION AGENCY
Air quality implementation plans; approval and promulgation; various States:
Maryland; comments due by 3-29-02; published 2-27-02 [FR 02-04524]

ENVIRONMENTAL PROTECTION AGENCY
Air quality implementation plans; approval and promulgation; various States:
Minnesota; comments due by 3-25-02; published 2-21-02 [FR 02-03756]

ENVIRONMENTAL PROTECTION AGENCY
Air quality implementation plans; approval and promulgation; various States:
Minnesota; comments due by 3-25-02; published 2-21-02 [FR 02-03757]

ENVIRONMENTAL PROTECTION AGENCY
Air quality implementation plans; approval and promulgation; various States:
Minnesota; comments due by 3-28-02; published 2-26-02 [FR 02-04400]

ENVIRONMENTAL PROTECTION AGENCY
Air quality implementation plans; approval and promulgation; various States:
Missouri; comments due by 3-25-02; published 2-21-02 [FR 02-03762]

ENVIRONMENTAL PROTECTION AGENCY
Air quality implementation plans; approval and promulgation; various States:
Missouri; comments due by 3-25-02; published 2-21-02 [FR 02-03763]

ENVIRONMENTAL PROTECTION AGENCY
Air quality implementation plans; approval and promulgation; various States:
Ohio; comments due by 3-25-02; published 2-21-02 [FR 02-03760]

ENVIRONMENTAL PROTECTION AGENCY
Air quality implementation plans; approval and promulgation; various States:
Ohio; comments due by 3-25-02; published 2-21-02 [FR 02-03761]

ENVIRONMENTAL PROTECTION AGENCY
Air quality implementation plans; approval and promulgation; various States:
Utah; comments due by 3-25-02; published 2-21-02 [FR 02-04066]

ENVIRONMENTAL PROTECTION AGENCY
Air quality implementation plans; approval and promulgation; various States:
Utah; comments due by 3-25-02; published 2-21-02 [FR 02-04065]

Debarment and suspension (nonprocurement) and drug-free workplace (grants):
Governmentwide requirements; comments due by 3-25-02; published 1-23-02 [FR 02-00001]

ENVIRONMENTAL PROTECTION AGENCY
Hazardous waste program authorizations:
Delaware; comments due by 3-29-02; published 2-27-02 [FR 02-04528]

ENVIRONMENTAL PROTECTION AGENCY
Hazardous waste program authorizations:
Delaware; comments due by 3-29-02; published 2-27-02 [FR 02-04529]

EXECUTIVE OFFICE OF THE PRESIDENT
National Drug Control Policy Office
Debarment and suspension (nonprocurement) and drug-free workplace (grants):
Governmentwide requirements; comments due by 3-25-02; published 1-23-02 [FR 02-00001]

FEDERAL COMMUNICATIONS COMMISSION
Common carrier services:
Interconnection—
Standards for physical collocation and virtual location; comments due by 3-25-02; published 3-8-02 [FR 02-05663]

FEDERAL EMERGENCY MANAGEMENT AGENCY
Debarment and suspension (nonprocurement) and drug-free workplace (grants):
Governmentwide requirements; comments due by 3-25-02; published 1-23-02 [FR 02-00001]

FEDERAL MEDIATION AND CONCILIATION SERVICE
Debarment and suspension (nonprocurement) and drug-free workplace (grants):
Governmentwide requirements; comments due by 3-25-02; published 1-23-02 [FR 02-00001]

FEDERAL RETIREMENT THRIFT INVESTMENT BOARD
Thrift Savings Plan:
Employee elections to contribute and funds withdrawal methods; comments due by 3-29-02; published 2-27-02 [FR 02-04499]

FEDERAL TRADE COMMISSION
Telemarketing sales rule; comments due by 3-29-02; published 1-30-02 [FR 02-01998]

GENERAL SERVICES ADMINISTRATION
Debarment and suspension (nonprocurement) and drug-free workplace (grants):
Governmentwide requirements; comments due by 3-25-02; published 1-23-02 [FR 02-00001]

HEALTH AND HUMAN SERVICES DEPARTMENT
Centers for Medicare & Medicaid Services
Medicare and Medicaid:
Terms, definitions, and addresses; technical amendments; comments due by 3-26-02; published 1-25-02 [FR 02-01065]
Medicare:
Overpayments; reporting and repayment; comments due by 3-26-02; published 1-25-02 [FR 02-01688]

HEALTH AND HUMAN SERVICES DEPARTMENT
Debarment and suspension (nonprocurement) and drug-free workplace (grants):
Governmentwide requirements; comments due by 3-25-02; published 1-23-02 [FR 02-00001]

HOUSING AND URBAN DEVELOPMENT DEPARTMENT
Community development block grants:
HUD-owned housing units demolition; grantee requirement to obtain HUD's approval; comments due by 3-25-02; published 1-22-02 [FR 02-01411]

INTER-AMERICAN FOUNDATION
Debarment and suspension (nonprocurement) and drug-free workplace (grants):
Governmentwide requirements; comments due by 3-25-02; published 1-23-02 [FR 02-00001]

INTERIOR DEPARTMENT
Indian Affairs Bureau
Economic enterprises:
Gaming on tribal lands acquired after October 17, 1988; determination procedures; correction; comments due by 3-27-02; published 1-28-02 [FR 02-01284]

INTERIOR DEPARTMENT
Fish and Wildlife Service
Alaska National Interest Lands Conservation Act; Title VIII implementation (Subsistence priority):
Fish and shellfish; subsistence taking; comments due by 3-29-02; published 2-11-02 [FR 02-01920]
Alaska National Interest Lands Conservation Act; Title VIII implementation (subsistence priority):
Fish; subsistence taking and customary trade; comments due by 3-29-02; published 2-27-02 [FR 02-04540]
Endangered and threatened species:
Critical habitat designations—

Newcomb's snail; comments due by 3-29-02; published 1-28-02 [FR 02-01770]

Various plants from Kauai and Niihau, HI; comments due by 3-29-02; published 1-28-02 [FR 02-00687]

Various plants from Kauai and Niihau, HI; correction; comments due by 3-29-02; published 2-11-02 [FR 02-03223]

Mariana mallard and Guam broadbill; comments due by 3-26-02; published 1-25-02 [FR 02-01876]

INTERIOR DEPARTMENT

Debarment and suspension (nonprocurement) and drug-free workplace (grants):

Governmentwide requirements; comments due by 3-25-02; published 1-23-02 [FR 02-00001]

INTERIOR DEPARTMENT

Minerals Management Service

Outer Continental Shelf; oil, gas, and sulphur operations:

Fixed and floating platforms; documents incorporated by reference; comments due by 3-27-02; published 2-12-02 [FR 02-03274]

INTERIOR DEPARTMENT

Surface Mining Reclamation and Enforcement Office

Permanent program and abandoned mine land reclamation plan submissions:

West Virginia; comments due by 3-28-02; published 12-28-01 [FR 01-31613]

LABOR DEPARTMENT

Debarment and suspension (nonprocurement) and drug-free workplace (grants):

Governmentwide requirements; comments due by 3-25-02; published 1-23-02 [FR 02-00001]

LABOR DEPARTMENT

Occupational Safety and Health Administration

Safety and health standards:

Tuberculosis; occupational exposure; comments due by 3-25-02; published 1-24-02 [FR 02-01712]

MERIT SYSTEMS PROTECTION BOARD

Practice and procedure:

Case suspension procedures; comments due by 3-29-02; published 1-28-02 [FR 02-01958]

NATIONAL AERONAUTICS AND SPACE ADMINISTRATION

Acquisition regulations:

Non-commercial representations and certifications and evaluation provisions for use in simplified acquisitions; comments due by 3-26-02; published 1-25-02 [FR 02-01915]

Debarment and suspension (nonprocurement) and drug-free workplace (grants):

Governmentwide requirements; comments due by 3-25-02; published 1-23-02 [FR 02-00001]

NATIONAL ARCHIVES AND RECORDS ADMINISTRATION

Debarment and suspension (nonprocurement) and drug-free workplace (grants):

Governmentwide requirements; comments due by 3-25-02; published 1-23-02 [FR 02-00001]

ARTS AND HUMANITIES, NATIONAL FOUNDATION

National Foundation on the Arts and the Humanities

Debarment and suspension (nonprocurement) and drug-free workplace (grants):

Governmentwide requirements—

Institute of Museum and Library Sciences; comments due by 3-25-02; published 1-23-02 [FR 02-00001]

National Endowment for the Arts; comments due by 3-25-02; published 1-23-02 [FR 02-00001]

National Endowment for the Humanities; comments due by 3-25-02; published 1-23-02 [FR 02-00001]

NATIONAL SCIENCE FOUNDATION

Debarment and suspension (nonprocurement) and drug-free workplace (grants):

Governmentwide requirements; comments due by 3-25-02; published 1-23-02 [FR 02-00001]

Research misconduct policy; comments due by 3-26-02; published 1-25-02 [FR 02-01833]

PEACE CORPS

Debarment and suspension (nonprocurement) and drug-free workplace (grants):

Governmentwide requirements; comments due by 3-25-02; published 1-23-02 [FR 02-00001]

PERSONNEL MANAGEMENT OFFICE

Debarment and suspension (nonprocurement) and drug-free workplace (grants):

Governmentwide requirements; comments due by 3-25-02; published 1-23-02 [FR 02-00001]

PERSONNEL MANAGEMENT OFFICE

Employment:

Basic pay for employees of temporary organizations; comments due by 3-26-02; published 1-25-02 [FR 02-01604]

PERSONNEL MANAGEMENT OFFICE

Excepted service:

Chinese, Japanese, and Hindu interpreters; Schedule A authority revoked; comments due by 3-25-02; published 1-23-02 [FR 02-01603]

POSTAL SERVICE

Persons with disabilities; access to Postal Service programs, activities, facilities, and electronic and information technologies; comments due by 3-27-02; published 2-25-02 [FR 02-04212]

SMALL BUSINESS ADMINISTRATION

Debarment and suspension (nonprocurement) and drug-free workplace (grants):

Governmentwide requirements; comments due by 3-25-02; published 1-23-02 [FR 02-00001]

SOCIAL SECURITY ADMINISTRATION

Debarment and suspension (nonprocurement) and drug-free workplace (grants):

Governmentwide requirements; comments due by 3-25-02; published 1-23-02 [FR 02-00001]

STATE DEPARTMENT

Debarment and suspension (nonprocurement) and drug-free workplace (grants):

Governmentwide requirements; comments due by 3-25-02; published 1-23-02 [FR 02-00001]

TRANSPORTATION DEPARTMENT

Debarment and suspension (nonprocurement) and drug-free workplace (grants):

Governmentwide requirements; comments due by 3-25-02; published 1-23-02 [FR 02-00001]

LIST OF PUBLIC LAWS

This is a continuing list of public bills from the current session of Congress which have become Federal laws. It may be used in conjunction with ''P L U S'' (Public Laws Update Service) on 202–523–6641. This list is also available online at *http://www.nara.gov/fedreg/plawcurr.html*.

The text of laws is not published in the **Federal Register** but may be ordered in ''slip law'' (individual pamphlet) form from the Superintendent of Documents, U.S. Government Printing Office, Washington, DC 20402 (phone, 202–512–1808). The text will also be made available on the Internet from GPO Access at *http://www.access.gpo.gov/nara/nara005.html*. Some laws may not yet be available.

S.J. Res. 32/P.L. 107–152

Congratulating the United States Military Academy at West Point on its bicentennial anniversary, and commending its outstanding contributions to the Nation. (Mar. 14, 2002; 116 Stat. 77)

Last List March 14, 2002

Public Laws Electronic Notification Service (PENS)

PENS is a free electronic mail notification service of newly enacted public laws. To subscribe, go to *http://hydra.gsa.gov/archives/publaws-l.html* or send E-mail to **listserv@listserv.gsa.gov** with the following text message:

SUBSCRIBE PUBLAWS-L Your Name.

Note: This service is strictly for E-mail notification of new laws. The text of laws is not available through this service. **PENS** cannot respond to specific inquiries sent to this address.