AUTHENTICATED
U.S. GOVERNMENT
INFORMATION
GPO

Federal Register

3–11–02 Monday
Vol. 67 No. 47 Mar. 11, 2002
Pages 10827–11030

The **FEDERAL REGISTER** is published daily, Monday through Friday, except official holidays, by the Office of the Federal Register, National Archives and Records Administration, Washington, DC 20408, under the Federal Register Act (44 U.S.C. Ch. 15) and the regulations of the Administrative Committee of the Federal Register (1 CFR Ch. I). The Superintendent of Documents, U.S. Government Printing Office, Washington, DC 20402 is the exclusive distributor of the official edition.

The **Federal Register** provides a uniform system for making available to the public regulations and legal notices issued by Federal agencies. These include Presidential proclamations and Executive Orders, Federal agency documents having general applicability and legal effect, documents required to be published by act of Congress, and other Federal agency documents of public interest.

Documents are on file for public inspection in the Office of the Federal Register the day before they are published, unless the issuing agency requests earlier filing. For a list of documents currently on file for public inspection, see http://www.nara.gov/fedreg.

The seal of the National Archives and Records Administration authenticates the Federal Register as the official serial publication established under the Federal Register Act. Under 44 U.S.C. 1507, the contents of the **Federal Register** shall be judicially noticed.

The **Federal Register** is published in paper and on 24x microfiche. It is also available online at no charge as one of the databases on GPO Access, a service of the U.S. Government Printing Office.

The online edition of the **Federal Register** is issued under the authority of the Administrative Committee of the Federal Register as the official legal equivalent of the paper and microfiche editions (44 U.S.C. 4101 and 1 CFR 5.10). It is updated by 6 a.m. each day the **Federal Register** is published and it includes both text and graphics from Volume 59, Number 1 (January 2, 1994) forward.

GPO Access users can choose to retrieve online **Federal Register** documents as TEXT (ASCII text, graphics omitted), PDF (Adobe Portable Document Format, including full text and all graphics), or SUMMARY (abbreviated text) files. Users should carefully check retrieved material to ensure that documents were properly downloaded.

On the World Wide Web, connect to the **Federal Register** at http://www.access.gpo.gov/nara. Those without World Wide Web access can also connect with a local WAIS client, by Telnet to swais.access.gpo.gov, or by dialing (202) 512–1661 with a computer and modem. When using Telnet or modem, type swais, then log in as guest with no password.

For more information about GPO Access, contact the GPO Access User Support Team by E-mail at gpoaccess@gpo.gov; by fax at (202) 512–1262; or call (202) 512–1530 or 1–888–293–6498 (toll free) between 7 a.m. and 5 p.m. Eastern time, Monday–Friday, except Federal holidays.

The annual subscription price for the **Federal Register** paper edition is $699, or $764 for a combined **Federal Register, Federal Register** Index and List of CFR Sections Affected (LSA) subscription; the microfiche edition of the **Federal Register** including the **Federal Register** Index and LSA is $264. Six month subscriptions are available for one-half the annual rate. The charge for individual copies in paper form is $10.00 for each issue, or $10.00 for each group of pages as actually bound; or $2.00 for each issue in microfiche form. All prices include regular domestic postage and handling. International customers please add 25% for foreign handling. Remit check or money order, made payable to the Superintendent of Documents, or charge to your GPO Deposit Account, VISA, MasterCard or Discover. Mail to: New Orders, Superintendent of Documents, P.O. Box 371954, Pittsburgh, PA 15250–7954.

There are no restrictions on the republication of material appearing in the **Federal Register.**

How To Cite This Publication: Use the volume number and the page number. Example: 67 FR 12345.

SUBSCRIPTIONS AND COPIES

PUBLIC	
Subscriptions:	
Paper or fiche	**202–512–1800**
Assistance with public subscriptions	**202–512–1806**
General online information	**202–512–1530; 1–888–293–6498**
Single copies/back copies:	
Paper or fiche	**202–512–1800**
Assistance with public single copies	**1–866–512–1800 (Toll-Free)**
FEDERAL AGENCIES	
Subscriptions:	
Paper or fiche	**202–523–5243**
Assistance with Federal agency subscriptions	**202–523–5243**

What's NEW!

Federal Register Table of Contents via e-mail

Subscribe to FEDREGTOC, to receive the **Federal Register** Table of Contents in your e-mail every day.

If you get the HTML version, you can click directly to any document in the issue.

To subscribe, go to **http://listserv.access.gpo.gov** and select:

Online mailing list archives
FEDREGTOC-L
Join or leave the list

Then follow the instructions.

Printed on recycled paper.

Contents

Federal Register

Vol. 67, No. 47

Monday, March 11, 2002

Agricultural Marketing Service
RULES
Practice and procedure:
Marketing agreements and orders, petitions, etc.; proceedings, 10827–10830
PROPOSED RULES
Spearmint oil produced in Far West, 10848–10853

Agriculture Department
See Agricultural Marketing Service
See Commodity Credit Corporation
See Food Safety and Inspection Service
See Forest Service
See Natural Resources Conservation Service
See Rural Utilities Service

Antitrust Division
NOTICES
National cooperative research notifications:
New Productivity Initiative, Inc., 10933

Army Department
See Engineers Corps

Arts and Humanities, National Foundation
See National Foundation on the Arts and the Humanities

Commerce Department
See Export Administration Bureau
See International Trade Administration
See National Oceanic and Atmospheric Administration

Commodity Credit Corporation
NOTICES
Agency information collection activities:
Proposed collection; comment request, 10885

Commodity Futures Trading Commission
NOTICES
Agency information collection activities:
Proposed collection; comment request, 10895–10896

Defense Department
See Engineers Corps

Education Department
NOTICES
Agency information collection activities:
Proposed collection; comment request, 10896–10897
Submission for OMB review; comment request, 10897

Employment and Training Administration
NOTICES
NAFTA transitional adjustment assistance:
Corning Cable et al., 10933–10936

Energy Department
See Federal Energy Regulatory Commission
NOTICES
Environmental statements; availability, etc.:
Paducah Gaseous Diffusion Plant, KY; water disposition activities, 10897–10898
Meetings:
National Petroleum Council, 10898

Engineers Corps
RULES
Danger zones and restricted areas:
Elizabeth River, Portsmouth, VA; Craney Island Refueling Station, 10843–10844
PROPOSED RULES
Danger zones and restricted areas:
Lake Michigan, Sheboygan County, WI; Wisconsin Air National Guard live fire exercise area, 10866

Environmental Protection Agency
RULES
Air quality implementation plans:
Interstate ozone transport reduction—
Nitrogen Oxides State Implementation Plan Call; electric generating units; seasonal heat input growth rates; response to remands in court cases, 10844–10845
Toxic substances:
Significant new uses—
Perfluoroalkyl sulfonates, 11007–11013
PROPOSED RULES
Toxic substances:
Significant new uses—
Perfluoroalkyl sulfonates, 11013–11030
NOTICES
Agency information collection activities:
Proposed collection; comment request, 10912–10914
Reporting and recordkeeping requirements, 10915
Water supply:
Public water supply supervision program—
Arkansas, 10915–10916

Executive Office of the President
See Trade Representative, Office of United States

Export Administration Bureau
NOTICES
Export privileges, actions affecting:
Infocom Corp., Inc. et al., 10890–10892

Federal Aviation Administration
RULES
Airworthiness directives:
Airbus; correction, 10969
SOCATA-Groupe AEROSPATIALE, 10831–10833
Class E airspace, 10833–10843
PROPOSED RULES
Airworthiness directives:
Air Tractor, Inc., 10862–10864
Textron Lycoming, 10859–10862
Airworthiness standards:
Special conditions—
CAP Aviation Model 222 airplane, 10858–10859
Eclipse Aviation Corp. Model 500 airplane, 10857–10858
Class E airspace, 10864–10865
NOTICES
Meetings:
Aviation Rulemaking Advisory Committee, 10965

Federal Communications Commission
RULES
Common carrier services:
Federal-State Joint Board on Universal Service—
Non-rural high-cost support mechanism; comprehensive review, 10846
Digital television stations; table of assignments:
South Carolina, 10846–10847
PROPOSED RULES
Common carrier services:
Federal-State Joint Board on Universal Service—
Non-rural high-cost support mechanism; comprehensive review, 10867–10871
Satellite communications—
Non-geostationary satellite orbit, fixed satellite service in Ka-band; licensing conditions; correction, 10969
Digital television stations; table of assignments:
Michigan, 10871–10872
Radio stations; table of assignments:
North Carolina, 10872–10873
NOTICES
Agency information collection activities:
Reporting and recordkeeping requirements, 10916–10918
Submission for OMB review; comment request, 10918–10919
Common carrier services:
Equal access and nondiscrimination obligations applicable to local exchange carriers; review, 10919–10920
Meetings:
Technological Advisory Council, 10920
Rulemaking proceedings; petitions filed, granted, denied, etc., 10920–10921

Federal Election Commission
NOTICES
Meetings; Sunshine Act, 10921

Federal Energy Regulatory Commission
NOTICES
Environmental statements; availability, etc.:
Niagara Mohawk Power Corp. et al., 10903
Northwest Pipeline Corp., 10903–10904
Meetings:
Public utility market-based rate authorizations; terms and conditions; investigation, 10904–10907
Meetings; Sunshine Act, 10907–10910
Practice and procedure:
Federal Energy Regulatory Records Information System, 10910–10912
Applications, hearings, determinations, etc.:
ANR Pipeline Co., 10898–10899
Columbia Gulf Transmission Co., 10899
Constellation Power Source, Inc., 10899
Dominion Transmission, Inc., 10899–10900
East Tennessee Natural Gas Co., 10904
Florida Gas Transmission Co., 10900–10901
Horizon Pipeline Co., L.L.C., 10901
Jefferson Island Storage & Hub L.L.C., 10901–10902
Northwest Pipeline Corp., 10902
Public Utility District No. 2 of Grant County, WA, 10902
Steuben Gas Storage Co., 10902–10903

Federal Highway Administration
NOTICES
Environmental statements; notice of intent:
San Joaquin County, CA, 10965–10966
Westchester County, NY, 10966

Federal Reserve System
NOTICES
Banks and bank holding companies:
Formations, acquisitions, and mergers, 10921
Permissible nonbanking activities, 10921

Fish and Wildlife Service
NOTICES
Endangered and threatened species:
Recovery plans—
San Francisco lessingia and Raven's manzanita, 10924–10925
Meetings:
Klamath River Basin Fisheries Task Force, 10925–10926

Food and Drug Administration
NOTICES
Reports and guidance documents; availability, etc.:
Catfish, common or usual names; Agriculture et al. Appropriations Act of 2002; section 775 implementation; correction, 10922

Food Safety and Inspection Service
NOTICES
Meetings:
Codex Alimentarius Commission—
Food Labeling Committee, 10885–10886

Forest Service
NOTICES
Environmental statements; notice of intent:
Tahoe National Forest, CA, 10886–10888
Meetings:
Resource Advisory Committees—
Central Idaho, 10888
Colville, 10888
Siskiyou County, 10888

Health and Human Services Department
See Food and Drug Administration
See Health Resources and Services Administration

Health Resources and Services Administration
NOTICES
Agency information collection activities:
Proposed collection; comment request, 10922–10924

Indian Affairs Bureau
NOTICES
Land acquisitions into trust:
Wyandotte Tribe of Oklahoma, 10926

Interior Department
See Fish and Wildlife Service
See Indian Affairs Bureau
See Land Management Bureau
See National Park Service
See Reclamation Bureau
See Surface Mining Reclamation and Enforcement Office

International Trade Administration
NOTICES
Antidumping:
Creatine monohydrate from—
China, 10892–10893

Justice Department
See Antitrust Division

NOTICES
Pollution control; consent judgments:
Hunter, Kenneth H., Jr., et al., 10930–10931
Muro, Arturo C., et al., 10931
Quemetco, Inc., et al., 10931–10932
Texas Petrochemicals Corp., 10932
Transcontinental Gas Pipe Line Corp., 10932–10933
Williams Field Services Co. et al., 10933

Labor Department
See Employment and Training Administration
See Mine Safety and Health Administration

Land Management Bureau
NOTICES
Environmental statements; notice of intent:
Daniel Boone National Forest, KY; correction, 10969

Mine Safety and Health Administration
RULES
Coal mine safety and health:
Underground mines—
Electric motor-driven mine equipment and accessories and high-voltage longwall equipment standards, 10971–11005

National Aeronautics and Space Administration
NOTICES
Meetings:
Advisory Council
Planetary Protection Advisory Committee, 10936
Space Science Advisory Committee, 10936
Patent licenses; non-exclusive, exclusive, or partially exclusive:
Enduro Medical Technology, Inc., 10936–10937
Instrumentation Technology Associates, Inc., 10937

National Foundation on the Arts and the Humanities
NOTICES
Meetings; Sunshine Act, 10937

National Highway Traffic Safety Administration
PROPOSED RULES
Fuel economy standards:
Alternative fuel vehicles; automotive fuel economy manufacturing incentives, 10873–10884

National Oceanic and Atmospheric Administration
RULES
Fishery conservation and management:
Alaska; fisheries of Exclusive Economic Zone—
Pollock, 10847
NOTICES
Antarctic Marine Living Resources Convention Act of 1984; conservation and management measures, 10893–10894
Meetings:
Caribbean Fishery Management Council, 10895

National Park Service
NOTICES
National Register of Historic Places:
National Historic Landmarks; boundaries, 10926
Pending nominations, 10926–10928

National Science Foundation
NOTICES
Meetings:
Business and Operations Advisory Committee, 10937
Reports and guidance documents; availability, etc.:
National origin discrimination as it affects limited English proficient persons; prohibition; policy guidance to Federal financial assistance recipients, 10938–10939

Natural Resources Conservation Service
NOTICES
Environmental statements; availability, etc.:
Shammack Creek Watershed, MS, 10889

Nuclear Regulatory Commission
PROPOSED RULES
Rulemaking petitions:
Nevada and Minnesota, 10853–10856
NOTICES
Meetings:
Nuclear Waste Advisory Committee, 10939–10940

Office of United States Trade Representative
See Trade Representative, Office of the United States

Public Health Service
See Food and Drug Administration
See Health Resources and Services Administration

Railroad Retirement Board
NOTICES
Agency information collection activities:
Submission for OMB review; comment request, 10940
Meetings; Sunshine Act, 10940

Reclamation Bureau
NOTICES
Environmental statements; notice of intent:
Imperial Irrigation District Water Conservation and Transfer Project, CA, 10928–10930

Rural Utilities Service
RULES
Rural development:
Distance Learning and Telemedicine Loan and Grant Program, 10830–10831
NOTICES
Environmental statements; availability, etc.:
East Kentucky Power Association, 10889
Georgia Transmission Corp., 10889–10890
Grants and cooperative agreements; availability, etc.:
Distance Learning and Telemedicine Loan and Grant Program, 10890

Securities and Exchange Commission
NOTICES
Self-regulatory organizations; proposed rule changes:
American Stock Exchange LLC, 10941–10942
National Association of Securities Dealers, Inc., 10942–10964

State Department
NOTICES
Art objects; importation for exhibition:
Art and Politics of Arthur Szyk, 10964
Cultural property:
Guatemala; archaeological objects and materials from Pre-Columbian cultures; import restrictions; memorandum of understanding with U.S., 10964

Surface Mining Reclamation and Enforcement Office
NOTICES
Agency information collection activities:
Submission for OMB review; comment request, 10930

Trade Representative, Office of the United States
NOTICES
African Growth and Opportunity Act; implementation:
Cameroon; benefits eligibility determination, 10964–10965

Transportation Department
See Federal Aviation Administration
See Federal Highway Administration
See National Highway Traffic Safety Administration

Veterans Affairs Department
PROPOSED RULES
Adjudication; pensions, compensation, dependency, etc.:
De novo review; time limit for requests, 10866–10867
NOTICES
Agency information collection activities:
Submission for OMB review; comment request, 10966–10968

Separate Parts In This Issue

Part II
Labor Department, Mine Safety and Health Administration, 10971–11005

Part III
Environmental Protection Agency, 11007–11030

Reader Aids
Consult the Reader Aids section at the end of this issue for phone numbers, online resources, finding aids, reminders, and notice of recently enacted public laws.
To subscribe to the Federal Register Table of Contents LISTSERV electronic mailing list, go to http://listserv.access.gpo.gov and select Online mailing list archives, FEDREGTOC-L, Join or leave the list (or change settings); then follow the instructions.

CFR PARTS AFFECTED IN THIS ISSUE

A cumulative list of the parts affected this month can be found in the Reader Aids section at the end of this issue.

7 CFR
900 10827
1200 10827
1703 10830
Proposed Rules:
985 10848

10 CFR
Proposed Rules:
60 10853

14 CFR
39 (2 documents) 10831, 10969
71 (11 documents) 10833, 10834, 10835, 10836, 10838, 10839, 10840, 10841, 10843
Proposed Rules:
23 (2 documents) 10857, 10858
39 (2 documents) 10859, 10862
71 10864

30 CFR
18 10972
75 10972

33 CFR
334 10843
Proposed Rules:
334 10866

38 CFR
Proposed Rules:
3 10866

40 CFR
51 10844
52 10844
96 10844
97 10844
721 11008
Proposed Rules:
721 11008

47 CFR
54 10846
73 10846
Proposed Rules:
25 10969
54 10867
73 (2 documents) 10871, 10872

49 CFR
Proposed Rules:
538 10873

50 CFR
679 10847

Rules and Regulations

Federal Register
Vol. 67, No. 47
Monday, March 11, 2002

This section of the FEDERAL REGISTER contains regulatory documents having general applicability and legal effect, most of which are keyed to and codified in the Code of Federal Regulations, which is published under 50 titles pursuant to 44 U.S.C. 1510.

The Code of Federal Regulations is sold by the Superintendent of Documents. Prices of new books are listed in the first FEDERAL REGISTER issue of each week.

DEPARTMENT OF AGRICULTURE

Agricultural Marketing Service

7 CFR Parts 900 and 1200

[AMS–02–001]

Rules of Practice

AGENCY: Agricultural Marketing Service, USDA.

ACTION: Final rule.

SUMMARY: The Agricultural Marketing Service (AMS) of the United States Department of Agriculture (USDA) is amending the Rules of Practice Governing Proceedings on Petitions To Modify or To Be Exempted From Marketing Orders and the Rules of Practice Governing Proceedings on Petitions To Modify or To Be Exempted From Research, Promotion and Education Programs. AMS also is amending the Rules of Practice and Procedure Governing Proceedings To Formulate Marketing Agreements and Marketing Orders and the Rules of Practice and Procedure Governing Proceedings To Formulate and Amend an Order.

This final rule amends the Rules of Practice Governing Proceedings on Petitions To Modify or To Be Exempted From Marketing Orders and the Rules of Practice Governing Proceedings on Petitions To Modify or To Be Exempted From Research, Promotion and Education Programs: To provide that transcripts and exhibits do not have to be kept on file in the Office of the Hearing Clerk during the active status of a proceeding; to provide that transcripts may be obtained at the cost of duplication; to provide that the date of filing an appeal petition is the date the appeal petition is filed with the Hearing Clerk; to eliminate the postmark as an effective date of filing documents or papers; to provide that when the time for filing a document or paper expires on a Saturday, the time allowed for filing the document or paper shall be extended to include the following business day; and to provide that the time for filing a motion to dismiss or an answer is within 30 days after the service of the petition.

This rule also amends the Rules of Practice and Procedure Governing Proceedings To Formulate Marketing Agreements and Marketing Orders and the Rules of Practice and Procedure Governing Proceedings To Formulate and Amend an Order to provide that: Transcripts may be obtained at the cost of duplication; to eliminate the postmark as an effective date of filing documents or papers; to provide that when the time for filing a document or paper expires on a Saturday, the time allowed for filing the document or paper shall be extended to include the following business day.

AMS also is making a number of minor and non-substantive changes for clarity and uniformity of style.

These amendments are necessary in order to expedite proceedings and save the United States and those who participate in the proceedings time and money.

EFFECTIVE DATE: March 11, 2002.

FOR FURTHER INFORMATION CONTACT: Martha Ransom, Chief, Research and Promotion Branch, F&V, AMS, USDA, Stop 0244, 1400 Independence Avenue, SW, Room 2535–S, Washington, DC 20250–0244, telephone (202) 720–9915, fax (202) 205–2800, e-mail *martha.ransom@usda.gov.*

SUPPLEMENTARY INFORMATION:

Background

Availability of Transcripts and Evidence

Section 900.60(f)(1) of the Rules of Practice Governing Proceedings on Petitions To Modify or To Be Exempted From Marketing Orders (7 CFR 900.60(f)(1)) and section 1200.52(d) of the Rules of Practice Governing Proceedings on Petitions To Modify or To Be Exempted From Research, Promotion and Education Programs (7 CFR 1200.52(d)), by cross-reference to section 900.60(f)(1), provide that during the period in which proceedings under the Rules of Practice Governing Proceedings on Petitions To Modify or To Be Exempted From Marketing Orders (7 CFR 900.50 through 900.71) and proceedings under the Rules of Practice Governing Proceedings on Petitions To Modify or To Be Exempted From Research, Promotion and Education Programs (7 CFR 1200.50 through 1200.52) have an active status, the transcripts and exhibits shall be kept on file in the Office of the Hearing Clerk, where they shall be available for examination during official hours of business. Thereafter, the transcripts and exhibits shall be made available by the Hearing Clerk for examination during official hours of business after prior request and reasonable notice to the Hearing Clerk. AMS is removing this provision. During the ''active status'' of these litigation proceedings, it is impracticable to keep the transcripts and exhibits on file in the Office of the Hearing Clerk during official hours of business because they are used by administrative law judges to prepare the initial decisions and by the Judicial Officer to prepare final decisions.

AMS also is amending section 900.60(f)(2) of the Rules of Practice Governing Proceedings on Petitions To Modify or To Be Exempted From Marketing Orders (7 CFR 900.60(f)(2)); section 1200.52(d) of the Rules of Practice Governing Proceedings on Petitions To Modify or To Be Exempted From Research, Promotion and Education Programs (7 CFR 1200.52(d)), by cross-reference to section 900.60(f)(2); section 900.11(b) of the Rules of Practice and Procedure Governing Proceedings To Formulate Marketing Agreements and Marketing Orders (7 CFR 900.11(b)); and section 1200.12(b) of the Rules of Practice and Procedure Governing Proceedings To Formulate and Amend an Order (7 CFR 1200.12(b)). All of these sections provide that if a personal copy of a transcript is desired, the copy may be obtained on written application filed with the reporter and upon payment of any fees. These sections are not consistent with section 11 of the Federal Advisory Committee Act (5 U.S.C. app. at 6 (2000)) which requires that agencies make copies of transcripts of agency proceedings available to any person at actual cost of duplication. Therefore, AMS is amending these sections to provide that transcripts of proceedings shall be made available to any person at actual cost of duplication.

Transmission of Appeal Petitions

Section 900.65(a) of the Rules of Practice Governing Proceedings on Petitions To Modify or To Be Exempted From Marketing Orders (7 CFR 900.65(a)) and section 1200.52(d) of the Rules of Practice Governing Proceedings on Petitions To Modify or To Be Exempted From Research, Promotion and Education Programs (7 CFR 1200.52(d)), by cross-reference to section 900.65(a), provide that an appeal from an administrative law judge's initial decision must be transmitted to the Hearing Clerk within 30 days after service of the initial decision. AMS is amending this provision to require that appeal petitions must be filed with the Hearing Clerk within 30 days after service of the initial decision. This amendment is necessary because, depending upon the method of transmission, the date of transmission may be difficult to discern; whereas documents filed with the Hearing Clerk are stamped with the date and time of filing.

Effective Date of Filing

AMS is amending section 900.69(d) of the Rules of Practice Governing Proceedings on Petitions To Modify or To Be Exempted From Marketing Orders (7 CFR 900.69(d)); section 1200.52(d) of the Rules of Practice Governing Proceedings on Petitions To Modify or To Be Exempted From Research, Promotion and Education Programs (7 CFR 1200.52(d)), by cross-reference to section 900.69(d); section 900.15(c) of the Rules of Practice and Procedure Governing Proceedings To Formulate Marketing Agreements and Marketing Orders (7 CFR 900.15(c)); and section 1200.17(c) of the Rules of Practice and Procedure Governing Proceedings To Formulate and Amend an Order (7 CFR 1200.17(c)). All of these sections provide that any document or paper, except a petition, shall be deemed to have been filed when it is postmarked or received by the Hearing Clerk. AMS is amending this provision to provide that a document or paper will only be deemed to be filed when it is received by the Hearing Clerk. Under the current provision, a document or paper which has a timely postmark is timely-filed even if the document or paper is received by the Hearing Clerk after the time for filing. The use of the postmark to determine timeliness causes uncertainty. The Hearing Clerk must wait for days after a document or paper is required to be filed before notifying the other parties, the administrative law judge, or the Judicial Officer that a document or paper has not been timely-filed. Moreover, at least theoretically, the Hearing Clerk can never be absolutely certain that a document or paper is not timely because the Hearing Clerk may never receive a document or paper with a timely postmark. Therefore, in order to provide certainty and a single method for determining the effective date of filing, we are eliminating the provision under which documents or papers are deemed to be filed when postmarked. Any party who believes that he or she has not been allowed sufficient time for a document or paper to be received by the Hearing Clerk may move for an extension of time for filing the document or paper.

Computation of Time for Filing

AMS is amending section 900.69(e) of the Rules of Practice Governing Proceedings on Petitions To Modify or To Be Exempted From Marketing Orders (7 CFR 900.69(e)); section1200.52(d) of the Rules of Practice Governing Proceedings on Petitions To Modify or To Be Exempted From Research, Promotion and Education Programs (7 CFR 1200.52(d)), by cross-reference to section 900.69(e); section 900.15(d) of the Rules of Practice and Procedure Governing Proceedings To Formulate Marketing Agreements and Marketing Orders (7 CFR 900.15(d)); and section 1200.17(d) of the Rules of Practice and Procedure Governing Proceedings To Formulate and Amend an Order (7 CFR 1200.17(d)). All of these sections provide that Sundays and Federal holidays shall be included in computing time allowed for filing any document or paper, and that when the time for filing expires on a Sunday or Federal holiday, the time for filing shall be extended to include the next following business day. AMS is amending these sections to make it clear that each day, including Saturdays, Sundays, and legal public holidays, is included in computing time allowed for filing any document or paper. Further, because the Hearing Clerk's office is now closed on Saturdays, we are amending these sections to provide that when the time for filing a document or paper expires on a Saturday, the time allowed for filing the document or paper shall be extended to include the following business day.

Time for Filing a Motion To Dismiss or Answer

AMS is amending sections 900.52(c)(1) (7 CFR 900.52(c)(1)) and 900.52a(a) (7 CFR 900.52a(a)) of the Rules of Practice Governing Proceedings on Petitions To Modify or To Be Exempted From Marketing Orders and section 1200.52(c) (7 CFR 1200.52(c)) and section 1200.52(d) (7 CFR 1200.52(d)) of the Rules of Practice Governing Proceedings on Petitions To Modify or To Be Exempted From Research, Promotion and Education Programs, by cross-reference to section 900.52a(a). These sections provide that the Administrator may file a motion to dismiss or an answer within 30 days after the filing of a petition. AMS is amending these provisions to provide that the AMS Administrator may file a motion to dismiss or an answer within 30 days after the service of the petition. Under the current provisions, there is no way to determine with certainty when the petition is received by the Administrator from the Hearing Clerk's office. Theoretically, under the current provisions, the Administrator can receive the petition from the Hearing Clerk's office after the 30-day period to file a motion to dismiss or an answer has elapsed. Therefore, in order to provide certainty and to ensure that the Administrator receives the petition in sufficient time to file a motion to dismiss or an answer, we are amending these provisions to provide that a motion to dismiss or an answer may be filed within 30 days after the service of the petition.

Minor and Non-substantive Changes

AMS also is making a number of minor and non-substantive changes. Specifically, AMS is: (1) Correcting an incorrect cross-reference in 7 CFR 900.51(j); (2) making editorial changes in 7 CFR 900.2(d), 7 CFR 900.51(d), 7 CFR 900.51(o), 7 CFR 900.52(b), 7 CFR 900.52(c)(2), 7 CFR 900.52a(a), 7 CFR 900.62(c), 7 CFR 900.64, 7 CFR 900.68, 7 CFR 900.70(a), 7 CFR 1200.2(e), and 7 CFR 1200.51(e) for clarity, to correct typographical errors, and for uniformity of style; (3) eliminating gender-specific references in 7 CFR 900.2(c), 7 CFR 900.2(e), 7 CFR 900.51(c), 7 CFR 900.51(e), and 7 CFR 900.52(c)(1); (4) eliminating the following provisions which have been reserved, 7 CFR 900.2(f), 7 CFR 900.51(f), 7 CFR 900.51(n), and 7 CFR 900.60(e); and (5) eliminating the definition of the **Federal Register** in 7 CFR 900.51(g) which is not used in the Rules of Practice Governing Proceedings or Petitions To Modify or To Be Exempted From Marketing Orders.

This rule amends provisions of the rules of practice governing the conduct of certain proceedings under Marketing Agreements and Orders, and under Research, Promotion, and Education Programs. Therefore, pursuant to section 553 of the Administrative Procedure Act (APA), 5 U.S.C. 553, it is exempt from the APA's notice and comment

requirements. In addition, this rule is exempt from the requirements of the Regulatory Flexibility Act, 5 U.S.C. 601 *et seq.*

Executive Orders 12866 and 12988

This rule has been determined to be not significant for purposes of Executive Order 12866 and, therefore, has not been reviewed by OMB.

This rule has been reviewed under Executive Order 12988, Civil Justice Reform. This rule is not intended to have retroactive effect. This rule will not preempt any State or local laws, regulations, or policies, unless they present an irreconcilable conflict with this rule. There are no administrative proceedings which must be exhausted before parties may file suit in court challenging this rule.

Paperwork Reduction Act

This rule contains no information collection or recordkeeping requirements under the Paperwork Reduction Act of 1995 (44 U.S.C. 3501 *et seq.*).

List of Subjects

7 CFR Part 900

Administrative practice and procedure, Freedom of information, Marketing agreements, Reporting and recordkeeping requirements.

7 CFR Part 1200

Administrative practice and procedure, Blueberries, Cotton, Dairy, Eggs, Fluid milk, Honey, Marketing agreements, Mushrooms, Peanuts, Popcorn, Pork, Potatoes, Soybeans, Watermelons.

For the reasons stated in the preamble, 7 CFR parts 900 and 1200 are amended as follows:

PART 900—GENERAL REGULATIONS

Subpart—Rules of Practice and Procedure Governing Procedures on Petitions To Formulate Marketing Agreement and Marketing Orders

1. The authority citation for Subpart—Rules of Practice and Procedure Governing Proceedings on Petitions To Formulate Marketing Agreements and Marketing Orders is revised to read as follows:

Authority: 7 U.S.C. 610.

2. Amend § 900.2 as follows:

a. Paragraph (c) is amended by removing the words ''in his stead'' and adding the words ''for the Secretary'' in their place.

b. Paragraph (d) is amended by removing the words ''terms Administrative Law Judge or Judge'' and adding the words ''term *judge*'' in their place.

c. Paragraph (e) is revised to read as set forth below.

d. Paragraph (f) is removed.

§ 900.2 Definitions.

* * * * *

(e) The term *Administrator* means the Administrator of the Agricultural Marketing Service or any officer or employee of the Department to whom authority has been delegated or may hereafter be delegated to act for the Administrator.

* * * * *

3. In § 900.11, paragraph (b) is revised to read as follows:

§ 900.11 Copies of the transcript.

* * * * *

(b) Transcripts of hearings shall be made available to any person at actual cost of duplication.

4. In § 900.15, paragraphs (c) and (d) are revised to read as follows:

§ 900.15 Filing; extensions of time; effective date of filing; and computation of time.

* * * * *

(c) *Effective date of filing.* Any document or paper required or authorized in this subpart to be filed shall be deemed to be filed at the time it is received by the Hearing Clerk.

(d) *Computation of time.* Each day, including Saturdays, Sundays, and legal public holidays, shall be included in computing the time allowed for filing any document or paper: Provided, That when the time for filing a document or paper expires on a Saturday, Sunday, or legal public holiday, the time allowed for filing the document or paper shall be extended to include the following business day.

Subpart—Rules of Practice Governing Procedures on Petitions To Modify or To Be Exempted From Marketing Orders

5. The authority citation for Subpart—Rules of Practice Governing Proceedings on Petitions To Modify or To Be Exempted From Marketing Orders is revised to read as follows:

Authority: 7 U.S.C. 608c.

6. Amend § 900.51 as follows:

a. Paragraph (c) is amended by removing the words ''in his stead'' and adding the words ''for the Secretary'' in their place.

b. Paragraph (d) is amended by removing the words ''terms *administrative law judge* or'' and adding the word ''term'' in their place.

c. Paragraph (e) is revised to read as set forth below.

d. Paragraph (j) is revised to read as set forth below.

e. Paragraph (o) is amended by removing the word ''rules'' and adding the word ''rulings'' in its place.

§ 900.51 Definitions.

* * * * *

(e) The term *Administrator* means the Administrator of the Agricultural Marketing Service or any officer or employee of the Department to whom authority has been delegated or may hereafter be delegated to act for the Administrator.

* * * * *

(j) The term *proceeding* means a proceeding before the Secretary arising under section 8c(15)(A) of the Act.

* * * * *

§ 900.52 [Amended]

7. Amend § 900.52 as follows:

a. Paragraphs (b)(2), (b)(3), and (b)(4) are amended by adding the word ''marketing'' immediately after the words ''provisions of the''.

b. Paragraph (c)(1) is amended by removing the word ''he'' and adding the words ''the Administrator'' in its place; by removing the words ''the filing'' and adding the words ''the service'' in their place; and by removing the word ''his''.

c. In paragraph (c)(2), the paragraph heading is amended by removing the words ''*Administrative Law*'' and adding the word ''*the*'' in their place.

§ 900.52a [Amended]

8. In § 900.52a, paragraph (a) is amended by removing the words ''the filing'' and adding the words ''the service'' in their place, and by removing the words ''administrative law judge'' and adding the word ''Judge'' in their place.

9. Amend § 900.60 as follows:

a. Remove paragraph (e).

b. Redesignate paragraph (f) as paragraph (e) and revise newly designated paragraph (e) to read as follows.

§ 900.60 Oral hearings before judge.

* * * * *

(e) *Transcript.* Transcripts of hearings shall be made available to any person at actual cost of duplication.

§ 900.62 [Amended]

10. In § 900.62, paragraph (c), the second sentence is amended by removing the word ''postoffice'' and adding the words ''post office'' in its place.

§ 900.64 [Amended]

11. Amend § 900.64 as follows:

a. The section heading is amended by removing the words ''Administrative Law''.

b. Paragraph heading (c) is amended by removing the words ''*Administrative Law*''.

§ 900.65 [Amended]

12. In § 900.65, paragraph (a), the first sentence is amended by removing the words ''by transmitting an appeal petition to the hearing clerk'' and adding the words ''by filing an appeal petition with the Hearing Clerk'' in their place.

§ 900.68 [Amended]

13. Amend § 900.68 as follows:

a. In § 900.68, the section heading is amended by removing the word ''Applications'' and adding the word ''Petitions'' in its place.

b. In paragraph (a)(1), the first sentence is amended by removing the words ''An application'' and adding the words ''A petition'' in their place.

14. In § 900.69, paragraphs (d) and (e) are revised to read as follows:

§ 900.69 Filing; service; extensions of time; effective date of filing; and computation of time.

* * * * *

(d) *Effective date of filing.* Any document or paper required or authorized in this subpart to be filed shall be deemed to be filed at the time it is received by the Hearing Clerk.

(e) *Computation of time.* Each day, including Saturdays, Sundays, and legal public holidays, shall be included in computing the time allowed for filing any document or paper: *Provided,* That when the time for filing a document or paper expires on a Saturday, Sunday, or legal public holiday, the time allowed for filing the document or paper shall be extended to include the following business day.

§ 900.70 [Amended]

15. In § 900.70, paragraph (a) is amended by removing the word ''or'' immediately after the word ''Secretary'' and adding the word ''for'' in its place.

* * * * *

PART 1200—RULES OF PRACTICE AND PROCEDURE GOVERNING PROCEEDINGS UNDER RESEARCH, PROMOTION, AND EDUCATION PROGRAMS

16. The authority citation for part 1200 is revised to read as follows:

Authority: 7 U.S.C. 2111, 2620, 2713, 4509, 4609, 4814, 4909, 6106, 6306, 6410, 7418, and 7486.

17. Amend § 1200.2 as follows:

a. Paragraph (a) is amended by removing the following references, ''the Floral Research and Consumer Information Act, Pub. L. 97–98, 97th Cong., approved December 22, 1981, 7 U.S.C. 4301–4319;'' and ''the Wheat and Wheat Foods Research and Nutrition Education Act, Pub. L. 95–113, 95th Cong., approved September 29, 1977, 7 U.S.C. 3401–3417;''.

b. Paragraph (e) is revised to read as set forth below.

§ 1200.2 Definitions.

* * * * *

(e) The term *Administrator* means the Administrator of the Agricultural Marketing Service or any officer or employee of the Department to whom authority has been delegated or may hereafter be delegated to act for the Administrator.

* * * * *

18. In § 1200.12, paragraph (b) is revised to read as follows:

§ 1200.12 Copies of the transcript.

* * * * *

(b) Transcripts of hearings shall be made available to any person at actual cost of duplication.

19. In § 1200.17, paragraphs (c) and (d) are revised as follows:

§ 1200.17 Filing, extension of time, effective date of filing, and computation of time.

* * * * *

(c) *Effective date of filing.* Any document or paper required or authorized in this subpart to be filed shall be deemed to be filed at the time it is received by the Hearing Clerk.

(d) *Computation of time.* Each day, including Saturdays, Sundays, and legal public holidays, shall be included in computing the time allowed for filing any document or paper: *Provided,* That when the time for filing a document or paper expires on a Saturday, Sunday, or legal public holiday, the time allowed for filing the document or paper shall be extended to include the following business day.

20. In § 1200.51, paragraph (e) is revised to read as set forth below.

§ 1200.51 Definitions.

* * * * *

(e) The term *Administrator* means the Administrator of the Agricultural Marketing Service or any officer or employee of the Department to whom authority has been delegated or may hereafter be delegated to act for the Administrator.

* * * * *

§ 1200.52 [Amended]

21. In § 1200.52, paragraph (c) is amended by removing the words ''the filing'' and adding the words ''the service'' in their place.

Dated: March 1, 2002.

A.J. Yates,

Administrator, Agricultural Marketing Service.

[FR Doc. 02–5368 Filed 3–8–02; 8:45 am]

BILLING CODE 3410–02–P

DEPARTMENT OF AGRICULTURE

Rural Utilities Service

7 CFR Part 1703

RIN 0572–AB70

Distance Learning and Telemedicine Loan and Grant Program

AGENCY: Rural Utilities Service, USDA.

ACTION: Notice of confirmation of direct final rule.

SUMMARY: The Rural Utilities Service (RUS) hereby gives notice that no adverse comments were received regarding the direct final rule amending its regulations for the Distance Learning and Telemedicine (DLT) Loan and Grant Program, and confirms the effective date of the direct final rule.

DATES: The direct final rule published in the **Federal Register** on January 23, 2002 (67 FR 3039) is effective March 11, 2002.

FOR FURTHER INFORMATION CONTACT: Marilyn J. Morgan, Chief DLT Branch, Advanced Services Division, Rural Utilities Service, U.S. Department of Agriculture, 1400 Independence Ave., SW., STOP 1550, Washington, DC 20250–1550. Telephone: 202–720–0413; e-mail at *mmorgan@rus.usda.gov*; or, Fax: 202–720–1051.

SUPPLEMENTARY INFORMATION:

Background

RUS is amending 7 CFR part 1703, subparts D, E, F, and G of its regulations for the Distance Learning and Telemedicine (DLT) Loan and Grant Program. The current regulations implement the provisions of the Federal Agriculture Improvement and Reform Act of 1996 (7 U.S.C. 950aaa *et seq.*) to encourage and improve telemedicine services and distance learning services in rural areas. The direct final rule addresses the amendments affecting the grant program. These amendments will

clarify eligibility; change the grant minimum matching contribution; clarify that only loan funds will be used to finance transmission facilities; modify financial information requirements; adjust the leveraging of resources scoring criterion; revise financial information to be submitted; and make other minor changes and corrections.

Confirmation of Effective Date

This is to confirm the effective date of March 11, 2002, for the direct final rule, 7 CFR part 1703, Distance Learning and Telemedicine Loan and Grant Program, published in the **Federal Register** on January 23, 2002.

Dated: March 4, 2002.

Hilda Gay Legg,

Administrator, Rural Utilities Service.

[FR Doc. 02–5733 Filed 3–8–02; 8:45 am]

BILLING CODE 3415–15–P

DEPARTMENT OF TRANSPORTATION

Federal Aviation Administration

14 CFR Part 39

[Docket No. 2001–CE–41–AD; Amendment 39–12672; AD 2002–05–04]

RIN 2120–AA64

Airworthiness Directives; SOCATA—Groupe AEROSPATIALE Models MS 892A–150, MS 892E–150, MS 893A, MS 893E, MS 894A, MS 894E, Rallye 150T, and Rallye 150ST Airplanes

AGENCY: Federal Aviation Administration, DOT.

ACTION: Final rule.

SUMMARY: This amendment supersedes Airworthiness Directive (AD) 77–15–06, which applies to all SOCATA—Groupe AEROSPATIALE (Socata) Models MS 892A–150, MS 892E–150, MS 893A, MS 893E, Rallye 150T, and Rallye 150ST airplanes. AD 77–15–06 currently requires you to repetitively inspect the engine mount assembly for cracks, repair any cracks found, and modify the brackets on airplanes with right angle engine mounts. This AD is the result of the French airworthiness authority's determination that updated service information and additional aircraft should be added to the applicability of AD 77–15–06. This AD retains the inspection and repair requirements of the current AD and adds the information communicated by the French airworthiness authority. The actions specified by this AD are intended to detect and correct cracks in the engine mount assembly. Such a condition could cause the engine mount assembly to fail, which could result in loss of control of the airplane.

DATES: This AD becomes effective on April 22, 2002.

The Director of the Federal Register approved the incorporation by reference of certain publications listed in the regulations as of April 22, 2002.

ADDRESSES: You may get the service information referenced in this AD from SOCATA Groupe AEROSPATIALE, Customer Support, Aerodrome Tarbes-Ossun-Lourdes, BP 930—F65009 Tarbes Cedex, France; telephone: 011 33 5 62 41 73 00; facsimile: 011 33 5 62 41 76 54; or the Product Support Manager, SOCATA—Groupe AEROSPATIALE, North Perry Airport, 7501 Pembroke Road, Pembroke Pines, Florida 33023; telephone: (954) 893–1400; facsimile: (954) 964–4191. You may view this information at the Federal Aviation Administration (FAA), Central Region, Office of the Regional Counsel, Attention: Rules Docket No. 2001–CE–41–AD, 901 Locust, Room 506, Kansas City, Missouri 64106; or at the Office of the Federal Register, 800 North Capitol Street, NW, suite 700, Washington, DC.

FOR FURTHER INFORMATION CONTACT: Karl Schletzbaum, Aerospace Engineer, FAA, Small Airplane Directorate, 901 Locust, Room 301, Kansas City, Missouri 64106; telephone: (816) 329–4146; facsimile: (816) 329–4090.

SUPPLEMENTARY INFORMATION:

Discussion

Has FAA Taken Any Action to This Point?

Fatigue cracks found on the engine mount assemblies of Socata Models MS 892A–150, MS 892E–150, MS 893A, MS 893E, Rallye 150T, and Rallye 150ST airplanes caused us to issue AD 77–15–06, Amendment 39–2975. AD 77–15–06 currently requires the following:

—Inspecting the engine mount assembly for cracks at repetitive intervals;

—Repairing any cracks found; and

—Modifying the brackets on airplanes with right angle engine mounts.

What Has Happened Since AD 77–15–06 To Initiate This Action?

The Direction Générale de l'Aviation Civile (DGAC), which is the airworthiness authority for France, recently notified FAA of the need to change AD 77–15–06. The DGAC reports that:

—The manufacturer has issued new service information to address the unsafe condition;

—Additional airplane models should be added to the applicability; and

—The initial compliance time should be changed from 100 hours time-in-service (TIS) to 50 hours TIS.

What Is the Potential Impact if FAA Took No Action?

This condition, if not detected and corrected, could cause the engine mount assembly to fail. Such failure could result in loss of control of the airplane.

Has FAA Taken Any Action to This Point?

We issued a proposal to amend part 39 of the Federal Aviation Regulations (14 CFR part 39) to include an AD that would apply to all Socata Models MS 892A–150, MS 892E–150, MS 893A, MS 893E, MS 894A, MS 894E, Rallye 150T, and Rallye 150ST airplanes. This proposal was published in the **Federal Register** as a notice of proposed rulemaking (NPRM) on December 17, 2001 (66 FR 64928). The NPRM proposed to supersede AD 77–15–06 with a new AD that would require you to:

—Repetitively inspect any engine mount assembly that is not part number 892–51–0–035–0 (or FAA-approved equivalent part number) for cracks;

—Repair cracks that do not exceed a certain length; and

—Replace the engine mount when the cracks exceed a certain length and cracks are found on an engine mount that already has two repairs.

Was the Public Invited To Comment?

The FAA encouraged interested persons to participate in the making of this amendment. We did not receive any comments on the proposed rule or on our determination of the cost to the public.

FAA's Determination

What Is FAA's Final Determination on This Issue?

After careful review of all available information related to the subject presented above, we have determined that air safety and the public interest require the adoption of the rule as proposed except for minor editorial corrections. We have determined that these minor corrections:

—Provide the intent that was proposed in the NPRM for correcting the unsafe condition; and

—Do not add any additional burden upon the public than was already proposed in the NPRM.

Cost Impact

How Many Airplanes Does This AD Impact?

We estimate that this AD affects 81 airplanes in the U.S. registry.

What Is the Cost Impact of This AD on Owners/Operators of the Affected Airplanes?

We estimate the following costs to accomplish each inspection:

Labor cost	Parts cost	Total cost per airplane	Total cost on U.S. operators
1 workhour × $60 = $60	No parts required	$60	$60 × 81 = $4,860

We estimate the following costs to accomplish any necessary repairs that will be required based on the results of each inspection. We have no way of determining the number of airplanes that may need such repair:

Labor cost	Parts cost	Total cost per airplane
3 workhours × $60 = $180	No parts required	$180

We estimate the following costs to accomplish any necessary replacements that will be required based on the results of each inspection. We have no way of determining the number of airplanes that may need such replacement:

Labor cost	Parts cost	Total cost per airplane
9 workhours × $60 = $540	$3,500	$540 + $3,500 = $4,040

Regulatory Impact

Does This AD Impact Various Entities?

The regulations adopted herein will not have a substantial direct effect on the States, on the relationship between the national government and the States, or on the distribution of power and responsibilities among the various levels of government. Therefore, it is determined that this final rule does not have federalism implications under Executive Order 13132.

Does This AD Involve a Significant Rule or Regulatory Action?

For the reasons discussed above, I certify that this action (1) is not a ''significant regulatory action'' under Executive Order 12866; (2) is not a ''significant rule'' under DOT Regulatory Policies and Procedures (44 FR 11034, February 26, 1979); and (3) will not have a significant economic impact, positive or negative, on a substantial number of small entities under the criteria of the Regulatory Flexibility Act. A copy of the final evaluation prepared for this action is contained in the Rules Docket. A copy of it may be obtained by contacting the Rules Docket at the location provided under the caption **ADDRESSES.**

List of Subjects in 14 CFR Part 39

Air transportation, Aircraft, Aviation safety, Incorporation by reference, Safety.

Adoption of the Amendment

Accordingly, under the authority delegated to me by the Administrator, the Federal Aviation Administration amends part 39 of the Federal Aviation Regulations (14 CFR part 39) as follows:

PART 39—AIRWORTHINESS DIRECTIVES

1. The authority citation for part 39 continues to read as follows:

Authority: 49 U.S.C. 106(g), 40113, 44701.

§ 39.13 [Amended]

2. FAA amends § 39.13 by removing Airworthiness Directive (AD) 77–15–06, Amendment 39–2975, and by adding a new AD to read as follows:

2002–05–04 SOCATA—Groupe AEROSPATIALE: Amendment 39–12672; Docket No. 2001–CE–41–AD; Supersedes AD 77–15–06, Amendment 39–2975.

(a) *What airplanes are affected by this AD?* This AD affects the following airplane models and serial numbers that are certificated in any category and do not have a part number 892–51–0–035–0 engine mount assembly (or FAA-approved equivalent part number) installed:

Model	Serial No.
MS 892A–150	All serial numbers.
MS 892E–150	All serial numbers.
MS 893A	All serial numbers.
MS 893E	All serial numbers.
MS 894A	1005 through 2204 equipped with kit OPT8098 9037.
MS 894E	1005 through 2204 equipped with kit OPT8098 9037.
Rallye 150T	All serial numbers.
Rallye 150ST	All serial numbers.

(b) *Who must comply with this AD?* Anyone who wishes to operate any of the airplanes identified in paragraph (a) of this AD must comply with this AD.

(c) *What problem does this AD address?* The actions specified by this AD are intended to detect and correct cracks in the engine mount assembly. Such a condition could cause the engine mount assembly to fail, which could result in loss of control of the airplane.

(d) *What actions must I accomplish to address this problem?* To address this problem, you must accomplish the following:

Actions	Compliance	Procedures
(1) Inspect the engine mount assembly for cracks.	For airplanes previously affected by AD 77–15–06: inspect within the next 50 hours time-in-service (TIS) after the last inspection required by AD 77–15–06 or within the next 50 hours TIS after April 22, 2002 (the effective date of this AD), whichever occurs first, and thereafter at intervals not to exceed 50 hours TIS. For all other airplanes: inspect within the next 50 hours TIS after April 22, 2002 (the effective date of this AD) and thereafter at intervals not to exceed 50 hours TIS.	In accordance with the Accomplishment Instructions section of Socata Service Bulletin SB 156–71, dated May 2001.
(2) If any crack is found during any inspection required by this AD that is less than 0.24 inches (6 mm) in length, repair the engine mounts assembly. If two repairs on the engine mount have already been performed, replace in accordance with paragraph (d)(3) of this AD.	Prior to further flight after the inspection in which the crack is found.	In accordance with the Accomplishment Instructions section of Socata Service Bulletin SB 156–71, dated May 2001.
(3) If any crack is found during any inspection required by this AD that is 0.24 inches (6 mm) or longer in length or if any crack is found and two repairs on the engine mount have already been performed, replace the engine mount assembly with part number 892–51–0–035–0 (or FAA-approved equivalent part number).	Prior to further flight after the inspection in which the crack is found. Repetitive inspections are no longer required after this replacement.	In accordance with the applicable maintenance manual.
(4) You may terminate the repetitive inspections of this AD after installing engine mount assembly, part number 892–51–0–035–0 (or FAA-approved equivalent part number).	At any time but it must be done prior to further flight if any of the criteria of paragraph (d)(3) are met.	In accordance with the applicable maintenance manual.

(e) *Can I comply with this AD in any other way?*

(1) You may use an alternative method of compliance or adjust the compliance time if:

(i) Your alternative method of compliance provides an equivalent level of safety; and

(ii) The Manager, Small Airplane Directorate, approves your alternative. Submit your request through an FAA Principal Maintenance Inspector, who may add comments and then send it to the Manager, Small Airplane Directorate.

(2) Alternative methods of compliance approved in accordance with AD 77–15–06, which is superseded by this AD, are not approved as alternative methods of compliance with this AD.

Note 1: This AD applies to each airplane identified in paragraph (a) of this AD, regardless of whether it has been modified, altered, or repaired in the area subject to the requirements of this AD. For airplanes that have been modified, altered, or repaired so that the performance of the requirements of this AD is affected, the owner/operator must request approval for an alternative method of compliance in accordance with paragraph (e) of this AD. The request should include an assessment of the effect of the modification, alteration, or repair on the unsafe condition addressed by this AD; and, if you have not eliminated the unsafe condition, specific actions you propose to address it.

(f) *Where can I get information about any already-approved alternative methods of compliance?* Contact Karl Schletzbaum, Aerospace Engineer, FAA, Small Airplane Directorate, 901 Locust, Room 301, Kansas City, Missouri 64106; telephone: (816) 329–4146; facsimile: (816) 329–4090.

(g) *What if I need to fly the airplane to another location to comply with this AD?* The FAA can issue a special flight permit under sections 21.197 and 21.199 of the Federal Aviation Regulations (14 CFR 21.197 and 21.199) to operate your airplane to a location where you can accomplish the requirements of this AD.

(h) *Are any service bulletins incorporated into this AD by reference?* Actions required by this AD must be done in accordance with Socata Service Bulletin SB 156–71, dated May 2001. The Director of the Federal Register approved this incorporation by reference under 5 U.S.C. 552(a) and 1 CFR part 51. You can get copies from SOCATA Groupe AEROSPATIALE, Customer Support, Aerodrome Tarbes-Ossun-Lourdes, BP 930—F65009 Tarbes Cedex, France; or the Product Support Manager, SOCATA Groupe AEROSPATIALE, North Perry Airport, 7501 Pembroke Road, Pembroke Pines, Florida 33023. You can look at copies at the FAA, Central Region, Office of the Regional Counsel, 901 Locust, Room 506, Kansas City, Missouri, or at the Office of the Federal Register, 800 North Capitol Street, NW., suite 700, Washington, DC.

(i) *Does this AD action affect any existing AD actions?* This amendment supersedes AD 77–15–06, Amendment 39–2975.

Note 2: The subject of this AD is addressed in French AD 2001–400(A), dated September 19, 2001.

(j) *When does this amendment become effective?* This amendment becomes effective on April 22, 2002.

Issued in Kansas City, Missouri, on March 1, 2002.

Michael Gallagher,

Manager, Small Airplane Directorate, Aircraft Certification Service.

[FR Doc. 02–5526 Filed 3–8–02; 8:45 am]

BILLING CODE 4910–13–P

DEPARTMENT OF TRANSPORTATION

14 CFR Part 71

[Airspace Docket No. 00–AGL–29]

Modification of Class E Airspace; Hillsboro, ND; Correction

AGENCY: Federal Aviation Administration (FAA), DOT.

ACTION: Final rule; correction.

SUMMARY: This action corrects an error in the heading of a final rule that was published in the **Federal Register** on Friday, January 4, 2002 (67 FR 515), Airspace Docket No. 00–AGL–29. The final rule modified Class E Airspace at Hillsboro, ND.

EFFECTIVE DATE: 0901 UTC, February 21, 2002.

FOR FURTHER INFORMATION CONTACT: Denis C. Burke, Air Traffic Division, Airspace Branch, AGL–520, Federal Aviation Administration, 2300 East Devon Avenue, Des Plaines, IL 60018, telephone: (847) 294–7477.

SUPPLEMENTARY INFORMATION:

History

Federal Register document 02-256, Airspace Docket No. 00–AGL–29, published on January 4, 2002 (67 FR 515), modified Class E Airspace at Hillsboro, ND. An error in the heading for the Class E airspace for Hillsboro, ND, was published. The word proposed should not have been used. This action corrects that error.

Correction to Final Rule

Accordingly, pursuant to the authority delegated to me, the heading for the Class E airspace, Hillsboro, ND, as published in the **Federal Register** January 4, 2002 (67 FR 515), (FR Doc. 02–256), is corrected as follows: On page 515, column 2, in the heading, line 5, remove the word ''Proposed''.

Issued in Des Plaines, Illinois on February 6, 2002.

Nancy B. Shelton,

Manager, Air Traffic Division, Great Lakes Region.

[FR Doc. 02–5118 Filed 3–8–02; 8:45 am]

BILLING CODE 4910–13–M

DEPARTMENT OF TRANSPORTATION

Federal Aviation Administration

14 CFR Part 71

[Airspace Docket No. 00–AGL–28]

Establishment of Class E Airspace; Stanley, ND; Correction

AGENCY: Federal Aviation Administration (FAA), DOT.

ACTION: Final rule; correction.

SUMMARY: This action corrects an error in the preamble under the caption ''The Rule'' of a Final Rule that was published in the **Federal Register** on Friday, January 4, 2002 (67 FR 516), Airspace Docket No. 00–AGL–28. The Final rule established Class E Airspace at Stanley, ND.

EFFECTIVE DATE: 0901 UTC February 21, 2002.

FOR FURTHER INFORMATION CONTACT: Denis C. Burke, Air Traffic Division, Airspace Branch, AGL–520, Federal Aviation Administration, 2300 East Devon Avenue, Des Plaines, Illinois 60018, telephone (847) 294–7568.

SUPPLEMENTARY INFORMATION:

History

Federal Register document 02–257, Airspace docket No. 00–AGL–28, published on January 4, 2002 (67 FR 516), established Class E Airspace at Stanley, ND. The following error was contained in the preamble under the caption ''The Rule'': The city of Kenmare was referred to instead of Stanley. This action corrects this error.

Accordingly, pursuant to the authority delegated to me, the error for the Class E airspace, Stanley, ND, as published in the **Federal Register** January 4, 2002 (67 FR 516), (FR Doc. 02–257), is corrected as follows:

On page 516, column 2, under the caption ''The Rule'', first sentence, correct ''Kenmare'' to read ''Stanley''.

Issued in Des Plaines, Illinois on February 6, 2002.

Nancy B. Shelton,

Manager, Air Traffic Division, Great Lakes Region.

[FR Doc. 02–5117 Filed 3–8–02; 8:45 am]

BILLING CODE 4910–13–M

DEPARTMENT OF TRANSPORTATION

14 CFR Part 71

[Airspace Docket No. 00–AGL–24]

Modification of Class E Airspace; Youngstown-Warren Regional Airport, OH; Correction

AGENCY: Federal Aviation Administration (FAA), DOT.

ACTION: Final rule; correction.

SUMMARY: This action corrects an error in the **SUMMARY** of a Final Rule that was published in the **Federal Register** on Friday, January 4, 2002 (67 FR 517), Airspace Docket No. 00–AGL–24. The Final Rule modified Class E Airspace at Youngstown-Warren Regional Airport, OH.

EFFECTIVE DATE: 0901 UTC, February 21, 2002.

FOR FURTHER INFORMATION CONTACT: Denis C. Burke, Air Traffic Division, Airspace Branch, AGL–520, Federal Aviation Administration, 2300 East Devon Avenue, Des Plaines, IL 60018, telephone: (847) 294–7477.

SUPPLEMENTARY INFORMATION:

History

Federal Register document 02–258, Airspace Docket No. 00–AGL–24, published on January 4, 2002 (67 FR 517), modified class E Airspace at Youngstown-Warren Regional Airport, OH. An error in the **SUMMARY** for the Class E airspace for Youngstown-Warren Regional Airport, OH, was published. This action corrects that error.

Correction to Final Rule

Accordingly, pursuant to the authority delegated to me, the **SUMMARY** for the Class E airspace, Youngstown-Warren Regional Airport, OH, as published in the **Federal Register** January 4, 2002 (67 FR 517), (FR Doc. 02–258), is corrected as follows:

On page 517, column 1, second sentence of the **SUMMARY**, remove the words ''to Runway 26''.

Issued in Des Plaines, Illinois on January 25, 2002.

Nancy B. Shelton,

Manager, Air Traffic Division, Great Lakes Region.

[FR Doc. 02–5116 Filed 3–8–02; 8:45 am]

BILLING CODE 4910–13–M

DEPARTMENT OF TRANSPORTATION

Federal Aviation Administration

14 CFR Part 71

[Airspace Docket No. 01–AAL–1]

Revocation of Class E Airspace; Umiat, AK

AGENCY: Federal Aviation Administration (FAA), DOT.

ACTION: Final rule.

SUMMARY: This action revokes Class E airspace at Umiat, AK. This action is necessary because the Umiat airport no longer meets the requirements for Class E airspace to protect Instrument Flight Rules (IFR) operations at Umiat, AK. This rule results in the removal of controlled airspace at Umiat, AK.

EFFECTIVE DATE: 0901 UTC, June 13, 2002.

FOR FURTHER INFORMATION CONTACT: Derril D. Bergt, AAL–538, Federal Aviation Administration, 222 West 7th Avenue, Box 14, Anchorage, AK 99513–7587; telephone number (907) 271–2796; fax: (907) 271–2850; e-mail: Derril.CTR.Bergt@faa.gov. Internet address: *http://www.alaska.faa.gov/at* or at address *http://162.58.28.41/at.*

SUPPLEMENTARY INFORMATION:

History

On November 7, 2001, a proposal to amend part 71 of the Federal Aviation Regulations (14 CFR part 71) to revoke the Class E airspace at Umiat, AK, was published in the **Federal Register** (66 FR 56257). The Umiat airport does not have a standard instrument approach procedure, it is unattended, and does not meet the requirements to be used as

an IFR alternate. The Colored Federal Airway Amber 4 (A–4) was realigned and Colored Federal Airway Amber 6 (A–6) was revoked on December 3, 1998 (63 FR 53279, 5 Oct 1998, Airspace Docket 98–AAL–6) in conjunction with the removal of the Umiat Nondirectional Radio Beacon (NDB). The Umiat NDB was decommissioned in October 1999 resulting in the loss of the instrument approach procedure. With the subsequent cancellation of the A–Paid weather observer contract, there are now no aviation weather sources at Umiat, AK. Futhermore, the Umiat airport is not included in the National Plan of Integrated Airport Systems. Thus, the Umiat airport does not qualify for Class E airspace. This rule revokes the Class E controlled airspace intended for IFR operations at Umiat, AK.

Interested parties were invited to participate in this rulemaking proceeding by submitting written comments on the proposal to the FAA. No public comments have been received, thus, the rule is adopted as written.

The area will be depicted on aeronautical charts for pilot reference. The coordinates for this airspace docket are based on North American Datum 83. The Class E airspace areas extending upward from 700 feet or more above the surface of the earth are published in paragraph 6005 of FAA Order 7400.9J, *Airspace Designations and Reporting Points,* dated August 31, 2001, and effective September 16, 2001, which is incorporated by reference in 14 CFR 71.1. The Class E airspace designation listed in this document will be revoked and revised subsequently in the Order.

The FAA has determined that this proposed regulation only involves an established body of technical regulations for which frequent and routine amendments are necessary to keep them operationally current. It, therefore—(1) is not a ''significant regulatory action'' under Executive Order 12866; (2) is not a ''significant rule'' under DOT Regulatory Policies and Procedures (44 FR 11034; February 26, 1979); and (3) does not warrant preparation of a regulatory evaluation as the anticipated impact is so minimal. Since this is a routine matter that will only affect air traffic procedures and air navigation, it is certified that this rule, when promulgated, will not have a significant economic impact on a substantial number of small entities under the criteria of the Regulatory Flexibility Act.

List of Subjects in 14 CFR Part 71

Airspace, Incorporation by reference, Navigation (air).

Adoption of the Amendment

In consideration of the foregoing, the Federal Aviation Administration amends 14 CFR part 71 as follows:

PART 71—DESIGNATION OF CLASS A, CLASS B, CLASS C, CLASS D, AND CLASS E AIRSPACE AREAS; AIRWAYS; ROUTES; AND REPORTING POINTS

1. The authority citation for 14 CFR part 71 continues to read as follows:

Authority: 49 U.S.C. 106(g), 40103, 40113, 40120; E.O. 10854, 24 FR 9565, 3 CFR, 1959–1963 Comp., p. 389.

§ 71.1 [Amended]

2. The incorporation by reference in 14 CFR 71.1 of Federal Aviation Administration Order 7400.9J, *Airspace Designations and Reporting Points,* dated August 31, 2001, and effective September 16, 2001, is amended as follows:

* * * * *

Paragraph 6005 Class E airspace extending upward from 700 feet or more above the surface of the earth.

* * * * *

AAL AK E5 Umiat, AK [REVOKED]

* * * * *

Issued in Anchorage, AK, on February 21, 2002.

Stephen P. Creamer,

Assistant Manager, Air Traffic Division, Alaskan Region.

[FR Doc. 02–5114 Filed 3–8–02; 8:45 am]

BILLING CODE 4910–13–U

DEPARTMENT OF TRANSPORTATION

Federal Aviation Administration

14 CFR Part 71

[Airspace Docket No. 01–AGL–21]

Modification of Class E Airspace; Zanesville, OH

AGENCY: Federal Aviation Administration (FAA), DOT.

ACTION: Direct final rule; request for comments.

SUMMARY: This document modifies Class E airspace at Zanesville, OH. A Global Positioning System (GPS) Standard Instrument Approach Procedure (SIAP) 160° helicopter point in space approach, has been developed for Bethesda Hospital, Zanesville, OH. Controlled airspace extending upward from 700 feet above the surface is needed to contain aircraft executing the approach. This action modifies existing controlled airspace for Zanesville, OH, in order to include the point in space approach serving Bethesda Hospital.

EFFECTIVE DATE: Effective 0901 UTC, August 8, 2002. Comments must be received on or before April 22, 2002.

ADDRESSES: Send comments on the rule in triplicate to: Federal Aviation Administration, Office of the Regional Counsel, AGL–7, Rules Docket No. 01–AGL–21, 2300 East Devon Avenue, Des Plaines, Illinois 60018. The official docket may be examined in the Office of the Regional Counsel, Federal Aviation Administration, 2300 East Devon Avenue, Des Plaines, Illinois. An informal docket may also be examined during normal business hours at the Air Traffic Division, Airspace Branch, Federal Aviation Administration, 2300 East Devon Avenue, Des Plaines, Illinois.

FOR FURTHER INFORMATION CONTACT: Denis C. Burke, Airspace Branch, AGL–520, Air Traffic Division, Federal Aviation Administration, 2300 East Devon Avenue, Des Plaines, Illinois 60018, telephone (847) 294–7568.

SUPPLEMENTARY INFORMATION: This amendment to 14 CFR part 71 modifies Class E airspace at Zanesville, Ohio, to accommodate aircraft executing the proposed GPS SIAP 160° helicopter point in space approach for Bethesda Hospital by modifying existing controlled airspace. The area will be depicted on appropriate aeronautical charts. Class E airspace designations are published in Paragraph 6005 of FAA Order 7400.9J, dated August 31, 2002, and effective September 16, 2001, which is incorporated by reference in 14 CFR Sec. 71.1. The Class E airspace designation listed in this document will be published subsequently in the order.

The Direct Final Rule Procedure

The FAA anticipates that this regulation will not result in adverse or negative comment and therefore is issuing it as a direct final rule. A substantial number of previous opportunities provided to the public to comment on substantially identical actions have resulted in negligible adverse comments or objections. Unless a written adverse or negative comment, or a written notice of intent to submit an adverse or negative comment is received within the comment period, the regulation will become effective on the date specified above. After the close of the comment period, the FAA will publish a document in the **Federal Register** indicating that no adverse or negative comments were received and confirming the date on which the final rule will become effective. If the FAA

does receive, within the comment period, an adverse or negative comment, or written notice of intent to submit such a comment, a document will be published in the **Federal Register**. This document may withdraw the direct final rule in whole or in part.

After considering the adverse or negative comment, we may publish another direct final rule or publish a notice of proposed rulemaking with a new comment period.

Comments Invited

Although this action is in the form of a final rule and was not preceded by a notice of proposed rulemaking, comments are invited on this rule. Interested persons are invited to comment on this rule by submitting such written data, views, or arguments, as they may desire. Communications should identify the Rules Docket number and be submitted in triplicate to the address specified under the caption **ADDRESSES**. All communications received on or before the closing date for comments will be considered, and this rule may be amended or withdrawn in light of the comments received. Factual information that supports the commenter's ideas and suggestions is extremely helpful in evaluating the effectiveness of this action and determining whether additional rulemaking action is needed.

Comments are specifically invited on the overall regulatory, economic, environmental, and energy aspects of the rule that might suggest a need to modify the rule. All comments submitted will be available, both before and after the closing date for comments, in the Rules Docket for examination by interested persons. A report that summarizes each FAA-public contact concerned with the substance of this action will be filed in the Rules Docket.

Commenters wishing the FAA to acknowledge receipt of their comments submitted in response to this rule must submit a self-addressed, stamped postcard on which the following statement is made: ''Comments to Docket No. 01–AGL–21.'' The postcard will be date stamped and returned to the commenter.

Agency Findings

The regulations adopted herein will not have substantial direct effects on the States, on the relationship between the national government and the States, or on the distribution of power and responsibilities among the various levels of government. Therefore, it is determined that this final rule will not have federalism implications under Executive Order 13132.

Further, the FAA has determined that this regulation is noncontroversial and unlikely to result in adverse or negative comments and only involves an established body of technical regulations that require frequent and routine amendments to keep them operationally current. Therefore, I certify that this regulation (1) is not a ''significant regulatory action'' under Executive Order 12866; (2) is not a ''significant rele'' under DOT Regulatory Policies and Procedures (44 FR 11034; February 26, 1979); and (3) if promulgated, will not have a significant economic impact, positive or negative, on a substantial number of small entities under the criteria of the Regulatory Flexibility Act. Since this rule involves matters that will only affect air traffic procedures and air navigation, it does not warrant preparation of a Regulatory Flexibility Analysis because the anticipated impact is so minimal.

List of Subjects in 14 CFR Part 71

Airspace, Incorporation by reference, Navigation (air).

Adoption of the Amendment

Accordingly, pursuant to the authority delegated to me, the Federal Aviation Administration amends 14 CFR Part 71 as follows:

PART 71—DESIGNATION OF CLASS A, CLASS B, CLASS C, CLASS D, AND CLASS E AIRSPACE AREAS; AIRWAYS; ROUTES; AND REPORTING POINTS

1. The authority citation for 14 CFR Part 71 continues to read as follows:

Authority: 49 U.S.C. 106(g), 40102, 40113, 40120; E.O. 10854; 24 FR 9565, 3 CFR, 1959–1963 Comp., p. 389.

§ 71.1 [Amended]

2. The incorporation by reference in 14 CFR 71.1 of the Federal Aviation Administration Order 7400.9J, Airspace Designations and Reporting Points, dated August 31, 2001, and effective September 16, 2001, is amended as follows:

* * * * *

Paragraph 6005 Class E airspace areas extending upward from 700 feet or more above the surface of the earth.

* * * * *

AGL OH E5 Zanesville, OH [Revised]

Zanesville, Zanesville Municipal Airport, OH
(Lat. 39°56′40″N., long 81°53′31″W.)
Zanesville VOR/DME
(Lat. 39°56′27″N., long. 81°53′33″W.)
Zanesville, Bethesda Hospital, OH
Point in Space Coordinances
(Lat. 39°59′5″N., long. 82°1′30″W.)

That airspace extending upward from 700 feet above the surface within a 6.5-mile radius of Zanesville Municipal Airport and within 7 miles east and 4.4 miles west of the Zanesville VOR/DME 220° radiul extending from the VOR/DME to 10.5 miles southwest of the VOR/DME, and within 2.4 miles either side of the Zanesville VOR/DME 028° radius extending from the 6.5-mile radius to 7 miles northwest of the VOR/DME, and within a 6-mile radius of the Point in Space serving Bethesda Hospital.

* * * * *

Issued in Des Plaines, Illinois on December 27, 2001.

Nancy B. Shelton,

Manager, Air Traffic Division, Great Lakes Region.

[FR Doc. 02–5633 Filed 3–8–02; 8:45 am]

BILLING CODE 4910–13–M

DEPARTMENT OF TRANSPORTATION

Federal Aviation Administration

14 CFR Part 71

[Airspace Docket No. 01–AGL–19]

Modification of Class E Airspace; Ashland, OH

AGENCY: Federal Aviation Administration (FAA), DOT.

ACTION: Direct final rule; request for comments.

SUMMARY: This document modifies Class E airspace at Ashland, OH A Global Positioning System (GPS) Standard Instrument Approach Procedure (SIAP), 022° helicopter point in space approach, has been developed for Samaritian Regional Health System, Ashland, OH. Controlled airspace extending upward from 700 feet above the surface is needed to contain aircraft executing the approach. This action modifies existing controlled airspace for Ashland, OH, in order to include the point in space approach serving Samaritian Regional Health System.

DATES: 0901 UTC, August 08, 2002. Comments must be received on or before April 22, 2002.

ADDRESSES: Send comments on the rule in triplicate to: Federal Aviation Administration, Office of the Regional Counsel, AGL–7, Rules Docket No. 01–AGL–19, 2300 East Devon Avenue, Des Plaines, Illinois 60018.

The official docket may be examined in the Office of the Regional Counsel, Federal Aviation Administration, 2300 East Devon Avenue, Des Plaines, Illinois. An informal docket may also be examined during normal business hours at the Air Traffic Division, Airspace Branch, Federal Aviation

Administration, 2300 East Devon Avenue, Des Plaines, Illinois.

FOR FURTHER INFORMATION CONTACT: Denis C. Burke, Airspace Branch, AGL–520, Air Traffic Division, Federal Aviation Administration, 2300 East Devon Avenue, Des Plaines, Illinois 60018, telephone (847) 294–7568.

SUPPLEMENTARY INFORMATION: This amendment to 14 CFR part 71 modifies class E airspace at Ashland, Ohio, to accommodate aircraft executing the proposed GPS SIAP 022° helicopter point in space approach for Samaritian Regional Health System by modifying existing controlled airspace. The area will be depicted on appropriate aeronautical charts. Class E airspace designations are published in Paragraph 6005 of FAA Order 7400.9J, dated August 31, 2001, and effective September 16, 2001, which is incorporated by reference in 14 CFR Sec. 71.1. The Class E airspace designation listed in this document will be published subsequently in the order.

The Direct Final Rule Procedure

The FAA anticipates that this regulation will not result in adverse or negative comment and therefore is issuing it as a direct final rule. A substantial number of previous opportunities provided to the public to comment on substantially identical actions have resulted in negligible adverse comments or objections. Unless a written adverse or negative comment, or a written notice of intent to submit an adverse or negative comment is received within the comment period, the regulation will become effective on the date specified above. After the close of the comment period, the FAA will publish a document in the **Federal Register** indicating that no adverse or negative comments were received and confirming the date on which the final rule will become effective. If the FAA does receive, within the comment period, an adverse or negative comment, or written notice of intent to submit such a comment, a document will be published in the **Federal Register**. This document may withdraw the direct final rule in whole or in part.

After considering the adverse or negative comment, we may publish another direct final rule or publish a notice of proposed rulemaking with a new comment period.

Comments Invited

Although this action is in the form of a final rule and was not preceded by a notice of proposed rulemaking, comments are invited on this rule. Interested persons are invited to comment on this rule by submitting such written data, views, or arguments, as they may desire. Communications should identify the Rules Docket number and be submitted in triplicate to the address specified under the caption **ADDRESSES.** All communications received on or before the closing date for comments will be considered, and this rule may be amended or withdrawn in light of the comments received. Factual information that supports the commenter's ideas and suggestions is extremely helpful in evaluating the effectiveness of this action and determining whether additional rulemaking action is needed.

Comments are specifically invited on the overall regulatory, economic, environmental, and energy aspects of the rule that might suggest a need to modify the rule. All comments submitted will be available, both before and after the closing date for comments, in the Rules Docket for examination by interested persons. A report that summarizes each FAA-public contact concerned with the substance of this action will be filed in the Rules Docket.

Commenters wishing the FAA to acknowledge receipt of their comments submitted in response to this rule must submit a self-addressed, stamped postcard on which the following statement is made: ''Comments to Docket No. 01–AGL–19.'' The postcard will be date stamped and returned to the commenter.

Agency Findings

The regulations adopted herein will not have substantial direct effects on the States, on the relationship between the national government and the States, or on the distribution of power and responsibilities among the various levels of government. Therefore, it is determined that this final rule will not have federalism implications under Executive Order 13132.

Further, the FAA has determined that this regulation is noncontroversial and unlikely to result in adverse or negative comments and only involves an established body of technical regulations that require frequent and routine amendments to keep them operationally current. Therefore, I certify that this regulation (1) is not a ''significant regulatory action'' under Executive Order 12866; (2) is not a ''significant rule'' under DOT Regulatory Policies and Procedures (44 FR 11034; February 26, 1979); and (3) if promulgated, will not have a significant economic impact, positive or negative, on a substantial number of small entities under the criteria of the Regulatory Flexibility Act. Since this rule involves routine matters that will only affect air traffic procedures and air navigation, it does not warrant preparation of a Regulatory Flexibility Analysis because the anticipated impact is so minimal.

List of Subjects in 14 CFR Part 71

Airspace, Incorporation by reference, Navigation (air).

Adoption of the Amendment

Accordingly, pursuant to the authority delegated to me, the Federal Aviation Administration amends 14 CFR part 71 as follows:

PART 71—DESIGNATION OF CLASS A, CLASS B, CLASS C, CLASS D, AND CLASS E AIRSPACE AREAS; AIRWAYS; ROUTES; AND REPORTING POINTS

1. The authority citation for 14 CFR part 71 continues to read as follows:

Authority: 49 U.S.C. 106(g), 40103, 40113, 40120; E.O. 10854; 24 FR 9565, 3 CFR, 1959–1963 Comp., p. 389.

§ 71.1 [Amended]

2. The incorporation by reference in 14 CFR 71.1 of the Federal Aviation Administration Order 7400.9J, Airspace Designations and Reporting Points, dated August 31, 2001, and effective September 16, 2001, is amended as follows:

* * * * *

Paragraph 6005 Class E airspace areas extending upward from 700 feet or more above the surface of the earth.

* * * * *

AGL OH E5 Ashland, OH [Revised]

Ashland, Ashland County Airport, OH
(Lat. 40°54′11″ N., long. 82°15′21″ W.)
Ashland, Samaritian Regional Health System, OH
Point in Space Coordinates
(Lat. 40°50′58''N., long. 82°18'52''W.)

That airspace extending upward from 700 feet above the surface within a 6.3-mile radius of the Ashland County Airport and within 2.6 miles either side of the 002° bearing from the Airport extending from the 6.3-mile radius to 10.4 miles north of the airport, and within a 6-mile radius of the Point in Space serving Samaritian Regional Health System, excluding that airspace which lies within the Mansfield, OH, Class E airspace area.

* * * * *

Issued in Des Plaines, Illinois on December 27, 2001.

Nancy B. Shelton,

Manager, Air Traffic Division, Great Lakes Region.

[FR Doc. 02–5632 Filed 3–8–02; 8:45 am]

BILLING CODE 4910–13–M

DEPARTMENT OF TRANSPORTATION

Federal Aviation Administration

14 CFR Part 71

[Airspace Docket No. 01–AGL–15]

Modification of Class E Airspace; Mount Vernon, OH

AGENCY: Federal Aviation Administration (FAA), DOT.

ACTION: Direct final rule; request for comments.

SUMMARY: This document modifies Class E airspace at Mount Vernon, OH. A Global Positioning System (GPS) Standard Instrument Approach Procedure (SIAP) 140° helicopter point in space approach, has been developed for Knox Community Hospital, Mount Vernon, OH. Controlled airspace extending upward from 700 feet above the surface is needed to contain aircraft executing the approach. This action modifies existing controlled airspace for Mount Vernon, OH, in order to include the point in space approach serving Knox Community Hospital.

DATES: Effective 0901 UTC, August 08, 2002. Comments must be received on or before April 22, 2002.

ADDRESSES: Send comments on the rule in triplicate to: Federal Aviation Administration, Office of the Regional Counsel, AGL–7, Rules Docket No. 01–AGL–15, 2300 East Devon Avenue, Des Plaines, Illinois 60018. The official docket may be examined in the Office of the Regional Counsel, Federal Aviation Administration, 2300 East Devon Avenue, Des Plaines, Illinois. An informal docket may also be examined during normal business hours at the Air Traffic Division, Airspace Branch, Federal Aviation Administration, 2300 East Devon Avenue, Des Plaines, Illinois.

FOR FURTHER INFORMATION CONTACT: Denis C. Burke, Airspace Branch, AGL–520, Air Traffic Division, Federal Aviation Administration, 2300 East Devon Avenue, Des Plaines, Illinois 60018, telephone (847) 294–7568.

SUPPLEMENTARY INFORMATION: This amendment to 14 CFR part 71 modifies class E airspace at Mount Vernon, Ohio, to accommodate aircraft executing the proposed GPS SIAP 140° helicopter point in space approach for Knox Community Hospital by modifying existing controlled airspace. The area will be depicted on appropriate aeronautical charts. Class E airspace designations are published in Paragraph 6005 of FAA Order 7400.9J, dated August 31, 2001, and effective September 16, 2001, which is incorporated by reference in 14 CFR Sec. 71.1. The Class E airspace designation listed in this document will be published subsequently in the order.

The Direct Final Rule Procedure

The FAA anticipates that this regulation will not result in adverse or negative comment and therefore is issuing it as a direct final rule. A substantial number of previous opportunities provided to the public to comment on substantially identical actions have resulted in negligible adverse comments or objections. Unless a written adverse or negative comment, or a written notice of intent to submit an adverse or negative comment is received within the comment period, the regulation will become effective on the date specified above. After the close of the comment period, the FAA will publish a document in the **Federal Register** indicating that no adverse or negative comments were received and confirming the date on which the final rule will become effective. If the FAA does receive, within the comment period, an adverse or negative comment, or written notice of intent to submit such a comment, a document will be published in the **Federal Register**. This document may withdraw the direct final rule in whole or in part.

After considering the adverse or negative comment, we may publish another direct final rule or publish a notice of proposed rulemaking with a new comment period.

Comments Invited

Although this action is in the form of a final rule and was not preceded by a notice of proposed rulemaking, comments are invited on this rule. Interested persons are invited to comment on this rule by submitting such written data, views, or arguments, as they may desire. Communications should identify the Rules Docket number and be submitted in triplicate to the address specified under the caption **ADDRESSES**. All communications received on or before the closing date for comments will be considered, and this rule may be amended or withdrawn in light of the comments received. Factual information that supports the commenter's ideas and suggestions is extremely helpful in evaluating the effectiveness of this action and determining whether additional rulemaking action is needed.

Comments are specifically invited on the overall regulatory, economic, environmental, and energy aspects of the rule that might suggest a need to modify the rule. All comments submitted will be available, both before and after the closing date for comments, in the Rules Docket for examination by interested persons. A report that summarizes each FAA-public contact concerned with the substance of this action will be filed in the Rules Docket.

Commenters wishing the FAA to acknowledge receipt of their comments submitted in response to this rule must submit a self-addressed, stamped postcard on which the following statement is made: ''Comments to Docket No. 01–AGL–15.'' The postcard will be date stamped and returned to the commenter.

Agency Findings

The regulations adopted herein will not have substantial direct effects on the States, on the relationship between the national government and the States, or on the distribution of power and responsibilities among the various levels of government. Therefore, it is determined that this final rule will not have federalism implications under Executive Order 13132.

Further, the FAA has determined that this regulation is noncontroversial and unlikely to result in adverse or negative comments and only involve an established body of technical regulations that require frequent and routine amendments to keep them operationally current. Therefore, I certify that this regulation (1) is not a ''significant regulatory action'' under Executive Order 12866; (2) is not a ''significant rule'' under DOT Regulatory Policies and Procedures (44 FR 11034; February 26, 1979); and (3) if promulgated, will not have a significant economic impact, positive or negative, on a substantial number of small entities under the criteria of the Regulatory Flexibility Act. Since this rule involves routine matters that will only affect air traffic procedures and air navigation, it does not warrant preparation of a Regulatory Flexibility Analysis because the anticipated impact is so minimal.

List of Subjects in 14 CFR Part 71

Airspace, Incorporation by reference, Navigation (air).

Adoption of the Amendment

Accordingly, pursuant to the authority delegated to me, the Federal Aviation Administration amends 14 CFR part 71 as follows:

PART 71—DESIGNATION OF CLASS A, CLASS B, CLASS C, CLASS D, AND CLASS E AIRSPACE AREAS; AIRWAYS; ROUTES; AND REPORTING POINTS

1. The authority citation for 14 CFR part 71 continues to read as follows:

Authority: 49 U.S.C. 106(g), 40103, 40113, 40120; E.O. 10854; 24 FR 9565, 3 CFR, 1959–1963 Comp., p. 389.

§ 71.1 [Amended]

2. The incorporation by reference in 14 CFR 71.1 of the Federal Aviation Administration Order 7400.9J, Airspace Designations and Reporting Points, dated August 31, 2001, and effective September 16, 2001, is amended as follows:

* * * * *

Paragraph 6005 Class E airspace areas extending upward from 700 feet or more above the surface of the earth.

* * * * *

AGL OH E5 Mount Vernon, OH [Revised]

Mount Vernon, Knox Community Airport, OH
(Lat. 40°19′43′ N., long. 82°31′26″ W.)
Appleton, OH, VORTAC
(Lat. 40°9′4″ N., long. 82°35′18″ W.)
Mount Vernon, Knox Community Hospital, OH
Point in Space Coordinates
(Lat. 40°24′8″ N., long. 82°27′52″ W.)
That airspace extending upward from 700 feet above the surface within a 6.4-mile radius of Knox County Airport and within 3 miles either side of the Appleton VORTAC 015° radial from the 6.4-mile radius to the Appleton VORTAC, and within a 6-mile radius of the Point in Space serving Knox Community Hospital, excluding that airspace within the Newark, OH, Class E airspace area.

* * * * *

Issued in Des Plaines, Illinois on December 27, 2001.

Nancy B. Shelton,

Manager, Air Traffic Division, Great Lakes Region.

[FR Doc. 02–5630 Filed 3–8–02; 8:45 am]

BILLING CODE 4910–13–M

DEPARTMENT OF TRANSPORTATION

Federal Aviation Administration

14 CFR Part 71

[Airspace Docket No. 01–AGL–16]

Modification of Class E Airspace; Portsmouth, OH

AGENCY: Federal Aviation Administration (FAA), DOT.

ACTION: Direct final rule; request for comments.

SUMMARY: This document modifies Class E airspace at Portsmouth, OH. A Global Positioning System (GPS) Standard Instrument Approach procedure (SIAP) 165° helicopter point in space approach, has been developed for Southern Ohio Medical Center, Portsmouth, OH. Controlled airspace extending upward from 700 feet above the surface is needed to contain aircraft executing the approach. This action modifies existing controlled airspace for Portsmouth, OH, in order to include the point in space approach serving Southern Ohio Medical Center Heliport.

DATES: Effective 0901 UTC, August 08, 2002. Comments must be received on or before April 22, 2002.

ADDRESSES: Send comments on the rule in triplicate to: Federal Aviation Administration, Office of the Regional Counsel, AGL–7, Rules Docket No. 01–AGL–16, 2300 East Devon Avenue, Des Plaines, Illinois 60018. The official docket may be examined in the Office of the Regional Counsel, Federal Aviation Administration, 2300 East Devon Avenue, Des Plaines, Illinois. An informal docket may also be examined during normal business hours at the Air Traffic Division, Airspace Branch, Federal Aviation Administration, 2300 East Devon Avenue, Des Plaines, Illinois.

FOR FURTHER INFORMATION CONTACT: Denis C. Burke, Airspace Branch, AGL–520, Air Traffic Division, Federal Aviation Administration, 2300 East Devon Avenue, Des Plaines, Illinois 60018, telephone (847) 294–7568.

SUPPLEMENTARY INFORMATION: This amendment to 14 CFR part 71 modifies class E airspace at Portsmouth, Ohio, to accommodate aircraft executing the proposed GPS SIAP 165° helicopter point in space approach for Southern Ohio Medical Center Heliport by modifying existing controlled airspace. The area will be depicted on appropriate aeronautical charts. Class E airspace designations are published in Paragraph 6005 of FAA Order 7400.9J, dated August 31, 2001, and effective September 16, 2001, which is incorporated by reference in 14 CFR Sec. 71.1. The Class E airspace designation listed in this document will be published subsequently in the order.

The Direct Final Rule Procedure

The FAA anticipates that this regulation will not result in adverse or negative comment and therefore is issuing it as a direct final rule. A substantial number of previous opportunities provided to the public to comment on substantially identical actions have resulted in negligible adverse comments or objections. Unless a written adverse or negative comment, or a written notice of intent to submit an adverse or negative comment is received within the comment period, the regulation will become effective on the date specified above. After the close of the comment period, the FAA will publish a document document in the **Federal Register** indicating that no adverse or negative comments were received and confirming the date on which the final rule will become effective. If the FAA does receive, within the comment period, an adverse or negative comment, or written notice of intent to submit such a comment, a document will be published in the **Federal Register**. This document may withdraw the direct final rule in whole or in part. After considering the adverse or negative comment, we may publish another direct final rule or publish a notice of proposed rulemaking with a new comment period.

Comments Invited

Although this action is in the form of a final rule and was not preceded by a notice of proposed rulemaking, comments are invited on this rule. Interested persons are invited to comment on this rule by submitting such written data, views, or arguments, as they may desire. Communications should identify the Rules Docket number and be submitted in triplicate to the address specified under the caption **ADDRESSES.** All communications received on or before the closing date for comments will be considered, and this rule may be amended or withdrawn in light of the comments received. Factual information that supports the commenter's ideas and suggestions is extremely helpful in evaluating the effectiveness of this action and determining whether additional rulemaking action is needed.

Comments are specifically invited on the overall regulatory, economic, environmental, and energy aspects of the rule that might suggest a need to modify the rule. All comments submitted will be available, both before and after the closing date for comments, in the Rules Docket for examination by interested persons. A report that summarizes each FAA-public contact concerned with the substance of this action will be filed in the Rules Docket.

Commenters wishing the FAA to acknowledge receipt of their comments submitted in response to this rule must submit a self-addressed, stamped postcard on which the following statement is made: ''Comments to Docket No. 01–AGL–16.'' The postcard

will be date stamped and returned to the commenter.

Agency Findings

The regulations adopted herein will not have substantial direct effects on the States, on the relationship between the national government and the States, or on the distribution of power and responsibilities among the various levels of government. Therefore, it is determined that this final rule will not have federalism implications under Executive Order 13132.

Further, the FAA has determined that this regulation is noncontroversial and unlikely to result in adverse or negative comments and only involves an established body of technical regulations that require frequent and routine amendments to keep them operationally current. Therefore, I certify that this regulation (1) is not a ''significant regulatory action'' under Executive Order 12866; (2) is not a ''significant rule'' under DOT Regulatory Policies and Procedures (44 FR 11034; February 26, 1979); and (3) if promulgated, will not have a significant economic impact, positive or negative, on a substantial number of small entities under the criteria of the Regulatory Flexibility Act. Since this rule involves routine matters that will only affect air traffic procedures and air navigation, it does not warrant preparation of a Regulatory Flexibility Analysis because the anticipated impact is so minimal.

List of Subjects in 14 CFR Part 71

Airspace, Incorporation by reference, Navigation (air).

Adoption of the Amendment

Accordingly, pursuant to the authority delegated to me, the Federal Aviation Administration amends 14 CFR part 71 as follows:

PART 71—DESIGNATION OF CLASS A, CLASS B, CLASS C, CLASS D, AND CLASS E AIRSPACE AREAS; AIRWAYS; ROUTES; AND REPORTING POINTS

1. The authority citation for 14 CFR part 71 continues to read as follows:

Authority: 49 U.S.C. 106(g), 40103, 40113, 40120; E.O. 10854; 24 FR 9565, 3 CFR, 1959–1963 Comp., p. 389.

§ 71.7 [Amended]

2. The incorporation by reference in 14 CFR 71.1 of the Federal Aviation Administration Order 7400.9J, Airspace Designations and Reporting Points, dated August 31, 2001, and effective September 16, 2001, is amended as follows:

* * * * *

Paragraph 6005 Class E airspace areas extending upward from 700 feet or more above the surface of the earth.

* * * * *

AGL OH E5 Portsmouth, OH [Revised]

Portsmouth, Greater Portsmouth Regional Airport, OH
(Lat. 38°50′25″ N., long. 82°50′51″ W.)
Portsmouth NDB
(Lat. 38°46′54″ N., long. 82°50′42″ W.)
Portsmouth, Southern Ohio Medical Center, OH
Point in Space Coordinates
(Lat. 38°45′5″ N., long. 83°00′19″ W.)

That airspace extending upward from 700 feet above the surface within a 6.4-mile radius of the Greater Portsmouth Regional Airport and within 2.7 miles each side of the 178° bearing from the Portsmouth NDB extending from the 6.4-mile radius to 10.4 miles south of the airport, and within a 6.0-mile radius of the Point in Space serving Southern Ohio Medical Center.

* * * * *

Issued in Des Plaines, Illinois on December 27, 2001.

Nancy B. Shelton,

Manager, Air Traffic Division, Great Lakes Region.

[FR Doc. 02–5629 Filed 3–8–02; 8:45 am]

BILLING CODE 4910–13–M

DEPARTMENT OF TRANSPORTATION

Federal Aviation Administration

14 CFR Part 71

[Airspace Docket No. 01–AGL–20]

Modification of Class E Airspace; Washington Court House, OH

AGENCY: Federal Aviation Administration (FAA), DOT.

ACTION: Direct final rule; request for comments.

SUMMARY: This document modifies Class E airspace at Washington Court House, OH. A Global Positioning System (GPS) Standard Instrument Approach Procedure (SIAP) 305° helicopter point in space approach, has been developed for Fayette County Memorial Hospital, Washington Court House, OH. Controlled airspace extending upward from 700 feet above the surface is needed to contain aircraft executing the approach. This action modifies existing controlled airspace for Washington Court House, OH, in order to include the point in space approach serving Fayette County Memorial Hospital.

DATES: Effective 0901 UTC, August 08, 2002. Comments must be received on or before April 22, 2002.

ADDRESSES: Send comments on the rule in triplicate to: Federal Aviation Administration, Office of the Regional Counsel, AGL–7 Rules Docket No. 01–AGL–20, 2300 East Devon Avenue, Des Plaines, Illinois 60018. The official docket may be examined in the Office of the Regional Counsel, Federal Aviation Administration, 2300 East Devon Avenue, Des Plaines, Illinois. An informal docket may also be examined during normal business hours at the Air Traffic Division, Airspace Branch, Federal Aviation Administration, 2300 East Devon Avenue, Des Plaines, Illinois.

FOR FURTHER INFORMATION CONTACT: Denis C. Burke, Airspace Branch, AGL–520, Air Traffic Division, Federal Aviation Administration, 2300 East Devon Avenue, Des Plaines, Illinois 60018, telephone (847) 294–7568.

SUPPLEMENTARY INFORMATION: This amendment to 14 CFR part 71 modifies Class E airspace at Washington Court House, Ohio, to accommodate aircraft executing the proposed GPS SIAP 305° helicopter point in space approach for Fayette County Memorial Hospital by modifying existing controlled airspace. The area will be depicted on appropriate aeronautical charts. Class E airspace designations are published in Paragraph 6005 of FAA Order 7400.9J, dated August 31, 2001, and effective September 16, 2001, which is incorporated by reference in 14 CFR Sec. 71.1. The Class E airspace designation listed in this document will be published subsequently in the order.

The Direct Final Rule Procedure

The FAA anticipates that this regulation will not result in adverse or negative comment and therefore is issuing it as a direct final rule. A substantial number of previous opportunities provided to the public to comment on substantially identical actions have resulted in negligible adverse comments or objections. Unless a written adverse or negative comment, or a written notice of intent to submit an adverse or negative comment is received within the comment period, the regulation will become effective on the date specified above. After the close of the comment period, the FAA will publish a document in the **Federal Register** indicating that no adverse or negative comments were received and confirming the date on which the final rule will become effective. If the FAA does receive, within the comment period, an adverse or negative comment,

or written notice of intent to submit such a comment, a document will be published in the **Federal Register**. This document may withdraw the direct final rule in whole or in part.

After considering the adverse or negative comment, we may publish another direct final rule or publish a notice of proposed rulemaking with a new comment period.

Comments Invited

Although this action is in the form of a final rule and was not preceded by a notice of proposed rulemaking, comments are invited on this rule. Interested persons are invited to comment on this rule by submitting such written data, views, or arguments, as they may desire. Communications should identify the Rules docket number and be submitted in triplicate to the address specified under the caption **ADDRESSES**. All communications received on or before the closing date for comments will be considered, and this rule may be amended or withdrawn in light of the comments received. Factual information that supports the commenter's ideas and suggestions is extremely helpful in evaluating the effectiveness of this action and determining whether additional rulemaking action is needed.

Comments are specifically invited on the overall regulatory, economic, environmental, and energy aspects of the rule that might suggest a need to modify the rule. All comments submitted will be available, both before and after the closing date for comments, in the Rules Docket for examination by interested persons. A report that summarizes each FAA-public contact concerned with the substance of this action will be filed in the Rules Docket.

Commenters wishing the FAA to acknowledge receipt of their comments submitted in response to this rule must submit a self-addressed, stamped postcard on which the following statement is made: ''Comments to Docket No. 01–AGL–20.'' The postcard will be date stamped and returned to the commenter.

Agency Findings

The regulations adopted herein will not have substantial direct effects on the States, on the relationship between the national government and the States, or on the distribution of power and responsibilities among the various levels of government. Therefore, it is determined that this final rule will not have federalism implications under Executive Order 13132.

Further, the FAA has determined that this regulation is noncontroversial and unlikely to result in adverse or negative comments and only involves an established body of technical regulations that require frequent and routine amendments to keep them operationally current. Therefore, I certify that this regulation (1) is not a ''significant regulatory action'' under Executive Order 12866; (2) is not a ''significant rule'' under DOT Regulatory Policies and Procedures (44 FR 11034; February 26, 1979); and (3) if promulgated, will not have a significant economic impact, positive or negative, on a substantial number of small entities under the criteria of the Regulatory Flexibility Act. Since this rule involves routine matters that will only affect air traffic procedures and air navigation, it does not warrant preparation of a Regulatory Flexibility Analysis because the anticipated impact is so minimal.

List of Subjects in 14 CFR Part 71

Airspace, Incorporation by reference, Navigation (air).

Adoption of the Amendment

Accordingly, pursuant to the authority delegated to me, the Federal Aviation Administration amends 14 CFR Part 71 as follows:

PART 71—DESIGNATION OF CLASS A, CLASS B, CLASS C, CLASS D, AND CLASS E AIRSPACE AREAS; AIRWAYS ROUTES; AND REPORTING POINTS

1. The authority citation for 14 CFR Part 71 continues to read as follows:

Authority: 49 U.S.C. 106(g), 40103, 40113, 40120; E.O. 10854; 24 FR 9565, 3 CFR 1959–1963 Comp., p. 389.

§ 71.1 [Amended]

2. The incorporation by reference in 14 CFR 71.1 of the Federal Aviation Administration Order 7400.9J, Airspace Designations and Reporting Points, dated August 31, 2001, and effective September 16, 2001, is amended as follows:

* * * * *

Paragraph 6005 Class E airspace areas extending upward from 700 feet or more above the surface of the earth.

* * * * *

AGL OH E5 Washington Court House, OH [Revised]

Washington Court House, Fayette County Airport, OH
(Lat. 39°34′13″ N., long. 83°25′14″ W.)
Court House NDB
(Lat. 39°35′58″ N., long. 83°23′32″ W.)
Washington County Court House, Fayette County Memorial Hospital, OH
Point in Space Coordinates
(Lat. 39°32′18″ N., long. 82°25′15″ W.)

That airspace extending upward from 700 feet above the surface within a 6.5-mile radious of the Fayette County Airport and within 6.4 miles either side of the 037° bearing from the Court House NDB, extending from the 6.5-mile radius to 7 miles northeast of the NDB, and within 2.2 miles either side of the 037° bearing from the Court House NDB, extending from the 6.5-mile radius to 10 miles northeast of the NDB and within a 6 mile radius of the Point in Space serving Fayette County Memorial Hospital.

* * * * *

Issued in Des Plaines, Illinois on December 27, 2001.

Nancy B. Shelton,

Manager, Air Traffic Division, Great Lakes Region.

[FR Doc. 02–5628 Filed 3–8–02; 8:45 am]

BILLING CODE 4910–13–M

DEPARTMENT OF TRANSPORTATION

Federal Aviation Administration

14 CFR Part 71

[Airspace Docket No. 01–AGL–18]

Establishment of Class E Airspace; Flint, MI

AGENCY: Federal Aviation Administration (FAA), DOT.

ACTION: Direct final rule; request for comments.

SUMMARY: This document establishes Class E airports at Flint, Bishop International Airport, MI. Bishop International Airport is served by Federal Aviation Regulations Part 135 (14 CFR 135) air taxi operations, and Federal Aviation Regulations Part 121 (14 CFR 121) air carrier operations. Controlled airspace extending upward from the surface is needed to contain aircraft executing instrument flight procedures and provide a safer operating environment when the control tower is closed. The airport meets the minimum communications and weather observation and reporting requirements for controlled airspace extending upward from the surface. This action creates controlled airspace with a 4.4-mile radius for this airport.

DATES: Effective 0901 UTC, August 8, 2002. Comments must be received on or before April 22, 2002.

ADDRESSES: Send comments on the rule in triplicate to: Federal Aviation Administration, Office of the Regional Counsel, AGL–7, Rules Docket No. 01–AGL–18, 2300 East Devon Avenue, Des Plaines, Illinois 60018. The official docket may be examined in the Office of the Regional Counsel, Federal Aviation Administration, 2300 East

Devon Avenue, Des Plaines, Illinois. An informal docket may also be examined during normal business hours at the Air Traffic Division, Airspace Branch, Federal Aviation Administration, 2300 East Devon Avenue, Des Plaines, Illinois.

FOR FURTHER INFORMATION CONTACT: Denis C. Burke, Airspace Branch, AGL–520, Air Traffic Division, Federal Aviation Administration, 2300 East Devon Avenue, Des Plaines, Illinois 60018, telephone (847) 294–7568.

SUPPLEMENTARY INFORMATION: This amendment to 14 CFR part 71 establishes Class E airspace at Flint, Bishop International Airport, MI, to accommodate part 135 air taxi aircraft, and part 121 air carrier aircraft instrument flight rules procedures during periods when the control tower is closed. The area will be depicted on appropriate aeronautical charts. Class E airspace designations for airspace areas extending upward from the surface of the earth are published in Paragraph 6002 of FAA Order 7400.9J, dated August 31, 2001, and effective September 16, 2001, which is incorporated by reference in 14 CFR Sec. 71.1. The Class E airspace designation listed in this document will be published subsequently in the order.

The Direct Final Rule Procedure

The FAA anticipates that this regulation will not result in adverse or negative comment and therefore is issuing it as a direct final rule. A substantial number of previous opportunities provided to the public to comment on substantially identical actions have resulted in negligible adverse comments or objections. Unless a written adverse or negative comment, or a written notice of intent to submit an adverse or negative comment is received within the comment period, the regulation will become effective on the date specified above. After the close of the comment period, the FAA will publish a document in the Federal Register indicating that no adverse or negative comments were received and confirming the date on which the final rule will become effective. If the FAA does receive, within the comment period, an adverse or negative comment, or written notice of intent to submit such a comment, a document will be published in the **Federal Register**. This document may withdraw the direct final rule in whole or in part. After considering the adverse or negative comment, we may publish another direct final rule or publish a notice of proposed rulemaking with a new comment period.

Comments Invited

Although this action is in the form of a final rule and was not preceded by a notice of proposed rulemaking, comments are invited on this rule. Interested persons are invited to comment on this rule by submitting such written data, views, or arguments, as they may desire. Communications should identify the Rules Docket number and be submitted in triplicate to the address specified under the caption **ADDRESSES**. All communications received on or before the closing date for comments will be considered, and this rule may be amended or withdrawn in light of the comments received. Factual information that supports the commenter's ideas and suggestions is extremely helpful in evaluating the effectiveness of this action and determining whether additional rulemaking action is needed.

Comments are specifically invited on the overall regulatory, economic, environmental, and energy aspects of the rule that might suggest a need to modify the rule. All comments submitted will be available, both before and after the closing date for comments, in the Rules Docket for examination by interested persons. A report that summarizes each FAA-public contact concerned with the substance of this action will be filed in the Rules Docket.

Commenters wishing the FAA to acknowledge receipt of their comments submitted in response to this rule must submit a self-addressed, stamped postcard on which the following statement is made: ''Comments to Docket No. 01–AGL–18.'' The postcard will be date stamped and returned to the commenter.

Agency Findings

The regulations adopted herein will not have substantial direct effects on the States, on the relationship between the national government and the States, or on the distribution of power and responsibilities among the various levels of government. Therefore, it is determined that this final rule will not have federalism implications under Executive Order 13132.

Further, the FAA has determined that this regulation is noncontroversial and unlikely to result in adverse or negative comments and only involves an established body of technical regulations that require frequent and routine amendments to keep them operationally current. Therefore, I certify that this regulation (1) is not a ''significant regulatory action'' under Executive Order 12866; (2) is not a ''significant rule'' under DOT Regulatory Policies and Procedures (44 FR 11034; February 26, 1979); and (3) if promulgated, will not have a significant economic impact; positive or negative, on a substantial number of small entities under the criteria of the Regulatory Flexibility Act. Since this rule involves routine matters that will only affect air traffic procedures and air navigation, it does not warrant preparation of a Regulatory Flexibility Analysis because the anticipated impact is so minimal.

List of Subjects in 14 CFR Part 71

Airspace, Incorporation by reference, Navigation (air).

Adoption of the Amendment

Accordingly, pursuant to the authority delegated to me, the Federal Aviation Administration amends 14 CFR part 71 as follows:

PART 71—DESIGNATION OF CLASS A, CLASS B, CLASS C, CLASS D, AND CLASS E AIRSPACE AREAS; AIRWAYS; ROUTES; AND REPORTING POINTS

1. The authority citation for 14 CFR part 71 continues to read as follows:

Authority: 49 U.S.C. 106(g), 40103, 40113, 40120; E.O. 10854; 24 FR 9565, 3 CFR, 1959–1963 Comp., p. 389.

§ 71.1 [Amended]

2. The incorporation by reference in 14 CFR 71.1 of the Federal Aviation Administration Order 7400.9J, Airspace Designations and Reporting Points, dated August 31, 2001, and effective September 16, 2001, is amended as follows:

* * * * *

Paragraph 6002 Class E airspace areas designated as a surface area.

* * * * *

AGL MI E2 Flint, MI [New]

Flint, Bishop International Airport, MI
(Lat. 42°57′56″ N., long. 83°44′37″ W.)

That airspace extending upward from the surface within a 4.4-mile radius of the Flint, Bishop International Airport.

This Class E airspace area is effective during the specific dates and times established in advance by Notice to airmen. The effective date and time will thereafter be continuously published in the Airport/Facility Directory.

* * * * *

Issued in Des Plaines, Illinois on December 27, 2001.

Nancy B. Shelton,

Manager, Air Traffic Division, Great Lakes Region.

[FR Doc. 02–5627 Filed 3–8–02; 8:45 am]

BILLING CODE 4910–13–M

DEPARTMENT OF TRANSPORTATION

Federal Aviation Administration

14 CFR Part 71

[Airspace Docket No. 01–AWP–30]

Modification of Class E Airspace; Twentynine Palms, CA

AGENCY: Federal Aviation Administration (FAA), DOT.

ACTION: Final Rule.

SUMMARY: This action modifies the Class E airspace area at Twentynine Palms, CA. The establishment of an Area Navigation (RNAV) Global Positing System (GPS) Standard Instrument Approach Procedure (SIAP) RNAV (GPS) Runway (RWY) 26 SIAP to Twentynine Palms Airport, Twentynine Palms, CA has made action necessary. Additional controlled airspace extending upward from 700 feet or more above the surface of the earth is needed to contain aircraft executing the RNAV (GPS) RWY 26 SIAP to Twentynine Palms Airport. The intended effect of this action is to provide adequate controlled airspace for Instrument Flight Rules operations at Twentynine Palms Airport, Twentynine Palms, CA.

EFFECTIVE DATE: 0901 UTC April 18, 2002.

FOR FURTHER INFORMATION CONTACT: Jeri Carson, Airspace Specialist, Airspace Branch, AWP–520, Air Traffic Division, Western-Pacific Region, Federal Aviation Administration, 15000 Aviation Boulevard, Lawndale, California 90261, telephone (310) 725–6611.

SUPPLEMENTARY INFORMATION:

History

On January 22, 2002, the FAA proposed to amend 14 CFR part 71 by modifying the Class E airspace area at Twentynine Palms, CA (67 FR 2836). Additional controlled airspace extending upward from 700 feet or more above the surface is needed to contain aircraft executing the RNAV (GPS) RWY 26 SIAP to Twentynine Palms Airport. This action will provide adequate controlled airspace for aircraft executing the RNAV (GPS) RWY 26 SIAP to Twentynine Palms Airport, Twentynine Palms, CA.

Interested parties were invited to participate in this rulemaking, proceeding by submitting written comments on the proposal to the FAA. No comments to the proposal were received. Class E airspace designations for airspace extending from 700 feet or more above the surface of the earth are published in paragraph 6005 of FAA Order 7400.9J, dated August 31, 2001, and effective September 16, 2001, which is incorporated by reference in 14 CFR 71.1. The Class E airspace designation listed in this document will be published subsequently in the Order.

The Rule

This amendment to 14 CFR part 71 modifies the Class E airspace area at Twentynine Palms, CA. The establishment of a RNAV (GPS) RWY 26 SIAP to Twentynine Palms Airport has made this action necessary. The effect of this action will provide adequate airspace for aircraft executing the RNAV (GPS) RWY 26 SIAP to Twentynine Palms Airport, Twentynine Palms, CA.

The FAA has determined that this regulation only involves an established body of technical regulations for which frequent and routine amendments are necessary to keep them operationally current. Therefore, this regulation—(1) is not a ''significant regulatory action'' under Executive Order 12866; (2) is not a ''significant rule'' under DOT Regulatory Policies and Procedures (44 FR 11034; February 26, 1979); and (3) does not warrant preparation of a Regulatory Evaluation as the anticipated impact is so minimal. Since this is a routine matter that will only affect air traffic procedures and air navigation, it is certified that this rule will not have a significant economic impact on a substantial number of small entities under the criteria of the Regulatory Flexibility Act.

List of Subjects in 14 CFR Part 71

Airspace, Incorporation by reference, Navigation (air).

Adoption of the Amendment

In consideration of the foregoing, the Federal Aviation Administration amends 14 CFR part 71 as follows:

PART 71—DESIGNATION OF CLASS A, CLASS B, CLASS C, CLASS D, AND CLASS E AIRSPACE AREAS; ROUTES; AND REPORTING POINTS.

1. The authority citation for 14 CFR part 71 continues to read as follows:

Authority: 49 U.S.C. 106(g), 40103, 40113, 40120; E.O. 10854, 24 FR 9565, 3 CFR, 1959–1963 Comp., p. 389; 14 CFR 11.69.

§ 71.1 [Amended]

2. The incorporation by reference in 14 CFR 71.1 of the Federal Aviation Administration Order 7400.9J, Airspace Designations and Reporting Points, dated August 31, 2001, and effective September 16, 2001, is amended as follows:

Paragraph 6005 Class E airspace areas extending upward from 700 feet or more above the surface of the earth.

* * * * *

AWP CA E5 Twentynine Palms, CA [Revised]

Twentynine Palms Airport, CA
(Lat. 34°07′56″ N, long. 115°56′45″ W.)

That airspace extending upward from 700 feet above the surface within a 6.6 mile radius of the Twentynine Palms Airport. That airspace extending upward from 1200 feet above the surface bounded by a line beginning at lat. 34°17′00″ N, long. 115°25′03″ W.; to lat. 33°28′00″ N, long. 115°25′03″ W.; to lat. 33°28′00″ N, long. 116°18′03″ W.; to lat. 34°17′00″ W, long. 116°18′03″ W., thence to the point of beginning; excluding that airspace within Restricted Areas R–2501E, R–2501S, and R–2507.

* * * * *

Issued in Los Angeles, California, on February 22, 2002.

John Clancy,

Manager, Air Traffic Division, Western-Pacific Region.

[FR Doc. 02–5814 Filed 3–8–02; 8:45 am]

BILLING CODE 4910–13–M

DEPARTMENT OF DEFENSE

Department of the Army, Corps of Engineers

33 CFR Part 334

United States Navy Restricted Area, Hampton Roads and Willoughby Bay, Virginia

AGENCY: United States Army Corps of Engineers, DoD.

ACTION: Final rule.

SUMMARY: The U.S. Army Corps of Engineers is amending its regulations which establish a restricted area in waters adjacent to the Norfolk Naval Base at Norfolk, Virginia. This amendment will close off an open area on the south side of the base and changes the enforcement responsibility from the base commander to the Commander, Navy Region, Mid-Atlantic. The regulations are necessary to safeguard Navy vessels and United States Government facilities from sabotage and other subversive acts, accidents, or incidents of similar nature. These regulations are also necessary to protect the public from potentially hazardous conditions which may exist as a result of Navy use of the area.

EFFECTIVE DATE: April 10, 2002.

ADDRESSES: U.S. Army Corps of Engineers, ATTN: CECW–OR, 441 G Street, NW., Washington, DC 20314–1000.

FOR FURTHER INFORMATION CONTACT: Mr. Frank Torbett, Headquarters Regulatory Branch, Washington, DC at (202) 761–4618, or Mr. Rick Henderson, Corps of Engineers, Norfolk District, Regulatory Branch, at (757) 441–7653.

SUPPLEMENTARY INFORMATION: Pursuant to its authorities in section 7 of the Rivers and Harbors Act of 1917 (40 Stat. 266; 33 U.S.C. 1) and Chapter XIX, of the Army Appropriations Act of 1919 (40 Stat. 892; 33 U.S.C. 3) the Corps is amending the restricted area regulations in 33 CFR part 334 by amending section 334.300 which establishes a restricted area in waters adjacent to the Norfolk Naval Base at Norfolk, Virginia.

Procedural Requirements

a. Review Under Executive Order 12866

This rule is issued with respect to a military function of the Defense Department and the provisions of Executive Order 12866 do not apply.

b. Review Under the Regulatory Flexibility Act

This rule has been reviewed under the Regulatory Flexibility Act (Public Law 96–354) which requires the preparation of a regulatory flexibility analysis for any regulation that will have a significant economic impact on a substantial number of small entities (i.e., small businesses and small governments). The Corps expects that the economic impact of this restricted area would have practically no impact on the public, no anticipated navigational hazard or interference with existing waterway traffic and accordingly, certifies that this proposal will have no significant economic impact on small entities.

c. Review Under the National Environmental Policy Act

The Norfolk District has prepared an Environmental Assessment (EA) for this action. We have concluded, based on the minor nature of the proposed additional restricted area regulations, that this action will not have a significant impact to the quality of the human environment, and preparation of an Environmental Impact Statement (EIS) is not required. The EA may be reviewed at the Norfolk District office listed at the end of **FOR FURTHER INFORMATION CONTACT**, above.

d. Unfunded Mandates Act

This rule does not impose an enforceable duty among the private sector and, therefore, is not a Federal private sector mandate and is not subject to the requirements of Section 202 or 205 of the Unfunded Mandates Act. We have also found under section 203 of the Act, that small Governments will not be significantly and uniquely affected by this rulemaking.

e. Submission to Congress and the General Accounting Office

Pursuant to Section 801(a)(1)(A) of the Administrative Procedure Act, as amended by the Small Business Regulatory Enforcement Fairness Act of 1996, the Army has submitted a report containing this Rule to the U.S. Senate, the U.S. House of Representatives, and the Comptroller General of the General Accounting Office. This Rule is not a major Rule within the meaning of Section 804(2) of the Administrative Procedure Act, as amended.

List of Subjects in 33 CFR Part 334

Danger zones, Marine safety, Navigation (water), Restricted areas, Waterways.

For the reasons set out in the preamble, the Corps amends 33 CFR part 334 as follows:

PART 334—DANGER ZONE AND RESTRICTED AREA REGULATIONS

1. The authority citation for part 334 continues to read as follows:

Authority: 40 Stat. 266 (33 U.S.C. 1) and 40 Stat. 892 (33 U.S.C. 3).

2. Revise §334.300 to read as follows:

§ 334.300 Hampton Roads and Willoughby Bay, Norfolk Naval Base, Naval Restricted Area, Norfolk, Virginia

(a) *The area.* (1) The waters within an area beginning at latitude 36°55′55″ N, longitude 76°20′02″ W; thence northwesterly to latitude 36°56′00″ N, longitude 76°20′08″ W; thence northerly along the eastern limit of Norfolk Harbor Channel to latitude 36°57′52″ N, longitude 76°20′00″ W; thence easterly to latitude 36°57′52″ N, longitude 76°19′35″ W; thence to latitude 36°57′47.7″ N, 76°18′57″ W; thence southeasterly to latitude 36°57′26″ N, longitude 76°18′42″ W; thence easterly to latitude 36°57′26.2″ N, longitude 76°17′55.2″ W; thence southerly to latitude 36°57′05″ N, longitude 76°17′52″ W; thence southeasterly to latitude 36°56′56.2″ N, longitude 76°17′27″ W; thence northeasterly to latitude 36°57′10″ N, latitude 76°16′29″ W; thence to the shoreline at latitude 36°57′18.8″ N, longitude 76°16′22″ W at the Naval Air Station.

(2) Beginning at a point on the Naval Station shore at latitude 36°56′37.5″ N, longitude 76°19′44″ W; thence westerly and northerly along the breakwater to its extremity at latitude 36°56′41.5″ N, longitude 76°19′54″ W; thence westerly to a point on the eastern limit of Norfolk Harbor Channel at latitude 36°56′41.5″ N, longitude 76°20′05.5″ W; thence northerly along the eastern limit of Norfolk Harbor Channel to latitude 36°57′52″ N, longitude 76°20′00″ W; thence easterly to latitude 36°57′52″ N, longitude 76°19′35″ W; thence to latitude 36°57′47.7″ N., longitude 73°18′57″ W; thence southeasterly to latitude 36°57′26″ N, longitude 76°18′42″ W; thence easterly to latitude 36°57′26.2″ N, longitude 76°17′55.2″ W; thence southerly to latitude 36°57′05″ N, longitude 76°17′52″ W; thence southeasterly to latitude 36°56′56.2″ N, longitude 76°17′27″ W; thence northeasterly to latitude 36°57′10″ N, longitude 76°16′29″ W; and thence to the shoreline at latitude 36°57′18.8″ N, longitude 76°16′22″ W, at the Naval Air Station.

(b) *The regulation.* No vessel or persons may enter the restricted area unless specific authorization is granted by the Commander, Navy Region, Mid-Atlantic and/or other persons or agencies as he/she may designate.

(c) *Enforcement.* The regulation in this section, promulgated by the United States Army Corps of Engineers, shall be enforced by the Commander, Navy Region, Mid-Atlantic, and/or such agencies or persons as he/she may designate.

Dated: February 7, 2002.

Charles M. Hess,

Chief, Operations Division, Directorate of Civil Works.

[FR Doc. 02–5654 Filed 3–8–02; 8:45 am]

BILLING CODE 3710–92–P

ENVIRONMENTAL PROTECTION AGENCY

40 CFR Parts 51, 52, 96, and 97

[FRL–7156–3]

Availability of Additional Documents for the Response to the Remands in the Ozone Transport Cases Concerning the Method for Computing Growth for Electric Generating Units

AGENCY: Environmental Protection Agency (EPA).

ACTION: Notice of data availability for the NO_X SIP Call and the section 126 rule.

SUMMARY: The EPA is providing notice that it has placed in the dockets for the two main rulemakings concerning ozone-smog transport in the eastern part of the United States—the Nitrogen Oxides State Implementation Plan Call (NO_X SIP Call) and the Section 126

Rule—additional data relevant to the remands by the U.S. Court of Appeals for the District of Columbia Circuit (D.C. Circuit) concerning growth rates for seasonal heat input by electric generating units (EGUs). In both the NO_X SIP Call and Section 126 rulemakings, EPA determined control obligations with respect to EGUs through the same computation, which included, as one component, estimates of growth in heat input by the EGUs from 1996 to 2007. In two cases decided last year challenging the Section 126 rulemaking and a pair of rulemakings that made technical corrections to the NO_X SIP Call, the D.C. Circuit considered challenges to EPA's calculation of the growth estimate and its use of growth factors. In virtually identical decisions, the Court remanded the growth component to EPA for a better response to certain data presented by the affected States and industry concerning actual heat input, and for a better explanation of EPA's methodology. The EPA is in the process of responding to those remands.

On August 3, 2001, EPA published a notice of data availability announcing the placement, in the dockets for the NO_X SIP Call and Section 126 Rule, of new data concerning EGU growth rates (66 FR 40609 (NODA–1)). In NODA–1, EPA articulated its preliminary view that its growth calculations were reasonable and could be supported with a more robust explanation that takes into account the Court's concerns.

Today's document informs that EPA is considering additional data that it has recently placed, or will soon place, in the docket for the NO_X SIP Call Rule, Docket A–96–56, and that have been incorporated by reference in the docket for the Section 126 Rule, Docket No. A–97–43.

By March 29, 2002, EPA intends to determine whether it will confirm its preliminary view that the growth calculations were reasonable, or change those calculations. If EPA decides to confirm the growth calculations, it intends to complete its response to the Court's remands by that date.

Detailed background information describing the rulemakings, court decisions, and remands may be found in NODA–1.

DATES: Documents were placed in the docket on or about February 28, 2002.

ADDRESSES: Copies of all of the documents have been placed, or will shortly be placed, in the docket for the NO_X SIP Call rule, Docket No. A–96–56, and have been incorporated by reference in the docket for the Section 126 Rule, Docket No. A–97–43. These new documents, and other documents relevant to these rulemakings, are available for inspection at the Docket Office, located at 401 M Street SW., Room M–1500, Washington, DC 20460, between 8:00 a.m. and 5:30 p.m., Monday through Friday, excluding legal holidays. A reasonable fee may be charged for copying. Some of the documents have also been made, or will shortly be made, available in electronic form at the following EPA website: *http://www.epa.gov/airmarkets/fednox/126noda2/index.html.*

FOR FURTHER INFORMATION CONTACT: Questions concerning today's document should be directed to Kevin Culligan, Office of Atmospheric Programs, Clean Air Markets Division, 6204M, 1200 Pennsylvania Ave. NW., Washington, DC 20004, telephone (202) 564–9172, e-mail *culligan.kevin@epa.gov;* or Howard J. Hoffman, Office of General Counsel, 2344A, 1200 Pennsylvania Ave. NW., Washington, DC 20004, telephone (202) 564–5582, e-mail *hoffman.howard@epa.gov.* General questions about the Section 126 Rule or the NO_X SIP Call may be directed to Jan King, Office of Air Quality Planning and Standards, Air Quality Strategies and Standards Division, C539–02, Research Triangle Park, NC, 27711, telephone (919) 541–5665, e-mail *king.jan@epa.gov.*

SUPPLEMENTARY INFORMATION: The EPA has placed, or will shortly place, the information described below in the NO_X SIP Call rulemaking docket, A–96–56; and is incorporating it by reference into the Section 126 rulemaking docket, A–97–43.

XV C–01 U.S. Department of Energy web pages—21 SIP Call States—''Estimates of Energy Input at Electric Utilities, 1960–1999'' from *www.eia.doe.gov/emeu/sep/__/consum/eu.htm* where__is the 2 letter identifier for each State.

XV C–02 U.S. Department of Energy; Energy Information Administration (EIA); Electric Power Annual 1999 Volume 1—August 2000.

XV C–03 Department of Energy; Energy Information Administration; Electric Power Annual 2000 Volume 1—August 2001. Available at *www.eia.doe.gov/cneaf/electricity/epav1/epav1.pdf.*

XV C–05 Memorandum from Bill Neuffer to Docket (Feb. 22, 2002): Excel spreadsheets—21 SIP call States—Yearly Utility Fossil Heat inputs;'' ''Summary of 8 Yr Decreases in Yearly Fossil Fuel Heat Input—Electric Utilities.'' (Feb. 22, 2002)

XV C–07 Press releases on nuclear uprates in IL.

XV C–08 Press releases on repowering coal units to combined cycle units in IN.

XV C–09 Press release on boiler optimization.

XV C–10 1995–2001 ozone season heat input data for EGUs in the following States: AL, CT, DC, DE, GA, IL, IN, KY, MA, MD, MI, MO, NC, NJ, NY, OH, PA, RI, SC, TN, VA, and WV, including:

(a) For 1995—2000, this data is on a unit-by-unit basis for all units.

(b) For 2001, data for acid rain units is based on monitoring location and has not been converted to a unit-by-unit basis. All data for acid rain units is based on data reported to EPA. For other units it is based on data reported to EIA or data reported to EPA as part of the SIP Call/Section 126 rulemaking proccess.

XV C–11 Press release documenting off-line status of Cook Units 1 and 2.

XV C–12 Summary of EIA Electric Sales Data for the 1995 through 2001 ozone season.

XV C–13 Northeast Electric Reliability Council Map.

XV C–14 EIA Inventory of Electric Utility Power Plants in the US, 1999.

XV C–15 EIA Inventory of Electric Utility Power Plants in the US, 1998.

XV C–16 EIA Inventory of Electric Utility Power Plants in the US, 1997.

(For XV C–14, XV C–15, and XV C–16 above, see website *http://www/eia.doe.gov/cneaf/electricity/ipp/ippbackissues.html).*

XV C–17 EPA Region 4 National Combustion Turbine Spreadsheet maintained at *http://www.epa.gov/region4/air/permits/national_ct_list.xls)* as of February 2002.

The EPA may place additional documents in the docket, and if EPA does so, EPA will announce their availability by posting a notice on the *http://www.epa.gov/airmarkets/fednox/126noda2/index.html* website.

Dated: February 28, 2002.

John D. Bachman,

Acting Director, Office of Air Quality Planning and Standards.

[FR Doc. 02–5742 Filed 3–8–02; 8:45 am]

BILLING CODE 6560–50–P

FEDERAL COMMUNICATIONS COMMISSION

47 CFR Part 54

[CC Docket 96–45; FCC 02–41]

Federal-State Joint Board on Universal Service

AGENCY: Federal Communications Commission.

ACTION: Final rule.

SUMMARY: In this document, the Commission asks the Joint Board to begin a comprehensive review of the non-rural high-cost support mechanism. In light of the need to act expeditiously on the issues, the Commission will delay initiation of a proceeding to consider future action on the rural high-cost support mechanism.

DATES: Comments are due April 10, 2002. Reply comments are due April 25, 2002.

FOR FURTHER INFORMATION CONTACT: Katie King at (202) 418–7491 or Jennifer Schneider at (202) 418–0425 in the Accounting Policy Division, Common Carrier Bureau.

SUPPLEMENTARY INFORMATION: This is a summary of the Commission's *Order* in CC Docket No. 96–45 released on February 15, 2002. The Order is related to a *Notice of a Proposed Rulemaking* (NPRM) that is published elsewhere in this issue. The full text of this document is available for public inspection during regular business hours in the FCC Reference Center, Room CY–A257, 445 12th Street, SW., Washington, DC 20554.

I. Introduction

1. In this Order, the Commission refers the record collected in the NPRM to the Joint Board for a recommended decision. In the NPRM, the Commission seeks comment on issues from the *Ninth Report and Order*, 66 FR 67416, December 1, 1999, remanded by the United States Court of Appeals for the Tenth Circuit. As part of the referral, the Commission also asks the Joint Board to begin a comprehensive review of the non-rural high-cost support mechanism. In light of the need to act expeditiously on the issues on remand, the Commission will delay initiation of a proceeding to consider future action on the rural high-cost support mechanism.

II. The Commission's Plan for Universal Service and Joint Board Referral

2. The Joint Board has previously considered and given recommendations on many of the issues in this docket. The Commission concludes that further Joint Board input will be beneficial for consideration of the issues on remand. Accordingly, the Commission refers the issues described in the NPRM, and the record developed herein, to the Joint Board for a recommended decision. Specifically, the Commission asks the Joint Board to provide a recommended decision on (1) how the Commission should define the key statutory terms ''reasonably comparable'' and ''sufficient''; (2) whether, in light of the interpretation of those key statutory terms, the Commission can and should maintain the previously established benchmark or, in the alternative, should adopt a new benchmark or benchmarks; and (3) how the Commission should induce states to implement state universal service policies. The Commission intends these referral issues to encompass the review of the non-rural mechanism that the Commission previously stated would occur by January 1, 2003. At their core, the issues on remand require an examination of the non-rural mechanism. The Commission directs the Joint Board to base its recommended decision on the record developed from the NPRM and present its recommended decision to the Commission no later than August 15, 2002. The Commission will then expeditiously consider the Joint Board's recommendations and issue an order in response to the court's remand.

3. Finally, although the Commission has determined that all carriers will eventually receive universal service support based upon their forward-looking costs, it has allowed rural carriers to continue to calculate support under a modified version of the embedded cost mechanism for five years. The Commission previously stated that it intended to refer the complex issues surrounding rural high-cost support to the Joint Board, ''no later than January 1, 2002'' in order to begin the process of determining what regime should be in place upon the expiration of the Rural Task Force plan. The Commission further stated that, ''in the context of the Joint Board's consideration of an appropriate high-cost mechanism for rural telephone companies, [it anticipates] conducting a comprehensive review of the high-cost support mechanisms for rural and non-rural carriers as a whole to ensure that both mechanisms function efficiently and in a coordinated fashion.''

4. In light of the need to expeditiously address the issues remanded by the court, the Commission now believes it appropriate to delay briefly the initiation of a comprehensive examination of how the rural and non-rural mechanisms function together. The Commission will refer issues concerning the rural high-cost support mechanism and how that mechanism functions with the non-rural mechanism to the Joint Board at a later date.

III. Ordering Clauses

5. Pursuant to sections 1, 4(i) and (j), 254, and 410 of the Communications Act of 1934, as amended, 47 U.S.C. 151, 154(i), 154(j), 254, and 410, that the issues specified in the Order are referred to the Federal-State Joint Board on Universal Service for a recommendation to be received by the Commission no later than August 15, 2002.

List of Subjects in 47 CFR Part 54

Communications common carriers, Telecommunications, Telephone.

Federal Communications Commission.

William F. Caton,

Acting Secretary.

[FR Doc. 02–5675 Filed 3–8–02; 8:45 am]

BILLING CODE 6712–01–P

FEDERAL COMMUNICATIONS COMMISSION

47 CFR Part 73

[DA 02–499, MM Docket No. 01–335, RM–10338]

Digital Television Broadcast Service; Charleston, SC

AGENCY: Federal Communications Commission.

ACTION: Final rule.

SUMMARY: The Commission, at the request of Media General Communications, Inc., licensee of station WCBD–TV, NTSC channel 2, Charleston, South Carolina, substitutes DTV channel 50 for DTV channel 59. *See* 66 FR 66383, December 26, 2001. DTV channel 50 can be allotted to Charleston, South Carolina, in compliance with the principle community coverage requirements of Section 73.625(a) at reference coordinates 32–56–24 N. and 79–41–45 W. with a power of 1000, HAAT of 561 meters and with a DTV service population of 846 thousand.

With this action, this proceeding is terminated.

DATES: Effective April 22, 2002.

FOR FURTHER INFORMATION CONTACT: Pam Blumenthal, Mass Media Bureau, (202) 418–1600.

SUPPLEMENTARY INFORMATION: This is a synopsis of the Commission's Report and Order, MM Docket No. 01–335, adopted March 1, 2002, and released

March 6, 2002. The full text of this document is available for public inspection and copying during regular business hours in the FCC Reference Information Center, Portals II, 445 12th Street, SW, Room CY–A257, Washington, DC. This document may also be purchased from the Commission's duplicating contractor, Qualex International, Portals II, 445 12th Street, SW, CY–B402, Washington, DC, 20554, telephone 202–863–2893, facsimile 202–863–2898, or via e-mail *qualexint@aol.com.*

List of Subjects in 47 CFR Part 73

Television, Digital television broadcasting.

Part 73 of Title 47 of the Code of Federal Regulations is amended as follows:

PART 73—[AMENDED]

1. The authority citation for Part 73 continues to read as follows:

Authority: 47 U.S.C. 154, 303, 334, 336.

§73.622 [Amended]

2. Section 73.622(b), the Table of Digital Television Allotments under South Carolina, is amended by removing DTV channel 59 and adding DTV channel 50 at Charleston.

Federal Communications Commission.

Barbara A. Kreisman,

Chief, Video Services Division, Mass Media Bureau.

[FR Doc. 02–5708 Filed 3–8–02; 8:45 am]

BILLING CODE 6712–01–P

DEPARTMENT OF COMMERCE

National Oceanic and Atmospheric Administration

50 CFR Part 679

[Docket No. 011218304–1304-01; I.D. 030102B]

Fisheries of the Exclusive Economic Zone Off Alaska; Pollock in Statistical Area 630 of the Gulf of Alaska

AGENCY: National Marine Fisheries Service (NMFS), National Oceanic and Atmospheric Administration (NOAA), Commerce.

ACTION: Closure.

SUMMARY: NMFS is prohibiting directed fishing for pollock in Statistical Area 630 in the Gulf of Alaska (GOA). This action is necessary to prevent exceeding the B season allowance of the pollock total allowable catch (TAC) for Statistical Area 630.

DATES: Effective 1200 hrs, Alaska local time (A.l.t.), March 11, 2002 until 1200 hrs, A.l.t., August 25, 2002.

FOR FURTHER INFORMATION CONTACT: Mary Furuness, 907–586–7228.

SUPPLEMENTARY INFORMATION: NMFS manages the groundfish fishery in the GOA exclusive economic zone according to the Fishery Management Plan for Groundfish of the Gulf of Alaska (FMP) prepared by the North Pacific Fishery Management Council under authority of the Magnuson-Stevens Fishery Conservation and Management Act. Regulations governing fishing by U.S. vessels in accordance with the FMP appear at subpart H of 50 CFR part 600 and 50 CFR part 679.

Within any fishing year, underage or overage of a seasonal allowance may be added to or subtracted from subsequent seasonal allowances in a manner to be determined by the Administrator, Alaska Region, NMFS (Regional Administrator), provided that the sum of the revised seasonal allowances does not exceed 30 percent of the annual TAC apportionment for the Central and Western Regulatory Areas in the GOA (§ 679.20 (a)(5)(ii)(C)). For 2002, 30 percent of the annual TAC for the Central and Western Regulatory Areas is 15,187 mt. For 2002, the Regional Administrator has determined that within each area for which a seasonal allowance is established, any overage or underage of harvest at the beginning of the next season(s) shall be subtracted from or added to the following season provided that the resulting sum of seasonal allowances in the Central and Western Regulatory Areas does not exceed 15,187 mt in any single season. The B season allowance of the pollock TAC in Statistical Area 630 is 1,122 metric tons (mt) as established by an emergency rule implementing 2002 harvest specifications and associated management measures for the groundfish fisheries off Alaska (67 FR 956, January 8, 2002). The Regional Administrator hereby increases the B season pollock TAC by 381 mt. This amount is the A season pollock under harvest in Statistical Area 630 and provides for an aggregate B season allowance in the Central and Western Regulatory Areas that does not exceed 15,187 mt. In accordance with § 679.20 (a)(5)(ii)(C), the B season allowance of pollock TAC in Statistical Area 630 is 1,503 mt.

In accordance with § 679.20 (d)(1)(i), the Regional Administrator has determined that the B season allowance of the pollock TAC in Statistical Area 630 will soon be reached. Therefore, the Regional Administrator is establishing a directed fishing allowance of 1,203 mt, and is setting aside the remaining 300 mt as bycatch to support other anticipated groundfish fisheries. In accordance with § 679.20 (d)(1)(iii), the Regional Administrator finds that this directed fishing allowance will soon be reached. Consequently, NMFS is prohibiting directed fishing for pollock in Statistical Area 630.

Maximum retainable bycatch amounts may be found in the regulations at § 679.20(e) and (f).

Classification

This action responds to the best available information recently obtained from the fishery. The Assistant Administrator for Fisheries, NOAA, finds that the need to immediately implement this action to prevent exceeding the amount of the 2002 A season pollock TAC specified for Statistical Area 630 of the GOA constitutes good cause to waive the requirement to provide prior notice and opportunity for public comment pursuant to the authority set forth at 5 U.S.C. 553 (b)(3)(B) and 50 CFR 679.20 (b)(3)(iii)(A), as such procedures would be unnecessary and contrary to the public interest. Similarly, the need to implement these measures in a timely fashion to prevent exceeding the 2002 B season pollock TAC specified for Statistical Area 630 of the GOA constitutes good cause to find that the effective date of this action cannot be delayed for 30 days. Accordingly, under 5 U.S.C. 553(d), a delay in the effective date is hereby waived.

This action is required by § 679.20 and is exempt from review under Executive Order 12866.

Authority: 16 U.S.C. 1801 *et seq.*

Dated: March 5, 2002.

Bruce C. Morehead,

Acting Director, Office of Sustainable Fisheries, National Marine Fisheries Service.

[FR Doc. 02–5770 Filed 3–11–02; 8:45 am]

BILLING CODE 3510–22–S

Rules and Regulations

Federal Register
Vol. 67, No. 47
Monday, March 11, 2002

This section of the FEDERAL REGISTER contains regulatory documents having general applicability and legal effect, most of which are keyed to and codified in the Code of Federal Regulations, which is published under 50 titles pursuant to 44 U.S.C. 1510.

The Code of Federal Regulations is sold by the Superintendent of Documents. Prices of new books are listed in the first FEDERAL REGISTER issue of each week.

DEPARTMENT OF AGRICULTURE

Agricultural Marketing Service

7 CFR Parts 900 and 1200

[AMS–02–001]

Rules of Practice

AGENCY: Agricultural Marketing Service, USDA.

ACTION: Final rule.

SUMMARY: The Agricultural Marketing Service (AMS) of the United States Department of Agriculture (USDA) is amending the Rules of Practice Governing Proceedings on Petitions To Modify or To Be Exempted From Marketing Orders and the Rules of Practice Governing Proceedings on Petitions To Modify or To Be Exempted From Research, Promotion and Education Programs. AMS also is amending the Rules of Practice and Procedure Governing Proceedings To Formulate Marketing Agreements and Marketing Orders and the Rules of Practice and Procedure Governing Proceedings To Formulate and Amend an Order.

This final rule amends the Rules of Practice Governing Proceedings on Petitions To Modify or To Be Exempted From Marketing Orders and the Rules of Practice Governing Proceedings on Petitions To Modify or To Be Exempted From Research, Promotion and Education Programs: To provide that transcripts and exhibits do not have to be kept on file in the Office of the Hearing Clerk during the active status of a proceeding; to provide that transcripts may be obtained at the cost of duplication; to provide that the date of filing an appeal petition is the date the appeal petition is filed with the Hearing Clerk; to eliminate the postmark as an effective date of filing documents or papers; to provide that when the time for filing a document or paper expires on a Saturday, the time allowed for filing the document or paper shall be extended to include the following business day; and to provide that the time for filing a motion to dismiss or an answer is within 30 days after the service of the petition.

This rule also amends the Rules of Practice and Procedure Governing Proceedings To Formulate Marketing Agreements and Marketing Orders and the Rules of Practice and Procedure Governing Proceedings To Formulate and Amend an Order to provide that: Transcripts may be obtained at the cost of duplication; to eliminate the postmark as an effective date of filing documents or papers; to provide that when the time for filing a document or paper expires on a Saturday, the time allowed for filing the document or paper shall be extended to include the following business day.

AMS also is making a number of minor and non-substantive changes for clarity and uniformity of style.

These amendments are necessary in order to expedite proceedings and save the United States and those who participate in the proceedings time and money.

EFFECTIVE DATE: March 11, 2002.

FOR FURTHER INFORMATION CONTACT: Martha Ransom, Chief, Research and Promotion Branch, F&V, AMS, USDA, Stop 0244, 1400 Independence Avenue, SW, Room 2535–S, Washington, DC 20250–0244, telephone (202) 720–9915, fax (202) 205–2800, e-mail *martha.ransom@usda.gov.*

SUPPLEMENTARY INFORMATION:

Background

Availability of Transcripts and Evidence

Section 900.60(f)(1) of the Rules of Practice Governing Proceedings on Petitions To Modify or To Be Exempted From Marketing Orders (7 CFR 900.60(f)(1)) and section 1200.52(d) of the Rules of Practice Governing Proceedings on Petitions To Modify or To Be Exempted From Research, Promotion and Education Programs (7 CFR 1200.52(d)), by cross-reference to section 900.60(f)(1), provide that during the period in which proceedings under the Rules of Practice Governing Proceedings on Petitions To Modify or To Be Exempted From Marketing Orders (7 CFR 900.50 through 900.71) and proceedings under the Rules of Practice Governing Proceedings on Petitions To Modify or To Be Exempted From Research, Promotion and Education Programs (7 CFR 1200.50 through 1200.52) have an active status, the transcripts and exhibits shall be kept on file in the Office of the Hearing Clerk, where they shall be available for examination during official hours of business. Thereafter, the transcripts and exhibits shall be made available by the Hearing Clerk for examination during official hours of business after prior request and reasonable notice to the Hearing Clerk. AMS is removing this provision. During the ''active status'' of these litigation proceedings, it is impracticable to keep the transcripts and exhibits on file in the Office of the Hearing Clerk during official hours of business because they are used by administrative law judges to prepare the initial decisions and by the Judicial Officer to prepare final decisions.

AMS also is amending section 900.60(f)(2) of the Rules of Practice Governing Proceedings on Petitions To Modify or To Be Exempted From Marketing Orders (7 CFR 900.60(f)(2)); section 1200.52(d) of the Rules of Practice Governing Proceedings on Petitions To Modify or To Be Exempted From Research, Promotion and Education Programs (7 CFR 1200.52(d)), by cross-reference to section 900.60(f)(2); section 900.11(b) of the Rules of Practice and Procedure Governing Proceedings To Formulate Marketing Agreements and Marketing Orders (7 CFR 900.11(b)); and section 1200.12(b) of the Rules of Practice and Procedure Governing Proceedings To Formulate and Amend an Order (7 CFR 1200.12(b)). All of these sections provide that if a personal copy of a transcript is desired, the copy may be obtained on written application filed with the reporter and upon payment of any fees. These sections are not consistent with section 11 of the Federal Advisory Committee Act (5 U.S.C. app. at 6 (2000)) which requires that agencies make copies of transcripts of agency proceedings available to any person at actual cost of duplication. Therefore, AMS is amending these sections to provide that transcripts of proceedings shall be made available to any person at actual cost of duplication.

Transmission of Appeal Petitions

Section 900.65(a) of the Rules of Practice Governing Proceedings on Petitions To Modify or To Be Exempted From Marketing Orders (7 CFR 900.65(a)) and section 1200.52(d) of the Rules of Practice Governing Proceedings on Petitions To Modify or To Be Exempted From Research, Promotion and Education Programs (7 CFR 1200.52(d)), by cross-reference to section 900.65(a), provide that an appeal from an administrative law judge's initial decision must be transmitted to the Hearing Clerk within 30 days after service of the initial decision. AMS is amending this provision to require that appeal petitions must be filed with the Hearing Clerk within 30 days after service of the initial decision. This amendment is necessary because, depending upon the method of transmission, the date of transmission may be difficult to discern; whereas documents filed with the Hearing Clerk are stamped with the date and time of filing.

Effective Date of Filing

AMS is amending section 900.69(d) of the Rules of Practice Governing Proceedings on Petitions To Modify or To Be Exempted From Marketing Orders (7 CFR 900.69(d)); section 1200.52(d) of the Rules of Practice Governing Proceedings on Petitions To Modify or To Be Exempted From Research, Promotion and Education Programs (7 CFR 1200.52(d)), by cross-reference to section 900.69(d); section 900.15(c) of the Rules of Practice and Procedure Governing Proceedings To Formulate Marketing Agreements and Marketing Orders (7 CFR 900.15(c)); and section 1200.17(c) of the Rules of Practice and Procedure Governing Proceedings To Formulate and Amend an Order (7 CFR 1200.17(c)). All of these sections provide that any document or paper, except a petition, shall be deemed to have been filed when it is postmarked or received by the Hearing Clerk. AMS is amending this provision to provide that a document or paper will only be deemed to be filed when it is received by the Hearing Clerk. Under the current provision, a document or paper which has a timely postmark is timely-filed even if the document or paper is received by the Hearing Clerk after the time for filing. The use of the postmark to determine timeliness causes uncertainty. The Hearing Clerk must wait for days after a document or paper is required to be filed before notifying the other parties, the administrative law judge, or the Judicial Officer that a document or paper has not been timely-filed. Moreover, at least theoretically, the Hearing Clerk can never be absolutely certain that a document or paper is not timely because the Hearing Clerk may never receive a document or paper with a timely postmark. Therefore, in order to provide certainty and a single method for determining the effective date of filing, we are eliminating the provision under which documents or papers are deemed to be filed when postmarked. Any party who believes that he or she has not been allowed sufficient time for a document or paper to be received by the Hearing Clerk may move for an extension of time for filing the document or paper.

Computation of Time for Filing

AMS is amending section 900.69(e) of the Rules of Practice Governing Proceedings on Petitions To Modify or To Be Exempted From Marketing Orders (7 CFR 900.69(e)); section1200.52(d) of the Rules of Practice Governing Proceedings on Petitions To Modify or To Be Exempted From Research, Promotion and Education Programs (7 CFR 1200.52(d)), by cross-reference to section 900.69(e); section 900.15(d) of the Rules of Practice and Procedure Governing Proceedings To Formulate Marketing Agreements and Marketing Orders (7 CFR 900.15(d)); and section 1200.17(d) of the Rules of Practice and Procedure Governing Proceedings To Formulate and Amend an Order (7 CFR 1200.17(d)). All of these sections provide that Sundays and Federal holidays shall be included in computing time allowed for filing any document or paper, and that when the time for filing expires on a Sunday or Federal holiday, the time for filing shall be extended to include the next following business day. AMS is amending these sections to make it clear that each day, including Saturdays, Sundays, and legal public holidays, is included in computing time allowed for filing any document or paper. Further, because the Hearing Clerk's office is now closed on Saturdays, we are amending these sections to provide that when the time for filing a document or paper expires on a Saturday, the time allowed for filing the document or paper shall be extended to include the following business day.

Time for Filing a Motion To Dismiss or Answer

AMS is amending sections 900.52(c)(1) (7 CFR 900.52(c)(1)) and 900.52a(a) (7 CFR 900.52a(a)) of the Rules of Practice Governing Proceedings on Petitions To Modify or To Be Exempted From Marketing Orders and section 1200.52(c) (7 CFR 1200.52(c)) and section 1200.52(d) (7 CFR 1200.52(d)) of the Rules of Practice Governing Proceedings on Petitions To Modify or To Be Exempted From Research, Promotion and Education Programs, by cross-reference to section 900.52a(a). These sections provide that the Administrator may file a motion to dismiss or an answer within 30 days after the filing of a petition. AMS is amending these provisions to provide that the AMS Administrator may file a motion to dismiss or an answer within 30 days after the service of the petition. Under the current provisions, there is no way to determine with certainty when the petition is received by the Administrator from the Hearing Clerk's office. Theoretically, under the current provisions, the Administrator can receive the petition from the Hearing Clerk's office after the 30-day period to file a motion to dismiss or an answer has elapsed. Therefore, in order to provide certainty and to ensure that the Administrator receives the petition in sufficient time to file a motion to dismiss or an answer, we are amending these provisions to provide that a motion to dismiss or an answer may be filed within 30 days after the service of the petition.

Minor and Non-substantive Changes

AMS also is making a number of minor and non-substantive changes. Specifically, AMS is: (1) Correcting an incorrect cross-reference in 7 CFR 900.51(j); (2) making editorial changes in 7 CFR 900.2(d), 7 CFR 900.51(d), 7 CFR 900.51(o), 7 CFR 900.52(b), 7 CFR 900.52(c)(2), 7 CFR 900.52a(a), 7 CFR 900.62(c), 7 CFR 900.64, 7 CFR 900.68, 7 CFR 900.70(a), 7 CFR 1200.2(e), and 7 CFR 1200.51(e) for clarity, to correct typographical errors, and for uniformity of style; (3) eliminating gender-specific references in 7 CFR 900.2(c), 7 CFR 900.2(e), 7 CFR 900.51(c), 7 CFR 900.51(e), and 7 CFR 900.52(c)(1); (4) eliminating the following provisions which have been reserved, 7 CFR 900.2(f), 7 CFR 900.51(f), 7 CFR 900.51(n), and 7 CFR 900.60(e); and (5) eliminating the definition of the **Federal Register** in 7 CFR 900.51(g) which is not used in the Rules of Practice Governing Proceedings or Petitions To Modify or To Be Exempted From Marketing Orders.

This rule amends provisions of the rules of practice governing the conduct of certain proceedings under Marketing Agreements and Orders, and under Research, Promotion, and Education Programs. Therefore, pursuant to section 553 of the Administrative Procedure Act (APA), 5 U.S.C. 553, it is exempt from the APA's notice and comment

requirements. In addition, this rule is exempt from the requirements of the Regulatory Flexibility Act, 5 U.S.C. 601 *et seq.*

Executive Orders 12866 and 12988

This rule has been determined to be not significant for purposes of Executive Order 12866 and, therefore, has not been reviewed by OMB.

This rule has been reviewed under Executive Order 12988, Civil Justice Reform. This rule is not intended to have retroactive effect. This rule will not preempt any State or local laws, regulations, or policies, unless they present an irreconcilable conflict with this rule. There are no administrative proceedings which must be exhausted before parties may file suit in court challenging this rule.

Paperwork Reduction Act

This rule contains no information collection or recordkeeping requirements under the Paperwork Reduction Act of 1995 (44 U.S.C. 3501 *et seq.*).

List of Subjects

7 CFR Part 900

Administrative practice and procedure, Freedom of information, Marketing agreements, Reporting and recordkeeping requirements.

7 CFR Part 1200

Administrative practice and procedure, Blueberries, Cotton, Dairy, Eggs, Fluid milk, Honey, Marketing agreements, Mushrooms, Peanuts, Popcorn, Pork, Potatoes, Soybeans, Watermelons.

For the reasons stated in the preamble, 7 CFR parts 900 and 1200 are amended as follows:

PART 900—GENERAL REGULATIONS

Subpart—Rules of Practice and Procedure Governing Procedures on Petitions To Formulate Marketing Agreement and Marketing Orders

1. The authority citation for Subpart—Rules of Practice and Procedure Governing Proceedings on Petitions To Formulate Marketing Agreements and Marketing Orders is revised to read as follows:

Authority: 7 U.S.C. 610.

2. Amend § 900.2 as follows:

a. Paragraph (c) is amended by removing the words ''in his stead'' and adding the words ''for the Secretary'' in their place.

b. Paragraph (d) is amended by removing the words ''terms Administrative Law Judge or Judge'' and adding the words ''term *judge*'' in their place.

c. Paragraph (e) is revised to read as set forth below.

d. Paragraph (f) is removed.

§ 900.2 Definitions.

* * * * *

(e) The term *Administrator* means the Administrator of the Agricultural Marketing Service or any officer or employee of the Department to whom authority has been delegated or may hereafter be delegated to act for the Administrator.

* * * * *

3. In § 900.11, paragraph (b) is revised to read as follows:

§ 900.11 Copies of the transcript.

* * * * *

(b) Transcripts of hearings shall be made available to any person at actual cost of duplication.

4. In § 900.15, paragraphs (c) and (d) are revised to read as follows:

§ 900.15 Filing; extensions of time; effective date of filing; and computation of time.

* * * * *

(c) *Effective date of filing.* Any document or paper required or authorized in this subpart to be filed shall be deemed to be filed at the time it is received by the Hearing Clerk.

(d) *Computation of time.* Each day, including Saturdays, Sundays, and legal public holidays, shall be included in computing the time allowed for filing any document or paper: Provided, That when the time for filing a document or paper expires on a Saturday, Sunday, or legal public holiday, the time allowed for filing the document or paper shall be extended to include the following business day.

Subpart—Rules of Practice Governing Procedures on Petitions To Modify or To Be Exempted From Marketing Orders

5. The authority citation for Subpart—Rules of Practice Governing Proceedings on Petitions To Modify or To Be Exempted From Marketing Orders is revised to read as follows:

Authority: 7 U.S.C. 608c.

6. Amend § 900.51 as follows:

a. Paragraph (c) is amended by removing the words ''in his stead'' and adding the words ''for the Secretary'' in their place.

b. Paragraph (d) is amended by removing the words ''terms *administrative law judge* or'' and adding the word ''term'' in their place.

c. Paragraph (e) is revised to read as set forth below.

d. Paragraph (j) is revised to read as set forth below.

e. Paragraph (o) is amended by removing the word ''rules'' and adding the word ''rulings'' in its place.

§ 900.51 Definitions.

* * * * *

(e) The term *Administrator* means the Administrator of the Agricultural Marketing Service or any officer or employee of the Department to whom authority has been delegated or may hereafter be delegated to act for the Administrator.

* * * * *

(j) The term *proceeding* means a proceeding before the Secretary arising under section 8c(15)(A) of the Act.

* * * * *

§ 900.52 [Amended]

7. Amend § 900.52 as follows:

a. Paragraphs (b)(2), (b)(3), and (b)(4) are amended by adding the word ''marketing'' immediately after the words ''provisions of the''.

b. Paragraph (c)(1) is amended by removing the word ''he'' and adding the words ''the Administrator'' in its place; by removing the words ''the filing'' and adding the words ''the service'' in their place; and by removing the word ''his''.

c. In paragraph (c)(2), the paragraph heading is amended by removing the words ''*Administrative Law*'' and adding the word ''*the*'' in their place.

§ 900.52a [Amended]

8. In § 900.52a, paragraph (a) is amended by removing the words ''the filing'' and adding the words ''the service'' in their place, and by removing the words ''administrative law judge'' and adding the word ''Judge'' in their place.

9. Amend § 900.60 as follows:

a. Remove paragraph (e).

b. Redesignate paragraph (f) as paragraph (e) and revise newly designated paragraph (e) to read as follows.

§ 900.60 Oral hearings before judge.

* * * * *

(e) *Transcript.* Transcripts of hearings shall be made available to any person at actual cost of duplication.

§ 900.62 [Amended]

10. In § 900.62, paragraph (c), the second sentence is amended by removing the word ''postoffice'' and adding the words ''post office'' in its place.

§ 900.64 [Amended]

11. Amend § 900.64 as follows:

a. The section heading is amended by removing the words ''Administrative Law''.

b. Paragraph heading (c) is amended by removing the words ''*Administrative Law*''.

§ 900.65 [Amended]

12. In § 900.65, paragraph (a), the first sentence is amended by removing the words ''by transmitting an appeal petition to the hearing clerk'' and adding the words ''by filing an appeal petition with the Hearing Clerk'' in their place.

§ 900.68 [Amended]

13. Amend § 900.68 as follows:

a. In § 900.68, the section heading is amended by removing the word ''Applications'' and adding the word ''Petitions'' in its place.

b. In paragraph (a)(1), the first sentence is amended by removing the words ''An application'' and adding the words ''A petition'' in their place.

14. In § 900.69, paragraphs (d) and (e) are revised to read as follows:

§ 900.69 Filing; service; extensions of time; effective date of filing; and computation of time.

* * * * *

(d) *Effective date of filing.* Any document or paper required or authorized in this subpart to be filed shall be deemed to be filed at the time it is received by the Hearing Clerk.

(e) *Computation of time.* Each day, including Saturdays, Sundays, and legal public holidays, shall be included in computing the time allowed for filing any document or paper: *Provided,* That when the time for filing a document or paper expires on a Saturday, Sunday, or legal public holiday, the time allowed for filing the document or paper shall be extended to include the following business day.

§ 900.70 [Amended]

15. In § 900.70, paragraph (a) is amended by removing the word ''or'' immediately after the word ''Secretary'' and adding the word ''for'' in its place.

* * * * *

PART 1200—RULES OF PRACTICE AND PROCEDURE GOVERNING PROCEEDINGS UNDER RESEARCH, PROMOTION, AND EDUCATION PROGRAMS

16. The authority citation for part 1200 is revised to read as follows:

Authority: 7 U.S.C. 2111, 2620, 2713, 4509, 4609, 4814, 4909, 6106, 6306, 6410, 7418, and 7486.

17. Amend § 1200.2 as follows:

a. Paragraph (a) is amended by removing the following references, ''the Floral Research and Consumer Information Act, Pub. L. 97–98, 97th Cong., approved December 22, 1981, 7 U.S.C. 4301–4319;'' and ''the Wheat and Wheat Foods Research and Nutrition Education Act, Pub. L. 95–113, 95th Cong., approved September 29, 1977, 7 U.S.C. 3401–3417;''.

b. Paragraph (e) is revised to read as set forth below.

§ 1200.2 Definitions.

* * * * *

(e) The term *Administrator* means the Administrator of the Agricultural Marketing Service or any officer or employee of the Department to whom authority has been delegated or may hereafter be delegated to act for the Administrator.

* * * * *

18. In § 1200.12, paragraph (b) is revised to read as follows:

§ 1200.12 Copies of the transcript.

* * * * *

(b) Transcripts of hearings shall be made available to any person at actual cost of duplication.

19. In § 1200.17, paragraphs (c) and (d) are revised as follows:

§ 1200.17 Filing, extension of time, effective date of filing, and computation of time.

* * * * *

(c) *Effective date of filing.* Any document or paper required or authorized in this subpart to be filed shall be deemed to be filed at the time it is received by the Hearing Clerk.

(d) *Computation of time.* Each day, including Saturdays, Sundays, and legal public holidays, shall be included in computing the time allowed for filing any document or paper: *Provided,* That when the time for filing a document or paper expires on a Saturday, Sunday, or legal public holiday, the time allowed for filing the document or paper shall be extended to include the following business day.

20. In § 1200.51, paragraph (e) is revised to read as set forth below.

§ 1200.51 Definitions.

* * * * *

(e) The term *Administrator* means the Administrator of the Agricultural Marketing Service or any officer or employee of the Department to whom authority has been delegated or may hereafter be delegated to act for the Administrator.

* * * * *

§ 1200.52 [Amended]

21. In § 1200.52, paragraph (c) is amended by removing the words ''the filing'' and adding the words ''the service'' in their place.

Dated: March 1, 2002.

A.J. Yates,

Administrator, Agricultural Marketing Service.

[FR Doc. 02–5368 Filed 3–8–02; 8:45 am]

BILLING CODE 3410–02–P

DEPARTMENT OF AGRICULTURE

Rural Utilities Service

7 CFR Part 1703

RIN 0572–AB70

Distance Learning and Telemedicine Loan and Grant Program

AGENCY: Rural Utilities Service, USDA.

ACTION: Notice of confirmation of direct final rule.

SUMMARY: The Rural Utilities Service (RUS) hereby gives notice that no adverse comments were received regarding the direct final rule amending its regulations for the Distance Learning and Telemedicine (DLT) Loan and Grant Program, and confirms the effective date of the direct final rule.

DATES: The direct final rule published in the **Federal Register** on January 23, 2002 (67 FR 3039) is effective March 11, 2002.

FOR FURTHER INFORMATION CONTACT: Marilyn J. Morgan, Chief DLT Branch, Advanced Services Division, Rural Utilities Service, U.S. Department of Agriculture, 1400 Independence Ave., SW., STOP 1550, Washington, DC 20250–1550. Telephone: 202–720–0413; e-mail at *mmorgan@rus.usda.gov*; or, Fax: 202–720–1051.

SUPPLEMENTARY INFORMATION:

Background

RUS is amending 7 CFR part 1703, subparts D, E, F, and G of its regulations for the Distance Learning and Telemedicine (DLT) Loan and Grant Program. The current regulations implement the provisions of the Federal Agriculture Improvement and Reform Act of 1996 (7 U.S.C. 950aaa *et seq.*) to encourage and improve telemedicine services and distance learning services in rural areas. The direct final rule addresses the amendments affecting the grant program. These amendments will

clarify eligibility; change the grant minimum matching contribution; clarify that only loan funds will be used to finance transmission facilities; modify financial information requirements; adjust the leveraging of resources scoring criterion; revise financial information to be submitted; and make other minor changes and corrections.

Confirmation of Effective Date

This is to confirm the effective date of March 11, 2002, for the direct final rule, 7 CFR part 1703, Distance Learning and Telemedicine Loan and Grant Program, published in the **Federal Register** on January 23, 2002.

Dated: March 4, 2002.

Hilda Gay Legg,

Administrator, Rural Utilities Service.

[FR Doc. 02–5733 Filed 3–8–02; 8:45 am]

BILLING CODE 3415–15–P

DEPARTMENT OF TRANSPORTATION

Federal Aviation Administration

14 CFR Part 39

[Docket No. 2001–CE–41–AD; Amendment 39–12672; AD 2002–05–04]

RIN 2120–AA64

Airworthiness Directives; SOCATA—Groupe AEROSPATIALE Models MS 892A–150, MS 892E–150, MS 893A, MS 893E, MS 894A, MS 894E, Rallye 150T, and Rallye 150ST Airplanes

AGENCY: Federal Aviation Administration, DOT.

ACTION: Final rule.

SUMMARY: This amendment supersedes Airworthiness Directive (AD) 77–15–06, which applies to all SOCATA—Groupe AEROSPATIALE (Socata) Models MS 892A–150, MS 892E–150, MS 893A, MS 893E, Rallye 150T, and Rallye 150ST airplanes. AD 77–15–06 currently requires you to repetitively inspect the engine mount assembly for cracks, repair any cracks found, and modify the brackets on airplanes with right angle engine mounts. This AD is the result of the French airworthiness authority's determination that updated service information and additional aircraft should be added to the applicability of AD 77–15–06. This AD retains the inspection and repair requirements of the current AD and adds the information communicated by the French airworthiness authority. The actions specified by this AD are intended to detect and correct cracks in the engine mount assembly. Such a condition could cause the engine mount assembly to fail, which could result in loss of control of the airplane.

DATES: This AD becomes effective on April 22, 2002.

The Director of the Federal Register approved the incorporation by reference of certain publications listed in the regulations as of April 22, 2002.

ADDRESSES: You may get the service information referenced in this AD from SOCATA Groupe AEROSPATIALE, Customer Support, Aerodrome Tarbes-Ossun-Lourdes, BP 930—F65009 Tarbes Cedex, France; telephone: 011 33 5 62 41 73 00; facsimile: 011 33 5 62 41 76 54; or the Product Support Manager, SOCATA—Groupe AEROSPATIALE, North Perry Airport, 7501 Pembroke Road, Pembroke Pines, Florida 33023; telephone: (954) 893–1400; facsimile: (954) 964–4191. You may view this information at the Federal Aviation Administration (FAA), Central Region, Office of the Regional Counsel, Attention: Rules Docket No. 2001–CE–41–AD, 901 Locust, Room 506, Kansas City, Missouri 64106; or at the Office of the Federal Register, 800 North Capitol Street, NW, suite 700, Washington, DC.

FOR FURTHER INFORMATION CONTACT: Karl Schletzbaum, Aerospace Engineer, FAA, Small Airplane Directorate, 901 Locust, Room 301, Kansas City, Missouri 64106; telephone: (816) 329–4146; facsimile: (816) 329–4090.

SUPPLEMENTARY INFORMATION:

Discussion

Has FAA Taken Any Action to This Point?

Fatigue cracks found on the engine mount assemblies of Socata Models MS 892A–150, MS 892E–150, MS 893A, MS 893E, Rallye 150T, and Rallye 150ST airplanes caused us to issue AD 77–15–06, Amendment 39–2975. AD 77–15–06 currently requires the following:

—Inspecting the engine mount assembly for cracks at repetitive intervals;

—Repairing any cracks found; and

—Modifying the brackets on airplanes with right angle engine mounts.

What Has Happened Since AD 77–15–06 To Initiate This Action?

The Direction Générale de l'Aviation Civile (DGAC), which is the airworthiness authority for France, recently notified FAA of the need to change AD 77–15–06. The DGAC reports that:

—The manufacturer has issued new service information to address the unsafe condition;

—Additional airplane models should be added to the applicability; and

—The initial compliance time should be changed from 100 hours time-in-service (TIS) to 50 hours TIS.

What Is the Potential Impact if FAA Took No Action?

This condition, if not detected and corrected, could cause the engine mount assembly to fail. Such failure could result in loss of control of the airplane.

Has FAA Taken Any Action to This Point?

We issued a proposal to amend part 39 of the Federal Aviation Regulations (14 CFR part 39) to include an AD that would apply to all Socata Models MS 892A–150, MS 892E–150, MS 893A, MS 893E, MS 894A, MS 894E, Rallye 150T, and Rallye 150ST airplanes. This proposal was published in the **Federal Register** as a notice of proposed rulemaking (NPRM) on December 17, 2001 (66 FR 64928). The NPRM proposed to supersede AD 77–15–06 with a new AD that would require you to:

—Repetitively inspect any engine mount assembly that is not part number 892–51–0–035–0 (or FAA-approved equivalent part number) for cracks;

—Repair cracks that do not exceed a certain length; and

—Replace the engine mount when the cracks exceed a certain length and cracks are found on an engine mount that already has two repairs.

Was the Public Invited To Comment?

The FAA encouraged interested persons to participate in the making of this amendment. We did not receive any comments on the proposed rule or on our determination of the cost to the public.

FAA's Determination

What Is FAA's Final Determination on This Issue?

After careful review of all available information related to the subject presented above, we have determined that air safety and the public interest require the adoption of the rule as proposed except for minor editorial corrections. We have determined that these minor corrections:

—Provide the intent that was proposed in the NPRM for correcting the unsafe condition; and

—Do not add any additional burden upon the public than was already proposed in the NPRM.

Cost Impact

How Many Airplanes Does This AD Impact?

We estimate that this AD affects 81 airplanes in the U.S. registry.

What Is the Cost Impact of This AD on Owners/Operators of the Affected Airplanes?

We estimate the following costs to accomplish each inspection:

Labor cost	Parts cost	Total cost per airplane	Total cost on U.S. operators
1 workhour × $60 = $60	No parts required	$60	$60 × 81 = $4,860

We estimate the following costs to accomplish any necessary repairs that will be required based on the results of each inspection. We have no way of determining the number of airplanes that may need such repair:

Labor cost	Parts cost	Total cost per airplane
3 workhours × $60 = $180	No parts required	$180

We estimate the following costs to accomplish any necessary replacements that will be required based on the results of each inspection. We have no way of determining the number of airplanes that may need such replacement:

Labor cost	Parts cost	Total cost per airplane
9 workhours × $60 = $540	$3,500	$540 + $3,500 = $4,040

Regulatory Impact

Does This AD Impact Various Entities?

The regulations adopted herein will not have a substantial direct effect on the States, on the relationship between the national government and the States, or on the distribution of power and responsibilities among the various levels of government. Therefore, it is determined that this final rule does not have federalism implications under Executive Order 13132.

Does This AD Involve a Significant Rule or Regulatory Action?

For the reasons discussed above, I certify that this action (1) is not a ''significant regulatory action'' under Executive Order 12866; (2) is not a ''significant rule'' under DOT Regulatory Policies and Procedures (44 FR 11034, February 26, 1979); and (3) will not have a significant economic impact, positive or negative, on a substantial number of small entities under the criteria of the Regulatory Flexibility Act. A copy of the final evaluation prepared for this action is contained in the Rules Docket. A copy of it may be obtained by contacting the Rules Docket at the location provided under the caption **ADDRESSES.**

List of Subjects in 14 CFR Part 39

Air transportation, Aircraft, Aviation safety, Incorporation by reference, Safety.

Adoption of the Amendment

Accordingly, under the authority delegated to me by the Administrator, the Federal Aviation Administration amends part 39 of the Federal Aviation Regulations (14 CFR part 39) as follows:

PART 39—AIRWORTHINESS DIRECTIVES

1. The authority citation for part 39 continues to read as follows:

Authority: 49 U.S.C. 106(g), 40113, 44701.

§ 39.13 [Amended]

2. FAA amends § 39.13 by removing Airworthiness Directive (AD) 77–15–06, Amendment 39–2975, and by adding a new AD to read as follows:

2002–05–04 SOCATA—Groupe AEROSPATIALE: Amendment 39–12672; Docket No. 2001–CE–41–AD; Supersedes AD 77–15–06, Amendment 39–2975.

(a) *What airplanes are affected by this AD?* This AD affects the following airplane models and serial numbers that are certificated in any category and do not have a part number 892–51–0–035–0 engine mount assembly (or FAA-approved equivalent part number) installed:

Model	Serial No.
MS 892A–150	All serial numbers.
MS 892E–150	All serial numbers.
MS 893A	All serial numbers.
MS 893E	All serial numbers.
MS 894A	1005 through 2204 equipped with kit OPT8098 9037.
MS 894E	1005 through 2204 equipped with kit OPT8098 9037.
Rallye 150T	All serial numbers.
Rallye 150ST	All serial numbers.

(b) *Who must comply with this AD?* Anyone who wishes to operate any of the airplanes identified in paragraph (a) of this AD must comply with this AD.

(c) *What problem does this AD address?* The actions specified by this AD are intended to detect and correct cracks in the engine mount assembly. Such a condition could cause the engine mount assembly to fail, which could result in loss of control of the airplane.

(d) *What actions must I accomplish to address this problem?* To address this problem, you must accomplish the following:

Actions	Compliance	Procedures
(1) Inspect the engine mount assembly for cracks.	For airplanes previously affected by AD 77–15–06: inspect within the next 50 hours time-in-service (TIS) after the last inspection required by AD 77–15–06 or within the next 50 hours TIS after April 22, 2002 (the effective date of this AD), whichever occurs first, and thereafter at intervals not to exceed 50 hours TIS. For all other airplanes: inspect within the next 50 hours TIS after April 22, 2002 (the effective date of this AD) and thereafter at intervals not to exceed 50 hours TIS.	In accordance with the Accomplishment Instructions section of Socata Service Bulletin SB 156–71, dated May 2001.
(2) If any crack is found during any inspection required by this AD that is less than 0.24 inches (6 mm) in length, repair the engine mounts assembly. If two repairs on the engine mount have already been performed, replace in accordance with paragraph (d)(3) of this AD.	Prior to further flight after the inspection in which the crack is found.	In accordance with the Accomplishment Instructions section of Socata Service Bulletin SB 156–71, dated May 2001.
(3) If any crack is found during any inspection required by this AD that is 0.24 inches (6 mm) or longer in length or if any crack is found and two repairs on the engine mount have already been performed, replace the engine mount assembly with part number 892–51–0–035–0 (or FAA-approved equivalent part number).	Prior to further flight after the inspection in which the crack is found. Repetitive inspections are no longer required after this replacement.	In accordance with the applicable maintenance manual.
(4) You may terminate the repetitive inspections of this AD after installing engine mount assembly, part number 892–51–0–035–0 (or FAA-approved equivalent part number).	At any time but it must be done prior to further flight if any of the criteria of paragraph (d)(3) are met.	In accordance with the applicable maintenance manual.

(e) *Can I comply with this AD in any other way?*

(1) You may use an alternative method of compliance or adjust the compliance time if:

(i) Your alternative method of compliance provides an equivalent level of safety; and

(ii) The Manager, Small Airplane Directorate, approves your alternative. Submit your request through an FAA Principal Maintenance Inspector, who may add comments and then send it to the Manager, Small Airplane Directorate.

(2) Alternative methods of compliance approved in accordance with AD 77–15–06, which is superseded by this AD, are not approved as alternative methods of compliance with this AD.

Note 1: This AD applies to each airplane identified in paragraph (a) of this AD, regardless of whether it has been modified, altered, or repaired in the area subject to the requirements of this AD. For airplanes that have been modified, altered, or repaired so that the performance of the requirements of this AD is affected, the owner/operator must request approval for an alternative method of compliance in accordance with paragraph (e) of this AD. The request should include an assessment of the effect of the modification, alteration, or repair on the unsafe condition addressed by this AD; and, if you have not eliminated the unsafe condition, specific actions you propose to address it.

(f) *Where can I get information about any already-approved alternative methods of compliance?* Contact Karl Schletzbaum, Aerospace Engineer, FAA, Small Airplane Directorate, 901 Locust, Room 301, Kansas City, Missouri 64106; telephone: (816) 329–4146; facsimile: (816) 329–4090.

(g) *What if I need to fly the airplane to another location to comply with this AD?* The FAA can issue a special flight permit under sections 21.197 and 21.199 of the Federal Aviation Regulations (14 CFR 21.197 and 21.199) to operate your airplane to a location where you can accomplish the requirements of this AD.

(h) *Are any service bulletins incorporated into this AD by reference?* Actions required by this AD must be done in accordance with Socata Service Bulletin SB 156–71, dated May 2001. The Director of the Federal Register approved this incorporation by reference under 5 U.S.C. 552(a) and 1 CFR part 51. You can get copies from SOCATA Groupe AEROSPATIALE, Customer Support, Aerodrome Tarbes-Ossun-Lourdes, BP 930—F65009 Tarbes Cedex, France; or the Product Support Manager, SOCATA Groupe AEROSPATIALE, North Perry Airport, 7501 Pembroke Road, Pembroke Pines, Florida 33023. You can look at copies at the FAA, Central Region, Office of the Regional Counsel, 901 Locust, Room 506, Kansas City, Missouri, or at the Office of the Federal Register, 800 North Capitol Street, NW., suite 700, Washington, DC.

(i) *Does this AD action affect any existing AD actions?* This amendment supersedes AD 77–15–06, Amendment 39–2975.

Note 2: The subject of this AD is addressed in French AD 2001–400(A), dated September 19, 2001.

(j) *When does this amendment become effective?* This amendment becomes effective on April 22, 2002.

Issued in Kansas City, Missouri, on March 1, 2002.

Michael Gallagher,

Manager, Small Airplane Directorate, Aircraft Certification Service.

[FR Doc. 02–5526 Filed 3–8–02; 8:45 am]

BILLING CODE 4910–13–P

DEPARTMENT OF TRANSPORTATION

14 CFR Part 71

[Airspace Docket No. 00–AGL–29]

Modification of Class E Airspace; Hillsboro, ND; Correction

AGENCY: Federal Aviation Administration (FAA), DOT.

ACTION: Final rule; correction.

SUMMARY: This action corrects an error in the heading of a final rule that was published in the **Federal Register** on Friday, January 4, 2002 (67 FR 515), Airspace Docket No. 00–AGL–29. The final rule modified Class E Airspace at Hillsboro, ND.

EFFECTIVE DATE: 0901 UTC, February 21, 2002.

FOR FURTHER INFORMATION CONTACT: Denis C. Burke, Air Traffic Division, Airspace Branch, AGL–520, Federal Aviation Administration, 2300 East Devon Avenue, Des Plaines, IL 60018, telephone: (847) 294–7477.

SUPPLEMENTARY INFORMATION:

History

Federal Register document 02-256, Airspace Docket No. 00–AGL–29, published on January 4, 2002 (67 FR 515), modified Class E Airspace at Hillsboro, ND. An error in the heading for the Class E airspace for Hillsboro, ND, was published. The word proposed should not have been used. This action corrects that error.

Correction to Final Rule

Accordingly, pursuant to the authority delegated to me, the heading for the Class E airspace, Hillsboro, ND, as published in the **Federal Register** January 4, 2002 (67 FR 515), (FR Doc. 02–256), is corrected as follows: On page 515, column 2, in the heading, line 5, remove the word ''Proposed''.

Issued in Des Plaines, Illinois on February 6, 2002.

Nancy B. Shelton,

Manager, Air Traffic Division, Great Lakes Region.

[FR Doc. 02–5118 Filed 3–8–02; 8:45 am]

BILLING CODE 4910–13–M

DEPARTMENT OF TRANSPORTATION

Federal Aviation Administration

14 CFR Part 71

[Airspace Docket No. 00–AGL–28]

Establishment of Class E Airspace; Stanley, ND; Correction

AGENCY: Federal Aviation Administration (FAA), DOT.

ACTION: Final rule; correction.

SUMMARY: This action corrects an error in the preamble under the caption ''The Rule'' of a Final Rule that was published in the **Federal Register** on Friday, January 4, 2002 (67 FR 516), Airspace Docket No. 00–AGL–28. The Final rule established Class E Airspace at Stanley, ND.

EFFECTIVE DATE: 0901 UTC February 21, 2002.

FOR FURTHER INFORMATION CONTACT: Denis C. Burke, Air Traffic Division, Airspace Branch, AGL–520, Federal Aviation Administration, 2300 East Devon Avenue, Des Plaines, Illinois 60018, telephone (847) 294–7568.

SUPPLEMENTARY INFORMATION:

History

Federal Register document 02–257, Airspace docket No. 00–AGL–28, published on January 4, 2002 (67 FR 516), established Class E Airspace at Stanley, ND. The following error was contained in the preamble under the caption ''The Rule'': The city of Kenmare was referred to instead of Stanley. This action corrects this error.

Accordingly, pursuant to the authority delegated to me, the error for the Class E airspace, Stanley, ND, as published in the **Federal Register** January 4, 2002 (67 FR 516), (FR Doc. 02–257), is corrected as follows:

On page 516, column 2, under the caption ''The Rule'', first sentence, correct ''Kenmare'' to read ''Stanley''.

Issued in Des Plaines, Illinois on February 6, 2002.

Nancy B. Shelton,

Manager, Air Traffic Division, Great Lakes Region.

[FR Doc. 02–5117 Filed 3–8–02; 8:45 am]

BILLING CODE 4910–13–M

DEPARTMENT OF TRANSPORTATION

14 CFR Part 71

[Airspace Docket No. 00–AGL–24]

Modification of Class E Airspace; Youngstown-Warren Regional Airport, OH; Correction

AGENCY: Federal Aviation Administration (FAA), DOT.

ACTION: Final rule; correction.

SUMMARY: This action corrects an error in the **SUMMARY** of a Final Rule that was published in the **Federal Register** on Friday, January 4, 2002 (67 FR 517), Airspace Docket No. 00–AGL–24. The Final Rule modified Class E Airspace at Youngstown-Warren Regional Airport, OH.

EFFECTIVE DATE: 0901 UTC, February 21, 2002.

FOR FURTHER INFORMATION CONTACT: Denis C. Burke, Air Traffic Division, Airspace Branch, AGL–520, Federal Aviation Administration, 2300 East Devon Avenue, Des Plaines, IL 60018, telephone: (847) 294–7477.

SUPPLEMENTARY INFORMATION:

History

Federal Register document 02–258, Airspace Docket No. 00–AGL–24, published on January 4, 2002 (67 FR 517), modified class E Airspace at Youngstown-Warren Regional Airport, OH. An error in the **SUMMARY** for the Class E airspace for Youngstown-Warren Regional Airport, OH, was published. This action corrects that error.

Correction to Final Rule

Accordingly, pursuant to the authority delegated to me, the **SUMMARY** for the Class E airspace, Youngstown-Warren Regional Airport, OH, as published in the **Federal Register** January 4, 2002 (67 FR 517), (FR Doc. 02–258), is corrected as follows:

On page 517, column 1, second sentence of the **SUMMARY**, remove the words ''to Runway 26''.

Issued in Des Plaines, Illinois on January 25, 2002.

Nancy B. Shelton,

Manager, Air Traffic Division, Great Lakes Region.

[FR Doc. 02–5116 Filed 3–8–02; 8:45 am]

BILLING CODE 4910–13–M

DEPARTMENT OF TRANSPORTATION

Federal Aviation Administration

14 CFR Part 71

[Airspace Docket No. 01–AAL–1]

Revocation of Class E Airspace; Umiat, AK

AGENCY: Federal Aviation Administration (FAA), DOT.

ACTION: Final rule.

SUMMARY: This action revokes Class E airspace at Umiat, AK. This action is necessary because the Umiat airport no longer meets the requirements for Class E airspace to protect Instrument Flight Rules (IFR) operations at Umiat, AK. This rule results in the removal of controlled airspace at Umiat, AK.

EFFECTIVE DATE: 0901 UTC, June 13, 2002.

FOR FURTHER INFORMATION CONTACT: Derril D. Bergt, AAL–538, Federal Aviation Administration, 222 West 7th Avenue, Box 14, Anchorage, AK 99513–7587; telephone number (907) 271–2796; fax: (907) 271–2850; e-mail: Derril.CTR.Bergt@faa.gov. Internet address: *http://www.alaska.faa.gov/at* or at address *http://162.58.28.41/at.*

SUPPLEMENTARY INFORMATION:

History

On November 7, 2001, a proposal to amend part 71 of the Federal Aviation Regulations (14 CFR part 71) to revoke the Class E airspace at Umiat, AK, was published in the **Federal Register** (66 FR 56257). The Umiat airport does not have a standard instrument approach procedure, it is unattended, and does not meet the requirements to be used as

an IFR alternate. The Colored Federal Airway Amber 4 (A–4) was realigned and Colored Federal Airway Amber 6 (A–6) was revoked on December 3, 1998 (63 FR 53279, 5 Oct 1998, Airspace Docket 98–AAL–6) in conjunction with the removal of the Umiat Nondirectional Radio Beacon (NDB). The Umiat NDB was decommissioned in October 1999 resulting in the loss of the instrument approach procedure. With the subsequent cancellation of the A–Paid weather observer contract, there are now no aviation weather sources at Umiat, AK. Futhermore, the Umiat airport is not included in the National Plan of Integrated Airport Systems. Thus, the Umiat airport does not qualify for Class E airspace. This rule revokes the Class E controlled airspace intended for IFR operations at Umiat, AK.

Interested parties were invited to participate in this rulemaking proceeding by submitting written comments on the proposal to the FAA. No public comments have been received, thus, the rule is adopted as written.

The area will be depicted on aeronautical charts for pilot reference. The coordinates for this airspace docket are based on North American Datum 83. The Class E airspace areas extending upward from 700 feet or more above the surface of the earth are published in paragraph 6005 of FAA Order 7400.9J, *Airspace Designations and Reporting Points,* dated August 31, 2001, and effective September 16, 2001, which is incorporated by reference in 14 CFR 71.1. The Class E airspace designation listed in this document will be revoked and revised subsequently in the Order.

The FAA has determined that this proposed regulation only involves an established body of technical regulations for which frequent and routine amendments are necessary to keep them operationally current. It, therefore—(1) is not a ''significant regulatory action'' under Executive Order 12866; (2) is not a ''significant rule'' under DOT Regulatory Policies and Procedures (44 FR 11034; February 26, 1979); and (3) does not warrant preparation of a regulatory evaluation as the anticipated impact is so minimal. Since this is a routine matter that will only affect air traffic procedures and air navigation, it is certified that this rule, when promulgated, will not have a significant economic impact on a substantial number of small entities under the criteria of the Regulatory Flexibility Act.

List of Subjects in 14 CFR Part 71

Airspace, Incorporation by reference, Navigation (air).

Adoption of the Amendment

In consideration of the foregoing, the Federal Aviation Administration amends 14 CFR part 71 as follows:

PART 71—DESIGNATION OF CLASS A, CLASS B, CLASS C, CLASS D, AND CLASS E AIRSPACE AREAS; AIRWAYS; ROUTES; AND REPORTING POINTS

1. The authority citation for 14 CFR part 71 continues to read as follows:

Authority: 49 U.S.C. 106(g), 40103, 40113, 40120; E.O. 10854, 24 FR 9565, 3 CFR, 1959–1963 Comp., p. 389.

§ 71.1 [Amended]

2. The incorporation by reference in 14 CFR 71.1 of Federal Aviation Administration Order 7400.9J, *Airspace Designations and Reporting Points,* dated August 31, 2001, and effective September 16, 2001, is amended as follows:

* * * * *

Paragraph 6005 Class E airspace extending upward from 700 feet or more above the surface of the earth.

* * * * *

AAL AK E5 Umiat, AK [REVOKED]

* * * * *

Issued in Anchorage, AK, on February 21, 2002.

Stephen P. Creamer,

Assistant Manager, Air Traffic Division, Alaskan Region.

[FR Doc. 02–5114 Filed 3–8–02; 8:45 am]

BILLING CODE 4910–13–U

DEPARTMENT OF TRANSPORTATION

Federal Aviation Administration

14 CFR Part 71

[Airspace Docket No. 01–AGL–21]

Modification of Class E Airspace; Zanesville, OH

AGENCY: Federal Aviation Administration (FAA), DOT.

ACTION: Direct final rule; request for comments.

SUMMARY: This document modifies Class E airspace at Zanesville, OH. A Global Positioning System (GPS) Standard Instrument Approach Procedure (SIAP) 160° helicopter point in space approach, has been developed for Bethesda Hospital, Zanesville, OH. Controlled airspace extending upward from 700 feet above the surface is needed to contain aircraft executing the approach. This action modifies existing controlled airspace for Zanesville, OH, in order to include the point in space approach serving Bethesda Hospital.

EFFECTIVE DATE: Effective 0901 UTC, August 8, 2002. Comments must be received on or before April 22, 2002.

ADDRESSES: Send comments on the rule in triplicate to: Federal Aviation Administration, Office of the Regional Counsel, AGL–7, Rules Docket No. 01–AGL–21, 2300 East Devon Avenue, Des Plaines, Illinois 60018. The official docket may be examined in the Office of the Regional Counsel, Federal Aviation Administration, 2300 East Devon Avenue, Des Plaines, Illinois. An informal docket may also be examined during normal business hours at the Air Traffic Division, Airspace Branch, Federal Aviation Administration, 2300 East Devon Avenue, Des Plaines, Illinois.

FOR FURTHER INFORMATION CONTACT: Denis C. Burke, Airspace Branch, AGL–520, Air Traffic Division, Federal Aviation Administration, 2300 East Devon Avenue, Des Plaines, Illinois 60018, telephone (847) 294–7568.

SUPPLEMENTARY INFORMATION: This amendment to 14 CFR part 71 modifies Class E airspace at Zanesville, Ohio, to accommodate aircraft executing the proposed GPS SIAP 160° helicopter point in space approach for Bethesda Hospital by modifying existing controlled airspace. The area will be depicted on appropriate aeronautical charts. Class E airspace designations are published in Paragraph 6005 of FAA Order 7400.9J, dated August 31, 2002, and effective September 16, 2001, which is incorporated by reference in 14 CFR Sec. 71.1. The Class E airspace designation listed in this document will be published subsequently in the order.

The Direct Final Rule Procedure

The FAA anticipates that this regulation will not result in adverse or negative comment and therefore is issuing it as a direct final rule. A substantial number of previous opportunities provided to the public to comment on substantially identical actions have resulted in negligible adverse comments or objections. Unless a written adverse or negative comment, or a written notice of intent to submit an adverse or negative comment is received within the comment period, the regulation will become effective on the date specified above. After the close of the comment period, the FAA will publish a document in the **Federal Register** indicating that no adverse or negative comments were received and confirming the date on which the final rule will become effective. If the FAA

does receive, within the comment period, an adverse or negative comment, or written notice of intent to submit such a comment, a document will be published in the **Federal Register**. This document may withdraw the direct final rule in whole or in part.

After considering the adverse or negative comment, we may publish another direct final rule or publish a notice of proposed rulemaking with a new comment period.

Comments Invited

Although this action is in the form of a final rule and was not preceded by a notice of proposed rulemaking, comments are invited on this rule. Interested persons are invited to comment on this rule by submitting such written data, views, or arguments, as they may desire. Communications should identify the Rules Docket number and be submitted in triplicate to the address specified under the caption **ADDRESSES**. All communications received on or before the closing date for comments will be considered, and this rule may be amended or withdrawn in light of the comments received. Factual information that supports the commenter's ideas and suggestions is extremely helpful in evaluating the effectiveness of this action and determining whether additional rulemaking action is needed.

Comments are specifically invited on the overall regulatory, economic, environmental, and energy aspects of the rule that might suggest a need to modify the rule. All comments submitted will be available, both before and after the closing date for comments, in the Rules Docket for examination by interested persons. A report that summarizes each FAA-public contact concerned with the substance of this action will be filed in the Rules Docket.

Commenters wishing the FAA to acknowledge receipt of their comments submitted in response to this rule must submit a self-addressed, stamped postcard on which the following statement is made: ''Comments to Docket No. 01–AGL–21.'' The postcard will be date stamped and returned to the commenter.

Agency Findings

The regulations adopted herein will not have substantial direct effects on the States, on the relationship between the national government and the States, or on the distribution of power and responsibilities among the various levels of government. Therefore, it is determined that this final rule will not have federalism implications under Executive Order 13132.

Further, the FAA has determined that this regulation is noncontroversial and unlikely to result in adverse or negative comments and only involves an established body of technical regulations that require frequent and routine amendments to keep them operationally current. Therefore, I certify that this regulation (1) is not a ''significant regulatory action'' under Executive Order 12866; (2) is not a ''significant rele'' under DOT Regulatory Policies and Procedures (44 FR 11034; February 26, 1979); and (3) if promulgated, will not have a significant economic impact, positive or negative, on a substantial number of small entities under the criteria of the Regulatory Flexibility Act. Since this rule involves matters that will only affect air traffic procedures and air navigation, it does not warrant preparation of a Regulatory Flexibility Analysis because the anticipated impact is so minimal.

List of Subjects in 14 CFR Part 71

Airspace, Incorporation by reference, Navigation (air).

Adoption of the Amendment

Accordingly, pursuant to the authority delegated to me, the Federal Aviation Administration amends 14 CFR Part 71 as follows:

PART 71—DESIGNATION OF CLASS A, CLASS B, CLASS C, CLASS D, AND CLASS E AIRSPACE AREAS; AIRWAYS; ROUTES; AND REPORTING POINTS

1. The authority citation for 14 CFR Part 71 continues to read as follows:

Authority: 49 U.S.C. 106(g), 40102, 40113, 40120; E.O. 10854; 24 FR 9565, 3 CFR, 1959–1963 Comp., p. 389.

§ 71.1 [Amended]

2. The incorporation by reference in 14 CFR 71.1 of the Federal Aviation Administration Order 7400.9J, Airspace Designations and Reporting Points, dated August 31, 2001, and effective September 16, 2001, is amended as follows:

* * * * *

Paragraph 6005 Class E airspace areas extending upward from 700 feet or more above the surface of the earth.

* * * * *

AGL OH E5 Zanesville, OH [Revised]

Zanesville, Zanesville Municipal Airport, OH
(Lat. 39°56′40″N., long 81°53′31″W.)
Zanesville VOR/DME
(Lat. 39°56′27″N., long. 81°53′33″W.)
Zanesville, Bethesda Hospital, OH
Point in Space Coordinances
(Lat. 39°59′5″N., long. 82°1′30″W.)

That airspace extending upward from 700 feet above the surface within a 6.5-mile radius of Zanesville Municipal Airport and within 7 miles east and 4.4 miles west of the Zanesville VOR/DME 220° radiul extending from the VOR/DME to 10.5 miles southwest of the VOR/DME, and within 2.4 miles either side of the Zanesville VOR/DME 028° radius extending from the 6.5-mile radius to 7 miles northwest of the VOR/DME, and within a 6-mile radius of the Point in Space serving Bethesda Hospital.

* * * * *

Issued in Des Plaines, Illinois on December 27, 2001.

Nancy B. Shelton,

Manager, Air Traffic Division, Great Lakes Region.

[FR Doc. 02–5633 Filed 3–8–02; 8:45 am]

BILLING CODE 4910–13–M

DEPARTMENT OF TRANSPORTATION

Federal Aviation Administration

14 CFR Part 71

[Airspace Docket No. 01–AGL–19]

Modification of Class E Airspace; Ashland, OH

AGENCY: Federal Aviation Administration (FAA), DOT.

ACTION: Direct final rule; request for comments.

SUMMARY: This document modifies Class E airspace at Ashland, OH A Global Positioning System (GPS) Standard Instrument Approach Procedure (SIAP), 022° helicopter point in space approach, has been developed for Samaritian Regional Health System, Ashland, OH. Controlled airspace extending upward from 700 feet above the surface is needed to contain aircraft executing the approach. This action modifies existing controlled airspace for Ashland, OH, in order to include the point in space approach serving Samaritian Regional Health System.

DATES: 0901 UTC, August 08, 2002. Comments must be received on or before April 22, 2002.

ADDRESSES: Send comments on the rule in triplicate to: Federal Aviation Administration, Office of the Regional Counsel, AGL–7, Rules Docket No. 01–AGL–19, 2300 East Devon Avenue, Des Plaines, Illinois 60018.

The official docket may be examined in the Office of the Regional Counsel, Federal Aviation Administration, 2300 East Devon Avenue, Des Plaines, Illinois. An informal docket may also be examined during normal business hours at the Air Traffic Division, Airspace Branch, Federal Aviation

Administration, 2300 East Devon Avenue, Des Plaines, Illinois.

FOR FURTHER INFORMATION CONTACT: Denis C. Burke, Airspace Branch, AGL–520, Air Traffic Division, Federal Aviation Administration, 2300 East Devon Avenue, Des Plaines, Illinois 60018, telephone (847) 294–7568.

SUPPLEMENTARY INFORMATION: This amendment to 14 CFR part 71 modifies class E airspace at Ashland, Ohio, to accommodate aircraft executing the proposed GPS SIAP 022° helicopter point in space approach for Samaritian Regional Health System by modifying existing controlled airspace. The area will be depicted on appropriate aeronautical charts. Class E airspace designations are published in Paragraph 6005 of FAA Order 7400.9J, dated August 31, 2001, and effective September 16, 2001, which is incorporated by reference in 14 CFR Sec. 71.1. The Class E airspace designation listed in this document will be published subsequently in the order.

The Direct Final Rule Procedure

The FAA anticipates that this regulation will not result in adverse or negative comment and therefore is issuing it as a direct final rule. A substantial number of previous opportunities provided to the public to comment on substantially identical actions have resulted in negligible adverse comments or objections. Unless a written adverse or negative comment, or a written notice of intent to submit an adverse or negative comment is received within the comment period, the regulation will become effective on the date specified above. After the close of the comment period, the FAA will publish a document in the **Federal Register** indicating that no adverse or negative comments were received and confirming the date on which the final rule will become effective. If the FAA does receive, within the comment period, an adverse or negative comment, or written notice of intent to submit such a comment, a document will be published in the **Federal Register**. This document may withdraw the direct final rule in whole or in part.

After considering the adverse or negative comment, we may publish another direct final rule or publish a notice of proposed rulemaking with a new comment period.

Comments Invited

Although this action is in the form of a final rule and was not preceded by a notice of proposed rulemaking, comments are invited on this rule. Interested persons are invited to comment on this rule by submitting such written data, views, or arguments, as they may desire. Communications should identify the Rules Docket number and be submitted in triplicate to the address specified under the caption **ADDRESSES.** All communications received on or before the closing date for comments will be considered, and this rule may be amended or withdrawn in light of the comments received. Factual information that supports the commenter's ideas and suggestions is extremely helpful in evaluating the effectiveness of this action and determining whether additional rulemaking action is needed.

Comments are specifically invited on the overall regulatory, economic, environmental, and energy aspects of the rule that might suggest a need to modify the rule. All comments submitted will be available, both before and after the closing date for comments, in the Rules Docket for examination by interested persons. A report that summarizes each FAA-public contact concerned with the substance of this action will be filed in the Rules Docket.

Commenters wishing the FAA to acknowledge receipt of their comments submitted in response to this rule must submit a self-addressed, stamped postcard on which the following statement is made: ''Comments to Docket No. 01–AGL–19.'' The postcard will be date stamped and returned to the commenter.

Agency Findings

The regulations adopted herein will not have substantial direct effects on the States, on the relationship between the national government and the States, or on the distribution of power and responsibilities among the various levels of government. Therefore, it is determined that this final rule will not have federalism implications under Executive Order 13132.

Further, the FAA has determined that this regulation is noncontroversial and unlikely to result in adverse or negative comments and only involves an established body of technical regulations that require frequent and routine amendments to keep them operationally current. Therefore, I certify that this regulation (1) is not a ''significant regulatory action'' under Executive Order 12866; (2) is not a ''significant rule'' under DOT Regulatory Policies and Procedures (44 FR 11034; February 26, 1979); and (3) if promulgated, will not have a significant economic impact, positive or negative, on a substantial number of small entities under the criteria of the Regulatory Flexibility Act. Since this rule involves routine matters that will only affect air traffic procedures and air navigation, it does not warrant preparation of a Regulatory Flexibility Analysis because the anticipated impact is so minimal.

List of Subjects in 14 CFR Part 71

Airspace, Incorporation by reference, Navigation (air).

Adoption of the Amendment

Accordingly, pursuant to the authority delegated to me, the Federal Aviation Administration amends 14 CFR part 71 as follows:

PART 71—DESIGNATION OF CLASS A, CLASS B, CLASS C, CLASS D, AND CLASS E AIRSPACE AREAS; AIRWAYS; ROUTES; AND REPORTING POINTS

1. The authority citation for 14 CFR part 71 continues to read as follows:

Authority: 49 U.S.C. 106(g), 40103, 40113, 40120; E.O. 10854; 24 FR 9565, 3 CFR, 1959–1963 Comp., p. 389.

§ 71.1 [Amended]

2. The incorporation by reference in 14 CFR 71.1 of the Federal Aviation Administration Order 7400.9J, Airspace Designations and Reporting Points, dated August 31, 2001, and effective September 16, 2001, is amended as follows:

* * * * *

Paragraph 6005 Class E airspace areas extending upward from 700 feet or more above the surface of the earth.

* * * * *

AGL OH E5 Ashland, OH [Revised]

Ashland, Ashland County Airport, OH
(Lat. 40°54′11″ N., long. 82°15′21″ W.)
Ashland, Samaritian Regional Health System, OH
Point in Space Coordinates
(Lat. 40°50′58''N., long. 82°18'52''W.)

That airspace extending upward from 700 feet above the surface within a 6.3-mile radius of the Ashland County Airport and within 2.6 miles either side of the 002° bearing from the Airport extending from the 6.3-mile radius to 10.4 miles north of the airport, and within a 6-mile radius of the Point in Space serving Samaritian Regional Health System, excluding that airspace which lies within the Mansfield, OH, Class E airspace area.

* * * * *

Issued in Des Plaines, Illinois on December 27, 2001.

Nancy B. Shelton,

Manager, Air Traffic Division, Great Lakes Region.

[FR Doc. 02–5632 Filed 3–8–02; 8:45 am]

BILLING CODE 4910–13–M

DEPARTMENT OF TRANSPORTATION

Federal Aviation Administration

14 CFR Part 71

[Airspace Docket No. 01–AGL–15]

Modification of Class E Airspace; Mount Vernon, OH

AGENCY: Federal Aviation Administration (FAA), DOT.

ACTION: Direct final rule; request for comments.

SUMMARY: This document modifies Class E airspace at Mount Vernon, OH. A Global Positioning System (GPS) Standard Instrument Approach Procedure (SIAP) 140° helicopter point in space approach, has been developed for Knox Community Hospital, Mount Vernon, OH. Controlled airspace extending upward from 700 feet above the surface is needed to contain aircraft executing the approach. This action modifies existing controlled airspace for Mount Vernon, OH, in order to include the point in space approach serving Knox Community Hospital.

DATES: Effective 0901 UTC, August 08, 2002. Comments must be received on or before April 22, 2002.

ADDRESSES: Send comments on the rule in triplicate to: Federal Aviation Administration, Office of the Regional Counsel, AGL–7, Rules Docket No. 01–AGL–15, 2300 East Devon Avenue, Des Plaines, Illinois 60018. The official docket may be examined in the Office of the Regional Counsel, Federal Aviation Administration, 2300 East Devon Avenue, Des Plaines, Illinois. An informal docket may also be examined during normal business hours at the Air Traffic Division, Airspace Branch, Federal Aviation Administration, 2300 East Devon Avenue, Des Plaines, Illinois.

FOR FURTHER INFORMATION CONTACT: Denis C. Burke, Airspace Branch, AGL–520, Air Traffic Division, Federal Aviation Administration, 2300 East Devon Avenue, Des Plaines, Illinois 60018, telephone (847) 294–7568.

SUPPLEMENTARY INFORMATION: This amendment to 14 CFR part 71 modifies class E airspace at Mount Vernon, Ohio, to accommodate aircraft executing the proposed GPS SIAP 140° helicopter point in space approach for Knox Community Hospital by modifying existing controlled airspace. The area will be depicted on appropriate aeronautical charts. Class E airspace designations are published in Paragraph 6005 of FAA Order 7400.9J, dated August 31, 2001, and effective September 16, 2001, which is incorporated by reference in 14 CFR Sec. 71.1. The Class E airspace designation listed in this document will be published subsequently in the order.

The Direct Final Rule Procedure

The FAA anticipates that this regulation will not result in adverse or negative comment and therefore is issuing it as a direct final rule. A substantial number of previous opportunities provided to the public to comment on substantially identical actions have resulted in negligible adverse comments or objections. Unless a written adverse or negative comment, or a written notice of intent to submit an adverse or negative comment is received within the comment period, the regulation will become effective on the date specified above. After the close of the comment period, the FAA will publish a document in the **Federal Register** indicating that no adverse or negative comments were received and confirming the date on which the final rule will become effective. If the FAA does receive, within the comment period, an adverse or negative comment, or written notice of intent to submit such a comment, a document will be published in the **Federal Register**. This document may withdraw the direct final rule in whole or in part.

After considering the adverse or negative comment, we may publish another direct final rule or publish a notice of proposed rulemaking with a new comment period.

Comments Invited

Although this action is in the form of a final rule and was not preceded by a notice of proposed rulemaking, comments are invited on this rule. Interested persons are invited to comment on this rule by submitting such written data, views, or arguments, as they may desire. Communications should identify the Rules Docket number and be submitted in triplicate to the address specified under the caption **ADDRESSES**. All communications received on or before the closing date for comments will be considered, and this rule may be amended or withdrawn in light of the comments received. Factual information that supports the commenter's ideas and suggestions is extremely helpful in evaluating the effectiveness of this action and determining whether additional rulemaking action is needed.

Comments are specifically invited on the overall regulatory, economic, environmental, and energy aspects of the rule that might suggest a need to modify the rule. All comments submitted will be available, both before and after the closing date for comments, in the Rules Docket for examination by interested persons. A report that summarizes each FAA-public contact concerned with the substance of this action will be filed in the Rules Docket.

Commenters wishing the FAA to acknowledge receipt of their comments submitted in response to this rule must submit a self-addressed, stamped postcard on which the following statement is made: ''Comments to Docket No. 01–AGL–15.'' The postcard will be date stamped and returned to the commenter.

Agency Findings

The regulations adopted herein will not have substantial direct effects on the States, on the relationship between the national government and the States, or on the distribution of power and responsibilities among the various levels of government. Therefore, it is determined that this final rule will not have federalism implications under Executive Order 13132.

Further, the FAA has determined that this regulation is noncontroversial and unlikely to result in adverse or negative comments and only involve an established body of technical regulations that require frequent and routine amendments to keep them operationally current. Therefore, I certify that this regulation (1) is not a ''significant regulatory action'' under Executive Order 12866; (2) is not a ''significant rule'' under DOT Regulatory Policies and Procedures (44 FR 11034; February 26, 1979); and (3) if promulgated, will not have a significant economic impact, positive or negative, on a substantial number of small entities under the criteria of the Regulatory Flexibility Act. Since this rule involves routine matters that will only affect air traffic procedures and air navigation, it does not warrant preparation of a Regulatory Flexibility Analysis because the anticipated impact is so minimal.

List of Subjects in 14 CFR Part 71

Airspace, Incorporation by reference, Navigation (air).

Adoption of the Amendment

Accordingly, pursuant to the authority delegated to me, the Federal Aviation Administration amends 14 CFR part 71 as follows:

PART 71—DESIGNATION OF CLASS A, CLASS B, CLASS C, CLASS D, AND CLASS E AIRSPACE AREAS; AIRWAYS; ROUTES; AND REPORTING POINTS

1. The authority citation for 14 CFR part 71 continues to read as follows:

Authority: 49 U.S.C. 106(g), 40103, 40113, 40120; E.O. 10854; 24 FR 9565, 3 CFR, 1959–1963 Comp., p. 389.

§ 71.1 [Amended]

2. The incorporation by reference in 14 CFR 71.1 of the Federal Aviation Administration Order 7400.9J, Airspace Designations and Reporting Points, dated August 31, 2001, and effective September 16, 2001, is amended as follows:

* * * * *

Paragraph 6005 Class E airspace areas extending upward from 700 feet or more above the surface of the earth.

* * * * *

AGL OH E5 Mount Vernon, OH [Revised]

Mount Vernon, Knox Community Airport, OH
(Lat. 40°19′43′ N., long. 82°31′26″ W.)
Appleton, OH, VORTAC
(Lat. 40°9′4″ N., long. 82°35′18″ W.)
Mount Vernon, Knox Community Hospital, OH
Point in Space Coordinates
(Lat. 40°24′8″ N., long. 82°27′52″ W.)
That airspace extending upward from 700 feet above the surface within a 6.4-mile radius of Knox County Airport and within 3 miles either side of the Appleton VORTAC 015° radial from the 6.4-mile radius to the Appleton VORTAC, and within a 6-mile radius of the Point in Space serving Knox Community Hospital, excluding that airspace within the Newark, OH, Class E airspace area.

* * * * *

Issued in Des Plaines, Illinois on December 27, 2001.

Nancy B. Shelton,

Manager, Air Traffic Division, Great Lakes Region.

[FR Doc. 02–5630 Filed 3–8–02; 8:45 am]

BILLING CODE 4910–13–M

DEPARTMENT OF TRANSPORTATION

Federal Aviation Administration

14 CFR Part 71

[Airspace Docket No. 01–AGL–16]

Modification of Class E Airspace; Portsmouth, OH

AGENCY: Federal Aviation Administration (FAA), DOT.

ACTION: Direct final rule; request for comments.

SUMMARY: This document modifies Class E airspace at Portsmouth, OH. A Global Positioning System (GPS) Standard Instrument Approach procedure (SIAP) 165° helicopter point in space approach, has been developed for Southern Ohio Medical Center, Portsmouth, OH. Controlled airspace extending upward from 700 feet above the surface is needed to contain aircraft executing the approach. This action modifies existing controlled airspace for Portsmouth, OH, in order to include the point in space approach serving Southern Ohio Medical Center Heliport.

DATES: Effective 0901 UTC, August 08, 2002. Comments must be received on or before April 22, 2002.

ADDRESSES: Send comments on the rule in triplicate to: Federal Aviation Administration, Office of the Regional Counsel, AGL–7, Rules Docket No. 01–AGL–16, 2300 East Devon Avenue, Des Plaines, Illinois 60018. The official docket may be examined in the Office of the Regional Counsel, Federal Aviation Administration, 2300 East Devon Avenue, Des Plaines, Illinois. An informal docket may also be examined during normal business hours at the Air Traffic Division, Airspace Branch, Federal Aviation Administration, 2300 East Devon Avenue, Des Plaines, Illinois.

FOR FURTHER INFORMATION CONTACT: Denis C. Burke, Airspace Branch, AGL–520, Air Traffic Division, Federal Aviation Administration, 2300 East Devon Avenue, Des Plaines, Illinois 60018, telephone (847) 294–7568.

SUPPLEMENTARY INFORMATION: This amendment to 14 CFR part 71 modifies class E airspace at Portsmouth, Ohio, to accommodate aircraft executing the proposed GPS SIAP 165° helicopter point in space approach for Southern Ohio Medical Center Heliport by modifying existing controlled airspace. The area will be depicted on appropriate aeronautical charts. Class E airspace designations are published in Paragraph 6005 of FAA Order 7400.9J, dated August 31, 2001, and effective September 16, 2001, which is incorporated by reference in 14 CFR Sec. 71.1. The Class E airspace designation listed in this document will be published subsequently in the order.

The Direct Final Rule Procedure

The FAA anticipates that this regulation will not result in adverse or negative comment and therefore is issuing it as a direct final rule. A substantial number of previous opportunities provided to the public to comment on substantially identical actions have resulted in negligible adverse comments or objections. Unless a written adverse or negative comment, or a written notice of intent to submit an adverse or negative comment is received within the comment period, the regulation will become effective on the date specified above. After the close of the comment period, the FAA will publish a document document in the **Federal Register** indicating that no adverse or negative comments were received and confirming the date on which the final rule will become effective. If the FAA does receive, within the comment period, an adverse or negative comment, or written notice of intent to submit such a comment, a document will be published in the **Federal Register**. This document may withdraw the direct final rule in whole or in part. After considering the adverse or negative comment, we may publish another direct final rule or publish a notice of proposed rulemaking with a new comment period.

Comments Invited

Although this action is in the form of a final rule and was not preceded by a notice of proposed rulemaking, comments are invited on this rule. Interested persons are invited to comment on this rule by submitting such written data, views, or arguments, as they may desire. Communications should identify the Rules Docket number and be submitted in triplicate to the address specified under the caption **ADDRESSES.** All communications received on or before the closing date for comments will be considered, and this rule may be amended or withdrawn in light of the comments received. Factual information that supports the commenter's ideas and suggestions is extremely helpful in evaluating the effectiveness of this action and determining whether additional rulemaking action is needed.

Comments are specifically invited on the overall regulatory, economic, environmental, and energy aspects of the rule that might suggest a need to modify the rule. All comments submitted will be available, both before and after the closing date for comments, in the Rules Docket for examination by interested persons. A report that summarizes each FAA-public contact concerned with the substance of this action will be filed in the Rules Docket.

Commenters wishing the FAA to acknowledge receipt of their comments submitted in response to this rule must submit a self-addressed, stamped postcard on which the following statement is made: ''Comments to Docket No. 01–AGL–16.'' The postcard

will be date stamped and returned to the commenter.

Agency Findings

The regulations adopted herein will not have substantial direct effects on the States, on the relationship between the national government and the States, or on the distribution of power and responsibilities among the various levels of government. Therefore, it is determined that this final rule will not have federalism implications under Executive Order 13132.

Further, the FAA has determined that this regulation is noncontroversial and unlikely to result in adverse or negative comments and only involves an established body of technical regulations that require frequent and routine amendments to keep them operationally current. Therefore, I certify that this regulation (1) is not a ''significant regulatory action'' under Executive Order 12866; (2) is not a ''significant rule'' under DOT Regulatory Policies and Procedures (44 FR 11034; February 26, 1979); and (3) if promulgated, will not have a significant economic impact, positive or negative, on a substantial number of small entities under the criteria of the Regulatory Flexibility Act. Since this rule involves routine matters that will only affect air traffic procedures and air navigation, it does not warrant preparation of a Regulatory Flexibility Analysis because the anticipated impact is so minimal.

List of Subjects in 14 CFR Part 71

Airspace, Incorporation by reference, Navigation (air).

Adoption of the Amendment

Accordingly, pursuant to the authority delegated to me, the Federal Aviation Administration amends 14 CFR part 71 as follows:

PART 71—DESIGNATION OF CLASS A, CLASS B, CLASS C, CLASS D, AND CLASS E AIRSPACE AREAS; AIRWAYS; ROUTES; AND REPORTING POINTS

1. The authority citation for 14 CFR part 71 continues to read as follows:

Authority: 49 U.S.C. 106(g), 40103, 40113, 40120; E.O. 10854; 24 FR 9565, 3 CFR, 1959–1963 Comp., p. 389.

§ 71.7 [Amended]

2. The incorporation by reference in 14 CFR 71.1 of the Federal Aviation Administration Order 7400.9J, Airspace Designations and Reporting Points, dated August 31, 2001, and effective September 16, 2001, is amended as follows:

* * * * *

Paragraph 6005 Class E airspace areas extending upward from 700 feet or more above the surface of the earth.

* * * * *

AGL OH E5 Portsmouth, OH [Revised]

Portsmouth, Greater Portsmouth Regional Airport, OH
(Lat. 38°50′25″ N., long. 82°50′51″ W.)
Portsmouth NDB
(Lat. 38°46′54″ N., long. 82°50′42″ W.)
Portsmouth, Southern Ohio Medical Center, OH
Point in Space Coordinates
(Lat. 38°45′5″ N., long. 83°00′19″ W.)

That airspace extending upward from 700 feet above the surface within a 6.4-mile radius of the Greater Portsmouth Regional Airport and within 2.7 miles each side of the 178° bearing from the Portsmouth NDB extending from the 6.4-mile radius to 10.4 miles south of the airport, and within a 6.0-mile radius of the Point in Space serving Southern Ohio Medical Center.

* * * * *

Issued in Des Plaines, Illinois on December 27, 2001.

Nancy B. Shelton,

Manager, Air Traffic Division, Great Lakes Region.

[FR Doc. 02–5629 Filed 3–8–02; 8:45 am]

BILLING CODE 4910–13–M

DEPARTMENT OF TRANSPORTATION

Federal Aviation Administration

14 CFR Part 71

[Airspace Docket No. 01–AGL–20]

Modification of Class E Airspace; Washington Court House, OH

AGENCY: Federal Aviation Administration (FAA), DOT.

ACTION: Direct final rule; request for comments.

SUMMARY: This document modifies Class E airspace at Washington Court House, OH. A Global Positioning System (GPS) Standard Instrument Approach Procedure (SIAP) 305° helicopter point in space approach, has been developed for Fayette County Memorial Hospital, Washington Court House, OH. Controlled airspace extending upward from 700 feet above the surface is needed to contain aircraft executing the approach. This action modifies existing controlled airspace for Washington Court House, OH, in order to include the point in space approach serving Fayette County Memorial Hospital.

DATES: Effective 0901 UTC, August 08, 2002. Comments must be received on or before April 22, 2002.

ADDRESSES: Send comments on the rule in triplicate to: Federal Aviation Administration, Office of the Regional Counsel, AGL–7 Rules Docket No. 01–AGL–20, 2300 East Devon Avenue, Des Plaines, Illinois 60018. The official docket may be examined in the Office of the Regional Counsel, Federal Aviation Administration, 2300 East Devon Avenue, Des Plaines, Illinois. An informal docket may also be examined during normal business hours at the Air Traffic Division, Airspace Branch, Federal Aviation Administration, 2300 East Devon Avenue, Des Plaines, Illinois.

FOR FURTHER INFORMATION CONTACT: Denis C. Burke, Airspace Branch, AGL–520, Air Traffic Division, Federal Aviation Administration, 2300 East Devon Avenue, Des Plaines, Illinois 60018, telephone (847) 294–7568.

SUPPLEMENTARY INFORMATION: This amendment to 14 CFR part 71 modifies Class E airspace at Washington Court House, Ohio, to accommodate aircraft executing the proposed GPS SIAP 305° helicopter point in space approach for Fayette County Memorial Hospital by modifying existing controlled airspace. The area will be depicted on appropriate aeronautical charts. Class E airspace designations are published in Paragraph 6005 of FAA Order 7400.9J, dated August 31, 2001, and effective September 16, 2001, which is incorporated by reference in 14 CFR Sec. 71.1. The Class E airspace designation listed in this document will be published subsequently in the order.

The Direct Final Rule Procedure

The FAA anticipates that this regulation will not result in adverse or negative comment and therefore is issuing it as a direct final rule. A substantial number of previous opportunities provided to the public to comment on substantially identical actions have resulted in negligible adverse comments or objections. Unless a written adverse or negative comment, or a written notice of intent to submit an adverse or negative comment is received within the comment period, the regulation will become effective on the date specified above. After the close of the comment period, the FAA will publish a document in the **Federal Register** indicating that no adverse or negative comments were received and confirming the date on which the final rule will become effective. If the FAA does receive, within the comment period, an adverse or negative comment,

or written notice of intent to submit such a comment, a document will be published in the **Federal Register**. This document may withdraw the direct final rule in whole or in part.

After considering the adverse or negative comment, we may publish another direct final rule or publish a notice of proposed rulemaking with a new comment period.

Comments Invited

Although this action is in the form of a final rule and was not preceded by a notice of proposed rulemaking, comments are invited on this rule. Interested persons are invited to comment on this rule by submitting such written data, views, or arguments, as they may desire. Communications should identify the Rules docket number and be submitted in triplicate to the address specified under the caption **ADDRESSES**. All communications received on or before the closing date for comments will be considered, and this rule may be amended or withdrawn in light of the comments received. Factual information that supports the commenter's ideas and suggestions is extremely helpful in evaluating the effectiveness of this action and determining whether additional rulemaking action is needed.

Comments are specifically invited on the overall regulatory, economic, environmental, and energy aspects of the rule that might suggest a need to modify the rule. All comments submitted will be available, both before and after the closing date for comments, in the Rules Docket for examination by interested persons. A report that summarizes each FAA-public contact concerned with the substance of this action will be filed in the Rules Docket.

Commenters wishing the FAA to acknowledge receipt of their comments submitted in response to this rule must submit a self-addressed, stamped postcard on which the following statement is made: ''Comments to Docket No. 01–AGL–20.'' The postcard will be date stamped and returned to the commenter.

Agency Findings

The regulations adopted herein will not have substantial direct effects on the States, on the relationship between the national government and the States, or on the distribution of power and responsibilities among the various levels of government. Therefore, it is determined that this final rule will not have federalism implications under Executive Order 13132.

Further, the FAA has determined that this regulation is noncontroversial and unlikely to result in adverse or negative comments and only involves an established body of technical regulations that require frequent and routine amendments to keep them operationally current. Therefore, I certify that this regulation (1) is not a ''significant regulatory action'' under Executive Order 12866; (2) is not a ''significant rule'' under DOT Regulatory Policies and Procedures (44 FR 11034; February 26, 1979); and (3) if promulgated, will not have a significant economic impact, positive or negative, on a substantial number of small entities under the criteria of the Regulatory Flexibility Act. Since this rule involves routine matters that will only affect air traffic procedures and air navigation, it does not warrant preparation of a Regulatory Flexibility Analysis because the anticipated impact is so minimal.

List of Subjects in 14 CFR Part 71

Airspace, Incorporation by reference, Navigation (air).

Adoption of the Amendment

Accordingly, pursuant to the authority delegated to me, the Federal Aviation Administration amends 14 CFR Part 71 as follows:

PART 71—DESIGNATION OF CLASS A, CLASS B, CLASS C, CLASS D, AND CLASS E AIRSPACE AREAS; AIRWAYS ROUTES; AND REPORTING POINTS

1. The authority citation for 14 CFR Part 71 continues to read as follows:

Authority: 49 U.S.C. 106(g), 40103, 40113, 40120; E.O. 10854; 24 FR 9565, 3 CFR 1959–1963 Comp., p. 389.

§ 71.1 [Amended]

2. The incorporation by reference in 14 CFR 71.1 of the Federal Aviation Administration Order 7400.9J, Airspace Designations and Reporting Points, dated August 31, 2001, and effective September 16, 2001, is amended as follows:

* * * * *

Paragraph 6005 Class E airspace areas extending upward from 700 feet or more above the surface of the earth.

* * * * *

AGL OH E5 Washington Court House, OH [Revised]

Washington Court House, Fayette County Airport, OH
(Lat. 39°34′13″ N., long. 83°25′14″ W.)
Court House NDB
(Lat. 39°35′58″ N., long. 83°23′32″ W.)
Washington County Court House, Fayette County Memorial Hospital, OH
Point in Space Coordinates
(Lat. 39°32′18″ N., long. 82°25′15″ W.)

That airspace extending upward from 700 feet above the surface within a 6.5-mile radious of the Fayette County Airport and within 6.4 miles either side of the 037° bearing from the Court House NDB, extending from the 6.5-mile radius to 7 miles northeast of the NDB, and within 2.2 miles either side of the 037° bearing from the Court House NDB, extending from the 6.5-mile radius to 10 miles northeast of the NDB and within a 6 mile radius of the Point in Space serving Fayette County Memorial Hospital.

* * * * *

Issued in Des Plaines, Illinois on December 27, 2001.

Nancy B. Shelton,

Manager, Air Traffic Division, Great Lakes Region.

[FR Doc. 02–5628 Filed 3–8–02; 8:45 am]

BILLING CODE 4910–13–M

DEPARTMENT OF TRANSPORTATION

Federal Aviation Administration

14 CFR Part 71

[Airspace Docket No. 01–AGL–18]

Establishment of Class E Airspace; Flint, MI

AGENCY: Federal Aviation Administration (FAA), DOT.

ACTION: Direct final rule; request for comments.

SUMMARY: This document establishes Class E airports at Flint, Bishop International Airport, MI. Bishop International Airport is served by Federal Aviation Regulations Part 135 (14 CFR 135) air taxi operations, and Federal Aviation Regulations Part 121 (14 CFR 121) air carrier operations. Controlled airspace extending upward from the surface is needed to contain aircraft executing instrument flight procedures and provide a safer operating environment when the control tower is closed. The airport meets the minimum communications and weather observation and reporting requirements for controlled airspace extending upward from the surface. This action creates controlled airspace with a 4.4-mile radius for this airport.

DATES: Effective 0901 UTC, August 8, 2002. Comments must be received on or before April 22, 2002.

ADDRESSES: Send comments on the rule in triplicate to: Federal Aviation Administration, Office of the Regional Counsel, AGL–7, Rules Docket No. 01–AGL–18, 2300 East Devon Avenue, Des Plaines, Illinois 60018. The official docket may be examined in the Office of the Regional Counsel, Federal Aviation Administration, 2300 East

Devon Avenue, Des Plaines, Illinois. An informal docket may also be examined during normal business hours at the Air Traffic Division, Airspace Branch, Federal Aviation Administration, 2300 East Devon Avenue, Des Plaines, Illinois.

FOR FURTHER INFORMATION CONTACT: Denis C. Burke, Airspace Branch, AGL–520, Air Traffic Division, Federal Aviation Administration, 2300 East Devon Avenue, Des Plaines, Illinois 60018, telephone (847) 294–7568.

SUPPLEMENTARY INFORMATION: This amendment to 14 CFR part 71 establishes Class E airspace at Flint, Bishop International Airport, MI, to accommodate part 135 air taxi aircraft, and part 121 air carrier aircraft instrument flight rules procedures during periods when the control tower is closed. The area will be depicted on appropriate aeronautical charts. Class E airspace designations for airspace areas extending upward from the surface of the earth are published in Paragraph 6002 of FAA Order 7400.9J, dated August 31, 2001, and effective September 16, 2001, which is incorporated by reference in 14 CFR Sec. 71.1. The Class E airspace designation listed in this document will be published subsequently in the order.

The Direct Final Rule Procedure

The FAA anticipates that this regulation will not result in adverse or negative comment and therefore is issuing it as a direct final rule. A substantial number of previous opportunities provided to the public to comment on substantially identical actions have resulted in negligible adverse comments or objections. Unless a written adverse or negative comment, or a written notice of intent to submit an adverse or negative comment is received within the comment period, the regulation will become effective on the date specified above. After the close of the comment period, the FAA will publish a document in the Federal Register indicating that no adverse or negative comments were received and confirming the date on which the final rule will become effective. If the FAA does receive, within the comment period, an adverse or negative comment, or written notice of intent to submit such a comment, a document will be published in the **Federal Register**. This document may withdraw the direct final rule in whole or in part. After considering the adverse or negative comment, we may publish another direct final rule or publish a notice of proposed rulemaking with a new comment period.

Comments Invited

Although this action is in the form of a final rule and was not preceded by a notice of proposed rulemaking, comments are invited on this rule. Interested persons are invited to comment on this rule by submitting such written data, views, or arguments, as they may desire. Communications should identify the Rules Docket number and be submitted in triplicate to the address specified under the caption **ADDRESSES**. All communications received on or before the closing date for comments will be considered, and this rule may be amended or withdrawn in light of the comments received. Factual information that supports the commenter's ideas and suggestions is extremely helpful in evaluating the effectiveness of this action and determining whether additional rulemaking action is needed.

Comments are specifically invited on the overall regulatory, economic, environmental, and energy aspects of the rule that might suggest a need to modify the rule. All comments submitted will be available, both before and after the closing date for comments, in the Rules Docket for examination by interested persons. A report that summarizes each FAA-public contact concerned with the substance of this action will be filed in the Rules Docket.

Commenters wishing the FAA to acknowledge receipt of their comments submitted in response to this rule must submit a self-addressed, stamped postcard on which the following statement is made: ''Comments to Docket No. 01–AGL–18.'' The postcard will be date stamped and returned to the commenter.

Agency Findings

The regulations adopted herein will not have substantial direct effects on the States, on the relationship between the national government and the States, or on the distribution of power and responsibilities among the various levels of government. Therefore, it is determined that this final rule will not have federalism implications under Executive Order 13132.

Further, the FAA has determined that this regulation is noncontroversial and unlikely to result in adverse or negative comments and only involves an established body of technical regulations that require frequent and routine amendments to keep them operationally current. Therefore, I certify that this regulation (1) is not a ''significant regulatory action'' under Executive Order 12866; (2) is not a ''significant rule'' under DOT Regulatory Policies and Procedures (44 FR 11034; February 26, 1979); and (3) if promulgated, will not have a significant economic impact; positive or negative, on a substantial number of small entities under the criteria of the Regulatory Flexibility Act. Since this rule involves routine matters that will only affect air traffic procedures and air navigation, it does not warrant preparation of a Regulatory Flexibility Analysis because the anticipated impact is so minimal.

List of Subjects in 14 CFR Part 71

Airspace, Incorporation by reference, Navigation (air).

Adoption of the Amendment

Accordingly, pursuant to the authority delegated to me, the Federal Aviation Administration amends 14 CFR part 71 as follows:

PART 71—DESIGNATION OF CLASS A, CLASS B, CLASS C, CLASS D, AND CLASS E AIRSPACE AREAS; AIRWAYS; ROUTES; AND REPORTING POINTS

1. The authority citation for 14 CFR part 71 continues to read as follows:

Authority: 49 U.S.C. 106(g), 40103, 40113, 40120; E.O. 10854; 24 FR 9565, 3 CFR, 1959–1963 Comp., p. 389.

§ 71.1 [Amended]

2. The incorporation by reference in 14 CFR 71.1 of the Federal Aviation Administration Order 7400.9J, Airspace Designations and Reporting Points, dated August 31, 2001, and effective September 16, 2001, is amended as follows:

* * * * *

Paragraph 6002 Class E airspace areas designated as a surface area.

* * * * *

AGL MI E2 Flint, MI [New]

Flint, Bishop International Airport, MI
(Lat. 42°57′56″ N., long. 83°44′37″ W.)

That airspace extending upward from the surface within a 4.4-mile radius of the Flint, Bishop International Airport.

This Class E airspace area is effective during the specific dates and times established in advance by Notice to airmen. The effective date and time will thereafter be continuously published in the Airport/Facility Directory.

* * * * *

Issued in Des Plaines, Illinois on December 27, 2001.

Nancy B. Shelton,

Manager, Air Traffic Division, Great Lakes Region.

[FR Doc. 02–5627 Filed 3–8–02; 8:45 am]

BILLING CODE 4910–13–M

DEPARTMENT OF TRANSPORTATION

Federal Aviation Administration

14 CFR Part 71

[Airspace Docket No. 01–AWP–30]

Modification of Class E Airspace; Twentynine Palms, CA

AGENCY: Federal Aviation Administration (FAA), DOT.

ACTION: Final Rule.

SUMMARY: This action modifies the Class E airspace area at Twentynine Palms, CA. The establishment of an Area Navigation (RNAV) Global Positing System (GPS) Standard Instrument Approach Procedure (SIAP) RNAV (GPS) Runway (RWY) 26 SIAP to Twentynine Palms Airport, Twentynine Palms, CA has made action necessary. Additional controlled airspace extending upward from 700 feet or more above the surface of the earth is needed to contain aircraft executing the RNAV (GPS) RWY 26 SIAP to Twentynine Palms Airport. The intended effect of this action is to provide adequate controlled airspace for Instrument Flight Rules operations at Twentynine Palms Airport, Twentynine Palms, CA.

EFFECTIVE DATE: 0901 UTC April 18, 2002.

FOR FURTHER INFORMATION CONTACT: Jeri Carson, Airspace Specialist, Airspace Branch, AWP–520, Air Traffic Division, Western-Pacific Region, Federal Aviation Administration, 15000 Aviation Boulevard, Lawndale, California 90261, telephone (310) 725–6611.

SUPPLEMENTARY INFORMATION:

History

On January 22, 2002, the FAA proposed to amend 14 CFR part 71 by modifying the Class E airspace area at Twentynine Palms, CA (67 FR 2836). Additional controlled airspace extending upward from 700 feet or more above the surface is needed to contain aircraft executing the RNAV (GPS) RWY 26 SIAP to Twentynine Palms Airport. This action will provide adequate controlled airspace for aircraft executing the RNAV (GPS) RWY 26 SIAP to Twentynine Palms Airport, Twentynine Palms, CA.

Interested parties were invited to participate in this rulemaking, proceeding by submitting written comments on the proposal to the FAA. No comments to the proposal were received. Class E airspace designations for airspace extending from 700 feet or more above the surface of the earth are published in paragraph 6005 of FAA Order 7400.9J, dated August 31, 2001, and effective September 16, 2001, which is incorporated by reference in 14 CFR 71.1. The Class E airspace designation listed in this document will be published subsequently in the Order.

The Rule

This amendment to 14 CFR part 71 modifies the Class E airspace area at Twentynine Palms, CA. The establishment of a RNAV (GPS) RWY 26 SIAP to Twentynine Palms Airport has made this action necessary. The effect of this action will provide adequate airspace for aircraft executing the RNAV (GPS) RWY 26 SIAP to Twentynine Palms Airport, Twentynine Palms, CA.

The FAA has determined that this regulation only involves an established body of technical regulations for which frequent and routine amendments are necessary to keep them operationally current. Therefore, this regulation—(1) is not a ''significant regulatory action'' under Executive Order 12866; (2) is not a ''significant rule'' under DOT Regulatory Policies and Procedures (44 FR 11034; February 26, 1979); and (3) does not warrant preparation of a Regulatory Evaluation as the anticipated impact is so minimal. Since this is a routine matter that will only affect air traffic procedures and air navigation, it is certified that this rule will not have a significant economic impact on a substantial number of small entities under the criteria of the Regulatory Flexibility Act.

List of Subjects in 14 CFR Part 71

Airspace, Incorporation by reference, Navigation (air).

Adoption of the Amendment

In consideration of the foregoing, the Federal Aviation Administration amends 14 CFR part 71 as follows:

PART 71—DESIGNATION OF CLASS A, CLASS B, CLASS C, CLASS D, AND CLASS E AIRSPACE AREAS; ROUTES; AND REPORTING POINTS.

1. The authority citation for 14 CFR part 71 continues to read as follows:

Authority: 49 U.S.C. 106(g), 40103, 40113, 40120; E.O. 10854, 24 FR 9565, 3 CFR, 1959–1963 Comp., p. 389; 14 CFR 11.69.

§ 71.1 [Amended]

2. The incorporation by reference in 14 CFR 71.1 of the Federal Aviation Administration Order 7400.9J, Airspace Designations and Reporting Points, dated August 31, 2001, and effective September 16, 2001, is amended as follows:

Paragraph 6005 Class E airspace areas extending upward from 700 feet or more above the surface of the earth.

* * * * *

AWP CA E5 Twentynine Palms, CA [Revised]

Twentynine Palms Airport, CA
(Lat. 34°07′56″ N, long. 115°56′45″ W.)

That airspace extending upward from 700 feet above the surface within a 6.6 mile radius of the Twentynine Palms Airport. That airspace extending upward from 1200 feet above the surface bounded by a line beginning at lat. 34°17′00″ N, long. 115°25′03″ W.; to lat. 33°28′00″ N, long. 115°25′03″ W.; to lat. 33°28′00″ N, long. 116°18′03″ W.; to lat. 34°17′00″ W, long. 116°18′03″ W., thence to the point of beginning; excluding that airspace within Restricted Areas R–2501E, R–2501S, and R–2507.

* * * * *

Issued in Los Angeles, California, on February 22, 2002.

John Clancy,

Manager, Air Traffic Division, Western-Pacific Region.

[FR Doc. 02–5814 Filed 3–8–02; 8:45 am]

BILLING CODE 4910–13–M

DEPARTMENT OF DEFENSE

Department of the Army, Corps of Engineers

33 CFR Part 334

United States Navy Restricted Area, Hampton Roads and Willoughby Bay, Virginia

AGENCY: United States Army Corps of Engineers, DoD.

ACTION: Final rule.

SUMMARY: The U.S. Army Corps of Engineers is amending its regulations which establish a restricted area in waters adjacent to the Norfolk Naval Base at Norfolk, Virginia. This amendment will close off an open area on the south side of the base and changes the enforcement responsibility from the base commander to the Commander, Navy Region, Mid-Atlantic. The regulations are necessary to safeguard Navy vessels and United States Government facilities from sabotage and other subversive acts, accidents, or incidents of similar nature. These regulations are also necessary to protect the public from potentially hazardous conditions which may exist as a result of Navy use of the area.

EFFECTIVE DATE: April 10, 2002.

ADDRESSES: U.S. Army Corps of Engineers, ATTN: CECW–OR, 441 G Street, NW., Washington, DC 20314–1000.

FOR FURTHER INFORMATION CONTACT: Mr. Frank Torbett, Headquarters Regulatory Branch, Washington, DC at (202) 761–4618, or Mr. Rick Henderson, Corps of Engineers, Norfolk District, Regulatory Branch, at (757) 441–7653.

SUPPLEMENTARY INFORMATION: Pursuant to its authorities in section 7 of the Rivers and Harbors Act of 1917 (40 Stat. 266; 33 U.S.C. 1) and Chapter XIX, of the Army Appropriations Act of 1919 (40 Stat. 892; 33 U.S.C. 3) the Corps is amending the restricted area regulations in 33 CFR part 334 by amending section 334.300 which establishes a restricted area in waters adjacent to the Norfolk Naval Base at Norfolk, Virginia.

Procedural Requirements

a. Review Under Executive Order 12866

This rule is issued with respect to a military function of the Defense Department and the provisions of Executive Order 12866 do not apply.

b. Review Under the Regulatory Flexibility Act

This rule has been reviewed under the Regulatory Flexibility Act (Public Law 96–354) which requires the preparation of a regulatory flexibility analysis for any regulation that will have a significant economic impact on a substantial number of small entities (i.e., small businesses and small governments). The Corps expects that the economic impact of this restricted area would have practically no impact on the public, no anticipated navigational hazard or interference with existing waterway traffic and accordingly, certifies that this proposal will have no significant economic impact on small entities.

c. Review Under the National Environmental Policy Act

The Norfolk District has prepared an Environmental Assessment (EA) for this action. We have concluded, based on the minor nature of the proposed additional restricted area regulations, that this action will not have a significant impact to the quality of the human environment, and preparation of an Environmental Impact Statement (EIS) is not required. The EA may be reviewed at the Norfolk District office listed at the end of **FOR FURTHER INFORMATION CONTACT**, above.

d. Unfunded Mandates Act

This rule does not impose an enforceable duty among the private sector and, therefore, is not a Federal private sector mandate and is not subject to the requirements of Section 202 or 205 of the Unfunded Mandates Act. We have also found under section 203 of the Act, that small Governments will not be significantly and uniquely affected by this rulemaking.

e. Submission to Congress and the General Accounting Office

Pursuant to Section 801(a)(1)(A) of the Administrative Procedure Act, as amended by the Small Business Regulatory Enforcement Fairness Act of 1996, the Army has submitted a report containing this Rule to the U.S. Senate, the U.S. House of Representatives, and the Comptroller General of the General Accounting Office. This Rule is not a major Rule within the meaning of Section 804(2) of the Administrative Procedure Act, as amended.

List of Subjects in 33 CFR Part 334

Danger zones, Marine safety, Navigation (water), Restricted areas, Waterways.

For the reasons set out in the preamble, the Corps amends 33 CFR part 334 as follows:

PART 334—DANGER ZONE AND RESTRICTED AREA REGULATIONS

1. The authority citation for part 334 continues to read as follows:

Authority: 40 Stat. 266 (33 U.S.C. 1) and 40 Stat. 892 (33 U.S.C. 3).

2. Revise §334.300 to read as follows:

§ 334.300 Hampton Roads and Willoughby Bay, Norfolk Naval Base, Naval Restricted Area, Norfolk, Virginia

(a) *The area.* (1) The waters within an area beginning at latitude 36°55′55″ N, longitude 76°20′02″ W; thence northwesterly to latitude 36°56′00″ N, longitude 76°20′08″ W; thence northerly along the eastern limit of Norfolk Harbor Channel to latitude 36°57′52″ N, longitude 76°20′00″ W; thence easterly to latitude 36°57′52″ N, longitude 76°19′35″ W; thence to latitude 36°57′47.7″ N, 76°18′57″ W; thence southeasterly to latitude 36°57′26″ N, longitude 76°18′42″ W; thence easterly to latitude 36°57′26.2″ N, longitude 76°17′55.2″ W; thence southerly to latitude 36°57′05″ N, longitude 76°17′52″ W; thence southeasterly to latitude 36°56′56.2″ N, longitude 76°17′27″ W; thence northeasterly to latitude 36°57′10″ N, latitude 76°16′29″ W; thence to the shoreline at latitude 36°57′18.8″ N, longitude 76°16′22″ W at the Naval Air Station.

(2) Beginning at a point on the Naval Station shore at latitude 36°56′37.5″ N, longitude 76°19′44″ W; thence westerly and northerly along the breakwater to its extremity at latitude 36°56′41.5″ N, longitude 76°19′54″ W; thence westerly to a point on the eastern limit of Norfolk Harbor Channel at latitude 36°56′41.5″ N, longitude 76°20′05.5″ W; thence northerly along the eastern limit of Norfolk Harbor Channel to latitude 36°57′52″ N, longitude 76°20′00″ W; thence easterly to latitude 36°57′52″ N, longitude 76°19′35″ W; thence to latitude 36°57′47.7″ N., longitude 73°18′57″ W; thence southeasterly to latitude 36°57′26″ N, longitude 76°18′42″ W; thence easterly to latitude 36°57′26.2″ N, longitude 76°17′55.2″ W; thence southerly to latitude 36°57′05″ N, longitude 76°17′52″ W; thence southeasterly to latitude 36°56′56.2″ N, longitude 76°17′27″ W; thence northeasterly to latitude 36°57′10″ N, longitude 76°16′29″ W; and thence to the shoreline at latitude 36°57′18.8″ N, longitude 76°16′22″ W, at the Naval Air Station.

(b) *The regulation.* No vessel or persons may enter the restricted area unless specific authorization is granted by the Commander, Navy Region, Mid-Atlantic and/or other persons or agencies as he/she may designate.

(c) *Enforcement.* The regulation in this section, promulgated by the United States Army Corps of Engineers, shall be enforced by the Commander, Navy Region, Mid-Atlantic, and/or such agencies or persons as he/she may designate.

Dated: February 7, 2002.

Charles M. Hess,

Chief, Operations Division, Directorate of Civil Works.

[FR Doc. 02–5654 Filed 3–8–02; 8:45 am]

BILLING CODE 3710–92–P

ENVIRONMENTAL PROTECTION AGENCY

40 CFR Parts 51, 52, 96, and 97

[FRL–7156–3]

Availability of Additional Documents for the Response to the Remands in the Ozone Transport Cases Concerning the Method for Computing Growth for Electric Generating Units

AGENCY: Environmental Protection Agency (EPA).

ACTION: Notice of data availability for the NO_X SIP Call and the section 126 rule.

SUMMARY: The EPA is providing notice that it has placed in the dockets for the two main rulemakings concerning ozone-smog transport in the eastern part of the United States—the Nitrogen Oxides State Implementation Plan Call (NO_X SIP Call) and the Section 126

Rule—additional data relevant to the remands by the U.S. Court of Appeals for the District of Columbia Circuit (D.C. Circuit) concerning growth rates for seasonal heat input by electric generating units (EGUs). In both the NO_X SIP Call and Section 126 rulemakings, EPA determined control obligations with respect to EGUs through the same computation, which included, as one component, estimates of growth in heat input by the EGUs from 1996 to 2007. In two cases decided last year challenging the Section 126 rulemaking and a pair of rulemakings that made technical corrections to the NO_X SIP Call, the D.C. Circuit considered challenges to EPA's calculation of the growth estimate and its use of growth factors. In virtually identical decisions, the Court remanded the growth component to EPA for a better response to certain data presented by the affected States and industry concerning actual heat input, and for a better explanation of EPA's methodology. The EPA is in the process of responding to those remands.

On August 3, 2001, EPA published a notice of data availability announcing the placement, in the dockets for the NO_X SIP Call and Section 126 Rule, of new data concerning EGU growth rates (66 FR 40609 (NODA–1)). In NODA–1, EPA articulated its preliminary view that its growth calculations were reasonable and could be supported with a more robust explanation that takes into account the Court's concerns.

Today's document informs that EPA is considering additional data that it has recently placed, or will soon place, in the docket for the NO_X SIP Call Rule, Docket A–96–56, and that have been incorporated by reference in the docket for the Section 126 Rule, Docket No. A–97–43.

By March 29, 2002, EPA intends to determine whether it will confirm its preliminary view that the growth calculations were reasonable, or change those calculations. If EPA decides to confirm the growth calculations, it intends to complete its response to the Court's remands by that date.

Detailed background information describing the rulemakings, court decisions, and remands may be found in NODA–1.

DATES: Documents were placed in the docket on or about February 28, 2002.

ADDRESSES: Copies of all of the documents have been placed, or will shortly be placed, in the docket for the NO_X SIP Call rule, Docket No. A–96–56, and have been incorporated by reference in the docket for the Section 126 Rule, Docket No. A–97–43. These new documents, and other documents relevant to these rulemakings, are available for inspection at the Docket Office, located at 401 M Street SW., Room M–1500, Washington, DC 20460, between 8:00 a.m. and 5:30 p.m., Monday through Friday, excluding legal holidays. A reasonable fee may be charged for copying. Some of the documents have also been made, or will shortly be made, available in electronic form at the following EPA website: *http://www.epa.gov/airmarkets/fednox/126noda2/index.html.*

FOR FURTHER INFORMATION CONTACT: Questions concerning today's document should be directed to Kevin Culligan, Office of Atmospheric Programs, Clean Air Markets Division, 6204M, 1200 Pennsylvania Ave. NW., Washington, DC 20004, telephone (202) 564–9172, e-mail *culligan.kevin@epa.gov;* or Howard J. Hoffman, Office of General Counsel, 2344A, 1200 Pennsylvania Ave. NW., Washington, DC 20004, telephone (202) 564–5582, e-mail *hoffman.howard@epa.gov.* General questions about the Section 126 Rule or the NO_X SIP Call may be directed to Jan King, Office of Air Quality Planning and Standards, Air Quality Strategies and Standards Division, C539–02, Research Triangle Park, NC, 27711, telephone (919) 541–5665, e-mail *king.jan@epa.gov.*

SUPPLEMENTARY INFORMATION: The EPA has placed, or will shortly place, the information described below in the NO_X SIP Call rulemaking docket, A–96–56; and is incorporating it by reference into the Section 126 rulemaking docket, A–97–43.

XV C–01 U.S. Department of Energy web pages—21 SIP Call States—''Estimates of Energy Input at Electric Utilities, 1960–1999'' from *www.eia.doe.gov/emeu/sep/__/consum/eu.htm* where__is the 2 letter identifier for each State.

XV C–02 U.S. Department of Energy; Energy Information Administration (EIA); Electric Power Annual 1999 Volume 1—August 2000.

XV C–03 Department of Energy; Energy Information Administration; Electric Power Annual 2000 Volume 1—August 2001. Available at *www.eia.doe.gov/cneaf/electricity/epav1/epav1.pdf.*

XV C–05 Memorandum from Bill Neuffer to Docket (Feb. 22, 2002): Excel spreadsheets—21 SIP call States—Yearly Utility Fossil Heat inputs;'' ''Summary of 8 Yr Decreases in Yearly Fossil Fuel Heat Input—Electric Utilities.'' (Feb. 22, 2002)

XV C–07 Press releases on nuclear uprates in IL.

XV C–08 Press releases on repowering coal units to combined cycle units in IN.

XV C–09 Press release on boiler optimization.

XV C–10 1995–2001 ozone season heat input data for EGUs in the following States: AL, CT, DC, DE, GA, IL, IN, KY, MA, MD, MI, MO, NC, NJ, NY, OH, PA, RI, SC, TN, VA, and WV, including:

(a) For 1995—2000, this data is on a unit-by-unit basis for all units.

(b) For 2001, data for acid rain units is based on monitoring location and has not been converted to a unit-by-unit basis. All data for acid rain units is based on data reported to EPA. For other units it is based on data reported to EIA or data reported to EPA as part of the SIP Call/Section 126 rulemaking proccess.

XV C–11 Press release documenting off-line status of Cook Units 1 and 2.

XV C–12 Summary of EIA Electric Sales Data for the 1995 through 2001 ozone season.

XV C–13 Northeast Electric Reliability Council Map.

XV C–14 EIA Inventory of Electric Utility Power Plants in the US, 1999.

XV C–15 EIA Inventory of Electric Utility Power Plants in the US, 1998.

XV C–16 EIA Inventory of Electric Utility Power Plants in the US, 1997.

(For XV C–14, XV C–15, and XV C–16 above, see website *http://www/eia.doe.gov/cneaf/electricity/ipp/ippbackissues.html).*

XV C–17 EPA Region 4 National Combustion Turbine Spreadsheet maintained at *http://www.epa.gov/region4/air/permits/national_ct_list.xls)* as of February 2002.

The EPA may place additional documents in the docket, and if EPA does so, EPA will announce their availability by posting a notice on the *http://www.epa.gov/airmarkets/fednox/126noda2/index.html* website.

Dated: February 28, 2002.

John D. Bachman,

Acting Director, Office of Air Quality Planning and Standards.

[FR Doc. 02–5742 Filed 3–8–02; 8:45 am]

BILLING CODE 6560–50–P

FEDERAL COMMUNICATIONS COMMISSION

47 CFR Part 54

[CC Docket 96–45; FCC 02–41]

Federal-State Joint Board on Universal Service

AGENCY: Federal Communications Commission.

ACTION: Final rule.

SUMMARY: In this document, the Commission asks the Joint Board to begin a comprehensive review of the non-rural high-cost support mechanism. In light of the need to act expeditiously on the issues, the Commission will delay initiation of a proceeding to consider future action on the rural high-cost support mechanism.

DATES: Comments are due April 10, 2002. Reply comments are due April 25, 2002.

FOR FURTHER INFORMATION CONTACT: Katie King at (202) 418–7491 or Jennifer Schneider at (202) 418–0425 in the Accounting Policy Division, Common Carrier Bureau.

SUPPLEMENTARY INFORMATION: This is a summary of the Commission's *Order* in CC Docket No. 96–45 released on February 15, 2002. The Order is related to a *Notice of a Proposed Rulemaking* (NPRM) that is published elsewhere in this issue. The full text of this document is available for public inspection during regular business hours in the FCC Reference Center, Room CY–A257, 445 12th Street, SW., Washington, DC 20554.

I. Introduction

1. In this Order, the Commission refers the record collected in the NPRM to the Joint Board for a recommended decision. In the NPRM, the Commission seeks comment on issues from the *Ninth Report and Order*, 66 FR 67416, December 1, 1999, remanded by the United States Court of Appeals for the Tenth Circuit. As part of the referral, the Commission also asks the Joint Board to begin a comprehensive review of the non-rural high-cost support mechanism. In light of the need to act expeditiously on the issues on remand, the Commission will delay initiation of a proceeding to consider future action on the rural high-cost support mechanism.

II. The Commission's Plan for Universal Service and Joint Board Referral

2. The Joint Board has previously considered and given recommendations on many of the issues in this docket. The Commission concludes that further Joint Board input will be beneficial for consideration of the issues on remand. Accordingly, the Commission refers the issues described in the NPRM, and the record developed herein, to the Joint Board for a recommended decision. Specifically, the Commission asks the Joint Board to provide a recommended decision on (1) how the Commission should define the key statutory terms ''reasonably comparable'' and ''sufficient''; (2) whether, in light of the interpretation of those key statutory terms, the Commission can and should maintain the previously established benchmark or, in the alternative, should adopt a new benchmark or benchmarks; and (3) how the Commission should induce states to implement state universal service policies. The Commission intends these referral issues to encompass the review of the non-rural mechanism that the Commission previously stated would occur by January 1, 2003. At their core, the issues on remand require an examination of the non-rural mechanism. The Commission directs the Joint Board to base its recommended decision on the record developed from the NPRM and present its recommended decision to the Commission no later than August 15, 2002. The Commission will then expeditiously consider the Joint Board's recommendations and issue an order in response to the court's remand.

3. Finally, although the Commission has determined that all carriers will eventually receive universal service support based upon their forward-looking costs, it has allowed rural carriers to continue to calculate support under a modified version of the embedded cost mechanism for five years. The Commission previously stated that it intended to refer the complex issues surrounding rural high-cost support to the Joint Board, ''no later than January 1, 2002'' in order to begin the process of determining what regime should be in place upon the expiration of the Rural Task Force plan. The Commission further stated that, ''in the context of the Joint Board's consideration of an appropriate high-cost mechanism for rural telephone companies, [it anticipates] conducting a comprehensive review of the high-cost support mechanisms for rural and non-rural carriers as a whole to ensure that both mechanisms function efficiently and in a coordinated fashion.''

4. In light of the need to expeditiously address the issues remanded by the court, the Commission now believes it appropriate to delay briefly the initiation of a comprehensive examination of how the rural and non-rural mechanisms function together. The Commission will refer issues concerning the rural high-cost support mechanism and how that mechanism functions with the non-rural mechanism to the Joint Board at a later date.

III. Ordering Clauses

5. Pursuant to sections 1, 4(i) and (j), 254, and 410 of the Communications Act of 1934, as amended, 47 U.S.C. 151, 154(i), 154(j), 254, and 410, that the issues specified in the Order are referred to the Federal-State Joint Board on Universal Service for a recommendation to be received by the Commission no later than August 15, 2002.

List of Subjects in 47 CFR Part 54

Communications common carriers, Telecommunications, Telephone.

Federal Communications Commission.

William F. Caton,

Acting Secretary.

[FR Doc. 02–5675 Filed 3–8–02; 8:45 am]

BILLING CODE 6712–01–P

FEDERAL COMMUNICATIONS COMMISSION

47 CFR Part 73

[DA 02–499, MM Docket No. 01–335, RM–10338]

Digital Television Broadcast Service; Charleston, SC

AGENCY: Federal Communications Commission.

ACTION: Final rule.

SUMMARY: The Commission, at the request of Media General Communications, Inc., licensee of station WCBD–TV, NTSC channel 2, Charleston, South Carolina, substitutes DTV channel 50 for DTV channel 59. *See* 66 FR 66383, December 26, 2001. DTV channel 50 can be allotted to Charleston, South Carolina, in compliance with the principle community coverage requirements of Section 73.625(a) at reference coordinates 32–56–24 N. and 79–41–45 W. with a power of 1000, HAAT of 561 meters and with a DTV service population of 846 thousand.

With this action, this proceeding is terminated.

DATES: Effective April 22, 2002.

FOR FURTHER INFORMATION CONTACT: Pam Blumenthal, Mass Media Bureau, (202) 418–1600.

SUPPLEMENTARY INFORMATION: This is a synopsis of the Commission's Report and Order, MM Docket No. 01–335, adopted March 1, 2002, and released

March 6, 2002. The full text of this document is available for public inspection and copying during regular business hours in the FCC Reference Information Center, Portals II, 445 12th Street, SW, Room CY–A257, Washington, DC. This document may also be purchased from the Commission's duplicating contractor, Qualex International, Portals II, 445 12th Street, SW, CY–B402, Washington, DC, 20554, telephone 202–863–2893, facsimile 202–863–2898, or via e-mail *qualexint@aol.com.*

List of Subjects in 47 CFR Part 73

Television, Digital television broadcasting.

Part 73 of Title 47 of the Code of Federal Regulations is amended as follows:

PART 73—[AMENDED]

1. The authority citation for Part 73 continues to read as follows:

Authority: 47 U.S.C. 154, 303, 334, 336.

§73.622 [Amended]

2. Section 73.622(b), the Table of Digital Television Allotments under South Carolina, is amended by removing DTV channel 59 and adding DTV channel 50 at Charleston.

Federal Communications Commission.

Barbara A. Kreisman,

Chief, Video Services Division, Mass Media Bureau.

[FR Doc. 02–5708 Filed 3–8–02; 8:45 am]

BILLING CODE 6712–01–P

DEPARTMENT OF COMMERCE

National Oceanic and Atmospheric Administration

50 CFR Part 679

[Docket No. 011218304–1304-01; I.D. 030102B]

Fisheries of the Exclusive Economic Zone Off Alaska; Pollock in Statistical Area 630 of the Gulf of Alaska

AGENCY: National Marine Fisheries Service (NMFS), National Oceanic and Atmospheric Administration (NOAA), Commerce.

ACTION: Closure.

SUMMARY: NMFS is prohibiting directed fishing for pollock in Statistical Area 630 in the Gulf of Alaska (GOA). This action is necessary to prevent exceeding the B season allowance of the pollock total allowable catch (TAC) for Statistical Area 630.

DATES: Effective 1200 hrs, Alaska local time (A.l.t.), March 11, 2002 until 1200 hrs, A.l.t., August 25, 2002.

FOR FURTHER INFORMATION CONTACT: Mary Furuness, 907–586–7228.

SUPPLEMENTARY INFORMATION: NMFS manages the groundfish fishery in the GOA exclusive economic zone according to the Fishery Management Plan for Groundfish of the Gulf of Alaska (FMP) prepared by the North Pacific Fishery Management Council under authority of the Magnuson-Stevens Fishery Conservation and Management Act. Regulations governing fishing by U.S. vessels in accordance with the FMP appear at subpart H of 50 CFR part 600 and 50 CFR part 679.

Within any fishing year, underage or overage of a seasonal allowance may be added to or subtracted from subsequent seasonal allowances in a manner to be determined by the Administrator, Alaska Region, NMFS (Regional Administrator), provided that the sum of the revised seasonal allowances does not exceed 30 percent of the annual TAC apportionment for the Central and Western Regulatory Areas in the GOA (§ 679.20 (a)(5)(ii)(C)). For 2002, 30 percent of the annual TAC for the Central and Western Regulatory Areas is 15,187 mt. For 2002, the Regional Administrator has determined that within each area for which a seasonal allowance is established, any overage or underage of harvest at the beginning of the next season(s) shall be subtracted from or added to the following season provided that the resulting sum of seasonal allowances in the Central and Western Regulatory Areas does not exceed 15,187 mt in any single season. The B season allowance of the pollock TAC in Statistical Area 630 is 1,122 metric tons (mt) as established by an emergency rule implementing 2002 harvest specifications and associated management measures for the groundfish fisheries off Alaska (67 FR 956, January 8, 2002). The Regional Administrator hereby increases the B season pollock TAC by 381 mt. This amount is the A season pollock under harvest in Statistical Area 630 and provides for an aggregate B season allowance in the Central and Western Regulatory Areas that does not exceed 15,187 mt. In accordance with § 679.20 (a)(5)(ii)(C), the B season allowance of pollock TAC in Statistical Area 630 is 1,503 mt.

In accordance with § 679.20 (d)(1)(i), the Regional Administrator has determined that the B season allowance of the pollock TAC in Statistical Area 630 will soon be reached. Therefore, the Regional Administrator is establishing a directed fishing allowance of 1,203 mt, and is setting aside the remaining 300 mt as bycatch to support other anticipated groundfish fisheries. In accordance with § 679.20 (d)(1)(iii), the Regional Administrator finds that this directed fishing allowance will soon be reached. Consequently, NMFS is prohibiting directed fishing for pollock in Statistical Area 630.

Maximum retainable bycatch amounts may be found in the regulations at § 679.20(e) and (f).

Classification

This action responds to the best available information recently obtained from the fishery. The Assistant Administrator for Fisheries, NOAA, finds that the need to immediately implement this action to prevent exceeding the amount of the 2002 A season pollock TAC specified for Statistical Area 630 of the GOA constitutes good cause to waive the requirement to provide prior notice and opportunity for public comment pursuant to the authority set forth at 5 U.S.C. 553 (b)(3)(B) and 50 CFR 679.20 (b)(3)(iii)(A), as such procedures would be unnecessary and contrary to the public interest. Similarly, the need to implement these measures in a timely fashion to prevent exceeding the 2002 B season pollock TAC specified for Statistical Area 630 of the GOA constitutes good cause to find that the effective date of this action cannot be delayed for 30 days. Accordingly, under 5 U.S.C. 553(d), a delay in the effective date is hereby waived.

This action is required by § 679.20 and is exempt from review under Executive Order 12866.

Authority: 16 U.S.C. 1801 *et seq.*

Dated: March 5, 2002.

Bruce C. Morehead,

Acting Director, Office of Sustainable Fisheries, National Marine Fisheries Service.

[FR Doc. 02–5770 Filed 3–11–02; 8:45 am]

BILLING CODE 3510–22–S

Proposed Rules

Federal Register
Vol. 67, No. 47
Monday, March 11, 2002

This section of the FEDERAL REGISTER contains notices to the public of the proposed issuance of rules and regulations. The purpose of these notices is to give interested persons an opportunity to participate in the rule making prior to the adoption of the final rules.

DEPARTMENT OF AGRICULTURE

Agricultural Marketing Service

7 CFR Part 985

[Docket No. FV–02–985–1 PR]

Marketing Order Regulating the Handling of Spearmint Oil Produced in the Far West; Salable Quantities and Allotment Percentages for the 2002–2003 Marketing Year

AGENCY: Agricultural Marketing Service, USDA.

ACTION: Proposed rule.

SUMMARY: This rule would establish the quantity of spearmint oil produced in the Far West, by class, that handlers may purchase from, or handle for, producers during the 2002–2003 marketing year, which begins on June 1, 2002. This rule invites comments on the establishment of salable quantities and allotment percentages for Class 1 (Scotch) spearmint oil of 849,471 and 45 percent, respectively, and for Class 3 (Native) spearmint oil of 800,761 and 38 percent, respectively. The Spearmint Oil Administrative Committee (Committee), the agency responsible for local administration of the marketing order for spearmint oil produced in the Far West, recommended this rule for the purpose of avoiding extreme fluctuations in supplies and prices, to help maintain stability in the spearmint oil market.

DATES: Comments must be received by March 26, 2002.

ADDRESSES: Interested persons are invited to submit written comments concerning this proposed rule. Comments must be sent to the Docket Clerk, Marketing Order Administration Branch, Fruit and Vegetable Programs, AMS, USDA, 1400 Independence Avenue SW., STOP 0237, Washington, DC 20250–0237; Fax: (202) 720–8938; or E-mail: *moab.docketclerk@usda.gov*. All comments should reference the docket number and the date and page number of this issue of the **Federal Register** and will be made available for public inspection in the Office of the Docket Clerk during regular business hours, or can be viewed at: *http://www.ams.usda.gov/fv/moab.html*.

FOR FURTHER INFORMATION CONTACT: Robert J. Curry, Northwest Marketing Field Office, Marketing Order Administration Branch, Fruit and Vegetable Programs, AMS, USDA, 1220 SW Third Avenue, suite 385, Portland, Oregon 97204; telephone: (503) 326–2724; Fax: (503) 326–7440; or George Kelhart, Technical Advisor, Marketing Order Administration Branch, Fruit and Vegetable Programs, AMS, USDA, 1400 Independence Avenue, SW., STOP 0237, Washington, DC 20250–0237; telephone: (202) 720–2491; Fax: (202) 720–8938.

Small businesses may request information on complying with this regulation by contacting Jay Guerber, Marketing Order Administration Branch, Fruit and Vegetable Programs, AMS, USDA, 1400 Independence Avenue SW., STOP 0237, Washington, DC 20250–0237; telephone (202) 720–2491, Fax: (202) 720–8938, or E-mail: *Jay.Guerber@usda.gov*.

SUPPLEMENTARY INFORMATION: This proposal is issued under Marketing Order No. 985 (7 CFR part 985), as amended, regulating the handling of spearmint oil produced in the Far West (Washington, Idaho, Oregon, and designated parts of Nevada and Utah), hereinafter referred to as the ''order.'' This order is effective under the Agricultural Marketing Agreement Act of 1937, as amended (7 U.S.C. 601–674), hereinafter referred to as the ''Act.''

The Department of Agriculture (USDA) is issuing this rule in conformance with Executive Order 12866.

This proposal has been reviewed under Executive Order 12988, Civil Justice Reform. Under the provisions of the order now in effect, salable quantities and allotment percentages may be established for classes of spearmint oil produced in the Far West. This proposed rule would establish the quantity of spearmint oil produced in the Far West, by class, that may be purchased from or handled for producers by handlers during the 2002–2003 marketing year, which begins on June 1, 2002. This proposed rule would not preempt any State or local laws, regulations, or policies, unless they present an irreconcilable conflict with this rule.

The Act provides that administrative proceedings must be exhausted before parties may file suit in court. Under section 608c(15)(A) of the Act, any handler subject to an order may file with USDA a petition stating that the order, any provision of the order, or any obligation imposed in connection with the order is not in accordance with law and request a modification of the order or to be exempted therefrom. A handler is afforded the opportunity for a hearing on the petition. After the hearing USDA would rule on the petition. The Act provides that the district court of the United States in any district in which the handler is an inhabitant, or has his or her principal place of business, has jurisdiction to review USDA's ruling on the petition, provided an action is filed not later than 20 days after the date of the entry of the ruling.

Pursuant to authority in §§ 985.50, 985.51, and 985.52 of the order, the Committee recommended the salable quantities and allotment percentages for the 2002–2003 marketing year at its October 3, 2001, meeting. For Scotch spearmint oil, in a vote of six in favor, one opposed, and one abstention, the Committee recommended the establishment of a salable quantity and allotment percentage of 849,471 pounds and 45 percent, respectively. For Native spearmint oil, in a vote of seven in favor and one opposed, the Committee recommended the establishment of a salable quantity and allotment percentage of 800,761 pounds and 38 percent, respectively.

This proposed rule would limit the amount of spearmint oil that handlers may purchase from, or handle for, producers during the 2002–2003 marketing year, which begins on June 1, 2002. Salable quantities and allotment percentages have been placed into effect each season since the order's inception in 1980.

The U.S. production of spearmint oil is concentrated in the Far West, primarily Washington, Idaho, and Oregon (part of the area covered by the marketing order). Spearmint oil is also produced in the Midwest. The production area covered by the marketing order currently accounts for approximately 55 percent of the annual U.S. production of Scotch spearmint oil

and over 90 percent of the annual U.S. production of Native spearmint oil.

When the order became effective in 1980, the United States produced nearly 100 percent of the world's supply of Scotch spearmint oil, of which approximately 72 percent was produced in the regulated production area in the Far West. The Far West continued to produce an average of about 69 percent of the world's Scotch spearmint oil supply during the period from 1980 to 1990. International production characteristics have changed since 1990, however, with foreign Scotch spearmint oil production contributing significantly to world production. The Far West's market share as a percent of total world sales has averaged about 44 percent since 1990.

During the period between 1996 and 2000, the Committee employed a marketing strategy for Scotch spearmint oil that was intended to foster market stability and expand market share. This marketing strategy was an attempt to remain competitive on an international level by regaining a substantial amount of the Far West's historical share of the global market for this class of oil. In implementing this strategy, the Committee had been recommending the establishment of a salable quantity and allotment percentage for Scotch spearmint oil in excess of the estimated trade demand for each marketing year. In the development of its annual marketing policy statements during this period, the Committee's strategy considered general market conditions for each class of spearmint oil, including the Far West's world market share as it relates to the overall market stability of spearmint oil.

During its deliberations at the October 11, 2000, meeting, however, the Committee concluded that this marketing strategy for Scotch spearmint oil had not been entirely effective. Although sales had increased, the Far West's market share as a percentage of total world sales had not increased on average, and the market price for Scotch spearmint oil had continued to decline throughout this period. During the 1998–1999 and 1999–2000 marketing years, the price paid to producers for Scotch spearmint oil dropped to a low of $7.00 per pound. Although the current price for Scotch oil has increased to between $7.50 and $8.00 per pound, the Committee continues to believe that such returns are generally below the cost of production for most producers, which, according to the Washington State University Cooperative Extension Service (WSU), is currently between $13.87 and $14.62 per pound.

For the 2001–2002 marketing year—the current marketing year—the Committee determined at its October 11, 2000, meeting, that it would attempt to stabilize prices at a reasonable level while still considering global market share. The Committee's transitional recommendation for Scotch spearmint oil for the 2001–2002 marketing year was, therefore, based on a desire to remain competitive on an international level while maintaining the supply of oil at a level that could enhance prices and help producers remain solvent. The 2001–2002 salable quantity is somewhat higher than the estimated trade demand. This shifted the Committee's Scotch spearmint oil market strategy from one considering primarily the Far West's share of the world market to an approach primarily considering current price, supply, and demand. This action made an adequate supply of Scotch spearmint oil available as evidenced by the substantial amount of oil carried into the marketing year.

Although still concerned with global spearmint oil market share, the Committee calculated the 2002–2003 Scotch spearmint oil salable quantity and allotment percentage by primarily utilizing information on price and available supply as they are affected by the estimated trade demand. The recommendation for 2002–2003 implements the Committee's stated intent of keeping adequate supplies available at all times, while trying to bring prices to growers to a level that will help them stay in business and still allow the industry to compete with less expensive oil produced outside the regulated area. The industry continues to be interested in expanding market share. The Committee's calculations are detailed below.

Despite the recent downward trend in the price of both classes of spearmint oil, the Committee believes that the order has contributed extensively to the stabilization of producer prices, which prior to 1980 experienced wide fluctuations from year to year. According to the National Agricultural Statistics Service, for example, the average price paid for both classes of spearmint oil ranged from about $4.00 per pound to about $12.50 per pound during the period between 1968 and 1980. Excluding the most recent three marketing years, prices since the order's inception have generally stabilized at about $11.00 per pound for Native spearmint oil and at about $13.00 per pound for Scotch spearmint oil. Over the last few years, the price has dropped to between $8.00 and $11.00 per pound and $9.00 and $10.00 per pound, respectively, for Scotch and Native spearmint oils despite the Committee's efforts to balance available supplies with demand. Based on comments made at the Committee's meeting, factors that are currently contributing to depressed prices include the general uncertainty being experienced through the U.S. economy and the continuing overall weak farm situation, as well as an abundant global supply of spearmint oil.

Conditions similar to those affecting the Scotch spearmint oil market contributed to the Committee's current recommendation for a salable quantity of 800,761 pounds and an allotment percentage of 38 percent for Native spearmint oil for the 2002–2003 marketing year. The supply and demand characteristics of the current Native spearmint oil market are keeping the price flat at about $9.00 per pound—a level the Committee considers too low for the majority of producers to maintain viability. The WSU study indicates that the cost of producing Native spearmint oil currently ranges from $10.26 to $10.92 per pound. Thus, with over 90 percent of the world production currently located in the Far West, the Committee's method of calculating the Native spearmint oil salable quantity and allotment percentage continues to primarily utilize information on price and available supply as they are affected by the estimated trade demand. The Committee's stated intent is to make adequate supplies available to meet market needs and improve producer prices.

The Committee based its recommendation for the proposed salable quantity and allotment percentage for each class of spearmint oil for the 2002–2003 marketing year on the information discussed above, as well as the data outlined below.

(1) Class 1 (Scotch) Spearmint Oil

(A) Estimated carry-in on June 1, 2002—260,181 pounds. This figure is the difference between the estimated 2001–2002 marketing year trade demand of 860,000 pounds and the revised 2001–2002 marketing year total available supply of 1,120,181 pounds. The 2001–2002 marketing year total available supply was revised due to differences in the carry-in estimated on October 11, 2000, and the actual carry-in on June 1, 2001, as well as producer deficiencies on June 1, 2001. A producer is deficient when the producer is unable to produce oil equal to his or her salable quantity and is unable to fill this deficiency from reserve pool oil or excess oil from another producer. When prices are below the producer's costs of

production, they reduce acres and produce less oil.

(B) Estimated trade demand for the 2002–2003 marketing year—875,000 pounds. This figure represents the Committee's estimate based on the average of the estimates provided by producers at five Scotch spearmint oil production area meetings held in September 2001, as well as estimates provided by handlers and others at the meeting. Handler trade demand estimates for the 2002–2003 marketing year ranged from 675,000 to 900,000 pounds. The last five year average sales were 936,000 pounds.

(C) Salable quantity required from the 2002–2003 marketing year production—614,819 pounds. This figure is the difference between the estimated 2002–2003 marketing year trade demand (875,000 pounds) and the estimated carry-in on June 1, 2002 (260,181 pounds).

(D) Total estimated allotment base for the 2002–2003 marketing year—1,887,713 pounds. This figure represents a one-percent increase over the revised 2001–2002 total allotment base. This figure is generally revised each year on June 1 due to producer base being lost based on the provisions of § 985.53(e). The revision is usually minimal.

(E) Computed allotment percentage—32.6 percent. This percentage is computed by dividing the required salable quantity by the total estimated allotment base.

(F) Recommended allotment percentage—45 percent. This recommendation is based on the Committee's determination that a decrease from the current season's allotment percentage of 48 percent to the computed 32.6 percent would be too drastic a reduction in a single year. The recommended level of 45 percent is also only slightly below the 5-year average sales, and if sales in 2002–2003 are average or better, the carry-out would be reduced.

(G) The Committee's recommended salable quantity—849,471 pounds. This figure is the product of the recommended allotment percentage and the total estimated allotment base.

(H) Estimated available supply for the 2002–2003 marketing year—1,109,652 pounds. This figure is the sum of the 2002–2003 recommended salable quantity (849,471 pounds) and the estimated carry-in on June 1, 2002 (260,181 pounds).

(2) Class 3 (Native) Spearmint Oil

(A) Estimated carry-in on June 1, 2002—198,583 pounds. This figure is the difference between the estimated 2001–2002 marketing year trade demand of 929,000 pounds and the revised 2001–2002 marketing year total available supply of 1,127,583 pounds.

(B) Estimated trade demand for the 2002–2003 marketing year—960,000 pounds. This figure is based on input from producers at the four Native spearmint oil production area meetings held in September 2001, from handlers, and from Committee members and other meeting participants at the October 3, 2001, meeting. The average estimated trade demand at the four production area meetings was 975,000 pounds.

(C) Salable quantity required from the 2002–2003 marketing year production—761,417 pounds. This figure is the difference between the estimated 2002–2003 marketing year trade demand (960,000 pounds) and the estimated carry-in on June 1, 2002 (198,583 pounds).

(D) Total estimated allotment base for the 2002–2003 marketing year—2,107,267 pounds. This figure represents a one percent increase over the revised 2001–2002 total allotment base. This figure is generally revised each year on June 1 due to producer base being lost based on the provisions of § 985.53(e). The revision normally involves a minimal amount of spearmint oil.

(E) Computed allotment percentage—36.1 percent. This percentage is computed by dividing the required salable quantity by the total estimated allotment base.

(F) Recommended allotment percentage—38 percent. This is the Committee's recommendation based on the computed allotment percentage, the average of the computed allotment percentage figures from the four production area meetings (38.1 percent), and input from producers and handlers at the October 3, 2001, meeting.

(G) The Committee's recommended salable quantity—800,761 pounds. This figure is the product of the recommended allotment percentage and the total estimated allotment base.

(H) Estimated available supply for the 2002–2003 marketing year—999,344 pounds. This figure is the sum of the 2002–2003 recommended salable quantity (800,761 pounds) and the estimated carry-in on June 1, 2002 (198,583 pounds).

The salable quantity is the total quantity of each class of spearmint oil which handlers may purchase from or handle on behalf of producers during a marketing year. Each producer is allotted a share of the salable quantity by applying the allotment percentage to the producer's allotment base for the applicable class of spearmint oil.

The Committee's recommended Scotch and Native spearmint oil salable quantities and allotment percentages of 849,471 pounds and 45 percent and 800,761 and 38 percent, respectively, are based on the Committee's goal of maintaining market stability by avoiding extreme fluctuations in supplies and prices and the anticipated supply and trade demand during the 2002–2003 marketing year. The proposed salable quantities are not expected to cause a shortage of spearmint oil supplies. Any unanticipated or additional market demand for spearmint oil which may develop during the marketing year can be satisfied by an increase in the salable quantities. Both Scotch and Native spearmint oil producers who produce more than their annual allotments during the 2002–2003 season may transfer such excess spearmint oil to a producer with spearmint oil production less than his or her annual allotment or put it into the reserve pool.

This proposed regulation, if adopted, would be similar to those which have been issued in prior seasons. Costs to producers and handlers resulting from this proposed action are expected to be offset by the benefits derived from a stable market and improved returns. In conjunction with the issuance of this proposed rule, the Committee's marketing policy statement for the 2002–2003 marketing year has been reviewed by USDA. The Committee's marketing policy statement, a requirement whenever the Committee recommends volume regulations, fully meets the intent of § 985.50 of the order. During its discussion of potential 2002–2003 salable quantities and allotment percentages, the Committee considered: (1) The estimated quantity of salable oil of each class held by producers and handlers; (2) the estimated demand for each class of oil; (3) prospective production of each class of oil; (4) total of allotment bases of each class of oil for the current marketing year and the estimated total of allotment bases of each class for the ensuing marketing year; (5) the quantity of reserve oil, by class, in storage; (6) producer prices of oil, including prices for each class of oil; and (7) general market conditions for each class of oil, including whether the estimated season average price to producers is likely to exceed parity. Conformity with the USDA's ''Guidelines for Fruit, Vegetable, and Specialty Crop Marketing Orders'' has also been reviewed and confirmed.

The establishment of these salable quantities and allotment percentages would allow for anticipated market needs. In determining anticipated market needs, consideration by the

Committee was given to historical sales, as well as changes and trends in production and demand. This rule also provides producers with information on the amount of spearmint oil which should be produced for next season in order to meet anticipated market demand.

Initial Regulatory Flexibility Analysis

Pursuant to requirements set forth in the Regulatory Flexibility Act (RFA), the Agricultural Marketing Service (AMS) has considered the economic impact of this action on small entities. Accordingly, AMS has prepared this initial regulatory flexibility analysis.

The purpose of the RFA is to fit regulatory actions to the scale of business subject to such actions in order that small businesses will not be unduly or disproportionately burdened. Marketing orders issued pursuant to the Act, and rules issued thereunder, are unique in that they are brought about through group action of essentially small entities acting on their own behalf. Thus, both statutes have small entity orientation and compatibility.

There are 7 spearmint oil handlers subject to regulation under the order, and approximately 118 producers of Class 1 (Scotch) spearmint oil and approximately 107 producers of Class 3 (Native) spearmint oil in the regulated production area. Small agricultural service firms are defined by the Small Business Administration (SBA) (13 CFR 121.201) as those having annual receipts of less than $5,000,000, and small agricultural producers are defined as those whose annual receipts are less than $750,000.

Based on the SBA's definition of small entities, the Committee estimates that 2 of the 7 handlers regulated by the order could be considered small entities. Most of the handlers are large corporations involved in the international trading of essential oils and the products of essential oils. In addition, the Committee estimates that 30 of the 118 Scotch spearmint oil producers and 19 of the 107 Native spearmint oil producers could be classified as small entities under the SBA definition. Thus, a majority of handlers and producers of Far West spearmint oil may not be classified as small entities.

The Far West spearmint oil industry is characterized by producers whose farming operations generally involve more than one commodity, and whose income from farming operations is not exclusively dependent on the production of spearmint oil. A typical spearmint oil-producing operation has enough acreage for rotation such that the total acreage required to produce the crop is about one-third spearmint and two-thirds rotational crops. An average spearmint oil-producing farm has to have considerably more acreage than is planted to spearmint during any given season. Crop rotation is an essential cultural practice in the production of spearmint oil for weed, insect, and disease control. To remain economically viable with the added costs associated with spearmint oil production, most spearmint oil-producing farms fall into the SBA category of large businesses.

This proposed rule would establish the quantity of spearmint oil produced in the Far West, by class, that handlers may purchase from, or handle for, producers during the 2002–2003 marketing year. The Committee recommended this rule to help maintain stability in the spearmint oil market by avoiding extreme fluctuations in supplies and prices. Establishing quantities to be purchased or handled during the marketing year through volume regulations allows growers to plan their mint planting and harvesting to meet expected market needs. This action is authorized by the provisions of §§ 985.50, 985.51 and 985.52 of the order.

Small spearmint oil producers generally are not as extensively diversified as larger ones and as such are more at risk to market fluctuations. Such small farmers generally need to market their entire annual crop and do not have the luxury of having other crops to cushion seasons with poor spearmint oil returns. Conversely, large diversified producers have the potential to endure one or more seasons of poor spearmint oil markets because incomes from alternate crops could support the operation for a period of time. Being reasonably assured of a stable price and market provides small producing entities with the ability to maintain proper cash flow and to meet annual expenses. Thus, the market and price stability provided by the order potentially benefit the small producer more than such provisions benefit large producers. Even though a majority of handlers and producers of spearmint oil may not be classified as small entities, the volume control feature of this order has small entity orientation.

Demand for spearmint oil tends to be relatively stable from year-to-year. The demand for spearmint oil is expected to grow slowly for the foreseeable future because the demand for consumer products that use spearmint oil will likely expand slowly, in line with population growth.

Demand for spearmint oil at the farm level is derived from retail demand for spearmint-flavored products at retail such as chewing gum, toothpaste, and mouthwash. The manufacturers of these products are by far the largest users of mint oil. However, spearmint flavoring is generally a very minor component of the products in which it is used, so changes in the raw product price have no impact on retail prices for those goods.

Spearmint oil production tends to be cyclical. Years of large production, with demand remaining reasonably stable, have led to periods in which large producer stocks of unsold spearmint oil have depressed producer prices for a number of years. Shortages and high prices may follow in subsequent years, as producers respond to price signals by cutting back production.

The wide fluctuations in supply and prices that result from this cycle, which was even more pronounced before the creation of the marketing order, can create liquidity problems for some producers. The marketing order was designed to reduce the price impacts of the cyclical swings in production. However, producers have been less able to weather these cycles in recent years because of the decline in prices of many of the alternative crops they grow. As noted earlier, almost all spearmint oil producers diversify by growing other crops.

Instability in the spearmint oil subsector of the mint industry is much more likely to originate on the supply side than the demand side. Fluctuations in yield and acreage planted from season-to-season tend to be larger than fluctuations in the amount purchased by buyers.

The significant variability is illustrated by the fact that between 1980 and 2000, production tended to vary by 25 percent above and below the average production level of 1,888,810 pounds. The 25 percent figure (469,321 pounds) is the standard deviation around the average production level. Production in the shortest crop year was about 48 percent of the 21-year average and the largest crop was approximately 163 percent. A key consequence is that in years of oversupply and low prices, the season average producer price of spearmint oil is below the average cost of production (as measured by the Washington State University Cooperative Extension Service).

In an effort to stabilize prices, the spearmint oil industry uses the volume control mechanisms authorized under the order. This authority allows the Committee to recommend a salable quantity and allotment percentage for each class of oil for the upcoming marketing year. The salable quantity for

each class of oil is the total volume of that oil which producers may sell during the marketing year. The allotment percentage for each class of spearmint oil is derived by dividing the salable quantity by the total allotment base.

Each producer is then issued an annual allotment certificate, in pounds, for the applicable class of oil, which is calculated by multiplying the producer's allotment base by the applicable allotment percentage. This is the amount of oil for the applicable class that the producer can sell.

By November 1 of each year, the Committee identifies any oil that individual producers have produced above the volume specified on their annual allotment certificates. This excess oil is placed in a reserve pool administered by the Committee.

There is a reserve pool for each class of oil which may not be sold during the current marketing year unless the Secretary approves a Committee recommendation to make a portion of the pool available. However, limited quantities of reserve oil are typically sold to fill deficiencies. A deficiency occurs when on-farm production is less than a producer's allotment. In that case, a producer's own reserve oil can be sold to fill that deficiency. Excess production (higher than the producer's allotment) can be sold to fill other producers' deficiencies.

In any given year, the total available supply of spearmint oil is composed of current production plus carry-over stocks from the previous crop. The Committee seeks to maintain market stability by balancing supply and demand, and to close the marketing year with an appropriate level of carry-out. If the industry has production in excess of the salable quantity, then the reserve pool absorbs the surplus quantity of spearmint oil, which goes unsold during that year, unless the oil is needed for unanticipated sales.

Under its provisions, the order may attempt to stabilize prices by (1) limiting supply and establishing reserves in high production years, thus minimizing the price-depressing effect that excess producer stocks have on unsold spearmint oil, and (2) ensuring that stocks are available in short supply years when prices would otherwise increase dramatically. The reserve pool grown in large production years and stocks are drawn down in short crop years.

An econometric model was used to assess the impact that volume control has on the prices producers receive for their commodity. Without volume control, spearmint oil markets would likely be over-supplied, resulting in low producer prices and a large volume of oil stored and carried over to the next crop year. The model estimates how much lower producer prices would likely be in the absence of volume controls.

The Committee estimated the available supply for both classes of oil at 2,108,996 pounds, and that the expected carry-in will be 458,764 pounds. Therefore, with volume control, sales by producers for the 2002–2003 marketing year should be limited to 1,650,232 pounds (the recommended salable quantity for both classes of spearmint oil).

The recommended salable percentages, upon which 2002–2003 producer allotments are based, are 45 percent for Scotch and 38 percent for Native. Without volume controls, producers would not be limited to these allotment levels, and could produce and sell additional spearmint. The econometric model estimated a $1.66 decline in average grower price per pound (from both classes or spearmint oil) resulting from the higher quantities produced and marketed without volume control. Northwest grower prices for both classes of spearmint oil for 1999 and 2000 averaged $9.13, based on National Agricultural Statistics Service data. The severe surplus situation for the spearmint oil market that would exist without volume controls in 2002–2003 would also likely dampen prospects for improved grower prices in future years because of the buildup in stocks.

The use of volume controls allows the industry to fully supply spearmint oil markets while avoiding the negative consequences of over-supplying these markets. The use of volume controls is believed to have little or no effect on consumer prices of products containing spearmint oil and will not result in fewer retail sales of such products.

The Committee discussed alternatives to this rule including higher and lower levels for the salable quantities and allotment percentages for both classes of oil, as well as not regulating the handling of spearmint oil during the 2002–2003 marketing year. The Committee also noted that the operation of the marketing order provides valuable statistical information on domestic and foreign markets to producers and other industry factors.

The Committee discussed and rejected the idea of not regulating Scotch spearmint oil, because of the severe price-depressing effects that would occur without volume control.

The Committee also considered alternative regulation levels for Scotch spearmint oil. The Committee explored maintaining the Scotch spearmint oil allotment percentage at the same level as the current year (48 percent) or increasing the percentage, allowing even more product into the market. These options were discussed at length by the Committee, producers, and handlers in attendance at the meeting. Both options were rejected because current supplies are very abundant and resultant prices are considered too low for general producer viability.

Finally, the Committee discussed recommending a level of regulation as low as a 32.6 percent allotment percentage. As noted earlier, the Committee determined that a drop in the allotment percentage for Scotch spearmint oil from 48 percent during the current year to 32.6 percent would likely be too extreme an adjustment in one marketing year. The Committee opted for a much smaller decline of 3 percentage points, to a salable percentage of 45 percent. The recommended salable quantity is 849,971 pounds.

One Committee member, however, voted against the recommended Scotch spearmint oil salable quantity and allotment percentage in support of a lower level. In consideration of the current, relatively depressed price for Scotch spearmint oil, he felt a more restrictive level of regulation would help to enhance returns to producers.

The general consensus of the individuals commenting during the meeting indicated strong support for a shift in Scotch spearmint oil marketing strategy from one considering primarily the Far West's share of the world market to an approach primarily considering current price, supply, and demand. The Committee's belief that the Scotch spearmint oil market can be improved and stabilized is reflected in its recommendation to establish the salable quantity and allotment percentage at 849,471 pounds and 45 percent, respectively.

The Committee discussed alternative allotment percentage levels for the other class of spearmint oil (Native) ranging from a low of about 35 percent to a high of about 41 percent. With the current price for Native spearmint oil lower than the 20-year average, and demand fairly flat, the Committee, after considerable discussion, determined that 800,761 pounds and 38 percent would be the most effective salable quantity and allotment percentage, respectively, for the 2002–2003 marketing year.

The one dissenting member stated that 38 percent is too great a change from the current season's allotment

percentage of 45 percent, and that demand generally supports more supply than would be released at 38 percent. After a great deal of discussion, the Committee recommended the lower percentage as a means of balancing supplies with market needs. If more supplies are needed during the marketing year, the percentage could be increased.

The Committee's recommendation to establish salable quantities and allotment percentages for both classes of spearmint oil was made after careful consideration of all available information, including: (1) The estimated quantity of salable oil of each class held by producers and handlers; (2) the estimated demand for each class of oil; (3) prospective production of each class of oil; (4) total of allotment bases of each class of oil for the current marketing year and the estimated total of allotment bases of each class for the ensuing marketing year; (5) the quantity of reserve oil, by class, in storage; (6) producer prices of oil, including prices for each class of oil; and (7) general market conditions for each class of oil, including whether the estimated season average price to producers is likely to exceed parity. Based on its review, the Committee believes that the salable quantity and allotment percentage levels recommended would achieve the objectives sought.

Without any regulations in effect, the Committee believes the industry would return to the pronounced cyclical price patterns that occurred prior to the order, and that prices in 2002–2003 would decline substantially below current levels.

As stated earlier, the Committee believes that the order has contributed extensively to the stabilization of producer prices, which prior to 1980 experienced wide fluctuations from year-to-year. National Agricultural Statistics Service records show that the average price paid for both classes of spearmint oil ranged from about $4.00 per pound to about $12.50 per pound during the period between 1968 and 1980. Prices have been consistently more stable since the marketing order's inception in 1980. Excluding the most recent three marketing years, prices since the order's inception have generally stabilized at about $13.00 per pound for Scotch spearmint oil and about $11.00 per pound for Native spearmint oil.

Over the last three years, however, large production and carry-in inventories have contributed to declining prices, despite the Committee's efforts to balance available supplies with demand. Over the last three years, prices have ranged from $8.00 to $11.00 per pound for Scotch spearmint oil and between $9.00 to $10.00 per pound for Native spearmint oil.

According to the Committee, the recommended salable quantities and allotment percentages are expected to achieve the goals of market and price stability, and price improvement.

As stated earlier, annual salable quantities and allotment percentages have been issued for both classes of spearmint oil since the order's inception. Reporting and recordkeeping requirements have remained the same for each year of regulation. These requirements have been approved by the Office of Management and Budget under OMB Control No. 0581–0065. Accordingly, this action would not impose any additional reporting or recordkeeping requirements on either small or large spearmint oil producers and handlers. All reports and forms associated with this program are reviewed periodically in order to avoid unnecessary and duplicative information collection by industry and public sector agencies. The USDA has not identified any relevant Federal rules that duplicate, overlap, or conflict with this proposed rule.

The Committee's meeting was widely publicized throughout the spearmint oil industry and all interested persons were invited to attend and participate on all issues. In addition, interested persons are invited to submit information on the regulatory and informational impacts of this action on small businesses.

A small business guide on complying with fruit, vegetable, and specialty crop marketing agreements and orders may be viewed at: *http://www.ams.usda.gov/fv/moab.html.* Any questions about the compliance guide should be sent to Jay Guerber at the previously mentioned address in the **FOR FURTHER INFORMATION CONTACT** section.

A 15-day comment period is provided to allow interested persons the opportunity to respond to the proposal, including any regulatory and informational impacts of this action on small businesses. Fifteen days is deemed appropriate because this rule would need to be effective as soon as possible to provide producers sufficient time prior to the beginning of the 2002–2003 marketing year to adjust their cultural and marketing plans accordingly. All written comments received within the comment period will be considered before a final determination is made on this matter.

List of Subjects in 7 CFR Part 985

Marketing agreements, Oils and fats, Reporting and recordkeeping requirements, Spearmint oil.

For the reasons set forth in the preamble, 7 CFR part 985 is proposed to be amended as follows:

PART 985—MARKETING ORDER REGULATING THE HANDLING OF SPEARMINT OIL PRODUCED IN THE FAR WEST

1. The authority citation for 7 CFR part 985 continues to read as follows:

Authority: 7 U.S.C. 601–674.

2. A new § 985.221 is added to read as follows:

Note: This section will not appear in the Code of Federal Regulations.

§ 985.221 Salable quantities and allotment percentages—2002–2003 marketing year.

The salable quantity and allotment percentage for each class of spearmint oil during the marketing year beginning on June 1, 2002, shall be as follows:

(a) Class 1 (Scotch) oil—a salable quantity of 849,471 pounds and an allotment percentage of 45 percent.

(b) Class 3 (Native) oil—a salable quantity of 800,761 pounds and an allotment percentage of 38 percent.

Dated: March 5, 2002.

A.J. Yates,

Administrator, Agricultural Marketing Service.

[FR Doc. 02–5686 Filed 3–8–02; 8:45 am]

BILLING CODE 3410–02–P

NUCLEAR REGULATORY COMMISSION

10 CFR Part 60

[Docket No. PRM–60–2 and 60–2A]

The States of Nevada and Minnesota; Denial of Petition for Rulemaking

AGENCY: Nuclear Regulatory Commission.

ACTION: Denial of petition for rulemaking.

SUMMARY: The Nuclear Regulatory Commission (NRC) is denying a petition for rulemaking (PRM–60–2 and 60–2A) submitted by the States of Nevada and Minnesota dealing with disposal of high-level radioactive waste (HLW). In PRM–60–2, the petitioners requested that the NRC adopt a regulation governing the implementation of certain generally applicable environmental standards for HLW that had been proposed by the U.S. Environmental

Protection Agency (EPA) in 1982. Subsequently, in PRM–60–2A, the petitioners amended their original petition after EPA issued final standards in 1985. The amended petition was placed on hold pending completion of certain rulemaking activities, including EPA and NRC development of new HLW disposal standards applicable only to a site at Yucca Mountain, Nevada. The NRC is denying the petition because the NRC considered and partially addressed petitioners' concerns in the development of its site-specific standards for a proposed repository at Yucca Mountain, and amending NRC's generic repository licensing regulations at this time would unnecessarily expend limited Commission resources because there is no current expectation that the generic regulations, in their current form, will be used.

ADDRESSES: Copies of the petition for rulemaking, the public comments received, and the NRC's letter to the petitioners may be examined at the NRC Public Document Room, Room O1F23, located at 11555 Rockville Pike, Rockville, MD.

The NRC maintains an Agencywide Document Access and Management System (ADAMS), which provides text and image files of NRC's public documents. These documents may be accessed through the NRC's Public Electronic Reading Room on the Internet at *http://www.nrc.gov/NRC/ADAMS/index.html.* If you do not have access to ADAMS or if there are problems in accessing the documents located in ADAMS, contact the NRC Public Document Room (PDR) Reference staff at 1–800–397–4209, 301–415–4737, or by e-mail to *pdr@nrc.gov.*

FOR FURTHER INFORMATION CONTACT: Mark Haisfield, telephone (301) 415–6196, e-mail *MFH@nrc.gov* or Timothy McCartin, telephone (301) 415–7285, e-mail *TJM3@nrc.gov* of the Office of Nuclear Material Safety and Safeguards, U.S. Nuclear Regulatory Commission, Washington, DC 20555–0001.

SUPPLEMENTARY INFORMATION:

The Petition

On April 30, 1985 (50 FR 18267), the NRC published a notice of receipt of a petition for rulemaking (PRM–60–2) filed by the States of Nevada and Minnesota (petitioners) on January 21, 1985. The petition requested that the NRC amend its regulations in 10 CFR Part 60 that govern disposal of HLW in geologic repositories. The petitioners requested that NRC amend its regulations to add assurance requirements proposed by the EPA (40 CFR 191.14) in EPA's proposed rule (47 FR 58196; December 29, 1982) to establish generally applicable environmental standards for the management and disposal of spent nuclear fuel, HLW and transuranic wastes. EPA published its final environmental standards on September 19, 1985 (50 FR 38066).[1] The final standards included the assurance requirements of concern to petitioners (e.g., institutional controls and post-permanent closure monitoring), but EPA did not impose these requirements on facilities regulated by the NRC (*see* 40 CFR 191.14 (1985)). The petitioners subsequently filed an amended petition with the NRC on September 30, 1985 (PRM–60–2A) and the NRC published a notice of receipt of the amended petition on December 19, 1985 (50 FR 51701).

The amended petition requested that NRC amend 10 CFR part 60 to: (1) incorporate regulations that are substantively equivalent to EPA's 1985 assurance requirements, and (2) incorporate regulations pertaining to NRC's potential adoption of the Final Environmental Impact Statement (FEIS) to be prepared by the U.S. Department of Energy (DOE) as part of its site recommendation of a potential geologic repository. In the notice of the amended petition, the NRC noted that rulemaking actions currently underway, when finalized, would address the concerns expressed by petitioners (50 FR 51703). The actions included proposed amendments to 10 CFR part 60 to eliminate inconsistencies between NRC's generic regulations and EPA's 1985 standards, and proposed amendments to 10 CFR part 51 on the adoption of DOE's FEIS. Accordingly, the notice advised readers that further consideration of the issues raised by petitioners would be deferred for consideration in these rulemakings. On July 3, 1989 (54 FR 27864), the NRC published a final rule, ''NEPA Review Procedures for Geologic Repositories for High-Level Waste.'' In that rulemaking, the NRC denied the portion of the amended petition proposing specific regulations to govern the process for adopting DOE's FEIS, but considered the concerns raised by petitioners on this issue in the process of formulating the final rule (54 FR 27868).

[1] EPA's final disposal standards at 40 CFR Part 191 were struck down by the U.S. Court of Appeals for the 1st Circuit in *NRDC* v. *EPA,* 824 F.2d 1258 (1st Cir. 1987). However, in 1992, Congress, in the Waste Isolation Pilot Plant Land Withdrawal Act, Public Law 102–579, reinstated the standards for sites other than Yucca Mountain, Nevada, except for those portions that were the specific subject of the judicial remand. The assurance requirements, 40 CFR 191.14, were among the reinstated standards.

Public Comments on the Petition

The notice of receipt of the petition for rulemaking invited interested persons to submit comments. The comment period closed on July 1, 1985, for PRM–60–2, and February 18, 1986, for PRM–60–2A. The NRC received eight comment letters on the petition and the amendment from seven commenters (one commenter provided comments on both PRM–60–2 and 60–2A). There were six comment letters on PRM–60–2 and two comment letters on PRM–60–2A. Of the seven commenters, five were from States and two were from representatives of the nuclear power industry. The State commenters agreed with petitioners that assurance requirements should be included in NRC regulations whereas the industry commenters believed that assurance provisions should be in guidance rather than the regulations.

Intervening Actions

Subsequent to submission of the petitions, two events occurred which substantially altered the legal landscape of the Government's program for the disposal of HLW. These events resulted in the Commission's withdrawal of its proposed amendments to conform 10 CFR part 60 to EPA's 1985 standards (63 FR 66498; December 2, 1998). First, in 1987, Congress amended the Nuclear Waste Policy Act of 1982 (NWPA) in the Nuclear Waste Policy Amendments Act (Public Law 100–203), to provide, among other things, that only the site at Yucca Mountain, Nevada, (YM) would be characterized for possible selection as a geologic repository. Second, in the Energy Policy Act of 1992 (Public Law 102–486), Congress required that EPA issue public health and environmental radiation protection standards that would apply solely to the YM site and that NRC modify its technical requirements and criteria to be consistent with the EPA standards. Pursuant to these statutory changes, the EPA issued its final standards applicable to YM in a new 40 CFR Part 197 on June 13, 2001 (66 FR 32074) and the NRC issued its final conforming requirements in a new 10 CFR part 63—''Disposal of High-Level Radioactive Wastes in a Proposed Geologic Repository at Yucca Mountain, Nevada'' (66 FR 55732; November 2, 2001). In its rulemaking, the NRC also amended 10 CFR part 60 to make it clear that 10 CFR part 60 only applies to the licensing of repositories at sites other than Yucca Mountain.

Denial of the Petition

The NRC is denying the petition, as amended, for the following reasons:

1. The petitioners' concerns were considered in the rulemaking establishing 10 CFR part 63 and the regulations in 10 CFR part 60 no longer apply to a repository at YM. Therefore, the petition, even if granted, would not affect the regulatory regime now in place for the licensing of a potential repository at the YM site.

The NRC has established a new set of regulations applicable specifically and exclusively to a proposed repository at YM in 10 CFR part 63. The issues raised by the petitioners were considered in the course of this rulemaking as explained below. However, the petitioners' requested amendments were specifically directed to the provisions contained in 10 CFR part 60, ''Disposal of High-Level Radioactive Wastes in Geologic Repositories.'' At the time the petition was filed, these regulations were applicable to any potential HLW repository that would be sited, constructed or operated under the NWPA, including one at YM. However, 10 CFR part 60 now has been amended, in light of the statutory changes brought about by the 1987 amendments to the NWPA and by the Energy Policy Act of 1992, to apply to any potential repository *except* one at YM.

2. There is no immediate need for revising 10 CFR part 60 and doing so would unnecessarily expend limited Commission resources.

In the rulemaking to establish separate requirements for a repository at YM, the Commission chose to leave its existing generic requirements intact and in place. The Commission acknowledged that if a need arises to apply the existing generic requirements at 10 CFR part 60, those requirements would need to be revised to account for developments in the capability of technical methods for assessing the performance of a geologic repository. *See* 64 FR 8641, 8643; February 22, 1999. However, the Commission expressed confidence that it would be afforded adequate time and resources in future years to amend its generic regulations for any additional repository site that might be authorized. Should it become necessary to revise these regulations, petitioners would have ample opportunity to suggest amendments. Barring such an eventuality, however, there is no immediate need to amend 10 CFR part 60 and doing so would unnecessarily expend limited Commission resources.

10 CFR Part 63 and the Petition

Although the Commission is denying the petition for the reasons stated above, the Commission considered the substantive issues raised in the petition in the development of NRC's final 10 CFR part 63 rule. A summary of how the petitioners' proposals are addressed in 10 CFR part 63 is provided below:

Post-permanent Closure Monitoring

The petitioners proposed revisions to the regulations that provide further specification to the requirements for the monitoring program to be implemented after the repository has been permanently sealed (*i.e.,* post-permanent closure). Generally, the petitioners requested that post-permanent closure monitoring provide substantive confirmatory information regarding long-term repository performance at the time of license termination, post-permanent closure monitoring will not degrade repository performance, and that minimum requirements for the description of the monitoring program be established in the regulation (*e.g.,* parameters to be monitored and monitoring devices). The Commission's new regulations in 10 CFR part 63 address the petitioners' concerns in the requirements for a performance confirmation program and a program for post-permanent closure monitoring.

Although both the performance confirmation program and the post-permanent closure monitoring program include monitoring, the Commission considers these two programs to be distinctly different because each program addresses very distinct regulatory periods and decisions. The performance confirmation program is conducted up to the time of the decision to permanently close the repository. Thus, the performance confirmation data is used to inform and increase confidence in the Commission's decision on permanent closure of the repository. Objectives and requirements of the performance confirmation program are specified in subpart F of part 63 that are consistent with the petitioners' recommendations (*e.g.,* the performance confirmation program: monitors and evaluates subsurface conditions against design assumptions; confirms natural and engineered barriers are functioning as intended and anticipated; monitors and analyzes changes from the baseline condition of parameters that could affect repository performance; and is conducted in a manner that does not adversely affect repository performance). When DOE files an application to amend the license for permanent closure, it is required, by § 63.51(a)(1), to update its performance assessment of the repository with the performance confirmation data. Consistent with NRC's licensing procedures, this information and associated analyses will be available to all stakeholders.

The program of post-permanent closure monitoring begins after the performance confirmation program ends (*i.e.,* after the time of permanent closure). The program for post-permanent closure monitoring would only occur if the Commission reaches a positive finding on the amendment for permanent closure. If an amendment for permanent closure is granted, it is expected that the performance confirmation program would have provided further information to increase confidence that repository performance is expected to comply with the regulations. Post-permanent closure monitoring is not considered an extension of the confirmation program, but is intended as a more general program expected to monitor a variety of conditions (e.g., land-use controls established under § 63.121(b), safeguards information, and potential release of radionuclides into ground water) to ensure public health and safety is protected. The Commission did not specify details for the post-permanent closure monitoring program in 10 CFR part 63, as was provided for the performance confirmation program. DOE's development and NRC review of the post-permanent closure monitoring program, submitted as part of the license amendment for permanent closure, will benefit from the results of the performance confirmation program (anticipated to extend over tens of years). Therefore, the Commission considers the general requirement for a post-permanent closure monitoring program to be appropriate and additional details are neither necessary nor warranted at this time. As part of a license amendment for permanent closure [§ 63.51(a)(2)], the details of the post-permanent closure monitoring program will be subject to regulatory review and the NRC's licensing process.

Institutional Controls

The petitioners provided additional text for 10 CFR part 60 that would clarify the regulatory approach for institutional controls. First, the petitioners proposed definitions for active and passive institutional controls. The Commission agrees with the concepts for active and passive institutional controls as proposed by the petitioners and has included the essential elements of the petitioner's

definitions in 10 CFR part 63. Specifically, 10 CFR part 63 includes a definition for passive institutional controls (§ 63.302) and provides specific requirements for active institutional controls in the regulation. Active institutional controls are specific actions required during, and beyond, the operational phase of a potential repository that are more appropriate as regulatory requirements rather than as parts of a definition. Specific aspects of the petitioner's proposed definition for ''active institutional control'' are provided in 10 CFR part 63, such as: (1) requirements for ownership and control of interests in land (§ 63.121); (2) program to control and monitor radioactive effluents during operations (§ 63.21); (3) performance confirmation program (Subpart F); and (4) plans for decontamination of surface facilities (§ 63.52). In addition, pursuant to the Energy Policy Act of 1992, DOE is required to provide post-closure oversight to prevent any activity at the site that poses an unreasonable risk of breaching the repository's engineered or geologic barriers or increasing exposures of the public beyond allowable limits. A detailed description of DOE's post-closure oversight program is required at § 63.51(a)(3).

Second, the petitioners requested a new section be added to 10 CFR part 60 clarifying that institutional controls will not assure compliance beyond 100 years after disposal, but that passive institutional controls may be considered in assessing the likelihood and consequences of processes and events affecting the geologic setting. A more restrictive approach for institutional controls has been implemented in EPA's final standards in 40 CFR part 197 and NRC's final standards in 10 CFR part 63 than was proposed in the petition. DOE is not allowed to rely on institutional controls to assure compliance and 10 CFR part 63 does *not* permit passive institutional controls to be considered in assessing the likelihood and consequences of processes and events. Both EPA's approach in 40 CFR part 197 and the Commission's approach in 10 CFR part 63 are based primarily on recommendations by the National Academy of Sciences (NAS).

In 1992, Congress directed EPA, at Section 801 of the Energy Policy Act of 1992, Public Law 102–486 (EnPA), to contract with the NAS to advise EPA on the appropriate technical basis for public health and safety standards governing the Yucca Mountain repository. On August 1, 1995, the NAS published its report entitled ''Technical Bases for Yucca Mountain Standards.'' The EnPA specifically asked the NAS to address the issue of the effectiveness of institutional controls to prevent breaching of the repository's engineered or geologic barriers as a result of human intrusion. The NAS concluded that it was not reasonable to assume that institutional controls will prevent breaching of the repository's barriers. Thus, the NAS recommended a stylized calculation be used to determine whether or not a human intrusion would substantially degrade repository performance as an approach to understand potential impacts to the repository. EPA's final standards in 40 CFR part 197 generally adopted the NAS approach. Consistent with statute, the NRC incorporated the EPA human intrusion standard in 10 CFR part 63. The regulations in 40 CFR part 197 require DOE to determine the earliest time after disposal that the waste package would degrade sufficiently that a stylized human intrusion could occur without recognition by the drillers. DOE must then analyze in a stylized scenario the consequences of a potential intrusion into the repository, whether such intrusion occurs before or after 10,000 years after disposal. EPA noted in the preamble to its final rule (66 FR 32073, at 32104, June 13, 2001) that ''DOE's waste package performance estimates indicate that a waste package would be recognizable to a driller for at least thousands of years.'' The petitioners' recommendation that passive institutional controls could be considered in assessing processes and events affecting the geologic setting is contrary to the NAS determination that it is not possible to make scientifically supportable predictions of the probability that a repository barrier will be breached as a result of human intrusion. Consistent with EPA's standards in 40 CFR part 197, the Commission has not included any provisions for the use of active or passive institutional controls to be used in determining the likelihood of processes and events. EPA's and NRC's final regulations for Yucca Mountain provide further details with regard to the adopted approach to human intrusion (66 FR 32073, at 32104, June 13, 2001; 66 FR 55732, at 55760, November 2, 2001).

Multiple Barriers

The petitioners requested performance requirements for the multiple barrier system of the repository specify that each barrier should be designed or selected so that it complements the others and can significantly compensate for uncertainties about the performance of one or more of the other barriers. The regulations in 10 CFR part 63 require the repository to be comprised of multiple barriers (at least one engineered and one natural) and requires DOE to identify each barrier important to waste isolation, describe each barrier's capability to isolate waste, and provide the technical basis for each barrier's capability. In arriving at this approach, the Commission provided a technical basis in the proposed rule for 10 CFR part 63 (64 FR 8647; February 22, 1999) and considered public comments in the final rule for 10 CFR part 63 (66 FR 55758; November 2, 2001). This approach provides the Commission the information necessary to understand how all components of the repository system work together to ensure that the repository system is robust and not wholly dependent on a single barrier. The petitioners' request to include additional qualifying words such as ''significantly compensate for uncertainties'' are neither necessary nor warranted to ensure the Commission is provided sufficient information to make its regulatory decision.

Siting Criteria

The petitioners requested that the presence of significant concentrations of any naturally occurring material not widely available from other sources be added as a potentially adverse condition to be considered under siting criteria. Siting criteria were provided for in 10 CFR part 60, in part, to provide a basis for comparing different sites. The regulations in 10 CFR part 63 do not contain such criteria because the need for siting criteria was removed when the Nuclear Waste Policy Amendments Act directed DOE to characterize a single site. Therefore, the petitioners' suggestion is not relevant to 10 CFR part 63.

Adoption of the Environmental Impact Statement

This section of the petition was reviewed by the Commission and denied in the NRC's final rule, ''NEPA Review Procedures for Geologic Repositories for High-Level Waste'' (54 FR 27864; July 3, 1989).

For the reasons cited in this document, the NRC denies this petition.

Dated at Rockville, Maryland, this 5th day of March, 2002.

For the Nuclear Regulatory Commission.

Andrew L. Bates,

Acting Secretary of the Commission.

[FR Doc. 02–5763 Filed 3–8–02; 8:45 am]

BILLING CODE 7590–01–P

DEPARTMENT OF TRANSPORTATION

Federal Aviation Administration

14 CFR Part 23

[Docket No. CE173; Notice No. 23–01–05–SC]

Special Conditions: Eclipse Aviation Corporation, Model 500 Airplane; Electronic Engine Control System

AGENCY: Federal Aviation Administration (FAA), DOT.

ACTION: Notice of proposed special conditions.

SUMMARY: This notice proposes special conditions for Eclipse Aviation Corporation, 2503 Clark Carr Loop SE, Albuquerque, NM 87106 on the Eclipse Model 500 airplane. This airplane will have a novel or unusual design feature(s) associated with the use of an electronic engine control system instead of a traditional mechanical control system. The applicable airworthiness regulations do not contain adequate or appropriate safety standards for this design feature. These proposed special conditions contain the additional safety standards that the Administrator considers necessary to establish a level of safety equivalent to that established by the existing airworthiness standards.

DATES: Comments must be received on or before April 10, 2002.

ADDRESSES: Comments on this proposal may be mailed in duplicate to: Federal Aviation Administration, Regional Counsel, Attention: Rules Docket No. CE173, 901 Locust, Room 506, Kansas City, Missouri 64106; or delivered in duplicate to the Regional Counsel at the above address. Comments must be marked: Docket No. CE173. Comments may be inspected in the Rules Docket weekdays, except Federal holidays, between 7:30 a.m. and 4 p.m.

FOR FURTHER INFORMATION CONTACT: Mr. Ervin Dvorak, Federal Aviation Administration, Aircraft Certification Service, Small Airplane Directorate, ACE–111, 901 Locust Street, Kansas City, Missouri, 816–329–4123, fax 816–329–4090.

SUPPLEMENTARY INFORMATION:

Comments Invited

Interested persons are invited to participate in the making of these proposed special conditions by submitting such written data, views, or arguments as they may desire. Communications should identify the regulatory docket or notice number and be submitted in duplicate to the address specified above. All communications received on or before the closing date for comments will be considered by the Administrator. The proposals described in this notice may be changed in light of the comments received. All comments received will be available in the Rules Docket for examination by interested persons, both before and after the closing date for comments. A report summarizing each substantive public contact with FAA personnel concerning this rulemaking will be filed in the docket. Persons wishing the FAA to acknowledge receipt of their comments submitted in response to this notice must include with those comments a self-addressed, stamped postcard on which the following statement is made: ''Comments to Docket No. CE173.'' The postcard will be date stamped and returned to the commenter.

Background

On July 12, 2001, Eclipse Aviation Corporation applied for a type certificate for their Model 500 airplane.

The Eclipse Model 500 airplane design includes digital electronic engine control systems, which were not envisaged and are not adequately addressed in 14 CFR part 23. The applicable existing regulations do not address electronic control systems since those were not envisioned at the time. Even though the engine control system will be certificated as part of the engine, the installation of an engine with an electronic control system requires evaluation due to the possible effects on or by other airplane systems (e.g., radio interference with other airplane electronic systems, shared engine and airplane power sources). The regulatory requirements were not applicable to sysems certificated as part of the engine (ref. § 23.1309(f)(1)). Also, electronic control systems often require inputs from airplane data and power sources and outputs to other airplane systems. Although the parts of the system that are not certificated with the engine could be evaluated using the criteria of § 23.1309, the integral nature of systems such as these makes it unfeasible to evaluate the airplane portion of the system without including the engine portion of the system. However, § 23.1309(f)(1) again prevents complete evaluation of the installed airplane system since evaluation of the engine system's effects is not required.

Type Certification Basis

Under the provisions of 14 CFR § 21.17, Eclipse Aviation Corporation must show that the Eclipse Model 500 airplane meets the following:

(1) Applicable provisions of 14 CFR part 23, effective December 18, 1964, as amended by Amendments 23–1 through 23–54 (September 14, 2000).

(2) Part 34 of the Federal Aviation Regulations effective September 10, 1990, plus any amendments in effect on the date of type certification.

(3) Part 36 of the Federal Aviation Regulations effective December 1, 1969, as amended by Amendment 36–1 through the amendment in effect on the date of type certification.

(4) Noise Control Act of 1972.

(5) Special conditions that are not relevant to these proposed special conditions, if any;

(6) Exemptions, if any;

(7) Equivalent level of safety findings, if any; and

(8) Special conditions adopted by this rulemaking action.

If the Administrator finds that the applicable airworthiness regulations (i.e., part 23) do not contain adequate or appropriate safety standards for the Eclipse Model 500 airplane because of a novel or unusual design feature, special conditions are prescribed under the provisions of § 21.16.

Special conditions, as appropriate, as defined in § 11.19, are issued in accordance with § 11.38 after public notice and become part of the type certification basis in accordance with § 21.17(a)(2).

Special conditions are initially applicable to the model for which they are issued. Should the type certificate for that model be amended later to include any other model that incorporates the same novel or unusual design feature, the special conditions would also apply to the other model under the provisions of § 21.101.

Novel or Unusual Design Features

The Eclipse Model 500 airplane will incorporate the following novel or unusual design features: Digital electronic engine control systems. This notice proposes a special condition for a digital electronic engine control system on the Eclipse Model 500 airplane.

Applicability

As discussed above, these special conditions are applicable to the Eclipse Model 500 airplane. Should Eclipse Aviation Corporation apply at a later date for a change to the type certificate to include another model incorporating the same novel or unusual design feature, the special conditions would apply to that model as well under the provisions of § 21.101.

Conclusion

This action affects only certain novel or unusual design features on one model

of airplanes. It is not a rule of general applicability, and it affects only the applicant who applied to the FAA for approval of these features on the airplane.

List of Subjects in 14 CFR Part 23

Aircraft, Aviation safety, Signs and symbols.

Citation

The authority citation for these special conditions is as follows:

Authority: 49 U.S.C. 106(g), 40113 and 44701; 14 CFR 21.16 and 21.17; and 14 CFR 11.38 and 11.19.

The Proposed Special Conditions

Accordingly, the Federal Aviation Administration (FAA) proposes the following special conditions as part of the type certification basis for the Eclipse Aviation Corporation Model 500, airplane.

1. Electronic Engine Control System

The installation of the electronic engine control system must comply with the requirements of § 23.1309(a) through (e) at Amendment 23–49. The intent of this requirement is not to re-evaluate the inherent hardware reliability of the control itself, but rather determine the effects, including environmental effects addressed in § 23.1309(e), on the airplane systems and engine control system when installing the control on the airplane. When appropriate, engine certification data may be used when showing compliance with this requirement.

Issued in Kansas City, Missouri on February 21, 2002.

Michael Gallagher,

Manager, Small Airplane Directorate, Aircraft Certification Service.

[FR Doc. 02–5811 Filed 3–8–02; 8:45 am]

BILLING CODE 4910–13–U

DEPARTMENT OF TRANSPORTATION

Federal Aviation Administration

14 CFR Part 23

[Docket No. CE166; Notice No. 23–01–03–SC]

Special Conditions: CAP Aviation, Model CAP 222; Structural Design & Loads Criteria

AGENCY: Federal Aviation Administration (FAA), DOT.

ACTION: Notice of proposed special conditions.

SUMMARY: This notice proposes special conditions for the CAP Aviation Model No. 222 airplane. This airplane will have a novel or unusual design feature(s) associated with structural design and loads criteria. The applicable airworthiness regulations do not contain adequate or appropriate safety standards for this design feature. These proposed special conditions contain the additional safety standards that the Administrator considers necessary to establish a level of safety equivalent to that established by the existing airworthiness standards.

DATES: Comments must be received on or before July 9, 2002.

ADDRESSES: Comments on this proposal may be mailed in duplicate to: Federal Aviation Administration, Regional Counsel, ACE–7, Attention: Rules Docket, Docket No. CE166, 901 Locust, Room 506, Kansas City, Missouri 64106, or delivered in duplicate to the Regional Counsel at the above address. Comments must be marked: Docket No. CE166. Comments may be inspected in the Rules Docket weekdays, except Federal holidays, between 7:30 a.m. and 4 p.m.

FOR FURTHER INFORMATION CONTACT: Mr. Mike Reyer, Federal Aviation Administration, Aircraft Certification Service, Small Airplane Directorate, ACE–111, 901 Locust, Kansas City, Missouri, 816–329–4131, fax 816–329–4090.

SUPPLEMENTARY INFORMATION:

Comments Invited

Interested persons are invited to participate in the making of these proposed special conditions by submitting such written data, views, or arguments as they may desire. Communications should identify the regulatory docket or notice number and be submitted in duplicate to the address specified above. All communications received on or before the closing date for comments will be considered by the Administrator. The proposals described in this notice may be changed in light of the comments received. All comments received will be available in the Rules Docket for examination by interested persons, both before and after the closing date for comments. A report summarizing each substantive public contact with FAA personnel concerning this rulemaking will be filed in the docket. Persons wishing the FAA to acknowledge receipt of their comments submitted in response to this notice must include with those comments a self-addressed, stamped postcard on which the following statement is made: ''Comments to CE166.'' The postcard will be date stamped and returned to the commenter.

Background

On January 28, 2001, CAP Aviation applied for a type certificate for their new Model CAP 222. The CAP 222 is a two-place tandem seat, all carbon fiber composite made (wing and fuselage) low wing with no high lift devices. It is a fixed gear, unpressurized MTOW 1,600 pound airplane with aerobatic capabilities from −10g to +10g and a roll rate of 500 degrees per second. A single 200 horsepower Textron-Lycoming AEIO–360–A1E engine and two-bladed MT propeller, type MTV–12–B–C/C–183–17e, comprise the propulsion system.

Since the airplane is designed for high performance acrobatic maneuvers with a design flight envelope of +10g, special conditions are required to address the expanded flight envelope. Current 14 CFR Part 23 acrobatic category design requires that the flight envelope shall not be less than +6.0g, −3.0g.

Type Certification Basis

Under the provisions of 14 CFR § 21.17, § 21.29, and § 21.183(c), CAP Aviation must show that the CAP Model 222 meets the applicable provisions of part 23, as amended by Amendments 23–1 through 23–53; 14 CFR part 36, effective December 1, 1969, including amendments 36–1 through the amendment effective on the date of type certification. In addition, the certification basis includes exemptions, if any, equivalent level of safety findings, if any, and the special conditions adopted by this rulemaking action.

If the Administrator finds that the applicable airworthiness regulations (i.e., part 23) do not contain adequate or appropriate safety standards for the CAP Model 222 because of a novel or unusual design feature, special conditions are prescribed under the provisions of § 21.16.

Special conditions, as appropriate, become part of the type certification basis in accordance with § 21.17(a)(2). Special conditions are initially applicable to the model for which they are issued. Should the type certificate for that model be amended later to include any other model that incorporates the same novel or unusual design feature, the special conditions would also apply to the other model under the provisions of § 21.101(a)(1).

Novel or Unusual Design Features

The CAP Model 222 will incorporate the following novel or unusual design features:

Structural Design and Loads Criteria

An analysis of world championship acrobatic sequences shows a significant number of occurrences of high load factors up to ±10g.

Wing

For airplanes capable of performing ''flick rolls'' (snap rolls), the wing should be designed for 100/0 percent maximum wing load distribution, in addition to the roll maneuver criteria of § 23.349(b), unless lower values can be substantiated. These load conditions are based on a V_A and $C_{r\,max}$ corresponding to the selected positive 10g design load factor. Unbalanced aerodynamic moments about the center of gravity must be reacted in a rational or conservative manner, considering the principal masses furnishing the reacting inertia forces. Furthermore, consideration should be given to the fact that pilots may make significant aileron control input above V_A; therefore, a warning prohibiting unrestricted control system input above V_A should be included in the Pilot Operating Handbook/Airplane Flight Manual (POH/AFM) and on a cockpit placard.

Empennage

For airplanes capable of performing ''flick rolls'' (snap rolls), the empennage should be designed for 100/0 percent maximum load distribution unless lower values can be substantiated. The use of rational flight test results is preferred as a basis for design. Pilots may make significant rudder and elevator controls inputs above V_A, therefore, adequate pilot warnings such as discussed above are necessary.

Rational chord load distributions should be used for the vertical and horizontal tail surfaces. These may be developed by flight test data, wind tunnel test data, theoretical analysis, or a combination thereof.

Gyroscopic Forces

Since the airplane will be performing maneuvers that generate high pitch and yaw rates, the airplane, including the engine, engine mount, and fuselage attachment, must be designed for rational gyroscopic forces generated in specific acrobatic maneuvers.

Fatigue

The fatigue load should be developed from representative sequences and cross country flight profiles.

Applicability

As discussed above, these special conditions are applicable to the Model CAP 222. Should CAP Aviation apply at a later date for a change to the type certificate to include another model incorporating the same novel or unusual design feature, the special conditions would apply to that model as well under the provisions of § 21.101(a)(1).

Conclusion

This action affects only certain novel or unusual design features on the CAP Model 222 airplane. It is not a rule of general applicability, and it affects only the applicant who applied to the FAA for approval of these features on the airplane.

List of Subjects in 14 CFR Part 23

Aircraft, Aviation safety, Signs and symbols.

Citation

The authority citation for these special conditions is as follows:

Authority: 49 U.S.C. 106(g), 40113 and 44701; 14 CFR 21.16 and 21.17; and 14 CFR 11.28 and 11.29(b).

The Proposed Special Conditions

Accordingly, the Federal Aviation Administration (FAA) proposes the following special conditions as part of the type certification basis for CAP Model 222 airplanes.

Structural Design and Loads Criteria

1. *Wing.* For the ''flick roll'' condition in § 23.347(b), a 100/0 percent wing load distribution should be used for wing design. Accurate flight test load measurements may be used in lieu of the 100/0 percent maximum airload distribution. A notation shall be placed in the Limitations Section of the POH/AFM, and an appropriate warning placard shall be installed on the main instrument panel prohibiting full or abrupt control inputs above V_A.

2. *Empennage.* The horizontal tail and its attachments to the fuselage, and the aft fuselage must be designed for the worst case load condition using either accurate flight test load measurements or an acceptable analytical method. Unsymmetrical load combinations acting on the wing and on the horizontal tail are assumed to be turning the airplane in the same direction around the roll axis. A notation shall be placed in the limitation section of the POH/AFM, and an appropriate warning placard shall be installed on the main instrument panel prohibiting full or abrupt control inputs above V_A. Rational chord load distributions should be used for the vertical and horizontal tail surfaces. Appropriate data must be used to develop unsymmetrical loading of the horizontal tail surface and as a basis for fuselage torsion. This must include simultaneous application of full rudder and elevator input.

3. *Gyroscopic Forces.* The airplane, including the engine, engine mount, and fuselage attachment, must be designed for rational gyroscopic forces generated in acrobatic maneuvers.

4. *Fatigue.* Representative acrobatic sequences and cross-country flight profiles must be used in establishing a rational fatigue load spectrum.

Issued in Kansas City, Missouri on February 21, 2002.

Michael Gallagher,

Manager, Small Airplane Directorate, Aircraft Certification Service.

[FR Doc. 02–5812 Filed 3–8–02; 8:45 am]

BILLING CODE 4910–13–U

DEPARTMENT OF TRANSPORTATION

Federal Aviation Administration

14 CFR Part 39

[Docket No. 92–ANE–56–AD]

RIN 2120–AA64

Airworthiness Directives; Textron Lycoming Division, AVCO Corporation Fuel Injected Reciprocating Engines

AGENCY: Federal Aviation Administration, DOT.

ACTION: Notice of proposed rulemaking (NPRM).

SUMMARY: This document proposes the supersedure of an existing airworthiness directive (AD), applicable to certain Textron Lycoming fuel injected reciprocating engines, that currently requires inspection, and replacement if necessary, of externally mounted fuel injector fuel lines. Since the issuance of the existing AD, additional engine series have been identified with the potential for the same problem and necessitate being included in the list of Textron Lycoming fuel injected reciprocating engine series, to the AD's applicability. This proposal is prompted by the need to ensure that the additional Textron Lycoming fuel injected engine series listed in this proposed rule receive the same inspections as series covered by the current AD. The actions specified by the proposed AD are intended to prevent failure of the fuel injector fuel lines allowing fuel to spray into the engine compartment, resulting in an engine fire.

DATES: Comments must be received by May 10, 2002.

ADDRESSES: Submit comments to the Federal Aviation Administration (FAA), New England Region, Office of the Regional Counsel, Attention: Rules

Docket No. 92–ANE–56–AD, 12 New England Executive Park, Burlington, MA 01803–5299. Comments may also be sent via the Internet using the following address: ''*9-ane-adcomment@faa.gov*''. Comments sent via the Internet must contain the docket number in the subject line. Comments may be inspected at this location between 8 a.m. and 4:30 p.m., Monday through Friday, except Federal holidays. The service information referenced in the proposed rule may be obtained from Textron Lycoming, 652 Oliver Street, Williamsport, PA 17701, telephone: (570) 323–6181. This information may be examined at the FAA, New England Region, Office of the Regional Counsel, 12 New England Executive Park, Burlington, MA.

FOR FURTHER INFORMATION CONTACT: Norman Perenson, Aerospace Engineer, New York Aircraft Certification Office, FAA, Engine and Propeller Directorate, 10 Fifth Street, 3rd floor, Valley Stream, NY 11581–1200; telephone: (516) 256–7537, fax: (516) 568–2716.

SUPPLEMENTARY INFORMATION:

Comments Invited

Interested persons are invited to participate in the making of the proposed rule by submitting such written data, views, or arguments as they may desire. Communications should identify the Rules Docket number and be submitted to the address specified above. All communications received on or before the closing date for comments, specified above, will be considered before taking action on the proposed rule. The proposals contained in this action may be changed in light of the comments received.

Comments are specifically invited on the overall regulatory, economic, environmental, and energy aspects of the proposed rule. All comments submitted will be available, both before and after the closing date for comments, in the Rules Docket for examination by interested persons. A report summarizing each FAA-public contact concerned with the substance of this proposal will be filed in the Rules Docket.

Commenters wishing the FAA to acknowledge receipt of their comments submitted in response to this action must submit a self-addressed, stamped postcard on which the following statement is made: ''Comments to Docket Number 92–ANE–56–AD.'' The postcard will be date stamped and returned to the commenter.

Availability of NPRM's

Any person may obtain a copy of this NPRM by submitting a request to the FAA, New England Region, Office of the Regional Counsel, Attention: Rules Docket No. 92–ANE–56–AD, 12 New England Executive Park, Burlington, MA 01803–5299.

Discussion

On June 5, 1992, the FAA issued a priority letter AD 92–12–10, applicable only to Textron Lycoming Series TIO–540–S1AD engines, which requires inspecting, and if necessary, replacing the externally mounted fuel injector fuel lines. The FAA subsequently determined that similar externally mounted fuel injector fuel line configurations existed on other Textron Lycoming fuel injected engines. Since an unsafe condition was identified that was likely to exist or develop on other Textron Lycoming engines of the same type design, the FAA issued AD 93–02–05, Amendment 39–8487 (58 FR 26056, dated April 30, 1993), to require inspecting, and if necessary replacing, the fuel injector fuel lines. That action was prompted by reports of failures of fuel injector fuel lines that were missing support clamps. The requirements of that AD were intended to prevent failure of the fuel injector fuel lines allowing fuel to spray into the engine compartment, resulting in an engine fire.

Since that AD was issued, the FAA has identified models AEIO–320, AIO–320, IO–320, LIO–320, AEIO–360, AIO–360, HIO–360, IO–360, IVO–360, LIO–360, TIO–360, IGO–480, AEIO–540, IGO–540, IO–540, IVO–540, LTIO–540, TIO–540, TIVO–540, and IO–720 series engines that require inspecting, and if necessary replacing externally mounted fuel lines.

Service Information

The FAA has reviewed and approved the technical contents of Textron Lycoming Mandatory Service Bulletin (MSB) No. 342D, dated July 10, 2001, that describes procedures for inspecting, and if necessary replacing the fuel injector fuel lines. Textron Lycoming MSB No. 342D supersedes Textron Lycoming MSB No. 342C, MSB No. 342B, Supplement No. 1 to MSB 342B, MSB 342A, and MSB 342.

Proposed Actions

Since an unsafe condition has been identified that is likely to exist or develop on other Textron Lycoming engines of this same type design, the proposed AD would supersede AD 93–02–05 to add additional Textron Lycoming engine models to the applicability of the AD. The actions would be required to be done in accordance with the service bulletin described previously.

Economic Analysis

There are about 4,160 engines of the affected design in the worldwide fleet. The FAA estimates that 2,496 engines installed on aircraft of U.S. registry would be affected by this proposed AD, that it would take about 1 work hour to inspect and replace all lines on a four-cylinder engine, 1.5 work hours to inspect and replace all lines on a six-cylinder engine, and 2 hours to inspect and replace all lines on an eight-cylinder engine, and that the average labor rate is $60 per work hour. Required parts would cost about $440.00 for a four-cylinder engine, $660.00 for a six-cylinder engine, and $880.00 for an eight-cylinder engine. Based on these figures, the total cost per airplane of the proposed AD on U.S. operators is estimated as follows:

- $500.00 for a four-cylinder engine.
- $750.00 for a six-cylinder engine.
- $1000.00 for an eight-cylinder engine.

Regulatory Analysis

This proposal does not have federalism implications, as defined in Executive Order 13132, because it would not have a substantial direct effect on the States, on the relationship between the national government and the States, or on the distribution of power and responsibilities among the various levels of government. Accordingly, the FAA has not consulted with state authorities prior to publication of this proposal.

For the reasons discussed above, I certify that this proposed regulation (1) is not a ''significant regulatory action'' under Executive Order 12866; (2) is not a ''significant rule'' under the DOT Regulatory Policies and Procedures (44 FR 11034, February 26, 1979); and (3) if promulgated, will not have a significant economic impact, positive or negative, on a substantial number of small entities under the criteria of the Regulatory Flexibility Act. A copy of the draft regulatory evaluation prepared for this action is contained in the Rules Docket. A copy of it may be obtained by contacting the Rules Docket at the location provided under the caption **ADDRESSES.**

List of Subjects in 14 CFR Part 39

Air transportation, Aircraft, Aviation safety, Safety.

The Proposed Amendment

Accordingly, pursuant to the authority delegated to me by the Administrator, the Federal Aviation

Administration proposes to amend part 39 of the Federal Aviation Regulations (14 CFR part 39) as follows:

PART 39—AIRWORTHINESS DIRECTIVES

1. The authority citation for part 39 continues to read as follows:

Authority: 49 U.S.C. 106(g), 40113, 44701.

§ 39.13 [Amended]

2. Section 39.13 is amended by removing Amendment 39–8487 (58 26056, April 30, 1993), and by adding a new airworthiness directive, to read as follows:

Textron Lycoming Division, AVCO Corporation Docket No. 92–ANE–56–AD. Supersedes AD 93–02–05, Amendment 39–8487.

Applicability

Textron Lycoming fuel injected reciprocating engines incorporating externally mounted fuel injection lines as listed in the following Table 1:

TABLE 1.—ENGINE MODELS AFFECTED

Engine	Model
AEIO–320	–D1B, –D2B, –E1B, –E2B
AIO–320 ..	–A1B, –BIB, –C1B
IO–320	–B1A, –B1C, –C1A, –D1A, –D1B, –E1A, –E1B, –E2A, –E2B
LIO–320 ...	–B1A, –C1A
AEIO–360	–A1A, –A1B, –A1B6, –A1D, –A1E, –A1E6, –B1F, –B2F, –B1G6, –B4A, –H1A, –H1B
AIO–360 –A1A, –A1B, –B1B.	
HIO–360 ..	–A1A, –A1B, –B1A, –C1A, –C1B, –D1A, –E1AD, E1BD, –F1AD
IO–360	–A1A, –A1B, –A1B6, –A1B6D, –A1C, –A1D, –A1D6, –A2A, –A2B, –A3B6, –A3B6D, –B1B, –B1D, –B1E, –B1F, –B1G6, –B2F, –B2F6, –B4A, –C1A, –C1B, –C1C, –C1C6, –C1D6, –C1E6, –C1F, –C1G6, –C2G6, –J1A6D, –L2A, –M1A,
IVO–360 ..	–A1A
LIO–360 ...	–C1E6
TIO–360 ..	–A1B, –C1A6D
IGO–480 ..	–A1B6
AEIO–540	–D4A5, –D4B5, –D4D5, –L1B5, –L1B5D, –L1D5
IGO–540 ..	–B1A, –B1C

TABLE 1.—ENGINE MODELS AFFECTED—Continued

Engine	Model
IO–540	–A1A5, –AA1A5, –AA1B5, –AB1A5, –AC1A5, –B1A5, –B1C5, –C1B5, –C4B5, –C4D5D, –D4A5, –E1A5, –E1B5, –G1A5, –G1B5, –G1C5, –G1D5, –G1E5, –G1F5, –J4A5, –V4A5D, –K1A5, –KIA5D, –KIB5, –KIC5, –KID5, –K1E5, –K1E5D, –KIF5, –K1J5, –KIF5D, –K1G5, –K1G5D, –K1H5, –K1J5D, –K1K5, –K1E5, –K1E5D, –K1F5, –K1J5, –L1C5, –M1A5, –M1B5D, –N1A5, –P1A5, –R1A5, –S1A5, –T4A5D, –T4B5, –T4B5D, –T4C5D, –V4A5, –V4A5D, –W1A5D, –W3A5D
IVO–540 ..	–A1A
LTIO–540	–F2BD, –J2B, –J2BD, –N2BD, –R2AD, –U2A, –V2AD, –W2A
TIO–540 ..	–A1A, –A1B, –A2A, –A2B, –A2C, –AE2A, –AH1A, –AA1AD, –AF1A, –AF1B, –AG1A, –AB1AD, –AB1BD, –AH1A, –AJ1A, –AK1A, –C1A, –E1A, –G1A, –F2BD, –J2B, –J2BD, –N2BD, –R2AD, –S1AD, –U2A, –V2AD, –W2A
TIVO–540	–A2A
IO–720	–A1A, –A1B, –D1B, –D1BD, –D1C, –D1CD, –B1B, –B1BD, –C1B

Engine models in Table 1 are installed on, but not limited to Piper PA–24 Comanche, PA–30 and PA–39 Twin Comanche, PA–28 Arrow, and PA–23 Aztec; Beech 23 Musketeer; Mooney 20, and Cessna 177 Cardinal aircraft.

Note 1: This AD is applicable to engines with an ''I'' in the prefix of the model designation that have externally mounted fuel injection lines. This AD is not applicable to engines having internally mounted fuel injection lines, which are not accessible.

Note 2: This airworthiness directive (AD) applies to each engine identified in the preceding applicability provision, regardless of whether it has been modified, altered, or repaired in the area subject to the requirements of this AD. For engines that have been modified, altered, or repaired so that the performance of the requirements of this AD is affected, the owner/operator must request approval for an alternative method of compliance in accordance with paragraph (d) of this AD. The request should include an assessment of the effect of the modification, alteration, or repair on the unsafe condition addressed by this AD; and, if the unsafe condition has not been eliminated, the request should include specific proposed actions to address it.

Compliance

Required as indicated, unless already done.

To prevent failure of the fuel injector fuel lines allowing fuel to spray into the engine compartment, resulting in an engine fire, do the following:

Engines That Have Been Previously Inspected

(a) For engines that have been inspected in accordance with Textron Lycoming Mandatory Service Bulletin (MSB) No. 342, Textron Lycoming MSB No. 342A, Textron Lycoming MSB No. 342B, Supplement No. 1 to MSB No. 342B, and Textron Lycoming MSB No. 342C, inspect in accordance with paragraph (c) of this AD.

Engines That Have Not Been Inspected

(b) For engines that have not had initial inspections previously done in accordance with Textron Lycoming MSB No. 342, Textron Lycoming MSB No. 342A, Textron Lycoming MSB No. 342B, Supplement No. 1 to MSB No. 342B, and Textron Lycoming MSB No. 342C, inspect in accordance with Textron Lycoming MSB No. 342D, dated July 10, 2001 as follows:

(1) For engines that have not yet had any fuel line maintenance done, or have not had any fuel line maintenance done since the last overhaul, inspect within 50 hours time-in-service after the effective date of this AD, and replace as necessary, the fuel injector fuel lines and clamps between the fuel manifold and the fuel injector nozzles that do not meet all conditions specified in Textron Lycoming MSB No. 342D, dated July 10, 2001.

(2) For all other engines, inspect within 10 hours time-in-service after the effective date of this AD, and replace as necessary, the fuel injector fuel lines and clamps between the fuel manifold and the fuel injector nozzles that do not meet all conditions specified in Textron Lycoming MSB No. 342D, dated July 10, 2001.

Repetitive Inspections

(c) Thereafter, at each annual inspection, at each 100-hour inspection, at each engine overhaul, and after any maintenance has been done on the engine where the fuel injector fuel lines have been disconnected, moved, or loosened, inspect the fuel injector fuel lines and clamps and replace as necessary any fuel injector fuel line and clamp that does not meet all conditions specified in Textron Lycoming MSB No. 342D, dated July 10, 2001.

Alternative Methods of Compliance

(d) An alternative method of compliance or adjustment of the compliance time that provides an acceptable level of safety may be used if approved by the Manager, New York Aircraft Certification Office (ACO). Operators must submit their request through an appropriate FAA Principal Maintenance Inspector, who may add comments and then send it to the Manager, New York ACO.

Note 3: Information concerning the existence of approved alternative methods of compliance with this airworthiness directive, if any, may be obtained from the New York ACO.

Special Flight Permits

(e) Special flight permits may be issued in accordance with §§ 21.197 and 21.199 of the Federal Aviation Regulations (14 CFR 21.197

and 21.199) to operate the aircraft to a location where the requirements of this AD can be done.

Issued in Burlington, Massachusetts, on March 1, 2002.

Mark C. Fulmer,

Acting Manager, Engine and Propeller Directorate, Aircraft Certification Service.

[FR Doc. 02–5691 Filed 3–8–02; 8:45 am]

BILLING CODE 4910–13–U

DEPARTMENT OF TRANSPORTATION

Federal Aviation Administration

14 CFR Part 39

[Docket No. 2002–CE–03–AD]

RIN 2120–AA64

Airworthiness Directives; Air Tractor, Inc. Model AT–602 Airplanes

AGENCY: Federal Aviation Administration, DOT.

ACTION: Notice of proposed rulemaking (NPRM).

SUMMARY: This document proposes to adopt a new airworthiness directive (AD) that would apply to certain Air Tractor, Inc. (Air Tractor) Model AT–602 airplanes. This proposed AD would require you to repetitively inspect the left hand upper longeron and upper diagonal tube of the fuselage frame for cracks and repair any cracks found. This proposed AD would also require eventual modification of this area to terminate the repetitive inspection. This proposed AD is the result of reports of excessive movement in the empennage due to the loss of fuselage torsional rigidity. The actions specified by this proposed AD are intended to prevent failure of the fuselage caused by cracks. Such failure could result in loss of control of the airplane.

DATES: The Federal Aviation Administration (FAA) must receive any comments on this proposed rule on or before May 10, 2002.

ADDRESSES: Submit comments to FAA, Central Region, Office of the Regional Counsel, Attention: Rules Docket No. 2002–CE–03–AD, 901 Locust, Room 506, Kansas City, Missouri 64106. You may view any comments at this location between 8 a.m. and 4 p.m., Monday through Friday, except Federal holidays. You may also send comments electronically to the following address: *9–ACE–7–Docket@faa.gov.* Comments sent electronically must contain ''Docket No. 2002–CE–03–AD'' in the subject line. If you send comments electronically as attached electronic files, the files must be formatted in Microsoft Work 97 for Windows or ASCII text.

You may get service information that applies to this proposed AD from Air Tractor, Incorporated, P.O. Box 485, Olney, Texas 76374. You may also view this information at the Rules Docket at the address above.

FOR FURTHER INFORMATION CONTACT: Andrew D. McAnaul, Aerospace Engineer, FAA, Fort Worth Airplane Certification Office, 2601 Meacham Boulevard, Fort Worth, Texas 76193–0150; telephone: (817) 222–5156; facsimile: (817) 222–5960.

SUPPLEMENTARY INFORMATION:

Comments Invited

How Do I Comment on This Proposed AD?

The FAA invites comments on this proposed rule. You may submit whatever written data, views, or arguments you choose. You need to include the rule's docket number and submit your comments to the address specified under the caption **ADDRESSES.** We will consider all comments received on or before the closing date. We may amend this proposed rule in light of comments received. Factual information that supports your ideas and suggestions is extremely helpful in evaluating the effectiveness of this proposed AD action and determining whether we need to take additional rulemaking action.

Are There Any Specific Portions of This Proposed AD I Should Pay Attention to?

The FAA specifically invites comments on the overall regulatory, economic, environmental, and energy aspects of this proposed rule that might suggest a need to modify the rule. You may view all comments we receive before and after the closing date of the rule in the Rules Docket. We will file a report in the Rules Docket that summarizes each contact we have with the public that concerns the substantive parts of this proposed AD.

How Can I Be Sure FAA Receives My Comment?

If you want FAA to acknowledge the receipt of your comments, you must include a self-addressed, stamped postcard. On the postcard, write ''Comments to Docket No. 2002–CE–03–AD.'' We will date stamp and mail the postcard back to you.

Discussion

What Events Have Caused This Proposed AD?

The FAA has received reports of three occurrences where cracks were found on the left hand upper longeron and upper diagonal support tubes intersect on the left hand side of the fuselage frame just forward of the vertical fin front spar attachment point on Model AT–602 airplanes. The crack starts at the forward edge of the weld where the tubes come together. We have determined that the cracks are a result of high vertical tail loads during repeated hard turns. The cracks were found by the pilot and/or ground crew when they noticed excessive movement in the empennage due to the loss of torsional rigidity.

What Are the Consequences if the Condition Is Not Corrected?

This condition, if not corrected, could cause the fuselage to fail. Such failure could result in loss of control of the airplane.

Is There Service Information That Applies to This Subject?

Air Tractor has issued the following:

—Snow Engineering Co. Service Letter #195, dated February 4, 2000;
—Snow Engineering Co. Service Letter #213, dated November 13, 2001;
—Snow Engineering Co. Process Specification #102, Revised January 5, 2001;
—Snow Engineering Co. Process Specification #120, Revised December 16, 1997; and
—Snow Engineering Co. Process Specification #125, dated November 28, 1993.

What Are the Provisions of This Service Information?

These service bulletins include procedures for:

—Repetitively inspecting the upper longeron and upper diagonal tube on the left hand side of the aft fuselage structure for cracks; and
—Modifying this area by installing reinforcement parts.

The FAA's Determination and an Explanation of the Provisions of This Proposed AD

What Has FAA Decided?

After examining the circumstances and reviewing all available information related to the incidents described above, we have determined that:

—The unsafe condition referenced in this document exists or could develop on other Air Tractor Model AT–602 airplanes of the same type design;
—The actions specified in the previously-referenced service information should be accomplished on the affected airplanes; and
—AD action should be taken in order to correct this unsafe condition.

What Would This Proposed AD Require?

This proposed AD would require you to repetitively inspect the upper longeron and upper diagonal tube on the left hand side of the aft fuselage structure for cracks, repair any cracks found, and modifying this area by installing reinforcement parts.

Why Are the Air Tractor AT–400, AT–500, and AT–800 Series Airplanes Not Included in This Proposed AD?

The Air Tractor AT–400, AT–500, and AT–800 series airplanes have a similar design in the upper longeron in the aft fuselage structure. However, we have not received any reports of damage to this area on those airplanes. The only reports of damage are those previously referenced on the Model AT–602 airplanes.

Air Tractor is currently researching this subject on the AT–400, AT–500, and AT–800 series airplanes. Based on this research and if justified, we may propose additional rulemaking on this subject for these other airplanes.

Cost Impact

How Many Airplanes Would This Proposed AD Impact?

We estimate that this proposed AD affects 91 airplanes in the U.S. registry.

What Would Be the Cost Impact of This Proposed AD on Owners/Operators of the Affected Airplanes?

We estimate the following costs to accomplish the proposed inspection(s):

Labor cost	Parts cost	Total cost per airplane	Total cost on U.S. operators
1 workhour × $60 = $60	No parts required	$60	$60 × 91 = $5,460

We estimate the following costs to accomplish the proposed modification:

Labor cost	Parts cost	Total cost per airplane
8 workhours × $60 = $480	Manufacturer will provide parts at no charge	$480

Regulatory Impact

Would This Proposed AD Impact Various Entities?

The regulations proposed herein would not have a substantial direct effect on the States, on the relationship between the national government and the States, or on the distribution of power and responsibilities among the various levels of government. Therefore, it is determined that this proposed rule would not have federalism implications under Executive Order 13132.

Would This Proposed AD Involve a Significant Rule or Regulatory Action?

For the reasons discussed above, I certify that this proposed action (1) is not a ''significant regulatory action'' under Executive Order 12866; (2) is not a ''significant rule'' under DOT Regulatory Policies and Procedures (44 FR 11034, February 26, 1979); and (3) if promulgated, will not have a significant economic impact, positive or negative, on a substantial number of small entities under the criteria of the Regulatory Flexibility Act. A copy of the draft regulatory evaluation prepared for this action has been placed in the Rules Docket. A copy of it may be obtained by contacting the Rules Docket at the location provided under the caption **ADDRESSES**.

List of Subjects in 14 CFR Part 39

Air transportation, Aircraft, Aviation safety, Safety.

The Proposed Amendment

Accordingly, under the authority delegated to me by the Administrator, the Federal Aviation Administration proposes to amend part 39 of the Federal Aviation Regulations (14 CFR part 39) as follows:

PART 39—AIRWORTHINESS DIRECTIVES

1. The authority citation for part 39 continues to read as follows:

Authority: 49 U.S.C. 106(g), 40113, 44701.

§ 39.13 [Amended]

2. FAA amends § 39.13 by adding a new airworthiness directive (AD) to read as follows:

Air Tractor, Inc.: Docket No. 2002–CE–03–AD.

(a) *What airplanes are affected by this AD?* This AD affects Model AT–602 airplanes, serial numbers 602–0337 through 602–0569, that are certificated in any category.

(b) *Who must comply with this AD?* Anyone who wishes to operate any of the airplanes identified in paragraph (a) of this AD must comply with this AD.

(c) *What problem does this AD address?* The actions specified by this AD are intended to prevent failure of the empennage caused by cracks. Such failure could result in loss of control of the airplane.

(d) What actions must I accomplish to address this problem? To address this problem, you must accomplish the following:

Actions	Compliance	Procedures
(1) Inspect the upper longeron and upper diagonal tube on the left hand side of the fuselage frame, just forward of the vertical fin front spar attachment, for cracks.	Initially inspect within the next 50 hours time-in-service (TIS) after the effective date of this AD and thereafter at intervals not to exceed 100 hours TIS until 12 months after the effective date of this AD.	In accordance with Snow Engineering Co. Service Letter #195, dated February 4, 2000, and applicable maintenance manual.

Actions	Compliance	Procedures
(2) If cracks are found during any inspection required in paragraph (d)(1) of this AD, accomplish the following:. (i) Obtain a repair scheme from the manufacturer through the FAA at the address specified in paragraph (f) of this AD; and (ii) Incorporate this repair scheme	Prior to further flight after the inspection in which the cracks are found. The incorporation of the repair scheme will terminate the repetitive inspections.	In accordance with the repair scheme obtained from Air Tractor, Incorporated, P.O. Box 485, Olney, Texas 76374. Obtain this repair scheme through the FAA at the address specified in paragraph (f) of this AD.
(3) If no cracks were found during any inspection required in paragraph (d)(1) of this AD, accomplish the following:. (i) Inspect as required in paragraph (d)(1) to ensure there are no cracks; and (ii) Install gusset part numbers 11946–1 and 11686–1 (or FAA-approved equivalent part numbers)	Within the next 12 calendar months after the effective date of this AD. You may install the reinforcement gussets at any time to terminate the repetitive inspections provided that you inspect prior to installation and no cracks are found.	In accordance with Snow Engineering Co. Service Letter #213, dated November 13, 2001, Snow Engineering Co. Process Specification #102, revised January 5, 2001, Snow Engineering Co. Process Specification #120, revised December 16, 1997, and Snow Engineering Co. Process Specification #125, dated November 28, 1993, as specified in Service Letter #213, and the applicable maintenance manual.

(e) *Can I comply with this AD in any other way?* You may use an alternative method of compliance or adjust the compliance time if:

(1) Your alternative method of compliance provides an equivalent level of safety; and

(2) The Manager, Fort Worth Aircraft Certification Office (ACO), approves your alternative. Submit your request through an FAA Principal Maintenance Inspector, who may add comments and then send it to the Manager, Fort Worth ACO.

Note: This AD applies to each airplane identified in paragraph (a) of this AD, regardless of whether it has been modified, altered, or repaired in the area subject to the requirements of this AD. For airplanes that have been modified, altered, or repaired so that the performance of the requirements of this AD is affected, the owner/operator must request approval for an alternative method of compliance in accordance with paragraph (e) of this AD. The request should include an assessment of the effect of the modification, alteration, or repair on the unsafe condition addressed by this AD; and, if you have not eliminated the unsafe condition, specific actions you propose to address it.

(f) *Where can I get information about any already-approved alternative methods of compliance?* Contact Andrew D. McAnaul, Aerospace Engineer, FAA, Fort Worth Airplane Certification Office, 2601 Meacham Boulevard, Fort Worth, Texas 76193–0150; telephone: (817) 222–5156; facsimile: (817) 222–5960.

(g) *What if I need to fly the airplane to another location to comply with this AD?* The FAA can issue a special flight permit under sections 21.197 and 21.199 of the Federal Aviation Regulations (14 CFR 21.197 and 21.199) to operate your airplane to a location where you can accomplish the requirements of this AD.

(h) *How do I get copies of the documents referenced in this AD?* You may get copies of the documents referenced in this AD from Air Tractor, Incorporated, P.O. Box 485, Olney, Texas 76374. You may view these documents at FAA, Central Region, Office of the Regional Counsel, 901 Locust, Room 506, Kansas City, Missouri 64106.

Issued in Kansas City, Missouri, on March 4, 2002.

James E. Jackson,

Acting Manager, Small Airplane Directorate, Aircraft Certification Service.

[FR Doc. 02–5690 Filed 3–8–02; 8:45 am]

BILLING CODE 4910–13–U

DEPARTMENT OF TRANSPORTATION

Federal Aviation Administration

14 CFR Part 71

[Airspace Docket No. 01–ANM–17]

Proposed Modification of Class E Airspace, Newport, OR

AGENCY: Federal Aviation Administration (FAA), DOT.

ACTION: Notice of proposed rulemaking (NPRM).

SUMMARY: This action proposes to modify existing Class E airspace at Newport, OR. Newly developed Area Navigation (RNAV) Special Standard Instrument Approach Procedure (SIAP) and the certification of new weather reporting equipment at the Newport Municipal Airport has made this proposal necessary. Additional Class E 700-feet and 1,200-feet controlled airspace, above the surface of the earth is required to contain aircraft executing the RNAV RWY 16 Global Positioning System (GPS) SIAP at Newport Municipal Airport. Newport Municipal Airport currently has part-time Class E–2 airspace due to the lack of weather reporting. New weather reporting equipment has been installed and certified, therefore, this proposal also changes the Class E–2 Airspace at Newport, OR, to 24-hour operation. The intended effect of this action is to provide adequate Class E controlled airspace between the terminal and the en route phase of flight for aircraft executing Instrument Flight Rules (IFR) operations at Newport Municipal Airport, Newport, OR.

DATES: Comments must be received on or before April 25, 2002.

ADDRESSES: Send comments on the proposal in triplicate to: Manager, Airspace Branch, ANM–520, Federal Aviation Administration, Docket No. 01–ANM–17, 1601 Lind Avenue SW, Renton, Washington 98055–4056.

An informal docket may also be examined during normal business hours in the office of the Manager, Air Traffic Division, Airspace Branch, at the address listed above.

FOR FURTHER INFORMATION CONTACT: Brian Durham, ANM–520.7, Federal Aviation Administration, Docket No. 01–ANM–17, 1601 Lind Avenue SW., Renton, Washington 98055–4056: telephone number: (425) 227–2527.

SUPPLEMENTARY INFORMATION:

Comments Invited

Interested parties are invited to participate in this proposed rulemaking by submitting such written data, views, or arguments, as they may desire. Comments that provide the factual basis supporting the views and suggestions presented are particularly helpful in developing reasoned regulatory decisions on the proposal. Comments are specifically invited on the overall regulatory, aeronautical, economic, environmental, and energy related aspects of the proposal. Communications should identify the airspace docket number and be submitted in triplicate to the address listed above. Commenters wishing the FAA to acknowledge receipt of their comments on this action must submit, with those comments, a self-addressed

stamped postcard on which the following statement is made: ''Comments to Airspace Docket No. 01–ANM–17.'' The postcard will be date/time stamped and returned to the commenter. All communications received on or before the specified closing date for comments will be considered before taking action on the proposed rule. The proposal contained in this action may be changed in the light of comments received. All comments submitted will be available for examination at the address listed above both before and after the closing date for comments. A report summarizing each substantive public contact with FAA personnel concerned with this rulemaking will be filed in the docket.

Availability of NPRM's

Any person may obtain a copy of this NPRM by submitting a request to the Federal Aviation Administration, Airspace Branch, ANM–520, 1601 Lind Avenue SW, Renton, Washington 98055–4056. Communications must identify the docket number of this NPRM. Persons interested in being placed on a mailing list for future NPRM's should also request a copy of Advisory Circular No. 11–2A, which describes the application procedure.

The Proposal

The FAA is considering an amendment to Title 14 Code of Federal Regulations, part 71 (14 CFR part 71) by modifying existing Class E airspace at Newport, OR. Newly developed RNAV RWY 16 SIAP at the Newport Municipal Airport and newly installed 24-hour weather reporting equipment has made this proposal necessary. Additional Class E 700-feet and E 1,200-feet controlled airspace, above the surface of the earth is required to contain aircraft executing the Instrument Flight Rules (IFR) operations, at Newport Municipal Airport. Newport Municipal Airport currently has part-time Class E–2 airspace due to the lack of weather reporting. New weather reporting equipment has been installed and certified; therefore, this proposal also changes the Class E–2 Airspace at Newport, OR, to a 24-hour operation. The FAA establishes Class E airspace where necessary to contain aircraft transitioning between the terminal and en route environments. The intended effect of this proposal is designed to provide for the safe and efficient use of the navigable airspace. This proposal would promote safe flight operations under IFR at the Newport Municipal Airport and between the terminal and en route transition stages.

The area would be depicted on aeronautical charts for pilot reference. The coordinates for this airspace docket are based on North American Datum 83. Class E airspace designated as surface area for an airport, are published in Paragraph 6002; Class E airspace areas extending upward from 700-feet or move above the surface of the earth, are published in Paragraph 6005, of FAA Order 7400.9J, dated August 31, 2001, and effective September 16, 2001, which is incorporated by reference in 14 CFR 71.1. The Class E airspace designations listed in this document will be published subsequently in the Order.

The FAA has determined that this proposed regulation only involves an established body of technical regulations for which frequent and routine amendments are necessary to keep them operationally current. It, therefore, (1) is not a ''significant regulatory action'' under Executive Order 12866; (2) is not a ''significant rule'' under DOT Regulatory Policies and Procedures (44 FR 11013; February 26, 1979); and (3) does not warrant preparation of a Regulatory Evaluation as the anticipated impact is so minimal. Since this is a routine matter that will only affect air traffic procedures and air navigation, it is certified that this rule, when promulgated, will not have a significant economic impact on a substantial number of small entities under the criteria of the Regulatory Flexibility Act.

List of Subjects in 14 CFR Part 71

Airspace, Incorporation by reference, Navigation (air).

The Proposed Amendment

In consideration of the foregoing, the Federal Aviation Administration proposes to amend 14 CFR part 71 as follows:

PART 71–DESIGNATION OF CLASS A, CLASS B, CLASS C, CLASS D, AND CLASS E AIRSPACE AREAS; AIRWAYS; ROUTES; AND REPORTING POINTS

1. The authority citation for 14 CFR part 71 continues to read as follows:

Authority: 49 U.S.C. 106(g), 40103, 40113, 40120; E.O. 10854, 24 FR 9565, 3 CFR, 1959–1963 Comp., p. 389.

§ 71.1 [Amended]

2. The incorporation by reference in 14 CFR 71.1 of the Federal Aviation Administration Order 7400.9J, Airspace Designations and Reporting Points, dated August 31, 2001, and effective September 16, 2001, is amended as follows:

Paragraph 6002 Class E airspace designated as surface area for an airport.

* * * * *

ANM OR E2 Newport, OR [Revised]

Newport Municipal Airport, OR
(Lat. 44°34′49″ N, long. 124°03′28″ W.)
Newport VORTAC
(Lat. 44°34′31″ N, long. 124°03′38″ W.)

Within a 4-mile radius of the Newport Municipial Airport, and within 3.5 miles each side of the Newport VORTAC 357° radial extending from the 4-mile radius to 7.9 miles north of the VORTAC.

* * * * *

Paragraph 6005 Class E airspace areas extending upward from 700-feet or more above the surface of the earth.

* * * * *

ANM OR E5 Newport, or [Revised]

Newport Municipal Airport, OR
(Lat. 44°34′49″ N, long. 124°03′28″ W.)
Newport VORTAC
(Lat. 44°34′31″ N, long. 124°03′38″ W.)

That airspace extending upward from 700-feet above the surface within a 5.5 mile radius of Newport Municipal Airport, and within 3.5 miles each side of the 005° bearing from the Newport VORTAC extending from the 5.5 mile radius to 8.7 miles north of the VORTAC, and within 2 miles each side of the Newport VORTAC 044° radial extending from the 5.5 mile radius to 11.4 miles northeast of the VORTAC, and within 3 miles each side of the Newport VORTAC 341° radial extending from the 5.5 mile radius to 7 miles northwest of the VORTAC; and that airspace extending upward from 1,200-feet above the surface, bounded by a line beginning at lat. 44°35′27″ N., long. 124°17′15″ W.; to lat. 44°47′56″ N., long. 124°21′20″ W.; to lat. 44°51′32″ N., long. 124°21′30″ W.; to lat. 44°54′10″ N., long. 124°19′50″ W.; to lat. 45°05′37″ N., long. 124°18′01″ W.; to lat. 45°05′37″ N., long. 123°52′30″ W.; to lat. 44°31′59″ N., long. 123°58′04″ W., to lat. 44°18′20″ N.; long. 124°11′55″ W., to lat. 44°21′58″ N.; long. 124°20′30″ W., to lat. 44°25′22″ N.; long. 124°14′40″ W.; thence to point of origin; excluding that airspace within Federal Airways, the Tillamook and Corvallis, OR, Class E airspace area.

* * * * *

Issued in Seattle, Washington, on February 27, 2002.

Charles E. Davis,

Acting Assistant Manager, Air Traffic Division, Northwest Mountain Region.

[FR Doc. 02–5813 Filed 3–8–02; 8:45 am]

BILLING CODE 4910–13–M

DEPARTMENT OF DEFENSE

Department of the Army, Corps of Engineers

33 CFR Part 334

Department of Air Force, Wisconsin Air National Guard Danger Zone, R–6903, Lake Michigan, Sheboygan County, Wisconsin

AGENCY: United States Army Corps of Engineers, DoD.

ACTION: Notice of proposed rulemaking and request for comments.

SUMMARY: The U.S. Corps of Engineers is proposing regulations to reestablish a Danger Zone in Lake Michigan offshore from Sheboygan County, Wisconsin. These regulations will enable the Wisconsin Air National Guard (WiANG) to ensure the safety of fishermen and mariners in the vicinity of a live fire exercise area, which is located off the Wisconsin shoreline in Lake Michigan from Manitowoc to Port Washington, Wisconsin. The regulations are necessary to protect fishermen and mariners from potentially hazardous conditions which may exist as a result of WiANG's use of the area.

DATES: Written comments must be submitted on or before April 10, 2002.

ADDRESSES: U. S Army Corps of Engineers, ATTN: CECW–OR, 441 G Street, NW., Washington, DC 20314–1000.

FOR FURTHER INFORMATION CONTACT: Mr. Frank Torbett, Headquarters Regulatory Branch, Washington, D.C. at (202) 761–4618, or Mr. Howard J. Ecklund, Corps of Engineers, St. Paul District, Regulatory Branch, at (262) 547–4171.

SUPPLEMENTARY INFORMATION: Pursuant to its authorities in Section 7 of the Rivers and Harbors Act of 1917 (40 Stat. 266; 33 U.S.C. 1) and Chapter XIX, of the Army Appropriations Act of 1919 (40 Stat. 892; 33 U.S.C. 3) the Corps proposes to amend the restricted area regulations in 33 CFR part 334 by adding section 334.845 which establishes a danger zone in Lake Michigan offshore from Manitowoc and Sheboygan Counties, Wisconsin. The public currently has unrestricted access to the waters of Lake Michigan in close proximity to WiANG's exercise area. To better protect fishermen and mariners, the WiANG has requested the Corps of Engineers establish this danger zone that will enable the WiANG to continue to use this area to maintain its combat mission readiness.

Procedural Requirements

a. Review under Executive Order 12866

This proposed rule is issued with respect to a military function of the Defense Department and the provisions of Executive Order 12866 do not apply.

b. Review under the Regulatory Flexibility Act

These proposed rules have been reviewed under the Regulatory Flexibility Act (Public Law 96–354) which requires the preparation of a regulatory flexibility analysis for any regulation that will have a significant economic impact on a substantial number of small entities (i.e., small businesses and small Governments). The Corps expects that the economic impact of the reestablishment of this danger zone would have practically no impact on the public, no anticipated navigational hazard or interference with existing waterway traffic and accordingly, certifies that this proposal if adopted, will have no significant economic impact on small entities.

c. Review under the National Environmental Policy Act

An environmental assessment has been prepared for this action. We have concluded, based on the minor nature of the proposed danger zone regulations, that this action, if adopted, will not have a significant impact to the quality of the human environment, and preparation of an environmental impact statement is not required. The environmental assessment may be reviewed at the District office listed at the end of **FOR FURTHER INFORMATION CONTACT** paragraph above.

d. Unfunded Mandates Act

This proposed rule does not impose an enforceable duty among the private sector and, therefore, it is not a Federal private sector mandate and it is not subject to the requirements of either Section 202 or Section 205 of the Unfunded Mandates Act. We have also found under Section 203 of the Act, that small Governments will not be significantly and uniquely affected by this rulemaking.

List of Subjects in 33 CFR Part 334

Danger zones, Marine safety, Navigation (water), Restricted areas, Waterways.

For the reasons set out in the preamble, the Corps proposes to amend 33 CFR part 334, as follows:

PART 334—DANGER ZONE AND RESTRICTED AREA REGULATIONS

1. The authority citation for 33 CFR part 334 continues to read as follows:

Authority: 40 Stat. 266 (33 U.S.C. 1) and 40 Stat. 892 (33 U.S.C. 3).

2. Section 334.845 would be added to read as follows:

§ 334.845 Wisconsin Air National Guard, Volk Field military exercise area located in Lake Michigan offshore from Manitowoc and Sheboygan Counties; Danger Zone.

(a) *The area.* The waters within an area beginning at a point at latitude 43°19′00″ N., longitude 87°41′00″ W.; to latitude 44°05′30″ N, longitude 87°29′45″ W.; to latitude 44°02′00″ N., longitude 87°02′30″ W.; to latitude 43°15′30″ N., longitude 87°14′00″ W.; thence to the point of beginning.

(b) *The regulation.* (1) All vessels entering the danger zone shall proceed across the area by the most direct route and without unnecessary delay.

(2) No vessel or craft of any size shall lie-to or anchor in the danger zone at any time other than a vessel operated by or for the U.S. Coast Guard, local, State, or Federal law enforcement agencies.

(c) *Enforcement.* The regulation in this section shall be enforced by the Commanding Officer, Volk Field, WI and/or persons or agencies as he/she may designate.

Dated: February 26, 2002.

Lawrence A. Lang,

Deputy, Operations Division, Directorate of Civil Works.

[FR Doc. 02–5655 Filed 3–8–02; 8:45 am]

BILLING CODE 3710–92–P

DEPARTMENT OF VETERANS AFFAIRS

38 CFR Part 3

RIN 2900–AK97

Time Limit for Requests for *De Novo* Review

AGENCY: Department of Veterans Affairs.

ACTION: Proposed rule.

SUMMARY: This document proposes to amend the Department of Veterans Affairs (VA) adjudication regulations concerning the time a claimant has in which to request a *de novo* review of a claim at the Veterans Service Center level after filing a Notice of Disagreement (NOD). We believe this amendment will eliminate unnecessary delays in the appeals process without adversely affecting claimants.

DATES: Comments must be received on or before May 10, 2002.

ADDRESSES: Mail or hand-deliver written comments to: Director, Office of Regulations Management (02D), Department of Veterans Affairs, 810 Vermont Ave., NW., Room 1154, Washington, DC 20420; or fax comments to (202) 273–9289; or e-mail comments to *OGCRegulations@mail.va.gov*. Comments should indicate that they are submitted in response to ''RIN 2900–AK97.'' All comments received will be available for public inspection in the Office of Regulations Management, Room 1158, between the hours of 8:00 a.m. and 4:30 p.m., Monday through Friday (except holidays).

FOR FURTHER INFORMATION CONTACT: Bill Russo, Regulations Staff, Compensation and Pension Service, Veterans Benefits Administration, Department of Veterans Affairs, 810 Vermont Avenue, NW., Washington, DC 20420, telephone (202) 273–7211.

SUPPLEMENTARY INFORMATION: Under existing statutes and regulations, a claimant who disagrees with a decision by a Veterans Service Center may appeal that decision by filing a NOD. Upon receipt of a NOD, VA must ''take such development or review action as it deems proper under the provisions of regulations not inconsistent with [title 38 U.S. Code].'' 38 U.S.C. 7105(d)(1). If this development or review does not resolve the disagreement, either by VA granting the claim or the claimant withdrawing the NOD, then VA must issue a Statement of the Case (SOC). After receiving the SOC, the claimant may continue their appeal, to the Board of Veterans' Appeals, by filing a Substantive Appeal.

Title 38 CFR 3.2600 allows claimants who have filed a timely NOD to obtain a *de novo* review by Veterans Service Center personnel. This new, optional review process was established through a final regulation published May 2, 2001 (66 FR 21871–21874). This document proposes to amend 38 CFR 3.2600 to reduce the time limit in which claimants may request a *de novo* review (a new and complete review with no deference given to the decision being reviewed) by Veterans Service Center personnel. Section 3.2600(b) currently states that unless a claimant has requested review under § 3.2600 with his or her NOD, VA will, upon receipt of the NOD, notify the claimant in writing of his or her right to a review under this section. Section 3.2600(b) further states that to obtain such a review, the claimant must request it not later than 60 days after the date VA mails the notice and that this time limit may not be extended. It also states that if the claimant fails to request *de novo* review within 60 days, VA will proceed with the traditional appellate process by issuing a SOC.

This rulemaking proposes to reduce that 60-day period to 15 days, in order to eliminate unnecessary delays in the appeals process. Under current § 3.2600(b), VA must wait up to 60 days from the date on which VA notifies a claimant of their right to a *de novo* review, before it may issue a SOC. If the claimant does not wish to have the Veterans Service Center review the claim *de novo*, this delays the appeals process by 60 days.

In VA's experience, many claimants or their representatives request *de novo* review along with their NOD. For those who do not, we believe that 15 days is enough time to decide whether to request a *de novo* review. Furthermore, by reducing the period during which VA will accept a request for *de novo* review from 60 to 15 days, we reduce the time needed to process an NOD by 45 days, no matter which option the claimant chooses.

Paperwork Reduction Act

This document contains no provisions constituting a collection of information under the Paperwork Reduction Act (44 U.S.C. 3501–3520).

Executive Order 12866

This document has been reviewed by the Office of Management and Budget under Executive Order 12866.

Regulatory Flexibility Act

The Secretary hereby certifies that the adoption of this proposed rule would not have a significant economic impact on a substantial number of small entities as they are defined in the Regulatory Flexibility Act, 5 U.S.C. 601–612. The proposed rule does not directly affect any small entities. Only VA beneficiaries are directly affected. Therefore, pursuant to 5 U.S.C. 605(b), these amendments are exempt from the initial and final regulatory flexibility analysis requirements of sections 603 and 604.

The Catalog of Federal Domestic Assistance program numbers are 64.100, 64.101, 64.104, 64.105, 64.106, 64.109, 64.110, and 64.127.

List of Subjects in 38 CFR Part 3

Administrative practice and procedure, Claims, Disability benefits, Health care, Pensions, Veterans, Vietnam.

For the reasons set forth in the preamble, 38 CFR part 3 is proposed to be amended as follows:

PART 3—ADJUDICATION

Subpart D—Universal Adjudication Rules That Apply to Benefit Claims Governed by Part 3 of This Title

1. The authority citation for part 3, subpart D continues to read as follows:

Authority: 38 U.S.C. 501(a), unless otherwise noted.

2. In § 3.2600, paragraph (b) is revised to read as follows:

§ 3.2600 Review of benefit claims decisions.

* * * * *

(b) Unless the claimant has requested review under this section with his or her Notice of Disagreement, VA will, upon receipt of the Notice of Disagreement, notify the claimant in writing of his or her right to a review under this section. To obtain such a review, the claimant must request it not later than 15 days after the date VA mails the notice. This 15-day time limit may not be extended. If the claimant fails to request review under this section not later than 15 days after the date VA mails the notice, VA will proceed with the traditional appellate process by issuing a Statement of the Case. A claimant may not have more than one review under this section of the same decision.

* * * * *

Approved: October 17, 2001.

Anthony J. Principi,

Secretary of Veterans Affairs.

[FR Doc. 02–5785 Filed 3–8–02; 8:45 am]

BILLING CODE 8320–01–P

FEDERAL COMMUNICATIONS COMMISSION

47 CFR Part 54

[CC Docket 96–45; FCC 02–41]

Federal-State Joint Board on Universal Service

AGENCY: Federal Communications Commission

ACTION: Notice of proposed rulemaking.

SUMMARY: In this document, the Commission seeks comment on issues from the *Ninth Report and Order* remanded by the United States Court of Appeals for the Tenth Circuit. Specifically, the court remanded the *Ninth Report and Order*, to the Commission to ''establish an adequate legal and factual basis for the Ninth Order and, if necessary, to reconsider the operative mechanism promulgated in that Order.'' The Commission seeks

comment on issues remanded by the court.

DATES: Comments are due April 10, 2002. Reply comments are due April 25, 2002.

FOR FURTHER INFORMATION CONTACT: Katie King at (202) 418–7491 or Jennifer Schneider at (202) 418–0425 in the Accounting Policy Division, Common Carrier Bureau.

SUPPLEMENTARY INFORMATION: This is a summary of the Commission's *Notice of Proposed Rulemaking* in CC Docket No. 96–45 released on February 15, 2002 (NPRM). The NPRM is related to an Order that was released as part of the same document. The full text of this document is available for public inspection during regular business hours in the FCC Reference Center, Room CY–A257, 445 12th Street, SW, Washington, DC, 20554.

I. Introduction

1. In this NPRM, the Commission seeks comment on the issues from the *Ninth Report and Order,* 64 FR 67416, December 1, 1999, remanded by the United States Court of Appeals for the Tenth Circuit. *The Ninth Report and Order* established a federal high-cost universal service support mechanism for non-rural carriers based on forward-looking economic costs. The court remanded the *Ninth Report and Order* to the Commission for further consideration and explanation of its decision. Specifically, the court remanded the *Ninth Report and Order* to the Commission to ''establish an adequate legal and factual basis for the Ninth Order and, if necessary, to reconsider the operative mechanism promulgated in that Order.'' In particular, the court concluded that the Commission did not (1) define adequately the key statutory terms ''reasonably comparable'' and ''sufficient'; (2) adequately explain setting the funding benchmark at 135 percent of the national average; (3) provide inducements for state universal service mechanisms; or (4) explain how this funding mechanism will interact with other universal service programs. The Commission seeks comment on the first three issues and refers the record collected in this proceeding to the Federal-State Joint Board on Universal Service (Joint Board) for a recommended decision in the Order, released with the NPRM.

II. Issues for Comment

2. The Commission seeks comment on a number of issues that will enable the Commission to better explain or modify the forward-looking high-cost universal service support mechanism implemented in the *Ninth Report and Order* consistent with the court's decision. Specifically, the Commission seeks comment on: (1) How the Commission should define certain key statutory terms; (2) whether, in light of the interpretation of those key statutory terms, the Commission can and should maintain the previously established benchmark or, in the alternative, should adopt a new benchmark or benchmarks; and (3) how the Commission should induce states to implement state universal service policies.

A. Definitions of ''Reasonably Comparable'' and ''Sufficient''

3. The Commission seeks comment on how it should define reasonably comparable for the purpose of achieving reasonable comparability of rates. Section 254 of the Communications Act of 1934, as amended (Act), suggests that rates in rural, insular and high cost areas should be compared to rates in urban areas to determine reasonable comparability. The Commission makes a two step inquiry. First, when determining whether rates are reasonably comparable, the Commission seeks comment on what should be compared. For example, such a comparison could be: ''urban'' rates compared to all other rates, ''rural'' rates compared to all other rates, or specifically defined urban and rural rates compared to each other. The Commission seeks comment on appropriate definitions of urban and rural. If commenters suggest that urban and/or rural should be defined by geographical areas, the Commission requests comment on the particular breakdown of such areas. For example, urban and rural could be defined in terms of population density. Urban and rural also could be defined by number of lines per wire center. If the line count per wire center is used, would small wire centers in large cities be defined as rural? Is it possible to adequately define reasonable comparability without adopting a definition for urban and rural? Second, the Commission seeks comment on what a fair range of rates would be to determine whether rates are reasonably comparable. The court suggested that rates differing 70 to 80 percent would not be within a fair range of rates that could be considered reasonably comparable. In this regard, the Commission notes that costs in rural areas may be one hundred times greater than costs in urban areas. Taking into account such cost differences, what is a reasonable range of rates? What other factors should be considered when determining reasonable comparability of rates? The Commission seeks empirical evidence of the range of rates in rural and urban areas based on the definition of those terms provided by commenters.

4. The Commission also seeks comment on what it means for federal support for universal service to be ''sufficient.'' Specifically, if the Commission determines that high-cost support results in rural rates that are reasonably comparable to urban rates, is that level of support sufficient under section 254 of the Act, or should the Commission take a broader examination of sufficiency? In establishing the support mechanism, the Commission attempted to balance the goal of ensuring that consumers in high-cost areas have affordable access to quality service, against the goal of ensuring that the fund is no larger than necessary to minimize the burdens on the carriers that contribute. Because the Commission must weigh several principles in determining the sufficiency of its support, the Commission seeks comment on whether it should give more weight to the principle of reasonable comparability of rates, or should the Commission continue to give weight equally to other principles listed in section 254(b) of the Act. In addition, assuming that states will implement mechanisms to support universal service, as suggested by the court and described, the Commission seeks comment on whether sufficiency should be determined by considering federal support only, or state support as well.

B. Benchmark Issues

5. The Commission seeks comment on whether it should adopt a different benchmark or benchmarks or whether it should continue to use the 135 percent benchmark. If commenters suggest that the Commission should adopt a new benchmark or benchmarks, the Commission seeks comment on how it should determine the new benchmark(s). Commenters should provide both reasoned analysis and empirical data to show that their proposed benchmarks support reasonable comparability of rates and sufficient high-cost support. The Commission also notes that the high-cost loop support mechanism for rural carriers does not use a single benchmark but, rather, uses a step function. The step function has multiple benchmarks with greater percentages of support provided as costs increase. The Commission seeks comment on whether it should adopt a step function (or some formula that provides a larger percentage of support as costs increase) in the federal high-cost support

mechanism for non-rural carriers as well. Commenters should describe precisely how the step function would operate, the range and intervals of steps, and provide the empirical support and analysis for how such a function would support reasonable comparability of rates and sufficiency of support. To the extent commenters advocate that the Commission should retain the 135 percent benchmark, commenters should provide both reasoned analysis and empirical data to show that the 135 percent benchmark supports reasonable comparability of rates and sufficiency of support. In this regard, the Commission notes that the 135 percent benchmark is consistent with an average of the benchmarks used in the high-cost loop support mechanism, which previously provided support to all carriers (and currently provides support to rural carriers). The Commission seeks comment on whether an average of benchmarks is appropriate for the non-rural high-cost mechanism.

6. The Commission also seeks comment on whether it should continue to use a benchmark based on nationwide average cost and compare it to statewide average costs. Although the court rejected Qwest's argument that the use of statewide and national averages is necessarily inconsistent with section 254, the court suggested that such a comparison would not be consistent with the statutory comparison of urban and rural rates without evidence that the benchmark actually produced comparable rates. If the Commission continues to use nationwide and statewide averages, how should the Commission measure reasonable comparability when rural costs are included in the nationwide average? In the alternative, should the Commission use a benchmark or benchmarks based on urban-only costs? Will definitions of ''urban'' and ''rural'' be required to determine an urban-only benchmark? To the extent the Commission decides to implement a benchmark based only on urban and/or rural costs, should this definition be the same as discussed above in section II.A.? The Commission also seeks comment on how the terms ''urban'' and ''rural'' should be defined—*e.g.,* by wire centers of a certain size, by certain density zones, urban versus non-urbanized areas or some other criterion. Commenters should provide empirical support and analysis showing how their proposed benchmark or benchmarks result in reasonably comparable urban and rural rates and define precisely the statutory terms, urban, rural, and reasonably comparable in their proposed methodology.

C. State Inducements

1. The Commission seeks comment on how it should induce states to implement mechanisms to support universal service. Specifically, the Commission seeks comment on whether it should: (1) implement a state share requirement, similar to that of the *Seventh Report and Order,* 64 FR 30917, June 9, 1999; (2) condition federal support on some form of state action; (3) enter into a binding cooperative agreement with states as suggested by the court; or (4) adopt some other form of state inducement. To the extent that commenters suggest the Commission should adopt one of these options, commenters should provide specific descriptions of their proposals and recommendations for implementation. If the Commission were to condition federal support on state action, in what manner and to what extent should federal support be so conditioned? The Commission also seeks comment on what kind of state action should be required. If the Commission were to enter into binding cooperative agreements with states, what form should the agreements take? Would the Commission enter into such an agreement with individual states or with the states collectively? How would such an agreement be enforced? In addition, how would the Commission induce and enforce the inducement of states to implement universal service support mechanisms in states that do not receive federal universal service support under the non-rural high-cost mechanism?

III. Procedural Issues

A. Ex Parte Presentations

8. This is a permit but disclose rulemaking proceeding. Ex parte presentations are permitted, except during the Sunshine Agenda period, provided that they are disclosed as provided in the Commission's rules.

B. Initial Regulatory Flexibility Analysis

9. As required by the Regulatory Flexibility Act of 1980, as amended (RFA), the Commission has prepared this present Initial Regulatory Flexibility Analysis (IRFA) of the possible significant economic impact on a substantial number of small entities by the policies and rules proposed in this NPRM. Written public comments are requested on this IRFA. Comments must be identified as responses to the IRFA and must be filed by the deadlines for comments on the NPRM provided in paragraph number 21 of the item. The Commission will send a copy of the NPRM, including this IRFA, to the Chief Counsel for Advocacy of the Small Business Administration (SBA). In addition, the NPRM and IRFA (or summaries thereof) will be published in the **Federal Register**.

1. Need for, and Objectives of, the Proposed Rules

10. In the *First Report and Order,* 62 FR 32862, June 17, 1997, the Commission adopted a plan for universal service support for rural, insular, and high cost areas to replace longstanding federal subsidies to incumbent local telephone companies with explicit, competitively neutral federal universal service mechanisms. In doing so, the Commission adopted the recommendation of the Joint Board that an eligible carrier's support should be based upon the forward-looking economic cost of constructing and operating the network facilities and functions used to provide the services supported by the federal universal service mechanism. In the *Ninth Report and Order,* the Commission adopted a federal high-cost universal service support mechanism for non-rural carriers based on forward-looking economic costs. The U.S. Court of Appeals for the Tenth Circuit remanded the *Ninth Report and Order* to the Commission for further explanation of its decision.

11. In the NPRM, the Commission seeks comment on issues from the *Ninth Report and Order*, remanded by the United States Court of Appeals for the Tenth Circuit. Specifically, the Commission seeks comment on: (1) How the Commission should define the key statutory terms ''reasonably comparable'' and ''sufficient'; (2) whether, in light of the interpretation of those key statutory terms, the Commission can and should maintain the previously established benchmark or, in the alternative, should adopt a new benchmark or benchmarks; and (3) how the Commission should induce states to implement state universal service policies. The objective of the NPRM is to assemble a record, to refer the record collected in this proceeding to the Joint Board for a recommended decision, and to consider the record and Joint Board recommendations in formulating a response to the court's remand. The Commission expects that, upon receipt of a recommended decision from the Joint Board, the Commission will be able adopt an order implementing a high-cost support mechanism that will be sufficient to enable non-rural carriers' rates for service to remain affordable and

reasonably comparable in all regions of the nation.

2. Legal Basis

12. This rulemaking action is supported by sections 1–4, 201–205, 214, 218–220, 254, 303(r), 403 and 410 of the Communications Act of 1934, as amended.

3. Description and Estimate of the Number of Small Entities to Which the Notice Will Apply

13. The RFA generally defines ''small entity'' as having the same meaning as the term ''small business,'' ''small organization,'' and ''small government jurisdiction.'' In addition, the term ''small business'' has the same meaning as the term ''small business concern'' under the Small Business Act, unless the Commission has developed one or more definitions that are appropriate to its activities. Under the Small Business Act, a ''small business concern'' is one that: (1) Is independently owned and operated; (2) is not dominant in its field of operation; and (3) meets any additional criteria established by the SBA.

14. The SBA has defined a small business for Standard Industrial Classification (SIC) category 4813 (Telephone Communications Except Radiotelephone) to be a small entity when it has no more than 1,500 employees.

15. The Commission has included small incumbent local exchange carriers in this present RFA analysis. As noted above, a ''small business'' under the RFA is one that, inter alia, meets the pertinent small business size standard (*e.g.*, a telephone communications business having 1,500 or fewer employees), and ''is not dominant in its field of operation.'' The SBA's Office of Advocacy contends that, for RFA purposes, small incumbent local exchange carriers are not dominant in their field of operation because any such dominance is not ''national'' in scope. The Commission has therefore included small incumbent local exchange carriers in this RFA analysis, although the Commission emphasizes that this RFA action has no effect on Commission analyses and determinations in other, non-RFA contexts.

4. Description of Projected Reporting, Recordkeeping, and Other Compliance Requirements

16. With respect to reporting and recordkeeping, the NPRM seeks comment on issues concerning the *Ninth Report and Order*, that have been remanded by the court, as described above. Changes in recordkeeping, if any, will primarily occur in the area of benchmark issues. If the Commission upholds the mechanism adopted in the *Ninth Report & Order*, there will be no changes. If the Commission changes the current high-cost support mechanism, however, adoption of new rules or requirements may require additional recordkeeping. For example, if the Commission adopts a mechanism that compares ''urban'' and/or ''rural'' costs or rates in order to determine an appropriate benchmark, additional information from all non-rural carriers may be necessary, such as line count information for urban and rural areas.

5. Steps Taken To Minimize Significant Economic Impact on Small Entities, and Significant Alternatives Considered

17. The RFA requires an agency to describe any significant alternatives that it has considered in reaching its proposed approach, which may include the following four alternatives (among others): (1) The establishment of differing compliance or reporting requirements or timetables that take into account the resources available to small entities; (2) the clarification, consolidation, or simplification of compliance or reporting requirements under the rule for small entities; (3) the use of performance, rather than design, standards; and (4) an exemption from coverage of the rule, or any part thereof, for small entities.

18. The proposals resulting from the NPRM could have varying positive or negative impacts on telecommunications carriers, including any such small carriers. Public comments are welcomed in the NPRM that would reduce any potential impacts on small entities. Specifically, suggestions are sought on different compliance or reporting requirements that would take into account the resources of small entities. Comments are also sought on possibilities for clarification, consolidation, or simplification of compliance and reporting requirements for small entities that would be subject to the rules, and on whether waiver or forbearance from the rules for small entities would be feasible or appropriate. Comments should be supported by specific economic analysis.

19. The Commission does not believe that any final result in any area of the proposed rules under consideration will have a differential impact on small entities. With the request for comments in the NPRM, however, the commenters may present the Commission with various proposals that may have varying impacts on small entities. The Commission seeks comment on whether any proposals, if implemented, may result in an unfair burden.

6. Federal Rules That May Duplicate, Overlap, or Conflict With the Proposed Rules

20. None.

C. Comment Filing Procedures

21. The Commission invites comment on the issues and questions set forth in the Notice of Proposed Rulemaking and Initial Regulatory Flexibility Analysis contained herein. Pursuant to applicable procedures set forth in §§ 1.415 and 1.419 of the Commission's rules, interested parties may file comments on or before April 10, 2002, and reply comments on or before April 25, 2002. All filings should refer to CC Docket No. 96–45. Comments may be filed using the Commission's Electronic Comment Filing System (ECFS) or by filing paper copies.

22. Comments filed through ECFS can be sent as an electronic file via the Internet to <*http://www.fcc.gov/e-file/ecfs.html*>. Generally, only one copy of an electronic submission must be filed. In completing the transmittal screen, commenters should include their full name, Postal Service mailing address, and the applicable docket number, which in this instance is CC Docket No. 96–45. Parties may also submit an electronic comment by Internet e-mail. To receive filing instructions for e-mail comments, commenters should send an e-mail to *ecfs@fcc.gov*, and should include the following words in the body of the message: get form <your e-mail address>. A sample form and directions will be sent in reply.

23. Parties who choose to file by paper must file an original and four copies of each filing. If more than one docket or rulemaking number appears in the caption of this proceeding, commenters must submit two additional copies for each additional docket or rulemaking number. Parties who choose to file by paper are hereby notified that effective December 18, 2001, the Commission's contractor, Vistronix, Inc., will receive hand-delivered or messenger-delivered paper filings for the Commission's Secretary at a new location in downtown Washington, DC. The address is 236 Massachusetts Avenue, NE, Suite 110, Washington, DC, 20002. The filing hours at this location will be 8:00 am to 7:00 pm. All hand deliveries must be held together with rubber bands or fasteners. Any envelopes must be disposed of before entering the building. This facility is the only location where hand-delivered or messenger-delivered paper filings for the Commission's Secretary will be

accepted. Accordingly, the Commission will no longer accept these filings at 9300 East Hampton Drive, Capitol Heights, MD, 20743. Other messenger-delivered documents, including documents sent by overnight mail (other than United States Postal Service (USPS) Express Mail and Priority Mail), must be addressed to 9300 East Hampton Drive, Capitol Heights, MD, 20743. This location will be open 8:00 a.m. to 5:30 p.m. The USPS first-class mail, Express Mail, and Priority Mail should continue to be addressed to the Commission's headquarters at 445 12th Street, SW, Washington, DC, 20554. The USPS mail addressed to the Commission's headquarters actually goes to our Capitol Heights facility for screening prior to delivery at the Commission.

If you are sending this type of document or using this delivery method.	It should be addressed for delivery to * * *
Hand-delivered or messenger-delivered paper filings for the Commission's Secretary.	236 Massachusetts Avenue, NE, Suite 110, Washington, DC 20002 (8:00 am to 7:00 pm).
Other messenger-delivered documents, including documents sent by overnight mail (other than United States Postal Service Express Mail and Priority Mail).	9300 East Hampton Drive, Capitol Heights, MD 20743 (8:00 am to 5:30 pm).
United States Postal Service first-class mail, Express Mail, and Priority Mail.	445 12th Street, SW Washington, DC 20554.

All filings must be sent to the Commission's Acting Secretary: William F. Caton, Office of the Secretary, Federal Communications Commission, 445 12th Street, SW, Suite TW–A325, Washington, DC 20554.

24. Parties who choose to file by paper should also submit their comments on diskette to Sheryl Todd, Accounting Policy Division, Common Carrier Bureau, Federal Communications Commission, 445 12th Street, SW, Room 5–B540, Washington, DC 20554. Such a submission should be on a 3.5-inch diskette formatted in an IBM compatible format using Microsoft Word or compatible software. The diskette should be accompanied by a cover letter and should be submitted in ''read only'' mode. The diskette should be clearly labeled with the commenter's name, proceeding (including the docket number, in this case, CC Docket No. 96–45), type of pleading (comment or reply comment), date of submission, and the name of the electronic file on the diskette. The label should also include the following phrase ''Disk Copy—Not an Original.'' Each diskette should contain only one party's pleading, preferably in a single electronic file. In addition, commenters must send diskette copies to the Commission's copy contractor, Qualex International, Portals II, 445 12th Street, SW, Room CY–B402, Washington, DC 20554.

25. Regardless of whether parties choose to file electronically or by paper, parties should also file one copy of any documents filed in this docket with the Commission's copy contractor, Qualex International, Inc., Portals II, 445 12th Street, SW, Room CY–B402, Washington, DC 20554. Comments and reply comments will be available for public inspection during regular business hours in the FCC Reference Center, Room CY–A257, 445 12th Street, SW, Washington, DC 20554. In addition, the full text of the document is available for public inspection and copying during regular business hours at the FCC Reference Information Center, Portals II, 445 12th Street, SW, Room CY–A257, Washington, DC, 20554. The document may also be purchased from the Commission's duplicating contractor, Qualex International, Portals II, 445 12th Street, SW, Room CY–B402, Washington, DC 20554, telephone 202–863–2893, facsimile 202–863–2898, or via e-mail *qualexint@aol.com.*

26. Comments and reply comments must include a short and concise summary of the substantive arguments raised in the pleading. Comments and reply comments must also comply with section 1.49 and all other applicable sections of the Commission's rules. The Commission directs all interested parties to include the name of the filing party and the date of the filing on each page of their comments and reply comments. All parties are encouraged to utilize a table of contents, regardless of the length of their submission. The Commission also strongly encourages parties to track the organization set forth in the NPRM in order to facilitate its internal review process.

D. Further Information

27. Alternative formats (computer diskette, large print, audio recording, and Braille) are available to persons with disabilities by contacting Brian Millin at (202) 418–7426 voice, (202) 418–7365 TTY, or *bmillin@fcc.gov.* This NPRM can also be downloaded in Microsoft Word and ASCII formats at *http://www.fcc.gov/ccb/universal_service/highcost.*

IV. Ordering Clauses

28. Pursuant to sections 1–4, 201–205, 214, 218–220, 254, 303(r), 403 and 410 of the Communications Act of 1934, as amended, 47 U.S.C. 151–154, 201–205, 214, 218–220, 254, 303(r), 403 and 410, the *Notice of proposed rulemaking* is hereby Adopted.

29. The Commission's Consumer Information Bureau, Reference Information Center, *Shall send* a copy of the NPRM, including the Initial Regulatory Flexibility Analysis, to the Chief Counsel for Advocacy of the Small Business Administration.

List of Subjects in 47 CFR Part 54

Communications common carriers, Telecommunications, Telephone.

Federal Communications Commission.

William F. Caton,

Acting Secretary.

[FR Doc. 02–5676 Filed 3–8–02; 8:45 am]

BILLING CODE 6712–01–U

FEDERAL COMMUNICATIONS COMMISSION

47 CFR Part 73

[DA 02–498, MM Docket No. 02–45, RM–10374]

Digital Television Broadcast Service; Cadillac and Manistee, MI

AGENCY: Federal Communications Commission.

ACTION: Proposed rule.

SUMMARY: The Commission requests comments on a petition filed by Central Michigan University, the licensee of noncommercial station WCMV–TV, Cadillac, Michigan, and WCMW–TV, Manistee, Michigan, requesting the substitution of DTV channel *17 for

DTV channel *58 as WCMV–DT paired DTV allotment; and the substitution of DTV channel *58 for DTV channel *17 as WCMW–DT's paired DTV allotment. DTV Channel *17 can be allotted to Cadillac in compliance with the principle community coverage requirements of Section 73.625(a) at reference coordinates 44–44–53 N. and 85–04–08 W. with a power of 500 and a height above average terrain (HAAT) of 399 meters. DTV channel *58 can be allotted to Manistee in compliance with the principle community coverage requirements of Section 73.625(a) at reference coordinates 44–03–57 N. and 86–19–58 W. with a power of 200 and a height above average terrain (HAAT) of 104 meters. Since the communities of Cadillac and Manistee are located within 400 kilometers of the U.S.-Canadian border, concurrence from the Canadian government must be obtained for these allotments.

DATES: Comments must be filed on or before April 29, 2002, and reply comments on or before May 14, 2002.

ADDRESSES: Federal Communications Commission, 445 12th Street, SW., Room TW–A325, Washington, DC 20554. In addition to filing comments with the FCC, interested parties should serve the petitioner, or its counsel or consultant, as follows: Todd D. Gray, Margaret L. Miller, Dow, Lohnes & Albertson, PLLC, 1200 New Hampshire Avenue, NW., Suite 800, Washington, DC 20036–6802 (Counsel for Central Michigan University).

FOR FURTHER INFORMATION CONTACT: Pam Blumenthal, Mass Media Bureau, (202) 418–1600.

SUPPLEMENTARY INFORMATION: This is a synopsis of the Commission's Notice of Proposed Rule Making, MM Docket No. 02–45, adopted March 1, 2002, and released March 6, 2001. The full text of this document is available for public inspection and copying during regular business hours in the FCC Reference Information Center, Portals II, 445 12th Street, SW., Room CY–A257, Washington, DC 20554. This document may also be purchased from the Commission's duplicating contractor, Qualex International, Portals II, 445 12th Street, SW., Room CY–B402, Washington, DC 20554, telephone 202–863–2893, facsimile 202–863–2898, or via-e-mail *qualexint@aol.com*.

Provisions of the Regulatory Flexibility Act of 1980 do not apply to this proceeding.

Members of the public should note that from the time a Notice of Proposed Rule Making is issued until the matter is no longer subject to Commission consideration or court review, all *ex parte* contacts are prohibited in Commission proceedings, such as this one, which involve channel allotments. See 47 CFR 1.1204(b) for rules governing permissible *ex parte* contacts.

For information regarding proper filing procedures for comments, see 47 CFR 1.415 and 1.420.

List of Subjects in 47 CFR Part 73

Television, Digital television broadcasting.

For the reasons discussed in the preamble, the Federal Communications Commission proposes to amend 47 CFR part 73 as follows:

PART 73—TELEVISION BROADCAST SERVICES

1. The authority citation for part 73 continues to read as follows:

Authority: 47 U.S.C. 154, 303, 334, and 336.

§73.622 [Amended]

2. Section 73.622(b), the Table of Digital Television Allotments under Michigan is amended by removing DTV Channel *58 and adding DTV Channel *17 at Cadillac; and by removing DTV channel *17 and adding DTV channel *58 at Manistee.

Federal Communications Commission.

Barbara A. Kreisman,

Chief, Video Services Division, Mass Media Bureau.

[FR Doc. 02–5709 Filed 3–8–02; 8:45 am]

BILLING CODE 6712–01–P

FEDERAL COMMUNICATIONS COMMISSION

47 CFR Part 73

[DA 02–409; MM Docket No. 02–40; RM–10377]

Radio Broadcasting Services; Goldsboro and Smithfield, North Carolina

AGENCY: Federal Communications Commission.

ACTION: Proposed rule.

SUMMARY: This document requests comments on a petition for rule making filed on behalf of New Age Communications, Inc., licensee of Station WKIX(FM), Channel 272A, Goldsboro, North Carolina, requesting the reallotment of Channel 272A from Goldsboro to Smithfield, North Carolina, and modification of its authorization accordingly, pursuant to the provisions of Section 1.420(i) of the Commission's Rules. The coordinates for requested Channel 272A at Smithfield, North Carolina, are 35–28–21 NL and 78–19–43 WL.

Petitioner's reallotment proposal complies with the provisions of section 1.420(i) of the Commission's Rules, and therefore, the Commission will not accept competing expressions of interest in the use of Channel 272A at Smithfield, North Carolina, or require the petitioner to demonstrate the availability of an additional equivalent class channel.

DATES: Comments must be filed on or before April 8, 2002, and reply comments on or before April 23, 2002.

ADDRESSES: Secretary, Federal Communications Commission, 445 12th Street, SW., Room TW–A325, Washington, DC 20554. In addition to filing comments with the FCC, interested parties should serve the petitioner's counsel, as follows: Wade H. Hargrove, Esq. and David Kusher, Esq., Brooks, Pierce, McLendon, Humphrey & Leonard, L.L.P.; P.O. Box 1800; Raleigh, North Carolina 27602.

FOR FURTHER INFORMATION CONTACT: R. Barthen Gorman, Mass Media Bureau, (202) 418–2180.

SUPPLEMENTARY INFORMATION: This is a synopsis of the Commission's Notice of Proposed Rule Making, MM Docket No. 02–40, adopted February 13, 2002, and released

February 22, 2002. The full text of this Commission decision is available for inspection and copying during regular business hours in the FCC's Reference Information Center at Portals II, 445 12th Street, SW, CY–A257, Washington, DC, 20554. This document may also be purchased from the Commission's duplicating contractors, Qualex International, Portals II, 445 12th Street, SW, Room CY–B402, Washington, DC, 20554, telephone 202–863–2893, facsimile 202–863–2898, or via e-mail *qualexint@aol.com*.

The provisions of the Regulatory Flexibility Act of 1980 do not apply to this proceeding.

Members of the public should note that from the time a Notice of Proposed Rule Making is issued until the matter is no longer subject to Commission consideration or court review, all *ex parte* contacts are prohibited in Commission proceedings, such as this one, which involve channel allotments. *See* 47 CFR 1.1204(b) for rules governing permissible *ex parte* contacts.

For information regarding proper filing procedures for comments, *See* 47 CFR 1.415 and 1.420.

List of Subjects in 47 CFR Part 73

Radio broadcasting.

For the reasons discussed in the preamble, the Federal Communications Commission proposes to amend 47 CFR part 73 as follows:

PART 73—[RADIO BROADCAST SERVICES]

1.The authority citation for Part 73 continues to read as follows:

Authority: 47 U.S.C. 154, 303, 334, and 336.

§ 73.202 [Amended]

1. Section 73.202(b), the Table of FM Allotments under North Carolina, is amended by adding Smithfield, Channel 272A, and removing Channel 272A at Goldsboro.

Federal Communications Commission.

John A. Karousos,

Chief, Allocations Branch, Policy and Rules Division, Mass Media Bureau.

[FR Doc. 02–5710 Filed 3–8–02; 8:45 am]

BILLING CODE 6712–01–P

DEPARTMENT OF TRANSPORTATION

National Highway Traffic Safety Administration

49 CFR Part 538

[Docket No.: NHTSA–2001–10774; Notice 2]

RIN 2127–AI41

Automotive Fuel Economy Manufacturing Incentives for Alternative Fuel Vehicles

AGENCY: National Highway Traffic Safety Administration (NHTSA), Department of Transportation (DOT).

ACTION: Notice of proposed rulemaking (NPRM).

SUMMARY: To provide an incentive for the production of vehicles that can operate on certain alternative fuels as well as on regular petroleum fuels, Congress established a special procedure for calculating the fuel economy of those vehicles for the purpose of determining compliance with the Corporate Average Fuel Economy standards. This procedure increases the fuel economy attributed to such ''dual-fueled'' vehicles, thus facilitating compliance with those standards. By statute, the incentive is available through the end of the 2004 model year and may be extended by up to four additional years through rulemaking.

This document proposes to extend the availability of the incentive by four years, i.e., through the end of the 2008 model year.

DATES: Comments must be received on or before April 10, 2002.

ADDRESSES: You may submit your comments in writing to: Docket Section, National Highway Traffic Safety Administration, 400 Seventh Street, SW., Washington, DC 20590. Alternatively, you may submit your comments electronically by logging onto the Docket Management System (DMS) Website at *http://dms.dot.gov.* Click on ''Help & Information'' or ''Help/Info'' to view instructions for filing your comments electronically. Regardless of how you submit your comments, you should mention the docket number of this document. You can find the number at the beginning of this document. Docket hours are 9 a.m. to 5 p.m. Monday through Friday.

FOR FURTHER INFORMATION CONTACT: The following persons at the National Highway Traffic Safety Administration, 400 Seventh Street, SW., Washington, DC 20590:

For non-legal issues: Mr. Kenneth Katz, Consumer Programs Division, Office of Planning and Consumer Programs, NPS–32, Room 5320, telephone (202) 366–4936, facsimile (202) 493–2290.

For legal issues: Otto Matheke, Office of the Chief Counsel, NCC–20, Room 5219, telephone (202) 366–5263, facsimile (202) 366–3820.

SUPPLEMENTARY INFORMATION:

Table of Contents

I. Summary of Agency Proposal
II. Background
A. Statutory Background
B. Report To Congress
C. Other Developments
D. U.S. Dependence on Imported Petroleum
E. Availability and Use of Alternative Fuels
III. Agency Proposal
IV. Benefits and Costs
V. Rulemaking Notices and Analyses
A. Executive Order 12866 and DOT Regulatory Policies and Procedures
B. Regulatory Flexibility Act
C. National Environmental Policy Act
D. Executive Order 13132 (Federalism)
E. Civil Justice Reform
F. Paperwork Reduction Act
G. National Technology Transfer and Advancement Act
H. Unfunded Mandates Reform Act
I. Plain Language
J. Regulation Identifier Number (RIN)
VI. Preparation and Submission of Comments

I. Summary of Agency Proposal

Congress created the Corporate Average Fuel Economy (CAFE) program when it enacted the Energy Policy and Conservation Act of 1975 (Pub. L. 94–163; Dec. 22, 1975). The CAFE statutory provisions, now codified in Chapter 329 of Title 49 of the United States Code (49 U.S.C. 32901 *et seq.*), mandate fuel economy standards that must be met by vehicle manufacturers. These standards apply separately to each manufacturer's annual fleet of passenger cars and to its annual fleet of light trucks under 8,500 lbs. gross vehicle weight rating, instead of applying to individual vehicles. Each manufacturer's average fuel economy is determined by the Environmental Protection Agency in accordance with procedures set forth in 49 U.S.C. 32904. Those procedures provide for determining the fuel economy of a manufacturer's model types produced in a particular model year and calculating a weighted fuel economy average for the manufacturer.

Congress amended the CAFE provisions when it enacted the Alternative Motor Fuels Act of 1988 (''AMFA'') (Pub. L. 100–94; October 14, 1988). The purposes of AMFA were to encourage the development and use of methanol, ethanol and natural gas as transportation fuels and to promote the production of alternative fuel vehicles (AFVs). For the latter purpose, AMFA provides special procedures for calculating the fuel economy of ''dedicated'' alternative fuel vehicles and ''dual-fueled'' vehicles that meet specified eligibility criteria. ''Dedicated vehicles'' are cars or light trucks designed to operate exclusively either on natural gas or on a methanol or ethanol fuel mixture composed of at least 85 percent of either substance. ''Dual-fueled vehicles'' have the capability to operate on conventional petroleum and the capability to operate on an alternative fuel. Most dual-fueled vehicles produced to date are capable of operating on E85 (a blend of 85 percent ethanol and 15 percent gasoline) and either gasoline or diesel. The special calculation procedures used in determining the fuel economy of alternative fuel vehicles substantially increase the fuel economy ratings of these vehicles.

In creating the incentive program for dual-fueled vehicles, Congress expressly limited both the extent to which a manufacturer can avail itself of the incentive in any model year as well as the duration of the incentives.[1] For the 1993–2004 model years, the maximum increase in CAFE available to a manufacturer for producing qualifying dual-fueled vehicles is 1.2 miles per gallon.

AMFA provides that by December 31, 2001, the agency either extend the program beyond the 2004 model year or

[1] Congress did not apply either of these limitations to the incentive program for dedicated vehicles.

issue a notice of termination ending it at the close of that model year. An extension of up to four model years is authorized. If the program were extended, the maximum increase in CAFE attributed to the incentive would be limited to .9 miles per gallon in any of those model years.

AMFA further directs that NHTSA evaluate the dual-fuel incentive program and provide a report to Congress analyzing the success of the incentive program and preliminary conclusion regarding extension of the program beyond the 2004 model year.

NHTSA is proposing that the dual-fuel incentive program be extended by four years, i.e., through the end of the 2008 model year. We are proposing this extension for several reasons. Domestic energy security is more important than ever. The vehicles affected by the program operate on ethanol, a domestic fuel. To the extent that domestic fuels can be used, we can decrease our reliance on foreign petroleum. We recognize the potential value to domestic energy security of having a fleet of vehicles that can be operated on non-petroleum fuels. This value would be realized in times of petroleum shortages. We are mindful that the vehicle manufacturers would not likely maintain their current level of efforts to produce alternative fuel vehicles in the absence of the incentive program. As we recommend in our report to Congress that steps be taken to enhance the infrastructure, we want to maintain the program while efforts are made to identify and implement those steps. The proposed four-year extension would give Congress, other executive branch agencies, regional authorities, and the private sector ample time to identify, adopt and implement such steps. NHTSA is also concerned that an extension of less four years would not allow sufficient time to begin to realize the potential benefits from the operation of the dual fuel incentive program. For a variety of reasons, significant numbers of dual fuel capable vehicles have only recently begun to appear in the marketplace. It is, therefore, not yet clear whether the continuing presence of these vehicles, their ability to use alternative fuels, programs intended to increase the use and production of alternative fuels and other conditions will stimulate the expansion of the alternative fuel infrastructure as envisioned by Congress in creating the dual fuel incentive program. The development of a viable alternative fuel infrastructure, particularly one based on domestically produced ethanol fuel, would reduce the nation's dependence on imported oil. The realization of this significant benefit, in our view, may require nothing less than a full four-year extension of the incentive program.

In proposing this extension, we recognize that the incentive program, as it is now operating, potentially may be having some negative energy effects. By upwardly adjusting the calculated level of fuel efficiency of dual-fueled vehicles, the incentive program allows manufacturers to build less fuel efficient conventionally fueled vehicles without paying CAFE penalties. If manufacturers do so, have no other means of meeting CAFE standards in the absence of the incentive, and choose not to allow their CAFE to fall to the level where they would have to pay penalties, the incentive program provides a means for producing a less fuel efficient fleet. Under the foregoing conditions, if dual-fueled vehicles are operated almost exclusively on petroleum, the net impact is, in effect, to reduce the CAFE levels that are achieved by manufacturers and increase the consumption of petroleum. However, in order to conclude that the incentive program has a negative energy impact, one must make certain assumptions about the various actions that manufacturers may take in meeting CAFE, including the notion that manufacturers would not, in the face of increasing demand for less efficient vehicles, have simply chosen to pay CAFE penalties in order to meet that demand. As NHTSA has, until recently, been constrained from collecting data regarding manufacturer capabilities and any analysis of manufacturer capabilities and choices is necessarily complex, the agency cannot state with any certainty that the incentive program has, or will, have negative energy effects.

Any increased costs resulting from the operation of the incentive program must, if the program is to be extended, be offset by actual or potential benefits. As noted above, one such benefit is having a fleet of vehicles that can operate on alternative fuels. Use of alternative fuels by these vehicles reduces dependence on foreign oil and would help to lessen demand for conventional fuels, thereby helping to keep fuel prices low. If sufficient numbers of dual fuel vehicles exist and continue to spur development of an alternative fuel infrastructure, the nation would, to a degree, be insulated from the impacts of ''oil shocks'' resulting from sudden disruptions to the petroleum supply.

II. Background

A. Statutory Background

In 1988, Congress enacted the Alternative Motor Fuels Act (AMFA). Section 6 of that Act amended the fuel economy provisions of the Motor Vehicle Information and Cost Savings Act by adding a new section, section 513, providing incentives for the manufacture of vehicles designed to operate on alternative fuels, including dual-fueled vehicles. The section provides that incentive by establishing special procedures for calculating the fuel economy of those vehicles. These special procedures result in alternative fuel vehicles being assigned a higher fuel economy value for CAFE compliance purposes than they would have under the procedures used for calculating the fuel economy of other vehicles. Manufacturers choosing to build such vehicles can use the fuel economy of their alternative fuel vehicles to raise the calculated level of their CAFE.

Dual-fueled vehicles generally are vehicles that can operate either on alternative fuel and either gasoline or diesel fuel, or on natural gas and either gasoline or diesel fuel. Section 513(h) specifically defined a ''dual energy automobile'' as one that meets a minimum driving range and:

> (i) Which is capable of operating on alcohol and on gasoline or diesel fuel;
>
> (ii) Which provides equal or superior energy efficiency, as calculated for the applicable model year during fuel economy testing for the Federal Government, while operating on alcohol as it does while operating on gasoline or diesel fuel; [and]
>
> (iii) Which * * * provides equal or superior energy efficiency, as calculated for the applicable model year during fuel economy testing for the Federal Government, while operating on a mixture of alcohol and gasoline or diesel fuel containing exactly 50 percent gasoline or diesel fuel as it does while operating on gasoline or diesel fuel.

A ''natural gas dual energy'' automobile was defined as a vehicle that met a specified minimum driving range, and:

> (i) Which is capable of operating on natural gas and on gasoline or diesel fuel; [and]
>
> (ii) Which provides equal or superior energy efficiency, as calculated for the applicable model year during fuel economy testing for the Federal Government, while operating on natural gas as it does while operating on gasoline or diesel fuel.

The Energy and Policy Act of 1992 added new provisions to section 513. The definition of ''alternative fuel'' was expanded to include liquefied petroleum gas, hydrogen, liquid fuels derived from coal and biological materials, electricity and any other fuel

that the Secretary of Transportation determines to be substantially non-petroleum based and have environmental and energy security benefits. The 1992 Act also revised terminology by replacing ''dual energy'' and ''natural gas dual energy'' with ''alternative fueled vehicles'' in order to reflect the expanded list of fuels.

The 1988 AMFA amendments established the eligibility criteria and procedures for calculation of the incentive benefits. Manufacturers of alternative fuel vehicles that met the minimum driving range and energy efficiency criteria could use a special procedure for calculating the fuel economy of these vehicles for the 1993 through 2004 model years. The special calculation procedure substantially raises the fuel economy of the vehicle. For instance, a dedicated alternative fuel vehicle achieving 15 miles per gallon while operating on alcohol would, based on the special calculation procedures, be deemed to have a fuel economy of 100 miles per gallon.[2]

The special calculation procedure for alternative fuel dual-fueled vehicles is based on the assumption that those vehicles will operate 50 percent of the time on the alternative fuel and 50 percent of the time on conventional fuel, resulting in a fuel economy figure that is based on a harmonic average of alternative and conventional fuel. For example, an alternative dual-fueled model that achieves 15 miles per gallon operating on an alcohol fuel and 25 mpg on the conventional fuel would, based on the special calculation procedure, be calculated to have a CAFE fuel economy of 40 miles per gallon.[3]

The CAFE values for a natural gas alternative fuel vehicle are calculated in a similar fashion. For the purposes of this calculation, the fuel economy is equal to the weighted average of the vehicle fuel economy while operating on natural gas and the vehicle fuel economy while operating on either gasoline or diesel fuel. Section 32905(c) specifies the energy equivalency of 100 cubic feet of natural gas to be equal to 0.823 gallons of gasoline, with the gallon equivalent of natural gas to be considered to have a fuel content equal to 0.15 gallons of fuel.

Since alternative fuel vehicles will, for CAFE purposes, have a higher calculated fuel economy rating than their conventionally fueled counterparts, production of alternative fuel vehicles allows manufacturers to boost their CAFE ratings. The opportunity for raising a manufacturer's calculated CAFE through this incentive program is limited to 1.2 miles per gallon per model year for the 1993 through 2004 model years. If the program is extended beyond the 2004 model year, the CAFE increase is limited to 0.9 miles per gallon per model year.

Sections 32905(b) and (d) specify that the dual-fuel incentives apply to vehicles produced in the 1993 through 2004 model years. The incentives may, however, be extended. Section 32905(f) provides that the Secretary of Transportation shall, no later than December 31, 2001, either complete rulemaking to extend the incentive program for up to four more consecutive model years or issue a notice of termination ending it.

In anticipation of the decision regarding extension, section 32905(g) directed the Secretary, in consultation with the Secretary of Energy and the Administrator of the Environmental Protection Agency, to submit a report to Congress containing the results of a study of this alternative fuel vehicle mileage credit incentive policy and providing preliminary conclusions whether the program should be extended for up to an additional four (4) model years. In preparing this study and report, the Secretary is required to consider the following factors:

(i) [T]he availability to the public of alternative fueled automobiles, and alternative fuels;

(ii) Energy conservation and energy security;

(iii) Environmental considerations; and

(iv) Other relevant factors.

B. Report to Congress

In response to the directive in section 32905(g), NHTSA is submitting a report to Congress simultaneously with the issuance of this notice. This report, which contains the agency's findings regarding the impacts and effectiveness of the dual-fuel incentive program, was preceded by a request for comments that the agency published in the **Federal Register** on May 9, 2000 (65 FR 26805) (Docket No. NHTSA 2000–7087). The request for comments asked a number of questions regarding the impact of the incentive program on the production and development of dual-fueled vehicles, the costs of producing these vehicles, vehicle performance and reliability and the efforts made to market the vehicles. Other questions asked for information on future product plans for the production of dual-fueled vehicles, the impact that the incentives have had on the availability of alternative fuels, consumer awareness of alternative fuels, obstacles to alternative fuel use, potential modifications to the incentive program and whether the incentive program should be extended or discontinued.

The agency received comments from three automobile manufacturers—General Motors (GM), Ford Motor Company (Ford) and DaimlerChrysler (DC); five associations—Alliance of Automobile Manufacturers (Alliance), Renewable Fuels Association (RFA), National Ethanol Vehicle Coalition (NEVC), Clean Fuels Development Coalition (CFDC), and Ethanol Producers and Consumers (EPAC); one state agency—the Missouri Department of Natural Resources Energy Center (DNREC); the governors of New Mexico, Missouri, Kansas, and Wisconsin; Senators J. Robert Kerrey, Tom Daschle, Wayne Allard, Evan Bayh, John Ashcroft, Carl Levin, Charles E. Grassley, Christopher S. Bond, and Chuck Hagel; the Congressional Auto Caucus; and joint comments from the American Council for an Energy-Efficient Economy (ACEEE), Center for Auto Safety (CAS), the Sierra Club, and the U.S. Public Interest Research Group (USPIRG).

With the exception of the joint ACEEE—CAS—Sierra Club—USPIRG letter, all of the commenters voiced strong support for continuation of the incentive program from the end of the 2004 model year to the end of the 2008 model year. The supporting commenters unanimously indicated that the incentive program was primarily responsible for the development and production of alternative fuel vehicles in high volumes and was also responsible for the development of the existing refueling infrastructure. The comments also reflected a consensus that availability and price of alternative fuels continued to be the most significant obstacle to their use. Two commenters, DNREC and Governor Gary E. Johnson of New Mexico, indicated that extension of the incentive program is desirable for government entities that are required to purchase and use alternative fuel vehicles. DNREC and Governor Johnson both expressed concern that termination of the

[2] The fuel economy of dedicated vehicles is derived by computing the weighted average of fuel economy while operating on gasoline or diesel fuel and when operating on alternative fuel after dividing the alternative fuel economy by a factor of 0.15. In the example cited above, the equation is as follows: FE=(1/0.15)(15)=100.

[3] The fuel economy for an alternative dual-fueled model is calculated by dividing 1.0 by the sum of 0.5 divided by the fuel economy as measured on the conventional fuel and 0.5 divided by the fuel economy as measured on the alternative fuel, using the 0.15 volumetric conversion factor. For example, an alternative dual-fueled model that achieves 15 miles per gallon operating on an alcohol fuel and 25 mpg on the conventional fuel would have its CAFE fuel economy calculated as follows: 1/((0.5/25)+(0.5/100))=40 miles per gallon.

incentive program could impact the price and availability of alternative fuel vehicles and of the fuels that these vehicles use.

The joint ACEEE—CAS—Sierra Club—USPIRG letter opposed any extension of the incentive program. These commenters indicated that the incentive program had not resulted in any expansion of alternative fuel infrastructure. In their view, the primary impact of the incentive program was to allow manufacturers to produce less fuel-efficient vehicles. Based on this assessment, the signatories to the letter indicated that the incentive program increased petroleum consumption and increased emissions. They further urged that the incentive program be terminated unless availability of the incentive could actually be linked to alternative fuel consumption.

Ford, GM, DC, and the Alliance all indicated that the existence of the incentive program had a major influence on decisions by some vehicle manufacturers to produce dual-fueled vehicles in high volumes. Ford and DC indicated that they offered dual-fueled vehicles at no additional cost to consumers, while GM indicated that pricing was subject to a large number of factors. All three of these manufacturers indicated that present technology allowed production of reliable and usable dual-fueled vehicles. However, DC noted that alcohol fuels presented problems with starting in low temperatures. GM observed that early alcohol fuels presented corrosion problems. RFA indicated its belief that performance of dual-fueled vehicles operating on alternative fuels could be improved by tuning the engine management system to use these fuels more efficiently. The Alliance and each manufacturer also indicated that continued production of alternative fuel vehicles would be a part of their efforts to meet the CAFE standards and that such production would be adversely affected by termination of the incentive program.

Following consideration of the comments and other data, NHTSA issued its report. The agency's report indicates that the dual-fuel incentive program has had a positive impact on the production and availability of dual-fueled vehicles. However, the increased availability of these vehicles has not stimulated any meaningful growth in the availability and use of the alternative fuels used in dual-fueled vehicles. Few dual-fueled vehicles are being operated on alternative fuels. Since the incentive program rewards manufacturers for producing qualifying vehicles through an upward adjustment of their fleet fuel economy, the primary effect of the program, if manufacturers produced less fuel efficient vehicles only because the incentive program allowed them to do so, has been to increase petroleum consumption without producing a corresponding increase in the availability or use of alternative fuels (Report to Congress: Effects of the Alternative Motor Fuels Act CAFE Incentives Policy, Executive Summary (hereinafter cited as Report)).

The report finds that, by the end of the 2000 model year, the population of dual-fueled alternative fuel vehicles had increased to over 1.2 million vehicles. This growth, including 115,000 passenger cars and 1,077,000 light trucks using E85 ethanol fuel, occurred in less than five years (Report, Sec. III). By 2000, close to 8 percent of all new light trucks were dual-fueled vehicles as compared to virtually no dual-fueled light trucks two years before. About 1.4 percent of passenger cars produced in the 2000 model year were dual-fueled vehicles (compared to .025 percent in 1993) (Report, Sec. III). As the number of dual-fueled vehicles increased, the manufacturers building these vehicles grew closer to gaining the maximum CAFE increase permitted under the incentive program. For the 2000 model year, both Ford and DaimlerChrysler approached the 0.9-mpg maximum benefit level that would be allowed if the dual-fueled vehicle CAFE credit provision were extended. Similarly, GM increased its production of dual-fueled vehicles in order to benefit from the incentive program (Report, Executive Summary).

The agency's report finds that the increased production of dual-fueled vehicles had stimulated some growth in the use and availability of alternative fuels. NHTSA found that alternative fuel use in alternative fuel vehicles in the U.S. has been rising over the past decade. In 1992, a total of 230 million gasoline gallon equivalents of alternative fuel were used in alternative fuel vehicles; for 2000, that number is projected to rise to 368 million gasoline gallon equivalents, or an increase of roughly 6 percent per year. In comparison, the highway use of gasoline and diesel increased roughly 2 percent per year. However, alternative fuel use only accounts for 0.23 percent of total highway fuel use.

One factor limiting greater expansion of alternative fuel use is the availability of alternative fuels. As of May 2001, there were 5,236 alternative fuel refueling sites, with sites in all 50 states (Report, Sec. IV). Of the existing alternative fuel refueling stations, the vast majority offered liquefied petroleum gas (LPG). Natural gas refueling sites—1,217 compressed natural gas (CNG) and 44 liquefied natural gas (LNG)—had increased from 1,065 CNG refueling sites in 1995. The number of ethanol refueling sites, which provide the E85 fuel used in most dual fuel vehicles, had grown to 121 from 37 in the five years from 1995–2001. In the same period, the number of methanol (M85) refueling stations dropped from 105 to 37 as the number of M85 flexible-fuel vehicles decreased. (Report, Sec. IV).

Our report indicates that despite the fact that the incentive program had led to sales of more than one million ethanol flexible-fuel vehicles through the 2000 model year, the small number of E85 stations and the limited amount of E85 produced strongly suggest that these vehicles were being operated almost exclusively on gasoline.

The report also notes that conducting an assessment of the energy and environmental impacts of the incentive program is complicated by uncertainty about the behavior and capabilities of vehicle manufacturers. While the use of alternative fuels can reduce petroleum consumption and greenhouse gas emissions, the energy consumption and environmental impacts cannot be determined with any reasonable amount of certainty because it is difficult to determine what manufacturers would have done in the absence of the credit incentive.

In an effort to evaluate the effects of the incentive program up to the year 2000, the Environmental Protection Agency (EPA), performed an analysis comparing a baseline case in which no incentive program existed with a case where the incentive program was in place. In the incentive program case, it was assumed that one percent of the fuel used by dual-fueled vehicles during the years from 1996 to 2000 was an alternative fuel. The model also assumed that the enhanced fuel efficiency of dual-fueled vehicles resulting from application of the CAFE incentive allowed manufacturers to produce fewer fuel efficient conventional vehicles and still meet the CAFE standards and avoid civil penalties. Estimates were made of both conventional and alternative fuel use, total motor fuel consumption, and greenhouse gas emissions. These estimates were compared to the baseline analysis, in which the absence of an incentive program or consumer demand for lower mpg vehicles compelled manufacturers to make more fuel-efficient conventional vehicles. A comparison of the two models indicated that when dual-fueled vehicles are only

operated on alternative fuel one percent of the time, the incentive program increases the consumption of petroleum in two ways. First, dual-fueled vehicles operating on petroleum consume petroleum themselves. Second, the production of the dual-fueled vehicles allows manufacturers to build less efficient petroleum fueled vehicles than they would without the incentive program. Through 2000, the CAFE incentives policy was estimated to have resulted in an increase in alternative fuel use (almost all E85) and a slight increase in gasoline consumption (about 1 percent)(Report Sec. V).

The analysis also attempted to predict the effect of an extension of the incentive program on the environment and energy consumption. The effects of extending the CAFE credit to 2008 under four basic scenarios were evaluated under the assumption that manufacturers would continue to be constrained by CAFE and choose not to build less efficient vehicles and pay CAFE penalties in response to consumer demand. Two different production rates for flexible-fuel vehicles were considered: One based on a maximum benefit of 0.9 mpg and, due to a then pending legislative proposal to amend the existing limit, one based on 1.2 mpg. Two different rates of E85 fuel consumption were then considered under the aforementioned two production rates (one based on the current rate of about 1 percent and one based on a steady increase in use from the current 1 percent to 50 percent in 2008) in an attempt to bound the range of possible outcomes. All four scenarios would result in increases in petroleum use and greenhouse gases if the incentive program were extended to 2008. The analysis also considered additional scenarios under which flexible-fuel vehicles would use E85 an average of 50 percent of the time and 100 percent of time). In the 50 percent case, petroleum consumption would not increase if the credit were extended to 2008. However, the amount of greenhouse gases produced would still increase, if the credit were extended, compared to the option of allowing the program to expire in 2004. If flexible-fuel vehicles used E85 100 percent of the time, petroleum consumption would decline, although greenhouse gases would still increase. The increase in greenhouse gases in both cases would stem from the overall increase in petroleum use by conventional vehicles allowed by the incentive program and the fact that flexible-fuel vehicles burning E85 would still generate some greenhouse gas emissions (Report Sec. V).[4]

The preceding analysis assumes that in the absence of the incentive program, manufacturers would not have produced larger, less fuel efficient vehicles. It is also possible that manufacturers might have responded to strong consumer demand for performance and utility and produced the same vehicles without the provision as they did with it. In this case, manufacturers would have chosen to pay civil penalties rather than meet the CAFE standard. Under this scenario, the main effect of the program has been to greatly expand the population of vehicles that have the potential to use alternative fuels.

In assessing the dual-fuel incentive program, the report finds that the credit program has been successful in stimulating a significant increase in the availability of alternative fuel vehicles. The existence of the incentive program was a major factor in the development and production of alternative fuel vehicles in high volumes. The existence of these vehicles has not, however, stimulated a corresponding increase in the availability of alternative fuels. The report also finds that the nation's limited capacity for producing E85 fuel could be further limited by the possibility that a gasoline additive, Methyl Tertiary-Butyl Ether (MTBE), could be replaced by ethanol. This would further constrain any future expansion of E85 use. Given the slow rate of growth in the alternative fuel infrastructure, the report states that if the incentive program were used by manufacturers to meet CAFE standards in lieu of producing more efficient vehicles, energy conservation and environmental benefits will only be realized through the extension of the incentive provisions if other incentives, programs, or market conditions stimulate the production, distribution, and use of E85 fuel. Therefore, the agency's report indicates that a number of other actions might be considered to improve the program and its chances for success.

Specific actions by Congress or others might include any or all of the following:

(1) Examine alternatives to the current dual-fuel vehicle CAFE credit program structure, such as linking the CAFE credit to actual alternative fuel used;

(2) Develop, implement, and evaluate policies, regulations, or programs to promote the actual use of alternative fuels by consumers; and

(3) Develop, implement, and evaluate policies and programs that facilitate more rapid expansion and use of the alternative fuel infrastructure. Such policies and programs should be evaluated, taking into account the availability of alternative fuel and other potential transportation uses for each fuel.

In view of the nation's energy security interests, it is important to increase alternative fuel capability throughout the fleet. Given the mixed results of the program to date, it would be prudent for Federal agencies, Congress, industry, and other interested stakeholders to identify additional programs and authorities that could contribute to achieving greater use of alternative fuels in dual-fuel vehicles that receive the CAFE credit.

C. Other Developments

In the last year, several events have transpired related to CAFE and the credit incentive provision. These are summarized below.

On May 17, 2001, the Energy Policy Development Group, led by Vice President Dick Cheney, issued its National Energy Policy. This report made recommendations to President Bush regarding the path that the administration's energy policy should take and included specific recommendations regarding vehicle fuel economy and CAFE. The report recommends that the President direct the Secretary of Transportation to

- Review and provide recommendations on establishing CAFE standards with due consideration of the National Academy of Sciences study to be released in July 2001. Responsibly crafted CAFE standards should increase efficiency without negatively impacting the U.S. automotive industry. The determination of future fuel economy standards must therefore be addressed analytically and based on sound science.
- Consider passenger safety, economic concerns, and disparate impact on the U.S. versus foreign fleet of automobiles.
- Look at other market-based approaches to increasing the national average fuel economy of new motor vehicles.

The Energy Policy Development Group also stated in its report that ethanol vehicles offer tremendous potential if ethanol production can be expanded. Additionally, the report states that, ''a considerable enlargement of ethanol production and distribution capacity would be required to expand beyond their current base in the Midwest in order to increase use of ethanol-blended fuels.''

Like the appropriations acts for the preceding five years, the fiscal year 2001 DOT Appropriations Act included the rider prohibiting the Department from revising the CAFE standards. However it

[4] This analysis assumes that, in the absence of the dual-fuel incentive, manufacturers would produce more efficient vehicles to meet the CAFE standards, rather than pay civil penalties.

also included a provision directing the Department to fund a National Academy of Sciences study on the effectiveness and impacts of CAFE standards. On July 30, 2001, the National Academy of Sciences released a preliminary report entitled, ''Effectiveness and Impact of Corporate Average Fuel Economy (CAFE) Standards.'' This report included 15 findings and seven recommendations. Recommendation 5 stated that, ''Credits for dual-fuel vehicles should be eliminated, with the provision that NHTSA's notice of such action provides enough lead-time to limit adverse impacts on the automotive industry.''

On August 2, 2001, the U.S. House of Representatives passed H.R. 4, which is entitled the Securing America's Future Energy (SAFE) Act of 2001. This bill, which has been placed on the Senate legislative calendar, includes provisions in Section 203, Dual Fueled Automobiles, which alter the AMFA CAFE credit incentive program by extending it for an additional four model years to 2008 and by extending the 1.2 mpg limitation on the maximum allowable CAFE credit that can be earned by a specific manufacturer's fleet through model year 2008 as well. The deadline for making a decision whether to extend the program beyond 2008 would be December 31, 2005, with the report on the effects of the program due on September 30, 2004.

In July 2001, Secretary Mineta sent a letter to Congress asking that the freeze on CAFE standards be lifted immediately so NHTSA could resume its CAFE rulemaking responsibilities. However, the freeze was not lifted until December 2001, when the Appropriations Act for the Department of Transportation, for the first time in six years, did not include a rider freezing CAFE standards. NHTSA immediately resumed its CAFE rulemaking responsibilities. The FY 2003 DOT budget request includes $1,000,000 to support CAFE program activities to meet those responsibilities.

D. U.S. Dependence on Imported Petroleum

The United States met 15 percent of its oil needs in 1955 through imports. The import share reached 36.8 percent by 1975, the year CAFE standards were authorized by Congress, and then peaked at 46.4 percent in 1977. Although the share declined to below 30 percent in the mid-1980's, lately, the United States has again become increasingly dependent on imported oil. Imports totaled 43.6 percent in 1992 and are anticipated to be at or over 50 percent in 2001. The Middle East controls about 65 percent of the world's oil reserves and about 35 percent of the world's natural gas reserves. North American reserves of oil amount to just 6–7 percent of world reserves, and the Department of Energy estimates that the U.S. will import 62 percent of its oil by the year 2010. Since the petroleum ''shocks'' of the 1970s, the inflation-adjusted price of crude oil has generally declined. Since the oil shocks of the 1970s several events combined to keep oil prices low: the end of the Cold War; a diminution in the market power of OPEC due to an increase in petroleum production from non-OPEC nations; and the cementing of U.S. security ties to the most important oil-exporting nations. The growing dependence of the U.S. on imported petroleum offsets the positive developments that have occurred in the global petroleum market over the past 20 years and the potential impact of a petroleum shock on the U.S. is growing.

The transportation sector remains overwhelmingly dependent on petroleum-based fuels and on technologies that provide virtually no flexibility for employing alternative to petroleum. Transportation currently accounts for approximately two-thirds of all U.S. petroleum use and roughly one-fourth of total U.S. energy consumption. Highway transportation petroleum consumption has risen from 121 billion gallons per year in 1979 to 155 billion gallons per year in 1999 (28 percent over 20 years). Given the dependency of our nation's transportation network on petroleum use, substitution of conventional petroleum fuels by non-petroleum-based fuels, including alternative fuels, could reduce America's vulnerability to disruptions in petroleum supply.

Increased use of alternative fuels can yield other economic benefits as well as improving the nation's energy security. Displacing petroleum with alternative and replacement transportation fuels helps hold down petroleum prices in two ways. First, reducing the demand for petroleum decreases the world price for oil—a 1 percent decrease in U.S. petroleum demand could, in the long term, reduce world oil price by about 0.5 percent. Short-run impacts could be even greater, due to the short-run inelasticity of oil supply and demand. An additional benefit of increased alternative or replacement fuel use is the potential to reduce the impact of a supply shortage on prices. As evidenced in the industrial and utility sectors, the existence of alternatives to oil provides potential substitutes for oil in the event of a production cutback. Since it is precisely the non-responsiveness of transportation oil demand to oil production cutbacks that makes oil price shocks possible, increasing competition for oil by using alternative fuels reduces the ability of oil suppliers to constrain supply in order to increase the price of oil.

E. Availability and Use of Alternative Fuels

Alternative fuel use in the U.S. has grown significantly since the passage of AMFA alternative fuel incentives. In 1992, alternative fuel use in the U.S. amounted to 230 million gasoline gallon equivalents; in 2000, alternative fuel use is estimated to be 368 million gasoline gallon equivalents, an overall increase of 60 percent. With the exception of methanol and E95 blend ethanol, all of the alternative fuels in use have seen notable increases in use between 1992 and 2000. An increasing number of CNG and LNG vehicles are available from original-equipment manufacturers and electricity has also enjoyed a large increase, due to the OEM offerings of electric vehicles in the Southwest. Alternative fuel use in alternative fuel vehicles has been rising at a rate three times faster than the total highway use of gasoline and diesel. Nonetheless, alternative fuel use only accounts for 0.23 percent of total highway fuel use.

The National Energy Policy Development Group, in its May 17, 2001, report on the National Energy Policy states that, ''The lack of infrastructure for alternative fuels is a major obstacle to consumer acceptance of alternative fuels and the purchase of alternative fuel vehicles.'' The lack of infrastructure is one of the main reasons why most alternative fuel vehicles actually operate on petroleum fuels. As the report noted, ''ethanol vehicles offer tremendous potential if ethanol production can be expanded.'' However, the report also states that, ''a considerable enlargement of ethanol production and distribution capacity would be required to expand beyond their current base in the Midwest in order to increase use of ethanol-blended fuels.''

The National Renewable Energy Laboratory reports that there are 5,236 alternative fuel refueling sites as of May 2001, with alternative fuel refueling sites in all 50 states. Unfortunately, while most dual-fuel vehicles use ethanol as an alternative fuel, less than three percent of U.S. alternative fuel refueling stations sell ethanol. As of May 2001, there were 121 public E85 refueling outlets in operation, up from 37 in 1995. For LPG, the most widely available alternative fuel, although it has availability in all states, there are only 3,270 outlets in the U.S. For other

gaseous alternative fuels, there are 1,237 Compressed Natural Gas (CNG) outlets in the U.S and 44 Liquified Natural Gas (LNG) refueling sites.

The Federal government, specifically DOE, the General Services Administration and the Department of Agriculture are involved with efforts to promote the use and expansion of alternative fuels and the alternative fuel infrastructure. A major focus of these efforts is the development of different feedstocks for ethanol and on partnerships that result in the expansion of the ethanol fuel infrastructure. DOE administers the Clean Cities Program, the Office of Fuels Development (OFD) alternative fuel program, and, in conjunction with the General Services Administration (GSA), the Federal AFV USER Program. Efforts by DOE are underway in Minnesota to help construct a number of ethanol refueling sites. In August 2001, the USDA announced that its agencies will use ethanol fuels in their fleet vehicles where practicable and reasonable in cost.

As ethanol fuels are generally more expensive than gasoline, cost remains an impediment to the more widespread demand that would stimulate development of the necessary infrastructure. Although the trend in alternative fuels is in the direction of E85 use, the infrastructure has been slow to develop because these vehicles also use conventional fuel. However, even if relatively few of these vehicles are actually being operated on E85, the existence of a dual fuel capable fleet could spur an increase in the number of E85 refueling sites, and provide consumers an alternative if there are gas shortages or gas prices increase significantly. The small number of outlets available today points out the need to intensify the E85 refueling infrastructure. In addition, it is safe to say that many people who have purchased flexible-fuel vehicles do not know they could use E85. More public education in areas where E85 refueling stations exist is needed to inform people so that they are aware they can use E85.

Future alternative fuel use may be affected by supply as well as demand. Water quality concerns involving the use of MTBE and the rapidly increasing number of E85 flexible-fuel vehicles may, if ethanol production is diverted to the production of an MTBE substitute, lead to insufficient ethanol to meet demand. Current ethanol supply capacity, as well as that represented by ethanol plants now planned or under construction, indicates that domestic ethanol production is now about 1.72 billion gallons per year. Plants under construction can add another 123 million gallons per year, and plants in the engineering and planning stages can add another 149 million gallons per year. If all the present and building plants are producing ethanol as planned in 2003, total ethanol production capacity that year will be about 1.99 billion gallons of ethanol per year. Capacity in 2010 could reach 2.6 billion gallons per year. However, if MTBE is banned as a gasoline additive and fuel producers replace MTBE with ethanol, it is uncertain if there will be enough refinery capacity to both replace MTBE and to fuel flexible-fuel vehicles a substantial portion of the time with E85.

III. Agency Proposal

Section 32905(f) directs NHTSA to take one of the following actions on or before December 31, 2001: Either complete a rulemaking extending the dual-fuel incentive program or issue a notice of termination ending it. The agency's ability to extend the program is not unlimited—it may only extend the incentives for Anot more than 4 consecutive model years immediately after model year 2004 * * *.''

On December 31, 2001, NHTSA issued a notice of intent to issue a notice of proposed rulemaking that was published in the **Federal Register** on January 7, 2002 (67 FR 713). In that notice, the agency explained that it was providing notice of its intention to issue a notice of proposed rulemaking to extend the dual fuel incentive program from one to four years.

The agency is proposing to extend the dual-fuel incentive program for four model years, from the 2005 through the 2008 model years. NHTSA has tentatively concluded that extension of the dual-fuel incentive program for four model years would be appropriate and consistent with the goals of both the incentive program and the CAFE program as a whole.

The dual-fuel incentive program, which envisions a reduction in petroleum dependence through the development of alternative fuels, accepts an interim increase in the consumption of petroleum fuels in pursuit of that end. When Congress conceived the incentive program, it was aware of the risk that manufacturers would avail themselves of gains in fleet fuel economy by building dual-fueled vehicles regardless of whether the vehicles ever used an alternative fuel. Concern about this possibility and the increase in the use of petroleum that could result, led to the enactment of two limits on the incentive program. One of these limits, now at issue, was to make the incentive available for the 1993–2004 model years, with the possibility of an extension of up to four model years, i.e., through the 2008 model year. The other limit was to place a cap of 1.2 mpg on the maximum increase in fleet fuel economy available from the use of the incentives for the 1993–2004 model years and 0.9 mpg for any of the model year(s) to which the program was extended by NHTSA. The existence and nature of these limits indicates that Congress understood that the incentive program could result in increased petroleum use, that any increases in petroleum use would be limited to the life of the program, and that, if the program were extended, that the extent of increased petroleum use would be controlled.

The existence of the dual-fuel incentives has spurred a large increase in the production of these vehicles in recent years. Technologies have been developed to the degree that dual-fueled vehicles are as reliable and as useful as their conventionally fueled counterparts. Fleet operators and others with access to gaseous fuels are, to a limited extent, using gaseous dual-fueled vehicles. Liquid fueled dual-fueled vehicles capable of operating on E85 or gasoline are being produced in significant numbers. These E85 vehicles may use either gasoline or E85 interchangeably with no input required from the vehicle operator, save the selection of the fuel to be used when filling the tank. With the exception of decreased range resulting from the slightly lower energy content of E85, a liquid dual-fueled vehicle performs as well on E85 as it does on gasoline.

Production of E85 vehicles steadily increased through the 2000 model year, but slightly decreased in the 2001 model year, as dual-fuel technology has matured and manufacturers rely on the incentives to assist them in meeting CAFE requirements. For example, no liquid fuel dual-fueled light trucks were produced in 1997. However, over 1.4 million dual-fueled light trucks were produced in the 1998—2001 model years. In the 2000 model year, close to 7.6 percent, and in the 2001 model year, 4.6 percent of all light trucks produced were dual-fueled vehicles. About 1.4 percent of passenger cars produced in the 2000 model year and 0.8 percent produced in the 2001 model year were dual-fueled vehicles (compared to .025 percent in 1993). As of the 2001 model year, 217,000 E–85 dual-fueled passenger cars and 1,446,000 E–85 dual-fueled light trucks had been produced. Comments submitted in response to the agency's request for information prior to preparation of NHTSA's report to Congress indicate that manufacturers

plan to produce increasing numbers of dual-fueled vehicles as part of their overall strategy for meeting CAFE requirements.

NHTSA notes that almost all of the dual-fueled vehicles produced in the U.S. have been built since the 1997 model year. While the incentive program has been in place since the 1993 model year, manufacturer efforts in the first several years of the incentive program were primarily directed at the development of methanol-fueled (M85) vehicles. While these efforts met with some success, methanol's corrosive properties, problems with the quality of methanol fuels and increased demand for methanol in conventional fuel additives led to a change in direction toward the development and production of ethanol (E85) vehicles. The first production E85 dual-fueled vehicles appeared in the 1998 model year and are the only vehicles that have been produced in significant quantities since the inception of the incentive program.

In terms of stimulating dual-fueled vehicle production, the incentive program appears to be meeting the expectations of Congress. Reliable dual-fueled vehicles that perform well while operating on an alternative fuel are becoming available in increasing numbers. In some instances, manufacturers are producing enough dual-fueled vehicles to enable them to obtain close to the maximum benefit under the incentive. Although these vehicles, the vast majority of which are E85 dual-fueled vehicles, have only begun to be produced in significant numbers, the comments submitted in response to NHTSA's May 9, 2000 request for comments indicate that the incentive program is the principal impetus for their development and manufacture. The incentive program has therefore begun to satisfy one component of AMFA's overall goal of encouraging the development of alternative fuel vehicles.

The success of the incentive program in stimulating the production of vehicles has not yet resulted either in increased demand for alternative fuels or a corresponding increase in availability of these fuels. Despite the presence of approximately 1.7 million E85 capable dual-fueled vehicles in the U.S. fleet, owners of these vehicles are unlikely to be able to use E85 fuel, particularly if they live in one of the 32 states without any E85 fuel stations. At present, there are less than 140 E85 stations in the U.S. The majority of these stations are located in the Midwestern and north central states with 60 stations in Minnesota, 13 in Illinois, 10 in Iowa, 8 in Michigan, 7 apiece in South Dakota, Nebraska and Kentucky and 5 in Missouri.[5] While the number of E85 stations has increased during the course of the incentive program, the growth that has occurred has not yet resulted in a degree of expansion suggesting that E85 is likely to serve as a viable alternative to petroleum fuels in the near future.

In one sense, the lack of development of an alternative fuel infrastructure is indicative of the technology and marketing of dual-fueled vehicles. Dual-fueled vehicles perform as well when operated on gasoline as conventionally fueled vehicles. It is possible that owners of these vehicles often remain unaware that the vehicle can be operated on an alternative fuel or, in those areas where alternative fuel is available, where they can purchase alternative fuel. Although some manufacturers have made efforts to improve owner awareness of the unique capability of these dual-fueled vehicles, the fact remains that the dual-fuel capabilities of these vehicles are often not well known.

Owner unawareness of dual-fuel capability is not the only obstacle to increased alternative fuel use. As noted above, there are presently very few E85 stations in the United States. Even in those locations where E85 is available, it has not historically been price competitive with gasoline, particularly when the price is adjusted to reflect E85's lower energy content. The lower energy content of E85 also results in a slight reduction in driving range when compared with gasoline. Those consumers who are aware of their vehicle's ability to use an alternative fuel most likely will not choose to use alternative fuels unless they are more attractive than gasoline.

Development of an alternative fuel infrastructure is also dependent on the supply of alternative fuels. As noted above, current ethanol production in the United States is approximately 1.7 billion gallons per year. As that capacity increases, ethanol production is projected to reach approximately 2 billion gallons per year. A substantial percentage of this production capacity is used to produce additives for conventional gasoline or to produce gasohol (90 percent gasoline/10 percent ethanol). As NHTSA notes in its report to Congress, about 400 million gallons of ethanol were available for use in E85 fuel for dual-fueled vehicles in 2000. The agency also notes that it anticipates that the amount of ethanol available for E85 dual-fueled vehicles would rise to approximately 1 billion gallons in 2010.

Future availability of ethanol for the E85 fuel used by most dual-fueled vehicles is further complicated by changes in the formulation of petroleum fuels. Much of the ethanol produced now is used for conventional fuel additives. This use may increase dramatically due to concerns about methyl tertiary butyl ether (MTBE). MTBE is an additive that has been used in U.S. gasoline as an octane enhancer since 1979. Because MTBE use in gasoline reduces certain emissions, it has been used in higher concentrations since 1992 in certain geographic areas to fulfill the oxygenate requirements set by Congress in the 1990 Clean Air Act Amendments. Recent concerns about MTBE in groundwater resulting from leaking underground storage tanks has led to a reexamination of policies regarding its use.

While a variety of approaches are being considered, there is a possibility that the use of ethanol as an MTBE substitute may spur a substantial increase in demand for ethanol. If this were to occur, the increased demand for ethanol as an additive might restrict the availability of ethanol as a fuel until production capacity is increased. However, once the demand for ethanol-based additives stabilized, the increased production capacity might make more ethanol available as fuel. NHTSA is concerned that the increased demand for ethanol additives might restrict the availability of ethanol fuel, particularly in the next few years. As temporary shortages of ethanol might impact the success of the incentive program in the near term, NHTSA believes that a full four-year extension of the program might be necessary to allow ethanol production to grow sufficiently to meet the demand for additives to petroleum fuel and ethanol fuel itself.

The agency's proposal to extend the incentive program for four years is an attempt to reconcile the promise of an increasingly large fleet of dual-fueled vehicles with the constraints preventing the development of the dual-fuel infrastructure envisioned by Congress. The existence of the incentive program has provided considerable impetus to the development and refinement of both gaseous and liquid fueled dual-fueled vehicles. After efforts in the early years of the incentive program revealed technological barriers to practical methanol fueled vehicles, industry efforts turned to the development of ethanol capable vehicles. The maturation of ethanol capable dual-fueled vehicle technology did not occur until well after the incentive program

[5] A list of alternative fuel stations maintained by the Department of Energy may be accessed at http://www.afdc.nrel.gov/refueling.html.

began in the 1993 model year. As dual-fueled vehicle production has only recently begun to result in significant numbers of dual-fueled vehicles in actual use, NHTSA believes that that termination of the incentive program before the end of the 2008 model year would be premature. The added numbers of dual-fueled vehicles now in use, in combination with those that will be produced in the 2002 through 2008 model years, may spur increased consumption and availability of alternative fuels. In addition, the Federal government, and specifically DOE, the General Services Administration and the Department of Agriculture are involved with efforts to promote the use and expansion of alternative fuels and the alternative fuel infrastructure. These programs may also bear fruit in the form of increased alternative fuel use. Unfortunately, NHTSA does not now have the opportunity to wait and examine the impact these vehicles may have.

The agency's tentative decision to extend the incentive program for four years is based on its assessment that the energy and other costs of the incentive program are justified by the potential benefits. We are unable to predict with certainty how much alternative fuel use, which is a critical element to the realization of benefits, will increase.[6] Adoption of the proposed four-year extension entails a risk that manufacturers might be producing dual-fuel vehicles that operate only on petroleum fuel. On the other hand, if the agency were to allow the program to terminate, there would be an equal risk that late-blooming alternative fuel technology and production would be wasted and the opportunities for eventual reductions in petroleum use would be lost. A four-year extension is, in NHTSA's view, a reasonable reconciling of those risks. Such an extension will provide opportunities for further development of measures to encourage alternative fuel use and, if those policies are successful, result in the development of a domestic fuel supply and infrastructure with either little or no increase in petroleum use. As noted above, the maximum incentive benefit available in the 2005 through 2008 model years is an 0.9 mpg increase in a manufacturer's fleet average. This limitation on the maximum benefit modifies the impact of the incentive program's special fuel economy calculation for dual-fueled vehicles. Manufacturers will be required to increase the efficiency of their conventionally fueled fleet to make up for the reduction in the dual-fuel incentive. If alternative fuel use has not increased, the 0.9 mpg cap will restrict the negative impacts of the incentive program.

[6] Many of those responding to NHTSA's May 9, 2000 request for comments suggested that a number of measures be implemented to make alternative fuels more attractive to consumers. These suggested measures, which included reductions in fuel taxes on alternative fuels, tax credits for alternative fuel use or alternative fuel vehicles and other market incentives, are initiatives that are beyond NHTSA's authority.

IV. Benefits and Costs

In the preliminary economic assessment, the agency examined two scenarios examining the impact of extending the incentive program on consumers by projecting the increased fuel costs resulting from less efficient conventionally fueled vehicles being available in the marketplace. One scenario, scenario 1, is based on the 2001 model year combined fuel economy of GM, Ford, and Daimler/Chrysler light trucks of 20.07 mpg. Scenario 1 examined the 2001 model year fuel economy for these manufacturers without operation of the incentive and with the incentive in place. (20.52 mpg versus 20.07 mpg.) As the incentive program allows the production of less fuel efficient vehicles, the lower average fuel economy will result in the average light truck purchaser's vehicle consuming more fuel (on average 308 gallons) over its lifetime and costing $129 more (present discounted value) to operate in fuel over the vehicle's lifetime. Scenario 2 examined the potential credit of 0.9 mpg that could be taken during the extension years, so it compared 20.97 mpg versus 20.07 mpg. From a light truck purchaser's perspective, the lower average fuel economy will result in their vehicle consuming more fuel (on average 411 gallons) over its lifetime and costing $244 more (present discounted value) to operate in fuel over the vehicles' lifetime.

Scenario 1 could result in an additional 1.7 billion gallons of gasoline being used over the lifetime of one model year's fleet of light trucks at a present discounted value of $727 million. Scenario 2 could result in an additional 2.3 billion gallons of gasoline being used over the lifetime of one model year's fleet of light trucks at a present discounted value of $1,375 million.

Because there are a variety of ways to improve fuel economy, and our ability to collect and analyze data had been restricted under the CAFE freeze for the preceding six fiscal years, we are unable at this time to determine what are the benefits to the light truck purchaser to offset the increase in fuel costs. The light truck purchaser may get more choices of large light trucks and sport utility vehicles in the market, perhaps the ability to choose a larger engine, or perhaps savings in initial vehicle prices if weight reductions due to material substitutions, or fuel economy technologies are not added to the vehicle. It is entirely possible that the value vehicle purchasers place on these attributes exceeds the cost of the extra gasoline these vehicles use.

V. Rulemaking Notices and Analyses

A. Executive Order 12866 and DOT Regulatory Policies and Procedures

Executive Order 12866, ''Regulatory Planning and Review'' (58 FR 51735, October 4, 1993), provides for making determinations whether a regulatory action is ''significant'' and therefore subject to Office of Management and Budget (OMB) review and to the requirements of the Executive Order. The Order defines a ''significant regulatory action'' as one that is likely to result in a rule that may:

(1) Have an annual effect on the economy of $100 million or more or adversely affect in a material way the economy, a sector of the economy, productivity, competition, jobs, the environment, public health or safety, or State, local, or Tribal governments or communities;

(2) Create a serious inconsistency or otherwise interfere with an action taken or planned by another agency;

(3) Materially alter the budgetary impact of entitlements, grants, user fees, or loan programs or the rights and obligations of recipients thereof; or

(4) Raise novel legal or policy issues arising out of legal mandates, the President's priorities, or the principles set forth in the Executive Order.

This proposal is economically significant. While the proposal does not require the production of alternative fuel vehicles, it allows manufacturers producing dual-fuel vehicles to produce less efficient conventionally fueled vehicles. The impact of the production of these less efficient vehicles may result in additional annual fuel costs of more than $100 million. Accordingly, it was reviewed under Executive Order 12866. The rule is also significant within the meaning of the Department of Transportation's Regulatory Policies and Procedures.

Because this proposed rule is economically significant, the agency has prepared a Preliminary Economic Analysis (PEA). This analysis is summarized above in the sections on Benefits and Costs. The PEA is available

in the docket and has been placed on the agency's website along with the proposal itself.

B. Regulatory Flexibility Act

Pursuant to the Regulatory Flexibility Act (5 U.S.C. 601 *et seq.*, as amended by the Small Business Regulatory Enforcement Fairness Act (SBREFA) of 1996), whenever an agency is required to publish a notice of rulemaking for any proposed or final rule, it must prepare and make available for public comment a regulatory flexibility analysis that describes the effect of the rule on small entities (*i.e.*, small businesses, small organizations, and small governmental jurisdictions). The Small Business Administration's regulations at 13 CFR part 121 define a small business, in part, as a business entity ''which operates primarily within the United States.'' (13 CFR 121.105(a)). No regulatory flexibility analysis is required if the head of an agency certifies the rule will not have a significant economic impact on a substantial number of small entities. SBREFA amended the Regulatory Flexibility Act to require Federal agencies to provide a statement of the factual basis for certifying that a rule will not have a significant economic impact on a substantial number of small entities.

NHTSA has considered the effects of this proposed rule under the Regulatory Flexibility Act. I certify that this proposed rule would not have a significant economic impact on a substantial number of small entities. The rationale for this certification is that there are not currently any small motor vehicle manufacturers in the United States building vehicles that would be affected by the extension of the dual-fuel incentive credit.

C. National Environmental Policy Act

NHTSA has analyzed this rulemaking action for the purposes of the National Environmental Policy Act. The agency has performed a preliminary Environmental Assessment and determined that implementation of this proposed rule will not have a significant impact on the quality of the human environment. Adoption of this proposed rule is likely to result in increased vehicle emissions and an increase in greenhouse gases, depending on the amount of alternative fuel consumed by dual-fueled vehicles manufactured in response to the rule. Such increases will stem largely from the production of larger, less fuel efficient vehicles made possible by the propose extension. However, under any scenario, the amount of increased emissions represents a very small percentage of overall emissions resulting from the consumption of petroleum fuels by highway vehicles.

D. Executive Order 13132 (Federalism)

Executive Order 13132 requires NHTSA to develop an accountable process to ensure ''meaningful and timely input by State and local officials in the development of regulatory policies that have federalism implications.'' ''Policies that have federalism implications'' is defined in the Executive Order to include regulations that have ''substantial direct effects on the States, on the relationship between the national government and the States, or on the distribution of power and responsibilities among the various levels of government.'' Under Executive Order 13132, the agency may not issue a regulation with Federalism implications, that imposes substantial direct compliance costs, and that is not required by statute, unless the Federal government provides the funds necessary to pay the direct compliance costs incurred by State and local governments, the agency consults with State and local governments, or the agency consults with State and local officials early in the process of developing the proposed regulation. NHTSA also may not issue a regulation with Federalism implications and that preempts State law unless the agency consults with State and local officials early in the process of developing the proposed regulation.

The agency has analyzed this proposed rule in accordance with the principles and criteria set forth in Executive Order 13132 and has determined that it would not have sufficient federalism implications to warrant consultation with State and local officials or the preparation of a federalism summary impact statement. The proposal to extend the dual-fuel incentive program through the 2008 model year may result in additional conventional fuel costs for state and local governments. At the same time, extension of the incentive program will ensure that dual fuel vehicles, which state and local governments are required to use by other federal mandates, will be available at lower costs. Any increased costs that would not be offset by the continued availability of lower cost dual fuel vehicles, however, are not direct costs. The agency's proposal would not otherwise have any substantial effects on the States, or on the current Federal-State relationship, or on the current distribution of power and responsibilities among the various local officials.

E. Civil Justice Reform

This proposed amendment would not have any retroactive effect. 49 U.S.C. 30161 sets forth a procedure for judicial review of final rules establishing, amending, or revoking Federal motor vehicle safety standards. That section does not require submission of a petition for reconsideration or other administrative proceedings before parties may file suit in court.

F. Paperwork Reduction Act

Under the Paperwork Reduction Act of 1995, a person is not required to respond to a collection of information by a Federal agency unless the collection displays a valid OMB control number. This proposed rule would not require any new collections of information as defined by the OMB in 5 CFR part 1320. Data regarding production of dual-fuel vehicles would be submitted to the agency under the existing procedures found in 49 CFR part 537.

G. National Technology Transfer and Advancement Act

Section 12(d) of the National Technology Transfer and Advancement Act of 1995 (NTTAA), Public Law 104–113, section 12(d) (15 U.S.C. 272) directs us to use voluntary consensus standards in our regulatory activities unless doing so would be inconsistent with applicable law or otherwise impractical. Voluntary consensus standards are technical standards (e.g., materials specifications, test methods, sampling procedures, and business practices) that are developed or adopted by voluntary consensus standards bodies, such as the Society of Automotive Engineers (SAE). The NTTAA directs us to provide Congress, through OMB, explanations when we decide not to use available and applicable voluntary consensus standards.

There are no voluntary consensus standards available at this time. However, NHTSA will consider any such standards if they become available.

H. Unfunded Mandates Reform Act

Section 202 of the Unfunded Mandates Reform Act of 1995 (UMRA) requires Federal agencies to prepare a written assessment of the costs, benefits, and other effects of proposed or final rules that include a Federal mandate likely to result in the expenditure by State, local or tribal governments, in the aggregate, or by the private sector, of more than $100 million in any one year (adjusted for inflation with base year of 1995). Before promulgating a rule for which a written statement is needed,

section 205 of the UMRA generally requires NHTSA to identify and consider a reasonable number of regulatory alternatives and adopt the least costly, most cost-effective, or least burdensome alternative that achieves the objectives of the rule. The provisions of section 205 do not apply when they are inconsistent with applicable law. Moreover, section 205 allows NHTSA to adopt an alternative other than the least costly, most cost-effective, or least burdensome alternative if the agency publishes with the final rule an explanation why that alternative was not adopted.

This proposed rule would not result in the expenditure by State, local, or tribal governments, in the aggregate, of more than $100 million annually.

I. Plain Language

Executive Order 12866 requires each agency to write all rules in plain language. Application of the principles of plain language includes consideration of the following questions:

—Have we organized the material to suit the public's needs?
—Are the requirements in the rule clearly stated?
—Does the rule contain technical language or jargon that is not clear?
—Would a different format (grouping and order of sections, use of headings, paragraphing) make the rule easier to understand?
—Would more (but shorter) sections be better?
—Could we improve clarity by adding tables, lists, or diagrams?
—What else could we do to make this rulemaking easier to understand?

If you have any responses to these questions, please include them in your comments on this NPRM.

J. Regulation Identifier Number (RIN)

The Department of Transportation assigns a regulation identifier number (RIN) to each regulatory action listed in the Unified Agenda of Federal Regulations. The Regulatory Information Service Center publishes the Unified Agenda in April and October of each year. You may use the RIN contained in the heading at the beginning of this document to find this action in the Unified Agenda.

VI. Preparation and Submission of Comments

When Is the Comment Closing Date?

NHTSA has determined that it is necessary to provide a comment period of less than 60 days because of the statutory requirement to issue a final rule by December 31, 2001.

Will the Agency Consider Late Comments?

We will consider all comments that Docket Management receives before the close of business on the comment closing date indicated above under **DATES.** To the extent possible, we will also consider comments that Docket Management receives after that date. If Docket Management receives a comment too late for us to consider it in developing a final rule (assuming that one is issued), we will consider that comment as an informal suggestion for future rulemaking action.

How Do I Prepare and Submit Comments?

Your comments must be written and in English. To ensure that your comments are correctly filed in the Docket, please include the docket number of this document in your comments.

Your comments must not be more than 15 pages long. (49 CFR 553.21). We established this limit to encourage you to write your primary comments in a concise fashion. However, you may attach necessary additional documents to your comments. There is no limit on the length of the attachments.

Please submit two copies of your comments, including the attachments, to Docket Management at the address given above under **ADDRESSES.**

In addition, given the statutory deadline of December 31, 2001, for issuance of the final rule, for those comments of 4 or more pages in length, we request that you send 10 additional copies, as well as one copy on computer disc, to: Mr. Kenneth Katz, Office of Consumer Programs, National Highway Traffic Safety Administration, 400 Seventh Street, SW, Washington, DC 20590. We emphasize that this is not a requirement. However, we ask that you do this to aid us in expediting our review of all comments. The copy on computer disc may be in any format, although we would prefer that it be in WordPerfect 8 or Word 2000.

You may also submit your comments to the docket electronically by logging onto the Dockets Management System website at *http://dms.dot.gov.* Click on ''Help & Information'' or ''Help/Info'' to obtain instructions for filing the document electronically.

How Can I Be Sure That My Comments Were Received?

If you wish Docket Management to notify you upon its receipt of your comments, enclose a self-addressed, stamped postcard in the envelope containing your comments. Upon receiving your comments, Docket Management will return the postcard by mail.

How Do I Submit Confidential Business Information?

If you wish to submit any information under a claim of confidentiality, you should submit three copies of your complete submission, including the information you claim to be confidential business information, to the Chief Counsel, NHTSA, at the address given above under **FOR FURTHER INFORMATION CONTACT.** In addition, you should submit two copies, from which you have deleted the claimed confidential business information, to Docket Management at the address given above under **ADDRESSES.** When you send a comment containing information claimed to be confidential business information, you should include a cover letter setting forth the information specified in our confidential business information regulation. (49 CFR part 512.)

How Can I Read the Comments Submitted by Other People?

You may read the comments received by Docket Management at the address given above under **ADDRESSES.** The hours of the Docket are indicated above in the same location.

You may also see the comments on the Internet. To read the comments on the Internet, take the following steps:

1. Go to the Docket Management System (DMS) Web page of the Department of Transportation (*http://dms.dot.gov/*).
2. On that page, click on ''search.''
3. On the next page (http://dms.dot.gov/search/), type in the four-digit docket number shown at the beginning of this document. Example: If the docket number were NHTSA–1998–1234, you would type ''1234.'' After typing the docket number, click on ''search.''
4. On the next page, which contains docket summary information for the docket you selected, click on the desired comments. You may download the comments. Although the comments are imaged documents, instead of word processing documents, the ''pdf'' versions of the documents are word searchable.

Please note that even after the comment closing date, we will continue to file relevant information in the Docket as it becomes available. Further, some people may submit late comments. Accordingly, we recommend that you periodically check the Docket for new material.

List of Subjects in 49 CFR Part 538

Energy conservation, Gasoline, Imports, Motor vehicles.

In consideration of the foregoing, NHTSA proposes to amend 49 CFR part 538 as follows:

PART 538—MANUFACTURING INCENTIVES FOR ALTERNATIVE FUELED VEHICLES

1. The authority citation for part 538 of Title 49 would continue to read as follows:

Authority: 49 U.S.C. 32901, 32905, and 32906; delegation of authority at 49 CFR 1.50.

2. Section 538.1 would be revised to read as follows:

§ 538.1 Scope.

This part establishes minimum driving range criteria to aid in identifying passenger automobiles that are dual-fueled automobiles. It also establishes gallon equivalent measurements for gaseous fuels other than natural gas. This part also extends the dual-fuel incentive program.

3. Section 538.2 would be revised to read as follows:

§ 538.2 Purpose.

The purpose of this part is to specify one of the criteria in 49 U.S.C. chapter 329 ''Automobile Fuel Economy'' for identifying dual-fueled passenger automobiles that are manufactured in model years 1993 through 2004. The fuel economy of a qualifying vehicle is calculated in a special manner so as to encourage its production as a way of facilitating a manufacturer's compliance with the Corporate Average Fuel Economy Standards set forth in part 531 of this chapter. The purpose is also to establish gallon equivalent measurements for gaseous fuels other than natural gas. This part also specifies the model years after 2004 in which the fuel economy of dual-fueled automobiles may be calculated under the special incentive provisions found in 49 U.S.C. 32905(b) and (d).

4. Section 538.9 would be added to read as follows:

§ 538.9 Dual fuel vehicle incentive.

The application of 49 U.S.C. 32905(b) and (d) to qualifying dual fuel vehicles is extended to the 2005, 2006, 2007, and 2008 model years.

Issued on March 6, 2002.

Stephen R. Kratzke,

Associate Administrator for Safety Performance Standards.

[FR Doc. 02–5790 Filed 3–6–02; 3:58 pm]

BILLING CODE 4910–59–P

Proposed Rules

Federal Register
Vol. 67, No. 47
Monday, March 11, 2002

This section of the FEDERAL REGISTER contains notices to the public of the proposed issuance of rules and regulations. The purpose of these notices is to give interested persons an opportunity to participate in the rule making prior to the adoption of the final rules.

DEPARTMENT OF AGRICULTURE

Agricultural Marketing Service

7 CFR Part 985

[Docket No. FV–02–985–1 PR]

Marketing Order Regulating the Handling of Spearmint Oil Produced in the Far West; Salable Quantities and Allotment Percentages for the 2002–2003 Marketing Year

AGENCY: Agricultural Marketing Service, USDA.

ACTION: Proposed rule.

SUMMARY: This rule would establish the quantity of spearmint oil produced in the Far West, by class, that handlers may purchase from, or handle for, producers during the 2002–2003 marketing year, which begins on June 1, 2002. This rule invites comments on the establishment of salable quantities and allotment percentages for Class 1 (Scotch) spearmint oil of 849,471 and 45 percent, respectively, and for Class 3 (Native) spearmint oil of 800,761 and 38 percent, respectively. The Spearmint Oil Administrative Committee (Committee), the agency responsible for local administration of the marketing order for spearmint oil produced in the Far West, recommended this rule for the purpose of avoiding extreme fluctuations in supplies and prices, to help maintain stability in the spearmint oil market.

DATES: Comments must be received by March 26, 2002.

ADDRESSES: Interested persons are invited to submit written comments concerning this proposed rule. Comments must be sent to the Docket Clerk, Marketing Order Administration Branch, Fruit and Vegetable Programs, AMS, USDA, 1400 Independence Avenue SW., STOP 0237, Washington, DC 20250–0237; Fax: (202) 720–8938; or E-mail: *moab.docketclerk@usda.gov*. All comments should reference the docket number and the date and page number of this issue of the **Federal Register** and will be made available for public inspection in the Office of the Docket Clerk during regular business hours, or can be viewed at: *http://www.ams.usda.gov/fv/moab.html*.

FOR FURTHER INFORMATION CONTACT: Robert J. Curry, Northwest Marketing Field Office, Marketing Order Administration Branch, Fruit and Vegetable Programs, AMS, USDA, 1220 SW Third Avenue, suite 385, Portland, Oregon 97204; telephone: (503) 326–2724; Fax: (503) 326–7440; or George Kelhart, Technical Advisor, Marketing Order Administration Branch, Fruit and Vegetable Programs, AMS, USDA, 1400 Independence Avenue, SW., STOP 0237, Washington, DC 20250–0237; telephone: (202) 720–2491; Fax: (202) 720–8938.

Small businesses may request information on complying with this regulation by contacting Jay Guerber, Marketing Order Administration Branch, Fruit and Vegetable Programs, AMS, USDA, 1400 Independence Avenue SW., STOP 0237, Washington, DC 20250–0237; telephone (202) 720–2491, Fax: (202) 720–8938, or E-mail: *Jay.Guerber@usda.gov*.

SUPPLEMENTARY INFORMATION: This proposal is issued under Marketing Order No. 985 (7 CFR part 985), as amended, regulating the handling of spearmint oil produced in the Far West (Washington, Idaho, Oregon, and designated parts of Nevada and Utah), hereinafter referred to as the ''order.'' This order is effective under the Agricultural Marketing Agreement Act of 1937, as amended (7 U.S.C. 601–674), hereinafter referred to as the ''Act.''

The Department of Agriculture (USDA) is issuing this rule in conformance with Executive Order 12866.

This proposal has been reviewed under Executive Order 12988, Civil Justice Reform. Under the provisions of the order now in effect, salable quantities and allotment percentages may be established for classes of spearmint oil produced in the Far West. This proposed rule would establish the quantity of spearmint oil produced in the Far West, by class, that may be purchased from or handled for producers by handlers during the 2002–2003 marketing year, which begins on June 1, 2002. This proposed rule would not preempt any State or local laws, regulations, or policies, unless they present an irreconcilable conflict with this rule.

The Act provides that administrative proceedings must be exhausted before parties may file suit in court. Under section 608c(15)(A) of the Act, any handler subject to an order may file with USDA a petition stating that the order, any provision of the order, or any obligation imposed in connection with the order is not in accordance with law and request a modification of the order or to be exempted therefrom. A handler is afforded the opportunity for a hearing on the petition. After the hearing USDA would rule on the petition. The Act provides that the district court of the United States in any district in which the handler is an inhabitant, or has his or her principal place of business, has jurisdiction to review USDA's ruling on the petition, provided an action is filed not later than 20 days after the date of the entry of the ruling.

Pursuant to authority in §§ 985.50, 985.51, and 985.52 of the order, the Committee recommended the salable quantities and allotment percentages for the 2002–2003 marketing year at its October 3, 2001, meeting. For Scotch spearmint oil, in a vote of six in favor, one opposed, and one abstention, the Committee recommended the establishment of a salable quantity and allotment percentage of 849,471 pounds and 45 percent, respectively. For Native spearmint oil, in a vote of seven in favor and one opposed, the Committee recommended the establishment of a salable quantity and allotment percentage of 800,761 pounds and 38 percent, respectively.

This proposed rule would limit the amount of spearmint oil that handlers may purchase from, or handle for, producers during the 2002–2003 marketing year, which begins on June 1, 2002. Salable quantities and allotment percentages have been placed into effect each season since the order's inception in 1980.

The U.S. production of spearmint oil is concentrated in the Far West, primarily Washington, Idaho, and Oregon (part of the area covered by the marketing order). Spearmint oil is also produced in the Midwest. The production area covered by the marketing order currently accounts for approximately 55 percent of the annual U.S. production of Scotch spearmint oil

and over 90 percent of the annual U.S. production of Native spearmint oil.

When the order became effective in 1980, the United States produced nearly 100 percent of the world's supply of Scotch spearmint oil, of which approximately 72 percent was produced in the regulated production area in the Far West. The Far West continued to produce an average of about 69 percent of the world's Scotch spearmint oil supply during the period from 1980 to 1990. International production characteristics have changed since 1990, however, with foreign Scotch spearmint oil production contributing significantly to world production. The Far West's market share as a percent of total world sales has averaged about 44 percent since 1990.

During the period between 1996 and 2000, the Committee employed a marketing strategy for Scotch spearmint oil that was intended to foster market stability and expand market share. This marketing strategy was an attempt to remain competitive on an international level by regaining a substantial amount of the Far West's historical share of the global market for this class of oil. In implementing this strategy, the Committee had been recommending the establishment of a salable quantity and allotment percentage for Scotch spearmint oil in excess of the estimated trade demand for each marketing year. In the development of its annual marketing policy statements during this period, the Committee's strategy considered general market conditions for each class of spearmint oil, including the Far West's world market share as it relates to the overall market stability of spearmint oil.

During its deliberations at the October 11, 2000, meeting, however, the Committee concluded that this marketing strategy for Scotch spearmint oil had not been entirely effective. Although sales had increased, the Far West's market share as a percentage of total world sales had not increased on average, and the market price for Scotch spearmint oil had continued to decline throughout this period. During the 1998–1999 and 1999–2000 marketing years, the price paid to producers for Scotch spearmint oil dropped to a low of $7.00 per pound. Although the current price for Scotch oil has increased to between $7.50 and $8.00 per pound, the Committee continues to believe that such returns are generally below the cost of production for most producers, which, according to the Washington State University Cooperative Extension Service (WSU), is currently between $13.87 and $14.62 per pound.

For the 2001–2002 marketing year—the current marketing year—the Committee determined at its October 11, 2000, meeting, that it would attempt to stabilize prices at a reasonable level while still considering global market share. The Committee's transitional recommendation for Scotch spearmint oil for the 2001–2002 marketing year was, therefore, based on a desire to remain competitive on an international level while maintaining the supply of oil at a level that could enhance prices and help producers remain solvent. The 2001–2002 salable quantity is somewhat higher than the estimated trade demand. This shifted the Committee's Scotch spearmint oil market strategy from one considering primarily the Far West's share of the world market to an approach primarily considering current price, supply, and demand. This action made an adequate supply of Scotch spearmint oil available as evidenced by the substantial amount of oil carried into the marketing year.

Although still concerned with global spearmint oil market share, the Committee calculated the 2002–2003 Scotch spearmint oil salable quantity and allotment percentage by primarily utilizing information on price and available supply as they are affected by the estimated trade demand. The recommendation for 2002–2003 implements the Committee's stated intent of keeping adequate supplies available at all times, while trying to bring prices to growers to a level that will help them stay in business and still allow the industry to compete with less expensive oil produced outside the regulated area. The industry continues to be interested in expanding market share. The Committee's calculations are detailed below.

Despite the recent downward trend in the price of both classes of spearmint oil, the Committee believes that the order has contributed extensively to the stabilization of producer prices, which prior to 1980 experienced wide fluctuations from year to year. According to the National Agricultural Statistics Service, for example, the average price paid for both classes of spearmint oil ranged from about $4.00 per pound to about $12.50 per pound during the period between 1968 and 1980. Excluding the most recent three marketing years, prices since the order's inception have generally stabilized at about $11.00 per pound for Native spearmint oil and at about $13.00 per pound for Scotch spearmint oil. Over the last few years, the price has dropped to between $8.00 and $11.00 per pound and $9.00 and $10.00 per pound, respectively, for Scotch and Native spearmint oils despite the Committee's efforts to balance available supplies with demand. Based on comments made at the Committee's meeting, factors that are currently contributing to depressed prices include the general uncertainty being experienced through the U.S. economy and the continuing overall weak farm situation, as well as an abundant global supply of spearmint oil.

Conditions similar to those affecting the Scotch spearmint oil market contributed to the Committee's current recommendation for a salable quantity of 800,761 pounds and an allotment percentage of 38 percent for Native spearmint oil for the 2002–2003 marketing year. The supply and demand characteristics of the current Native spearmint oil market are keeping the price flat at about $9.00 per pound—a level the Committee considers too low for the majority of producers to maintain viability. The WSU study indicates that the cost of producing Native spearmint oil currently ranges from $10.26 to $10.92 per pound. Thus, with over 90 percent of the world production currently located in the Far West, the Committee's method of calculating the Native spearmint oil salable quantity and allotment percentage continues to primarily utilize information on price and available supply as they are affected by the estimated trade demand. The Committee's stated intent is to make adequate supplies available to meet market needs and improve producer prices.

The Committee based its recommendation for the proposed salable quantity and allotment percentage for each class of spearmint oil for the 2002–2003 marketing year on the information discussed above, as well as the data outlined below.

(1) Class 1 (Scotch) Spearmint Oil

(A) Estimated carry-in on June 1, 2002—260,181 pounds. This figure is the difference between the estimated 2001–2002 marketing year trade demand of 860,000 pounds and the revised 2001–2002 marketing year total available supply of 1,120,181 pounds. The 2001–2002 marketing year total available supply was revised due to differences in the carry-in estimated on October 11, 2000, and the actual carry-in on June 1, 2001, as well as producer deficiencies on June 1, 2001. A producer is deficient when the producer is unable to produce oil equal to his or her salable quantity and is unable to fill this deficiency from reserve pool oil or excess oil from another producer. When prices are below the producer's costs of

production, they reduce acres and produce less oil.

(B) Estimated trade demand for the 2002–2003 marketing year—875,000 pounds. This figure represents the Committee's estimate based on the average of the estimates provided by producers at five Scotch spearmint oil production area meetings held in September 2001, as well as estimates provided by handlers and others at the meeting. Handler trade demand estimates for the 2002–2003 marketing year ranged from 675,000 to 900,000 pounds. The last five year average sales were 936,000 pounds.

(C) Salable quantity required from the 2002–2003 marketing year production—614,819 pounds. This figure is the difference between the estimated 2002–2003 marketing year trade demand (875,000 pounds) and the estimated carry-in on June 1, 2002 (260,181 pounds).

(D) Total estimated allotment base for the 2002–2003 marketing year—1,887,713 pounds. This figure represents a one-percent increase over the revised 2001–2002 total allotment base. This figure is generally revised each year on June 1 due to producer base being lost based on the provisions of § 985.53(e). The revision is usually minimal.

(E) Computed allotment percentage—32.6 percent. This percentage is computed by dividing the required salable quantity by the total estimated allotment base.

(F) Recommended allotment percentage—45 percent. This recommendation is based on the Committee's determination that a decrease from the current season's allotment percentage of 48 percent to the computed 32.6 percent would be too drastic a reduction in a single year. The recommended level of 45 percent is also only slightly below the 5-year average sales, and if sales in 2002–2003 are average or better, the carry-out would be reduced.

(G) The Committee's recommended salable quantity—849,471 pounds. This figure is the product of the recommended allotment percentage and the total estimated allotment base.

(H) Estimated available supply for the 2002–2003 marketing year—1,109,652 pounds. This figure is the sum of the 2002–2003 recommended salable quantity (849,471 pounds) and the estimated carry-in on June 1, 2002 (260,181 pounds).

(2) Class 3 (Native) Spearmint Oil

(A) Estimated carry-in on June 1, 2002—198,583 pounds. This figure is the difference between the estimated 2001–2002 marketing year trade demand of 929,000 pounds and the revised 2001–2002 marketing year total available supply of 1,127,583 pounds.

(B) Estimated trade demand for the 2002–2003 marketing year—960,000 pounds. This figure is based on input from producers at the four Native spearmint oil production area meetings held in September 2001, from handlers, and from Committee members and other meeting participants at the October 3, 2001, meeting. The average estimated trade demand at the four production area meetings was 975,000 pounds.

(C) Salable quantity required from the 2002–2003 marketing year production—761,417 pounds. This figure is the difference between the estimated 2002–2003 marketing year trade demand (960,000 pounds) and the estimated carry-in on June 1, 2002 (198,583 pounds).

(D) Total estimated allotment base for the 2002–2003 marketing year—2,107,267 pounds. This figure represents a one percent increase over the revised 2001–2002 total allotment base. This figure is generally revised each year on June 1 due to producer base being lost based on the provisions of § 985.53(e). The revision normally involves a minimal amount of spearmint oil.

(E) Computed allotment percentage—36.1 percent. This percentage is computed by dividing the required salable quantity by the total estimated allotment base.

(F) Recommended allotment percentage—38 percent. This is the Committee's recommendation based on the computed allotment percentage, the average of the computed allotment percentage figures from the four production area meetings (38.1 percent), and input from producers and handlers at the October 3, 2001, meeting.

(G) The Committee's recommended salable quantity—800,761 pounds. This figure is the product of the recommended allotment percentage and the total estimated allotment base.

(H) Estimated available supply for the 2002–2003 marketing year—999,344 pounds. This figure is the sum of the 2002–2003 recommended salable quantity (800,761 pounds) and the estimated carry-in on June 1, 2002 (198,583 pounds).

The salable quantity is the total quantity of each class of spearmint oil which handlers may purchase from or handle on behalf of producers during a marketing year. Each producer is allotted a share of the salable quantity by applying the allotment percentage to the producer's allotment base for the applicable class of spearmint oil.

The Committee's recommended Scotch and Native spearmint oil salable quantities and allotment percentages of 849,471 pounds and 45 percent and 800,761 and 38 percent, respectively, are based on the Committee's goal of maintaining market stability by avoiding extreme fluctuations in supplies and prices and the anticipated supply and trade demand during the 2002–2003 marketing year. The proposed salable quantities are not expected to cause a shortage of spearmint oil supplies. Any unanticipated or additional market demand for spearmint oil which may develop during the marketing year can be satisfied by an increase in the salable quantities. Both Scotch and Native spearmint oil producers who produce more than their annual allotments during the 2002–2003 season may transfer such excess spearmint oil to a producer with spearmint oil production less than his or her annual allotment or put it into the reserve pool.

This proposed regulation, if adopted, would be similar to those which have been issued in prior seasons. Costs to producers and handlers resulting from this proposed action are expected to be offset by the benefits derived from a stable market and improved returns. In conjunction with the issuance of this proposed rule, the Committee's marketing policy statement for the 2002–2003 marketing year has been reviewed by USDA. The Committee's marketing policy statement, a requirement whenever the Committee recommends volume regulations, fully meets the intent of § 985.50 of the order. During its discussion of potential 2002–2003 salable quantities and allotment percentages, the Committee considered: (1) The estimated quantity of salable oil of each class held by producers and handlers; (2) the estimated demand for each class of oil; (3) prospective production of each class of oil; (4) total of allotment bases of each class of oil for the current marketing year and the estimated total of allotment bases of each class for the ensuing marketing year; (5) the quantity of reserve oil, by class, in storage; (6) producer prices of oil, including prices for each class of oil; and (7) general market conditions for each class of oil, including whether the estimated season average price to producers is likely to exceed parity. Conformity with the USDA's ''Guidelines for Fruit, Vegetable, and Specialty Crop Marketing Orders'' has also been reviewed and confirmed.

The establishment of these salable quantities and allotment percentages would allow for anticipated market needs. In determining anticipated market needs, consideration by the

Committee was given to historical sales, as well as changes and trends in production and demand. This rule also provides producers with information on the amount of spearmint oil which should be produced for next season in order to meet anticipated market demand.

Initial Regulatory Flexibility Analysis

Pursuant to requirements set forth in the Regulatory Flexibility Act (RFA), the Agricultural Marketing Service (AMS) has considered the economic impact of this action on small entities. Accordingly, AMS has prepared this initial regulatory flexibility analysis.

The purpose of the RFA is to fit regulatory actions to the scale of business subject to such actions in order that small businesses will not be unduly or disproportionately burdened. Marketing orders issued pursuant to the Act, and rules issued thereunder, are unique in that they are brought about through group action of essentially small entities acting on their own behalf. Thus, both statutes have small entity orientation and compatibility.

There are 7 spearmint oil handlers subject to regulation under the order, and approximately 118 producers of Class 1 (Scotch) spearmint oil and approximately 107 producers of Class 3 (Native) spearmint oil in the regulated production area. Small agricultural service firms are defined by the Small Business Administration (SBA) (13 CFR 121.201) as those having annual receipts of less than $5,000,000, and small agricultural producers are defined as those whose annual receipts are less than $750,000.

Based on the SBA's definition of small entities, the Committee estimates that 2 of the 7 handlers regulated by the order could be considered small entities. Most of the handlers are large corporations involved in the international trading of essential oils and the products of essential oils. In addition, the Committee estimates that 30 of the 118 Scotch spearmint oil producers and 19 of the 107 Native spearmint oil producers could be classified as small entities under the SBA definition. Thus, a majority of handlers and producers of Far West spearmint oil may not be classified as small entities.

The Far West spearmint oil industry is characterized by producers whose farming operations generally involve more than one commodity, and whose income from farming operations is not exclusively dependent on the production of spearmint oil. A typical spearmint oil-producing operation has enough acreage for rotation such that the total acreage required to produce the crop is about one-third spearmint and two-thirds rotational crops. An average spearmint oil-producing farm has to have considerably more acreage than is planted to spearmint during any given season. Crop rotation is an essential cultural practice in the production of spearmint oil for weed, insect, and disease control. To remain economically viable with the added costs associated with spearmint oil production, most spearmint oil-producing farms fall into the SBA category of large businesses.

This proposed rule would establish the quantity of spearmint oil produced in the Far West, by class, that handlers may purchase from, or handle for, producers during the 2002–2003 marketing year. The Committee recommended this rule to help maintain stability in the spearmint oil market by avoiding extreme fluctuations in supplies and prices. Establishing quantities to be purchased or handled during the marketing year through volume regulations allows growers to plan their mint planting and harvesting to meet expected market needs. This action is authorized by the provisions of §§ 985.50, 985.51 and 985.52 of the order.

Small spearmint oil producers generally are not as extensively diversified as larger ones and as such are more at risk to market fluctuations. Such small farmers generally need to market their entire annual crop and do not have the luxury of having other crops to cushion seasons with poor spearmint oil returns. Conversely, large diversified producers have the potential to endure one or more seasons of poor spearmint oil markets because incomes from alternate crops could support the operation for a period of time. Being reasonably assured of a stable price and market provides small producing entities with the ability to maintain proper cash flow and to meet annual expenses. Thus, the market and price stability provided by the order potentially benefit the small producer more than such provisions benefit large producers. Even though a majority of handlers and producers of spearmint oil may not be classified as small entities, the volume control feature of this order has small entity orientation.

Demand for spearmint oil tends to be relatively stable from year-to-year. The demand for spearmint oil is expected to grow slowly for the foreseeable future because the demand for consumer products that use spearmint oil will likely expand slowly, in line with population growth.

Demand for spearmint oil at the farm level is derived from retail demand for spearmint-flavored products at retail such as chewing gum, toothpaste, and mouthwash. The manufacturers of these products are by far the largest users of mint oil. However, spearmint flavoring is generally a very minor component of the products in which it is used, so changes in the raw product price have no impact on retail prices for those goods.

Spearmint oil production tends to be cyclical. Years of large production, with demand remaining reasonably stable, have led to periods in which large producer stocks of unsold spearmint oil have depressed producer prices for a number of years. Shortages and high prices may follow in subsequent years, as producers respond to price signals by cutting back production.

The wide fluctuations in supply and prices that result from this cycle, which was even more pronounced before the creation of the marketing order, can create liquidity problems for some producers. The marketing order was designed to reduce the price impacts of the cyclical swings in production. However, producers have been less able to weather these cycles in recent years because of the decline in prices of many of the alternative crops they grow. As noted earlier, almost all spearmint oil producers diversify by growing other crops.

Instability in the spearmint oil subsector of the mint industry is much more likely to originate on the supply side than the demand side. Fluctuations in yield and acreage planted from season-to-season tend to be larger than fluctuations in the amount purchased by buyers.

The significant variability is illustrated by the fact that between 1980 and 2000, production tended to vary by 25 percent above and below the average production level of 1,888,810 pounds. The 25 percent figure (469,321 pounds) is the standard deviation around the average production level. Production in the shortest crop year was about 48 percent of the 21-year average and the largest crop was approximately 163 percent. A key consequence is that in years of oversupply and low prices, the season average producer price of spearmint oil is below the average cost of production (as measured by the Washington State University Cooperative Extension Service).

In an effort to stabilize prices, the spearmint oil industry uses the volume control mechanisms authorized under the order. This authority allows the Committee to recommend a salable quantity and allotment percentage for each class of oil for the upcoming marketing year. The salable quantity for

each class of oil is the total volume of that oil which producers may sell during the marketing year. The allotment percentage for each class of spearmint oil is derived by dividing the salable quantity by the total allotment base.

Each producer is then issued an annual allotment certificate, in pounds, for the applicable class of oil, which is calculated by multiplying the producer's allotment base by the applicable allotment percentage. This is the amount of oil for the applicable class that the producer can sell.

By November 1 of each year, the Committee identifies any oil that individual producers have produced above the volume specified on their annual allotment certificates. This excess oil is placed in a reserve pool administered by the Committee.

There is a reserve pool for each class of oil which may not be sold during the current marketing year unless the Secretary approves a Committee recommendation to make a portion of the pool available. However, limited quantities of reserve oil are typically sold to fill deficiencies. A deficiency occurs when on-farm production is less than a producer's allotment. In that case, a producer's own reserve oil can be sold to fill that deficiency. Excess production (higher than the producer's allotment) can be sold to fill other producers' deficiencies.

In any given year, the total available supply of spearmint oil is composed of current production plus carry-over stocks from the previous crop. The Committee seeks to maintain market stability by balancing supply and demand, and to close the marketing year with an appropriate level of carry-out. If the industry has production in excess of the salable quantity, then the reserve pool absorbs the surplus quantity of spearmint oil, which goes unsold during that year, unless the oil is needed for unanticipated sales.

Under its provisions, the order may attempt to stabilize prices by (1) limiting supply and establishing reserves in high production years, thus minimizing the price-depressing effect that excess producer stocks have on unsold spearmint oil, and (2) ensuring that stocks are available in short supply years when prices would otherwise increase dramatically. The reserve pool grown in large production years and stocks are drawn down in short crop years.

An econometric model was used to assess the impact that volume control has on the prices producers receive for their commodity. Without volume control, spearmint oil markets would likely be over-supplied, resulting in low producer prices and a large volume of oil stored and carried over to the next crop year. The model estimates how much lower producer prices would likely be in the absence of volume controls.

The Committee estimated the available supply for both classes of oil at 2,108,996 pounds, and that the expected carry-in will be 458,764 pounds. Therefore, with volume control, sales by producers for the 2002–2003 marketing year should be limited to 1,650,232 pounds (the recommended salable quantity for both classes of spearmint oil).

The recommended salable percentages, upon which 2002–2003 producer allotments are based, are 45 percent for Scotch and 38 percent for Native. Without volume controls, producers would not be limited to these allotment levels, and could produce and sell additional spearmint. The econometric model estimated a $1.66 decline in average grower price per pound (from both classes or spearmint oil) resulting from the higher quantities produced and marketed without volume control. Northwest grower prices for both classes of spearmint oil for 1999 and 2000 averaged $9.13, based on National Agricultural Statistics Service data. The severe surplus situation for the spearmint oil market that would exist without volume controls in 2002–2003 would also likely dampen prospects for improved grower prices in future years because of the buildup in stocks.

The use of volume controls allows the industry to fully supply spearmint oil markets while avoiding the negative consequences of over-supplying these markets. The use of volume controls is believed to have little or no effect on consumer prices of products containing spearmint oil and will not result in fewer retail sales of such products.

The Committee discussed alternatives to this rule including higher and lower levels for the salable quantities and allotment percentages for both classes of oil, as well as not regulating the handling of spearmint oil during the 2002–2003 marketing year. The Committee also noted that the operation of the marketing order provides valuable statistical information on domestic and foreign markets to producers and other industry factors.

The Committee discussed and rejected the idea of not regulating Scotch spearmint oil, because of the severe price-depressing effects that would occur without volume control.

The Committee also considered alternative regulation levels for Scotch spearmint oil. The Committee explored maintaining the Scotch spearmint oil allotment percentage at the same level as the current year (48 percent) or increasing the percentage, allowing even more product into the market. These options were discussed at length by the Committee, producers, and handlers in attendance at the meeting. Both options were rejected because current supplies are very abundant and resultant prices are considered too low for general producer viability.

Finally, the Committee discussed recommending a level of regulation as low as a 32.6 percent allotment percentage. As noted earlier, the Committee determined that a drop in the allotment percentage for Scotch spearmint oil from 48 percent during the current year to 32.6 percent would likely be too extreme an adjustment in one marketing year. The Committee opted for a much smaller decline of 3 percentage points, to a salable percentage of 45 percent. The recommended salable quantity is 849,971 pounds.

One Committee member, however, voted against the recommended Scotch spearmint oil salable quantity and allotment percentage in support of a lower level. In consideration of the current, relatively depressed price for Scotch spearmint oil, he felt a more restrictive level of regulation would help to enhance returns to producers.

The general consensus of the individuals commenting during the meeting indicated strong support for a shift in Scotch spearmint oil marketing strategy from one considering primarily the Far West's share of the world market to an approach primarily considering current price, supply, and demand. The Committee's belief that the Scotch spearmint oil market can be improved and stabilized is reflected in its recommendation to establish the salable quantity and allotment percentage at 849,471 pounds and 45 percent, respectively.

The Committee discussed alternative allotment percentage levels for the other class of spearmint oil (Native) ranging from a low of about 35 percent to a high of about 41 percent. With the current price for Native spearmint oil lower than the 20-year average, and demand fairly flat, the Committee, after considerable discussion, determined that 800,761 pounds and 38 percent would be the most effective salable quantity and allotment percentage, respectively, for the 2002–2003 marketing year.

The one dissenting member stated that 38 percent is too great a change from the current season's allotment

percentage of 45 percent, and that demand generally supports more supply than would be released at 38 percent. After a great deal of discussion, the Committee recommended the lower percentage as a means of balancing supplies with market needs. If more supplies are needed during the marketing year, the percentage could be increased.

The Committee's recommendation to establish salable quantities and allotment percentages for both classes of spearmint oil was made after careful consideration of all available information, including: (1) The estimated quantity of salable oil of each class held by producers and handlers; (2) the estimated demand for each class of oil; (3) prospective production of each class of oil; (4) total of allotment bases of each class of oil for the current marketing year and the estimated total of allotment bases of each class for the ensuing marketing year; (5) the quantity of reserve oil, by class, in storage; (6) producer prices of oil, including prices for each class of oil; and (7) general market conditions for each class of oil, including whether the estimated season average price to producers is likely to exceed parity. Based on its review, the Committee believes that the salable quantity and allotment percentage levels recommended would achieve the objectives sought.

Without any regulations in effect, the Committee believes the industry would return to the pronounced cyclical price patterns that occurred prior to the order, and that prices in 2002–2003 would decline substantially below current levels.

As stated earlier, the Committee believes that the order has contributed extensively to the stabilization of producer prices, which prior to 1980 experienced wide fluctuations from year-to-year. National Agricultural Statistics Service records show that the average price paid for both classes of spearmint oil ranged from about $4.00 per pound to about $12.50 per pound during the period between 1968 and 1980. Prices have been consistently more stable since the marketing order's inception in 1980. Excluding the most recent three marketing years, prices since the order's inception have generally stabilized at about $13.00 per pound for Scotch spearmint oil and about $11.00 per pound for Native spearmint oil.

Over the last three years, however, large production and carry-in inventories have contributed to declining prices, despite the Committee's efforts to balance available supplies with demand. Over the last three years, prices have ranged from $8.00 to $11.00 per pound for Scotch spearmint oil and between $9.00 to $10.00 per pound for Native spearmint oil.

According to the Committee, the recommended salable quantities and allotment percentages are expected to achieve the goals of market and price stability, and price improvement.

As stated earlier, annual salable quantities and allotment percentages have been issued for both classes of spearmint oil since the order's inception. Reporting and recordkeeping requirements have remained the same for each year of regulation. These requirements have been approved by the Office of Management and Budget under OMB Control No. 0581–0065. Accordingly, this action would not impose any additional reporting or recordkeeping requirements on either small or large spearmint oil producers and handlers. All reports and forms associated with this program are reviewed periodically in order to avoid unnecessary and duplicative information collection by industry and public sector agencies. The USDA has not identified any relevant Federal rules that duplicate, overlap, or conflict with this proposed rule.

The Committee's meeting was widely publicized throughout the spearmint oil industry and all interested persons were invited to attend and participate on all issues. In addition, interested persons are invited to submit information on the regulatory and informational impacts of this action on small businesses.

A small business guide on complying with fruit, vegetable, and specialty crop marketing agreements and orders may be viewed at: *http://www.ams.usda.gov/fv/moab.html.* Any questions about the compliance guide should be sent to Jay Guerber at the previously mentioned address in the **FOR FURTHER INFORMATION CONTACT** section.

A 15-day comment period is provided to allow interested persons the opportunity to respond to the proposal, including any regulatory and informational impacts of this action on small businesses. Fifteen days is deemed appropriate because this rule would need to be effective as soon as possible to provide producers sufficient time prior to the beginning of the 2002–2003 marketing year to adjust their cultural and marketing plans accordingly. All written comments received within the comment period will be considered before a final determination is made on this matter.

List of Subjects in 7 CFR Part 985

Marketing agreements, Oils and fats, Reporting and recordkeeping requirements, Spearmint oil.

For the reasons set forth in the preamble, 7 CFR part 985 is proposed to be amended as follows:

PART 985—MARKETING ORDER REGULATING THE HANDLING OF SPEARMINT OIL PRODUCED IN THE FAR WEST

1. The authority citation for 7 CFR part 985 continues to read as follows:

Authority: 7 U.S.C. 601–674.

2. A new § 985.221 is added to read as follows:

Note: This section will not appear in the Code of Federal Regulations.

§ 985.221 Salable quantities and allotment percentages—2002–2003 marketing year.

The salable quantity and allotment percentage for each class of spearmint oil during the marketing year beginning on June 1, 2002, shall be as follows:

(a) Class 1 (Scotch) oil—a salable quantity of 849,471 pounds and an allotment percentage of 45 percent.

(b) Class 3 (Native) oil—a salable quantity of 800,761 pounds and an allotment percentage of 38 percent.

Dated: March 5, 2002.

A.J. Yates,

Administrator, Agricultural Marketing Service.

[FR Doc. 02–5686 Filed 3–8–02; 8:45 am]

BILLING CODE 3410–02–P

NUCLEAR REGULATORY COMMISSION

10 CFR Part 60

[Docket No. PRM–60–2 and 60–2A]

The States of Nevada and Minnesota; Denial of Petition for Rulemaking

AGENCY: Nuclear Regulatory Commission.

ACTION: Denial of petition for rulemaking.

SUMMARY: The Nuclear Regulatory Commission (NRC) is denying a petition for rulemaking (PRM–60–2 and 60–2A) submitted by the States of Nevada and Minnesota dealing with disposal of high-level radioactive waste (HLW). In PRM–60–2, the petitioners requested that the NRC adopt a regulation governing the implementation of certain generally applicable environmental standards for HLW that had been proposed by the U.S. Environmental

Protection Agency (EPA) in 1982. Subsequently, in PRM–60–2A, the petitioners amended their original petition after EPA issued final standards in 1985. The amended petition was placed on hold pending completion of certain rulemaking activities, including EPA and NRC development of new HLW disposal standards applicable only to a site at Yucca Mountain, Nevada. The NRC is denying the petition because the NRC considered and partially addressed petitioners' concerns in the development of its site-specific standards for a proposed repository at Yucca Mountain, and amending NRC's generic repository licensing regulations at this time would unnecessarily expend limited Commission resources because there is no current expectation that the generic regulations, in their current form, will be used.

ADDRESSES: Copies of the petition for rulemaking, the public comments received, and the NRC's letter to the petitioners may be examined at the NRC Public Document Room, Room O1F23, located at 11555 Rockville Pike, Rockville, MD.

The NRC maintains an Agencywide Document Access and Management System (ADAMS), which provides text and image files of NRC's public documents. These documents may be accessed through the NRC's Public Electronic Reading Room on the Internet at *http://www.nrc.gov/NRC/ADAMS/index.html.* If you do not have access to ADAMS or if there are problems in accessing the documents located in ADAMS, contact the NRC Public Document Room (PDR) Reference staff at 1–800–397–4209, 301–415–4737, or by e-mail to *pdr@nrc.gov.*

FOR FURTHER INFORMATION CONTACT: Mark Haisfield, telephone (301) 415–6196, e-mail *MFH@nrc.gov* or Timothy McCartin, telephone (301) 415–7285, e-mail *TJM3@nrc.gov* of the Office of Nuclear Material Safety and Safeguards, U.S. Nuclear Regulatory Commission, Washington, DC 20555–0001.

SUPPLEMENTARY INFORMATION:

The Petition

On April 30, 1985 (50 FR 18267), the NRC published a notice of receipt of a petition for rulemaking (PRM–60–2) filed by the States of Nevada and Minnesota (petitioners) on January 21, 1985. The petition requested that the NRC amend its regulations in 10 CFR Part 60 that govern disposal of HLW in geologic repositories. The petitioners requested that NRC amend its regulations to add assurance requirements proposed by the EPA (40 CFR 191.14) in EPA's proposed rule (47 FR 58196; December 29, 1982) to establish generally applicable environmental standards for the management and disposal of spent nuclear fuel, HLW and transuranic wastes. EPA published its final environmental standards on September 19, 1985 (50 FR 38066).[1] The final standards included the assurance requirements of concern to petitioners (e.g., institutional controls and post-permanent closure monitoring), but EPA did not impose these requirements on facilities regulated by the NRC (*see* 40 CFR 191.14 (1985)). The petitioners subsequently filed an amended petition with the NRC on September 30, 1985 (PRM–60–2A) and the NRC published a notice of receipt of the amended petition on December 19, 1985 (50 FR 51701).

The amended petition requested that NRC amend 10 CFR part 60 to: (1) incorporate regulations that are substantively equivalent to EPA's 1985 assurance requirements, and (2) incorporate regulations pertaining to NRC's potential adoption of the Final Environmental Impact Statement (FEIS) to be prepared by the U.S. Department of Energy (DOE) as part of its site recommendation of a potential geologic repository. In the notice of the amended petition, the NRC noted that rulemaking actions currently underway, when finalized, would address the concerns expressed by petitioners (50 FR 51703). The actions included proposed amendments to 10 CFR part 60 to eliminate inconsistencies between NRC's generic regulations and EPA's 1985 standards, and proposed amendments to 10 CFR part 51 on the adoption of DOE's FEIS. Accordingly, the notice advised readers that further consideration of the issues raised by petitioners would be deferred for consideration in these rulemakings. On July 3, 1989 (54 FR 27864), the NRC published a final rule, ''NEPA Review Procedures for Geologic Repositories for High-Level Waste.'' In that rulemaking, the NRC denied the portion of the amended petition proposing specific regulations to govern the process for adopting DOE's FEIS, but considered the concerns raised by petitioners on this issue in the process of formulating the final rule (54 FR 27868).

[1] EPA's final disposal standards at 40 CFR Part 191 were struck down by the U.S. Court of Appeals for the 1st Circuit in *NRDC* v. *EPA,* 824 F.2d 1258 (1st Cir. 1987). However, in 1992, Congress, in the Waste Isolation Pilot Plant Land Withdrawal Act, Public Law 102–579, reinstated the standards for sites other than Yucca Mountain, Nevada, except for those portions that were the specific subject of the judicial remand. The assurance requirements, 40 CFR 191.14, were among the reinstated standards.

Public Comments on the Petition

The notice of receipt of the petition for rulemaking invited interested persons to submit comments. The comment period closed on July 1, 1985, for PRM–60–2, and February 18, 1986, for PRM–60–2A. The NRC received eight comment letters on the petition and the amendment from seven commenters (one commenter provided comments on both PRM–60–2 and 60–2A). There were six comment letters on PRM–60–2 and two comment letters on PRM–60–2A. Of the seven commenters, five were from States and two were from representatives of the nuclear power industry. The State commenters agreed with petitioners that assurance requirements should be included in NRC regulations whereas the industry commenters believed that assurance provisions should be in guidance rather than the regulations.

Intervening Actions

Subsequent to submission of the petitions, two events occurred which substantially altered the legal landscape of the Government's program for the disposal of HLW. These events resulted in the Commission's withdrawal of its proposed amendments to conform 10 CFR part 60 to EPA's 1985 standards (63 FR 66498; December 2, 1998). First, in 1987, Congress amended the Nuclear Waste Policy Act of 1982 (NWPA) in the Nuclear Waste Policy Amendments Act (Public Law 100–203), to provide, among other things, that only the site at Yucca Mountain, Nevada, (YM) would be characterized for possible selection as a geologic repository. Second, in the Energy Policy Act of 1992 (Public Law 102–486), Congress required that EPA issue public health and environmental radiation protection standards that would apply solely to the YM site and that NRC modify its technical requirements and criteria to be consistent with the EPA standards. Pursuant to these statutory changes, the EPA issued its final standards applicable to YM in a new 40 CFR Part 197 on June 13, 2001 (66 FR 32074) and the NRC issued its final conforming requirements in a new 10 CFR part 63—''Disposal of High-Level Radioactive Wastes in a Proposed Geologic Repository at Yucca Mountain, Nevada'' (66 FR 55732; November 2, 2001). In its rulemaking, the NRC also amended 10 CFR part 60 to make it clear that 10 CFR part 60 only applies to the licensing of repositories at sites other than Yucca Mountain.

Denial of the Petition

The NRC is denying the petition, as amended, for the following reasons:

1. The petitioners' concerns were considered in the rulemaking establishing 10 CFR part 63 and the regulations in 10 CFR part 60 no longer apply to a repository at YM. Therefore, the petition, even if granted, would not affect the regulatory regime now in place for the licensing of a potential repository at the YM site.

The NRC has established a new set of regulations applicable specifically and exclusively to a proposed repository at YM in 10 CFR part 63. The issues raised by the petitioners were considered in the course of this rulemaking as explained below. However, the petitioners' requested amendments were specifically directed to the provisions contained in 10 CFR part 60, ''Disposal of High-Level Radioactive Wastes in Geologic Repositories.'' At the time the petition was filed, these regulations were applicable to any potential HLW repository that would be sited, constructed or operated under the NWPA, including one at YM. However, 10 CFR part 60 now has been amended, in light of the statutory changes brought about by the 1987 amendments to the NWPA and by the Energy Policy Act of 1992, to apply to any potential repository *except* one at YM.

2. There is no immediate need for revising 10 CFR part 60 and doing so would unnecessarily expend limited Commission resources.

In the rulemaking to establish separate requirements for a repository at YM, the Commission chose to leave its existing generic requirements intact and in place. The Commission acknowledged that if a need arises to apply the existing generic requirements at 10 CFR part 60, those requirements would need to be revised to account for developments in the capability of technical methods for assessing the performance of a geologic repository. *See* 64 FR 8641, 8643; February 22, 1999. However, the Commission expressed confidence that it would be afforded adequate time and resources in future years to amend its generic regulations for any additional repository site that might be authorized. Should it become necessary to revise these regulations, petitioners would have ample opportunity to suggest amendments. Barring such an eventuality, however, there is no immediate need to amend 10 CFR part 60 and doing so would unnecessarily expend limited Commission resources.

10 CFR Part 63 and the Petition

Although the Commission is denying the petition for the reasons stated above, the Commission considered the substantive issues raised in the petition in the development of NRC's final 10 CFR part 63 rule. A summary of how the petitioners' proposals are addressed in 10 CFR part 63 is provided below:

Post-permanent Closure Monitoring

The petitioners proposed revisions to the regulations that provide further specification to the requirements for the monitoring program to be implemented after the repository has been permanently sealed (*i.e.,* post-permanent closure). Generally, the petitioners requested that post-permanent closure monitoring provide substantive confirmatory information regarding long-term repository performance at the time of license termination, post-permanent closure monitoring will not degrade repository performance, and that minimum requirements for the description of the monitoring program be established in the regulation (*e.g.,* parameters to be monitored and monitoring devices). The Commission's new regulations in 10 CFR part 63 address the petitioners' concerns in the requirements for a performance confirmation program and a program for post-permanent closure monitoring.

Although both the performance confirmation program and the post-permanent closure monitoring program include monitoring, the Commission considers these two programs to be distinctly different because each program addresses very distinct regulatory periods and decisions. The performance confirmation program is conducted up to the time of the decision to permanently close the repository. Thus, the performance confirmation data is used to inform and increase confidence in the Commission's decision on permanent closure of the repository. Objectives and requirements of the performance confirmation program are specified in subpart F of part 63 that are consistent with the petitioners' recommendations (*e.g.,* the performance confirmation program: monitors and evaluates subsurface conditions against design assumptions; confirms natural and engineered barriers are functioning as intended and anticipated; monitors and analyzes changes from the baseline condition of parameters that could affect repository performance; and is conducted in a manner that does not adversely affect repository performance). When DOE files an application to amend the license for permanent closure, it is required, by § 63.51(a)(1), to update its performance assessment of the repository with the performance confirmation data. Consistent with NRC's licensing procedures, this information and associated analyses will be available to all stakeholders.

The program of post-permanent closure monitoring begins after the performance confirmation program ends (*i.e.,* after the time of permanent closure). The program for post-permanent closure monitoring would only occur if the Commission reaches a positive finding on the amendment for permanent closure. If an amendment for permanent closure is granted, it is expected that the performance confirmation program would have provided further information to increase confidence that repository performance is expected to comply with the regulations. Post-permanent closure monitoring is not considered an extension of the confirmation program, but is intended as a more general program expected to monitor a variety of conditions (e.g., land-use controls established under § 63.121(b), safeguards information, and potential release of radionuclides into ground water) to ensure public health and safety is protected. The Commission did not specify details for the post-permanent closure monitoring program in 10 CFR part 63, as was provided for the performance confirmation program. DOE's development and NRC review of the post-permanent closure monitoring program, submitted as part of the license amendment for permanent closure, will benefit from the results of the performance confirmation program (anticipated to extend over tens of years). Therefore, the Commission considers the general requirement for a post-permanent closure monitoring program to be appropriate and additional details are neither necessary nor warranted at this time. As part of a license amendment for permanent closure [§ 63.51(a)(2)], the details of the post-permanent closure monitoring program will be subject to regulatory review and the NRC's licensing process.

Institutional Controls

The petitioners provided additional text for 10 CFR part 60 that would clarify the regulatory approach for institutional controls. First, the petitioners proposed definitions for active and passive institutional controls. The Commission agrees with the concepts for active and passive institutional controls as proposed by the petitioners and has included the essential elements of the petitioner's

definitions in 10 CFR part 63. Specifically, 10 CFR part 63 includes a definition for passive institutional controls (§ 63.302) and provides specific requirements for active institutional controls in the regulation. Active institutional controls are specific actions required during, and beyond, the operational phase of a potential repository that are more appropriate as regulatory requirements rather than as parts of a definition. Specific aspects of the petitioner's proposed definition for ''active institutional control'' are provided in 10 CFR part 63, such as: (1) requirements for ownership and control of interests in land (§ 63.121); (2) program to control and monitor radioactive effluents during operations (§ 63.21); (3) performance confirmation program (Subpart F); and (4) plans for decontamination of surface facilities (§ 63.52). In addition, pursuant to the Energy Policy Act of 1992, DOE is required to provide post-closure oversight to prevent any activity at the site that poses an unreasonable risk of breaching the repository's engineered or geologic barriers or increasing exposures of the public beyond allowable limits. A detailed description of DOE's post-closure oversight program is required at § 63.51(a)(3).

Second, the petitioners requested a new section be added to 10 CFR part 60 clarifying that institutional controls will not assure compliance beyond 100 years after disposal, but that passive institutional controls may be considered in assessing the likelihood and consequences of processes and events affecting the geologic setting. A more restrictive approach for institutional controls has been implemented in EPA's final standards in 40 CFR part 197 and NRC's final standards in 10 CFR part 63 than was proposed in the petition. DOE is not allowed to rely on institutional controls to assure compliance and 10 CFR part 63 does *not* permit passive institutional controls to be considered in assessing the likelihood and consequences of processes and events. Both EPA's approach in 40 CFR part 197 and the Commission's approach in 10 CFR part 63 are based primarily on recommendations by the National Academy of Sciences (NAS).

In 1992, Congress directed EPA, at Section 801 of the Energy Policy Act of 1992, Public Law 102–486 (EnPA), to contract with the NAS to advise EPA on the appropriate technical basis for public health and safety standards governing the Yucca Mountain repository. On August 1, 1995, the NAS published its report entitled ''Technical Bases for Yucca Mountain Standards.'' The EnPA specifically asked the NAS to address the issue of the effectiveness of institutional controls to prevent breaching of the repository's engineered or geologic barriers as a result of human intrusion. The NAS concluded that it was not reasonable to assume that institutional controls will prevent breaching of the repository's barriers. Thus, the NAS recommended a stylized calculation be used to determine whether or not a human intrusion would substantially degrade repository performance as an approach to understand potential impacts to the repository. EPA's final standards in 40 CFR part 197 generally adopted the NAS approach. Consistent with statute, the NRC incorporated the EPA human intrusion standard in 10 CFR part 63. The regulations in 40 CFR part 197 require DOE to determine the earliest time after disposal that the waste package would degrade sufficiently that a stylized human intrusion could occur without recognition by the drillers. DOE must then analyze in a stylized scenario the consequences of a potential intrusion into the repository, whether such intrusion occurs before or after 10,000 years after disposal. EPA noted in the preamble to its final rule (66 FR 32073, at 32104, June 13, 2001) that ''DOE's waste package performance estimates indicate that a waste package would be recognizable to a driller for at least thousands of years.'' The petitioners' recommendation that passive institutional controls could be considered in assessing processes and events affecting the geologic setting is contrary to the NAS determination that it is not possible to make scientifically supportable predictions of the probability that a repository barrier will be breached as a result of human intrusion. Consistent with EPA's standards in 40 CFR part 197, the Commission has not included any provisions for the use of active or passive institutional controls to be used in determining the likelihood of processes and events. EPA's and NRC's final regulations for Yucca Mountain provide further details with regard to the adopted approach to human intrusion (66 FR 32073, at 32104, June 13, 2001; 66 FR 55732, at 55760, November 2, 2001).

Multiple Barriers

The petitioners requested performance requirements for the multiple barrier system of the repository specify that each barrier should be designed or selected so that it complements the others and can significantly compensate for uncertainties about the performance of one or more of the other barriers. The regulations in 10 CFR part 63 require the repository to be comprised of multiple barriers (at least one engineered and one natural) and requires DOE to identify each barrier important to waste isolation, describe each barrier's capability to isolate waste, and provide the technical basis for each barrier's capability. In arriving at this approach, the Commission provided a technical basis in the proposed rule for 10 CFR part 63 (64 FR 8647; February 22, 1999) and considered public comments in the final rule for 10 CFR part 63 (66 FR 55758; November 2, 2001). This approach provides the Commission the information necessary to understand how all components of the repository system work together to ensure that the repository system is robust and not wholly dependent on a single barrier. The petitioners' request to include additional qualifying words such as ''significantly compensate for uncertainties'' are neither necessary nor warranted to ensure the Commission is provided sufficient information to make its regulatory decision.

Siting Criteria

The petitioners requested that the presence of significant concentrations of any naturally occurring material not widely available from other sources be added as a potentially adverse condition to be considered under siting criteria. Siting criteria were provided for in 10 CFR part 60, in part, to provide a basis for comparing different sites. The regulations in 10 CFR part 63 do not contain such criteria because the need for siting criteria was removed when the Nuclear Waste Policy Amendments Act directed DOE to characterize a single site. Therefore, the petitioners' suggestion is not relevant to 10 CFR part 63.

Adoption of the Environmental Impact Statement

This section of the petition was reviewed by the Commission and denied in the NRC's final rule, ''NEPA Review Procedures for Geologic Repositories for High-Level Waste'' (54 FR 27864; July 3, 1989).

For the reasons cited in this document, the NRC denies this petition.

Dated at Rockville, Maryland, this 5th day of March, 2002.

For the Nuclear Regulatory Commission.

Andrew L. Bates,

Acting Secretary of the Commission.

[FR Doc. 02–5763 Filed 3–8–02; 8:45 am]

BILLING CODE 7590–01–P

DEPARTMENT OF TRANSPORTATION

Federal Aviation Administration

14 CFR Part 23

[Docket No. CE173; Notice No. 23–01–05–SC]

Special Conditions: Eclipse Aviation Corporation, Model 500 Airplane; Electronic Engine Control System

AGENCY: Federal Aviation Administration (FAA), DOT.

ACTION: Notice of proposed special conditions.

SUMMARY: This notice proposes special conditions for Eclipse Aviation Corporation, 2503 Clark Carr Loop SE, Albuquerque, NM 87106 on the Eclipse Model 500 airplane. This airplane will have a novel or unusual design feature(s) associated with the use of an electronic engine control system instead of a traditional mechanical control system. The applicable airworthiness regulations do not contain adequate or appropriate safety standards for this design feature. These proposed special conditions contain the additional safety standards that the Administrator considers necessary to establish a level of safety equivalent to that established by the existing airworthiness standards.

DATES: Comments must be received on or before April 10, 2002.

ADDRESSES: Comments on this proposal may be mailed in duplicate to: Federal Aviation Administration, Regional Counsel, Attention: Rules Docket No. CE173, 901 Locust, Room 506, Kansas City, Missouri 64106; or delivered in duplicate to the Regional Counsel at the above address. Comments must be marked: Docket No. CE173. Comments may be inspected in the Rules Docket weekdays, except Federal holidays, between 7:30 a.m. and 4 p.m.

FOR FURTHER INFORMATION CONTACT: Mr. Ervin Dvorak, Federal Aviation Administration, Aircraft Certification Service, Small Airplane Directorate, ACE–111, 901 Locust Street, Kansas City, Missouri, 816–329–4123, fax 816–329–4090.

SUPPLEMENTARY INFORMATION:

Comments Invited

Interested persons are invited to participate in the making of these proposed special conditions by submitting such written data, views, or arguments as they may desire. Communications should identify the regulatory docket or notice number and be submitted in duplicate to the address specified above. All communications received on or before the closing date for comments will be considered by the Administrator. The proposals described in this notice may be changed in light of the comments received. All comments received will be available in the Rules Docket for examination by interested persons, both before and after the closing date for comments. A report summarizing each substantive public contact with FAA personnel concerning this rulemaking will be filed in the docket. Persons wishing the FAA to acknowledge receipt of their comments submitted in response to this notice must include with those comments a self-addressed, stamped postcard on which the following statement is made: ''Comments to Docket No. CE173.'' The postcard will be date stamped and returned to the commenter.

Background

On July 12, 2001, Eclipse Aviation Corporation applied for a type certificate for their Model 500 airplane.

The Eclipse Model 500 airplane design includes digital electronic engine control systems, which were not envisaged and are not adequately addressed in 14 CFR part 23. The applicable existing regulations do not address electronic control systems since those were not envisioned at the time. Even though the engine control system will be certificated as part of the engine, the installation of an engine with an electronic control system requires evaluation due to the possible effects on or by other airplane systems (e.g., radio interference with other airplane electronic systems, shared engine and airplane power sources). The regulatory requirements were not applicable to sysems certificated as part of the engine (ref. § 23.1309(f)(1)). Also, electronic control systems often require inputs from airplane data and power sources and outputs to other airplane systems. Although the parts of the system that are not certificated with the engine could be evaluated using the criteria of § 23.1309, the integral nature of systems such as these makes it unfeasible to evaluate the airplane portion of the system without including the engine portion of the system. However, § 23.1309(f)(1) again prevents complete evaluation of the installed airplane system since evaluation of the engine system's effects is not required.

Type Certification Basis

Under the provisions of 14 CFR § 21.17, Eclipse Aviation Corporation must show that the Eclipse Model 500 airplane meets the following:

(1) Applicable provisions of 14 CFR part 23, effective December 18, 1964, as amended by Amendments 23–1 through 23–54 (September 14, 2000).

(2) Part 34 of the Federal Aviation Regulations effective September 10, 1990, plus any amendments in effect on the date of type certification.

(3) Part 36 of the Federal Aviation Regulations effective December 1, 1969, as amended by Amendment 36–1 through the amendment in effect on the date of type certification.

(4) Noise Control Act of 1972.

(5) Special conditions that are not relevant to these proposed special conditions, if any;

(6) Exemptions, if any;

(7) Equivalent level of safety findings, if any; and

(8) Special conditions adopted by this rulemaking action.

If the Administrator finds that the applicable airworthiness regulations (i.e., part 23) do not contain adequate or appropriate safety standards for the Eclipse Model 500 airplane because of a novel or unusual design feature, special conditions are prescribed under the provisions of § 21.16.

Special conditions, as appropriate, as defined in § 11.19, are issued in accordance with § 11.38 after public notice and become part of the type certification basis in accordance with § 21.17(a)(2).

Special conditions are initially applicable to the model for which they are issued. Should the type certificate for that model be amended later to include any other model that incorporates the same novel or unusual design feature, the special conditions would also apply to the other model under the provisions of § 21.101.

Novel or Unusual Design Features

The Eclipse Model 500 airplane will incorporate the following novel or unusual design features: Digital electronic engine control systems. This notice proposes a special condition for a digital electronic engine control system on the Eclipse Model 500 airplane.

Applicability

As discussed above, these special conditions are applicable to the Eclipse Model 500 airplane. Should Eclipse Aviation Corporation apply at a later date for a change to the type certificate to include another model incorporating the same novel or unusual design feature, the special conditions would apply to that model as well under the provisions of § 21.101.

Conclusion

This action affects only certain novel or unusual design features on one model

of airplanes. It is not a rule of general applicability, and it affects only the applicant who applied to the FAA for approval of these features on the airplane.

List of Subjects in 14 CFR Part 23

Aircraft, Aviation safety, Signs and symbols.

Citation

The authority citation for these special conditions is as follows:

Authority: 49 U.S.C. 106(g), 40113 and 44701; 14 CFR 21.16 and 21.17; and 14 CFR 11.38 and 11.19.

The Proposed Special Conditions

Accordingly, the Federal Aviation Administration (FAA) proposes the following special conditions as part of the type certification basis for the Eclipse Aviation Corporation Model 500, airplane.

1. Electronic Engine Control System

The installation of the electronic engine control system must comply with the requirements of § 23.1309(a) through (e) at Amendment 23–49. The intent of this requirement is not to re-evaluate the inherent hardware reliability of the control itself, but rather determine the effects, including environmental effects addressed in § 23.1309(e), on the airplane systems and engine control system when installing the control on the airplane. When appropriate, engine certification data may be used when showing compliance with this requirement.

Issued in Kansas City, Missouri on February 21, 2002.

Michael Gallagher,

Manager, Small Airplane Directorate, Aircraft Certification Service.

[FR Doc. 02–5811 Filed 3–8–02; 8:45 am]

BILLING CODE 4910–13–U

DEPARTMENT OF TRANSPORTATION

Federal Aviation Administration

14 CFR Part 23

[Docket No. CE166; Notice No. 23–01–03–SC]

Special Conditions: CAP Aviation, Model CAP 222; Structural Design & Loads Criteria

AGENCY: Federal Aviation Administration (FAA), DOT.

ACTION: Notice of proposed special conditions.

SUMMARY: This notice proposes special conditions for the CAP Aviation Model No. 222 airplane. This airplane will have a novel or unusual design feature(s) associated with structural design and loads criteria. The applicable airworthiness regulations do not contain adequate or appropriate safety standards for this design feature. These proposed special conditions contain the additional safety standards that the Administrator considers necessary to establish a level of safety equivalent to that established by the existing airworthiness standards.

DATES: Comments must be received on or before July 9, 2002.

ADDRESSES: Comments on this proposal may be mailed in duplicate to: Federal Aviation Administration, Regional Counsel, ACE–7, Attention: Rules Docket, Docket No. CE166, 901 Locust, Room 506, Kansas City, Missouri 64106, or delivered in duplicate to the Regional Counsel at the above address. Comments must be marked: Docket No. CE166. Comments may be inspected in the Rules Docket weekdays, except Federal holidays, between 7:30 a.m. and 4 p.m.

FOR FURTHER INFORMATION CONTACT: Mr. Mike Reyer, Federal Aviation Administration, Aircraft Certification Service, Small Airplane Directorate, ACE–111, 901 Locust, Kansas City, Missouri, 816–329–4131, fax 816–329–4090.

SUPPLEMENTARY INFORMATION:

Comments Invited

Interested persons are invited to participate in the making of these proposed special conditions by submitting such written data, views, or arguments as they may desire. Communications should identify the regulatory docket or notice number and be submitted in duplicate to the address specified above. All communications received on or before the closing date for comments will be considered by the Administrator. The proposals described in this notice may be changed in light of the comments received. All comments received will be available in the Rules Docket for examination by interested persons, both before and after the closing date for comments. A report summarizing each substantive public contact with FAA personnel concerning this rulemaking will be filed in the docket. Persons wishing the FAA to acknowledge receipt of their comments submitted in response to this notice must include with those comments a self-addressed, stamped postcard on which the following statement is made: ''Comments to CE166.'' The postcard will be date stamped and returned to the commenter.

Background

On January 28, 2001, CAP Aviation applied for a type certificate for their new Model CAP 222. The CAP 222 is a two-place tandem seat, all carbon fiber composite made (wing and fuselage) low wing with no high lift devices. It is a fixed gear, unpressurized MTOW 1,600 pound airplane with aerobatic capabilities from −10g to +10g and a roll rate of 500 degrees per second. A single 200 horsepower Textron-Lycoming AEIO–360–A1E engine and two-bladed MT propeller, type MTV–12–B–C/C–183–17e, comprise the propulsion system.

Since the airplane is designed for high performance acrobatic maneuvers with a design flight envelope of +10g, special conditions are required to address the expanded flight envelope. Current 14 CFR Part 23 acrobatic category design requires that the flight envelope shall not be less than +6.0g, −3.0g.

Type Certification Basis

Under the provisions of 14 CFR § 21.17, § 21.29, and § 21.183(c), CAP Aviation must show that the CAP Model 222 meets the applicable provisions of part 23, as amended by Amendments 23–1 through 23–53; 14 CFR part 36, effective December 1, 1969, including amendments 36–1 through the amendment effective on the date of type certification. In addition, the certification basis includes exemptions, if any, equivalent level of safety findings, if any, and the special conditions adopted by this rulemaking action.

If the Administrator finds that the applicable airworthiness regulations (i.e., part 23) do not contain adequate or appropriate safety standards for the CAP Model 222 because of a novel or unusual design feature, special conditions are prescribed under the provisions of § 21.16.

Special conditions, as appropriate, become part of the type certification basis in accordance with § 21.17(a)(2). Special conditions are initially applicable to the model for which they are issued. Should the type certificate for that model be amended later to include any other model that incorporates the same novel or unusual design feature, the special conditions would also apply to the other model under the provisions of § 21.101(a)(1).

Novel or Unusual Design Features

The CAP Model 222 will incorporate the following novel or unusual design features:

Structural Design and Loads Criteria

An analysis of world championship acrobatic sequences shows a significant number of occurrences of high load factors up to ±10g.

Wing

For airplanes capable of performing ''flick rolls'' (snap rolls), the wing should be designed for 100/0 percent maximum wing load distribution, in addition to the roll maneuver criteria of § 23.349(b), unless lower values can be substantiated. These load conditions are based on a V_A and $C_{r\,max}$ corresponding to the selected positive 10g design load factor. Unbalanced aerodynamic moments about the center of gravity must be reacted in a rational or conservative manner, considering the principal masses furnishing the reacting inertia forces. Furthermore, consideration should be given to the fact that pilots may make significant aileron control input above V_A; therefore, a warning prohibiting unrestricted control system input above V_A should be included in the Pilot Operating Handbook/Airplane Flight Manual (POH/AFM) and on a cockpit placard.

Empennage

For airplanes capable of performing ''flick rolls'' (snap rolls), the empennage should be designed for 100/0 percent maximum load distribution unless lower values can be substantiated. The use of rational flight test results is preferred as a basis for design. Pilots may make significant rudder and elevator controls inputs above V_A, therefore, adequate pilot warnings such as discussed above are necessary.

Rational chord load distributions should be used for the vertical and horizontal tail surfaces. These may be developed by flight test data, wind tunnel test data, theoretical analysis, or a combination thereof.

Gyroscopic Forces

Since the airplane will be performing maneuvers that generate high pitch and yaw rates, the airplane, including the engine, engine mount, and fuselage attachment, must be designed for rational gyroscopic forces generated in specific acrobatic maneuvers.

Fatigue

The fatigue load should be developed from representative sequences and cross country flight profiles.

Applicability

As discussed above, these special conditions are applicable to the Model CAP 222. Should CAP Aviation apply at a later date for a change to the type certificate to include another model incorporating the same novel or unusual design feature, the special conditions would apply to that model as well under the provisions of § 21.101(a)(1).

Conclusion

This action affects only certain novel or unusual design features on the CAP Model 222 airplane. It is not a rule of general applicability, and it affects only the applicant who applied to the FAA for approval of these features on the airplane.

List of Subjects in 14 CFR Part 23

Aircraft, Aviation safety, Signs and symbols.

Citation

The authority citation for these special conditions is as follows:

Authority: 49 U.S.C. 106(g), 40113 and 44701; 14 CFR 21.16 and 21.17; and 14 CFR 11.28 and 11.29(b).

The Proposed Special Conditions

Accordingly, the Federal Aviation Administration (FAA) proposes the following special conditions as part of the type certification basis for CAP Model 222 airplanes.

Structural Design and Loads Criteria

1. *Wing.* For the ''flick roll'' condition in § 23.347(b), a 100/0 percent wing load distribution should be used for wing design. Accurate flight test load measurements may be used in lieu of the 100/0 percent maximum airload distribution. A notation shall be placed in the Limitations Section of the POH/AFM, and an appropriate warning placard shall be installed on the main instrument panel prohibiting full or abrupt control inputs above V_A.

2. *Empennage.* The horizontal tail and its attachments to the fuselage, and the aft fuselage must be designed for the worst case load condition using either accurate flight test load measurements or an acceptable analytical method. Unsymmetrical load combinations acting on the wing and on the horizontal tail are assumed to be turning the airplane in the same direction around the roll axis. A notation shall be placed in the limitation section of the POH/AFM, and an appropriate warning placard shall be installed on the main instrument panel prohibiting full or abrupt control inputs above V_A. Rational chord load distributions should be used for the vertical and horizontal tail surfaces. Appropriate data must be used to develop unsymmetrical loading of the horizontal tail surface and as a basis for fuselage torsion. This must include simultaneous application of full rudder and elevator input.

3. *Gyroscopic Forces.* The airplane, including the engine, engine mount, and fuselage attachment, must be designed for rational gyroscopic forces generated in acrobatic maneuvers.

4. *Fatigue.* Representative acrobatic sequences and cross-country flight profiles must be used in establishing a rational fatigue load spectrum.

Issued in Kansas City, Missouri on February 21, 2002.

Michael Gallagher,

Manager, Small Airplane Directorate, Aircraft Certification Service.

[FR Doc. 02–5812 Filed 3–8–02; 8:45 am]

BILLING CODE 4910–13–U

DEPARTMENT OF TRANSPORTATION

Federal Aviation Administration

14 CFR Part 39

[Docket No. 92–ANE–56–AD]

RIN 2120–AA64

Airworthiness Directives; Textron Lycoming Division, AVCO Corporation Fuel Injected Reciprocating Engines

AGENCY: Federal Aviation Administration, DOT.

ACTION: Notice of proposed rulemaking (NPRM).

SUMMARY: This document proposes the supersedure of an existing airworthiness directive (AD), applicable to certain Textron Lycoming fuel injected reciprocating engines, that currently requires inspection, and replacement if necessary, of externally mounted fuel injector fuel lines. Since the issuance of the existing AD, additional engine series have been identified with the potential for the same problem and necessitate being included in the list of Textron Lycoming fuel injected reciprocating engine series, to the AD's applicability. This proposal is prompted by the need to ensure that the additional Textron Lycoming fuel injected engine series listed in this proposed rule receive the same inspections as series covered by the current AD. The actions specified by the proposed AD are intended to prevent failure of the fuel injector fuel lines allowing fuel to spray into the engine compartment, resulting in an engine fire.

DATES: Comments must be received by May 10, 2002.

ADDRESSES: Submit comments to the Federal Aviation Administration (FAA), New England Region, Office of the Regional Counsel, Attention: Rules

Docket No. 92–ANE–56–AD, 12 New England Executive Park, Burlington, MA 01803–5299. Comments may also be sent via the Internet using the following address: ''*9-ane-adcomment@faa.gov*''. Comments sent via the Internet must contain the docket number in the subject line. Comments may be inspected at this location between 8 a.m. and 4:30 p.m., Monday through Friday, except Federal holidays. The service information referenced in the proposed rule may be obtained from Textron Lycoming, 652 Oliver Street, Williamsport, PA 17701, telephone: (570) 323–6181. This information may be examined at the FAA, New England Region, Office of the Regional Counsel, 12 New England Executive Park, Burlington, MA.

FOR FURTHER INFORMATION CONTACT: Norman Perenson, Aerospace Engineer, New York Aircraft Certification Office, FAA, Engine and Propeller Directorate, 10 Fifth Street, 3rd floor, Valley Stream, NY 11581–1200; telephone: (516) 256–7537, fax: (516) 568–2716.

SUPPLEMENTARY INFORMATION:

Comments Invited

Interested persons are invited to participate in the making of the proposed rule by submitting such written data, views, or arguments as they may desire. Communications should identify the Rules Docket number and be submitted to the address specified above. All communications received on or before the closing date for comments, specified above, will be considered before taking action on the proposed rule. The proposals contained in this action may be changed in light of the comments received.

Comments are specifically invited on the overall regulatory, economic, environmental, and energy aspects of the proposed rule. All comments submitted will be available, both before and after the closing date for comments, in the Rules Docket for examination by interested persons. A report summarizing each FAA-public contact concerned with the substance of this proposal will be filed in the Rules Docket.

Commenters wishing the FAA to acknowledge receipt of their comments submitted in response to this action must submit a self-addressed, stamped postcard on which the following statement is made: ''Comments to Docket Number 92–ANE–56–AD.'' The postcard will be date stamped and returned to the commenter.

Availability of NPRM's

Any person may obtain a copy of this NPRM by submitting a request to the FAA, New England Region, Office of the Regional Counsel, Attention: Rules Docket No. 92–ANE–56–AD, 12 New England Executive Park, Burlington, MA 01803–5299.

Discussion

On June 5, 1992, the FAA issued a priority letter AD 92–12–10, applicable only to Textron Lycoming Series TIO–540–S1AD engines, which requires inspecting, and if necessary, replacing the externally mounted fuel injector fuel lines. The FAA subsequently determined that similar externally mounted fuel injector fuel line configurations existed on other Textron Lycoming fuel injected engines. Since an unsafe condition was identified that was likely to exist or develop on other Textron Lycoming engines of the same type design, the FAA issued AD 93–02–05, Amendment 39–8487 (58 FR 26056, dated April 30, 1993), to require inspecting, and if necessary replacing, the fuel injector fuel lines. That action was prompted by reports of failures of fuel injector fuel lines that were missing support clamps. The requirements of that AD were intended to prevent failure of the fuel injector fuel lines allowing fuel to spray into the engine compartment, resulting in an engine fire.

Since that AD was issued, the FAA has identified models AEIO–320, AIO–320, IO–320, LIO–320, AEIO–360, AIO–360, HIO–360, IO–360, IVO–360, LIO–360, TIO–360, IGO–480, AEIO–540, IGO–540, IO–540, IVO–540, LTIO–540, TIO–540, TIVO–540, and IO–720 series engines that require inspecting, and if necessary replacing externally mounted fuel lines.

Service Information

The FAA has reviewed and approved the technical contents of Textron Lycoming Mandatory Service Bulletin (MSB) No. 342D, dated July 10, 2001, that describes procedures for inspecting, and if necessary replacing the fuel injector fuel lines. Textron Lycoming MSB No. 342D supersedes Textron Lycoming MSB No. 342C, MSB No. 342B, Supplement No. 1 to MSB 342B, MSB 342A, and MSB 342.

Proposed Actions

Since an unsafe condition has been identified that is likely to exist or develop on other Textron Lycoming engines of this same type design, the proposed AD would supersede AD 93–02–05 to add additional Textron Lycoming engine models to the applicability of the AD. The actions would be required to be done in accordance with the service bulletin described previously.

Economic Analysis

There are about 4,160 engines of the affected design in the worldwide fleet. The FAA estimates that 2,496 engines installed on aircraft of U.S. registry would be affected by this proposed AD, that it would take about 1 work hour to inspect and replace all lines on a four-cylinder engine, 1.5 work hours to inspect and replace all lines on a six-cylinder engine, and 2 hours to inspect and replace all lines on an eight-cylinder engine, and that the average labor rate is $60 per work hour. Required parts would cost about $440.00 for a four-cylinder engine, $660.00 for a six-cylinder engine, and $880.00 for an eight-cylinder engine. Based on these figures, the total cost per airplane of the proposed AD on U.S. operators is estimated as follows:

- $500.00 for a four-cylinder engine.
- $750.00 for a six-cylinder engine.
- $1000.00 for an eight-cylinder engine.

Regulatory Analysis

This proposal does not have federalism implications, as defined in Executive Order 13132, because it would not have a substantial direct effect on the States, on the relationship between the national government and the States, or on the distribution of power and responsibilities among the various levels of government. Accordingly, the FAA has not consulted with state authorities prior to publication of this proposal.

For the reasons discussed above, I certify that this proposed regulation (1) is not a ''significant regulatory action'' under Executive Order 12866; (2) is not a ''significant rule'' under the DOT Regulatory Policies and Procedures (44 FR 11034, February 26, 1979); and (3) if promulgated, will not have a significant economic impact, positive or negative, on a substantial number of small entities under the criteria of the Regulatory Flexibility Act. A copy of the draft regulatory evaluation prepared for this action is contained in the Rules Docket. A copy of it may be obtained by contacting the Rules Docket at the location provided under the caption **ADDRESSES.**

List of Subjects in 14 CFR Part 39

Air transportation, Aircraft, Aviation safety, Safety.

The Proposed Amendment

Accordingly, pursuant to the authority delegated to me by the Administrator, the Federal Aviation

Administration proposes to amend part 39 of the Federal Aviation Regulations (14 CFR part 39) as follows:

PART 39—AIRWORTHINESS DIRECTIVES

1. The authority citation for part 39 continues to read as follows:

Authority: 49 U.S.C. 106(g), 40113, 44701.

§ 39.13 [Amended]

2. Section 39.13 is amended by removing Amendment 39–8487 (58 26056, April 30, 1993), and by adding a new airworthiness directive, to read as follows:

Textron Lycoming Division, AVCO Corporation Docket No. 92–ANE–56–AD. Supersedes AD 93–02–05, Amendment 39–8487.

Applicability

Textron Lycoming fuel injected reciprocating engines incorporating externally mounted fuel injection lines as listed in the following Table 1:

TABLE 1.—ENGINE MODELS AFFECTED

Engine	Model
AEIO–320	–D1B, –D2B, –E1B, –E2B
AIO–320 ..	–A1B, –BIB, –C1B
IO–320	–B1A, –B1C, –C1A, –D1A, –D1B, –E1A, –E1B, –E2A, –E2B
LIO–320 ...	–B1A, –C1A
AEIO–360	–A1A, –A1B, –A1B6, –A1D, –A1E, –A1E6, –B1F, –B2F, –B1G6, –B4A, –H1A, –H1B
AIO–360 –A1A, –A1B, –B1B.	
HIO–360 ..	–A1A, –A1B, –B1A, –C1A, –C1B, –D1A, –E1AD, E1BD, –F1AD
IO–360	–A1A, –A1B, –A1B6, –A1B6D, –A1C, –A1D, –A1D6, –A2A, –A2B, –A3B6, –A3B6D, –B1B, –B1D, –B1E, –B1F, –B1G6, –B2F, –B2F6, –B4A, –C1A, –C1B, –C1C, –C1C6, –C1D6, –C1E6, –C1F, –C1G6, –C2G6, –J1A6D, –L2A, –M1A,
IVO–360 ..	–A1A
LIO–360 ...	–C1E6
TIO–360 ..	–A1B, –C1A6D
IGO–480 ..	–A1B6
AEIO–540	–D4A5, –D4B5, –D4D5, –L1B5, –L1B5D, –L1D5
IGO–540 ..	–B1A, –B1C

TABLE 1.—ENGINE MODELS AFFECTED—Continued

Engine	Model
IO–540	–A1A5, –AA1A5, –AA1B5, –AB1A5, –AC1A5, –B1A5, –B1C5, –C1B5, –C4B5, –C4D5D, –D4A5, –E1A5, –E1B5, –G1A5, –G1B5, –G1C5, –G1D5, –G1E5, –G1F5, –J4A5, –V4A5D, –K1A5, –KIA5D, –KIB5, –KIC5, –KID5, –K1E5, –K1E5D, –KIF5, –K1J5, –KIF5D, –K1G5, –K1G5D, –K1H5, –K1J5D, –K1K5, –K1E5, –K1E5D, –K1F5, –K1J5, –L1C5, –M1A5, –M1B5D, –N1A5, –P1A5, –R1A5, –S1A5, –T4A5D, –T4B5, –T4B5D, –T4C5D, –V4A5, –V4A5D, –W1A5D, –W3A5D
IVO–540 ..	–A1A
LTIO–540	–F2BD, –J2B, –J2BD, –N2BD, –R2AD, –U2A, –V2AD, –W2A
TIO–540 ..	–A1A, –A1B, –A2A, –A2B, –A2C, –AE2A, –AH1A, –AA1AD, –AF1A, –AF1B, –AG1A, –AB1AD, –AB1BD, –AH1A, –AJ1A, –AK1A, –C1A, –E1A, –G1A, –F2BD, –J2B, –J2BD, –N2BD, –R2AD, –S1AD, –U2A, –V2AD, –W2A
TIVO–540	–A2A
IO–720	–A1A, –A1B, –D1B, –D1BD, –D1C, –D1CD, –B1B, –B1BD, –C1B

Engine models in Table 1 are installed on, but not limited to Piper PA–24 Comanche, PA–30 and PA–39 Twin Comanche, PA–28 Arrow, and PA–23 Aztec; Beech 23 Musketeer; Mooney 20, and Cessna 177 Cardinal aircraft.

Note 1: This AD is applicable to engines with an ''I'' in the prefix of the model designation that have externally mounted fuel injection lines. This AD is not applicable to engines having internally mounted fuel injection lines, which are not accessible.

Note 2: This airworthiness directive (AD) applies to each engine identified in the preceding applicability provision, regardless of whether it has been modified, altered, or repaired in the area subject to the requirements of this AD. For engines that have been modified, altered, or repaired so that the performance of the requirements of this AD is affected, the owner/operator must request approval for an alternative method of compliance in accordance with paragraph (d) of this AD. The request should include an assessment of the effect of the modification, alteration, or repair on the unsafe condition addressed by this AD; and, if the unsafe condition has not been eliminated, the request should include specific proposed actions to address it.

Compliance

Required as indicated, unless already done.

To prevent failure of the fuel injector fuel lines allowing fuel to spray into the engine compartment, resulting in an engine fire, do the following:

Engines That Have Been Previously Inspected

(a) For engines that have been inspected in accordance with Textron Lycoming Mandatory Service Bulletin (MSB) No. 342, Textron Lycoming MSB No. 342A, Textron Lycoming MSB No. 342B, Supplement No. 1 to MSB No. 342B, and Textron Lycoming MSB No. 342C, inspect in accordance with paragraph (c) of this AD.

Engines That Have Not Been Inspected

(b) For engines that have not had initial inspections previously done in accordance with Textron Lycoming MSB No. 342, Textron Lycoming MSB No. 342A, Textron Lycoming MSB No. 342B, Supplement No. 1 to MSB No. 342B, and Textron Lycoming MSB No. 342C, inspect in accordance with Textron Lycoming MSB No. 342D, dated July 10, 2001 as follows:

(1) For engines that have not yet had any fuel line maintenance done, or have not had any fuel line maintenance done since the last overhaul, inspect within 50 hours time-in-service after the effective date of this AD, and replace as necessary, the fuel injector fuel lines and clamps between the fuel manifold and the fuel injector nozzles that do not meet all conditions specified in Textron Lycoming MSB No. 342D, dated July 10, 2001.

(2) For all other engines, inspect within 10 hours time-in-service after the effective date of this AD, and replace as necessary, the fuel injector fuel lines and clamps between the fuel manifold and the fuel injector nozzles that do not meet all conditions specified in Textron Lycoming MSB No. 342D, dated July 10, 2001.

Repetitive Inspections

(c) Thereafter, at each annual inspection, at each 100-hour inspection, at each engine overhaul, and after any maintenance has been done on the engine where the fuel injector fuel lines have been disconnected, moved, or loosened, inspect the fuel injector fuel lines and clamps and replace as necessary any fuel injector fuel line and clamp that does not meet all conditions specified in Textron Lycoming MSB No. 342D, dated July 10, 2001.

Alternative Methods of Compliance

(d) An alternative method of compliance or adjustment of the compliance time that provides an acceptable level of safety may be used if approved by the Manager, New York Aircraft Certification Office (ACO). Operators must submit their request through an appropriate FAA Principal Maintenance Inspector, who may add comments and then send it to the Manager, New York ACO.

Note 3: Information concerning the existence of approved alternative methods of compliance with this airworthiness directive, if any, may be obtained from the New York ACO.

Special Flight Permits

(e) Special flight permits may be issued in accordance with §§ 21.197 and 21.199 of the Federal Aviation Regulations (14 CFR 21.197

and 21.199) to operate the aircraft to a location where the requirements of this AD can be done.

Issued in Burlington, Massachusetts, on March 1, 2002.

Mark C. Fulmer,

Acting Manager, Engine and Propeller Directorate, Aircraft Certification Service.

[FR Doc. 02–5691 Filed 3–8–02; 8:45 am]

BILLING CODE 4910–13–U

DEPARTMENT OF TRANSPORTATION

Federal Aviation Administration

14 CFR Part 39

[Docket No. 2002–CE–03–AD]

RIN 2120–AA64

Airworthiness Directives; Air Tractor, Inc. Model AT–602 Airplanes

AGENCY: Federal Aviation Administration, DOT.

ACTION: Notice of proposed rulemaking (NPRM).

SUMMARY: This document proposes to adopt a new airworthiness directive (AD) that would apply to certain Air Tractor, Inc. (Air Tractor) Model AT–602 airplanes. This proposed AD would require you to repetitively inspect the left hand upper longeron and upper diagonal tube of the fuselage frame for cracks and repair any cracks found. This proposed AD would also require eventual modification of this area to terminate the repetitive inspection. This proposed AD is the result of reports of excessive movement in the empennage due to the loss of fuselage torsional rigidity. The actions specified by this proposed AD are intended to prevent failure of the fuselage caused by cracks. Such failure could result in loss of control of the airplane.

DATES: The Federal Aviation Administration (FAA) must receive any comments on this proposed rule on or before May 10, 2002.

ADDRESSES: Submit comments to FAA, Central Region, Office of the Regional Counsel, Attention: Rules Docket No. 2002–CE–03–AD, 901 Locust, Room 506, Kansas City, Missouri 64106. You may view any comments at this location between 8 a.m. and 4 p.m., Monday through Friday, except Federal holidays. You may also send comments electronically to the following address: *9–ACE–7–Docket@faa.gov.* Comments sent electronically must contain ''Docket No. 2002–CE–03–AD'' in the subject line. If you send comments electronically as attached electronic files, the files must be formatted in Microsoft Work 97 for Windows or ASCII text.

You may get service information that applies to this proposed AD from Air Tractor, Incorporated, P.O. Box 485, Olney, Texas 76374. You may also view this information at the Rules Docket at the address above.

FOR FURTHER INFORMATION CONTACT: Andrew D. McAnaul, Aerospace Engineer, FAA, Fort Worth Airplane Certification Office, 2601 Meacham Boulevard, Fort Worth, Texas 76193–0150; telephone: (817) 222–5156; facsimile: (817) 222–5960.

SUPPLEMENTARY INFORMATION:

Comments Invited

How Do I Comment on This Proposed AD?

The FAA invites comments on this proposed rule. You may submit whatever written data, views, or arguments you choose. You need to include the rule's docket number and submit your comments to the address specified under the caption **ADDRESSES.** We will consider all comments received on or before the closing date. We may amend this proposed rule in light of comments received. Factual information that supports your ideas and suggestions is extremely helpful in evaluating the effectiveness of this proposed AD action and determining whether we need to take additional rulemaking action.

Are There Any Specific Portions of This Proposed AD I Should Pay Attention to?

The FAA specifically invites comments on the overall regulatory, economic, environmental, and energy aspects of this proposed rule that might suggest a need to modify the rule. You may view all comments we receive before and after the closing date of the rule in the Rules Docket. We will file a report in the Rules Docket that summarizes each contact we have with the public that concerns the substantive parts of this proposed AD.

How Can I Be Sure FAA Receives My Comment?

If you want FAA to acknowledge the receipt of your comments, you must include a self-addressed, stamped postcard. On the postcard, write ''Comments to Docket No. 2002–CE–03–AD.'' We will date stamp and mail the postcard back to you.

Discussion

What Events Have Caused This Proposed AD?

The FAA has received reports of three occurrences where cracks were found on the left hand upper longeron and upper diagonal support tubes intersect on the left hand side of the fuselage frame just forward of the vertical fin front spar attachment point on Model AT–602 airplanes. The crack starts at the forward edge of the weld where the tubes come together. We have determined that the cracks are a result of high vertical tail loads during repeated hard turns. The cracks were found by the pilot and/or ground crew when they noticed excessive movement in the empennage due to the loss of torsional rigidity.

What Are the Consequences if the Condition Is Not Corrected?

This condition, if not corrected, could cause the fuselage to fail. Such failure could result in loss of control of the airplane.

Is There Service Information That Applies to This Subject?

Air Tractor has issued the following:

—Snow Engineering Co. Service Letter #195, dated February 4, 2000;
—Snow Engineering Co. Service Letter #213, dated November 13, 2001;
—Snow Engineering Co. Process Specification #102, Revised January 5, 2001;
—Snow Engineering Co. Process Specification #120, Revised December 16, 1997; and
—Snow Engineering Co. Process Specification #125, dated November 28, 1993.

What Are the Provisions of This Service Information?

These service bulletins include procedures for:

—Repetitively inspecting the upper longeron and upper diagonal tube on the left hand side of the aft fuselage structure for cracks; and
—Modifying this area by installing reinforcement parts.

The FAA's Determination and an Explanation of the Provisions of This Proposed AD

What Has FAA Decided?

After examining the circumstances and reviewing all available information related to the incidents described above, we have determined that:

—The unsafe condition referenced in this document exists or could develop on other Air Tractor Model AT–602 airplanes of the same type design;
—The actions specified in the previously-referenced service information should be accomplished on the affected airplanes; and
—AD action should be taken in order to correct this unsafe condition.

What Would This Proposed AD Require?

This proposed AD would require you to repetitively inspect the upper longeron and upper diagonal tube on the left hand side of the aft fuselage structure for cracks, repair any cracks found, and modifying this area by installing reinforcement parts.

Why Are the Air Tractor AT–400, AT–500, and AT–800 Series Airplanes Not Included in This Proposed AD?

The Air Tractor AT–400, AT–500, and AT–800 series airplanes have a similar design in the upper longeron in the aft fuselage structure. However, we have not received any reports of damage to this area on those airplanes. The only reports of damage are those previously referenced on the Model AT–602 airplanes.

Air Tractor is currently researching this subject on the AT–400, AT–500, and AT–800 series airplanes. Based on this research and if justified, we may propose additional rulemaking on this subject for these other airplanes.

Cost Impact

How Many Airplanes Would This Proposed AD Impact?

We estimate that this proposed AD affects 91 airplanes in the U.S. registry.

What Would Be the Cost Impact of This Proposed AD on Owners/Operators of the Affected Airplanes?

We estimate the following costs to accomplish the proposed inspection(s):

Labor cost	Parts cost	Total cost per airplane	Total cost on U.S. operators
1 workhour × $60 = $60	No parts required	$60	$60 × 91 = $5,460

We estimate the following costs to accomplish the proposed modification:

Labor cost	Parts cost	Total cost per airplane
8 workhours × $60 = $480	Manufacturer will provide parts at no charge	$480

Regulatory Impact

Would This Proposed AD Impact Various Entities?

The regulations proposed herein would not have a substantial direct effect on the States, on the relationship between the national government and the States, or on the distribution of power and responsibilities among the various levels of government. Therefore, it is determined that this proposed rule would not have federalism implications under Executive Order 13132.

Would This Proposed AD Involve a Significant Rule or Regulatory Action?

For the reasons discussed above, I certify that this proposed action (1) is not a ''significant regulatory action'' under Executive Order 12866; (2) is not a ''significant rule'' under DOT Regulatory Policies and Procedures (44 FR 11034, February 26, 1979); and (3) if promulgated, will not have a significant economic impact, positive or negative, on a substantial number of small entities under the criteria of the Regulatory Flexibility Act. A copy of the draft regulatory evaluation prepared for this action has been placed in the Rules Docket. A copy of it may be obtained by contacting the Rules Docket at the location provided under the caption **ADDRESSES**.

List of Subjects in 14 CFR Part 39

Air transportation, Aircraft, Aviation safety, Safety.

The Proposed Amendment

Accordingly, under the authority delegated to me by the Administrator, the Federal Aviation Administration proposes to amend part 39 of the Federal Aviation Regulations (14 CFR part 39) as follows:

PART 39—AIRWORTHINESS DIRECTIVES

1. The authority citation for part 39 continues to read as follows:

Authority: 49 U.S.C. 106(g), 40113, 44701.

§ 39.13 [Amended]

2. FAA amends § 39.13 by adding a new airworthiness directive (AD) to read as follows:

Air Tractor, Inc.: Docket No. 2002–CE–03–AD.

(a) *What airplanes are affected by this AD?* This AD affects Model AT–602 airplanes, serial numbers 602–0337 through 602–0569, that are certificated in any category.

(b) *Who must comply with this AD?* Anyone who wishes to operate any of the airplanes identified in paragraph (a) of this AD must comply with this AD.

(c) *What problem does this AD address?* The actions specified by this AD are intended to prevent failure of the empennage caused by cracks. Such failure could result in loss of control of the airplane.

(d) What actions must I accomplish to address this problem? To address this problem, you must accomplish the following:

Actions	Compliance	Procedures
(1) Inspect the upper longeron and upper diagonal tube on the left hand side of the fuselage frame, just forward of the vertical fin front spar attachment, for cracks.	Initially inspect within the next 50 hours time-in-service (TIS) after the effective date of this AD and thereafter at intervals not to exceed 100 hours TIS until 12 months after the effective date of this AD.	In accordance with Snow Engineering Co. Service Letter #195, dated February 4, 2000, and applicable maintenance manual.

Actions	Compliance	Procedures
(2) If cracks are found during any inspection required in paragraph (d)(1) of this AD, accomplish the following:. (i) Obtain a repair scheme from the manufacturer through the FAA at the address specified in paragraph (f) of this AD; and (ii) Incorporate this repair scheme	Prior to further flight after the inspection in which the cracks are found. The incorporation of the repair scheme will terminate the repetitive inspections.	In accordance with the repair scheme obtained from Air Tractor, Incorporated, P.O. Box 485, Olney, Texas 76374. Obtain this repair scheme through the FAA at the address specified in paragraph (f) of this AD.
(3) If no cracks were found during any inspection required in paragraph (d)(1) of this AD, accomplish the following:. (i) Inspect as required in paragraph (d)(1) to ensure there are no cracks; and (ii) Install gusset part numbers 11946–1 and 11686–1 (or FAA-approved equivalent part numbers)	Within the next 12 calendar months after the effective date of this AD. You may install the reinforcement gussets at any time to terminate the repetitive inspections provided that you inspect prior to installation and no cracks are found.	In accordance with Snow Engineering Co. Service Letter #213, dated November 13, 2001, Snow Engineering Co. Process Specification #102, revised January 5, 2001, Snow Engineering Co. Process Specification #120, revised December 16, 1997, and Snow Engineering Co. Process Specification #125, dated November 28, 1993, as specified in Service Letter #213, and the applicable maintenance manual.

(e) *Can I comply with this AD in any other way?* You may use an alternative method of compliance or adjust the compliance time if:

(1) Your alternative method of compliance provides an equivalent level of safety; and

(2) The Manager, Fort Worth Aircraft Certification Office (ACO), approves your alternative. Submit your request through an FAA Principal Maintenance Inspector, who may add comments and then send it to the Manager, Fort Worth ACO.

Note: This AD applies to each airplane identified in paragraph (a) of this AD, regardless of whether it has been modified, altered, or repaired in the area subject to the requirements of this AD. For airplanes that have been modified, altered, or repaired so that the performance of the requirements of this AD is affected, the owner/operator must request approval for an alternative method of compliance in accordance with paragraph (e) of this AD. The request should include an assessment of the effect of the modification, alteration, or repair on the unsafe condition addressed by this AD; and, if you have not eliminated the unsafe condition, specific actions you propose to address it.

(f) *Where can I get information about any already-approved alternative methods of compliance?* Contact Andrew D. McAnaul, Aerospace Engineer, FAA, Fort Worth Airplane Certification Office, 2601 Meacham Boulevard, Fort Worth, Texas 76193–0150; telephone: (817) 222–5156; facsimile: (817) 222–5960.

(g) *What if I need to fly the airplane to another location to comply with this AD?* The FAA can issue a special flight permit under sections 21.197 and 21.199 of the Federal Aviation Regulations (14 CFR 21.197 and 21.199) to operate your airplane to a location where you can accomplish the requirements of this AD.

(h) *How do I get copies of the documents referenced in this AD?* You may get copies of the documents referenced in this AD from Air Tractor, Incorporated, P.O. Box 485, Olney, Texas 76374. You may view these documents at FAA, Central Region, Office of the Regional Counsel, 901 Locust, Room 506, Kansas City, Missouri 64106.

Issued in Kansas City, Missouri, on March 4, 2002.

James E. Jackson,

Acting Manager, Small Airplane Directorate, Aircraft Certification Service.

[FR Doc. 02–5690 Filed 3–8–02; 8:45 am]

BILLING CODE 4910–13–U

DEPARTMENT OF TRANSPORTATION

Federal Aviation Administration

14 CFR Part 71

[Airspace Docket No. 01–ANM–17]

Proposed Modification of Class E Airspace, Newport, OR

AGENCY: Federal Aviation Administration (FAA), DOT.

ACTION: Notice of proposed rulemaking (NPRM).

SUMMARY: This action proposes to modify existing Class E airspace at Newport, OR. Newly developed Area Navigation (RNAV) Special Standard Instrument Approach Procedure (SIAP) and the certification of new weather reporting equipment at the Newport Municipal Airport has made this proposal necessary. Additional Class E 700-feet and 1,200-feet controlled airspace, above the surface of the earth is required to contain aircraft executing the RNAV RWY 16 Global Positioning System (GPS) SIAP at Newport Municipal Airport. Newport Municipal Airport currently has part-time Class E–2 airspace due to the lack of weather reporting. New weather reporting equipment has been installed and certified, therefore, this proposal also changes the Class E–2 Airspace at Newport, OR, to 24-hour operation. The intended effect of this action is to provide adequate Class E controlled airspace between the terminal and the en route phase of flight for aircraft executing Instrument Flight Rules (IFR) operations at Newport Municipal Airport, Newport, OR.

DATES: Comments must be received on or before April 25, 2002.

ADDRESSES: Send comments on the proposal in triplicate to: Manager, Airspace Branch, ANM–520, Federal Aviation Administration, Docket No. 01–ANM–17, 1601 Lind Avenue SW, Renton, Washington 98055–4056.

An informal docket may also be examined during normal business hours in the office of the Manager, Air Traffic Division, Airspace Branch, at the address listed above.

FOR FURTHER INFORMATION CONTACT: Brian Durham, ANM–520.7, Federal Aviation Administration, Docket No. 01–ANM–17, 1601 Lind Avenue SW., Renton, Washington 98055–4056: telephone number: (425) 227–2527.

SUPPLEMENTARY INFORMATION:

Comments Invited

Interested parties are invited to participate in this proposed rulemaking by submitting such written data, views, or arguments, as they may desire. Comments that provide the factual basis supporting the views and suggestions presented are particularly helpful in developing reasoned regulatory decisions on the proposal. Comments are specifically invited on the overall regulatory, aeronautical, economic, environmental, and energy related aspects of the proposal. Communications should identify the airspace docket number and be submitted in triplicate to the address listed above. Commenters wishing the FAA to acknowledge receipt of their comments on this action must submit, with those comments, a self-addressed

stamped postcard on which the following statement is made: ''Comments to Airspace Docket No. 01–ANM–17.'' The postcard will be date/time stamped and returned to the commenter. All communications received on or before the specified closing date for comments will be considered before taking action on the proposed rule. The proposal contained in this action may be changed in the light of comments received. All comments submitted will be available for examination at the address listed above both before and after the closing date for comments. A report summarizing each substantive public contact with FAA personnel concerned with this rulemaking will be filed in the docket.

Availability of NPRM's

Any person may obtain a copy of this NPRM by submitting a request to the Federal Aviation Administration, Airspace Branch, ANM–520, 1601 Lind Avenue SW, Renton, Washington 98055–4056. Communications must identify the docket number of this NPRM. Persons interested in being placed on a mailing list for future NPRM's should also request a copy of Advisory Circular No. 11–2A, which describes the application procedure.

The Proposal

The FAA is considering an amendment to Title 14 Code of Federal Regulations, part 71 (14 CFR part 71) by modifying existing Class E airspace at Newport, OR. Newly developed RNAV RWY 16 SIAP at the Newport Municipal Airport and newly installed 24-hour weather reporting equipment has made this proposal necessary. Additional Class E 700-feet and E 1,200-feet controlled airspace, above the surface of the earth is required to contain aircraft executing the Instrument Flight Rules (IFR) operations, at Newport Municipal Airport. Newport Municipal Airport currently has part-time Class E–2 airspace due to the lack of weather reporting. New weather reporting equipment has been installed and certified; therefore, this proposal also changes the Class E–2 Airspace at Newport, OR, to a 24-hour operation. The FAA establishes Class E airspace where necessary to contain aircraft transitioning between the terminal and en route environments. The intended effect of this proposal is designed to provide for the safe and efficient use of the navigable airspace. This proposal would promote safe flight operations under IFR at the Newport Municipal Airport and between the terminal and en route transition stages.

The area would be depicted on aeronautical charts for pilot reference. The coordinates for this airspace docket are based on North American Datum 83. Class E airspace designated as surface area for an airport, are published in Paragraph 6002; Class E airspace areas extending upward from 700-feet or move above the surface of the earth, are published in Paragraph 6005, of FAA Order 7400.9J, dated August 31, 2001, and effective September 16, 2001, which is incorporated by reference in 14 CFR 71.1. The Class E airspace designations listed in this document will be published subsequently in the Order.

The FAA has determined that this proposed regulation only involves an established body of technical regulations for which frequent and routine amendments are necessary to keep them operationally current. It, therefore, (1) is not a ''significant regulatory action'' under Executive Order 12866; (2) is not a ''significant rule'' under DOT Regulatory Policies and Procedures (44 FR 11013; February 26, 1979); and (3) does not warrant preparation of a Regulatory Evaluation as the anticipated impact is so minimal. Since this is a routine matter that will only affect air traffic procedures and air navigation, it is certified that this rule, when promulgated, will not have a significant economic impact on a substantial number of small entities under the criteria of the Regulatory Flexibility Act.

List of Subjects in 14 CFR Part 71

Airspace, Incorporation by reference, Navigation (air).

The Proposed Amendment

In consideration of the foregoing, the Federal Aviation Administration proposes to amend 14 CFR part 71 as follows:

PART 71–DESIGNATION OF CLASS A, CLASS B, CLASS C, CLASS D, AND CLASS E AIRSPACE AREAS; AIRWAYS; ROUTES; AND REPORTING POINTS

1. The authority citation for 14 CFR part 71 continues to read as follows:

Authority: 49 U.S.C. 106(g), 40103, 40113, 40120; E.O. 10854, 24 FR 9565, 3 CFR, 1959–1963 Comp., p. 389.

§ 71.1 [Amended]

2. The incorporation by reference in 14 CFR 71.1 of the Federal Aviation Administration Order 7400.9J, Airspace Designations and Reporting Points, dated August 31, 2001, and effective September 16, 2001, is amended as follows:

Paragraph 6002 Class E airspace designated as surface area for an airport.

* * * * *

ANM OR E2 Newport, OR [Revised]

Newport Municipal Airport, OR
(Lat. 44°34′49″ N, long. 124°03′28″ W.)
Newport VORTAC
(Lat. 44°34′31″ N, long. 124°03′38″ W.)

Within a 4-mile radius of the Newport Municipial Airport, and within 3.5 miles each side of the Newport VORTAC 357° radial extending from the 4-mile radius to 7.9 miles north of the VORTAC.

* * * * *

Paragraph 6005 Class E airspace areas extending upward from 700-feet or more above the surface of the earth.

* * * * *

ANM OR E5 Newport, or [Revised]

Newport Municipal Airport, OR
(Lat. 44°34′49″ N, long. 124°03′28″ W.)
Newport VORTAC
(Lat. 44°34′31″ N, long. 124°03′38″ W.)

That airspace extending upward from 700-feet above the surface within a 5.5 mile radius of Newport Municipal Airport, and within 3.5 miles each side of the 005° bearing from the Newport VORTAC extending from the 5.5 mile radius to 8.7 miles north of the VORTAC, and within 2 miles each side of the Newport VORTAC 044° radial extending from the 5.5 mile radius to 11.4 miles northeast of the VORTAC, and within 3 miles each side of the Newport VORTAC 341° radial extending from the 5.5 mile radius to 7 miles northwest of the VORTAC; and that airspace extending upward from 1,200-feet above the surface, bounded by a line beginning at lat. 44°35′27″ N., long. 124°17′15″ W.; to lat. 44°47′56″ N., long. 124°21′20″ W.; to lat. 44°51′32″ N., long. 124°21′30″ W.; to lat. 44°54′10″ N., long. 124°19′50″ W.; to lat. 45°05′37″ N., long. 124°18′01″ W.; to lat. 45°05′37″ N., long. 123°52′30″ W.; to lat. 44°31′59″ N., long. 123°58′04″ W., to lat. 44°18′20″ N.; long. 124°11′55″ W., to lat. 44°21′58″ N.; long. 124°20′30″ W., to lat. 44°25′22″ N.; long. 124°14′40″ W.; thence to point of origin; excluding that airspace within Federal Airways, the Tillamook and Corvallis, OR, Class E airspace area.

* * * * *

Issued in Seattle, Washington, on February 27, 2002.

Charles E. Davis,

Acting Assistant Manager, Air Traffic Division, Northwest Mountain Region.

[FR Doc. 02–5813 Filed 3–8–02; 8:45 am]

BILLING CODE 4910–13–M

DEPARTMENT OF DEFENSE

Department of the Army, Corps of Engineers

33 CFR Part 334

Department of Air Force, Wisconsin Air National Guard Danger Zone, R–6903, Lake Michigan, Sheboygan County, Wisconsin

AGENCY: United States Army Corps of Engineers, DoD.

ACTION: Notice of proposed rulemaking and request for comments.

SUMMARY: The U.S. Corps of Engineers is proposing regulations to reestablish a Danger Zone in Lake Michigan offshore from Sheboygan County, Wisconsin. These regulations will enable the Wisconsin Air National Guard (WiANG) to ensure the safety of fishermen and mariners in the vicinity of a live fire exercise area, which is located off the Wisconsin shoreline in Lake Michigan from Manitowoc to Port Washington, Wisconsin. The regulations are necessary to protect fishermen and mariners from potentially hazardous conditions which may exist as a result of WiANG's use of the area.

DATES: Written comments must be submitted on or before April 10, 2002.

ADDRESSES: U. S Army Corps of Engineers, ATTN: CECW–OR, 441 G Street, NW., Washington, DC 20314–1000.

FOR FURTHER INFORMATION CONTACT: Mr. Frank Torbett, Headquarters Regulatory Branch, Washington, D.C. at (202) 761–4618, or Mr. Howard J. Ecklund, Corps of Engineers, St. Paul District, Regulatory Branch, at (262) 547–4171.

SUPPLEMENTARY INFORMATION: Pursuant to its authorities in Section 7 of the Rivers and Harbors Act of 1917 (40 Stat. 266; 33 U.S.C. 1) and Chapter XIX, of the Army Appropriations Act of 1919 (40 Stat. 892; 33 U.S.C. 3) the Corps proposes to amend the restricted area regulations in 33 CFR part 334 by adding section 334.845 which establishes a danger zone in Lake Michigan offshore from Manitowoc and Sheboygan Counties, Wisconsin. The public currently has unrestricted access to the waters of Lake Michigan in close proximity to WiANG's exercise area. To better protect fishermen and mariners, the WiANG has requested the Corps of Engineers establish this danger zone that will enable the WiANG to continue to use this area to maintain its combat mission readiness.

Procedural Requirements

a. Review under Executive Order 12866

This proposed rule is issued with respect to a military function of the Defense Department and the provisions of Executive Order 12866 do not apply.

b. Review under the Regulatory Flexibility Act

These proposed rules have been reviewed under the Regulatory Flexibility Act (Public Law 96–354) which requires the preparation of a regulatory flexibility analysis for any regulation that will have a significant economic impact on a substantial number of small entities (i.e., small businesses and small Governments). The Corps expects that the economic impact of the reestablishment of this danger zone would have practically no impact on the public, no anticipated navigational hazard or interference with existing waterway traffic and accordingly, certifies that this proposal if adopted, will have no significant economic impact on small entities.

c. Review under the National Environmental Policy Act

An environmental assessment has been prepared for this action. We have concluded, based on the minor nature of the proposed danger zone regulations, that this action, if adopted, will not have a significant impact to the quality of the human environment, and preparation of an environmental impact statement is not required. The environmental assessment may be reviewed at the District office listed at the end of **FOR FURTHER INFORMATION CONTACT** paragraph above.

d. Unfunded Mandates Act

This proposed rule does not impose an enforceable duty among the private sector and, therefore, it is not a Federal private sector mandate and it is not subject to the requirements of either Section 202 or Section 205 of the Unfunded Mandates Act. We have also found under Section 203 of the Act, that small Governments will not be significantly and uniquely affected by this rulemaking.

List of Subjects in 33 CFR Part 334

Danger zones, Marine safety, Navigation (water), Restricted areas, Waterways.

For the reasons set out in the preamble, the Corps proposes to amend 33 CFR part 334, as follows:

PART 334—DANGER ZONE AND RESTRICTED AREA REGULATIONS

1. The authority citation for 33 CFR part 334 continues to read as follows:

Authority: 40 Stat. 266 (33 U.S.C. 1) and 40 Stat. 892 (33 U.S.C. 3).

2. Section 334.845 would be added to read as follows:

§ 334.845 Wisconsin Air National Guard, Volk Field military exercise area located in Lake Michigan offshore from Manitowoc and Sheboygan Counties; Danger Zone.

(a) *The area.* The waters within an area beginning at a point at latitude 43°19′00″ N., longitude 87°41′00″ W.; to latitude 44°05′30″ N, longitude 87°29′45″ W.; to latitude 44°02′00″ N., longitude 87°02′30″ W.; to latitude 43°15′30″ N., longitude 87°14′00″ W.; thence to the point of beginning.

(b) *The regulation.* (1) All vessels entering the danger zone shall proceed across the area by the most direct route and without unnecessary delay.

(2) No vessel or craft of any size shall lie-to or anchor in the danger zone at any time other than a vessel operated by or for the U.S. Coast Guard, local, State, or Federal law enforcement agencies.

(c) *Enforcement.* The regulation in this section shall be enforced by the Commanding Officer, Volk Field, WI and/or persons or agencies as he/she may designate.

Dated: February 26, 2002.

Lawrence A. Lang,

Deputy, Operations Division, Directorate of Civil Works.

[FR Doc. 02–5655 Filed 3–8–02; 8:45 am]

BILLING CODE 3710–92–P

DEPARTMENT OF VETERANS AFFAIRS

38 CFR Part 3

RIN 2900–AK97

Time Limit for Requests for *De Novo* Review

AGENCY: Department of Veterans Affairs.

ACTION: Proposed rule.

SUMMARY: This document proposes to amend the Department of Veterans Affairs (VA) adjudication regulations concerning the time a claimant has in which to request a *de novo* review of a claim at the Veterans Service Center level after filing a Notice of Disagreement (NOD). We believe this amendment will eliminate unnecessary delays in the appeals process without adversely affecting claimants.

DATES: Comments must be received on or before May 10, 2002.

ADDRESSES: Mail or hand-deliver written comments to: Director, Office of Regulations Management (02D), Department of Veterans Affairs, 810 Vermont Ave., NW., Room 1154, Washington, DC 20420; or fax comments to (202) 273–9289; or e-mail comments to *OGCRegulations@mail.va.gov*. Comments should indicate that they are submitted in response to ''RIN 2900–AK97.'' All comments received will be available for public inspection in the Office of Regulations Management, Room 1158, between the hours of 8:00 a.m. and 4:30 p.m., Monday through Friday (except holidays).

FOR FURTHER INFORMATION CONTACT: Bill Russo, Regulations Staff, Compensation and Pension Service, Veterans Benefits Administration, Department of Veterans Affairs, 810 Vermont Avenue, NW., Washington, DC 20420, telephone (202) 273–7211.

SUPPLEMENTARY INFORMATION: Under existing statutes and regulations, a claimant who disagrees with a decision by a Veterans Service Center may appeal that decision by filing a NOD. Upon receipt of a NOD, VA must ''take such development or review action as it deems proper under the provisions of regulations not inconsistent with [title 38 U.S. Code].'' 38 U.S.C. 7105(d)(1). If this development or review does not resolve the disagreement, either by VA granting the claim or the claimant withdrawing the NOD, then VA must issue a Statement of the Case (SOC). After receiving the SOC, the claimant may continue their appeal, to the Board of Veterans' Appeals, by filing a Substantive Appeal.

Title 38 CFR 3.2600 allows claimants who have filed a timely NOD to obtain a *de novo* review by Veterans Service Center personnel. This new, optional review process was established through a final regulation published May 2, 2001 (66 FR 21871–21874). This document proposes to amend 38 CFR 3.2600 to reduce the time limit in which claimants may request a *de novo* review (a new and complete review with no deference given to the decision being reviewed) by Veterans Service Center personnel. Section 3.2600(b) currently states that unless a claimant has requested review under § 3.2600 with his or her NOD, VA will, upon receipt of the NOD, notify the claimant in writing of his or her right to a review under this section. Section 3.2600(b) further states that to obtain such a review, the claimant must request it not later than 60 days after the date VA mails the notice and that this time limit may not be extended. It also states that if the claimant fails to request *de novo* review within 60 days, VA will proceed with the traditional appellate process by issuing a SOC.

This rulemaking proposes to reduce that 60-day period to 15 days, in order to eliminate unnecessary delays in the appeals process. Under current § 3.2600(b), VA must wait up to 60 days from the date on which VA notifies a claimant of their right to a *de novo* review, before it may issue a SOC. If the claimant does not wish to have the Veterans Service Center review the claim *de novo*, this delays the appeals process by 60 days.

In VA's experience, many claimants or their representatives request *de novo* review along with their NOD. For those who do not, we believe that 15 days is enough time to decide whether to request a *de novo* review. Furthermore, by reducing the period during which VA will accept a request for *de novo* review from 60 to 15 days, we reduce the time needed to process an NOD by 45 days, no matter which option the claimant chooses.

Paperwork Reduction Act

This document contains no provisions constituting a collection of information under the Paperwork Reduction Act (44 U.S.C. 3501–3520).

Executive Order 12866

This document has been reviewed by the Office of Management and Budget under Executive Order 12866.

Regulatory Flexibility Act

The Secretary hereby certifies that the adoption of this proposed rule would not have a significant economic impact on a substantial number of small entities as they are defined in the Regulatory Flexibility Act, 5 U.S.C. 601–612. The proposed rule does not directly affect any small entities. Only VA beneficiaries are directly affected. Therefore, pursuant to 5 U.S.C. 605(b), these amendments are exempt from the initial and final regulatory flexibility analysis requirements of sections 603 and 604.

The Catalog of Federal Domestic Assistance program numbers are 64.100, 64.101, 64.104, 64.105, 64.106, 64.109, 64.110, and 64.127.

List of Subjects in 38 CFR Part 3

Administrative practice and procedure, Claims, Disability benefits, Health care, Pensions, Veterans, Vietnam.

For the reasons set forth in the preamble, 38 CFR part 3 is proposed to be amended as follows:

PART 3—ADJUDICATION

Subpart D—Universal Adjudication Rules That Apply to Benefit Claims Governed by Part 3 of This Title

1. The authority citation for part 3, subpart D continues to read as follows:

Authority: 38 U.S.C. 501(a), unless otherwise noted.

2. In § 3.2600, paragraph (b) is revised to read as follows:

§ 3.2600 Review of benefit claims decisions.

* * * * *

(b) Unless the claimant has requested review under this section with his or her Notice of Disagreement, VA will, upon receipt of the Notice of Disagreement, notify the claimant in writing of his or her right to a review under this section. To obtain such a review, the claimant must request it not later than 15 days after the date VA mails the notice. This 15-day time limit may not be extended. If the claimant fails to request review under this section not later than 15 days after the date VA mails the notice, VA will proceed with the traditional appellate process by issuing a Statement of the Case. A claimant may not have more than one review under this section of the same decision.

* * * * *

Approved: October 17, 2001.

Anthony J. Principi,

Secretary of Veterans Affairs.

[FR Doc. 02–5785 Filed 3–8–02; 8:45 am]

BILLING CODE 8320–01–P

FEDERAL COMMUNICATIONS COMMISSION

47 CFR Part 54

[CC Docket 96–45; FCC 02–41]

Federal-State Joint Board on Universal Service

AGENCY: Federal Communications Commission

ACTION: Notice of proposed rulemaking.

SUMMARY: In this document, the Commission seeks comment on issues from the *Ninth Report and Order* remanded by the United States Court of Appeals for the Tenth Circuit. Specifically, the court remanded the *Ninth Report and Order*, to the Commission to ''establish an adequate legal and factual basis for the Ninth Order and, if necessary, to reconsider the operative mechanism promulgated in that Order.'' The Commission seeks

comment on issues remanded by the court.

DATES: Comments are due April 10, 2002. Reply comments are due April 25, 2002.

FOR FURTHER INFORMATION CONTACT: Katie King at (202) 418–7491 or Jennifer Schneider at (202) 418–0425 in the Accounting Policy Division, Common Carrier Bureau.

SUPPLEMENTARY INFORMATION: This is a summary of the Commission's *Notice of Proposed Rulemaking* in CC Docket No. 96–45 released on February 15, 2002 (NPRM). The NPRM is related to an Order that was released as part of the same document. The full text of this document is available for public inspection during regular business hours in the FCC Reference Center, Room CY–A257, 445 12th Street, SW, Washington, DC, 20554.

I. Introduction

1. In this NPRM, the Commission seeks comment on the issues from the *Ninth Report and Order,* 64 FR 67416, December 1, 1999, remanded by the United States Court of Appeals for the Tenth Circuit. *The Ninth Report and Order* established a federal high-cost universal service support mechanism for non-rural carriers based on forward-looking economic costs. The court remanded the *Ninth Report and Order* to the Commission for further consideration and explanation of its decision. Specifically, the court remanded the *Ninth Report and Order* to the Commission to ''establish an adequate legal and factual basis for the Ninth Order and, if necessary, to reconsider the operative mechanism promulgated in that Order.'' In particular, the court concluded that the Commission did not (1) define adequately the key statutory terms ''reasonably comparable'' and ''sufficient'; (2) adequately explain setting the funding benchmark at 135 percent of the national average; (3) provide inducements for state universal service mechanisms; or (4) explain how this funding mechanism will interact with other universal service programs. The Commission seeks comment on the first three issues and refers the record collected in this proceeding to the Federal-State Joint Board on Universal Service (Joint Board) for a recommended decision in the Order, released with the NPRM.

II. Issues for Comment

2. The Commission seeks comment on a number of issues that will enable the Commission to better explain or modify the forward-looking high-cost universal service support mechanism implemented in the *Ninth Report and Order* consistent with the court's decision. Specifically, the Commission seeks comment on: (1) How the Commission should define certain key statutory terms; (2) whether, in light of the interpretation of those key statutory terms, the Commission can and should maintain the previously established benchmark or, in the alternative, should adopt a new benchmark or benchmarks; and (3) how the Commission should induce states to implement state universal service policies.

A. Definitions of ''Reasonably Comparable'' and ''Sufficient''

3. The Commission seeks comment on how it should define reasonably comparable for the purpose of achieving reasonable comparability of rates. Section 254 of the Communications Act of 1934, as amended (Act), suggests that rates in rural, insular and high cost areas should be compared to rates in urban areas to determine reasonable comparability. The Commission makes a two step inquiry. First, when determining whether rates are reasonably comparable, the Commission seeks comment on what should be compared. For example, such a comparison could be: ''urban'' rates compared to all other rates, ''rural'' rates compared to all other rates, or specifically defined urban and rural rates compared to each other. The Commission seeks comment on appropriate definitions of urban and rural. If commenters suggest that urban and/or rural should be defined by geographical areas, the Commission requests comment on the particular breakdown of such areas. For example, urban and rural could be defined in terms of population density. Urban and rural also could be defined by number of lines per wire center. If the line count per wire center is used, would small wire centers in large cities be defined as rural? Is it possible to adequately define reasonable comparability without adopting a definition for urban and rural? Second, the Commission seeks comment on what a fair range of rates would be to determine whether rates are reasonably comparable. The court suggested that rates differing 70 to 80 percent would not be within a fair range of rates that could be considered reasonably comparable. In this regard, the Commission notes that costs in rural areas may be one hundred times greater than costs in urban areas. Taking into account such cost differences, what is a reasonable range of rates? What other factors should be considered when determining reasonable comparability of rates? The Commission seeks empirical evidence of the range of rates in rural and urban areas based on the definition of those terms provided by commenters.

4. The Commission also seeks comment on what it means for federal support for universal service to be ''sufficient.'' Specifically, if the Commission determines that high-cost support results in rural rates that are reasonably comparable to urban rates, is that level of support sufficient under section 254 of the Act, or should the Commission take a broader examination of sufficiency? In establishing the support mechanism, the Commission attempted to balance the goal of ensuring that consumers in high-cost areas have affordable access to quality service, against the goal of ensuring that the fund is no larger than necessary to minimize the burdens on the carriers that contribute. Because the Commission must weigh several principles in determining the sufficiency of its support, the Commission seeks comment on whether it should give more weight to the principle of reasonable comparability of rates, or should the Commission continue to give weight equally to other principles listed in section 254(b) of the Act. In addition, assuming that states will implement mechanisms to support universal service, as suggested by the court and described, the Commission seeks comment on whether sufficiency should be determined by considering federal support only, or state support as well.

B. Benchmark Issues

5. The Commission seeks comment on whether it should adopt a different benchmark or benchmarks or whether it should continue to use the 135 percent benchmark. If commenters suggest that the Commission should adopt a new benchmark or benchmarks, the Commission seeks comment on how it should determine the new benchmark(s). Commenters should provide both reasoned analysis and empirical data to show that their proposed benchmarks support reasonable comparability of rates and sufficient high-cost support. The Commission also notes that the high-cost loop support mechanism for rural carriers does not use a single benchmark but, rather, uses a step function. The step function has multiple benchmarks with greater percentages of support provided as costs increase. The Commission seeks comment on whether it should adopt a step function (or some formula that provides a larger percentage of support as costs increase) in the federal high-cost support

mechanism for non-rural carriers as well. Commenters should describe precisely how the step function would operate, the range and intervals of steps, and provide the empirical support and analysis for how such a function would support reasonable comparability of rates and sufficiency of support. To the extent commenters advocate that the Commission should retain the 135 percent benchmark, commenters should provide both reasoned analysis and empirical data to show that the 135 percent benchmark supports reasonable comparability of rates and sufficiency of support. In this regard, the Commission notes that the 135 percent benchmark is consistent with an average of the benchmarks used in the high-cost loop support mechanism, which previously provided support to all carriers (and currently provides support to rural carriers). The Commission seeks comment on whether an average of benchmarks is appropriate for the non-rural high-cost mechanism.

6. The Commission also seeks comment on whether it should continue to use a benchmark based on nationwide average cost and compare it to statewide average costs. Although the court rejected Qwest's argument that the use of statewide and national averages is necessarily inconsistent with section 254, the court suggested that such a comparison would not be consistent with the statutory comparison of urban and rural rates without evidence that the benchmark actually produced comparable rates. If the Commission continues to use nationwide and statewide averages, how should the Commission measure reasonable comparability when rural costs are included in the nationwide average? In the alternative, should the Commission use a benchmark or benchmarks based on urban-only costs? Will definitions of ''urban'' and ''rural'' be required to determine an urban-only benchmark? To the extent the Commission decides to implement a benchmark based only on urban and/or rural costs, should this definition be the same as discussed above in section II.A.? The Commission also seeks comment on how the terms ''urban'' and ''rural'' should be defined—*e.g.,* by wire centers of a certain size, by certain density zones, urban versus non-urbanized areas or some other criterion. Commenters should provide empirical support and analysis showing how their proposed benchmark or benchmarks result in reasonably comparable urban and rural rates and define precisely the statutory terms, urban, rural, and reasonably comparable in their proposed methodology.

C. State Inducements

1. The Commission seeks comment on how it should induce states to implement mechanisms to support universal service. Specifically, the Commission seeks comment on whether it should: (1) implement a state share requirement, similar to that of the *Seventh Report and Order,* 64 FR 30917, June 9, 1999; (2) condition federal support on some form of state action; (3) enter into a binding cooperative agreement with states as suggested by the court; or (4) adopt some other form of state inducement. To the extent that commenters suggest the Commission should adopt one of these options, commenters should provide specific descriptions of their proposals and recommendations for implementation. If the Commission were to condition federal support on state action, in what manner and to what extent should federal support be so conditioned? The Commission also seeks comment on what kind of state action should be required. If the Commission were to enter into binding cooperative agreements with states, what form should the agreements take? Would the Commission enter into such an agreement with individual states or with the states collectively? How would such an agreement be enforced? In addition, how would the Commission induce and enforce the inducement of states to implement universal service support mechanisms in states that do not receive federal universal service support under the non-rural high-cost mechanism?

III. Procedural Issues

A. Ex Parte Presentations

8. This is a permit but disclose rulemaking proceeding. Ex parte presentations are permitted, except during the Sunshine Agenda period, provided that they are disclosed as provided in the Commission's rules.

B. Initial Regulatory Flexibility Analysis

9. As required by the Regulatory Flexibility Act of 1980, as amended (RFA), the Commission has prepared this present Initial Regulatory Flexibility Analysis (IRFA) of the possible significant economic impact on a substantial number of small entities by the policies and rules proposed in this NPRM. Written public comments are requested on this IRFA. Comments must be identified as responses to the IRFA and must be filed by the deadlines for comments on the NPRM provided in paragraph number 21 of the item. The Commission will send a copy of the NPRM, including this IRFA, to the Chief Counsel for Advocacy of the Small Business Administration (SBA). In addition, the NPRM and IRFA (or summaries thereof) will be published in the **Federal Register**.

1. Need for, and Objectives of, the Proposed Rules

10. In the *First Report and Order,* 62 FR 32862, June 17, 1997, the Commission adopted a plan for universal service support for rural, insular, and high cost areas to replace longstanding federal subsidies to incumbent local telephone companies with explicit, competitively neutral federal universal service mechanisms. In doing so, the Commission adopted the recommendation of the Joint Board that an eligible carrier's support should be based upon the forward-looking economic cost of constructing and operating the network facilities and functions used to provide the services supported by the federal universal service mechanism. In the *Ninth Report and Order,* the Commission adopted a federal high-cost universal service support mechanism for non-rural carriers based on forward-looking economic costs. The U.S. Court of Appeals for the Tenth Circuit remanded the *Ninth Report and Order* to the Commission for further explanation of its decision.

11. In the NPRM, the Commission seeks comment on issues from the *Ninth Report and Order*, remanded by the United States Court of Appeals for the Tenth Circuit. Specifically, the Commission seeks comment on: (1) How the Commission should define the key statutory terms ''reasonably comparable'' and ''sufficient'; (2) whether, in light of the interpretation of those key statutory terms, the Commission can and should maintain the previously established benchmark or, in the alternative, should adopt a new benchmark or benchmarks; and (3) how the Commission should induce states to implement state universal service policies. The objective of the NPRM is to assemble a record, to refer the record collected in this proceeding to the Joint Board for a recommended decision, and to consider the record and Joint Board recommendations in formulating a response to the court's remand. The Commission expects that, upon receipt of a recommended decision from the Joint Board, the Commission will be able adopt an order implementing a high-cost support mechanism that will be sufficient to enable non-rural carriers' rates for service to remain affordable and

reasonably comparable in all regions of the nation.

2. Legal Basis

12. This rulemaking action is supported by sections 1–4, 201–205, 214, 218–220, 254, 303(r), 403 and 410 of the Communications Act of 1934, as amended.

3. Description and Estimate of the Number of Small Entities to Which the Notice Will Apply

13. The RFA generally defines ''small entity'' as having the same meaning as the term ''small business,'' ''small organization,'' and ''small government jurisdiction.'' In addition, the term ''small business'' has the same meaning as the term ''small business concern'' under the Small Business Act, unless the Commission has developed one or more definitions that are appropriate to its activities. Under the Small Business Act, a ''small business concern'' is one that: (1) Is independently owned and operated; (2) is not dominant in its field of operation; and (3) meets any additional criteria established by the SBA.

14. The SBA has defined a small business for Standard Industrial Classification (SIC) category 4813 (Telephone Communications Except Radiotelephone) to be a small entity when it has no more than 1,500 employees.

15. The Commission has included small incumbent local exchange carriers in this present RFA analysis. As noted above, a ''small business'' under the RFA is one that, inter alia, meets the pertinent small business size standard (*e.g.*, a telephone communications business having 1,500 or fewer employees), and ''is not dominant in its field of operation.'' The SBA's Office of Advocacy contends that, for RFA purposes, small incumbent local exchange carriers are not dominant in their field of operation because any such dominance is not ''national'' in scope. The Commission has therefore included small incumbent local exchange carriers in this RFA analysis, although the Commission emphasizes that this RFA action has no effect on Commission analyses and determinations in other, non-RFA contexts.

4. Description of Projected Reporting, Recordkeeping, and Other Compliance Requirements

16. With respect to reporting and recordkeeping, the NPRM seeks comment on issues concerning the *Ninth Report and Order*, that have been remanded by the court, as described above. Changes in recordkeeping, if any, will primarily occur in the area of benchmark issues. If the Commission upholds the mechanism adopted in the *Ninth Report & Order*, there will be no changes. If the Commission changes the current high-cost support mechanism, however, adoption of new rules or requirements may require additional recordkeeping. For example, if the Commission adopts a mechanism that compares ''urban'' and/or ''rural'' costs or rates in order to determine an appropriate benchmark, additional information from all non-rural carriers may be necessary, such as line count information for urban and rural areas.

5. Steps Taken To Minimize Significant Economic Impact on Small Entities, and Significant Alternatives Considered

17. The RFA requires an agency to describe any significant alternatives that it has considered in reaching its proposed approach, which may include the following four alternatives (among others): (1) The establishment of differing compliance or reporting requirements or timetables that take into account the resources available to small entities; (2) the clarification, consolidation, or simplification of compliance or reporting requirements under the rule for small entities; (3) the use of performance, rather than design, standards; and (4) an exemption from coverage of the rule, or any part thereof, for small entities.

18. The proposals resulting from the NPRM could have varying positive or negative impacts on telecommunications carriers, including any such small carriers. Public comments are welcomed in the NPRM that would reduce any potential impacts on small entities. Specifically, suggestions are sought on different compliance or reporting requirements that would take into account the resources of small entities. Comments are also sought on possibilities for clarification, consolidation, or simplification of compliance and reporting requirements for small entities that would be subject to the rules, and on whether waiver or forbearance from the rules for small entities would be feasible or appropriate. Comments should be supported by specific economic analysis.

19. The Commission does not believe that any final result in any area of the proposed rules under consideration will have a differential impact on small entities. With the request for comments in the NPRM, however, the commenters may present the Commission with various proposals that may have varying impacts on small entities. The Commission seeks comment on whether any proposals, if implemented, may result in an unfair burden.

6. Federal Rules That May Duplicate, Overlap, or Conflict With the Proposed Rules

20. None.

C. Comment Filing Procedures

21. The Commission invites comment on the issues and questions set forth in the Notice of Proposed Rulemaking and Initial Regulatory Flexibility Analysis contained herein. Pursuant to applicable procedures set forth in §§ 1.415 and 1.419 of the Commission's rules, interested parties may file comments on or before April 10, 2002, and reply comments on or before April 25, 2002. All filings should refer to CC Docket No. 96–45. Comments may be filed using the Commission's Electronic Comment Filing System (ECFS) or by filing paper copies.

22. Comments filed through ECFS can be sent as an electronic file via the Internet to <*http://www.fcc.gov/e-file/ecfs.html*>. Generally, only one copy of an electronic submission must be filed. In completing the transmittal screen, commenters should include their full name, Postal Service mailing address, and the applicable docket number, which in this instance is CC Docket No. 96–45. Parties may also submit an electronic comment by Internet e-mail. To receive filing instructions for e-mail comments, commenters should send an e-mail to *ecfs@fcc.gov*, and should include the following words in the body of the message: get form <your e-mail address>. A sample form and directions will be sent in reply.

23. Parties who choose to file by paper must file an original and four copies of each filing. If more than one docket or rulemaking number appears in the caption of this proceeding, commenters must submit two additional copies for each additional docket or rulemaking number. Parties who choose to file by paper are hereby notified that effective December 18, 2001, the Commission's contractor, Vistronix, Inc., will receive hand-delivered or messenger-delivered paper filings for the Commission's Secretary at a new location in downtown Washington, DC. The address is 236 Massachusetts Avenue, NE, Suite 110, Washington, DC, 20002. The filing hours at this location will be 8:00 am to 7:00 pm. All hand deliveries must be held together with rubber bands or fasteners. Any envelopes must be disposed of before entering the building. This facility is the only location where hand-delivered or messenger-delivered paper filings for the Commission's Secretary will be

accepted. Accordingly, the Commission will no longer accept these filings at 9300 East Hampton Drive, Capitol Heights, MD, 20743. Other messenger-delivered documents, including documents sent by overnight mail (other than United States Postal Service (USPS) Express Mail and Priority Mail), must be addressed to 9300 East Hampton Drive, Capitol Heights, MD, 20743. This location will be open 8:00 a.m. to 5:30 p.m. The USPS first-class mail, Express Mail, and Priority Mail should continue to be addressed to the Commission's headquarters at 445 12th Street, SW, Washington, DC, 20554. The USPS mail addressed to the Commission's headquarters actually goes to our Capitol Heights facility for screening prior to delivery at the Commission.

If you are sending this type of document or using this delivery method.	It should be addressed for delivery to * * *
Hand-delivered or messenger-delivered paper filings for the Commission's Secretary.	236 Massachusetts Avenue, NE, Suite 110, Washington, DC 20002 (8:00 am to 7:00 pm).
Other messenger-delivered documents, including documents sent by overnight mail (other than United States Postal Service Express Mail and Priority Mail).	9300 East Hampton Drive, Capitol Heights, MD 20743 (8:00 am to 5:30 pm).
United States Postal Service first-class mail, Express Mail, and Priority Mail.	445 12th Street, SW Washington, DC 20554.

All filings must be sent to the Commission's Acting Secretary: William F. Caton, Office of the Secretary, Federal Communications Commission, 445 12th Street, SW, Suite TW–A325, Washington, DC 20554.

24. Parties who choose to file by paper should also submit their comments on diskette to Sheryl Todd, Accounting Policy Division, Common Carrier Bureau, Federal Communications Commission, 445 12th Street, SW, Room 5–B540, Washington, DC 20554. Such a submission should be on a 3.5-inch diskette formatted in an IBM compatible format using Microsoft Word or compatible software. The diskette should be accompanied by a cover letter and should be submitted in ''read only'' mode. The diskette should be clearly labeled with the commenter's name, proceeding (including the docket number, in this case, CC Docket No. 96–45), type of pleading (comment or reply comment), date of submission, and the name of the electronic file on the diskette. The label should also include the following phrase ''Disk Copy—Not an Original.'' Each diskette should contain only one party's pleading, preferably in a single electronic file. In addition, commenters must send diskette copies to the Commission's copy contractor, Qualex International, Portals II, 445 12th Street, SW, Room CY–B402, Washington, DC 20554.

25. Regardless of whether parties choose to file electronically or by paper, parties should also file one copy of any documents filed in this docket with the Commission's copy contractor, Qualex International, Inc., Portals II, 445 12th Street, SW, Room CY–B402, Washington, DC 20554. Comments and reply comments will be available for public inspection during regular business hours in the FCC Reference Center, Room CY–A257, 445 12th Street, SW, Washington, DC 20554. In addition, the full text of the document is available for public inspection and copying during regular business hours at the FCC Reference Information Center, Portals II, 445 12th Street, SW, Room CY–A257, Washington, DC, 20554. The document may also be purchased from the Commission's duplicating contractor, Qualex International, Portals II, 445 12th Street, SW, Room CY–B402, Washington, DC 20554, telephone 202–863–2893, facsimile 202–863–2898, or via e-mail *qualexint@aol.com.*

26. Comments and reply comments must include a short and concise summary of the substantive arguments raised in the pleading. Comments and reply comments must also comply with section 1.49 and all other applicable sections of the Commission's rules. The Commission directs all interested parties to include the name of the filing party and the date of the filing on each page of their comments and reply comments. All parties are encouraged to utilize a table of contents, regardless of the length of their submission. The Commission also strongly encourages parties to track the organization set forth in the NPRM in order to facilitate its internal review process.

D. Further Information

27. Alternative formats (computer diskette, large print, audio recording, and Braille) are available to persons with disabilities by contacting Brian Millin at (202) 418–7426 voice, (202) 418–7365 TTY, or *bmillin@fcc.gov.* This NPRM can also be downloaded in Microsoft Word and ASCII formats at *http://www.fcc.gov/ccb/universal_service/highcost.*

IV. Ordering Clauses

28. Pursuant to sections 1–4, 201–205, 214, 218–220, 254, 303(r), 403 and 410 of the Communications Act of 1934, as amended, 47 U.S.C. 151–154, 201–205, 214, 218–220, 254, 303(r), 403 and 410, the *Notice of proposed rulemaking* is hereby Adopted.

29. The Commission's Consumer Information Bureau, Reference Information Center, *Shall send* a copy of the NPRM, including the Initial Regulatory Flexibility Analysis, to the Chief Counsel for Advocacy of the Small Business Administration.

List of Subjects in 47 CFR Part 54

Communications common carriers, Telecommunications, Telephone.

Federal Communications Commission.

William F. Caton,

Acting Secretary.

[FR Doc. 02–5676 Filed 3–8–02; 8:45 am]

BILLING CODE 6712–01–U

FEDERAL COMMUNICATIONS COMMISSION

47 CFR Part 73

[DA 02–498, MM Docket No. 02–45, RM–10374]

Digital Television Broadcast Service; Cadillac and Manistee, MI

AGENCY: Federal Communications Commission.

ACTION: Proposed rule.

SUMMARY: The Commission requests comments on a petition filed by Central Michigan University, the licensee of noncommercial station WCMV–TV, Cadillac, Michigan, and WCMW–TV, Manistee, Michigan, requesting the substitution of DTV channel *17 for

DTV channel *58 as WCMV–DT paired DTV allotment; and the substitution of DTV channel *58 for DTV channel *17 as WCMW–DT's paired DTV allotment. DTV Channel *17 can be allotted to Cadillac in compliance with the principle community coverage requirements of Section 73.625(a) at reference coordinates 44–44–53 N. and 85–04–08 W. with a power of 500 and a height above average terrain (HAAT) of 399 meters. DTV channel *58 can be allotted to Manistee in compliance with the principle community coverage requirements of Section 73.625(a) at reference coordinates 44–03–57 N. and 86–19–58 W. with a power of 200 and a height above average terrain (HAAT) of 104 meters. Since the communities of Cadillac and Manistee are located within 400 kilometers of the U.S.-Canadian border, concurrence from the Canadian government must be obtained for these allotments.

DATES: Comments must be filed on or before April 29, 2002, and reply comments on or before May 14, 2002.

ADDRESSES: Federal Communications Commission, 445 12th Street, SW., Room TW–A325, Washington, DC 20554. In addition to filing comments with the FCC, interested parties should serve the petitioner, or its counsel or consultant, as follows: Todd D. Gray, Margaret L. Miller, Dow, Lohnes & Albertson, PLLC, 1200 New Hampshire Avenue, NW., Suite 800, Washington, DC 20036–6802 (Counsel for Central Michigan University).

FOR FURTHER INFORMATION CONTACT: Pam Blumenthal, Mass Media Bureau, (202) 418–1600.

SUPPLEMENTARY INFORMATION: This is a synopsis of the Commission's Notice of Proposed Rule Making, MM Docket No. 02–45, adopted March 1, 2002, and released March 6, 2001. The full text of this document is available for public inspection and copying during regular business hours in the FCC Reference Information Center, Portals II, 445 12th Street, SW., Room CY–A257, Washington, DC 20554. This document may also be purchased from the Commission's duplicating contractor, Qualex International, Portals II, 445 12th Street, SW., Room CY–B402, Washington, DC 20554, telephone 202–863–2893, facsimile 202–863–2898, or via-e-mail *qualexint@aol.com*.

Provisions of the Regulatory Flexibility Act of 1980 do not apply to this proceeding.

Members of the public should note that from the time a Notice of Proposed Rule Making is issued until the matter is no longer subject to Commission consideration or court review, all *ex parte* contacts are prohibited in Commission proceedings, such as this one, which involve channel allotments. See 47 CFR 1.1204(b) for rules governing permissible *ex parte* contacts.

For information regarding proper filing procedures for comments, see 47 CFR 1.415 and 1.420.

List of Subjects in 47 CFR Part 73

Television, Digital television broadcasting.

For the reasons discussed in the preamble, the Federal Communications Commission proposes to amend 47 CFR part 73 as follows:

PART 73—TELEVISION BROADCAST SERVICES

1. The authority citation for part 73 continues to read as follows:

Authority: 47 U.S.C. 154, 303, 334, and 336.

§73.622 [Amended]

2. Section 73.622(b), the Table of Digital Television Allotments under Michigan is amended by removing DTV Channel *58 and adding DTV Channel *17 at Cadillac; and by removing DTV channel *17 and adding DTV channel *58 at Manistee.

Federal Communications Commission.

Barbara A. Kreisman,

Chief, Video Services Division, Mass Media Bureau.

[FR Doc. 02–5709 Filed 3–8–02; 8:45 am]

BILLING CODE 6712–01–P

FEDERAL COMMUNICATIONS COMMISSION

47 CFR Part 73

[DA 02–409; MM Docket No. 02–40; RM–10377]

Radio Broadcasting Services; Goldsboro and Smithfield, North Carolina

AGENCY: Federal Communications Commission.

ACTION: Proposed rule.

SUMMARY: This document requests comments on a petition for rule making filed on behalf of New Age Communications, Inc., licensee of Station WKIX(FM), Channel 272A, Goldsboro, North Carolina, requesting the reallotment of Channel 272A from Goldsboro to Smithfield, North Carolina, and modification of its authorization accordingly, pursuant to the provisions of Section 1.420(i) of the Commission's Rules. The coordinates for requested Channel 272A at Smithfield, North Carolina, are 35–28–21 NL and 78–19–43 WL.

Petitioner's reallotment proposal complies with the provisions of section 1.420(i) of the Commission's Rules, and therefore, the Commission will not accept competing expressions of interest in the use of Channel 272A at Smithfield, North Carolina, or require the petitioner to demonstrate the availability of an additional equivalent class channel.

DATES: Comments must be filed on or before April 8, 2002, and reply comments on or before April 23, 2002.

ADDRESSES: Secretary, Federal Communications Commission, 445 12th Street, SW., Room TW–A325, Washington, DC 20554. In addition to filing comments with the FCC, interested parties should serve the petitioner's counsel, as follows: Wade H. Hargrove, Esq. and David Kusher, Esq., Brooks, Pierce, McLendon, Humphrey & Leonard, L.L.P.; P.O. Box 1800; Raleigh, North Carolina 27602.

FOR FURTHER INFORMATION CONTACT: R. Barthen Gorman, Mass Media Bureau, (202) 418–2180.

SUPPLEMENTARY INFORMATION: This is a synopsis of the Commission's Notice of Proposed Rule Making, MM Docket No. 02–40, adopted February 13, 2002, and released

February 22, 2002. The full text of this Commission decision is available for inspection and copying during regular business hours in the FCC's Reference Information Center at Portals II, 445 12th Street, SW, CY–A257, Washington, DC, 20554. This document may also be purchased from the Commission's duplicating contractors, Qualex International, Portals II, 445 12th Street, SW, Room CY–B402, Washington, DC, 20554, telephone 202–863–2893, facsimile 202–863–2898, or via e-mail *qualexint@aol.com*.

The provisions of the Regulatory Flexibility Act of 1980 do not apply to this proceeding.

Members of the public should note that from the time a Notice of Proposed Rule Making is issued until the matter is no longer subject to Commission consideration or court review, all *ex parte* contacts are prohibited in Commission proceedings, such as this one, which involve channel allotments. *See* 47 CFR 1.1204(b) for rules governing permissible *ex parte* contacts.

For information regarding proper filing procedures for comments, *See* 47 CFR 1.415 and 1.420.

List of Subjects in 47 CFR Part 73

Radio broadcasting.

For the reasons discussed in the preamble, the Federal Communications Commission proposes to amend 47 CFR part 73 as follows:

PART 73—[RADIO BROADCAST SERVICES]

1.The authority citation for Part 73 continues to read as follows:

Authority: 47 U.S.C. 154, 303, 334, and 336.

§ 73.202 [Amended]

1. Section 73.202(b), the Table of FM Allotments under North Carolina, is amended by adding Smithfield, Channel 272A, and removing Channel 272A at Goldsboro.

Federal Communications Commission.

John A. Karousos,

Chief, Allocations Branch, Policy and Rules Division, Mass Media Bureau.

[FR Doc. 02–5710 Filed 3–8–02; 8:45 am]

BILLING CODE 6712–01–P

DEPARTMENT OF TRANSPORTATION

National Highway Traffic Safety Administration

49 CFR Part 538

[Docket No.: NHTSA–2001–10774; Notice 2]

RIN 2127–AI41

Automotive Fuel Economy Manufacturing Incentives for Alternative Fuel Vehicles

AGENCY: National Highway Traffic Safety Administration (NHTSA), Department of Transportation (DOT).

ACTION: Notice of proposed rulemaking (NPRM).

SUMMARY: To provide an incentive for the production of vehicles that can operate on certain alternative fuels as well as on regular petroleum fuels, Congress established a special procedure for calculating the fuel economy of those vehicles for the purpose of determining compliance with the Corporate Average Fuel Economy standards. This procedure increases the fuel economy attributed to such ''dual-fueled'' vehicles, thus facilitating compliance with those standards. By statute, the incentive is available through the end of the 2004 model year and may be extended by up to four additional years through rulemaking.

This document proposes to extend the availability of the incentive by four years, i.e., through the end of the 2008 model year.

DATES: Comments must be received on or before April 10, 2002.

ADDRESSES: You may submit your comments in writing to: Docket Section, National Highway Traffic Safety Administration, 400 Seventh Street, SW., Washington, DC 20590. Alternatively, you may submit your comments electronically by logging onto the Docket Management System (DMS) Website at *http://dms.dot.gov.* Click on ''Help & Information'' or ''Help/Info'' to view instructions for filing your comments electronically. Regardless of how you submit your comments, you should mention the docket number of this document. You can find the number at the beginning of this document. Docket hours are 9 a.m. to 5 p.m. Monday through Friday.

FOR FURTHER INFORMATION CONTACT: The following persons at the National Highway Traffic Safety Administration, 400 Seventh Street, SW., Washington, DC 20590:

For non-legal issues: Mr. Kenneth Katz, Consumer Programs Division, Office of Planning and Consumer Programs, NPS–32, Room 5320, telephone (202) 366–4936, facsimile (202) 493–2290.

For legal issues: Otto Matheke, Office of the Chief Counsel, NCC–20, Room 5219, telephone (202) 366–5263, facsimile (202) 366–3820.

SUPPLEMENTARY INFORMATION:

Table of Contents

I. Summary of Agency Proposal
II. Background
A. Statutory Background
B. Report To Congress
C. Other Developments
D. U.S. Dependence on Imported Petroleum
E. Availability and Use of Alternative Fuels
III. Agency Proposal
IV. Benefits and Costs
V. Rulemaking Notices and Analyses
A. Executive Order 12866 and DOT Regulatory Policies and Procedures
B. Regulatory Flexibility Act
C. National Environmental Policy Act
D. Executive Order 13132 (Federalism)
E. Civil Justice Reform
F. Paperwork Reduction Act
G. National Technology Transfer and Advancement Act
H. Unfunded Mandates Reform Act
I. Plain Language
J. Regulation Identifier Number (RIN)
VI. Preparation and Submission of Comments

I. Summary of Agency Proposal

Congress created the Corporate Average Fuel Economy (CAFE) program when it enacted the Energy Policy and Conservation Act of 1975 (Pub. L. 94–163; Dec. 22, 1975). The CAFE statutory provisions, now codified in Chapter 329 of Title 49 of the United States Code (49 U.S.C. 32901 *et seq.*), mandate fuel economy standards that must be met by vehicle manufacturers. These standards apply separately to each manufacturer's annual fleet of passenger cars and to its annual fleet of light trucks under 8,500 lbs. gross vehicle weight rating, instead of applying to individual vehicles. Each manufacturer's average fuel economy is determined by the Environmental Protection Agency in accordance with procedures set forth in 49 U.S.C. 32904. Those procedures provide for determining the fuel economy of a manufacturer's model types produced in a particular model year and calculating a weighted fuel economy average for the manufacturer.

Congress amended the CAFE provisions when it enacted the Alternative Motor Fuels Act of 1988 (''AMFA'') (Pub. L. 100–94; October 14, 1988). The purposes of AMFA were to encourage the development and use of methanol, ethanol and natural gas as transportation fuels and to promote the production of alternative fuel vehicles (AFVs). For the latter purpose, AMFA provides special procedures for calculating the fuel economy of ''dedicated'' alternative fuel vehicles and ''dual-fueled'' vehicles that meet specified eligibility criteria. ''Dedicated vehicles'' are cars or light trucks designed to operate exclusively either on natural gas or on a methanol or ethanol fuel mixture composed of at least 85 percent of either substance. ''Dual-fueled vehicles'' have the capability to operate on conventional petroleum and the capability to operate on an alternative fuel. Most dual-fueled vehicles produced to date are capable of operating on E85 (a blend of 85 percent ethanol and 15 percent gasoline) and either gasoline or diesel. The special calculation procedures used in determining the fuel economy of alternative fuel vehicles substantially increase the fuel economy ratings of these vehicles.

In creating the incentive program for dual-fueled vehicles, Congress expressly limited both the extent to which a manufacturer can avail itself of the incentive in any model year as well as the duration of the incentives.[1] For the 1993–2004 model years, the maximum increase in CAFE available to a manufacturer for producing qualifying dual-fueled vehicles is 1.2 miles per gallon.

AMFA provides that by December 31, 2001, the agency either extend the program beyond the 2004 model year or

[1] Congress did not apply either of these limitations to the incentive program for dedicated vehicles.

issue a notice of termination ending it at the close of that model year. An extension of up to four model years is authorized. If the program were extended, the maximum increase in CAFE attributed to the incentive would be limited to .9 miles per gallon in any of those model years.

AMFA further directs that NHTSA evaluate the dual-fuel incentive program and provide a report to Congress analyzing the success of the incentive program and preliminary conclusion regarding extension of the program beyond the 2004 model year.

NHTSA is proposing that the dual-fuel incentive program be extended by four years, i.e., through the end of the 2008 model year. We are proposing this extension for several reasons. Domestic energy security is more important than ever. The vehicles affected by the program operate on ethanol, a domestic fuel. To the extent that domestic fuels can be used, we can decrease our reliance on foreign petroleum. We recognize the potential value to domestic energy security of having a fleet of vehicles that can be operated on non-petroleum fuels. This value would be realized in times of petroleum shortages. We are mindful that the vehicle manufacturers would not likely maintain their current level of efforts to produce alternative fuel vehicles in the absence of the incentive program. As we recommend in our report to Congress that steps be taken to enhance the infrastructure, we want to maintain the program while efforts are made to identify and implement those steps. The proposed four-year extension would give Congress, other executive branch agencies, regional authorities, and the private sector ample time to identify, adopt and implement such steps. NHTSA is also concerned that an extension of less four years would not allow sufficient time to begin to realize the potential benefits from the operation of the dual fuel incentive program. For a variety of reasons, significant numbers of dual fuel capable vehicles have only recently begun to appear in the marketplace. It is, therefore, not yet clear whether the continuing presence of these vehicles, their ability to use alternative fuels, programs intended to increase the use and production of alternative fuels and other conditions will stimulate the expansion of the alternative fuel infrastructure as envisioned by Congress in creating the dual fuel incentive program. The development of a viable alternative fuel infrastructure, particularly one based on domestically produced ethanol fuel, would reduce the nation's dependence on imported oil. The realization of this significant benefit, in our view, may require nothing less than a full four-year extension of the incentive program.

In proposing this extension, we recognize that the incentive program, as it is now operating, potentially may be having some negative energy effects. By upwardly adjusting the calculated level of fuel efficiency of dual-fueled vehicles, the incentive program allows manufacturers to build less fuel efficient conventionally fueled vehicles without paying CAFE penalties. If manufacturers do so, have no other means of meeting CAFE standards in the absence of the incentive, and choose not to allow their CAFE to fall to the level where they would have to pay penalties, the incentive program provides a means for producing a less fuel efficient fleet. Under the foregoing conditions, if dual-fueled vehicles are operated almost exclusively on petroleum, the net impact is, in effect, to reduce the CAFE levels that are achieved by manufacturers and increase the consumption of petroleum. However, in order to conclude that the incentive program has a negative energy impact, one must make certain assumptions about the various actions that manufacturers may take in meeting CAFE, including the notion that manufacturers would not, in the face of increasing demand for less efficient vehicles, have simply chosen to pay CAFE penalties in order to meet that demand. As NHTSA has, until recently, been constrained from collecting data regarding manufacturer capabilities and any analysis of manufacturer capabilities and choices is necessarily complex, the agency cannot state with any certainty that the incentive program has, or will, have negative energy effects.

Any increased costs resulting from the operation of the incentive program must, if the program is to be extended, be offset by actual or potential benefits. As noted above, one such benefit is having a fleet of vehicles that can operate on alternative fuels. Use of alternative fuels by these vehicles reduces dependence on foreign oil and would help to lessen demand for conventional fuels, thereby helping to keep fuel prices low. If sufficient numbers of dual fuel vehicles exist and continue to spur development of an alternative fuel infrastructure, the nation would, to a degree, be insulated from the impacts of ''oil shocks'' resulting from sudden disruptions to the petroleum supply.

II. Background

A. Statutory Background

In 1988, Congress enacted the Alternative Motor Fuels Act (AMFA). Section 6 of that Act amended the fuel economy provisions of the Motor Vehicle Information and Cost Savings Act by adding a new section, section 513, providing incentives for the manufacture of vehicles designed to operate on alternative fuels, including dual-fueled vehicles. The section provides that incentive by establishing special procedures for calculating the fuel economy of those vehicles. These special procedures result in alternative fuel vehicles being assigned a higher fuel economy value for CAFE compliance purposes than they would have under the procedures used for calculating the fuel economy of other vehicles. Manufacturers choosing to build such vehicles can use the fuel economy of their alternative fuel vehicles to raise the calculated level of their CAFE.

Dual-fueled vehicles generally are vehicles that can operate either on alternative fuel and either gasoline or diesel fuel, or on natural gas and either gasoline or diesel fuel. Section 513(h) specifically defined a ''dual energy automobile'' as one that meets a minimum driving range and:

> (i) Which is capable of operating on alcohol and on gasoline or diesel fuel;
>
> (ii) Which provides equal or superior energy efficiency, as calculated for the applicable model year during fuel economy testing for the Federal Government, while operating on alcohol as it does while operating on gasoline or diesel fuel; [and]
>
> (iii) Which * * * provides equal or superior energy efficiency, as calculated for the applicable model year during fuel economy testing for the Federal Government, while operating on a mixture of alcohol and gasoline or diesel fuel containing exactly 50 percent gasoline or diesel fuel as it does while operating on gasoline or diesel fuel.

A ''natural gas dual energy'' automobile was defined as a vehicle that met a specified minimum driving range, and:

> (i) Which is capable of operating on natural gas and on gasoline or diesel fuel; [and]
>
> (ii) Which provides equal or superior energy efficiency, as calculated for the applicable model year during fuel economy testing for the Federal Government, while operating on natural gas as it does while operating on gasoline or diesel fuel.

The Energy and Policy Act of 1992 added new provisions to section 513. The definition of ''alternative fuel'' was expanded to include liquefied petroleum gas, hydrogen, liquid fuels derived from coal and biological materials, electricity and any other fuel

that the Secretary of Transportation determines to be substantially non-petroleum based and have environmental and energy security benefits. The 1992 Act also revised terminology by replacing ''dual energy'' and ''natural gas dual energy'' with ''alternative fueled vehicles'' in order to reflect the expanded list of fuels.

The 1988 AMFA amendments established the eligibility criteria and procedures for calculation of the incentive benefits. Manufacturers of alternative fuel vehicles that met the minimum driving range and energy efficiency criteria could use a special procedure for calculating the fuel economy of these vehicles for the 1993 through 2004 model years. The special calculation procedure substantially raises the fuel economy of the vehicle. For instance, a dedicated alternative fuel vehicle achieving 15 miles per gallon while operating on alcohol would, based on the special calculation procedures, be deemed to have a fuel economy of 100 miles per gallon.[2]

The special calculation procedure for alternative fuel dual-fueled vehicles is based on the assumption that those vehicles will operate 50 percent of the time on the alternative fuel and 50 percent of the time on conventional fuel, resulting in a fuel economy figure that is based on a harmonic average of alternative and conventional fuel. For example, an alternative dual-fueled model that achieves 15 miles per gallon operating on an alcohol fuel and 25 mpg on the conventional fuel would, based on the special calculation procedure, be calculated to have a CAFE fuel economy of 40 miles per gallon.[3]

The CAFE values for a natural gas alternative fuel vehicle are calculated in a similar fashion. For the purposes of this calculation, the fuel economy is equal to the weighted average of the vehicle fuel economy while operating on natural gas and the vehicle fuel economy while operating on either gasoline or diesel fuel. Section 32905(c) specifies the energy equivalency of 100 cubic feet of natural gas to be equal to 0.823 gallons of gasoline, with the gallon equivalent of natural gas to be considered to have a fuel content equal to 0.15 gallons of fuel.

Since alternative fuel vehicles will, for CAFE purposes, have a higher calculated fuel economy rating than their conventionally fueled counterparts, production of alternative fuel vehicles allows manufacturers to boost their CAFE ratings. The opportunity for raising a manufacturer's calculated CAFE through this incentive program is limited to 1.2 miles per gallon per model year for the 1993 through 2004 model years. If the program is extended beyond the 2004 model year, the CAFE increase is limited to 0.9 miles per gallon per model year.

Sections 32905(b) and (d) specify that the dual-fuel incentives apply to vehicles produced in the 1993 through 2004 model years. The incentives may, however, be extended. Section 32905(f) provides that the Secretary of Transportation shall, no later than December 31, 2001, either complete rulemaking to extend the incentive program for up to four more consecutive model years or issue a notice of termination ending it.

In anticipation of the decision regarding extension, section 32905(g) directed the Secretary, in consultation with the Secretary of Energy and the Administrator of the Environmental Protection Agency, to submit a report to Congress containing the results of a study of this alternative fuel vehicle mileage credit incentive policy and providing preliminary conclusions whether the program should be extended for up to an additional four (4) model years. In preparing this study and report, the Secretary is required to consider the following factors:

(i) [T]he availability to the public of alternative fueled automobiles, and alternative fuels;

(ii) Energy conservation and energy security;

(iii) Environmental considerations; and

(iv) Other relevant factors.

B. Report to Congress

In response to the directive in section 32905(g), NHTSA is submitting a report to Congress simultaneously with the issuance of this notice. This report, which contains the agency's findings regarding the impacts and effectiveness of the dual-fuel incentive program, was preceded by a request for comments that the agency published in the **Federal Register** on May 9, 2000 (65 FR 26805) (Docket No. NHTSA 2000–7087). The request for comments asked a number of questions regarding the impact of the incentive program on the production and development of dual-fueled vehicles, the costs of producing these vehicles, vehicle performance and reliability and the efforts made to market the vehicles. Other questions asked for information on future product plans for the production of dual-fueled vehicles, the impact that the incentives have had on the availability of alternative fuels, consumer awareness of alternative fuels, obstacles to alternative fuel use, potential modifications to the incentive program and whether the incentive program should be extended or discontinued.

The agency received comments from three automobile manufacturers—General Motors (GM), Ford Motor Company (Ford) and DaimlerChrysler (DC); five associations—Alliance of Automobile Manufacturers (Alliance), Renewable Fuels Association (RFA), National Ethanol Vehicle Coalition (NEVC), Clean Fuels Development Coalition (CFDC), and Ethanol Producers and Consumers (EPAC); one state agency—the Missouri Department of Natural Resources Energy Center (DNREC); the governors of New Mexico, Missouri, Kansas, and Wisconsin; Senators J. Robert Kerrey, Tom Daschle, Wayne Allard, Evan Bayh, John Ashcroft, Carl Levin, Charles E. Grassley, Christopher S. Bond, and Chuck Hagel; the Congressional Auto Caucus; and joint comments from the American Council for an Energy-Efficient Economy (ACEEE), Center for Auto Safety (CAS), the Sierra Club, and the U.S. Public Interest Research Group (USPIRG).

With the exception of the joint ACEEE—CAS—Sierra Club—USPIRG letter, all of the commenters voiced strong support for continuation of the incentive program from the end of the 2004 model year to the end of the 2008 model year. The supporting commenters unanimously indicated that the incentive program was primarily responsible for the development and production of alternative fuel vehicles in high volumes and was also responsible for the development of the existing refueling infrastructure. The comments also reflected a consensus that availability and price of alternative fuels continued to be the most significant obstacle to their use. Two commenters, DNREC and Governor Gary E. Johnson of New Mexico, indicated that extension of the incentive program is desirable for government entities that are required to purchase and use alternative fuel vehicles. DNREC and Governor Johnson both expressed concern that termination of the

[2] The fuel economy of dedicated vehicles is derived by computing the weighted average of fuel economy while operating on gasoline or diesel fuel and when operating on alternative fuel after dividing the alternative fuel economy by a factor of 0.15. In the example cited above, the equation is as follows: FE=(1/0.15)(15)=100.

[3] The fuel economy for an alternative dual-fueled model is calculated by dividing 1.0 by the sum of 0.5 divided by the fuel economy as measured on the conventional fuel and 0.5 divided by the fuel economy as measured on the alternative fuel, using the 0.15 volumetric conversion factor. For example, an alternative dual-fueled model that achieves 15 miles per gallon operating on an alcohol fuel and 25 mpg on the conventional fuel would have its CAFE fuel economy calculated as follows: 1/((0.5/25)+(0.5/100))=40 miles per gallon.

incentive program could impact the price and availability of alternative fuel vehicles and of the fuels that these vehicles use.

The joint ACEEE—CAS—Sierra Club—USPIRG letter opposed any extension of the incentive program. These commenters indicated that the incentive program had not resulted in any expansion of alternative fuel infrastructure. In their view, the primary impact of the incentive program was to allow manufacturers to produce less fuel-efficient vehicles. Based on this assessment, the signatories to the letter indicated that the incentive program increased petroleum consumption and increased emissions. They further urged that the incentive program be terminated unless availability of the incentive could actually be linked to alternative fuel consumption.

Ford, GM, DC, and the Alliance all indicated that the existence of the incentive program had a major influence on decisions by some vehicle manufacturers to produce dual-fueled vehicles in high volumes. Ford and DC indicated that they offered dual-fueled vehicles at no additional cost to consumers, while GM indicated that pricing was subject to a large number of factors. All three of these manufacturers indicated that present technology allowed production of reliable and usable dual-fueled vehicles. However, DC noted that alcohol fuels presented problems with starting in low temperatures. GM observed that early alcohol fuels presented corrosion problems. RFA indicated its belief that performance of dual-fueled vehicles operating on alternative fuels could be improved by tuning the engine management system to use these fuels more efficiently. The Alliance and each manufacturer also indicated that continued production of alternative fuel vehicles would be a part of their efforts to meet the CAFE standards and that such production would be adversely affected by termination of the incentive program.

Following consideration of the comments and other data, NHTSA issued its report. The agency's report indicates that the dual-fuel incentive program has had a positive impact on the production and availability of dual-fueled vehicles. However, the increased availability of these vehicles has not stimulated any meaningful growth in the availability and use of the alternative fuels used in dual-fueled vehicles. Few dual-fueled vehicles are being operated on alternative fuels. Since the incentive program rewards manufacturers for producing qualifying vehicles through an upward adjustment of their fleet fuel economy, the primary effect of the program, if manufacturers produced less fuel efficient vehicles only because the incentive program allowed them to do so, has been to increase petroleum consumption without producing a corresponding increase in the availability or use of alternative fuels (Report to Congress: Effects of the Alternative Motor Fuels Act CAFE Incentives Policy, Executive Summary (hereinafter cited as Report)).

The report finds that, by the end of the 2000 model year, the population of dual-fueled alternative fuel vehicles had increased to over 1.2 million vehicles. This growth, including 115,000 passenger cars and 1,077,000 light trucks using E85 ethanol fuel, occurred in less than five years (Report, Sec. III). By 2000, close to 8 percent of all new light trucks were dual-fueled vehicles as compared to virtually no dual-fueled light trucks two years before. About 1.4 percent of passenger cars produced in the 2000 model year were dual-fueled vehicles (compared to .025 percent in 1993) (Report, Sec. III). As the number of dual-fueled vehicles increased, the manufacturers building these vehicles grew closer to gaining the maximum CAFE increase permitted under the incentive program. For the 2000 model year, both Ford and DaimlerChrysler approached the 0.9-mpg maximum benefit level that would be allowed if the dual-fueled vehicle CAFE credit provision were extended. Similarly, GM increased its production of dual-fueled vehicles in order to benefit from the incentive program (Report, Executive Summary).

The agency's report finds that the increased production of dual-fueled vehicles had stimulated some growth in the use and availability of alternative fuels. NHTSA found that alternative fuel use in alternative fuel vehicles in the U.S. has been rising over the past decade. In 1992, a total of 230 million gasoline gallon equivalents of alternative fuel were used in alternative fuel vehicles; for 2000, that number is projected to rise to 368 million gasoline gallon equivalents, or an increase of roughly 6 percent per year. In comparison, the highway use of gasoline and diesel increased roughly 2 percent per year. However, alternative fuel use only accounts for 0.23 percent of total highway fuel use.

One factor limiting greater expansion of alternative fuel use is the availability of alternative fuels. As of May 2001, there were 5,236 alternative fuel refueling sites, with sites in all 50 states (Report, Sec. IV). Of the existing alternative fuel refueling stations, the vast majority offered liquefied petroleum gas (LPG). Natural gas refueling sites—1,217 compressed natural gas (CNG) and 44 liquefied natural gas (LNG)—had increased from 1,065 CNG refueling sites in 1995. The number of ethanol refueling sites, which provide the E85 fuel used in most dual fuel vehicles, had grown to 121 from 37 in the five years from 1995–2001. In the same period, the number of methanol (M85) refueling stations dropped from 105 to 37 as the number of M85 flexible-fuel vehicles decreased. (Report, Sec. IV).

Our report indicates that despite the fact that the incentive program had led to sales of more than one million ethanol flexible-fuel vehicles through the 2000 model year, the small number of E85 stations and the limited amount of E85 produced strongly suggest that these vehicles were being operated almost exclusively on gasoline.

The report also notes that conducting an assessment of the energy and environmental impacts of the incentive program is complicated by uncertainty about the behavior and capabilities of vehicle manufacturers. While the use of alternative fuels can reduce petroleum consumption and greenhouse gas emissions, the energy consumption and environmental impacts cannot be determined with any reasonable amount of certainty because it is difficult to determine what manufacturers would have done in the absence of the credit incentive.

In an effort to evaluate the effects of the incentive program up to the year 2000, the Environmental Protection Agency (EPA), performed an analysis comparing a baseline case in which no incentive program existed with a case where the incentive program was in place. In the incentive program case, it was assumed that one percent of the fuel used by dual-fueled vehicles during the years from 1996 to 2000 was an alternative fuel. The model also assumed that the enhanced fuel efficiency of dual-fueled vehicles resulting from application of the CAFE incentive allowed manufacturers to produce fewer fuel efficient conventional vehicles and still meet the CAFE standards and avoid civil penalties. Estimates were made of both conventional and alternative fuel use, total motor fuel consumption, and greenhouse gas emissions. These estimates were compared to the baseline analysis, in which the absence of an incentive program or consumer demand for lower mpg vehicles compelled manufacturers to make more fuel-efficient conventional vehicles. A comparison of the two models indicated that when dual-fueled vehicles are only

operated on alternative fuel one percent of the time, the incentive program increases the consumption of petroleum in two ways. First, dual-fueled vehicles operating on petroleum consume petroleum themselves. Second, the production of the dual-fueled vehicles allows manufacturers to build less efficient petroleum fueled vehicles than they would without the incentive program. Through 2000, the CAFE incentives policy was estimated to have resulted in an increase in alternative fuel use (almost all E85) and a slight increase in gasoline consumption (about 1 percent)(Report Sec. V).

The analysis also attempted to predict the effect of an extension of the incentive program on the environment and energy consumption. The effects of extending the CAFE credit to 2008 under four basic scenarios were evaluated under the assumption that manufacturers would continue to be constrained by CAFE and choose not to build less efficient vehicles and pay CAFE penalties in response to consumer demand. Two different production rates for flexible-fuel vehicles were considered: One based on a maximum benefit of 0.9 mpg and, due to a then pending legislative proposal to amend the existing limit, one based on 1.2 mpg. Two different rates of E85 fuel consumption were then considered under the aforementioned two production rates (one based on the current rate of about 1 percent and one based on a steady increase in use from the current 1 percent to 50 percent in 2008) in an attempt to bound the range of possible outcomes. All four scenarios would result in increases in petroleum use and greenhouse gases if the incentive program were extended to 2008. The analysis also considered additional scenarios under which flexible-fuel vehicles would use E85 an average of 50 percent of the time and 100 percent of time). In the 50 percent case, petroleum consumption would not increase if the credit were extended to 2008. However, the amount of greenhouse gases produced would still increase, if the credit were extended, compared to the option of allowing the program to expire in 2004. If flexible-fuel vehicles used E85 100 percent of the time, petroleum consumption would decline, although greenhouse gases would still increase. The increase in greenhouse gases in both cases would stem from the overall increase in petroleum use by conventional vehicles allowed by the incentive program and the fact that flexible-fuel vehicles burning E85 would still generate some greenhouse gas emissions (Report Sec. V).[4]

The preceding analysis assumes that in the absence of the incentive program, manufacturers would not have produced larger, less fuel efficient vehicles. It is also possible that manufacturers might have responded to strong consumer demand for performance and utility and produced the same vehicles without the provision as they did with it. In this case, manufacturers would have chosen to pay civil penalties rather than meet the CAFE standard. Under this scenario, the main effect of the program has been to greatly expand the population of vehicles that have the potential to use alternative fuels.

In assessing the dual-fuel incentive program, the report finds that the credit program has been successful in stimulating a significant increase in the availability of alternative fuel vehicles. The existence of the incentive program was a major factor in the development and production of alternative fuel vehicles in high volumes. The existence of these vehicles has not, however, stimulated a corresponding increase in the availability of alternative fuels. The report also finds that the nation's limited capacity for producing E85 fuel could be further limited by the possibility that a gasoline additive, Methyl Tertiary-Butyl Ether (MTBE), could be replaced by ethanol. This would further constrain any future expansion of E85 use. Given the slow rate of growth in the alternative fuel infrastructure, the report states that if the incentive program were used by manufacturers to meet CAFE standards in lieu of producing more efficient vehicles, energy conservation and environmental benefits will only be realized through the extension of the incentive provisions if other incentives, programs, or market conditions stimulate the production, distribution, and use of E85 fuel. Therefore, the agency's report indicates that a number of other actions might be considered to improve the program and its chances for success.

Specific actions by Congress or others might include any or all of the following:

(1) Examine alternatives to the current dual-fuel vehicle CAFE credit program structure, such as linking the CAFE credit to actual alternative fuel used;

(2) Develop, implement, and evaluate policies, regulations, or programs to promote the actual use of alternative fuels by consumers; and

(3) Develop, implement, and evaluate policies and programs that facilitate more rapid expansion and use of the alternative fuel infrastructure. Such policies and programs should be evaluated, taking into account the availability of alternative fuel and other potential transportation uses for each fuel.

In view of the nation's energy security interests, it is important to increase alternative fuel capability throughout the fleet. Given the mixed results of the program to date, it would be prudent for Federal agencies, Congress, industry, and other interested stakeholders to identify additional programs and authorities that could contribute to achieving greater use of alternative fuels in dual-fuel vehicles that receive the CAFE credit.

C. Other Developments

In the last year, several events have transpired related to CAFE and the credit incentive provision. These are summarized below.

On May 17, 2001, the Energy Policy Development Group, led by Vice President Dick Cheney, issued its National Energy Policy. This report made recommendations to President Bush regarding the path that the administration's energy policy should take and included specific recommendations regarding vehicle fuel economy and CAFE. The report recommends that the President direct the Secretary of Transportation to

- Review and provide recommendations on establishing CAFE standards with due consideration of the National Academy of Sciences study to be released in July 2001. Responsibly crafted CAFE standards should increase efficiency without negatively impacting the U.S. automotive industry. The determination of future fuel economy standards must therefore be addressed analytically and based on sound science.
- Consider passenger safety, economic concerns, and disparate impact on the U.S. versus foreign fleet of automobiles.
- Look at other market-based approaches to increasing the national average fuel economy of new motor vehicles.

The Energy Policy Development Group also stated in its report that ethanol vehicles offer tremendous potential if ethanol production can be expanded. Additionally, the report states that, ''a considerable enlargement of ethanol production and distribution capacity would be required to expand beyond their current base in the Midwest in order to increase use of ethanol-blended fuels.''

Like the appropriations acts for the preceding five years, the fiscal year 2001 DOT Appropriations Act included the rider prohibiting the Department from revising the CAFE standards. However it

[4] This analysis assumes that, in the absence of the dual-fuel incentive, manufacturers would produce more efficient vehicles to meet the CAFE standards, rather than pay civil penalties.

also included a provision directing the Department to fund a National Academy of Sciences study on the effectiveness and impacts of CAFE standards. On July 30, 2001, the National Academy of Sciences released a preliminary report entitled, ''Effectiveness and Impact of Corporate Average Fuel Economy (CAFE) Standards.'' This report included 15 findings and seven recommendations. Recommendation 5 stated that, ''Credits for dual-fuel vehicles should be eliminated, with the provision that NHTSA's notice of such action provides enough lead-time to limit adverse impacts on the automotive industry.''

On August 2, 2001, the U.S. House of Representatives passed H.R. 4, which is entitled the Securing America's Future Energy (SAFE) Act of 2001. This bill, which has been placed on the Senate legislative calendar, includes provisions in Section 203, Dual Fueled Automobiles, which alter the AMFA CAFE credit incentive program by extending it for an additional four model years to 2008 and by extending the 1.2 mpg limitation on the maximum allowable CAFE credit that can be earned by a specific manufacturer's fleet through model year 2008 as well. The deadline for making a decision whether to extend the program beyond 2008 would be December 31, 2005, with the report on the effects of the program due on September 30, 2004.

In July 2001, Secretary Mineta sent a letter to Congress asking that the freeze on CAFE standards be lifted immediately so NHTSA could resume its CAFE rulemaking responsibilities. However, the freeze was not lifted until December 2001, when the Appropriations Act for the Department of Transportation, for the first time in six years, did not include a rider freezing CAFE standards. NHTSA immediately resumed its CAFE rulemaking responsibilities. The FY 2003 DOT budget request includes $1,000,000 to support CAFE program activities to meet those responsibilities.

D. U.S. Dependence on Imported Petroleum

The United States met 15 percent of its oil needs in 1955 through imports. The import share reached 36.8 percent by 1975, the year CAFE standards were authorized by Congress, and then peaked at 46.4 percent in 1977. Although the share declined to below 30 percent in the mid-1980's, lately, the United States has again become increasingly dependent on imported oil. Imports totaled 43.6 percent in 1992 and are anticipated to be at or over 50 percent in 2001. The Middle East controls about 65 percent of the world's oil reserves and about 35 percent of the world's natural gas reserves. North American reserves of oil amount to just 6–7 percent of world reserves, and the Department of Energy estimates that the U.S. will import 62 percent of its oil by the year 2010. Since the petroleum ''shocks'' of the 1970s, the inflation-adjusted price of crude oil has generally declined. Since the oil shocks of the 1970s several events combined to keep oil prices low: the end of the Cold War; a diminution in the market power of OPEC due to an increase in petroleum production from non-OPEC nations; and the cementing of U.S. security ties to the most important oil-exporting nations. The growing dependence of the U.S. on imported petroleum offsets the positive developments that have occurred in the global petroleum market over the past 20 years and the potential impact of a petroleum shock on the U.S. is growing.

The transportation sector remains overwhelmingly dependent on petroleum-based fuels and on technologies that provide virtually no flexibility for employing alternative to petroleum. Transportation currently accounts for approximately two-thirds of all U.S. petroleum use and roughly one-fourth of total U.S. energy consumption. Highway transportation petroleum consumption has risen from 121 billion gallons per year in 1979 to 155 billion gallons per year in 1999 (28 percent over 20 years). Given the dependency of our nation's transportation network on petroleum use, substitution of conventional petroleum fuels by non-petroleum-based fuels, including alternative fuels, could reduce America's vulnerability to disruptions in petroleum supply.

Increased use of alternative fuels can yield other economic benefits as well as improving the nation's energy security. Displacing petroleum with alternative and replacement transportation fuels helps hold down petroleum prices in two ways. First, reducing the demand for petroleum decreases the world price for oil—a 1 percent decrease in U.S. petroleum demand could, in the long term, reduce world oil price by about 0.5 percent. Short-run impacts could be even greater, due to the short-run inelasticity of oil supply and demand. An additional benefit of increased alternative or replacement fuel use is the potential to reduce the impact of a supply shortage on prices. As evidenced in the industrial and utility sectors, the existence of alternatives to oil provides potential substitutes for oil in the event of a production cutback. Since it is precisely the non-responsiveness of transportation oil demand to oil production cutbacks that makes oil price shocks possible, increasing competition for oil by using alternative fuels reduces the ability of oil suppliers to constrain supply in order to increase the price of oil.

E. Availability and Use of Alternative Fuels

Alternative fuel use in the U.S. has grown significantly since the passage of AMFA alternative fuel incentives. In 1992, alternative fuel use in the U.S. amounted to 230 million gasoline gallon equivalents; in 2000, alternative fuel use is estimated to be 368 million gasoline gallon equivalents, an overall increase of 60 percent. With the exception of methanol and E95 blend ethanol, all of the alternative fuels in use have seen notable increases in use between 1992 and 2000. An increasing number of CNG and LNG vehicles are available from original-equipment manufacturers and electricity has also enjoyed a large increase, due to the OEM offerings of electric vehicles in the Southwest. Alternative fuel use in alternative fuel vehicles has been rising at a rate three times faster than the total highway use of gasoline and diesel. Nonetheless, alternative fuel use only accounts for 0.23 percent of total highway fuel use.

The National Energy Policy Development Group, in its May 17, 2001, report on the National Energy Policy states that, ''The lack of infrastructure for alternative fuels is a major obstacle to consumer acceptance of alternative fuels and the purchase of alternative fuel vehicles.'' The lack of infrastructure is one of the main reasons why most alternative fuel vehicles actually operate on petroleum fuels. As the report noted, ''ethanol vehicles offer tremendous potential if ethanol production can be expanded.'' However, the report also states that, ''a considerable enlargement of ethanol production and distribution capacity would be required to expand beyond their current base in the Midwest in order to increase use of ethanol-blended fuels.''

The National Renewable Energy Laboratory reports that there are 5,236 alternative fuel refueling sites as of May 2001, with alternative fuel refueling sites in all 50 states. Unfortunately, while most dual-fuel vehicles use ethanol as an alternative fuel, less than three percent of U.S. alternative fuel refueling stations sell ethanol. As of May 2001, there were 121 public E85 refueling outlets in operation, up from 37 in 1995. For LPG, the most widely available alternative fuel, although it has availability in all states, there are only 3,270 outlets in the U.S. For other

gaseous alternative fuels, there are 1,237 Compressed Natural Gas (CNG) outlets in the U.S and 44 Liquified Natural Gas (LNG) refueling sites.

The Federal government, specifically DOE, the General Services Administration and the Department of Agriculture are involved with efforts to promote the use and expansion of alternative fuels and the alternative fuel infrastructure. A major focus of these efforts is the development of different feedstocks for ethanol and on partnerships that result in the expansion of the ethanol fuel infrastructure. DOE administers the Clean Cities Program, the Office of Fuels Development (OFD) alternative fuel program, and, in conjunction with the General Services Administration (GSA), the Federal AFV USER Program. Efforts by DOE are underway in Minnesota to help construct a number of ethanol refueling sites. In August 2001, the USDA announced that its agencies will use ethanol fuels in their fleet vehicles where practicable and reasonable in cost.

As ethanol fuels are generally more expensive than gasoline, cost remains an impediment to the more widespread demand that would stimulate development of the necessary infrastructure. Although the trend in alternative fuels is in the direction of E85 use, the infrastructure has been slow to develop because these vehicles also use conventional fuel. However, even if relatively few of these vehicles are actually being operated on E85, the existence of a dual fuel capable fleet could spur an increase in the number of E85 refueling sites, and provide consumers an alternative if there are gas shortages or gas prices increase significantly. The small number of outlets available today points out the need to intensify the E85 refueling infrastructure. In addition, it is safe to say that many people who have purchased flexible-fuel vehicles do not know they could use E85. More public education in areas where E85 refueling stations exist is needed to inform people so that they are aware they can use E85.

Future alternative fuel use may be affected by supply as well as demand. Water quality concerns involving the use of MTBE and the rapidly increasing number of E85 flexible-fuel vehicles may, if ethanol production is diverted to the production of an MTBE substitute, lead to insufficient ethanol to meet demand. Current ethanol supply capacity, as well as that represented by ethanol plants now planned or under construction, indicates that domestic ethanol production is now about 1.72 billion gallons per year. Plants under construction can add another 123 million gallons per year, and plants in the engineering and planning stages can add another 149 million gallons per year. If all the present and building plants are producing ethanol as planned in 2003, total ethanol production capacity that year will be about 1.99 billion gallons of ethanol per year. Capacity in 2010 could reach 2.6 billion gallons per year. However, if MTBE is banned as a gasoline additive and fuel producers replace MTBE with ethanol, it is uncertain if there will be enough refinery capacity to both replace MTBE and to fuel flexible-fuel vehicles a substantial portion of the time with E85.

III. Agency Proposal

Section 32905(f) directs NHTSA to take one of the following actions on or before December 31, 2001: Either complete a rulemaking extending the dual-fuel incentive program or issue a notice of termination ending it. The agency's ability to extend the program is not unlimited—it may only extend the incentives for Anot more than 4 consecutive model years immediately after model year 2004 * * *.''

On December 31, 2001, NHTSA issued a notice of intent to issue a notice of proposed rulemaking that was published in the **Federal Register** on January 7, 2002 (67 FR 713). In that notice, the agency explained that it was providing notice of its intention to issue a notice of proposed rulemaking to extend the dual fuel incentive program from one to four years.

The agency is proposing to extend the dual-fuel incentive program for four model years, from the 2005 through the 2008 model years. NHTSA has tentatively concluded that extension of the dual-fuel incentive program for four model years would be appropriate and consistent with the goals of both the incentive program and the CAFE program as a whole.

The dual-fuel incentive program, which envisions a reduction in petroleum dependence through the development of alternative fuels, accepts an interim increase in the consumption of petroleum fuels in pursuit of that end. When Congress conceived the incentive program, it was aware of the risk that manufacturers would avail themselves of gains in fleet fuel economy by building dual-fueled vehicles regardless of whether the vehicles ever used an alternative fuel. Concern about this possibility and the increase in the use of petroleum that could result, led to the enactment of two limits on the incentive program. One of these limits, now at issue, was to make the incentive available for the 1993–2004 model years, with the possibility of an extension of up to four model years, i.e., through the 2008 model year. The other limit was to place a cap of 1.2 mpg on the maximum increase in fleet fuel economy available from the use of the incentives for the 1993–2004 model years and 0.9 mpg for any of the model year(s) to which the program was extended by NHTSA. The existence and nature of these limits indicates that Congress understood that the incentive program could result in increased petroleum use, that any increases in petroleum use would be limited to the life of the program, and that, if the program were extended, that the extent of increased petroleum use would be controlled.

The existence of the dual-fuel incentives has spurred a large increase in the production of these vehicles in recent years. Technologies have been developed to the degree that dual-fueled vehicles are as reliable and as useful as their conventionally fueled counterparts. Fleet operators and others with access to gaseous fuels are, to a limited extent, using gaseous dual-fueled vehicles. Liquid fueled dual-fueled vehicles capable of operating on E85 or gasoline are being produced in significant numbers. These E85 vehicles may use either gasoline or E85 interchangeably with no input required from the vehicle operator, save the selection of the fuel to be used when filling the tank. With the exception of decreased range resulting from the slightly lower energy content of E85, a liquid dual-fueled vehicle performs as well on E85 as it does on gasoline.

Production of E85 vehicles steadily increased through the 2000 model year, but slightly decreased in the 2001 model year, as dual-fuel technology has matured and manufacturers rely on the incentives to assist them in meeting CAFE requirements. For example, no liquid fuel dual-fueled light trucks were produced in 1997. However, over 1.4 million dual-fueled light trucks were produced in the 1998—2001 model years. In the 2000 model year, close to 7.6 percent, and in the 2001 model year, 4.6 percent of all light trucks produced were dual-fueled vehicles. About 1.4 percent of passenger cars produced in the 2000 model year and 0.8 percent produced in the 2001 model year were dual-fueled vehicles (compared to .025 percent in 1993). As of the 2001 model year, 217,000 E–85 dual-fueled passenger cars and 1,446,000 E–85 dual-fueled light trucks had been produced. Comments submitted in response to the agency's request for information prior to preparation of NHTSA's report to Congress indicate that manufacturers

plan to produce increasing numbers of dual-fueled vehicles as part of their overall strategy for meeting CAFE requirements.

NHTSA notes that almost all of the dual-fueled vehicles produced in the U.S. have been built since the 1997 model year. While the incentive program has been in place since the 1993 model year, manufacturer efforts in the first several years of the incentive program were primarily directed at the development of methanol-fueled (M85) vehicles. While these efforts met with some success, methanol's corrosive properties, problems with the quality of methanol fuels and increased demand for methanol in conventional fuel additives led to a change in direction toward the development and production of ethanol (E85) vehicles. The first production E85 dual-fueled vehicles appeared in the 1998 model year and are the only vehicles that have been produced in significant quantities since the inception of the incentive program.

In terms of stimulating dual-fueled vehicle production, the incentive program appears to be meeting the expectations of Congress. Reliable dual-fueled vehicles that perform well while operating on an alternative fuel are becoming available in increasing numbers. In some instances, manufacturers are producing enough dual-fueled vehicles to enable them to obtain close to the maximum benefit under the incentive. Although these vehicles, the vast majority of which are E85 dual-fueled vehicles, have only begun to be produced in significant numbers, the comments submitted in response to NHTSA's May 9, 2000 request for comments indicate that the incentive program is the principal impetus for their development and manufacture. The incentive program has therefore begun to satisfy one component of AMFA's overall goal of encouraging the development of alternative fuel vehicles.

The success of the incentive program in stimulating the production of vehicles has not yet resulted either in increased demand for alternative fuels or a corresponding increase in availability of these fuels. Despite the presence of approximately 1.7 million E85 capable dual-fueled vehicles in the U.S. fleet, owners of these vehicles are unlikely to be able to use E85 fuel, particularly if they live in one of the 32 states without any E85 fuel stations. At present, there are less than 140 E85 stations in the U.S. The majority of these stations are located in the Midwestern and north central states with 60 stations in Minnesota, 13 in Illinois, 10 in Iowa, 8 in Michigan, 7 apiece in South Dakota, Nebraska and Kentucky and 5 in Missouri.[5] While the number of E85 stations has increased during the course of the incentive program, the growth that has occurred has not yet resulted in a degree of expansion suggesting that E85 is likely to serve as a viable alternative to petroleum fuels in the near future.

In one sense, the lack of development of an alternative fuel infrastructure is indicative of the technology and marketing of dual-fueled vehicles. Dual-fueled vehicles perform as well when operated on gasoline as conventionally fueled vehicles. It is possible that owners of these vehicles often remain unaware that the vehicle can be operated on an alternative fuel or, in those areas where alternative fuel is available, where they can purchase alternative fuel. Although some manufacturers have made efforts to improve owner awareness of the unique capability of these dual-fueled vehicles, the fact remains that the dual-fuel capabilities of these vehicles are often not well known.

Owner unawareness of dual-fuel capability is not the only obstacle to increased alternative fuel use. As noted above, there are presently very few E85 stations in the United States. Even in those locations where E85 is available, it has not historically been price competitive with gasoline, particularly when the price is adjusted to reflect E85's lower energy content. The lower energy content of E85 also results in a slight reduction in driving range when compared with gasoline. Those consumers who are aware of their vehicle's ability to use an alternative fuel most likely will not choose to use alternative fuels unless they are more attractive than gasoline.

Development of an alternative fuel infrastructure is also dependent on the supply of alternative fuels. As noted above, current ethanol production in the United States is approximately 1.7 billion gallons per year. As that capacity increases, ethanol production is projected to reach approximately 2 billion gallons per year. A substantial percentage of this production capacity is used to produce additives for conventional gasoline or to produce gasohol (90 percent gasoline/10 percent ethanol). As NHTSA notes in its report to Congress, about 400 million gallons of ethanol were available for use in E85 fuel for dual-fueled vehicles in 2000. The agency also notes that it anticipates that the amount of ethanol available for E85 dual-fueled vehicles would rise to approximately 1 billion gallons in 2010.

Future availability of ethanol for the E85 fuel used by most dual-fueled vehicles is further complicated by changes in the formulation of petroleum fuels. Much of the ethanol produced now is used for conventional fuel additives. This use may increase dramatically due to concerns about methyl tertiary butyl ether (MTBE). MTBE is an additive that has been used in U.S. gasoline as an octane enhancer since 1979. Because MTBE use in gasoline reduces certain emissions, it has been used in higher concentrations since 1992 in certain geographic areas to fulfill the oxygenate requirements set by Congress in the 1990 Clean Air Act Amendments. Recent concerns about MTBE in groundwater resulting from leaking underground storage tanks has led to a reexamination of policies regarding its use.

While a variety of approaches are being considered, there is a possibility that the use of ethanol as an MTBE substitute may spur a substantial increase in demand for ethanol. If this were to occur, the increased demand for ethanol as an additive might restrict the availability of ethanol as a fuel until production capacity is increased. However, once the demand for ethanol-based additives stabilized, the increased production capacity might make more ethanol available as fuel. NHTSA is concerned that the increased demand for ethanol additives might restrict the availability of ethanol fuel, particularly in the next few years. As temporary shortages of ethanol might impact the success of the incentive program in the near term, NHTSA believes that a full four-year extension of the program might be necessary to allow ethanol production to grow sufficiently to meet the demand for additives to petroleum fuel and ethanol fuel itself.

The agency's proposal to extend the incentive program for four years is an attempt to reconcile the promise of an increasingly large fleet of dual-fueled vehicles with the constraints preventing the development of the dual-fuel infrastructure envisioned by Congress. The existence of the incentive program has provided considerable impetus to the development and refinement of both gaseous and liquid fueled dual-fueled vehicles. After efforts in the early years of the incentive program revealed technological barriers to practical methanol fueled vehicles, industry efforts turned to the development of ethanol capable vehicles. The maturation of ethanol capable dual-fueled vehicle technology did not occur until well after the incentive program

[5] A list of alternative fuel stations maintained by the Department of Energy may be accessed at http://www.afdc.nrel.gov/refueling.html.

began in the 1993 model year. As dual-fueled vehicle production has only recently begun to result in significant numbers of dual-fueled vehicles in actual use, NHTSA believes that that termination of the incentive program before the end of the 2008 model year would be premature. The added numbers of dual-fueled vehicles now in use, in combination with those that will be produced in the 2002 through 2008 model years, may spur increased consumption and availability of alternative fuels. In addition, the Federal government, and specifically DOE, the General Services Administration and the Department of Agriculture are involved with efforts to promote the use and expansion of alternative fuels and the alternative fuel infrastructure. These programs may also bear fruit in the form of increased alternative fuel use. Unfortunately, NHTSA does not now have the opportunity to wait and examine the impact these vehicles may have.

The agency's tentative decision to extend the incentive program for four years is based on its assessment that the energy and other costs of the incentive program are justified by the potential benefits. We are unable to predict with certainty how much alternative fuel use, which is a critical element to the realization of benefits, will increase.[6] Adoption of the proposed four-year extension entails a risk that manufacturers might be producing dual-fuel vehicles that operate only on petroleum fuel. On the other hand, if the agency were to allow the program to terminate, there would be an equal risk that late-blooming alternative fuel technology and production would be wasted and the opportunities for eventual reductions in petroleum use would be lost. A four-year extension is, in NHTSA's view, a reasonable reconciling of those risks. Such an extension will provide opportunities for further development of measures to encourage alternative fuel use and, if those policies are successful, result in the development of a domestic fuel supply and infrastructure with either little or no increase in petroleum use. As noted above, the maximum incentive benefit available in the 2005 through 2008 model years is an 0.9 mpg increase in a manufacturer's fleet average. This limitation on the maximum benefit modifies the impact of the incentive program's special fuel economy calculation for dual-fueled vehicles. Manufacturers will be required to increase the efficiency of their conventionally fueled fleet to make up for the reduction in the dual-fuel incentive. If alternative fuel use has not increased, the 0.9 mpg cap will restrict the negative impacts of the incentive program.

[6] Many of those responding to NHTSA's May 9, 2000 request for comments suggested that a number of measures be implemented to make alternative fuels more attractive to consumers. These suggested measures, which included reductions in fuel taxes on alternative fuels, tax credits for alternative fuel use or alternative fuel vehicles and other market incentives, are initiatives that are beyond NHTSA's authority.

IV. Benefits and Costs

In the preliminary economic assessment, the agency examined two scenarios examining the impact of extending the incentive program on consumers by projecting the increased fuel costs resulting from less efficient conventionally fueled vehicles being available in the marketplace. One scenario, scenario 1, is based on the 2001 model year combined fuel economy of GM, Ford, and Daimler/Chrysler light trucks of 20.07 mpg. Scenario 1 examined the 2001 model year fuel economy for these manufacturers without operation of the incentive and with the incentive in place. (20.52 mpg versus 20.07 mpg.) As the incentive program allows the production of less fuel efficient vehicles, the lower average fuel economy will result in the average light truck purchaser's vehicle consuming more fuel (on average 308 gallons) over its lifetime and costing $129 more (present discounted value) to operate in fuel over the vehicle's lifetime. Scenario 2 examined the potential credit of 0.9 mpg that could be taken during the extension years, so it compared 20.97 mpg versus 20.07 mpg. From a light truck purchaser's perspective, the lower average fuel economy will result in their vehicle consuming more fuel (on average 411 gallons) over its lifetime and costing $244 more (present discounted value) to operate in fuel over the vehicles' lifetime.

Scenario 1 could result in an additional 1.7 billion gallons of gasoline being used over the lifetime of one model year's fleet of light trucks at a present discounted value of $727 million. Scenario 2 could result in an additional 2.3 billion gallons of gasoline being used over the lifetime of one model year's fleet of light trucks at a present discounted value of $1,375 million.

Because there are a variety of ways to improve fuel economy, and our ability to collect and analyze data had been restricted under the CAFE freeze for the preceding six fiscal years, we are unable at this time to determine what are the benefits to the light truck purchaser to offset the increase in fuel costs. The light truck purchaser may get more choices of large light trucks and sport utility vehicles in the market, perhaps the ability to choose a larger engine, or perhaps savings in initial vehicle prices if weight reductions due to material substitutions, or fuel economy technologies are not added to the vehicle. It is entirely possible that the value vehicle purchasers place on these attributes exceeds the cost of the extra gasoline these vehicles use.

V. Rulemaking Notices and Analyses

A. Executive Order 12866 and DOT Regulatory Policies and Procedures

Executive Order 12866, ''Regulatory Planning and Review'' (58 FR 51735, October 4, 1993), provides for making determinations whether a regulatory action is ''significant'' and therefore subject to Office of Management and Budget (OMB) review and to the requirements of the Executive Order. The Order defines a ''significant regulatory action'' as one that is likely to result in a rule that may:

(1) Have an annual effect on the economy of $100 million or more or adversely affect in a material way the economy, a sector of the economy, productivity, competition, jobs, the environment, public health or safety, or State, local, or Tribal governments or communities;

(2) Create a serious inconsistency or otherwise interfere with an action taken or planned by another agency;

(3) Materially alter the budgetary impact of entitlements, grants, user fees, or loan programs or the rights and obligations of recipients thereof; or

(4) Raise novel legal or policy issues arising out of legal mandates, the President's priorities, or the principles set forth in the Executive Order.

This proposal is economically significant. While the proposal does not require the production of alternative fuel vehicles, it allows manufacturers producing dual-fuel vehicles to produce less efficient conventionally fueled vehicles. The impact of the production of these less efficient vehicles may result in additional annual fuel costs of more than $100 million. Accordingly, it was reviewed under Executive Order 12866. The rule is also significant within the meaning of the Department of Transportation's Regulatory Policies and Procedures.

Because this proposed rule is economically significant, the agency has prepared a Preliminary Economic Analysis (PEA). This analysis is summarized above in the sections on Benefits and Costs. The PEA is available

in the docket and has been placed on the agency's website along with the proposal itself.

B. Regulatory Flexibility Act

Pursuant to the Regulatory Flexibility Act (5 U.S.C. 601 *et seq.*, as amended by the Small Business Regulatory Enforcement Fairness Act (SBREFA) of 1996), whenever an agency is required to publish a notice of rulemaking for any proposed or final rule, it must prepare and make available for public comment a regulatory flexibility analysis that describes the effect of the rule on small entities (*i.e.*, small businesses, small organizations, and small governmental jurisdictions). The Small Business Administration's regulations at 13 CFR part 121 define a small business, in part, as a business entity ''which operates primarily within the United States.'' (13 CFR 121.105(a)). No regulatory flexibility analysis is required if the head of an agency certifies the rule will not have a significant economic impact on a substantial number of small entities. SBREFA amended the Regulatory Flexibility Act to require Federal agencies to provide a statement of the factual basis for certifying that a rule will not have a significant economic impact on a substantial number of small entities.

NHTSA has considered the effects of this proposed rule under the Regulatory Flexibility Act. I certify that this proposed rule would not have a significant economic impact on a substantial number of small entities. The rationale for this certification is that there are not currently any small motor vehicle manufacturers in the United States building vehicles that would be affected by the extension of the dual-fuel incentive credit.

C. National Environmental Policy Act

NHTSA has analyzed this rulemaking action for the purposes of the National Environmental Policy Act. The agency has performed a preliminary Environmental Assessment and determined that implementation of this proposed rule will not have a significant impact on the quality of the human environment. Adoption of this proposed rule is likely to result in increased vehicle emissions and an increase in greenhouse gases, depending on the amount of alternative fuel consumed by dual-fueled vehicles manufactured in response to the rule. Such increases will stem largely from the production of larger, less fuel efficient vehicles made possible by the propose extension. However, under any scenario, the amount of increased emissions represents a very small percentage of overall emissions resulting from the consumption of petroleum fuels by highway vehicles.

D. Executive Order 13132 (Federalism)

Executive Order 13132 requires NHTSA to develop an accountable process to ensure ''meaningful and timely input by State and local officials in the development of regulatory policies that have federalism implications.'' ''Policies that have federalism implications'' is defined in the Executive Order to include regulations that have ''substantial direct effects on the States, on the relationship between the national government and the States, or on the distribution of power and responsibilities among the various levels of government.'' Under Executive Order 13132, the agency may not issue a regulation with Federalism implications, that imposes substantial direct compliance costs, and that is not required by statute, unless the Federal government provides the funds necessary to pay the direct compliance costs incurred by State and local governments, the agency consults with State and local governments, or the agency consults with State and local officials early in the process of developing the proposed regulation. NHTSA also may not issue a regulation with Federalism implications and that preempts State law unless the agency consults with State and local officials early in the process of developing the proposed regulation.

The agency has analyzed this proposed rule in accordance with the principles and criteria set forth in Executive Order 13132 and has determined that it would not have sufficient federalism implications to warrant consultation with State and local officials or the preparation of a federalism summary impact statement. The proposal to extend the dual-fuel incentive program through the 2008 model year may result in additional conventional fuel costs for state and local governments. At the same time, extension of the incentive program will ensure that dual fuel vehicles, which state and local governments are required to use by other federal mandates, will be available at lower costs. Any increased costs that would not be offset by the continued availability of lower cost dual fuel vehicles, however, are not direct costs. The agency's proposal would not otherwise have any substantial effects on the States, or on the current Federal-State relationship, or on the current distribution of power and responsibilities among the various local officials.

E. Civil Justice Reform

This proposed amendment would not have any retroactive effect. 49 U.S.C. 30161 sets forth a procedure for judicial review of final rules establishing, amending, or revoking Federal motor vehicle safety standards. That section does not require submission of a petition for reconsideration or other administrative proceedings before parties may file suit in court.

F. Paperwork Reduction Act

Under the Paperwork Reduction Act of 1995, a person is not required to respond to a collection of information by a Federal agency unless the collection displays a valid OMB control number. This proposed rule would not require any new collections of information as defined by the OMB in 5 CFR part 1320. Data regarding production of dual-fuel vehicles would be submitted to the agency under the existing procedures found in 49 CFR part 537.

G. National Technology Transfer and Advancement Act

Section 12(d) of the National Technology Transfer and Advancement Act of 1995 (NTTAA), Public Law 104–113, section 12(d) (15 U.S.C. 272) directs us to use voluntary consensus standards in our regulatory activities unless doing so would be inconsistent with applicable law or otherwise impractical. Voluntary consensus standards are technical standards (e.g., materials specifications, test methods, sampling procedures, and business practices) that are developed or adopted by voluntary consensus standards bodies, such as the Society of Automotive Engineers (SAE). The NTTAA directs us to provide Congress, through OMB, explanations when we decide not to use available and applicable voluntary consensus standards.

There are no voluntary consensus standards available at this time. However, NHTSA will consider any such standards if they become available.

H. Unfunded Mandates Reform Act

Section 202 of the Unfunded Mandates Reform Act of 1995 (UMRA) requires Federal agencies to prepare a written assessment of the costs, benefits, and other effects of proposed or final rules that include a Federal mandate likely to result in the expenditure by State, local or tribal governments, in the aggregate, or by the private sector, of more than $100 million in any one year (adjusted for inflation with base year of 1995). Before promulgating a rule for which a written statement is needed,

section 205 of the UMRA generally requires NHTSA to identify and consider a reasonable number of regulatory alternatives and adopt the least costly, most cost-effective, or least burdensome alternative that achieves the objectives of the rule. The provisions of section 205 do not apply when they are inconsistent with applicable law. Moreover, section 205 allows NHTSA to adopt an alternative other than the least costly, most cost-effective, or least burdensome alternative if the agency publishes with the final rule an explanation why that alternative was not adopted.

This proposed rule would not result in the expenditure by State, local, or tribal governments, in the aggregate, of more than $100 million annually.

I. Plain Language

Executive Order 12866 requires each agency to write all rules in plain language. Application of the principles of plain language includes consideration of the following questions:

—Have we organized the material to suit the public's needs?
—Are the requirements in the rule clearly stated?
—Does the rule contain technical language or jargon that is not clear?
—Would a different format (grouping and order of sections, use of headings, paragraphing) make the rule easier to understand?
—Would more (but shorter) sections be better?
—Could we improve clarity by adding tables, lists, or diagrams?
—What else could we do to make this rulemaking easier to understand?

If you have any responses to these questions, please include them in your comments on this NPRM.

J. Regulation Identifier Number (RIN)

The Department of Transportation assigns a regulation identifier number (RIN) to each regulatory action listed in the Unified Agenda of Federal Regulations. The Regulatory Information Service Center publishes the Unified Agenda in April and October of each year. You may use the RIN contained in the heading at the beginning of this document to find this action in the Unified Agenda.

VI. Preparation and Submission of Comments

When Is the Comment Closing Date?

NHTSA has determined that it is necessary to provide a comment period of less than 60 days because of the statutory requirement to issue a final rule by December 31, 2001.

Will the Agency Consider Late Comments?

We will consider all comments that Docket Management receives before the close of business on the comment closing date indicated above under **DATES.** To the extent possible, we will also consider comments that Docket Management receives after that date. If Docket Management receives a comment too late for us to consider it in developing a final rule (assuming that one is issued), we will consider that comment as an informal suggestion for future rulemaking action.

How Do I Prepare and Submit Comments?

Your comments must be written and in English. To ensure that your comments are correctly filed in the Docket, please include the docket number of this document in your comments.

Your comments must not be more than 15 pages long. (49 CFR 553.21). We established this limit to encourage you to write your primary comments in a concise fashion. However, you may attach necessary additional documents to your comments. There is no limit on the length of the attachments.

Please submit two copies of your comments, including the attachments, to Docket Management at the address given above under **ADDRESSES.**

In addition, given the statutory deadline of December 31, 2001, for issuance of the final rule, for those comments of 4 or more pages in length, we request that you send 10 additional copies, as well as one copy on computer disc, to: Mr. Kenneth Katz, Office of Consumer Programs, National Highway Traffic Safety Administration, 400 Seventh Street, SW, Washington, DC 20590. We emphasize that this is not a requirement. However, we ask that you do this to aid us in expediting our review of all comments. The copy on computer disc may be in any format, although we would prefer that it be in WordPerfect 8 or Word 2000.

You may also submit your comments to the docket electronically by logging onto the Dockets Management System website at *http://dms.dot.gov.* Click on ''Help & Information'' or ''Help/Info'' to obtain instructions for filing the document electronically.

How Can I Be Sure That My Comments Were Received?

If you wish Docket Management to notify you upon its receipt of your comments, enclose a self-addressed, stamped postcard in the envelope containing your comments. Upon receiving your comments, Docket Management will return the postcard by mail.

How Do I Submit Confidential Business Information?

If you wish to submit any information under a claim of confidentiality, you should submit three copies of your complete submission, including the information you claim to be confidential business information, to the Chief Counsel, NHTSA, at the address given above under **FOR FURTHER INFORMATION CONTACT.** In addition, you should submit two copies, from which you have deleted the claimed confidential business information, to Docket Management at the address given above under **ADDRESSES.** When you send a comment containing information claimed to be confidential business information, you should include a cover letter setting forth the information specified in our confidential business information regulation. (49 CFR part 512.)

How Can I Read the Comments Submitted by Other People?

You may read the comments received by Docket Management at the address given above under **ADDRESSES.** The hours of the Docket are indicated above in the same location.

You may also see the comments on the Internet. To read the comments on the Internet, take the following steps:

1. Go to the Docket Management System (DMS) Web page of the Department of Transportation (*http://dms.dot.gov/*).
2. On that page, click on ''search.''
3. On the next page (http://dms.dot.gov/search/), type in the four-digit docket number shown at the beginning of this document. Example: If the docket number were NHTSA–1998–1234, you would type ''1234.'' After typing the docket number, click on ''search.''
4. On the next page, which contains docket summary information for the docket you selected, click on the desired comments. You may download the comments. Although the comments are imaged documents, instead of word processing documents, the ''pdf'' versions of the documents are word searchable.

Please note that even after the comment closing date, we will continue to file relevant information in the Docket as it becomes available. Further, some people may submit late comments. Accordingly, we recommend that you periodically check the Docket for new material.

List of Subjects in 49 CFR Part 538

Energy conservation, Gasoline, Imports, Motor vehicles.

In consideration of the foregoing, NHTSA proposes to amend 49 CFR part 538 as follows:

PART 538—MANUFACTURING INCENTIVES FOR ALTERNATIVE FUELED VEHICLES

1. The authority citation for part 538 of Title 49 would continue to read as follows:

Authority: 49 U.S.C. 32901, 32905, and 32906; delegation of authority at 49 CFR 1.50.

2. Section 538.1 would be revised to read as follows:

§ 538.1 Scope.

This part establishes minimum driving range criteria to aid in identifying passenger automobiles that are dual-fueled automobiles. It also establishes gallon equivalent measurements for gaseous fuels other than natural gas. This part also extends the dual-fuel incentive program.

3. Section 538.2 would be revised to read as follows:

§ 538.2 Purpose.

The purpose of this part is to specify one of the criteria in 49 U.S.C. chapter 329 ''Automobile Fuel Economy'' for identifying dual-fueled passenger automobiles that are manufactured in model years 1993 through 2004. The fuel economy of a qualifying vehicle is calculated in a special manner so as to encourage its production as a way of facilitating a manufacturer's compliance with the Corporate Average Fuel Economy Standards set forth in part 531 of this chapter. The purpose is also to establish gallon equivalent measurements for gaseous fuels other than natural gas. This part also specifies the model years after 2004 in which the fuel economy of dual-fueled automobiles may be calculated under the special incentive provisions found in 49 U.S.C. 32905(b) and (d).

4. Section 538.9 would be added to read as follows:

§ 538.9 Dual fuel vehicle incentive.

The application of 49 U.S.C. 32905(b) and (d) to qualifying dual fuel vehicles is extended to the 2005, 2006, 2007, and 2008 model years.

Issued on March 6, 2002.

Stephen R. Kratzke,

Associate Administrator for Safety Performance Standards.

[FR Doc. 02–5790 Filed 3–6–02; 3:58 pm]

BILLING CODE 4910–59–P

Notices

Federal Register

Vol. 67, No. 47

Monday, March 11, 2002

This section of the FEDERAL REGISTER contains documents other than rules or proposed rules that are applicable to the public. Notices of hearings and investigations, committee meetings, agency decisions and rulings, delegations of authority, filing of petitions and applications and agency statements of organization and functions are examples of documents appearing in this section.

DEPARTMENT OF AGRICULTURE

Commodity Credit Corporation

Request for Reinstatement and Revision of a Previously Approved Information Collection

AGENCY: Commodity Credit Corporation (CCC), USDA.

ACTION: Notice and request for comments.

SUMMARY: In accordance with the Paperwork Reduction Act of 1995, this notice announces the intention of CCC to request reinstatement and revision of an information collection previously approved with respect to the Upland Cotton User Marketing Certificate Program (Step 2 program). The information collection will allow CCC to administer the Step 2 program.

DATES: Comments on this notice must be received on or before May 10, 2002, to be assured consideration.

ADDITIONAL INFORMATION OR COMMENTS: Contact Timothy Murray, USDA, Farm Service Agency, Warehouse and Inventory Division, Inventory Management Branch, STOP 0553, 1400 Independence Avenue, SW., Washington, DC 20250–0553, (202) 720–7398; e-mail *Tim_Murray@wdc.fsa.usda.gov.*

SUPPLEMENTARY INFORMATION:

Title: Upland Cotton Domestic User/Exporter Agreement and Payment Program.

OMB Control Number: 0560–0136.

Expiration Date of Approval: February 28, 2002.

Type of Request: Reinstatement and Revision of a Previously-Approved Information Collection.

Abstract: The information collected under OMB Control Number 0560–0136, as identified above, allows CCC to administer the Upland Cotton User Agreement and User Marketing Certificate Program as authorized by the Federal Agriculture Improvement and Reform Act of 1996 (1996 Act). Section 136(a) of the 1996 Act authorizes payments to eligible U.S. textile manufacturers and exporters under the Upland Cotton User Marketing Certificate Program if, for 4 consecutive weeks, (1) the U.S. Northern Europe price, as quoted for Middling 1 3/32-inch cotton, exceeds the Northern Europe price by more than 1.25 cents per pound, and (2) the prevailing upland cotton adjusted world market price is less than 134 percent of the current-crop base quality loan rate. Currently, to participate in the program, manufacturers and exporters must sign an agreement with CCC using form CCC–1045. Domestic manufacturers must report to CCC their weekly consumption of cotton as a basis for making payments. Exporters must provide basic shipping and invoice information for each shipment of cotton. No change is proposed in the existing information collection requirements, and program participants will not be required to sign a new agreement upon OMB's extension of this information collection. CCC provides a suggested format for the reports but program participants may submit the same information to CCC in a format that is convenient for them.

Estimate of Burden: Public reporting burden for this information collection is estimated to average 14 minutes per response.

Respondents: U.S. cotton exporters and U.S. cotton mills.

Estimated Number of Respondents: 310.

Estimated Number of Responses Per Respondent: 65.

Estimated Total Annual Burden on Respondents: 4,700 hours.

Comments are requested regarding (a) whether the collection of information is necessary for the proper performance of the functions of the agency, including whether the information will have practical utility; (b) the accuracy of the agency's estimate of burden including the validity of the methodology and assumptions used; (c) ways to enhance the quality, utility and clarity of the information to be collected; and (d) ways to minimize the burden of the collection of information on those who are to respond, including through the use of appropriate automated, electronic, mechanical, or other technological collection techniques or other forms of information technology.

Comments should be sent to the Desk Officer for Agriculture, Office of Information and Regulatory Affairs, Office of Management and Budget, Washington, D.C. 20503, and to Timothy Murray at the address listed above. All comments will become a matter of public record.

A comment to OMB is best assured of having its full effect if OMB receives it within 60 days of publication.

Signed at Washington, DC, on February 15, 2002.

James R. Little,

Executive Vice President, Commodity Credit Corporation.

[FR Doc. 02–5762 Filed 3–8–02; 8:45 am]

BILLING CODE 3410–05–P

DEPARTMENT OF AGRICULTURE

Food Safety and Inspection Service

[Docket No. 02–001N]

Codex Alimentarius Commission: 30th Session of the Codex Committee on Food Labelling

AGENCY: Office of the Under Secretary for Food Safety, USDA.

ACTION: Notice of public meeting, request for comments.

SUMMARY: The Office of the Under Secretary for Food Safety, U.S. Department of Agriculture (USDA), and the Food and Drug Administration (FDA), are sponsoring a public meeting on March 19, 2002, to provide information and receive public comments on agenda items that will be discussed at the Codex Committee on Food Labelling (CCFL), which will be held in Halifax, Canada on May 6–10, 2002. The Under Secretary and FDA recognize the importance of providing interested parties the opportunity to obtain background information on the Thirtieth Session of the Food Labelling Committee of the Codex Alimentarius Commission (Codex) and to address items on the Agenda for the 30th CCFL.

DATES: The public meeting is scheduled for Tuesday, March 19th, 2002, from 1 p.m. to 5 p.m.

ADDRESSES: The public meeting will be held at the Auditorium, Harvey W. Wiley Federal Building, 5100 Paint Branch Parkway, College Park, MD. To receive copies of the documents referenced in the notice contact the FSIS

Docket Clerk, U.S. Department of Agriculture, Food Safety and Inspection Service, Room 102, Cotton Annex, 300 12th Street, SW., Washington, DC 20250–3700. The documents will also be accessible via the World Wide Web at the following address: *http://www.codexalimentarius.net.* If you have comments, please send an original and two copies to the FSIS Docket Room, Docket #02–001N. All comments submitted will be available for public inspection in the Docket Clerk's Office between 8:30 a.m. and 4:30 p.m., Monday through Friday.

FOR FURTHER INFORMATION CONTACT: Dr. F. Edward Scarbrough, U.S. Manager for Codex, U.S. Codex Office, FSIS Room 4861, South Building, 1400 Independence Avenue SW., Washington, DC 20250–3700, *Phone:* (202) 205–7760, *Fax:* (202) 720–3157. Persons requiring a sign language interpreter or other special accommodations should notify Dr. F. Edward Scarbrough at the above telephone number.

SUPPLEMENTARY INFORMATION:

Background

Codex was established in 1962 by two United Nations organizations, the Food and Agriculture Organization (FAO) and the World Health Organization (WHO). Codex is the major international organization for protecting the health and economic interests of consumers and encouraging fair international trade in food. Through adoption of food standards, codes of practice, and other guidelines developed by its committees, and by promoting their adoption and implementation by governments, Codex seeks to ensure that the world's food supply is sound, wholesome, free from adulteration, and correctly labeled. In the United States, USDA, FDA, and EPA manage and carry out U.S. Codex activities.

The Codex Committee on Food Labeling drafts provision on labeling applicable to all foods; considers, amends if necessary, and endorses specific provisions on labeling of draft standards, codes of practice, and guidelines prepared by other Codex committees; studies specific labeling problems assigned to it by the Commission; and studies problems associated with the advertisement of food with particular reference to claims and misleading descriptions. The Committee is chaired by Canada.

Issues To Be Discussed at the Public Meeting

The provisional agenda items will be discussed during the public meeting:

1. Adoption of the Agenda.
2. Matters referred by the Codex Alimentarius Commission and other Codex Committees.
3. Consideration of Labelling Provisions in Draft Codex Standards.
4. Guidelines for the Production, Processing, Labelling and Marketing of Organically Produced Foods: Proposed Draft Revised Sections: Section 5—Criteria and Annex Annex 2—Permitted Substances.
5. (a) Draft Recommendations for the Labelling of Foods obtained through Certain Techniques of Genetic Modification/Genetic Engineering (Draft Amendment to the General Standard for the Labelling of Prepackaged Foods): Definitions.

(b) Proposed Draft Recommendations for the Labelling of Foods obtained through Certain Techniques of Genetic Modification/Genetic Engineering (Proposed Draft Guidelines for the Labelling of Foods and Food Ingredients Obtained through Certain Techniques of Genetic Modification/Engineering): Labelling Provisions.

6. Draft Amendment to the General Standard for the Labelling of Prepackaged Foods (Class names).
7. Proposed Draft Amendment to the Guidelines on Nutrition Labelling (Section 3.2 Listing of Nutrients).
8. Proposed Draft Recommendations for the Use of Health and Nutrition Claims.
9. Proposed Draft Amendment to the General Standard for the Labelling of Prepackaged Foods: Quantitative Declaration of Ingredients.
10. Discussion Paper on Country of Origin Labelling.
11. Discussion Paper on Misleading Claims.

Each issue listed will be fully described in documents distributed, or to be distributed, by the Canadian Secretariat to the Meeting. Members of the public may access or request copies of these documents (see **ADDRESSES**).

Public Meeting

At the March 19th public meeting, the agenda items will be described, discussed, and attendees will have the opportunity to pose questions and offer comments. Comments may be sent to the FSIS Docket Room (*see* **ADDRESSES**). Written comments should state that they relate to activities of the 30th CCFL.

Additional Public Notification

Pursuant to Departmental Regulation 4300–4, ''Civil Rights Impact Analysis,'' dated September 22, 1993, FSIS has considered the potential civil rights impact of this notice on minorities, women, and persons with disabilities. Therefore, to better ensure that these groups and others are made aware of this meeting, FSIS will announce it and provide copies of the **Federal Register** publication in the FSIS Constituent Update.

The Agency provides a weekly FSIS Constituent Update, which is communicated via fax to over 300 organizations and individuals. In addition, the update is available on line through the FSIS Web page located at *http://www.fsis.usda.gov.* The update is used to provide information regarding Agency policies, procedures, regulations, **Federal Register** Notices, FSIS public meetings, recalls and any other types of information that could affect or would be of interest to our constituents/stakeholders. The constituent fax list consists of industry, trade, and farm groups, consumer interest groups, allied health professionals, scientific professionals and other individuals that have requested to be included. Through these various channels, the Agency is able to provide information with a much broader, more diverse audience.

For more information and to be added to the constituent fax list, fax your request to the Office of Congressional and Public Affairs, at (202) 720–5704.

Done at Washington, DC, on March 6, 2002.

F. Edward Scarbrough,

U.S. Manager for Codex Alimentarius.

[FR Doc. 02–5761 Filed 3–8–02; 8:45 am]

BILLING CODE 3410–DM–P

DEPARTMENT OF AGRICULTURE

Forest Service

Red Star Restoration; Tahoe National Forest, Placer County, CA

AGENCY: Forest Service, USDA.

ACTION: Notice of intent to prepare an environmental impact statement.

SUMMARY: The Star Fire burned 16,600 acres in August and September 2001, on the Tahoe and Eldorado National Forests. Of the total fire, approximately 9,478 acres of National Forest System (NFS) land burned on the Foresthill Ranger District of the Tahoe National Forest. The USDA, Forest Service, Tahoe National Forest will prepare an environmental impact statement (EIS) on a proposal to reduce the fuel loading by removing fire-killed trees on approximately 7,700 acres on the Foresthill Ranger District as a result of the Star Fire. The Eldorado National Forest is preparing a separate environmental impact statement for

NFS land burned on the Eldorado titled Star Fire Restoration (February 2001). Both EISs will address cumulative effects of the projects.

The purpose of the project is to manage predicted surface fuel accumulations resulting from fire-killed trees and vegetation to move the conditions towards natural fire regimes more rapidly, re-establish forest vegetation to restore old forest characteristics and wildlife habitat, restore riparian and upslope areas and improve current conditions, initiate restoration of the scenery and recreation experience, operate and manage the road system necessary to provide access, and capture the value of fire-killed trees in order to obtain revenue for restoration activities. These actions are required to reduce the risk of uncharacteristic wildfire effects and to establish forest vegetation to restore the old forest dependent wildlife habitats.

DATES: Comments concerning the scope and implementation of this proposal should be received by April 8, 2002.

ADDRESSES: Send written comments to Karen Jones, Red Star Restoration Project Leader, Tahoe National Forest, 22830 Foresthill Rd, Foresthill, CA 95631 or e-mail to: *karenjones@fs.fed.us.*

FOR FURTHER INFORMATION CONTACT: Questions and comments about this EIS should be directed to Karen Jones, at the above address, or call her at 530–367–2224.

SUPPLEMENTARY INFORMATION: Approximately 4,363 acres of the 9,478 acres that burned on the Star Fire within the Tahoe National Forest are within the Duncan Canyon Inventoried Roadless Area (IRA). The goal of this project is to maintain the existing un-roaded character within the Duncan Canyon IRA and reduce fire-killed fuel accumulations utilizing helicopter-yarding systems.

The Tahoe National Forest Land and Resource Management Plan (1990) and the Sierra Nevada Framework Plan Amendment (2001) identifies the desired land allocations for this area as Inventoried Roadless Area (4,363 acres), California spotted owl Protected Activity Centers (PACs) (1,120 acres), Northern goshawk PACs (730 acres), Old Forest Emphasis Areas (7,618 acres), Home Range Core Areas (2,145 acres), Defense Zone (316 acres), Threat Zone (1,985 acres), and General Forest (224 acres). Many of the acres overlap due to shared allocations. Each allocation has a set of standards and guidelines that determine how management would proceed within the allocation. The proposed action is designed to be consistent with the 1990 Tahoe National Forest Land and Resource Management Plan as amended by the Sierra Nevada Forest Plan Amendment Record of Decision.

The Interdisciplinary Team has defined fire-killed trees as trees that have dead (black or brown) crowns. This approach was used to ensure that only dead, fire-killed trees would be considered for removal. Approximately 3,700 acres of trees are dead. Stands that meet the stand replacement criteria are areas with greater than 75% mortality based on stand basal area and considered in the proposed action. Based on field inventories conducted in the fall of 2001, stand replacement is predicted to occur during the next 1–3 years on an additional 4,000 acres. These acres would be monitored and no burned trees would be removed until the stand meets the stand replacement criteria and the fire-killed definition (dead-crown criteria) mentioned above.

The proposed action is to:

1. Cut and remove dead materials greater than one-inch diameter at breast height (dbh) that is excess to the desired condition for fuels reduction, wildlife retention, and other resource needs. Remove commercial material and ground-based equipment on approximately 382 acres; with skyline yarding systems on approximately 305 acres; and by helicopter yarding systems on approximately 2,417 acres. Approximately 1,033 acres of those proposed for helicopter yarding lie within the Duncan Canyon IRA. An additional 1,060 acres of mechanical fuel treatment (piling, hand felling and piling, crushing, mastication) of smaller diameter material is proposed.

2. Reforest conifer stand with greater than 75 percent mortality by planting approximately 3,369 acres of conifer seedlings.

3. Provide soil cover by lopping and scattering limbs and tops of fire-killed trees that are removed.

4. Exclude the removal of fire-killed trees from within 50 feet of the apparent high water mark of perennial streams and within 25 feet of seasonally flowing streams. Outside of these limits, but within the Riparian Conservation Area (RCA) boundaries, remove fire-killed trees by helicopter yarding.

5. Cut and remove imminent hazard trees along approximately 11 to 13 miles of the Western States and Tevis Cup Trails.

6. Perform maintenance and repairs on 44 (about 52 miles) of NFS roads. Decommission approximately 11 miles of 22 National Forest System roads after fire restoration work. Three of the roads (for approximately 1.2 miles) are within the Duncan Canyon IRA.

The decision to be made is whether to implement fuel reduction treatments to restore desirable characteristics of the ecosystem composition and structure (Old Forest characteristics) as proposed or to take no action. Alternatives to this proposal would be developed based on significant issues identified during the scoping process for the environmental impact statement. Alternatives being considered at this time include: (1) No Action and (2) the Proposed Action.

Public participation is important during the analysis. The Forest Service will be seeking information, comments, and assistance from the Federal, State, and local agencies and other individuals or organizations that may be interested in or affected by the proposed action. To facilitate public participation, information about the proposed action is being mailed to all who have expressed interest in the proposed action based on publication in the Tahoe National Forest Quarterly Schedule of Proposed Actions and by notifying the public during the scoping period by publishing a notice in the Auburn Journal, Auburn, CA and The Union, Grass Valley, CA.

Comments submitted during the scoping process should be in writing, and should be specific to the proposed action. The comments should describe as clearly and completely as possible any issues the commenter has with the proposal. The scoping process includes:

(a) Identifying potential issues;

(b) Identifying issues to be analyzed in depth;

(c) Eliminating non-significant issues or those previously covered by a relevant previous environmental analysis;

(d) Exploring additional alternatives;

(e) Identifying potential environmental effects of the proposed action and alternatives.

The draft EIS is expected to be filed with the Environmental Protection Agency (EPA) and to be available for public review by April 2002. EPA will publish a notice of availability of the draft EIS in the **Federal Register**. The comment period on the draft EIS will be 45 days from the date the EPA notice appears in the **Federal Register**. At that time, copies of the draft EIS will be distributed to interested and affected agencies, organizations, and members of the public for their review and comment. It is very important that those interested in the management of the Tahoe National Forest participate at that time.

The Forest Service believes it is important to give reviewers notice at

this early stage of several court rulings related to public participation in the environmental review process. First, reviewers of a draft EIS must structure their participation in the environmental review of the proposal so that it is meaningful and alerts an agency to the reviewer's position and contentions, *Vermont Yankee Nuclear Power Corp.* v. *NRDC, 435 U.S. 519, 553 (1978).* Also, environmental objections that could be raised at the draft EIS stage, but that are not raised until after completion of the final EIS may be waived or dismissed by the courts, *City of Angoon* v. *Hodel, 803f, 2d 1016, 1022 (9th Cir, 1986)* and *Wisconsin Heritages, Inc.* v. *Harris, 490 F. Supp. 1334, 1338 (E.D. Wis. 1980).* Because of these court rulings, it is very important that those interested in this proposed action participate by the close of the comment period so that substantive comments and objections are made available to the Forest Service at a time when it can meaningfully consider them and respond to them in the final EIS.

To assist the Forest Service in identifying and considering issues and concerns on the proposed action, comments on the proposed action should be as specific as possible. It is also helpful if comments refer to specific pages or chapters of the proposed action. Comments may also address the adequacy of the proposed action or the merits of the alternatives formulated and discussed in the statement. (Reviewers may wish to refer to the Council on Environmental Quality Regulations for implementing the procedural provisions of the National Environmental Policy Act at 40 CFR 1503.3 in addressing these points).

The final EIS would be completed in July 2002. In the final EIS, the Forest Service is required to respond to substantive comments received during the comment period that pertain to the environmental consequences discussed in the draft EIS and applicable laws, regulations, and policies considered in making the decision regarding this proposal.

Steven T. Eubanks, Forest Supervisor, Tahoe National Forest is the responsible official. As the responsible official he will document the decision and reasons for the decision in the Record of Decision. That decision will be subject to Forest Service appeal regulations (36 CFR part 215).

Dated: March 5, 2002.

Steven T. Eubanks,

Forest Supervisor.

[FR Doc. 02–5773 Filed 3–8–02; 8:45 am]

BILLING CODE 3410–11–M

DEPARTMENT OF AGRICULTURE

Forest Service

Colville Resource Advisory Committee (RAC); Meeting

AGENCY: Forest Service, USDA.

ACTION: Notice of meeting.

SUMMARY: The Colville Resource Advisory Council will meet on Thursday, March 21, 2002 at the Spokane Community College, Colville Campus Room 107 at 985 S. Elm Street, Colville, Washington. The meeting will begin at 9 a.m. and conclude at 4 p.m.

Agenda items include: (1) Review, modify and approve minutes from February meeting; (2) review and recommend Title II Projects to be submitted to the forest designated official; (3) review and approve the RAC Communication Plan; and (4) develop agenda for next meeting.

FOR FURTHER INFORMATION CONTACT: Direct questions regarding this meeting to designated federal official, Nora Rasure or Cynthia Reichelt, Public Affairs Officer, Colville National Forest, 765 S. Main, Colville, Washington 99114, (509) 684–7000.

Dated: March 1, 2002.

Nora B. Rasure,

Forrest Supervisor.

[FR Doc. 02–5700 Filed 3–8–02; 8:45 am]

BILLING CODE 3410–11–M

DEPARTMENT OF AGRICULTURE

Forest Service

Siskiyou County Resource Advisory Committee

AGENCY: Forest Service, USDA.

ACTION: Notice of meeting.

SUMMARY: The Siskiyou County Resource Advisory Committee (RAC) will meet on March 18, 2002, in Yreka, California. The purpose of the meeting is to discuss the following topics: Contracts, implementation on private lands versus public; Develop a tool for feedback to applicants; Invited back proponents, presentation or/and site visits; Non-approved or multi-year projects; Develop a progress report for dollars allocated; Decide funding mechanism; Monitoring design; and Overhead Rate.

March 25, 2002 meeting will be review and rating of local proposals.

DATES: The meetings will be held March 18, 2002 from 3 p.m. to 6 p.m. and March 25, 2002 from 9 a.m. to 3 p.m.

ADDRESSES: The meeting will be held at the Miners Inn and Convention Center, 122 E. Miner Street, Yreka, California.

FOR FURTHER INFORMATION CONTACT: Heidi Perry, Meeting Coordinator, USDA, Klamath National Forest, 1312 Fairlane Road, Yreka, California 96097, (530) 841–4468; e-mail: *hperry@fs.fed.us.*

SUPPLEMENTARY INFORMATION: Agenda items to be covered include: (1) Roles and Responsibilities for Advisory Committees; (2) Critic Public Proposal Workshop; (3) Project Submittal Process; (4) Project Timelines and (5) Public Comment. The meeting is open to the public. Public input opportunity will be provided and individuals will have the opportunity to address the Committee at that time.

Dated: March 5, 2002.

Margaret J. Boland,

Forest Supervisor.

[FR Doc. 02–5701 Filed 3–8–02; 8:45 am]

BILLING CODE 3410–11–M

DEPARTMENT OF AGRICULTURE

Forest Service

Central Idaho Resource Advisory Committee, Salmon-Challis National Forest, Butte, Custer, and Lemhi Counties, ID

AGENCY: Forest Service, USDA.

ACTION: Notice of meeting of the Resource Advisory Committee.

SUMMARY: The Central Idaho Resource Advisory Committee will meet at 1 p.m., March 20, 2002 at the Custer County Courthouse, 4th and Main, Challis, Idaho.

The 15-member committee will establish procedures for evaluating proposed projects and for recommending projects to the Salmon-Challis National Forest. The committee will also discuss individual project proposals for 2002. The meeting is open to the public and time will be scheduled for public comments.

The Central Idaho Resource Advisory Committee was established by the Secretary of Agriculture under Title II of the Secure Rural Schools and Community Self-Determination Act of 2000 to work collaboratively with the Salmon-Challis National Forest to provide advice and recommendations consistent with the purposes of the Act.

George P. Matejko,

Forest Supervisor, Salmon-Challis National Forest, Designated Federal Official.

[FR Doc. 02–5774 Filed 3–8–02; 8:45 am]

BILLING CODE 3410–11–M

DEPARTMENT OF AGRICULTURE

Natural Resources Conservation Service

Shammack Creek Watershed, Kemper County, MS

AGENCY: Natural Resources Conservation Service.

ACTION: Notice of a finding of no significant impact.

SUMMARY: Pursuant to section 102(2) (C) of the National Environmental Policy Act of 1969; the Council on Environmental Quality Regulations (40 CFR part 1500); and the Natural Resources Conservation Service Regulations (7 CFR part 650); the Natural Resources Conservation Service, U.S. Department of Agriculture, gives notice that an environmental impact statement is not being prepared for Shammack Creek Watershed, Kemper County, Mississippi.

FOR FURTHER INFORMATION CONTACT: Homer L. Wilkes, State Conservationist, Natural Resources Conservation Service, Suite 1321, A.H. McCoy Federal Building, 100 West Capitol Street, Jackson, Mississippi 39269, telephone 601–965–5205.

SUPPLEMENTARY INFORMATION: The environmental assessment of this Federal assisted action indicates that the project will not cause significant local, regional, or national impacts on the environment. As a result of these findings, Homer L. Wilkes, State Conservationist has determined that the preparation and review of an environmental impact statement are not needed for this project.

The project concerns a watershed plan to provide supplemental flood protection and reduce threat to loss of life from sudden dam failure to the residents of the Shammack Creek Watershed and others. The planned works of improvement consists of rehabilitating floodwater retarding structure (FWRS) No. 2. The Notice of a Finding of No Significant Impact (FONSI) has been forwarded to the Environmental Protection Agency and to various Federal, State, and local agencies and interested parties. A limited number of copies of the FONSI are available to fill single copy requests at the above address. Basic data developed during the environmental assessment are on file and may be reviewed by contacting Homer L. Wilkes. No administrative action on implementation of the proposal will be taken until 30 days after the date of this publication in the **Federal Register**.

(This activity is listed in the Catalog of Federal Domestic Assistance under No. 10.904—Watershed Protection and Flood Prevention and is subject to the provisions of Executive Order 12372 which requires intergovernmental consultation with State and local officials.)

Dated: February 11, 2002.

Homer L. Wilkes,

State Conservationist.

[FR Doc. 02–5752 Filed 3–8–02; 8:45 am]

BILLING CODE 3410–16–P

DEPARTMENT OF AGRICULTURE

Rural Utilities Service

East Kentucky Power Association; Notice of Finding of No Significant Impact

AGENCY: Rural Utilities Service, USDA.

ACTION: Notice of finding of no significant impact.

SUMMARY: Notice is hereby given that the Rural Utilities Service (RUS) has made a finding of no significant impact with respect to the construction and operation of two, 268 megawatt coal-fired electric generation units in Mason County, Kentucky. East Kentucky Power Association proposes to construct and operate the units. The Rural Utilities Service (RUS) may provide financing for the two units.

FOR FURTHER INFORMATION CONTACT: Bob Quigel, Environmental Protection Specialist, Engineering and Environmental Staff, RUS, Stop 1571, 1400 Independence Avenue, SW, Washington, DC 20250–1571, telephone (202) 720–0468, e-mail at *bquigel@rus.usda.gov.*

SUPPLEMENTARY INFORMATION: East Kentucky Power Cooperative proposes to construct two, 268-megawatt coal fired electric generation units at its Spurlock Station in Maysville, Kentucky. Maysville is located in Mason County along the Ohio River. The two new generation units are to be named Gilbert Units 3 and 4. The units would consist of two circulating fluidized bed boilers, two turbine-generators, two baghouses, two sulfur dioxide removal systems, two selective non-catalytic reduction units, and two 720-foot stacks. The project would also include a double-circuit 345-kilovolt transmission line from the Spurlock Station to an existing 345-kV transmission line in Brown County, Ohio. The length of the transmission line would be approximately 3.5 miles and would parallel an existing 138 kV transmission line that crosses the Ohio River. Further details of the project are provided in the environmental assessment.

Copies of the Finding of No Significant Impact are available from RUS at the address provided herein or from Mr. Bob Hughes of East Kentucky Power Association, P.O. Box 707, Winchester, Kentucky 40391; telephone (859) 744–4812 Mr. Hughes's e-mail address is *bobh@ekpc.com.* Copies of the environmental assessment are available for review at East Kentucky Power Association and RUS at the addresses provided herein.

Dated: March 4, 2002.

Blaine D. Stockton,

Assistant Administrator, Electric Program, Rural Utilities Service.

[FR Doc. 02–5685 Filed 3–8–02; 8:45 am]

BILLING CODE 3410–15–P

DEPARTMENT OF AGRICULTURE

Rural Utilities Service

Georgia Transmission Corporation; Notice of Finding of No Significant Impact

AGENCY: Rural Utilities Service, USDA.

ACTION: Notice of finding of no significant impact.

SUMMARY: Notice is hereby given that the Rural Utilities Service (RUS) has made a finding of no significant impact (FONSI) with respect to a request from Georgia Transmission Corporation for assistance from the RUS to finance the construction of a 230/115 kV transmission line in Gwinnett and Hall Counties, Georgia.

FOR FURTHER INFORMATION CONTACT: Bob Quigel, Environmental Protection Specialist, Engineering and Environmental Staff, RUS, Stop 1571, 1400 Independence Avenue, SW., Washington, DC 20250–1571, telephone (202) 720–0468, fax (202) 720–0820, e-mail at *bquigel@rus.usda.gov.*

SUPPLEMENTARY INFORMATION: Georgia Transmission Corporation proposes to construct a 230 kV electric transmission line from the Spout Springs Road Substation to be located in Hall County 2000 feet East of the intersection of Williams Road and Spout Springs Road, and traverse southwest paralleling an existing Georgia Power Company 500 kV transmission line for approximately 4 miles. Approximately ½ mile of this line will deviate from the existing right-of-way to minimize impacts to local residences. The right-of-way for this portion of the transmission line will be widened 100 feet. At about ½ mile southwest of Hamilton Mill Road in Gwinnett County the transmission line

will turn to the northwest on an existing Georgia Power Company 115 kV transmission line right-of-way for approximately 5 miles. The existing 115 kV transmission line will be reconstructed as an underbuild of the 230 kV transmission line. (The 230 kV and 115 kV transmission lines would share the same transmission line support structures.) The existing right-of-way will not need to be widened. The transmission line would then turn to the southwest on a new right-of-way along Peachtree Industrial Boulevard for approximately 1.6 miles to the Shoal Creek Substation to be located in Gwinnett County southwest of the intersection of Tuggle Greer Road and Peachtree Industrial Boulevard. (Georgia Power Company will construct the Shoal Creek Substation.) The new right-of-way will be forty (40) feet in width. This portion of the transmission line will also be underbuilt with a 115 kV transmission line. Both the 230 kV and the 115 kV transmission lines will connect to the Shoal Creek Substation. The portion of the 230 kV transmission line to parallel the 500 kV transmission line will be supported by single pole concrete structures. The 230 kV portion of the transmission line to be underbuilt with the 115 kV transmission line will be supported by single pole steel or concrete structures. It is anticipated that the transmission lines will be completed and energized by May 2003.

Copies of the FONSI are available for review at, or can be obtained from, RUS at the address provided herein or from Ms. Wende Martin, Georgia Transmission Corporation, 2100 East Exchange Place, Tucker, Georgia 30085–2088, telephone (770) 270–7591. Ms. Martin's e-mail address is *wende.martin@gatrans.com.*

Dated: March 5, 2002.

Blaine D. Stockton,

Assistant Administrator, Electric Program, Rural Utilities Service.

[FR Doc. 02–5734 Filed 3–8–02; 8:45 am]

BILLING CODE 3410–15–P

DEPARTMENT OF AGRICULTURE

Rural Utilities Service

Distance Learning and Telemedicine Loan and Grant Program

AGENCY: Rural Utilities Service, USDA.

ACTION: Notice of application filing deadline.

SUMMARY: The Rural Utilities Service (RUS) announces its Distance Learning and Telemedicine Program application window for funding during fiscal year (FY) 2002. For FY 2002, $27 million in grants and $300 million in loans will be made available for distance learning and telemedicine projects serving rural America. The funding will be provided in three categories: (1) $17 million will be available for grants; (2) $200 million will be available for loans; and (3) $110 million will be available for combination grants and loans ($100 million in loans paired with $10 million in grants, *i.e.,* $10 loan: $1 grant ratio).

DATES: Applications for grants must be postmarked no later than May 13, 2002. Applications for FY 2002 loans or combination loans and grants may be submitted at anytime up to August 31, 2002, and will be processed on a first-come, first serve basis.

ADDRESSES: Applications are to be submitted to the Rural Utilities Service, U.S. Department of Agriculture, 1400 Independence Avenue, SW., STOP 1550, Washington, DC 20250–1550. Applications should be marked ''Attention: Director, Advanced Services Division, Telecommunications Program.''

FOR FURTHER INFORMATION CONTACT: Marilyn J. Morgan, Branch Chief, Distance Learning and Telemedicine Branch, U.S. Department of Agriculture, Rural Utilities Service, STOP 1550, Room 2838, South Building, 1400 Independence Avenue, SW., Washington, DC 20250–1550. Telephone: (202) 720–0413, FAX: (202) 720–1051.

SUPPLEMENTARY INFORMATION: For FY 2002, $17 million in grants, a combination of $10 million in grants paired with $100 million in loans, and $200 million in loans will be made available for distance learning and telemedicine projects. RUS encourages early submission of grant applications to determine whether all required items specified in 7 CFR 1703.125 are clearly in form, identifiable, and complete. RUS will examine, provide comment, and return applications that include items that would disqualify them from further consideration for modification if they are submitted by Friday, April 12, 2002. All applications for grants must be postmarked no later than Monday, May 13, 2002, to be eligible for FY 2002 grant funding. Each application will be reviewed for completeness in accordance with 7 CFR part 1703, subparts D, E, F, and G. Ineligible applications will be returned within 15 working days of receipt.

Notice is hereby given that under 7 CFR 1703.124, 1703.133, and 1703.143, RUS has determined the maximum amount of an application for a grant that will be considered for funding in FY 2002 as $500,000. The maximum amount for a loan, generally, that will be considered for funding in FY 2002 is $10 million. However, RUS may fund a project greater than $10 million subject to the project's feasibility and the availability of loan funds.

Applications for financial assistance must be submitted in accordance with 7 CFR part 1703, subparts D, E, F, and G, which establish the policies and procedures for submitting an application for financial assistance. These subparts and an application guide to assist in the preparation of applications are available on the Internet at the following address: *http://www.usda.gov/rus/telecom/dlt/dltpublications.htm.* Application guides may also be requested from RUS by contacting the Distance Learning and Telemedicine Branch, USDA–RUS, Phone: (202) 720–0413.

Dated: March 4, 2002.

Hilda Gay Legg,

Administrator, Rural Utilities Service.

[FR Doc. 02–5732 Filed 3–8–02; 8:45 am]

BILLING CODE 3410–15–P

DEPARTMENT OF COMMERCE

Bureau of Export Administration

Action Affecting Export Privileges; Infocom Corporation, Inc., Tetrabal Corporation, Ihsan Medhat ''Sammy'' Elashi, Also Known as I. Ash and Haydee Herrera and Doing Business as Kayali Corp.; Abdulah Al Nasser, Maysson Al Kayali, Mynet. Net Corp. Bayan Medhat Elashi, Ghassan Elashi, Basman Medhat Elashi, Hazim Elashi, Fadwa Elafrangi; Renewal of Order Temporarily Denying Export Privileges

In the Matter of: Infocom Corporation, Inc., 630 International Parkway, Suite 100, Richardson, Texas 75081; Tetrabal Corporation, Inc., 605 Trail Lake Drive, Richardson, Texas 75081, and 908 Audelia Road, Suite 200, PMB #245, Richardson, Texas 75081, and Ihsan Medhat ''Sammy'' Elashi also known as: I. Ash and Haydee Herrera, and doing business as Kayali Corp., 605 Trail Lake Drive, Richardson, Texas 75081 and 908 Audelia Road, Suite 200, PMB #245, Richardson, Texas 75081; Respondents Abdulah Al Nasser, 605 Trail Lake Drive, Richardson, Texas 75081 and 908 Audelia Road, Suite 200, PMB #245, Richardson, Texas 75081; Maysoon Al Kayali, 605 Trail Lake Drive, Richardson, Texas 75081 and 908 Audelia Road, Suite 200, PMB #245, Richardson, Texas 75081; Mynet.Net Corp, Richardson, Texas 75081 and 908 Audelia Road, Suite 200, PMB #245, Richardson, Texas 75081; Bayan Medhat Elashi, 1810 Auburn, Richardson, Texas 75081; Ghassan Elashi, 304 Town House Lane, Richardson, Texas 75081; Basman Medhat Elashi, 1506

Willow Crest Drive, Richardson, Texas 75081; Hazim Elashi, 937 Stone Trail Drive, Plano, Texas 75023; Fadwa Elafrangi, 306 Town House Lane, Richardson, Texas 75081; Related persons.

Through the Office of Export Enforcement (''OEE''), the Bureau of Export Administration (''BXA''), United States Department of Commerce, has asked me to renew and modify the order pursuant to Section 766.24 of the Export Administration Regulations (currently codified at 15 CFR parts 730–774 (2001)) (''EAR'' or ''Regulations''),[1] temporarily denying all United States export privileges to Infocom Corporation, Inc., 630 International Parkway, Suite 100, Richardson, Texas 75081 (''Infocom'') that was issued on September 6, 2001.[2] BXA has asked that I modify the order by naming Tetrabal Corporation, Inc. (''Tetrabal'') and Ihsan Medhat ''Sammy'' Elashi (''Ihsan Elashi'') as respondents rather than related persons, and that I list modified addresses and aliases as set out in the caption of this order. Further, BXA has asked that I add the following related persons: Abdulah Al Nasser; Maysoon Al Kayali; and Mynet.Net Corp, all with addreses at: 605 Trail Lake Drive, Richardson, Texas 75081 and 908 Audelia Road, Suite 200, PMB #245, Richardson, Texas 75081.

In its request, BXA states that, based upon the evidence previously adduced and the continuing investigation by OEE, BXA believes that Infocom, Tetrabal, and Ihsan Elashi have violated the Regulations by shipping and attempting to ship goods to Libya and Syria without obtaining the necessary authorizations from BXA and further violated the Regulations by shipping goods in violation of the original denial order. Since the September 6 order, Ihsan Elashi has made at least 10 exports of computer equipment that violated the order. Abdulah Al Nasser and Maysoon Al Kayali assisted Ihsan Elashi in making some of these exports in violation of the denial order. Additionally, Ihsan Elashi used Mynet.net as the exporter for at least one of the shipments. In several of these exports, Ihsan Elashi used concealment and subterfuge to attempt to conceal his exports which violated the terms of the September 6 order.

The Assistant Secretary for Export Enforcement previously found the TDO was consistent with the public interest to preclude future violations of the Regulations. I find that the need for the TDO continues. The evidence that Infocom commited repeated violations of the Regulations that were deliberate and covert, that it actively sought to engage in further export transacitons, that, given the nature of the items shipped, future violations could go undetected makes it necessary to give notice to companies in the United States and abroad that they should cease dealing with the respondents in export transactions involving U.S.-origin items, and that Infocom has continued doing business with Ihsan Elashi and Tetrabal. The need for the continuation of the TDO and the naming of Ihsan Elashi and Tetrabal as denied persons is also established by the flagrant violations of the order that have ocurred more recently. A TDO that also names Ihsan Elashi and Tetrabal is clearly consistent with the public interest to preclude future violations of the Regulations.

Accordingly, I am renewing this order with the amendments requested by BXA because I have concluded that a TDO is necessary, in the public interest, to prevent an imminent violation of the Regulations.

It is therefore ordered: First, that Infocom Corporation, Inc., 630 International Parkway, Suite 100, Richardson, Texas 75081, Tetrabal Corporation, Inc., 605 Trail Lake Drive, Richardson, Texas 75081 and 908 Audelia Road, Suite 200, PMB #245, Richardson, Texas 75081, and Ihsan Medhat ''Sammy'' Elashi, also known as I. Ash and Haydee Herrera, same addresses as Tetrabal, (collectively, ''the denied persons'') and the following persons subject to the order by their relationship to the denied person Bayan Medhat Elashi, 810 Auburn, Richardson, Texas 75081; Ghassan Elashi, 304 Town House Lane, Richardson, Texas 75081; Basman Medhat Elashi, 1506 Willow Crest Drive, Richardson, Texas 75081; Hazim Elashi, 937 Stone Trail Drive, Plano, Texas 75023; Fadwa Elafrangi; 306 Town House Lane; Richardson, Texas 75081, and Abdulah Al Nasser, Maysoon Al Kayali, and Mynet.net Corp, all three at the same addresses as Tetrabal, (''the related persons'') (together, the denied person and the related persons are ''persons subject to this order'') may not, directly or indirectly, participate in any way in any transaction involving any commodity, software or technology (hereinafter collectively referred to as ''item'') exported or to be exported from the United States that is subject to the Export Administration Regulations (EAR), or in any other activity subject to the EAR, including, but not limited to:

A. Applying for, obtaining, or using any license, License Exception, or export control document;

B. Carrying on negotiations concerning, or ordering, buying, receiving, using, selling, delivering, storing, disposing of, forwarding, transporting, financing, or otherwise servicing in any way, any transaction involving any item exported or to be exported from the United States that is subject to the EAR, or in any other activity subject to the EAR; or

C. Benefiting in any way from any transaction involving any item exported or to be exported from the United States that is subject to the EAR, or in any other activity subject to the EAR.

Second, that no person may, directly or indirectly, do any of the following:

A. Export or reexport to or on behalf of a person subject to this order any item subject to the EAR;

B. Take any action that facilities the acquisition or attempted acquisition by a person subject to this order of the ownership, possession, or control of any item subject to the EAR that has been or will be exported from the United States, including financing or other support activities related to a transaction whereby a person subject to this order acquires or attempts to acquire such ownership, possession or control;

C. Take any action to acquire from or to facilitate the acquisition or attempted acquisition from a person subject to this order of any item subject to the EAR that has been exported from the United States;

D. Obtain from a person subject to this order in the United States any item subject to the EAR with knowledge or reason to know that the item will be, or is intended to be, exported from the United States; or

E. Engage in any transaction to service any item subject to the EAR that has been or will be exported from the United States and which is owned,

[1] The Regulations were issued pursuant to the Export Administration Act of 1979 (''Act''), 50 U.S.C. app. sections 2401–2420 (1994 & Supp. IV 1998), as reauthorized by Act of November 13, 2000, Pub. L. 106–508, 114 Stat. 2360. The Act lapsed on August 20, 2001. Pursuant to the International Emergency Economic Powers Act (50 U.S.C. 1701–1706 (1994 & Supp. IV 1998)), the President, through Executive Order 13222 of August 17, 2001 (66 FR 44025 (August 22, 2001)), has continued the Regulations in force.

[2] On February 27, 2002, Counsel for Infocom filed Opposition of Infocom Corporation, Inc., Bayan Medhat Elashi, Ghassan Elashi and Basman Medhat Elashi (''The Three Brothers'') to Renewal of Order Temporarily Denying Export Privileges. On March 1, 2002, counsel for OEE filed ''Response to Opposition of Infocom Corporation, Inc, *et al.* to Renewal Order Temporarily Denying Export Privileges (TDO)'' (''OEE Response''). The OEE Response argues that The Three Brothers lack standing because they are ''Related Persons'' in the September 6th Order and, as such, may not oppose Renewal of the Order. OEE cites § 766.2(3)(c) of the EAR as authority for its position. I find the arguments raised by OEE on this issue, both in its pleadings and at oral argument, to be persuasive. Only Infocom has standing to oppose Renewal of the TDO.

possessed or controlled by a person subject to this order, or service any item, of whatever origin, that is owned, possessed or controlled by a person subject to this order if such service involves the use of any item subject to the EAR that has been or will be exported from the United States. For purposes of this paragraph, servicing means installation, maintenance, repair, modification or testing.

Third, that, in addition to the related persons named above, after notice and opportunity for comment as provided in section 766.23 of the EAR, any other person, firm, corporation, or business organization related to the denied person by affiliation, ownership, control, or position of responsibility in the conduct of trade or related services may also be made subject to the provisions of this order.

Fourth, that this order does not prohibit any export, reexport, or other transaction subject to the EAR where the only items involved that are subject to the EAR are the foreign-produced direct product of U.S.-origin technology.

In accordance with the provisions of Section 766.24(e) of the Regulations, Infocom, Tetrabal, or Ihsan Elashi may, at any time, appeal this Order by filing a full written statement in support of the appeal with the Office of the Administrative Law Judge, U.S. Coast Guard ALJ Docketing Center, 40 South Gay Street, Baltimore, Maryland 21202–4022. A related person may appeal to the Administrative Law Judge at the aforesaid address in accordance with the provisions of Section 766.23(c) of the Regulations.

This Order is effective on March 4, 2002 and shall remain in effect for 180 days.

In accordance with the provisions of Section 766.24(d) of the Regulations, BXA may seek renewal of this Order by filing a written request not later than 20 days before the expiration date. Infocom, Tetrabal, or Ihsan Elashi may oppose a request to renew this Order by filing a written submission with the Assistant Secretary for Export Enforcement, which must be received not later than seven days before the expiration date of the Order.

A copy of this Order shall be served on Infocom, Tetrabal, and Ihsan Elashi and each related person and shall be published in the **Federal Register.**

Entered this 4th day of March, 2002.

Lisa A. Prager,

Acting Assistant Secretary for Export Enforcement.

[FR Doc. 02–5676 Filed 3–8–02; 8:45 am]

BILLING CODE 3510–DT–M

DEPARTMENT OF COMMERCE

International Trade Administration

[A–570–852]

Creatine Monohydrate From the People's Republic of China; Final Results of Antidumping Duty Review

AGENCY: Import Administration, International Trade Administration, Department of Commerce.

ACTION: Notice of final results of antidumping duty review.

SUMMARY: On November 6, 2001, the Department of Commerce published the preliminary results of the administrative review of the antidumping duty order on creatine monohydrate from the People's Republic of China. We gave interested parties an opportunity to comment. Based upon our analysis of the comments and information received, we have made changes to the margin calculations presented in the final results of the review. We find that creatine monohydrate from the People's Republic of China was not sold in the United States below normal value.

EFFECTIVE DATE: March 11, 2002.

FOR FURTHER INFORMATION CONTACT: Blanche Ziv, Import Administration, International Trade Administration, U.S. Department of Commerce, 14th and Constitution Avenue, NW., Washington, DC 20230; telephone (202) 482–4207.

SUPPLEMENTARY INFORMATION:

The Applicable Statute

Unless otherwise indicated, all citations to the Tariff Act of 1930, as amended (''the Act''), are references to the provisions effective January 1, 1995, the effective date of the amendments made to the Act by the Uruguay Round Agreements Act. In addition, unless otherwise indicated, all citations to the Department of Commerce's (''the Department'') regulations are to 19 CFR part 351 (2000).

Background

On November 6, 2001, the Department published in the **Federal Register** the preliminary results of its administrative review of creatine monohydrate (''creatine'') from the People's Republic of China (''PRC'') (*Creatine Monohydrate from the People's Republic of China; Preliminary Results of Antidumping Duty Administrative Review,* 66 FR 56054 (November 6, 2001) (''*Preliminary Results*''). We received a case brief from the respondent, Blue Science International Trading (Shanghai) Co., Ltd. (''Blue Science''), on December 6, 2001. The petitioners did not submit a case brief.

The Department has now completed the antidumping duty administrative review in accordance with section 751 of the Act.

Scope of Order

The product covered by this order is creatine monohydrate, which is commonly referred to as ''creatine.'' The chemical name for creatine monohydrate is N-(aminoiminomethyl)-N-methylglycine monohydrate. The Chemical Abstracts Service (''CAS'') registry number for this product is 6020–87–7. Creatine monohydrate in its pure form is a white, tasteless, odorless powder, that is a naturally occurring metabolite found in muscle tissue. Creatine monohydrate is provided for in subheading 2925.20.90 of the Harmonized Tariff Schedule of the United States (''HTSUS''). Although the HTSUS subheading and the CAS registry number are provided for convenience and customs purposes, the written description of the scope of this proceeding is dispositive.

Period of Review

The period of review (''POR'') is from July 30, 1999 through January 31, 2001.

Comparisons

We calculated export price and normal value based on the same methodology used in the *Preliminary Results* with the following exceptions:

- We have valued certain inputs using domestic prices in India rather than import prices;
- We have corrected a ministerial error made in valuing one input.

Analysis of Comments Received

All issues raised in Blue Science's case brief are addressed in the March 6, 2002, Issues and Decision Memorandum (''Decision Memorandum'') which is hereby adopted by this notice. Attached to this notice as an appendix is a list of the issues which Blue Science has raised and to which we have responded in the Decision Memorandum. Parties can find a complete discussion of all issues raised in this review and the corresponding recommendations in this public memorandum which is on file in the Central Records Unit, Room B–099 of the Department. In addition, a complete version of the Decision Memorandum can be accessed directly on the Web at *http://ia.ita.doc.gov/frn/summary/list.htm.* The paper copy and electronic version of the Decision Memorandum are identical in content.

Final Results of the Review

We will instruct the Customs Service to liquidate entries of the subject

merchandise from Blue Science during the period July 30, 1999 through January 31, 2001 without regard to antidumping duties. All other entries of the subject merchandise during the POR will be liquidated at the antidumping rate in place at the time of entry.

Furthermore, the following deposit rates will be effective upon publication of these final results for all shipments of creatine from the PRC entered, or withdrawn from warehouse, for consumption on or after the publication date, as provided for by section 751(a)(1) of the Act: (1) For Blue Science, which has a separate rate, no antidumping duty deposit will be required; (2) for a company previously found to be entitled to a separate rate and for which no review was requested, the cash deposit rate will be the rate established in the most recent review of that company; (3) for all other PRC exporters the cash deposit rate will be 128.63 percent, the PRC-wide rate established in the less than fair value (''LTFV'') investigation; and (4) for non-PRC exporters of subject merchandise from the PRC, the cash deposit rate will be the rate applicable to the PRC supplier of that exporter. These deposit rates shall remain in effect until publication of the final results of the next administrative review.

This notice also serves as a final reminder to importers of their responsibility under 19 CFR 351.402(f) to file a certificate regarding the reimbursement of antidumping duties prior to liquidation of the relevant entries during this review period. Failure to comply with this requirement could result in the Secretary's presumption that reimbursement of antidumping duties occurred and the subsequent assessment of double antidumping duties.

This notice also serves as a reminder to parties subject to administrative protective order (''APO'') of their responsibility concerning the disposition of proprietary information disclosed under APO in accordance with 19 CFR 351.305(a)(3). Timely written notification of the return/destruction of APO materials or conversion to judicial protective order is hereby requested. Failure to comply with the regulations and the terms of an APO is a sanctionable violation.

This administrative review and notice are in accordance with sections 751(a)(1) and 777(i)(1) of the Act.

Dated: March 6, 2002.

Faryar Shirzad,

Assistant Secretary for Import Administration.

Appendix

List of Comments in the Issues and Decision Memorandum

Comment 1: Use of Import Prices v. Domestic Prices in India to Value Certain Inputs

Comment 2: Adjusting CIF Import Values to Remove International Freight

Comment 3: Correction of Ministerial Error

[FR Doc. 02–5777 Filed 3–8–02; 8:45 am]

BILLING CODE 3510–DR–P

DEPARTMENT OF COMMERCE

National Oceanic and Atmospheric Administration

[I.D. 030602D]

Antarctic Marine Living Resources Convention Act of 1984; Conservation and Management Measures

AGENCY: National Marine Fisheries Service (NMFS), National Oceanic and Atmospheric Administration (NOAA), Commerce.

ACTION: Final notice.

SUMMARY: At its Twentieth Meeting in Hobart, Tasmania, October 22 to November 2, 2001, the Commission for the Conservation of Antarctic Marine Living Resources (CCAMLR), of which the United States is a member, adopted conservation measures, pending members' approval, pertaining to fishing in the CCAMLR Convention Area in Antarctic waters. These have been agreed upon in accordance with Article IX of the Convention for the Conservation of Antarctic Marine Living Resources (the Convention) and are in effect with respect to the United States.

ADDRESSES: Copies of the CCAMLR measures and the framework environmental assessment may be obtained from the Assistant Administrator for Fisheries, NOAA, National Marine Fisheries Service, 1315 East-West Highway, Silver Spring, MD 20910.

FOR FURTHER INFORMATION CONTACT: Robin Tuttle, 301–713–2282.

SUPPLEMENTARY INFORMATION: See 50 CFR part 300, subpart G—Antarctic Marine Living Resources, and 67 FR 2477 (January 17, 2002).

The measures restrict overall catches and bycatch of certain species of fish, krill, squid, and crab; limit participation in several exploratory fisheries; restrict fishing in certain areas and to certain gear types; set fishing seasons; allow vessels in longline fisheries in Subarea 48.6 south of 60°S to use experimental line-weighting trials; amend and clarify the catch documentation scheme for *Dissostichus* species; amend a previously adopted measure relating to licensing and inspection obligations of Contracting Parties and cooperation between Contracting Parties; and amend a previously adopted measure on the use of automated satellite-linked vessel monitoring systems (VMS) on Contracting Party vessels fishing in the Convention Area.

In addition, the Commission adopted a resolution addressing toothfish harvests questionably attributed to FAO statistical area 51 in the Indian Ocean.

The measures and resolutions were announced by the Department of State by a preliminary notice in the **Federal Register** on January 17, 2002 (67 FR 2477). Public comments were invited, but none were received. Through this notice, NMFS notifies the public that the United States has accepted the measures adopted at CCAMLR's Twentieth meeting, and that pursuant to the Convention and 16 U.S.C. 2431 *et seq.*, these measures are in effect. For the full text of the measures adopted, see 67 FR 2477, January 17, 2002. NMFS provides the following summary of the measures as a courtesy.

The Commission adopted a uniform fishing season of December 1 through November 30 for all Convention area fisheries, except as otherwise specified, e.g., to protect Convention Area species during spawning and breeding seasons. This measure includes a change in the season for krill fishing from the July 1 to June 30 season previously adopted by the Commission.

The Commission prohibited the fishery for *Champsocephalus gunnari* in Statistical Subarea 48.3 within 12 nautical miles of the coast of South Georgia from March 1 to May 31, 2002 during the *C.gunnari* spawning period and adopted a requirement that all fishing vessels taking part in the fishery in the non-restricted area during this period conduct a minimum of 20 research hauls as set out in an annex to the *C. gunnari* conservation measure.

Participation in the Convention Area crab fishery continues to be limited to one vessel per Commission member. Applications for a crab permit must be received no later than 90 days prior to intended harvesting and will be considered in the order of application. If there are multiple applicants, the one U.S. crab permit will be issued on the basis of (1) order of receipt of applications (2) criteria for harvesting permits appearing in 50 CFR 300.112 (3) willingness to participate in CCAMLR

pilot programs and (4) record of previous participation, if any, in the crab fishery. The fishery continues to be managed as previously defined by the Commission with one amendment. The minimum legal carapace width for male *Paralomis spinosissima* was reduced from 102 mm to 94 mm.

The Commission amended the general measures for exploratory fishing for *Dissostichus* spp. to require Members who choose not to participate in an exploratory fishery prior to the commencement of the fishery to inform the Secretariat of changes in their plans no later than 1 month before the start of the fishery. If, for whatever reason, Members are unable to participate in the fishery, they shall inform the Secretariat no later than 1 week after finding that they cannot participate.

The Commission approved several fisheries as exploratory fisheries for the 2001/2002 fishing season. These fisheries are limited total allowable catch (TAC) fisheries and are open only to the flagged vessels of the countries that notified CCAMLR of an interest by participants in the fisheries. The United States was not a notifying country, and, thus, U.S. fishers are not eligible to participate in them.

The exploratory fisheries for *Dissostichus* species (toothfish) are for longline fishing in Statistical Subarea 48.6 by Japan, New Zealand, South Africa and Uruguay; trawl fishing in Statistical Division 58.4.2 by Australia; longline fishing in 58.4.3a (the Elan Bank) outside areas under national jurisdiction by France and Japan; longline fishing in Statistical Division 58.4.3b (the BANZARE Bank) by France and Japan; longline fishing in Statistical Division 58.4.4 by France, Japan, South Africa, and Uruguay; longline fishing in Statistical Subarea 58.6 by Chile, France, Japan and South Africa; longline fishing in Statistical Subarea 88.1 by Japan, New Zealand, Russia and South Africa; longline fishing in Statistical Subarea 88.2 by Japan, New Zealand and South Africa.

The Commission adopted a conservation measure for an exploratory trawl fishery for *Chaenodraco wilsoni*, *Lepidonotothen kempi*, *Trematomus eulepidotus* and *Pleuragramma antarcticum* in Statistical Division 58.4.2, limited to fishing by Australia.

The Commission adopted a conservation measure for a new trawl fishery for *Macrourus* ssp. in Statistical Division 58.4.2, limited to fishing by Australia and amended the conservation measure on the bycatch of *Macrourus* spp. and skates and rays to set upper limits on bycatch and require a vessel to move its fishing position should it catch more than one ton of bycatch species in a longline set or haul.

Although the Commission readopted the conservation measure for jig fishing for *Martialia hyadesi* (squid) in Statistical Subarea 48.3, no Member notified the Commission of its intention to fish in this fishing-by-notification-only fishery.

The Commission revised the conservation measure requiring the use of automated satellite-linked vessel monitoring in all fisheries (except the krill fishery) to require Contracting Parties to provide the Secretariat with limited positional information on movements by vessels in and out of the Convention area and between CCAMLR statistical areas, subareas and divisions. This information, available to Members by operation of the VMS requirement, must be transmitted to the Secretariat within two working days of receiving the required VMS information.

The Commission amended the conservation measure specifying aspects of cooperation among Contracting Parties requiring them to report the details of fishing licenses issued by them.

The Commission adopted a new conservation measure allowing vessels in longline fisheries in Subareas 48.6 south of 60°S to use experimental line-weighting trials in lieu of the Commission's requirement for night setting-only in Convention Area longline fisheries when a vessel can demonstrate prior to licensing its ability to fully comply with one of two trial protocols. The Commission urged two actions with respect to the enforcement of the conservation measure to minimize the incidental mortality of seabirds in the course of longline fishing or longline fishing research. The Commission recommended that vessels equipped or configured such that they are unable to comply with the measure not be allowed to fish in the Convention Area. The Commission further recommended that Members prevent vessels persistently failing to comply with the measure from fishing in the Convention Area.

The Commission revised and clarified the Dissostichus Catch Document (DCD) and created a Catch Documentation Fund (CDF) to receive voluntary contributions from the sale of seized or confiscated toothfish sold pursuant to a Specially Validated DCD (SVDCD). The DCD was revised to clarify procedures for dealing with export verification. The conservation measure creating the CDF includes the provision that, to the extent practicable, Contracting Parties shall ensure that no financial benefit arising from the sale of seized or confiscated catch of toothfish accrue to the perpetrators of illegal, unregulated or unreported fishing for toothfish. Another provision of the measure allows a Contracting Party to, consistent with its domestic legislation, decline to provide a market for toothfish offered for sale with a SVDCD by another State. The Commission also expanded and clarified the use of VMS to verify the area of toothfish harvests. Any Contracting Party, or non-Contracting Party participating in the Catch Documentation Scheme for toothfish, may now require additional verification of catch documents by Flag States by using, *inter alia*, VMS, in respect of catches taken on the high seas outside the Convention Area, when landed at, imported into or exported from its territory. The Commission recognized the need to revise the ''Guide for Completion of Catch Documents'' and requested that the Secretariat revise the Guide as agreed at the annual meeting and make it available on the CCAMLR website to all CCAMLR Members and non-Contracting Parties which have joined CCAMLR in the implementation of the CDS.

CCAMLR adopted a resolution relating to fishing in Food and Agriculture Organization (FAO) statistical area 51. The Commission, concerned that the CDS could be used to disguise IUU catches of toothfish in order to gain legal access to markets, urged States participating in the CDS to ensure that DCDs relating to landings or imports of toothfish, when necessary, are checked by contact with flag states to verify that the information in the DCD is consistent with data reports derived from an automated satellite-linked VMS. The Commission also urged States participating in the CDS, if necessary to that end, to consider reviewing their domestic laws and regulations, with a view to prohibiting, in a manner consistent with international law, landings/transhipments/imports of toothfish declared in a DCD as having been caught in FAO Statistical Area 51, if the flag state fails to demonstrate that it verified the DCD using automated satellite-linked VMS derived data reports.

Authority: 16 U.S.C. 2431 *et seq.*

Dated: March 1, 2002.

Rebecca Lent,

Deputy Assistant Administrator for Regulatory Programs, National Marine Fisheries Service.

[FR Doc. 02–5771 Filed 3–8–02; 8:45 am]

BILLING CODE 3510–22–S

DEPARTMENT OF COMMERCE

National Oceanic and Atmospheric Administration

[I.D. 022602F]

Caribbean Fishery Management Council; Public Meetings

AGENCY: National Marine Fisheries Service (NMFS), National Oceanic and Atmospheric Administration (NOAA), Commerce.

ACTION: Notice of public meetings.

SUMMARY: The Caribbean Fishery Management Council (Council) will hold meetings.

DATES: The meetings will be held on March 26–27, 2002. The Council will convene on Tuesday, March 26, 2002, from 9 a.m. to 6:30 p.m., and on Wednesday, March 27, 2002, from 9 a.m. to 5 p.m., approximately. A public comment period for Dolphin/Wahoo FMP will be open from 1:30 to 2:30 p.m., on March 26, 2002, to allow the general public and interested persons to provide their comments on the Dolphin/Wahoo Fishery Management Plan (FMP)

ADDRESSES: The meetings will be held at the Holiday Inn of Ponce and Tropical Casino, 3315 Ponce By Pass, Ponce, Puerto Rico 00731.

FOR FURTHER INFORMATION CONTACT: Caribbean Fishery Management Council, 268 Muñoz Rivera Avenue, Suite 1108, San Juan, Puerto Rico 00918–2577, telephone (787) 766–5926.

SUPPLEMENTARY INFORMATION: The Council will hold its 107th regular public meeting to discuss the items contained in the following agenda:

Call to Order

Adoption of Agenda

Consideration of 106th Council Meeting Verbatim Minutes

Executive Director's Report

Mr. Gerson Martínez Letter

Special Accommodations

These meetings are physically accessible to people with disabilities. For more information or request for sign language interpretation and other auxiliary aids, please contact Mr. Miguel A. Rolón, Executive Director, Caribbean Fishery Management Council, 268 Muñoz Rivera Avenue, Suite 1108, San Juan, Puerto Rico, 00918–2577, telephone (787) 766-5926, at least five days prior to the meeting date.

Essential Fish Habitat (EFH)

New Regulations - Rickey Reubsamen
NMFS Conservation Habitat
Caribbean Office - L.M. Carrubba

EFH Draft Environmental Impact Statement (DEIS) - MRAG Americas, Inc.

National Ocean Service Benthic Maps of the U.S. Caribbean

Final Presentation

1:30 to 2:30 p.m. - Public Comment Period Dolphin/Wahoo FMP/DEIS

Discussion and Council Decision on Dolphin/Wahoo

Administrative Committee Meeting

Queen Conch FMP Schedule

Sustainable Fisheries Act Update

Fishery Agreements - Department of State

Enforcement

Vessel Monitoring System - F. Kyle
U.S. Coast Guard
Puerto Rico
U.S. Virgin Islands
NMFS

Reeffish FMP

Hyperbaric Chamber and Diving Accidents Report - J. Figueroa
Marine Recreational Fisheries Statistical Survey-Protected Resources Statistics - L.M. Yoshiura
Regulatory Amendment

Recommendations by Administrative Committee at its March 26, 2002 Meeting

Meetings Attended by Council Members and Staff

Other Business

Navassa Island Presentation - U.S. Fish and Wildlife, Department of Interior

Next Council Meeting

The meetings are open to the public, and will be conducted in English. However, simultaneous interpretation (Spanish-English) will be available during the Council meeting on March 26-27, 2002. Fishers and other interested persons are invited to attend and participate with oral or written statements regarding agenda issues.

Although non-emergency issues not contained in this agenda may come before this group for discussion, those issues may not be the subject of formal action during this meeting. Action will be restricted to those issues specifically listed in this notice and any issues arising after publication of this notice that require emergency action under section 305 (c) of the Magnuson-Stevens Fishery Conservation and Management Act, provided the public has been notified of the Council's intent to take final action to address the emergency.

Dated: March 5, 2002.

Richard W. Surdi,

Acting Director, Office of Sustainable Fisheries, National Marine Fisheries Service.

[FR Doc. 02–5618 Filed 3–8–02; 8:45 am]

BILLING CODE 3510–22–S

COMMODITY FUTURES TRADING COMMISSION

Agency Information Collection Activities: Notice of Intent To Renew Collection 3038–0009, Large Trader Reports

AGENCY: Commodity Futures Trading Commission.

ACTION: Notice.

SUMMARY: The Community Futures Trading Commission (CFTC) is announcing an opportunity for public comment on the proposed collection of certain information by the agency. Under the Paperwork Reduction Act of 1995 (PRA), 44 U.S.C. 3501 *et seq.,* Federal agencies are required to publish notice in the **Federal Register** concerning each proposed collection of information, including each proposed extension of an existing collection of information, and to allow 60 days for public comment in response to the notice. This notice solicits comments on large trader reports.

DATES: Comments must be submitted on or before May 10, 2002.

ADDRESSES: Comments may be mailed to Judith E. Payne, Division of Economic Analysis, U.S. Commodity Futures Trading Commission, 1155 21st Street, NW, Washington, DC 20581.

FOR FURTHER INFORMATION CONTACT: Judith E. Payne, (202) 418–5268; FAX: (202) 418–5527; e-mail: *jpayne@cftc.gov*

SUPPLEMENTARY INFORMATION: Under the PRA, Federal agencies must obtain approval from the Office of Management and Budget (OMB) for each collection of information they conduct or sponsor. ''Collection of information'' is defined in 44 U.S.C. 3502(3) and 5 CFR 1320.3(c) and includes agency requests or requirements that members of the public submit reports, keep records, or provide information to a third party. Section 3506(c)(2)(A) of the PRA, 44 U.S.C. 3506(c)(2)(A), requires Federal agencies to provide a 60-day notice in the **Federal Register** concerning each proposed collection of information, including each proposed extension of an existing collection of information, before submitting the collection to OMB for approval. To comply with this requirement, the CFTC is publishing

notice of the proposed collection of information listed below.

With respect to the following collection of information, the CFTC invites comments on:

- Whether the proposed collection of information is necessary for the proper performance of the functions of the Commission, including whether the information will have a practical use;
- The accuracy of the Commission's estimate of the burden of the proposed collection of information, including the validity of the methodology and assumptions used;
- Ways to enhance the quality, usefulness, and clarity of the information to be collected; and
- Ways to minimize the burden of collection of information on those who are to respond, including through the use of appropriate automated electronic, mechanical, or other technological collection techniques or other forms of information technology; *e.g.,* permitting electronic submission of responses.

Large Trader Reports, OMB control number 3038–0009—Extension

Parts 15 through 21 of the Commission's regulations under the Commodity Exchange Act (Act) require large trader reports from clearing members, futures commission merchants, and foreign brokers and traders. These rules are designed to provide the Commission with information to effectively conduct its market surveillance program, which includes the detection and prevention of price manipulation and enforcement of speculative position limits.

The Commission estimates the burden of this collection of information as follows:

ESTIMATED ANNUAL REPORTING BURDEN

17 CFR section	Annual number of respondents	Total annual responses	Hours per response	Total hours
Parts 15–21	4,731	69,392	0.35	24,435

There are no capital costs or operating and maintenance costs associated with this collection.

Dated: March 5, 2002.

Jean A. Webb,

Secretary of the Commission.

[FR Doc. 02–5779 Filed 3–08–02; 8:45 am]

BILLING CODE 6351–01–M

DEPARTMENT OF EDUCATION

Notice of Proposed Information Collection Requests

AGENCY: Department of Education.

SUMMARY: The Leader, Regulatory Information Management Group, Office of the Chief Information Officer, invites comments on the proposed information collection requests as required by the Paperwork Reduction Act of 1995.

DATES: Interested persons are invited to submit comments on or before May 10, 2002.

SUPPLEMENTARY INFORMATION: Section 3506 of the Paperwork Reduction Act of 1995 (44 U.S.C. Chapter 35) requires that the Office of Management and Budget (OMB) provide interested Federal agencies and the public an early opportunity to comment on information collection requests. OMB may amend or waive the requirement for public consultation to the extent that public participation in the approval process would defeat the purpose of the information collection, violate State or Federal law, or substantially interfere with any agency's ability to perform its statutory obligations. The Leader, Regulatory Information Management Group, Office of the Chief Information Officer, publishes that notice containing proposed information collection requests prior to submission of these requests to OMB. Each proposed information collection, grouped by office, contains the following: (1) Type of review requested, *e.g.* new, revision, extension, existing or reinstatement; (2) title; (3) summary of the collection; (4) description of the need for, and proposed use of, the information; (5) respondents and frequency of collection; and (6) Reporting and/or Recordkeeping burden. OMB invites public comment.

The Department of Education is especially interested in public comment addressing the following issues: (1) Is this collection necessary to the proper functions of the Department; (2) will this information be processed and used in a timely manner; (3) is the estimate of burden accurate; (4) how might the Department enhance the quality, utility, and clarity of the information to be collected; and (5) how might the Department minimize the burden of this collection on the respondents, including through the use of information technology.

Dated: March 6, 2002.

John Tressler,

Leader, Regulatory Information Management, Office of the Chief Information Officer.

Office of the Undersecretary

Type of Review: New.

Title: Reading Excellence Act (REA) School Implementation and Impact Study: Site Visit Instruments.

Frequency: Annually.

Affected Public: State, Local, or Tribal Gov't, SEAs or LEAs; Federal Government.

Reporting and Recordkeeping Hour Burden:

Responses: 6,500.

Burden Hours: 28,875.

Abstract: The REASchool and Classrom Implementation and Impact Study (REA–SCII) is a 6-year study to learn about the implementation and impact of the REA legislation on instructional practice in reading and on student reading achievement. The study has the following features: (1) A representative sample of 75 schools that have received REA Local Reading Initiative sub-grants; (2) a longitudinal sample of kindergarten students followed through the end of second grade; (3) measures of student reading performance; (4) multiple observations of classroom reading instruction in grades K–2; and (5) surveys of and interview/focus groups with key school and district staff.

Requests for copies of the proposed information collection request may be accessed from *http://edicsweb.ed.gov,* or should be addressed to Vivian Reese, Department of Education, 400 Maryland Avenue, SW., Room 4050, Regional Office Building 3, Washington, DC 20202–4651 or to the e-mail address *vivian.reese@ed.gov.* Requests may also be electronically mailed to the Internet address *OCIO_RIMG@ed.gov* or faxed to 202–708–9346. Please specify the complete title of the information collection when making your request.

Comments regarding burden and/or the collection activity requirements should be directed to Jacqueline Montague at (202) 708–5359 or via her

Internet address *Jackie.Montague@ed.gov.* Individuals who use a telecommunications device for the deaf (TDD) may call the Federal Information Relay Service (FIRS) at 1–800–877–8339.

[FR Doc. 02–5797 Filed 3–8–02; 8:45 am]

BILLING CODE 4000–01–P

DEPARTMENT OF EDUCATION

Submission for OMB Review; Comment Request

AGENCY: Department of Education.

SUMMARY: The Leader, Regulatory Information Management Group, Office of the Chief Information Officer invites comments on the submission for OMB review as required by the Paperwork Reduction Act of 1995.

DATES: Interested persons are invited to submit comments on or before April 10, 2002.

ADDRESSES: Written comments should be addressed to the Office of Information and Regulatory Affairs, Attention: Lauren Wittenberg, Desk Officer, Department of Education, Office of Management and Budget, 725 17th Street, NW., Room 10202, New Executive Office Building, Washington, DC 20503 or should be electronically mailed to the Internet address *Lauren.Wittenberg@omb.eop.gov.*

SUPPLEMENTARY INFORMATION: Section 3506 of the Paperwork Reduction Act of 1995 (44 U.S.C. Chapter 35) requires that the Office of Management and Budget (OMB) provide interested Federal agencies and the public an early opportunity to comment on information collection requests. OMB may amend or waive the requirement for public consultation to the extent that public participation in the approval process would defeat the purpose of the information collection, violate State or Federal law, or substantially interfere with any agency's ability to perform its statutory obligations. The Leader, Regulatory Information Management Group, Office of the Chief Information Officer, publishes that notice containing proposed information collection requests prior to submission of these requests to OMB. Each proposed information collection, grouped by office, contains the following: (1) Type of review requested, *e.g.* new, revision, extension, existing or reinstatement; (2) title; (3) summary of the collection; (4) description of the need for, and proposed use of, the information; (5) respondents and frequency of collection; and (6) Reporting and/or Recordkeeping burden. OMB invites public comment.

Dated: March 6, 2002.

John Tressler,

Leader, Regulatory Information Management, Office of the Chief Information Officer.

Office of Special Education and Rehabilitative Services

Type of Review: New.

Title: Field Test of Agency Capacity to Implement Reporting Requirements Associated with Draft Evaluation Standard 3 and section 101 (a)(10)(c) of the Rehabilitation Act, as Amended.

Frequency: One-time.

Affected Public: State, Local, or Tribal Gov't, SEAs or LEAs.

Reporting and Recordkeeping Hour Burden:

Responses: 81.

Burden Hours: 9,801.

Abstract: This field test will assess Designated State Unit (VR agency) capacity to obtain and use unemployment insurance wage record data maintained by the State Employment Security Agencies (SESAs) needed to implement a proposed evaluation standard and associated performance indicators mandated by the 1992 amendments to the Rehabilitation Act, as amended by the Workforce Investment Act of 1998.

Requests for copies of the proposed information collection request may be accessed from *http://edicsweb.ed.gov,* or should be addressed to Vivian Reese, Department of Education, 400 Maryland Avenue, SW., Room 4050, Regional Office Building 3, Washington, DC 20202–4651, or to the e-mail address *vivian.reese@ed.gov.* Requests may also be electronically mailed to the Internet address *OCIO_RIMG@ed.gov* or faxed to 202–708–9346. Please specify the complete title of the information collection when making your request.

Comments regarding burden and/or the collection activity requirements should be directed to Sheila Carey at (202) 708–6287 or via her Internet address *Sheila.Carey@ed.gov.* Individuals who use a telecommunications device for the deaf (TDD) may call the Federal Information Relay Service (FIRS) at 1–800–877–8339.

[FR Doc. 02–5798 Filed 3–8–02; 8:45 am]

BILLING CODE 4000–01–P

DEPARTMENT OF ENERGY

Notice of Availability of the Draft Environmental Assessment for Waste Disposition Activities at the Paducah Gaseous Diffusion Plant

AGENCY: Department of Energy

ACTION: Notice of availability.

SUMMARY: The Department of Energy (DOE), announces the availability of the Draft Environmental Assessment (EA) for Waste Disposition Activities at the Paducah Site (DOE/EA–1339) for public review and comment. The Draft EA has been prepared in accordance with the requirements of the National Environmental Policy Act of 1969 as amended (NEPA) (42 U.S.C. 4321 *et seq.*); Council on Environmental Quality regulations implementing NEPA, 40 CFR parts 1500–1508; and DOE NEPA Implementing Procedures, 10 CFR part 1021.

The Draft EA evaluates the potential environmental impacts associated with continued waste management operations at the Paducah Site, as well as transportation of the waste to treatment and disposal facilities at various locations throughout the United States. The type of wastes analyzed include polychlorinated biphenyl (PCB) waste, low-level (radioactive) waste (LLW), mixed low-level waste (MLLW), and transuranic (TRU) waste. The Draft EA also evaluates the potential environmental impacts associated with the no action alternative.

The public is invited to comment on the Draft EA during the 45-day public comment period which starts on the date of this notice. All comments received will be considered in preparation of the final EA. Late comments will be considered to the extent practicable.

ADDRESSES: Comments on the Draft EA may be submitted by mail: U.S. Department of Energy, Oak Ridge Operations Office, Attn: Mr. David Allen, PO Box 2001, Oak Ridge, TN 37830, by fax (1–865–576–0746), electronically (*NEPA@oro.doe.gov*), or by phone (1–800–382–6938).

Copies of the Draft EA may also be obtained by contacting Mr. Gary Bodenstein, U.S. Department of Energy, Paducah Site Office, PO Box 1410, Paducah, KY 42001, by fax (1–270–441–6801), or electronically (*BodensteinGW@oro.doe.gov*). The Draft EA is available for review at the U.S. Department of Energy Environmental Information Center, Barkley Centre, 115 Memorial Drive, in Paducah Kentucky. The Draft EA is also available for review at the U.S. Department of Energy Public

Reading Room at 230 Warehouse Road, Oak Ridge, TN 37830.

For general information on the DOE NEPA process, please contact: Ms. Carol M. Borgstrom, Director, Office of NEPA Policy and Compliance (EH–42), U.S. Department of Energy, 1000 Independence Avenue, SW., Washington, DC 20585, telephone 202–586–4600, or leave a message at 1–800–472–2756.

DATES: The review period for the Draft EA ends April 25, 2002. Comments postmarked after that date will be considered to the extent practicable. One public meeting to discuss issues and receive oral comments on the Draft EA will be held on April 9, 2002, at the DOE Environmental Information Center, Barkley Centre, 115 Memorial Drive, in Paducah, Kentucky. The meeting will be held from 6–8 p.m. CST. The public meeting will provide the public with an opportunity to present comments, ask questions, and discuss concerns with DOE officials regarding the Draft EA. Specific information regarding the public meeting can be obtained by calling 1–270–441–5204, writing to the address above, or electronically.

SUPPLEMENTARY INFORMATION: The Draft EA evaluates DOE's proposed disposition activities for legacy and future-generated PCB wastes, LLW, MLLW, and TRU waste from the Paducah Gaseous Diffusion Plant at the Paducah Site in Paducah, Kentucky. The proposed action includes: Waste storage at the Paducah site; on-site treatment of a small portion of the waste volume covered in the Draft EA, off-site treatment at treatment locations throughout the United States; waste transport to treatment and disposal locations by truck, rail, or inter-modal shipment; and waste disposal at various locations throughout the United States. Off-site treatment and disposal locations for waste disposition include facilities in Nevada, Utah, Texas, Washington, Idaho, New Mexico, and Tennessee. Supporting activities are also evaluated in the Draft EA. Examples of these activities include, characterization activities of waste currently in storage, on-site waste movement, sorting, packaging, inspecting, labeling. The Draft EA also evaluates the no action alternative. Under this alternative, DOE would not perform disposition activities except for those needed for standard waste management and maintenance. No disposal of the existing and projected quantities of waste would occur. DOE would continue to store such waste. Ongoing non-CERCLA waste management operations would continue.

Issued in Oak Ridge, Tennessee on February 28, 2002.

David R. Allen,

Oak Ridge Operations NEPA Compliance Officer.

[FR Doc. 02–5751 Filed 3–8–02; 8:45 am]

BILLING CODE 6450–01–P

DEPARTMENT OF ENERGY

Office of Fossil Energy; National Petroleum Council

AGENCY: Department of Energy.

ACTION: Notice of open meeting.

SUMMARY: This notice announces a meeting of the National Petroleum Council. Federal Advisory Committee Act (Public Law 92–463,86 Stat. 770) requires notice of these meetings be announced in the **Federal Register**.

DATES: Wednesday, April 10, 2002, 9 a.m.

ADDRESSES: The St. Regis Hotel, Crystal Ballroom, 923 Sixteenth & K Streets, NW, Washington, DC.

FOR FURTHER INFORMATION CONTACT: Margie D. Biggerstaff, U.S. Department of Energy, Office of Fossil Energy, Washington, DC 20585. Phone: 202/586–3867.

SUPPLEMENTARY INFORMATION:

Purpose of the Committee: To provide advice, information, and recommendations to the Secretary of Energy on matters relating to oil and gas or the oil and gas industry.

Tentative Agenda:

—Call to order and introductory remarks by William A. Wise, Chair of the NPC.
—Remarks by the Honorable Spencer Abraham, Secretary of Energy.
—Administrative matters.
—Discussion of any other business properly brought before the NPC.
—Public comment (10-minute rule).
—Adjournment.

Public Participation: The meeting is open to the public. The chairperson of the Council is empowered to conduct the meeting in a fashion that will facilitate the orderly conduct of business. Any member of the public who wishes to file a written statement with the Council will be permitted to do so, either before or after the meeting. Members of the public who wish to make oral statements pertaining to agenda items should contact Margie D. Biggerstaff at the address or telephone number listed above. Requests must be received at least five days prior to the meeting and reasonable provision will be made to include the presentation on the agenda.

Transcripts: Available for public review and copying at the Public Reading Room, Room IE–190, Forrestal Building, 1000 Independence Avenue, SW., Washington, DC, between 9 a.m. and 4 p.m., Monday through Friday, except Federal holidays.

Issued at Washington, DC, on March 6, 2002.

Rachel M. Samuel,

Deputy Committee Advisory Management Officer.

[FR Doc. 02–5750 Filed 3–8–02; 8:45 am]

BILLING CODE 6450–01–P

DEPARTMENT OF ENERGY

Federal Energy Regulatory Commission

[Docket No. RP99–301–042]

ANR Pipeline Company; Notice of Compliance Filing

March 5, 2002.

Take notice that on February 25, 2002, ANR Pipeline Company (ANR) filed twenty service agreements with Madison Gas & Electric Company in compliance with the Commission's ''Order Accepting Negotiated Rate Agreements Subject to Conditions'' dated November 30, 2001 in the above-referenced docket. *ANR Pipeline Company*, 97 FERC ¶ 61,252 (2001).

Any person desiring to protest said filing should file a protest with the Federal Energy Regulatory Commission, 888 First Street, NE., Washington, DC 20426, in accordance with section 385.211 of the Commission's rules and regulations. All such protests must be filed in accordance with section 154.210 of the Commission's regulations. Protests will be considered by the Commission in determining the appropriate action to be taken, but will not serve to make protestants parties to the proceedings. Copies of this filing are on file with the Commission and are available for public inspection. This filing may also be viewed on the Web at *http://www.ferc.gov* using the ''RIMS'' link, select ''Docket#'' and follow the instructions (call 202–208–2222 for assistance). Comments, protests and interventions may be filed electronically via the Internet in lieu of paper. See, 18 CFR 385.2001(a)(1)(iii) and the instructions on the Commission's web site under the ''e-Filing'' link.

Magalie R. Salas,

Secretary.

[FR Doc. 02–5725 Filed 3–8–02; 8:45 am]

BILLING CODE 6717–01–P

DEPARTMENT OF ENERGY

Federal Energy Regulatory Commission

[Docket No. RP02–147–000]

ANR Pipeline Company; Notice To Convene Meeting and Setting Date for Convening Session

March 5, 2002.

On January 18, 2002, ANR Pipeline Company filed revised tariff sheets that limits the liability of ANR and its shippers to actual damages in certain circumstances. On February 28, 2002, the Commission accepted and suspended the tariff sheet to be effective on or earlier of August 1, 2002, or a date specified in a further order of the Commission, subject to refund and conditions. The Commission also directed the Dispute Resolution Service to convene a meeting of the parties by March 14, 2002, to arrange a process that may foster negotiation and agreement regarding the proposed tariff sheet.

The Commission's Dispute Resolution Service will conduct a convening session on March 13, 2002, commencing at 10 a.m., in Room 3M–2A at the Federal Energy Regulatory Commission, 888 First Street, NE., Washington, DC The convening session will cover Alternative Dispute Resolution (ADR) processes and interest-based negotiation and will finalize the ADR process. The Dispute Resolution Service will also assist the parties in better identifying and clarifying the issues in the above-captioned docket. If a party has any questions, please call Deborah Osborne at (202) 208–0831.

Magalie R. Salas,

Secretary.

[FR Doc. 02–5727 Filed 3–8–02; 8:45 am]

BILLING CODE 6717–01–P

DEPARTMENT OF ENERGY

Federal Energy Regulatory Commission

[Docket No. RP96–389–004]

Columbia Gulf Transmission Company; Notice of Negotiated Rate Filing

March 5, 2002.

Take notice that on March 1, 2002, Columbia Gulf Transmission Company (Columbia Gulf) tendered for filing the following contracts for disclosure of negotiated rate transactions: FTS–1 Service Agreement No. 72331 between Columbia Gulf Transmission Company and Cinergy Marketing & Trading, L.P. dated February 28, 2002 and FTS–1 Service Agreement No. 72307 between Columbia Gulf Transmission Company and Reliant Energy Services, Inc. dated February 28, 2002

Columbia Gulf states that transportation service is to commence April 1, 2002 under the agreements.

Columbia Gulf states that it has served copies of the filing on all parties identified on the official service list in Docket No. RP96–389.

Any person desiring to be heard or to protest said filing should file a motion to intervene or a protest with the Federal Energy Regulatory Commission, 888 First Street, NE., Washington, DC 20426, in accordance with Sections 385.214 or 385.211 of the Commission's Rules and Regulations. All such motions or protests must be filed in accordance with Section 154.210 of the Commission's Regulations. Protests will be considered by the Commission in determining the appropriate action to be taken, but will not serve to make protestants parties to the proceedings. Any person wishing to become a party must file a motion to intervene. Copies of this filing are on file with the Commission and are available for public inspection. This filing may also be viewed on the Web at *http://www.ferc.gov* using the ''RIMS'' link, select ''Docket#'' and follow the instructions (call 202–208–2222 for assistance). Comments, protests and interventions may be filed electronically via the Internet in lieu of paper. See, 18 CFR 385.2001(a)(1)(iii) and the instructions on the Commission's Web site under the ''e-Filing'' link.

Magalie R. Salas,

Secretary.

[FR Doc. 02–5723 Filed 3–8–02; 8:45 am]

BILLING CODE 6717–01–P

DEPARTMENT OF ENERGY

Federal Energy Regulatory Commission

[Docket No. EL02–63–000]

Constellation Power Source, Inc., Complainant, v. California Power Exchange, Corporation Respondent; Notice of Amended Complaint Filing

March 5, 2002.

Take notice that on February 26, 2002, Constellation Power Source, Inc. (Constellation) tendered for filing with the Federal Energy Regulatory Commission (Commission) an amended Appendix I to its Complaint filed February 25, 2002 in the above-referenced proceeding.

Any person desiring to be heard or to protest this filing should file a motion to intervene or protest with the Federal Energy Regulatory Commission, 888 First Street, NE., Washington, DC 20426, in accordance with Rules 211 and 214 of the Commission's Rules of Practice and Procedure (18 CFR 385.211 and 385.214). All such motions or protests must be filed on or before March 18, 2002. Protests will be considered by the Commission in determining the appropriate action to be taken, but will not serve to make protestants parties to the proceeding. Any person wishing to become a party must file a motion to intervene. Answers to the complaint shall also be due on or before March 18, 2002. Copies of this filing are on file with the Commission and are available for public inspection. This filing may also be viewed on the Web at *http://www.ferc.gov* using the ''RIMS'' link, select ''Docket #'' and follow the instructions (call 202–208–2222 for assistance). Comments, protests, interventions and answers may be filed electronically via the Internet in lieu of paper. See, 18 CFR 385.2001(a)(1)(iii) and the instructions on the Commission's Web site under the ''e-Filing'' link.

Magalie R. Salas,

Secretary.

[FR Doc. 02–5720 Filed 3–8–02; 8:45 am]

BILLING CODE 6717–01–P

DEPARTMENT OF ENERGY

Federal Energy Regulatory Commission

[Docket No. RP00–632–007]

Dominion Transmission, Inc.; Notice of Report of Refunds

March 5, 2002.

Take notice that on February 26, 2002, Dominion Transmission, Inc. (DTI) filed its report of refunds attributable to the resolution of the above-captioned proceeding. DTI states that the reported refunds and billing adjustments reflect DTI's implementation of the TCRA settlement in the above-captioned proceeding.

DTI states that the purpose of this filing is to report refunds (including interest) that DTI made by wire on January 29, 2002, and billing adjustments made with January invoices. DTI further states that these refunds were made as a result of DTI's implementation of the Commission's September 13, 2001, and October 26,

2001, letter orders, in Docket Nos. RP00–632–000, *et al.*

DTI states that copies of its report and summary workpapers are being mailed to affected customers, interested state commissions and all parties to the above-captioned proceeding.

Any person desiring to protest said filing should file a protest with the Federal Energy Regulatory Commission, 888 First Street, NE., Washington, DC 20426, in accordance with section 385.211 of the Commission's rules and Regulations. All such protests must be filed on or before March 12, 2002. Protests will be considered by the Commission in determining the appropriate action to be taken, but will not serve to make protestants parties to the proceedings. Copies of this filing are on file with the Commission and are available for public inspection. This filing may also be viewed on the web at *http://www.ferc.gov* using the ''RIMS'' link, select ''Docket#'' and follow the instructions (call 202–208–2222 for assistance). Comments, protests and interventions may be filed electronically via the Internet in lieu of paper. See, 18 CFR 385.2001(a)(1)(iii) and the instructions on the Commission's Web site under the ''e-Filing'' link.

Magalie R. Salas,

Secretary.

[FR Doc. 02–5726 Filed 3–8–02; 8:45 am]

BILLING CODE 6717–01–P

DEPARTMENT OF ENERGY

Federal Energy Regulatory Commission

[Docket No. RP02–166–000]

Florida Gas Transmission Company; Notice of Proposed Changes in FERC Gas Tariff

March 5, 2002.

Take notice that on February 28, 2002, Florida Gas Transmission Company (FGT) tendered for filing to become part of its FERC Gas Tariff, Third Revised Volume No. 1, the following tariff sheets, to be effective April 1, 2002:

Fourth Revised Sheet No. 528
Third Revised Sheet No. 529
Fourth Revised Sheet No. 530
Third Revised Sheet No. 531
Third Revised Sheet No. 532
Fourth Revised Sheet No. 533
Fourth Revised Sheet No. 534
Fourth Revised Sheet No. 535
First Revised Sheet No. 535.01
Third Revised Sheet No. 535A
Third Revised Sheet No. 536
Third Revised Sheet No. 537
Third Revised Sheet No. 538
Original Sheet No. 538A
Original Sheet No. 538B
Original Sheet No. 538C
Original Sheet No. 538D
Third Revised Sheet No. 539
Fourth Revised Sheet No. 540
Fourth Revised Sheet No. 541
Fourth Revised Sheet No. 542

FGT states that on December 1, 1999, in Docket No. CP00–40–000, FGT filed for authorization to expand the capacity of its system in order to provide incremental firm transportation service pursuant to Rate Schedule FTS–2 (Phase V Certificate Application). Included as part of the Phase V Certificate Application were the Phase V shippers' FTS–2 service agreements. FGT further states that in its Preliminary Determination on Nonenvironmental Issues dated November 22, 2000 (''PD'') the Commission noted that these service agreements contained certain variations from the FTS–2 Form of Service Agreement contained in FGT's Tariff. The PD directed FGT ''to refile them so that they conform with the FTS–2 Form of Service Agreement in its tariff or to develop a generally applicable FTS–2 Form of Service Agreement to conform with the Phase V agreements.'' FGT states that the instant filing includes tariff modifications to its FTS–2 Form of Service Agreement to include expansion provisions which generally conform to the expansion-type service agreements filed with the Phase V Certificate Application, and to make the FTS–2 Form of Service Agreement adaptable for incremental service offered as a result of future capacity expansions by FGT.

FGT states that copies of the filing were mailed to all interested parties and state commissions.

Any person desiring to be heard or to protest said filing should file a motion to intervene or a protest with the Federal Energy Regulatory Commission, 888 First Street, NE., Washington, DC 20426, in accordance with sections 385.214 or 385.211 of the Commission's rules and regulations. All such motions or protests must be filed in accordance with section 154.210 of the Commission's regulations. Protests will be considered by the Commission in determining the appropriate action to be taken, but will not serve to make protestants parties to the proceedings. Any person wishing to become a party must file a motion to intervene. Copies of this filing are on file with the Commission and are available for public inspection. This filing may also be viewed on the web at *http://www.ferc.gov* using the ''RIMS'' link, select ''Docket#'' and follow the instructions (call 202–208–2222 for assistance). Comments, protests and interventions may be filed electronically via the Internet in lieu of paper. See, 18 CFR 385.2001(a)(1)(iii) and the instructions on the Commission's web site under the ''e-Filing'' link.

Magalie R. Salas,

Secretary.

[FR Doc. 02–5730 Filed 3–8–02; 8:45 am]

BILLING CODE 6717–01–P

DEPARTMENT OF ENERGY

Federal Energy Regulatory Commission

[Docket No. RP02–167–000]

Florida Gas Transmission Company; Notice of Filing

March 5, 2002.

Take notice that on February 28, 2002, Florida Gas Transmission Company (FGT) tendered for filing service agreements for its Phase V Expansion. No tariff changes are proposed.

FGT states that pursuant to the Preliminary Determination on Nonenvironmental Issues issued by the Federal Energy Regulatory Commission (Commission) on November 22, 2000 in Docket Nos. CP00–40–000, et al., which addressed all of the nonenvironmental issues in the Phase V Expansion, the Commission noted that the service agreements attached to the application did not track exactly the Rate Schedule FTS–2 Form of Service Agreement in the FGT FERC Gas Tariff. The Commission directed that FGT either change the form of service agreement in its tariff to conform to the service agreements in the Phase V Expansion or that FGT change the service agreements to conform to the tariff.

Accordingly, FGT states that it is filing the Phase V service agreements under Section 4 of the Natural Gas Act. In addition, FGT is filing concurrently, in a companion filing, to modify its standard Form of Service Agreement for Rate Schedule No. FTS–2 to incorporate various terms and conditions applicable to expansion projects.

Any person desiring to be heard or to protest said filing should file a motion to intervene or a protest with the Federal Energy Regulatory Commission, 888 First Street, NE., Washington, DC 20426, in accordance with sections 385.214 or 385.211 of the Commission's rules and regulations. All such motions or protests must be filed on or before March 12, 2002. Protests will be considered by the Commission in determining the appropriate action to be taken, but will not serve to make protestants parties to the proceedings.

Any person wishing to become a party must file a motion to intervene. Copies of this filing are on file with the Commission and are available for public inspection. This filing may also be viewed on the Web at *http://www.ferc.gov* using the ''RIMS'' link, select ''Docket#'' and follow the instructions (call 202–208–2222 for assistance). Comments, protests and interventions may be filed electronically via the Internet in lieu of paper. See, 18 CFR 385.2001(a)(1)(iii) and the instructions on the Commission's web site under the ''e-Filing'' link.

Magalie R. Salas,

Secretary.

[FR Doc. 02–5731 Filed 3–8–02; 8:45 am]

BILLING CODE 6717–01–P

DEPARTMENT OF ENERGY

Federal Energy Regulatory Commission

[Docket No. RP02–153–001]

Horizon Pipeline Company, L.L.C.; Notice of Proposed Changes in FERC Gas Tariff

March 5, 2002.

Take notice that on March 1, 2002, Horizon Pipeline Company, L.L.C. (Horizon) tendered for filing to become part of its pending FERC Gas Tariff, Original Volume No. 1, pro forma First Revised Sheet No. 149A. Horizon states that it also withdrew pending pro forma First Revised Sheet No. 197 Horizon states that the purpose of this filing is to modify its Order No. 637 compliance filing based on customer's comments.

Horizon states that copies of the filing are being mailed to interested state commissions and all parties set out on the Commission's official service lists in Docket Nos. RP02–153 and CP00–129, et al.

Any person desiring to protest said filing should file a protest with the Federal Energy Regulatory Commission, 888 First Street, NE., Washington, DC 20426, in accordance with Section 385.211 of the Commission's rules and regulations. All such protests must be filed in accordance with Section 154.210 of the Commission's Regulations. Protests will be considered by the Commission in determining the appropriate action to be taken, but will not serve to make protestants parties to the proceedings. Copies of this filing are on file with the Commission and are available for public inspection. This filing may also be viewed on the Web at *http://www.ferc.gov* using the ''RIMS'' link, select ''Docket#'' and follow the instructions (call 202–208–2222 for assistance). Comments, protests and interventions may be filed electronically via the Internet in lieu of paper. See, 18 CFR 385.2001(a)(1)(iii) and the instructions on the Commission's Web site under the ''e-Filing'' link.

Magalie R. Salas,

Secretary.

[FR Doc. 02–5728 Filed 3–8–02; 8:45 am]

BILLING CODE 6717–01–P

DEPARTMENT OF ENERGY

Federal Energy Regulatory Commission

[Docket No. RP02–165–000]

Horizon Pipeline Company, L.L.C.; Notice of Proposed Changes in FERC Gas Tariff

March 5, 2002.

Take notice that on February 27, 2002, Horizon Pipeline Company, L.L.C. (Horizon) tendered for filing to become part of its FERC Gas Tariff, Original Volume No. 1, certain tariff sheets listed in Appendix A to the filing, to be effective April 1, 2002.

Horizon states that the purpose of this filing is to update Horizon's pending Tariff and correct or clarify various provisions.

Horizon states that copies of the filing are being mailed to interested state commissions and all parties set out on the Commission's official service lists in Docket Nos. CP00–129 and CP00–132.

Any person desiring to be heard or to protest said filing should file a motion to intervene or a protest with the Federal Energy Regulatory Commission, 888 First Street, NE., Washington, DC 20426, in accordance with sections 385.214 or 385.211 of the Commission's rules and regulations. All such motions or protests must be filed in accordance with section 154.210 of the Commission's regulations. Protests will be considered by the Commission in determining the appropriate action to be taken, but will not serve to make protestants parties to the proceedings. Any person wishing to become a party must file a motion to intervene. Copies of this filing are on file with the Commission and are available for public inspection. This filing may also be viewed on the Web at *http://www.ferc.gov* using the ''RIMS'' link, select ''Docket#'' and follow the instructions (call 202–208–2222 for assistance). Comments, protests and interventions may be filed electronically via the Internet in lieu of paper. See, 18 CFR 385.2001(a)(1)(iii) and the instructions on the Commission's Web site under the ''e-Filing'' link.

Magalie R. Salas,

Secretary.

[FR Doc. 02–5729 Filed 3–8–02; 8:45 am]

BILLING CODE 6717–01–P

DEPARTMENT OF ENERGY

Federal Energy Regulatory Commission

[Docket No. PR02–11–000]

Jefferson Island Storage & Hub L.L.C.; Notice of Petition for Rate Approval

March 5, 2002.

Take notice that on February 26, 2002, Jefferson Island Storage & Hub, L.L.C. (Jefferson Island) filed, pursuant to Section 284.123(b)(2) of the Commission's Regulations, a petition for rate approval of a system-wide rate it proposes to charge for transporting natural gas pursuant to section 311(a)(2) of the Natural Gas Policy Act of 1978 (NGPA). Jefferson Island proposes to continue its current maximum interruptible rate of $0.08000 per MMBtu plus a two-percent in-kind fuel reimbursement when compression is required for pipeline boost. Jefferson Island requests that rates be effective January 15, 2002.

Pursuant to section 284.123(b)(2)(ii), if the Commission does not act within 150 days of the date of this filing, the rates will be deemed to be fair and equitable and not in excess of an amount which interstate pipelines would be permitted to charge for similar transportation service. The Commission may, prior to the expiration of the 150 day period, extend the time for action or institute a proceeding to afford parties an opportunity for written comments and for the oral presentation of views, data, and arguments.

Any person desiring to participate in this rate proceeding must file a motion to intervene or protest with the Federal Energy Regulatory Commission, 888 First Street, NE., Washington DC 20426, in accordance with Sections 385.214 or 385.211 of the Commission's Rules and Regulations. All such motions or protests must be filed with the Secretary of the Commission on or before March 26, 2002. Protests will be considered by the Commission in determining the appropriate action to be taken, but will not serve to make protestants parties to the proceedings. Any person wishing to become a party must file a motion to intervene. This petition for rate approval is on file with the Commission and are available for public inspection.

This filing may also be viewed on the Web at *http://www.ferc.gov* using the ''RIMS'' link, select ''Docket#'' and follow the instructions (call 202–208–2222 for assistance). Comments, protests and interventions may be filed electronically via the Internet in lieu of paper. See, 18 CFR 385.2001(a)(1)(iii) and the instructions on the Commission's Web site under the ''e-Filing'' link.

Magalie R. Salas,

Secretary.

[FR Doc. 02–5722 Filed 3–8–02; 8:45 am]

BILLING CODE 6717–01–P

DEPARTMENT OF ENERGY

Federal Energy Regulatory Commission

[Docket No. RP97–374–004]

Northwest Pipeline Corporation; Notice of Compliance Filing

March 5, 2002.

Take notice that on February 28, 2002, Northwest Pipeline Corporation (Northwest) tendered for filing as part of its FERC Gas Tariff, Third Revised Volume No. 1, the following tariff sheets, with an effective date of February 18, 2002:

Substitute Eleventh Revised Sheet No. 364
Substitute Original Sheet No. 370

Northwest states that, consistent with the Commission's order in this proceeding, it is submitting tariff sheets to reflect removal of the nonconforming provision in Northwest's negotiated rate service agreement with Calpine Energy Services, L.P.

Any person desiring to protest said filing should file a protest with the Federal Energy Regulatory Commission, 888 First Street, NE., Washington, DC 20426, in accordance with Section 385.211 of the Commission's Rules and Regulations. All such protests must be filed in accordance with Section 154.210 of the Commission's Regulations. Protests will be considered by the Commission in determining the appropriate action to be taken, but will not serve to make protestants parties to the proceedings. Copies of this filing are on file with the Commission and are available for public inspection. This filing may also be viewed on the Web at *http://www.ferc.gov* using the ''RIMS'' link, select ''Docket#'' and follow the instructions (call 202–208–2222 for assistance). Comments, protests and interventions may be filed electronically via the Internet in lieu of paper. See, 18 CFR 385.2001(a)(1)(iii) and the instructions on the Commission's Web site under the ''e-Filing'' link.

Magalie R. Salas,

Secretary.

[FR Doc. 02–5724 Filed 3–8–02; 8:45 am]

BILLING CODE 6717–01–P

DEPARTMENT OF ENERGY

Federal Energy Regulatory Commission

[Project No. 2114–104]

Public Utility District No. 2 of Grant County, Washington; Notice Dismissing Complaint

March 4, 2002.

On February 12, 2002, the Yakama Nation (Complainant) filed a complaint against Public Utility District No. 2 of Grant County, Washington (Grant County), alleging that Grant County is in violation of its license for the Priest Rapids Hydroelectric Project No. 2114, Federal law authorizing the development of the Project, and certain sections of the Federal Power Act. The Complainant requested that the Commission employ fast track procedures to address its complaint.

On February 28, 2002, Complainant filed a motion, citing unspecified changed circumstances, requesting that the Commission hold processing of its complaint in abeyance pending the filing of an amended complaint at an unspecified future time. Rather than holding the complaint in abeyance pending the filing of a new, revised complaint, we will dismiss it without prejudice. At such time as complainant files an amended complaint, it will be noticed and a deadline for responses thereto will be established.

Magalie R. Salas,

Secretary.

[FR Doc. 02–5696 Filed 3–8–02; 8:45 am]

BILLING CODE 6717–01–P

DEPARTMENT OF ENERGY

Federal Energy Regulatory Commission

[Docket No. CP02–95–000]

Steuben Gas Storage Company; Notice of Application

March 5, 2002.

Take notice that on February 22, 2002, Steuben Gas Storage Company (Steuben Gas), Nine Greenway Plaza, Houston, Texas 77046, filed an application for a certificate of public convenience and necessity pursuant to section 7 of the Natural Gas Act (NGA), as amended, and the Federal Energy Regulatory Commission's (the Commission) Rules and Regulations thereunder. Steuben Gas requests authorization to modify two wells at the Adrian storage field in Steuben County, New York. The modifications will consist of: converting Adrian No. 2 well from an observation well to an injection/withdrawal well; and, laterally extending up to 1500 feet Adrian No. 8 well. These modifications are to improve the Adrian field's late-season deliverability, while maintaining the field's maximum operating limits originally certificated, all as more fully set forth in the application, which is on file with the Commission, and open for public inspection. This filing may be viewed on the Web at *http://www.ferc.gov* using the ''RIMS'' link, select ''Docket #'' and follow the instructions (call 202–208–2222 for assistance).

Steuben Gas requests that the Commission issue a certificate by May 1, 2002 so that contracts may be awarded and required work completed by July 31, 2002. The cost of the modifications is estimated to be approximately $700,000. No new rates or rate schedules are proposed. The proposed modifications should improve the storage field's operating reliability and availability and provide significant operational benefits to all customers, so Steuben Gas would be allowed to roll-in the modification's costs in a future rate case. No changes are proposed to the currently authorized Maximum Daily Withdrawal Quantity or Maximum Daily Injection Quantity levels.

Questions regarding this filing should be directed to Dawn A. McGuire, Attorney, Steuben Gas Storage Company, 9 E Greenway Plaza, Houston, TX 77046 or call (832) 676–5503.

There are two ways to become involved in the Commission's review of this project. First, any person wishing to obtain legal status by becoming a party to the proceedings for this project should, on or before March 26, 2002, file with the Federal Energy Regulatory Commission, 888 First Street, NE, Washington, DC 20426, a motion to intervene in accordance with the requirements of the Commission's Rules of Practice and Procedure (18 CFR 385.214 or 385.211) and the Regulations under the NGA (18 CFR 157.10). A person obtaining party status will be placed on the service list maintained by the Secretary of the Commission and will receive copies of all documents filed by the applicant and by all other parties. A party must submit 14 copies

of filings made with the Commission and must mail a copy to the applicant and to every other party in the proceeding. Only parties to the proceeding can ask for court review of Commission orders in the proceeding.

However, a person does not have to intervene in order to have comments considered. The second way to participate is by filing with the Secretary of the Commission, as soon as possible, an original and two copies of comments in support of or in opposition to this project. The Commission will consider these comments in determining the appropriate action to be taken, but the filing of a comment alone will not serve to make the filer a party to the proceeding. The Commission's rules require that persons filing comments in opposition to the project provide copies of their protests only to the party or parties directly involved in the protest.

Persons who wish to comment only on the environmental review of this project should submit an original and two copies of their comments to the Secretary of the Commission. Environmental commenters will be placed on the Commission's environmental mailing list, will receive copies of the environmental documents, and will be notified of meetings associated with the Commission's environmental review process. Environmental commenters will not be required to serve copies of filed documents on all other parties. However, the nonparty commenters will not receive copies of all documents filed by other parties or issued by the Commission (except for the mailing of environmental documents issued by the Commission) and will not have the right to seek court review of the Commission's final order.

The Commission may issue a preliminary determination on non-environmental issues prior to the completion of its review of the environmental aspects of the project. This preliminary determination typically considers such issues as the need for the project and its economic effect on existing customers of the applicant, on other pipelines in the area, and on landowners and communities. For example, the Commission considers the extent to which the applicant may need to exercise eminent domain to obtain rights-of-way for the proposed project and balances that against the non-environmental benefits to be provided by the project. Therefore, if a person has comments on community and landowner impacts from this proposal, it is important either to file comments or to intervene as early in the process as possible.

If the Commission decides to set the application for a formal hearing before an Administrative Law Judge, the Commission will issue another notice describing that process. At the end of the Commission's review process, a final Commission order approving or denying a certificate will be issued.

Comments, protests and interventions may be filed electronically via the Internet in lieu of paper. See, 18 CFR 385.2001(a)(1)(iii) and the instructions on the Commission's Web site under the ''e-Filing'' link.

Magalie R. Salas,

Secretary.

[FR Doc. 02–5719 Filed 3–8–02; 8:45 am]

BILLING CODE 6717–01–P

DEPARTMENT OF ENERGY

Federal Energy Regulatory Commission

[Project No. 6032–041]

Niagara Mohawk Power Corporation and Fourth Branch Associates (Mechanicville); New York; Notice of Availability of Final Environmental Assessment

March 4, 2002.

In accordance with the National Environmental Policy Act of 1969 and the Federal Energy Regulatory Commission's (Commission) regulations, 18 CFR part 380 (Order No. 486, 52 FR 47897), the Office of Energy Projects has reviewed the application for license for the Mechanicville Hydroelectric Project, located on the Hudson River in Saratoga and Rensselaer Counties, New York, and has prepared a Final Environmental Assessment (FEA) for the project. A Draft Environmental Assessment was issued on November 13, 2001. No federal lands or Indian reservations are occupied by project works or located within the project boundary.

The FEA contains the staff's analysis of the potential environmental impacts of the project and concludes that surrendering the license for the project, with appropriate environmental protective measures, would not constitute a major federal action that would significantly affect the quality of the human environment.

A copy of the FEA is attached to the Commission Order Accepting License Surrender issued on February 28, 2002 and is available for public inspection. The FEA may also be viewed on the web at *http://www.ferc.gov* using the ''RIMS'' link—select ''Docket #'' and follow the instructions (call 202–208–2222 for assistance).

For further information, contact Ellen Armbruster (202) 208–1672.

Magalie R. Salas,

Secretary.

[FR Doc. 02–5697 Filed 3–8–02; 8:45 am]

BILLING CODE 6717–01–P

DEPARTMENT OF ENERGY

Federal Energy Regulatory Commission

[Docket No. CP01–361–000]

Northwest Pipeline Corp.; Notice of Availability of the Environmental Assessment for the Proposed Grays Harbor Pipeline Project

March 4, 2002.

The staff of the Federal Energy Regulatory Commission (FERC or Commission) has prepared an environmental assessment (EA) on the natural gas pipeline facilities proposed by Northwest Pipeline Corporation (Northwest) in the above-referenced docket.

The EA was prepared to satisfy the requirements of the National Environmental Policy Act. The staff concludes that approval of the proposed project, with appropriate mitigating measures, would not constitute a major Federal action significantly affecting the quality of the human environment.

The EA assesses the potential environmental effects of the construction and operation of the proposed gas pipeline and aboveground facilities including:

- About 49.0 miles of a 20-inch-diameter pipeline in Thurston and Grays Harbor Counties, Washington, which would tie in with Northwest's existing mainline and mainline loop south of the Town of Ranier in Thurston County, Washington. The pipeline would extend from the interconnect with Northwest's existing system to the Satsop Combustion Turbine Project that is being constructed in the town of Satsop in Grays Harbor County, Washington.
- A meter station adjacent to the Satsop Project plant site at the end of the pipeline;
- Upgrades to the existing Tumwater Compressor Station in Thurston County, including the addition of a new compressor unit (rated 3,894 horsepower) and replacement of an existing backup generator with a 355 kilowatt backup generator; and
- Other aboveground facilities including two 20-inch-diameter

mainline taps, a pig launcher, four 20-inch-diameter block valve assemblies; and a new antenna and radio repeater at the existing Capitol Peak radio site.

The purpose of the proposed facilities would be to supply natural gas to fully operate Duke Energy Grays Harbor LLC's Satsop Combustion Turbine Project in Satsop, Washington. The pipeline would have a design capacity of up to 161,500 dekatherms per day. The electricity produced by the Satsop Combustion Turbine Project would be sold in the wholesale electric market. A portion of the output would be delivered to Energy Northwest, and the balance would be delivered to Bonneville Power Authority to help satisfy current and projected power demand.

The EA has been placed in the public files of the FERC. A limited number of copies of the EA are available for distribution and public inspection at: Federal Energy Regulatory Commission, Public Reference and Files Maintenance Branch 888 First Street, N.E., Room 2A, Washington, DC 20426, (202) 208–1371.

Copies of the EA have been mailed to Federal, state and local agencies, public interest groups, interested individuals, newspapers, and parties to this proceeding.

Any person wishing to comment on the EA may do so. To ensure consideration prior to a Commission decision on the proposal, it is important that we receive your comments before the date specified below. Please carefully follow these instructions to ensure that your comments are received in time and properly recorded:

- Send two copies of your comments to: Secretary, Federal Energy Regulatory Commission 888 First St., N.E., Room 1A, Washington, DC 20426;
- Label one copy of the comments for the attention of the Office of Energy Projects (Gas Branch 2)
- Reference Docket No. CP01–361–000; and
- Mail your comments so that they will be received in Washington, DC on or before April 3, 2002.

Comments may also be filed electronically via the Internet in lieu of paper. See 18 CFR 385.2001(a)(1)(iii) and the instructions on the Commission's web site at *http://www.ferc.gov* under the ''e-Filing'' link and the link to the User's Guide. Before you can file comments you will need to create an account which can be created by clicking on ''Login to File'' and then ''New User Account.''

Comments will be considered by the Commission but will not serve to make the commentor a party to the proceeding. Any person seeking to become a party to the proceeding must file a motion to intervene pursuant to Rule 214 of the Commission's Rules of Practice and Procedures (18 CFR 385.214).[1] Only intervenors have the right to seek rehearing of the Commission's decision.

Affected landowners and parties with environmental concerns may be granted intervenor status upon showing good cause by stating that they have a clear and direct interest in this proceeding which would not be adequately represented by any other parties. You do not need intervenor status to have your comments considered.

Additional information about the proposed project is available from the Commission's Office of External Affairs, at (202) 208–1088 or on the FERC Internet website *(www.ferc.gov)* using the ''RIMS'' link to information in this docket number. Click on the ''RIMS'' link, select ''Docket #'' from the RIMS Menu, and follow the instructions. For assistance with access to RIMS, the RIMS helpline can be reached at (202) 208–2222.

Similarly, the ''CIPS'' link on the FERC Internet website provides access to the texts of formal documents issued by the Commission, such as orders, notices, and rulemakings. From the FERC Internet website, click on the ''CIPS'' link, select ''Docket #'' from the CIPS menu, and follow the instructions. For assistance with access to CIPS, the CIPS helpline can be reached at (202) 208–2474.

Magalie R. Salas,

Secretary.

[FR Doc. 02–5694 Filed 3–8–02; 8:45 am]

BILLING CODE 6717–01–P

[1] Interventions may also be filed electronically via the Internet in lieu of paper. See the previous discussion on filing comments electronically.

DEPARTMENT OF ENERGY

Federal Energy Regulatory Commission

[Docket No. CP01–415–000]

East Tennessee Natural Gas Company; Notice of Site Visit

March 4, 2002.

Between March 18–20, 2002 the staff will be conducting site visits of the project route for the proposed Patriot Expansion in Wythe and Smyth Counties in Virginia and in Sullivan, Knox, Hamilton, Franklin, and Morgan Counties in Tennessee. Representatives of East Tennessee Natural Gas Company will accompany Commission staff. Anyone interested in participating in the site visits may contact the Commission's Office of External Affairs at (201) 208–1088 for more details and must provide their own transportation.

Magalie R. Salas,

Secretary.

[FR Doc. 02–5695 Filed 3–8–02; 8:45 am]

BILLING CODE 6717–01–P

DEPARTMENT OF ENERGY

Federal Energy Regulatory Commission

[Docket No. EL01–118–000]

Investigation of Terms and Conditions of Public Utility Market-Based Rate Authorizations; Notice of Staff Conference Agenda

March 1, 2002.

As announced in the Notice of Staff Conference issued on February 25, 2002, Commission staff will hold a conference on March 11, 2002 to address the comments and reply comments that were filed in this proceeding. The purpose of this conference is to determine whether and how the proposed tariff condition can be modified to address legitimate concerns that have been raised by commenters while, at the same time, protecting customers against unjust and unreasonable rates that may result from anticompetitive behavior or the exercise of market power. A key question to be considered is whether the proposed tariff condition can be modified to adequately protect customers on an interim basis until such time as the Commission adopts other measures to ensure competitive markets, including standard market design rules (with market-power mitigation rules where appropriate) and the establishment of RTO market monitoring units. At that time, a determination could be made as to whether a tariff condition will continue to be needed.

The conference will start at 9:30 a.m. and adjourn at 1:30 p.m. It is scheduled to be held in the Commission meeting room at the Federal Energy Regulatory Commission, 888 First Street, NE, Washington, DC The conference is open for the public to attend.

An agenda of the conference that includes a list of conference panelists is appended to this notice as Attachment A. In addition, a staff paper that provides an overview of the comments and identifies possible modifications to the tariff condition is appended to this notice as Attachment B. Those who wish to submit comments following the conference may file written comments,

limited to 20 pages in length, by March 22, 2002.

Filing Requirements for Paper and Electronic Filings

Comments, papers, or other documents related to this proceeding may be filed in paper format or electronically. Those filing electronically do not need to make a paper filing.

For paper filings, the original and 14 copies of the comments should be submitted to the Office of the Secretary, Federal Energy Regulatory Commission, 888 First Street, NE, Washington DC 20426 and should refer to Docket No. EL01–118–000.

Documents filed electronically via the Internet must be prepared in WordPerfect, MS Word, Portable Document Format, or ASCII format. To file the document, access the Commission's website at www.ferc.gov, click on ''E-Filing'' and then follow the instructions for each screen. First time users will have to establish a user name and password. The Commission will send an automatic acknowledgment to the sender's E-mail address upon receipt of comments. User assistance for electronic filing is available at 202–208–0258 or by E-mail to efiling@ferc.fed.us. Comments should not be submitted to the E-mail address.

All comments will be placed in the Commission's public files and will be available for inspection in the Commission's Public Reference Room at 888 First Street, NE, Washington DC 20426, during regular business hours. Additionally, all comments may be viewed, printed, or downloaded remotely via the Internet through FERC's Homepage using the RIMS link. User assistance for RIMS is available at 202–208–2222, or by E-mail to rimsmaster@ferc.fed.us.

Opportunities for Listening to and Viewing the Conference Offsite and Obtaining a Transcript

The conference will be transcribed. Those interested in obtaining transcripts should contact Ace Federal Reporters at 202–347–3700.

The Capitol Connection will broadcast the conference live via the Internet and by phone. To find out more about The Capitol Connection's Internet and phone bridge, contact David Reininger or Julia Morelli at 703–993–3100 or go to *www.capitolconnection.gmu.edu*.

Live and archived audio of the conference will also available for a fee via National Narrowcast Network. Live audio is available by telephone at 202–966–2211 and by subscription on the Internet at www.hearing.com. The Internet audio will be archived and available for listening after the event is completed. Billing is based on listening time.

Anyone interested in purchasing videotapes of the conference should call VISCOM at 703–715–7999.

Questions about the conference program should be directed to: Saida Shaalan Office of Markets, Tariffs, and Rates Federal Energy Regulatory Commission 888 First Street, NE Washington, DC 20426 202–208–0278 Saida.Shaalan@ferc.fed.us

Linwood A. Watson, Jr.,

Deputy Secretary.

Attachment A

Agenda—Conference on Investigation of Terms and Conditions of Public Utility Market-Based Rate Authorizations

[Docket No. EL01–118–000]

I. Opening Remarks—9:30 a.m.–10 a.m.

- David Hunger, Economist, Office of Markets, Tariffs and Rates, Division of Rates and Tariffs, West
- Jerome Pederson, Energy Industry Analyst, Office of Markets, Tariffs and Rates, Division of Issue Identification and Resolution Management
- Joyce Kim, Staff Attorney, Office of General Counsel

I. Panel Discussion—10 a.m.–11:30 a.m.

- Steven Cadwallader, Connecticut Department of Public Utilities Control
- Julie Simon, Vice President of Policy, Electric Power Supply Association
- Scott M. Harvey, Director with LECG, LLC
- John C. Hilke, Economist and Electricity Project Coordinator, Bureau of Economics, Federal Trade Commission
- Mark M. Jacobs, Goldman Sachs and Company
- Gerald Norlander, Director, Public Utility Law Project, National Association of State Utility Consumer Advocates
- Robert O'Neil, Counsel for National Rural Electric Cooperative Association

Break 11:30 a.m.–11:45 a.m.

III. Open Discussion (Open to any interested participant)—11:45 a.m.–1:30 p.m.

Attachment B

Staff Paper—Conference on Investigation of Terms and Conditions of Public Utility Market-Based Rate Authorizations

[Docket No. EL01–118–000]

I. Commission's Proposal in November 20, 2001 Order

In the November 20 Order in this proceeding,[1] the Commission noted that it has become increasingly concerned about the potential that public utilities with market-based rate authorization might, under certain circumstances, exercise market power or engage in anticompetitive behavior that could result in unjust or unreasonableness rates. The Commission proposed to take steps now to minimize the potential for any such market power abuse or anticompetitive behavior to protect customers against possible unjust and unreasonable rates. In particular, the Commission proposed to revise all existing market-based rate tariffs and authorizations to include the following provision: ''As a condition of obtaining and retaining market-based rate authority, the seller is prohibited from engaging in anticompetitive behavior or the exercise of market power. The seller's market-based rate authority is subject to refunds or other remedies as may be appropriate to address any anticompetitive behavior or exercise of market power.''

The Commission stated that anticompetitive behavior or exercises of market power include behavior that raises the market price through physical or economic withholding of supplies. The November 20 Order explains that ''physical withholding'' occurs ''when a supplier fails to offer its output to the market during periods when the market price exceeds the supplier's full incremental costs,'' and ''economic withholding'' occurs ''when a supplier offers output to the market at a price that is above both its full incremental costs and the market price (and thus, the output is not sold).''

The Commission solicited initial and reply comments on its proposal. More than 90 comments (initial and reply) were received. Some commenters argue that the Commission's proposed tariff condition is overly broad or vague and will create uncertainty in the marketplace. Others argue that the condition does not go far enough. An overview of the comments and a list of possible modifications to the tariff condition is provided below.

The purpose of this conference is to determine whether and how the proposed tariff condition could be modified to address legitimate concerns that have been raised by the commenters while, at the same time, satisfying the Commission's concern that customers be protected against unjust and unreasonable rates that may result from anticompetitive behavior or the exercise of market power. A key question to be considered is whether the proposed tariff condition can be modified to adequately protect customers on an interim basis until such time as the Commission adopts other measures to ensure competitive markets, including standard market design rules (with market-power mitigation rules where appropriate) and the establishment of RTO market monitoring units. At that time, a determination could be made as to whether a tariff condition will continue to be needed.

II. Overview of Comments

The November 20 Order proposed a tariff condition prohibiting anticompetitive behavior or the exercise of market power. The November 20 Order highlighted two ways to exercise market power: physical and economic withholding of output. The November 20 Order stated that withholding supplies can also occur when a seller is able to erect barriers to entry that limit or prevent

[1] 97 FERC ¶ 61,220 (2001).

others from offering supplies to the market or that raise the costs of other suppliers. Examples would include denying, delaying, or requiring unreasonable terms, conditions, or rates for natural gas service to a potential electric competitor in bulk power markets. Some commenters argue that the proposed definition of both economic and physical withholding is vague and overly broad. These commenters generally argue that because the definitions do not consider certain physical, institutional and regulatory constraints, suppliers will be subject to penalties and/or refunds in many cases where they were simply making reasonable business decisions, not exercising market power.

A. Economic Withholding

The November 20 Order defined economic withholding as occurring when a supplier offers output to the market at a price that is above both its full incremental costs and the market price (and thus, the output is not sold).

Some commenters claimed these problems with identifying economic withholding:

• Pay-as-bid markets: Much of the market activity takes place in bilateral markets where the supplier is paid its bid. In those markets, competitive suppliers base their bids on the perceived value of their product, not merely the marginal cost of production.

• Energy-limited units: For units that are constrained by the number of hours they can run, such as hydroelectric facilities or plants facing emissions limitations, the opportunity cost of running in a given hour is the foregone profit in another hour. Commenters argue that suppliers must bid in excess of running costs in order to account for the opportunity costs. Under the Order's definition of economic withholding, such bids would be considered to be engaging in economic withholding and subject to refund.

• Start-up and minimum load costs: For units with start-up costs, it may not be profitable for the plant to provide energy for only a few hours when the market price exceeds its incremental costs. If the revenue during a given time period is not large enough to offset the startup costs as well as the variable running costs, then it would not be profitable for a plant to run for that period. The generator may submit bids in excess of marginal cost in order to recover its startup costs.

B. Physical Withholding

The November 20 Order defined physical withholding as occurring when a supplier fails to offer its output to the market during periods when the market price exceeds the supplier's full incremental costs.

Some commenters claimed these problems with identifying physical withholding:

• In the cases of energy limited units, outage risk and operating risks, if the suppliers cannot bid sufficiently high to avoid running all of their capacity (potentially engaging in economical withholding) they will be forced to simply hold back some or all of their output, even when the market price is greater than their full incremental costs.

• A plant operator needs to be able to decide what is the best time to take a plant out of service or run it at less than full capacity for reliability purposes. If the operator faces the risk of having the unit's revenues subject to refund or having its market-based rate authority revoked, it may be forced to operate the plant in a way that reduces its reliability.

C. Market Price

The November 20 Order stated that anticompetitive behavior or exercises of market power include behavior that raises the market price through physical or economic withholding of supplies.

Some commenters claimed these problems with identifying market price:

• Suppliers can sell into many different markets.

• Markets are differentiated across time (*e.g.,* forward vs. spot) and product (*e.g.,* energy vs. reserves).

D. Economic Consequences

Some commenters contend that entry of new electricity generating facilities, and the value of existing plants, may be reduced because of the risk of refunds imposed as a result of the proposed tariff condition. Potential suppliers may be less interested in building new facilities and those that are interested may not be able to obtain financing or would have to borrow at higher interest rates (due to the increased uncertainty), thus deterring entry.

E. Penalty for Prohibited Behavior

In its November 20 Order, the Commission stated:

Should public utility market participants engage in prohibited behavior, their rates will be subject to increased scrutiny by the Commission, and to potential refunds or such other remedies as may be appropriate. This could result in further conditions or restrictions on their market-based rate authority, including, for example, prospective revocation of the market-based rate authority of the seller or any of its affiliates, or conditions precluding the seller from selling at market-based rates to its affiliates.

1. Comments generally in support:

• The refund condition should be broad enough to allow for refunds from all sellers who profit from anticompetitive behavior regardless of whether a particular seller was engaged in the anticompetitive behavior.

• Reasonable penalties or other sanctions in individual cases in which a supplier has exercised market-power may be warranted.

2. Comments generally in opposition:

• The November 20 Order does not explain or provide examples of how a seller with market-based rate authority can be in a position to abuse market power.

• The Commission should rely on existing monitoring plans and deal with alleged abuses on a case-by-case review.

• As written, the November 20 Order could penalize those who have not committed anticompetitive acts.

3. Modifications proposed by commenters:

• The refund condition should apply only to spot market sales; to wholesale sellers possessing market power; or to generation affiliated with vertically-integrated transmission and distribution assets.

• There should be various exemptions such as: Market dysfunction unrelated to seller misconduct; entities which are too small to exercise market power effectively; forward markets including bilateral sales outside the spot market; power marketers that do not own physical assets; transactions into a market with Commission-approved market monitoring and mitigation measures.

• Some commenters propose that a specific time limit for claiming refunds be instituted while others argue that such a time limit will reward violaters who successfully conceal their anticompetitive behavior.

F. Procedural Issues

Due to concerns regarding the impact of the refund condition, commenters make the following recommendations:

1. Administrative concerns:

• Clarify and specify the requirements for filing a pleading seeking to trigger a refund investigation and the burden of proof in such proceedings; adopt a streamlined-resolution process or expedited complaint-review process.

2. Due process concerns:

• Clarify that sellers will be given the opportunity to respond to charges and explain the basis for their actions (*e.g.,* a trial-type hearing).

3. Concerns regarding regulatory risk and transaction finality:

• Investigate on a case-by-case basis and provide the requisite notice.

• Establish a reasonable period of time for filing a complaint, or commencing an investigation, and a reasonable retroactive refund period.

• To avoid the reduction of the market value of non-rate-base generating stations, such as merchant power plants, establish bright-line procedures for facilities' transfers which will preserve their market-based rate authorizations.

III. Possible Modifications to Tariff Condition

A. Modifications to Definitions

Based on comments regarding the definitions of economic withholding and physical withholding, should we modify the proposed definitions? If so, how?

• Should the term ''full incremental cost'' be clarified (*e.g.,* to include opportunity cost)?

• Should the use of the term ''market price'' be clarified, *e.g.,* as to time (forward vs. spot), product (energy vs. reserves) and geographic market?

• Should environmental, operational and reliability factors be taken into account for purposes of determining whether physical withholding has occurred? If so, how?

B. Limit Applicability to Certain Markets/ Market Participants

• Should we exempt sales in markets that are fully competitive with effective market monitoring; exempt all suppliers in an approved RTO market with Commission-approved bid caps?

• Should we exempt power supply agreements of a specified duration or agreements where parties explicitly waive refund obligations; exempt all bilateral

contracts; create safe harbors (rebuttable presumption of legality) for certain transactions, such as, those with markups at a certain level above marginal cost?

• Should we limit the condition to the specific market(s) in which a seller has market-power, and tailor mitigation rules to those firms given their particular circumstances, while exempting from the rules those generators that are unable or unlikely to exercise market power, such as net buyers, and small, single-plant suppliers?

• Should we set an impact threshold for alleged violations?

C. Procedure Modifications/Applicability Based on Timing

• Should we limit the window of refund potential so that transactions would not be subject to refund unless specifically challenged within a particular timeframe; set a sunset date for the refund condition?

• Should we clarify the type of opportunity that sellers will be given to respond to allegations and explain the basis for their actions (e.g., a trial-type hearing)?

D. Other Suggestions

• Should we impose temporary price caps along with reserve capacity requirements until a competitive market structure emerges?

• Should we tailor mitigation measures to be applied to a particular exercise of market power, class of participant, and sector?

[FR Doc. 02–5693 Filed 3–8–02; 8:45 am]

BILLING CODE 6717–01–P

DEPARTMENT OF ENERGY

Federal Energy Regulatory Commission

Notice of Meeting

March 6, 2002.

The following notice of meeting is published pursuant to section 3(A) of the Government in the Sunshine Act (Pub. L. No. 94–409), 5 U.S.C 552B:

AGENCY HOLDING MEETING: Federal Energy Regulatory Commission.

DATE AND TIME: March 13, 2002, 10:00 a.m.

PLACE: Room 2C, 888 First Street, NE, Washington, DC 20426.

STATUS: Open.

MATTERS TO BE CONSIDERED: Agenda.

*Note—Items listed on the agenda may be deleted without further notice.

CONTACT PERSON FOR MORE INFORMATION: Magalie R. Salas, Secretary. Telephone (202) 208–0400. For a recording listing items stricken from or added to the meeting, call (202) 208–1627.

This is a list of matters to be considered by the Commission. It does not include a listing of all papers relevant to the items on the agenda; however, all public documents may be examined in the reference and information center.

787th—Meeting March 13, 2002, Regular Meeting, 10 a.m.

Administrative Agenda

A–1.
Docket# AD02–1, 000, Agency Administrative Matters

A–2.
Docket# AD02–7, 000, Customer Matters, Reliability, Security and Market Operations

A–3.
Docket# AD01–3, 000, California Infrastructure Update

A–4.
Docket# AD02–12, 000, Northeast RTO Update
Other#s RT01–86, 000, Bangor Hydro-Electric Company; RT01–86, 001, Bangor Hydro-Electric Company; RT01–86, 002, Bangor Hydro-Electric Company; RT01–95, 000, New York Independent System Operator Inc.; RT01–95, 001, New York Independent System Operator Inc.; RT01–95, 002, New York Independent System Operator Inc.; RT01–99, 000, Regional Transmission Organizations; RT01–99, 001, Regional Transmission Organizations; RT01–99, 002, Regional Transmission Organizations; RT01–99, 003, Regional Transmission Organizations

Markets, Tariffs and Rates—Electric

E–1.
Docket# RM01–12, 000, Standard Market Design Scoping

E–2.
Docket# ER02–766, 000, Florida Power & Light Company

E–3.
Docket# ER02–637, 000, Pacific Gas and Electric Company
Other#s ER02–637, 001, Pacific Gas and Electric Company

E–4.
Docket# ER02–405, 000, Entergy Services, Inc.
Other#s ER02–405, 001, Entergy Services, Inc.

E–5.
Docket# ER02–338, 000, Portland General Electric Company
Other#s ER02–338, 001, Portland General Electric Company

E–6.
Docket# ER02–818, 000, LG&E Capital Trimble County LLC

E–7.
Docket# ER01–1740, 000, New York Independent System Operator Inc.
Other#s ER01–1520, 000, New York Independent System Operator Inc.

E–8.
Omitted

E–9.
Docket# ER02–4, 000, Pacific Gas & Electric Company

E–10.
Docket# ER02–358, 000, Pacific Gas and Electric Company
Other#s ER01–2998, 000, Pacific Gas and Electric Company

E–11.
Docket# ER02–782, 000, Florida Power & Light Company

E–12.
Docket# EL99–14, 003, Southwestern Electric Cooperative, Inc. v. Soyland Power Cooperative, Inc.
Other#s EL99–14, 004, Southwestern Electric Cooperative, Inc. v. Soyland Power Cooperative, Inc.

E–13.
Docket# EC02–15, 000, Cinergy Services, Inc., Cinergy Corporation, The Cincinnati Gas & Electric Company, Cinergy Power Investments and PSI Energy, Inc.
Other#s ER02–177, 000, Cinergy Services, Inc., Cinergy Corporation, The Cincinnati Gas & Electric Company, Cinergy Power Investments and PSI Energy, Inc.; ER02–177, 001, Cinergy Services, Inc., Cinergy Corporation, The Cincinnati Gas & Electric Company, Cinergy Power Investments and PSI Energy, Inc.; ER02–177, 002, Cinergy Services, Inc., Cinergy Corporation, The Cincinnati Gas & Electric Company, Cinergy Power Investments and PSI Energy, Inc.; EC02–15, 001, Cinergy Services, Inc., Cinergy Corporation, The Cincinnati Gas & Electric Company, Cinergy Power Investments and PSI Energy, Inc.

E–14.
Docket# EL01–78, 001, LG&E Energy Marketing, Inc. v. Southern Company Services, Inc. and Georgia Transmission Corporation

E–15.
Docket# EL01–65, 001, Californians for Renewable Energy, Inc. v. British Columbia Hydro and Power Authority, Powerex Corporation, Southern Energy Marketing Company (Mirant) and Bonneville Power AdministrationE–16.
Docket# ER02–111, 001, Midwest Independent Transmission System Operator, Inc.

E–17.
Docket# ER02–170, 001, Boston Edison Company

E–18.
Docket# ER02–132, 002, American Transmission Systems, Inc.

E–19.
Docket# EL01–92, 001, Bangor Hydro-Electric Company

E–20.
Docket# ER02–42, 001, GWF Energy

LLC
Other#s ER00–2998, 003, Southern Company Services, Inc.; ER00–2999, 003, Southern Company Services, Inc.; ER00–3000, 003, Southern Company Services, Inc.; ER00–3001, 003, Southern Company Services, Inc.
E–21.
Omitted
E–22.
Docket# EL01–93, 004, Mirant Americas Energy Marketing, L.P., Mirant New England, LLC, Mirant Kendall, LLC and Mirant, LLC v. ISO New England Inc.
Other#s ER00–2998, 004, Southern Company Services, Inc.; ER00–2999, 004, Southern Company Services, Inc.; ER00–3000, 004, Southern Company Services, Inc.; ER00–3001, 004, Southern Company Services, Inc.
E–23.
Docket# ER02–185, 002, New England Power Pool
E–24.
Omitted
E–25.
Omitted
E–26.
Omitted
E–27.
Docket# ER02–79, 001, Southern California Edison Company
E–28.
Docket# ER01–3009, 003, New York Independent System Operator, Inc.
Other#s ER01–3009, 004, New York Independent System Operator, Inc.; ER01–3153, 003, New York Independent System Operator, Inc.; ER01–3153, 004, New York Independent System Operator, Inc.; EL00–90, 003, Morgan Stanley Capital Group, Inc. v. New York Independent System Operator, Inc.; EL00–90 004 Morgan Stanley Capital Group, Inc. v. New York Independent System Operator, Inc.
E–29.
Docket# EG02–78, 000, Duke Energy Hot Spring, LLC
E–30.
Omitted
E–31.
Docket# ER02–645, 000, American Transmission Company LLC
E–32.
Docket# EL01–87, 000, South Eastern Energy Corporation and Morgan Stanley Capital Group, Inc. v. City of Dalton, Georgia, Georgia Transmission Corporation, Georgia Power Company and the Municipal Electric Authority of Georgia
E–33.
Docket# EL01–90, 000, Consumers Union of United States, Inc.
E–34.
Docket# EL02–46, 000, Generator Coalition v. Entergy Services, Inc.
Other#s ER01–2201, 000, Generator Coalition v. Entergy Services, Inc.
E–35.
Omitted
E–36.
Omitted
E–37.
Docket# EL02–47, 000, Wisconsin Public Power, Inc. v. Wisconsin Power & Light Company
Other#s EL02–52, 000, Municipal Wholesale Power Group v. Wisconsin Power & Light Company
E–38.
Docket# RT02–2, 001, State-Federal Regional RTO Panels
Other#s RM98–1, 003, Regulations Governing Off-the-Record Communications; RM99–2, 003, Regional Transmission Organizations; EC99–80, 017, American Electric Power Service Company; ER99–3144, 017, Alliance Companies; RM00–10, 001, Open Access Same-Time Information System Phase II; ER00–3295, 004, International Transmission Company; RT01–1, 001, NB Power Corporation, Nova Scotia Power Incorporated, Maritime Electric Company, Limited, Maine Electric Company, Maine Public Service Company and Eastern Maine Electric Cooperative, Inc.; RT01–2, 003, PJM Interconnection, L.L.C., Allegheny Electric Cooperative, Inc., Atlantic City Electric Company, Baltimore Gas & Electric Company, Delmarva Power & Light Company, Jersey Central Power & Light Company, Metropolitan Edison Company, PECO Energy Company, Pennsylvania Electric Company, Potomac Electric Power Company, PPL Electric Utilities Corporation, Public Service Electric & Gas Company and UGI Utilities, Inc.; RT01–10, 002, Allegheny Power; RT01–13, 001, Duquesne Light Company; RT01–15, 003, Avista Corporation, Montana Power Company, Nevada Power Company, Portland General Electric Company, Puget Sound Energy, Inc. and Sierra Pacific Power Company; RT01–26, 002, Northern Indiana Public Service Company; RT01–34, 005, Southwest Power Pool, Inc.; RT01–35, 004, Avista Corporation, Bonneville Power Administration, Idaho Power Company, Montana Power Company, Nevada Power Company, PacifiCorp, Portland General Electric Company and Sierra Power Company; RT01–37, 002, Dayton Power and Light Company; RT01–44, 002, Arizona Public Service Company, Desert STAR, Inc., El Paso Corporation, Public Service Company of Colorado, Public Service Company of New Mexico, Texas-New Mexico Power Company and Tucson Electric Power Company; RT01–67, 004, GridFlorida LLC, Florida Power & Light Company, Florida Power Corporation and Tampa Electric Company; RT01–74, 006, Carolina Power & Light Company, Duke Energy Corporation, GridSouth Transco, LLC and South Carolina Electric & Gas Company; RT01–75, 006, Entergy Services, Inc.; RT01–77, 003, Southern Company Services, Inc.; EL01–80, 002, National Grid USA; RT01–82, 001, San Diego Gas & Electric Company; RT01–83, 001, Pacific Gas & Electric Company; RT01–84, 002, Illinois Power Company; RT01–85, 006, California Independent System Operator Corporation; RT01–86, 002, Bangor Hydro-Electric Company, Central Maine Power Company, ISO New England Inc., National Grid USA, Northeast Utilities Service Company, United Illuminating Company and the Vermont Electric Power Company, Inc.; RT01–87, 004, Midwest Independent System Operator, Inc.; RT01–88, 013, Ameren Corporation, American Electric Power Service Corporation, American Transmission Systems, Inc., Appalachian Power Company, Central Illinois Public Service Company, Cleveland Electric Illuminating Company, Columbus Southern Power Company, Commonwealth Edison Company of Indiana, Inc., Commonwealth Edison Company, Consumers Energy Company, Dayton Power and Light Company, Detroit Edison Company, Exelon Corporation, FirstEnergy Corporation, Illinois Power Company, Indiana Michigan Power Company, Kentucky Power Company, Kingsport Power Company, Ohio Edison Company, Ohio Power Company, Pennsylvania Power Company, Toledo Edison Company, Union Electric Company, Virginia Electric & Power Company and Wheeling Power Company; RT01–89, 001, Citizens Communications Company; RT01–90, 001, Concord Electric Company; RT01–92, 001, Southern California Edison Company; RT01–93, 001, California Power Exchange Corporation;

RT01–94, 002, NSTAR Services Company; RT01–95, 002, New York Independent System Operator, Inc., Central Hudson Gas & Electric Corporation, Consolidated Edison Company of New York, Inc., Niagara Mohawk Power Corporation, Orange & Rockland Utilities, Inc. and Rochester Gas and Electric Corporation; RT01–96, 001, Alliant Energy Corporate Services, Inc., American Transmission Company, LLC, Central Illinois Light Company, Cincinnati Gas & Electric Company, Cinergy Corporation, Hoosier Energy Rural Electric Cooperative, Inc., IES Utilties, Inc., Interstate Power Company, Kentucky Utilities Company, Louisville Gas and Electric Company, Northern States Power Company (Minnesota), Northern States Power Company (Wisconsin), PSI Energy, Inc., Southern Indiana Gas and Electric Company and Union Light, Heat & Power Company; RT01–98, 003, PJM Interconnection, L.L.C., Monongahela Power Company, Potomac Edison Company and West Penn Power Company; RT01–99, 003, Regional Transmission Organizations; RT01–100, 002, Regional Transmission Organizations; RT01–101, 002, International Transmission Company and DTE Energy Company; EL01–116, 001, Montana-Dakota Utilities Company; ER01–123, 006, Illinois Power Company; EC01–137, 001, DTE Energy Company and International Transmission Company; EC01–146, 002, International Transmission Company and DTE Energy Company; ER01–2992, 001, Commonwealth Edison Company; ER01–2993, 001, Virginia Electric and Power Company; ER01–2995, 001, American Electric Power Company; ER01–2997, 001, Dayton Power and Light Company; ER01–2999, 001, Illinois Power Company; ER01–3000, 002, International Transmission Company and DTE Energy Company; RT02–1, 001, Arizona Public Service Company, El Paso Electric Company, Public Service Company of New Mexico, Tucson Electric Power Company and WestConnect RTO, LLC; ER02–108, 001, Midwest Independent Transmission System Operator, Inc.

E–39.
Docket# ER01–3141, 001, American Electric Power Service Corporation: Other#s ER01–3141, 002, American Electric Power Service Corporation: ER01–3141, 003, American Electric Power Service Corporation

E–40.
Docket# ER01–2584, 000, Northeast Utilities Service Company Other#s ER01–2584, 001, Northeast Utilities Service Company

E–41.
Docket# EL02–35, 000, Niagara Mohawk Power Corporation v. Rochester Gas and Electric Corporation

E–42.
Docket# TX97–8, 000, PECO Energy Company

Miscellaneous Agenda

M–1.
Reserved

Markets, Tariffs and Rates—Gas

G–1.
Docket# RP00–336 002 El Paso Natural Gas Company
Other#s RP00–139, 000, ONEOK Energy Marketing & Trading Company, L.P.; RP01–484, 000, Aera Energy LLC; RP01–486, 000, Apache Nitrogen Products, Inc.

G–2.
Docket# RP02–158, 000, Viking Gas Transmission Company

G–3.
Docket# PR02–3, 000, Bay Gas Storage Company, Ltd.

G–4.
Docket# RP00–335, 000, Black Marlin Pipeline Company
Other#s RP01–414, 000, Black Marlin Pipeline Company

G–5.
Docket# RP00–341, 000, Egan Hub Partners, L.P.
Other#s RP00–341 001, Egan Hub Partners, L.P.; RP01–48, 000, Egan Hub Partners, L.P.

G–6.
Docket# RP00–401, 000, Enbridge Pipelines (AlaTenn) Inc.
Other#s RP01–4, 001, Enbridge Pipelines (AlaTenn) Inc.

G–7.
Docket# RP00–400, 000, Enbridge Pipelines (Midla) Inc.
Other#s RP01–5, 001, Enbridge Pipelines (Midla) Inc.

G–8.
Omitted

G–9.
Docket# CP95–168, 006, Sea Robin Pipeline Company

G–10.
Omitted

G–11.
Docket# RP02–122, 000, Kinder Morgan Interstate Gas Transmission, LLC

G–12.
Docket# RP01–612, 001, ANR Pipeline Company
Other#s RP01–612, 000, ANR Pipeline Company

G–13.
Docket# PR01–18, 001, Northwest Natural Gas Company
Other#s PR01–18, 000, Northwest Natural Gas Company

G–14.
Docket# RP98–53, 024, Kinder Morgan Interstate Gas Transmission LLC
Other#s RP98–53, 015, Kinder Morgan Interstate Gas Transmission LLC; RP98–53, 021, Kinder Morgan Interstate Gas Transmission LLC; RP98–53, 023, Kinder Morgan Interstate Gas Transmission LLC

G–15.
Docket# RP00–340, 000, Gulf South Pipeline Company, LP
Other#s RP00–340, 001, Gulf South Pipeline Company, LP; RP00–340, 002, Gulf South Pipeline Company, LP; RP01–7, 000, Gulf South Pipeline Company, LP

G–16.
Docket# RP00–461, 000, Western Gas Interstate Company

Energy Projects—Hydro

H–1.
Omitted

H–2.
Docket# P–2724, 028, City of Hamilton, Ohio

H–3.
Docket# P–2188, 073, PPL Montana, LLC

H–4.
Docket# P–2342, 013, PacifiCorp

H–5.
Docket# DI00–4, 001, Leonard Murphy

H–6.
Docket# EL02–10, 000, Hydro Investors, Inc. v. Trafalgar Power Inc., Christine Falls of New York, Inc., Franklin Industrial Complex, Inc., Aetna Life Insurance Company, Algonquin Power Corporation, Algonquin Power Income Fund and Algonquin Power Fund (Canada)
Other#s P–3760, 011, Franklin Industrial Complex, Inc.; P–4639, 021, Christine Falls of New York, Inc.; P–4639, 023, Christine Falls of New York, Inc.; P–4639, 026, Christine Falls of New York, Inc.; P–4900, 063, Trafalgar Power, Inc.; P–4900, 066, Trafalgar Power, Inc.; P–4900, 068, Trafalgar Power, Inc.; P–5000, 059, Trafalgar Power, Inc.; P–5000, 063, Trafalgar Power, Inc.; P–5000, 064, Trafalgar Power, Inc.; P–6878, 008, Trafalgar Power, Inc.; P–6878, 010, Trafalgar Power, Inc.; P–9685, 024, Trafalgar Power, Inc.; P–9685, 026, Trafalgar Power, Inc.;

P–9709, 051, Trafalgar Power, Inc.; P–9709, 054, Trafalgar Power, Inc.; P–9709, 057, Trafalgar Power, Inc.; P–9821, 092, Trafalgar Power, Inc.; P–9821, 095, Trafalgar Power, Inc.; P–9821, 097, Trafalgar Power, Inc.; EL99–26, 000, Hydro Investors, Inc. v. Trafalgar Power Inc., Christine Falls of New York, Inc., Franklin Industrial Complex, Inc., Aetna Life Insurance Company, Algonquin Power Corporation, Algonquin Power Income Fund and Algonquin Power Fund (Canada)

H–7.
Docket# P–2016, 044, City of Tacoma, Washington
H–8.
Docket# P–2145, 042, Public Utility District No. 1 of Chelan County, Washington
Other#s P–943, 075, Public Utility District No. 1 of Chelan County, Washington
H–9.
Omitted
H–10.
Docket# DI97–8, 002, Georgia-Pacific Corporation
Other#s DI97–9, 002, Georgia-Pacific Corporation; P–2618, 011, Georgia-Pacific Corporation; P–2660, 010, Georgia-Pacific Corporation

Energy Projects—Certificates

C–1.
Docket# CP01–176, 000, Georgia Strait Crossing Pipeline LP
Other#s CP00–179, 000, Georgia Strait Crossing Pipeline LP; CP01–176, 001, Georgia Strait Crossing Pipeline LP; CP01–176, 002, Georgia Strait Crossing Pipeline LP; CP01–177, 000, Georgia Strait Crossing Pipeline LP; CP01–178, 000, Georgia Strait Crossing Pipeline LP
C–2.
Docket# CP02–79, 000, Desert Crossing Gas Storage and Transportation System LLC
C–3.
Docket# CP02–74, 000, Reef International, L.L.C.
C–4.
Docket# CP01–76, 001, Cove Point LNG Limited Partnership
Other#s CP01–77, 002, Cove Point LNG Limited Partnership; CP01–156, 002, Cove Point LNG Limited Partnership; RP01–217, 002, Cove Point LNG Limited Partnership
C–5.
Docket# CP01–87, 003, Dominion Transmission, Inc.
C–6.
Docket# CP00–232, 003, Iroquois Gas Transmission System, L.P.
Other#s CP00–232, 000, Iroquois Gas Transmission System, L.P.
C–7.
Docket# RM01–7, 000, Policy on Certificates of Public Convenience and Necessity for Gas Transmission Facilities in the Offshore Southern Louisiana Area

Magalie R. Salas,
Secretary.

[FR Doc. 02–5852 Filed 3–8–02; 8:45 am]

BILLING CODE 6717–01–P

DEPARTMENT OF ENERGY

Federal Energy Regulatory Commission

[Docket No. AD02–1–000]

Federal Energy Regulatory Records Information System; Notice of Intent To Modify the Commission Issuance Posting System, Records Information Management System and Docket Sheet System

March 5, 2002.

The Federal Energy Regulatory Commission (the Commission), hereby gives notice that it intends to modify its Commission Issuance Posting System (CIPS), Records Information Management System (RIMS) and its Docket Sheet System on the web. The Commission intends to combine these three online systems into a single online system called the Federal Energy Regulatory Records Information System (FERRIS).

In response to many suggestions regarding the Commission's online systems, the Commission plans to replace its existing systems with newer, more robust technology. Ultimately, the new system will provide users with a single point of access with better search capability and additional functions. The Commission intends the new system to result in increased performance and reliability for the Commission's staff and public users.

This notice announces the coming availability of the new system. The Commission will make FERRIS available for testing and comment before placing the system into full production. We encourage the public and the Commission's staff to try the new system and comment on it through the Content Master e-mail link, *contentmaster@ferc.gov*.

The Commission is making every effort to incorporate all functions currently in the existing systems into FERRIS. Appendix A provides a cross reference between the existing functions in CIPS, RIMS and the Docket Sheets and the corresponding function in FERRIS. Appendix B discusses the few features that will not be programmed into FERRIS. The Commission will make some modification to the file formats in which the documents will be available. Details appear in Appendix B.

A test version of FERRIS will be made available to the public through the Commission's Web site at *www.ferc.gov* in Mid March. The full production version of FERRIS will be available in early April. Please refer to the Commission's website for the announcement of the exact dates the system will be available. To familiarize the public with the features of the new system, demonstrations will be conducted in Room 3M–2A&B at the Commission's headquarters on March 12, 2002, at 2:00 pm and on March 18, 2002, at 2:00 pm. While it is not mandatory, it is preferable to pre-register for the demonstrations. Pre-registration will facilitate passing through security. To pre-register, send an e-mail with your name, company affiliation and the date of the demonstration you will attend to *contentmaster@ferc.gov* or fax to (202) 208–2320 or call the Public Reference Room at (202) 208–1371, then press 0.

Magalie R. Salas,
Secretary.

Appendix A

CROSSWALK OF FUNCTIONALITY

Function in CIPS	Function in new system
Three separate search screens	One general search screen and one advanced search screen.
Docket Number Search	Same.
Date Range	Issued Date will be referred to as Document date. Other than that, no change.
Radio buttons for 1 day, 1 week, 30 days, 120 days, year search	Replaced with text boxes for user supplied number of days, months or years. The default is 1 day, 1 month or 1 year.
Text Search	Text Search is now powered by a much more robust search engine.
Libraries of Hydro, Oil, Gas, Electric, Rulemaking and Miscellaneous	No change except the miscellaneous library is called general.

CROSSWALK OF FUNCTIONALITY—Continued

Function in CIPS	Function in new system
Sort Returns by rank or date, specify maximum rows returned and rows per page returned.	From the search page you may specify the number of documents per page. From the results page, you may sort or resort your results by rank or date. You may choose to display the summary or hide the summary. You may choose to display 10 hits or 200 hits.
Company Name (This feature in CIPS searches the description from left to right depending on the number of words typed in the search field, e.g., a search term of Tennessee will find Tennessee Gas Pipeline but will not find East Tennessee Natural Gas.).	From the General Search, de-select the option ''full text'' so only the description is selected. Type the name or portion of the name of the company you wish to find in the text search field. The entire description will be searched for the search term or terms. From the Advanced Search, type in the name of the company in the author/recipient affiliation field.
Type/Prefix	Type the prefix in the docket number search field. A guide with the docket prefixes will be provided.
Download Selected Items in a compressed file	The download option is available in the Action drop down list.

Function in RIMSWeb	Function in new system
Docket Search	Docket Search on the General Search page permits full or partial docket number search; multiple subdockets may be entered.
Accession Number Search	Unchanged on the Advanced Search page.
Author/Recipient	Unchanged on the Advanced Search page.
Class/Type	On the General Search page, permits up to four class and four type selections.
FERC Cite #; Fed Court Cite, Opinion	Unchanged on the Advanced Search page.
Related Doc ID	Unchanged on the Advanced Search page.
Order	Unchanged on the Advanced Search page.
Tariff/Rate	Eliminated; See discussion above.
Daily Filings	On the general search page select submittal or issuance, and select the radio button for the previous day, then select the library.
Libraries of Gas/Oil, Hydro, Electric, General	Libraries of Natural Gas, Oil, Hydro, Electric, Rulemaking, General.
Document Information Page	Retained.
Available File Formats Page	Retained.

Appendix B

Features Not in FERRIS and File Format Changes in FERRIS

As the Commission begins to phase in the full system, we will be eliminating the ASCII text version of issuances. Instead, we will provide the files in the file format of the software in which they are created and portable document format (PDF) [1]. Our decision is based on primarily two reasons. First, as the Commission's issuances have become more complex, including tables of contents, embedded spreadsheets, tables, photographs, *etc.,* the conversion to ASCII has become inaccurate. The PDF version of the files, while still searchable, will preserve formatting, fonts, *etc.*

The second reason for our determination relates to the Commission's practice of scanning issuances and creating an image (in Tagged Image Format (TIF)). Since the inception of its electronic filing program in the fall of 2001, the Commission has converted all files submitted electronically into PDF. This practice worked well. In consequence, the Commission no longer believes it is necessary to convert the files containing issuances into TIF files. Similarly, the Commission has historically scanned a paper version of the Form 1 into RIMS in tagged image format, TIF. The Commission currently receives the Form 1 in electronic format. To make it easier to access the Form 1 from FERRIS, Form 1 data will be converted to a PDF file.

Currently, each day the Commission compresses the files posted that day to CIPS for easy downloading. One compressed file contains all files posted during the day. Other compressed files contain all files posted to each library that day. On some occasions, the Commission posted issuances to CIPS the morning following the date of issuance due to the late hour of issuance. The compressed files had already been created for the day necessitating posting some files the following morning. Henceforth, the Commission will focus its time and energies to adding issuances to FERRIS the day of issuance to the greatest extent possible. To further this goal, the Commission will no longer create the compressed files. FERRIS will allow users to download the day's issuances in a self-extracting compressed file that the user creates himself. See Appendix C for details on compressing and downloading files in FERRIS.

On CIPS today, users can save certain search parameters for reuse during a later session. CIPS uses a permanent ''cookie'' file to provide this feature. ''Cookies'' are text files placed on the customer's computer hard drive by the website computer. When the customer is on our website, the agency can access the ''cookie'' file. There are two kinds of ''cookies.'' A session ''cookie'' is one that continues in operation only for the duration of the browser session—when the user shuts down the browser, the ''cookie'' is released and goes away. A persistent ''cookie,'' however, continues in operation after the close of the individual session. Shutting down the browser will cause the ''cookie'' to be written into a special ''cookie'' file on the user's computer, so that the next time the user visits the website that generated the ''cookie,'' the ''cookie'' will be sent to the website's server again.

On June 22, 2000, the Office of Management and Budget (OMB) issued a memorandum regarding privacy policies and data collection by agencies on the internet, clarifying the policy on use of ''cookies'' by government agencies.[2] OMB's June 22 Memorandum states that:

[t]he presumption should be that ''cookies'' will not be used at Federal websites. Under this new Federal policy, ''cookies'' should not be used at Federal websites, or by contractors when operating websites on behalf of agencies, unless, in addition to clear and conspicuous notice, the following conditions are met: a compelling need to gather the data on the site; appropriate and publicly disclosed privacy safeguards for handling of information derived from ''cookies''; and personal approval by the head of the agency.

[1] PDF is a text format created by Adobe Systems Incorporated and designed to be portable across computer platforms.

[2] OMB Memorandum 00–13, ''Privacy Policies and Data Collection on Federal Web Sites'' (June 22 Memorandum). The complete text of the June 22 Memorandum can be found at *http://www.whitehouse.gov/omb/memoranda/m00–13.html.*

Subsequently, OMB interpreted its memorandum to apply only to persistent ''cookies,'' and not to session ''cookies.'' [3] While the Commission will continue to use session ''cookies,'' to bring the Commission's systems into full compliance with OMB's memorandum, the systems will not use persistent ''cookies.'' As a consequence, the ability of the user to retain search parameters in CIPS will not be replicated in FERRIS.

Currently, RIMS contains a search entitled Tariff/Rate which is intended to provide a search of electric tariffs and rate schedules. The Commission never fully implemented this feature in RIMS. Further, on April 20, 2001, the Commission issued a Notice of Inquiry in Docket No. RM01–5–000 [4] inviting comments on selected issues related to the filing of electronic tariffs in order to develop a notice of proposed rulemaking, and thereafter a final rule, with respect to the filing of electronic tariffs. In light of the Commission's intention to pursue the filing of electronic tariffs and the fact that the electric tariff portion of RIMS was not fully formed, FERRIS will not contain the Tariff/Rate feature.

Appendix C

Downloading Files to a Self-Extracting Compressed File

To download all files posted on a specific day, select the previous day by clicking on the appropriate radio button or type in a specific date. Select only issuances if you wish to limit your results to issuances. Be sure to select 200 Results per Page. You may limit your results to a specific library or libraries by clicking on the appropriate box or boxes. From the results page select ''select all'' from the Search Options drop down menu. From the Action drop down menu select download, then press Go. Using this technique, all files from any results list may be downloaded in a self-extracting compressed file including the day's postings in any one of the libraries. In addition, the system includes a feature called the Request List. Select items from your results list, use the Action drop down menu to add the selected files to your Request List. You may do as many searches as you wish, adding to your Request List as you go. When you are finished, you may download the files in your Request List in a single self-extracting compressed file.

[FR Doc. 02–5717 Filed 3–8–02; 8:45 am]

BILLING CODE 6717–01–P

[3] Letter from John T. Spotila, Administrator, Office of Information and Regulatory Affairs, OMB, to Roger Baker, Chief Information Officer, U.S. Department of Commerce (September 5, 2000).

[4] Electronic Tariff Filings, 66 FR 15673 (March 20, 2001), 94 FERC ¶ 61,270 (March 14, 2001), III FERc Stats. & Regs. Notices ¶ 35,538 (March 14, 2001).

ENVIRONMENTAL PROTECTION AGENCY

[FRL–7156–2]

Agency Collection Activities: Proposed Collection; Comment Request; Investigations into Possible Noncompliance of Motor Vehicles

AGENCY: Environmental Protection Agency (EPA).

ACTION: Notice.

SUMMARY: In compliance with the Paperwork Reduction Act (44 U.S.C. 3501 *et seq.*), this document announces that EPA is planning to submit the following continuing Information Collection Request (ICR) to the Office of Management and Budget (OMB): Investigations into Possible Noncompliance of Motor Vehicles; EPA ICR Number 222.06; OMB Number 2060–0086 expiring June 30, 2002. Before submitting the ICR to OMB for review and approval, EPA is soliciting comments on specific aspects of the proposed information collection as described below.

DATES: Comments must be submitted on or before May 10, 2002.

ADDRESSES: Interested persons may obtain copy of the ICR without charge from: United States Environmental Protection Agency, Certification and Compliance Division; ATTN: Richard W. Nash, 2000 Traverwood Dr, Ann Arbor MI 48105.

FOR FURTHER INFORMATION CONTACT: Richard W. Nash, 2000 Traverwood Dr, Ann Arbor, MI 48105. (734) 214–4412; nash.dick@epa.gov

SUPPLEMENTARY INFORMATION:

Affected entities: Entities potentially affected by this action are owners/lessees of motor vehicles.

Title: Investigations into Possible Noncompliance of Motor Vehicles; EPA ICR Number 222.06; OMB Number 2060–0086 expiring June 30, 2002.

Abstract: As part of an integrated compliance program, EPA occasionally needs to evaluate the emission performance of in-use motor vehicles. In order to perform this function, EPA must solicit certain information from the vehicle owner/lessee. Participation in the information survey, as well as the vehicle evaluation, is strictly voluntary. Typically, a group of 25 potential participants is identified. They are asked to return a postcard indicating their willingness to participate and if so, to verify some limited vehicle information. They are also asked when it would be suitable to contact them. Those willing to participate are called and asked about a half dozen questions concerning vehicle condition and maintenance. Depending on owner/lessee response, additional groups of potential participants may be contacted until a sufficient number of vehicles has been obtained.

Information collected is used to assure that vehicles procured meet certain criteria. For example, since a manufacturer's responsibility to recall passenger cars is limited to 10 years of age or 100,000 miles of use, vehicles tested to establish potential recall liability must also meet those criteria. Other testing programs and vehicle types have different criteria. All information is publicly available.

The previous description generally describes how EPA obtains information on in-use passenger cars and light trucks from individual owners and lessees. Heavy duty trucks, those commonly referred to as over ''¾ ton'' capacity, are usually employed commercially; typically they are part of a ''fleet'' of identical (or very similar) vehicles. Consequently, EPA employs a slightly different method to obtain them. Potential owners/lessees can be found in registrations lists; engine manufacturers will also supply identities of their customers. Occasionally, a fleet operator will contact EPA and volunteer to participate. Once potential sources are identified, EPA will make a brief telephone call to the fleet managers to ascertain if they wish to participate. If the response is positive, EPA will visit the fleet to inspect vehicles and review maintenance records. (Fleets typically keep very good records on each vehicle; EPA can quickly determine if a particular unit is acceptable.) A single fleet can supply multiple vehicles and, typically, is quite willing to participate. Therefore, EPA makes far fewer inquiries than with individual owners of light vehicles. Based on comments, EPA may decide to address light and heavy duty vehicles separately.

EPA uses several techniques in selecting the class or category of motor vehicles to be evaluated. First, if based on other information (*e.g.,* defect reports, service bulletins) there is a suspicion that a problem exists; EPA may target a particular group. Second, groups with a large number of vehicles have potential for significant air quality effects; they may be selected for that reason. New emission control technology without a proven history is another factor in making selections. Finally, some vehicle classes are selected on a random basis.

An agency may not conduct or sponsor, and a person is not required to respond to, a collection of information

unless it displays a currently valid OMB control number. The OMB control numbers for EPA's regulations are listed in 40 CFR part 9 and 48 CFR chapter 15. The EPA would like to solicit comments to:

(i) Evaluate whether the proposed collection of information is necessary for the proper performance of the functions of the agency, including whether the information will have practical utility;

(ii) Evaluate the accuracy of the agency's estimate of the burden of the proposed collection of information, including the validity of the methodology and assumptions used;

(iii) Enhance the quality, utility, and clarity of the information to be collected; and

(iv) Minimize the burden of the collection of information on those who are to respond, including through the use of appropriate automated electronic, mechanical, or other technological collection techniques or other forms of information technology, *e.g.,* permitting electronic submission of responses.

Burden Statement: EPA estimates that approximately 1800 will be contacted, on average they will spend approximately 20 minutes each responding for a total burden of approximately 600 hours. The average reflects those who decline to participate (who will spend a short time reading the solicitation letter and discard it) as well as those who participate and will be asked a few additional questions about vehicle condition and maintenance. This collection is entirely voluntary, there are no recordkeeping requirements. Burden means the total time, effort, or financial resources expended by persons to generate, maintain, retain, or disclose or provide information to or for a Federal agency. This includes the time needed to review instructions; develop, acquire, install, and utilize technology and systems for the purposes of collecting, validating, and verifying information, processing and maintaining information, and disclosing and providing information; adjust the existing ways to comply with any previously applicable instructions and requirements; train personnel to be able to respond to a collection of information; search data sources; complete and review the collection of information; and transmit or otherwise disclose the information.

Dated: March 4, 2002

Robert Brenner,

Acting Assistant Administrator, Office of Air and Radiation.

[FR Doc. 02–5740 Filed 3–8–02; 8:45 am]

BILLING CODE 6560–50–M

ENVIRONMENTAL PROTECTION AGENCY

[FRL–7156–4]

Agency Information Collection Activities: Proposed Collection; Comment Request; National Emission Standards for Hazardous Air Pollutants (NESHAPs): Radionuclides

AGENCY: Environmental Protection Agency (EPA).

ACTION: Notice.

SUMMARY: In compliance with the Paperwork Reduction Act (44 U.S.C. 3501 *et seq.*), this notice announces that EPA is planning to submit the following continuing Information Collection Request (ICR) to the Office of Management and Budget (OMB): National Emission Standards for Hazardous Air Pollutants (NESHAPs): Radionuclides. The EPA ICR Number is 1100.11, and the OMB control number is 2060–0191 which is expiring on June 30, 2002. Before submitting the ICR to OMB for review and approval, EPA is soliciting comments on specific aspects of the proposed information collection as described below.

DATES: Comments must be submitted on or before May 10, 2002.

ADDRESSES: Office of Radiation and Indoor Air, Radiation Protection Division, Center for Waste Management, Environmental Protection Agency, 6608J, 1200 Pennsylvania Avenue, NW., Washington, DC 20460. Copies of the ICR may be obtained from Eleanor Thornton-Jones at the U.S. Environmental Protection Agency, Center for Waste Management, Radiation Protection Division, Office of Radiation and Indoor Air, 1200 Pennsylvania Avenue, NW., Washington, DC 20460–0001; Mail code: 6608J or by e-mail: *thornton.eleanord@epa.gov* or by phone (202) 564–9773.

FOR FURTHER INFORMATION CONTACT: Eleanor Thornton-Jones, telephone: (202) 564–9773, fax: (202) 565–2065, e-mail: *thornton.eleanord@epa.gov.*

SUPPLEMENTARY INFORMATION:

Affected Entities: Entities affected by this action are those which own or operate Department of Energy (DOE) facilities, elemental phosphorus plants, Non-DOE federal facilities and phosphogypsum stacks, underground uranium mines and uranium mill tailings piles.

Title: National Emission Standards for Hazardous Air Pollutants: Radionuclides, OMB No. 2060–0191, expiring 6/30/02.

Abstract: On December 15, 1989 pursuant to section 112 of the Clean Air Act as amended in 1977 (42 U.S.C. 1857), EPA promulgated NESHAPs to control radionuclide emissions from several source categories. The regulations were published in 54 FR 51653, and are codified at 40 CFR part 61, subparts B, H, I, K, R, T, and W. Due to petitions for reconsideration, EPA rescinded subpart T (July 15, 1994, 59 FR 36280) as it applies to owners and operators of uranium mill tailings disposal sites licensed by the Nuclear Regulatory Commission (NRC) or an affected Agreement State.

Currently, EPA has prepared a final rule amending subparts H and I; National Emission Standards for Emissions of Radionuclides Other Than Radon from Department of Energy Facilities and the National Emission Standards for Radionuclide Emissions from Federal Facilities Other Than Nuclear Regulatory Commission Licensees and Not Covered by Subpart H. (We are awaiting the Administrator's signature and expect this final rule amendment to be published in the **Federal Register** by the end of March 2002.) This amendment is a technical update to ensure that the best available science is being used to monitor radionuclide emissions from DOE and other federal facilities. Subparts H and I require emission sampling, monitoring and calculations to identify compliance with the standard. As applicable, subpart H and subpart I require sampling and monitoring of radionuclide air emissions in accordance with the guidance presented in the American National Standard Institute's (ANSI) Guide to Sampling Airborne Radioactive Materials in Nuclear Facilities, ANSI N13.1–1969. In 1999, this ANSI standard was revised and replaced by the new ANSI/HPS N13.1–1999 standard, entitled ''Sampling and Monitoring Releases of Airborne Radioactive Substances from the Stacks and Ducts of Nuclear Facilities.'' The standard for both subparts H and I requires that emissions of radionuclides to the ambient air shall not exceed those amounts that would cause any member of the public to receive in any year an effective dose equivalent of 10 millirem/yr. Also, for non-DOE federal facilities, emissions of iodine shall not exceed an effective dose equivalent of 3 millirem/yr to any member of the public.

The new ANSI standard provides regulated facilities greater flexibility in designing sampling systems while preserving protection of human health and the environment. The DOE facilities and non-DOE federal facilities other

than NRC licensees (such as Naval, Department of Defense, and other research and industrial facilities) will be required to adopt these updated sampling methods for any newly constructed or modified source requiring continuous sampling. Existing stacks not undergoing modification will not be required to upgrade to the new sampling standards; however, more rigorous inspections will be required to ensure that all sampling systems—both new and existing—function as intended.

EPA also has rescinded subpart I as it applies to NRC-licensed facilities, that became effective on December 30, 1996 (61 FR 68971). EPA's decision to rescind subpart I was based on NRC's promulgation of the constraint rule, 10 CFR part 20 (61 FR 65120, December 10, 1996), requiring licensees to establish a dose constraint for air emissions of radionuclides of 10 mrem/year total effective dose equivalent to members of the public. A 1992 survey conducted by EPA and data collected during the implementation of subpart I found no facility exceeding EPA's 10 mrem/yr effective dose equivalent standard. The existing subpart I of the radionuclide NESHAPs now only applies to non-DOE federal facilities not licensed by NRC.

Information is being collected pursuant to Federal regulation 40 CFR part 61. The pertinent sections of the regulation for reporting and record keeping are listed below for each source category:

Department of Energy Facilities—Sections 61.93, 61.94, 61.95
Elemental Phosphorous—Sections 61.123, 61.124, 61.126
Non-DOE Federal Facilities—Sections 61.103, 61.104, 61.105, 61.107
Phosphogypsum Stacks—Sections 61.203, 61.206, 61.207, 61.208, 61.209
Underground Uranium Mines—Sections 61.24, 61.25
Uranium Mill Tailings Piles—Sections 61.223, 61.224, 61.253, 61.254, 61.255,

Data and information collected is used by EPA to ensure that public health continues to be protected from the hazards of airborne radionuclides by compliance with NESHAPs. If the information were not collected, it is unlikely that potential violations of the standards would be identified and corrective action would be initiated to bring the facilities back into compliance. Compliance is demonstrated through emission testing and/or dose calculation. Results are submitted to EPA annually for verification of compliance and maintained for a period of 5 years. An agency may not conduct or sponsor, and a person is not required to respond to a collection of information unless it displays a currently valid OMB control number. The OMB control numbers for EPA's regulations are listed in 40 CFR part 9, and 48 CFR Chapter 15.

The EPA would like to solicit comments to:

(i) Evaluate whether the proposed collection of information is necessary for the proper performance of the functions of the agency, including whether the information will have practical utility;

(ii) Evaluate the accuracy of the agency's estimate of the burden of the proposed collection of information;

(iii) Enhance the quality, utility, and clarity of the information to be collected; and

(iv) Minimize the burden of the collection of information on those who are to respond, including through the use of appropriate automated collection techniques or other forms of information technology, e.g., permitting electronic submission of responses.

Burden Statement: Non-DOE Federal Facilities—Facilities may use written procedures or the COMPLY computer program for demonstrating compliance. These procedures and the COMPLY program were designed to reduce the burden on smaller facilities for determining compliance. The activities of the various respondents consist of reading and understanding the regulatory provisions and compliance procedures, identifying and listing input data, performing computer runs, preparing a report, and storing and maintaining data.

The estimated burden for each respondent is 32 hours per response. This estimate is based on experience gained in preparing radionuclide NESHAPs enforcement and compliance guidance material and in demonstrating the use of EPA's COMPLY computer program to the uninitiated.

40 CFR 61 Facilities—The estimates of this ICR renewal includes DOE facilities, elemental phosphorous plants, non-DOE federal facilities other than NRC licensees (such as Naval, Department of Defense, and other research and industrial facilities), phosphogypsum stacks, underground uranium mines and uranium mill tailings piles. Owners and operators of each facility must monitor and track emissions and calculate the highest effective dose equivalent. It is assumed that all facilities will perform emission testing so that EPA can ensure that the regulated facilities are in compliance with the standard, can identify violators, and prescribe corrective action to bring the facilities back into compliance. The DOE facilities and non-DOE federal facilities other than NRC licensees will be required to adopt the updated ANSI standard for sampling methods for any newly constructed or modified source requiring continuous sampling. Existing stacks not undergoing modification will not be required to upgrade to the new sampling standards; but will require more rigorous inspections to ensure that all sampling systems; both new and existing will function as intended. Activities consist of reading and understanding the regulatory provisions and compliance procedures, preparing a test plan, performing testing, performing data analysis, preparing a report, and storing and maintaining data.

Respondent	Number of Facilities
Department of Energy	40
Elemental Phosphorous	2
Non-DOE not licensed by NRC	20
Phosphogypsum Stacks	35
Underground Uranium Mines	7
Uranium Mill Tailings Piles (Subparts T and W)	13
Total	122

It is estimated that 122 facilities would be required to report emissions and/or effective dose equivalent annually and retain supporting records for five years. The total record keeping and reporting burden hours is 288 hours times 122 respondents = 35,136 hours. The estimated annualized capital/start up costs are: $45,000 and the annual operation and maintenance costs are $1,581,120.

Burden means the total time, effort, or financial resources expended by persons to generate, maintain, retain, or disclose or provide information to or for a Federal agency. This includes the time needed to review instructions; develop, acquire, install, and utilize technology and systems for the purposes of collecting, validating, and verifying information, processing and maintaining information, and disclosing and providing information.

Dated: March 5, 2002.

Bonnie Gitlin,

Acting Director, Radiation Protection Division, Office of Radiation and Indoor Air.

[FR Doc. 02–5745 Filed 3–8–02; 8:45 am]

BILLING CODE 6560–50–P

ENVIRONMENTAL PROTECTION AGENCY

[FRL–7155–5]

Agency Information Collection Activities; OMB Responses

AGENCY: Environmental Protection Agency (EPA).

ACTION: Notices.

SUMMARY: This document announces the Office of Management and Budget's (OMB) responses to Agency clearance request, in compliance with the Paperwork Reduction Act (44 U.S.C. 3501 *et seq.*). An agency may not conduct or sponsor, and a person is not required to respond to, a collection of information unless it displays a currently valid OMB control number. The OMB control numbers for EPA's regulations are listed in 40 CFR part 9 and 48 CFR chapter 15.

FOR FURTHER INFORMATION CONTACT: Susan Auby at 260–4901, or email at *Auby.susan@epa.gov.* and please refer to the appropriate EPA Information Collection Request (ICR) Number.

SUPPLEMENTARY INFORMATION:

OMB Responses to Agency Clearance Requests

OMB Approvals

EPA ICR No. 1860.02; Assessment of Compliance Assistance Projects; was approved 02/13/2002; OMB No. 2020–0015; expires 02/28/2005.

EPA ICR No. 0559.07; Application for Reference and Equivalent Method Determination; was approved 02/15/2002; OMB No. 2080–0005; expires 02/28/2005.

EPA No. 1591.14; Regulation of Fuels and Fuel Additives: Reformulated Gasoline Terminal Receipt Date; was approved 02/22/2002; OMB No. 2060–0277; expires 04/30/2004.

EPA No. 2015.01, Certification in Lieu of Chloroform Minimum Monitoring Requiring for Direct and Indirect Discharging Mills in the Bleached Papergrade Kraft and Soda Subcategory of the Public, Paper; was approved 02/15/2002; OMB No. 2020–0242; expires 02/28/2005.

EPA No. 1878.01; Minimum Monitoring Requirements for Direct and Indirect Discharging Mills in the Bleached Papergrade Kraft and Soda Subcategory and the Papergrade Sulfite Subcategory of the Pulp, Paper, was approved 02/25/2002; OMB No. 2020–0243; expires 02/28/2005.

Short Term Extensions

EPA ICR No. 0783.40; Motor Vehicle Emission Standards and Emission Credits Provisions; in 40 CFR parts 86 and 600; OMB No. 2060–0104; on 02/13/2002 OMB extended the expiration date through 03/31/2002.

Comment Filed

EPA ICR No. 1648.03, Control Technology Determination for Equivalent Emission Limitations by Permit; OMB No. 2060–0266; on 02/11/2002 OMB filed comment.

Dated: February 28, 2002.

Oscar Morales,

Director, Collection Strategies Division.

[FR Doc. 02–5741 Filed 3–8–02; 8:45 am]

BILLING CODE 6560–50–M

ENVIRONMENTAL PROTECTION AGENCY

[FRL–7155–6]

Agency Information Collection Activities; OMB Responses

AGENCY: Environmental Protection Agency (EPA).

ACTION: Notices.

SUMMARY: This document announces the Office of Management and Budget's (OMB) responses to Agency clearance requests, in compliance with the Paperwork Reduction Act (44 U.S.C. 3501 *et seq.*). An agency may not conduct or sponsor, and a person is not required to respond to, a collection of information unless it displays a currently valid OMB control number. The OMB control numbers for EPA's regulations are listed in 40 CFR part 9 and 48 CFR chapter 15.

FOR FURTHER INFORMATION CONTACT: Susan Auby at 260–4901, or e-mail at *Auby.susan@epa.gov,* and please refer to the appropriate EPA Information Collection Request (ICR) Number.

SUPPLEMENTARY INFORMATION:

OMB Responses to Agency Clearance Requests

OMB Approvals

EPA ICR No. 1947.02; National Emission Standards for Hazardous Air Pollutants: Solvent Extraction for Vegetable Oil Production; in 40 CFR part 63, subpart GGGG; was approved 01/03/2002; OMB No. 2060–0471; expires 01/31/2005.

EPA ICR No. 0107.07; Source Compliance and State Action Reporting; in 40 CFR part 51, subpart Q; was approved 01/04/2002; OMB No. 2060–0096; expires 01/31/2005.

EPA ICR No. 1626–07; National Recycling and Emissions Reduction Program; in 40 CFR part 82, subpart F; was approved 07/20/2000, OMB No. 2060–0256; expires 07/31/2003.

EPA ICR No. 1284.06; Standards of Performance for New Stationary Sources, Polymeric Coating of Supporting Substrates Facilities, 40 CFR part 60, subpart VVV; was approved 01/04/2002; OMB No. 2060–0181; expires 01/31/2005.

EPA ICR No. 0370.18; Underground Injection Control Program; in 40 CFR parts 144 through 148; was approved 01/09/2002; OMB No. 2040–0042; expires 01/31/2005.

EPA ICR No. 2058.01; Anthrax Decontamination Vendor Letter: Request for Test and supporting information to determine efficacy; was approved 01/15/2002; OMB No. 2050–0183; expires 06/30/2002.

EPA ICR No. 1741.03; Correction of Misreported Chemical Substances on the Toxic Substances Control Act (TSCA) Chemical Substances Inventory; in 40 CFR part 710; was approved 01/25/2002; OMB No. 2070–0145; expires 01/31/2005.

Comments Filed

EPA ICR No. 2029.01; National Emission Standards for Hazardous Air Pollutants: Asphalt Processing and Asphalt Roofing Manufacturing; in 40 CFR part 63, subpart LLLLL; on 01/03/2002 OMB filed comment.

Dated: February 28, 2002.

Oscar Morales,

Director, Collection Strategies Division.

[FR Doc. 02–5744 Filed 3–8–02; 8:45 am]

BILLING CODE 6560–50–P

ENVIRONMENTAL PROTECTION AGENCY

[FRL–7152–8]

Public Water System Supervision Program Revision for the State of Arkansas

AGENCY: Environmental Protection Agency (EPA).

ACTION: Notice of tentative approval.

SUMMARY: Notice is hereby given that the State of Arkansas is revising its approved Public Water System Supervision Program. Arkansas has adopted an Interim Enhanced Surface Water Treatment Rule to improve control of microbial pathogens in drinking water, including specifically the protozoan Cryptosporidium, and a Stage 1 Disinfectant/Disinfection Byproducts Rule, setting new requirements to limit the formation of chemical disinfectant byproducts in drinking water. EPA has determined

that these revisions are no less stringent than the corresponding federal regulations. Therefore, EPA intends to approve these program revisions.

All interested parties may request a public hearing. A request for a public hearing must be submitted by April 10, 2002, to the Regional Administrator at the EPA Region 6 address shown below. Frivolous or insubstantial requests for a hearing may be denied by the Regional Administrator. However, if a substantial request for a public hearing is made by April 10, 2002, a public hearing will be held. If no timely and appropriate request for a hearing is received and the Regional Administrator does not elect to hold a hearing on his own motion, this determination shall become final and effective on April 10, 2002. Any request for a public hearing shall include the following information: The name, address, and telephone number of the individual, organization, or other entity requesting a hearing; a brief statement of the requesting person's interest in the Regional Administrator's determination and a brief statement of the information that the requesting person intends to submit at such hearing; and the signature of the individual making the request, or, if the request is made on behalf of an organization or other entity, the signature of a responsible official of the organization or other entity.

ADDRESSES: All documents relating to this determination are available for inspection between the hours of 8 a.m. and 4:30 p.m., Monday through Friday, at the following offices: Arkansas Department of Health, Division of Engineering—Slot #37, 4815 West Markham, Little Rock, Arkansas 72205 and United States Environmental Protection Agency, Region 6, Drinking Water Section (6WQ–SD), 1445 Ross Avenue, Suite 1200, Dallas, Texas 75202.

FOR FURTHER INFORMATION CONTACT: José G. Rodriguez, EPA Region 6, Drinking Water Section at the Dallas address given above or at telephone (214) 665–8087.

Authority: (Section 1413 of the Safe Drinking Water Act, as amended (1996), and 40 CFR part 142 of the National Primary Drinking Water Regulations).

Dated: February 22, 2002.

Lawrence Starfield,

Acting Regional Administrator, Region 6.

[FR Doc. 02–5182 Filed 3–8–02; 8:45 am]

BILLING CODE 6560–50–P

FEDERAL COMMUNICATIONS COMMISSION

Public Information Collections Approved by Office of Management and Budget

March 4, 2002.

The Federal Communications Commission (FCC) has received Office of Management and Budget (OMB) approval for the following public information collections pursuant to the Paperwork Reduction Act of 1995, Pub. L. 104–13. An agency may not conduct or sponsor and a person is not required to respond to a collection of information unless it displays a currently valid control number. For further information contact Shoko B. Hair, Federal Communications Commission, (202) 418–1379.

Federal Communications Commission

OMB Control No.: 3060–0463.

Expiration Date: 07/31/2002.

Title: Telecommunications Services for Individuals with Hearing and Speech Disabilities and the Americans with Disabilities Act of 1990, 47 CFR part 64 (Sections 64.601–64.605).

Form No.: N/A.

Respondents: Business or other for-profit.

Estimated Annual Burden: 5052 respondents; 5.31 hour per response (avg.); 26,831 total annual burden hours (for all collections under this control number).

Estimated Annual Reporting and Recordkeeping Cost Burden: $0.

Frequency of Response: On occasion; Every five years; Recordkeeping; Third Party Disclosure.

Description: In the *Memorandum Opinion and Order and Further Notice of Proposed Rulemaking* issued in CC Docket No. 98–67, released December 21, 2001 (MO&O), the Commission adopts three of the four recommendations for traditional TRS: (1) The Commission directs the TRS administrator to use the average per minute costing methodology to develop the interstate cost recovery mechanism for traditional TRS; (2) the Commission also directs the TRS administrator to review the TRS Center Data Request, and report to the Chief of the Common Carrier Bureau, on an ongoing basis, any changes necessary to ensure that TRS providers are compensated for additional costs imposed by the *Improved TRS Order;* and (3) the Commission directs that the same minutes of use allocation methodology in place for toll-free call minutes should be used for 900 call minutes. In the *MO&O,* the Commission also adopts the four recommendations for STS cost recovery: (1) The Commission directs the TRS administrator to use the same average per minute costing methodology cost recovery mechanism for traditional TRS for STS; (2) the Commission adopts a separate per-minute national average compensation formula for STS and directs the TRS administrator to develop annually a national average STS reimbursement rate for compensating STS providers; (3) because STS service is of a more recent origin, the Commission adopts the Advisory Council and the Fund Administrator's recommendation that the TRS Center Data Request be expanded to capture separately STS costs and minutes; and (4) as with traditional TRS, each provider of STS services will be compensated at the national average rate for every completed conversation minute. In the *MO&O,* the Commission also states that due to the unique characteristics of VRS, a separate reimbursement rate for VRS should be calculated. The Commission also agrees with the Advisory Council and the Fund Administrator's recommendation that the TRS Center Data Request should be expanded to include specific sections to capture separately VRS costs and minutes for this service. Thus, the Commission requires NECA to expand the TRS Data Request to include data that are specific to VRS. By promoting the efficient and effective means of cost recovery for TRS services, these collection requirements should help to advance a procompetitive, deregulatory national policy framework for telecommunications services, a key goal of the Telecommunications Act of 1996. Other information collections unaffected by the MO&O remain in place as currently approved by OMB.

Obligation to respond: Mandatory.

OMB Control No.: 3060–0519.

Expiration Date: 02/28/2005.

Title: Rules and Regulations Implementing the Telephone Consumer Protection Act of 1991 (CC Docket No. 92–06).

Form No.: N/A.

Respondents: Business or other for-profit.

Estimated Annual Burden: 30,000 respondents; 31.2 hours per response (avg.); 936,000 total annual burden hours.

Estimated Annual Reporting and Recordkeeping Cost Burden: $0.

Frequency of Response: On occasion; Recordkeeping..

Description: In CC Docket No. 92–60, the Commission implemented rules pursuant to the requirements of the Telephone Consumer Protection Act of 1991, Public Law 102–243, December

20, 1991 (TCPA) which added Section 227 to the Communications Act of 1934, as amended, to restrict the use of automatic telephone dialing systems, artificial or prerecorded messages, facsimile machines or other devices to send unsolicited advertisements. The rules require that telephone solicitors maintain and use company-specific lists of residential subscribers who request not to receive further telephone calls (company-specific do-not-call lists), thereby affording consumers the choice of which solicitors if any, they will hear from by telephone. Telephone solicitors also are required to have a written policy for maintaining do-not-call lists, and are responsible for informing and training their personnel the existence and use of such lists. See 47 CFR Section 64.1200(e)(i). The rules require that those making telephone solicitations identify themselves to called parties, and that basic identifying information also be included in telephone facsimile transmissions. See 47 CFR Sections 64.1200(e)(iv) and 68.318(c)(3). The Commission believes that these rules are the best means of preventing unwanted telephone solicitations. *Obligation to respond:* Mandatory.

OMB Control No.: 3060–0653.

Expiration Date: 02/28/2005.

Title: Sections 64.703(b) and (c)—Consumer Information—Posting by Aggregators.

Form No.: N/A. .

Respondents: Business or other for-profit.

Estimated Annual Burden: 56,200 respondents; 3.67 hour per response (avg.); 206,566 total annual burden hours.

Estimated Annual Reporting and Recordkeeping Cost Burden: $0.

Frequency of Response: On occasion; Third Party Disclosure.

Description: Section 226(c)(1)(A) of the Communications Act and Section 64.703(b) of the Commission's rules require that each aggregator post on or near the telephone instrument in plain view of consumers: (1) The name, address, and toll-free telephone number of the provider of operator services; (2) written disclosure that the rates for all operator-assisted calls are available on request, and that consumers have a right to obtain access to the interstate common carrier of their choice and may contact their preferred interstate common carriers for information on accessing that carrier's service using that telephone; and (3) the name and address of the Consumer Information Bureau of the Commission, to which the consumer may direct complaints regarding operator services. This requirement was a response to a widespread failure of aggregators to disclose information necessary for informed consumer choice in the marketplace. See 47 CFR Section 64.703(b). In the Second Order on Reconsideration in CC Docket No. 92–77, the Commission amended section 64.703(b)(4) to require that the new bureau's (Consumer Information Bureau) name and address be posted on payphones in future postings. The Consumer Information Bureau, is now the appropriate recipient of consumer complaints about OSPs. Section 64.703(c) establishes a 30-day outer limit for aggregators to update the posted information. An aggregator may meet the 30-day outer limit rule, where its maintenance technicians would not otherwise visit the particular payphone location within 30 days, by having its coin collection or other agent affix a temporary sticker to the payphone. Such temporary sticker must be replaced with permanent signage during the next regularly scheduled maintenance visit. Section 64.703(c) is intended to provide updated OSP information to consumers and enable consumers to make informed choices when placing operator service calls. See 47 CFR Section 64.703(c). Aggregators will disclose the required information to consumers via printed notice that is posted on or near each of the aggregator's phones. Pursuant to Section 64.703(c), this information must be updated within 30 days in changes of OSPs. Consumers will use this information to determine whether they wish to use the services of the identified OSP. *Obligation to respond:* Mandatory.

OMB Control No.: 3060–0823.

Expiration Date: 2/28/2005.

Title: Pay Telephone Reclassification Memorandum Opinion and Order, CC Docket No. 96–128.

Form No.: N/A.

Respondents: Business or other for-profit.

Estimated Annual Burden: 400 respondents; 111.75 hour per response (avg.); 44,700 total annual burden hours.

Estimated Annual Reporting and Recordkeeping Cost Burden: $480,000.

Frequency of Response: On occasion; Recordkeeping; Third Party Disclosure.

Description: In the Payphone Orders, the Commission adopted rules and policies governing the payphone industry to implement section 276 of the Telecommunications Act of 1996. Those rules and policies in part establish a plan to ensure fair compensation for ''each and every completed intrastate and interstate call using [a] payphone.'' Specifically, the Commission established a plan to ensure that payphone service providers (PSPs) were compensated for certain noncoin calls originated from their payphones. In a Memorandum Opinion and Order issued in CC Docket No. 96–128 (Order), the Commission clarified requirements established in the Payphone Orders for the provision of payphone-specific coding digits. The following collections of information implement section 276 of the Act. The collection requirements are as follows:

a. *LEC Tariff to provide FLEX ANI to IXCs:* Local exchange carriers (LECs) must implement FLEX ANI to comply with the requirements set forth in the Payphone Orders. LECs must provide to IXCs through their interstate tariffs, FLEX ANI service so that IXCs can identify which calls come from a payphone. LECs (and PSPs) must provide FLEX ANI to IXCs without charge for the limited purpose of per-call compensation, and accordingly, LECs providing FLEX ANI must revise their interstate tariffs to reflect FLEX ANI as a nonchargeable option to IXCs no later than March 30, 1998, to be effective no later than April 15, 1998, in those areas that it is available. (No. of respondents: 400; hours per response: 35 hours; total annual burden: 14,000 hours.)

b. *LEC Tariff to recover costs:* LECs must file a tariff to establish a rate element in their interstate tariffs to recover their costs from PSPs for providing payphone-specific coding digits to IXCs. This tariff must reflect the costs of implementing FLEX ANI to provide payphone-specific coding digits for payphone compensation, and provide for recovery of such costs over a reasonable time period through a monthly recurring flat-rate charge. LECs must provide cost support information for the rate elements they propose. The Bureau will review these LEC rate element tariff filings, the reasonableness of the costs, and the recovery period. LECs will recover their costs over an amortization period of no more than ten years. The rate element charges will discontinue when the LEC has recovered its cost. (No. of respondents: 400; hours per response: 35 hours; total annual burden 14,000 hours.)

c. *LECs must provide IXCs information on payphones that provide payphone-specific coding digits for smart and dumb payphones:* LECs must provide IXCs information on the number and location of smart and dumb payphones providing payphone-specific coding digits, as well as the number of those that are not. (No. of respondents: 400; hours per response: 24 hours; total annual burden: 9600 hours.)

d. *LECs must provide IXCs and PSPs information on where FLEX ANI is*

available now and when it is to be scheduled in the future: Within 30 days of the release of the MO&O, LECs should be prepared to provide IXCs, upon request, information regarding their plans to implement FLEX ANI by end office. LECs must provide IXCs and PSPs information on payphones that provide payphone-specific coding digits on end offices where FLEX ANI is available, and where it is not, on a monthly basis. Pursuant to the waivers in this order, LECs must also inform IXCs and PSPs proposed dates for its availability. (No. of respondents: 400; hours per response: 16 hours; total annual burden: 6400 hours.)

e. *For a waiver granted to small or midsize LECs, a cost analysis must be provided, upon request:* In the MO&O, the Bureau grants a waiver to midsize and small LECs that will be unable to recover the costs of implementing FLEX ANI in a reasonable time period. LECs must make this evaluation within 30 days of the release of the MO&O. The LEC must then notify IXCs that they will not be implementing FLEX ANI pursuant to this waiver, and provide the number of dumb payphones providing the ''27'' coding digit and the number of smart phones for which payphone-specific coding digits are unavailable. A LEC delaying the implementation of FLEX ANI pursuant to this waiver provision must be prepared to provide its analysis, if requested by the Commission. (No. of respondents: 20; hours per response: 35 hours; total annual burden: 700 hours.) The information disclosure rules and policies governing the payphone industry to implement section 276 of the Act will ensure the payment of per-call compensation by implementing a method for LECs to provide information to IXCs to identify calls, for each and every call made from a payphone. Obligation to respond: Required to obtain or retain benefits.

Public reporting burden for the collections of information are as noted above. Send comments regarding the burden estimates or any other aspect of the collections of information, including suggestions for reducing the burden to Performance Evaluation and Records Management, Washington, DC 20554.

Federal Communications Commission.

William Caton,

Acting Secretary.

[FR Doc. 02–5677 Filed 3–8–02; 8:45 am]

BILLING CODE 6712–01–P

FEDERAL COMMUNICATIONS COMMISSION

Notice of Public Information Collection(s) being Submitted to OMB for Review and Approval

March 4, 2002.

SUMMARY: The Federal Communications Commissions, as part of its continuing effort to reduce paperwork burden invites the general public and other Federal agencies to take this opportunity to comment on the following information collection, as required by the Paperwork Reduction Act of 1995, Public Law 104–13. An agency may not conduct or sponsor a collection of information unless it displays a currently valid control number. No person shall be subject to any penalty for failing to comply with a collection of information subject to the Paperwork Reduction Act (PRA) that does not display a valid control number. Comments are requested concerning (a) whether the proposed collection of information is necessary for the proper performance of the functions of the Commission, including whether the information shall have practical utility; (b) the accuracy of the Commission's burden estimate; (c) ways to enhance the quality, utility, and clarity of the information collected; and (d) ways to minimize the burden of the collection of information on the respondents, including the use of automated collection techniques or other forms of information technology.

DATES: Written comments should be submitted on or before April 10, 2002. If you anticipate that you will be submitting comments, but find it difficult to do so within the period of time allowed by this notice, you should advise the contact listed below as soon as possible.

ADDRESSES: Direct all comments to Les Smith, Federal Communications Commission, Room 1–A804, 445 12th Street, SW., Washington, DC 20554 or via the Internet to *lesmith@fcc.gov*.

FOR FURTHER INFORMATION CONTACT: For additional information or copies of the information collections contact Les Smith at (202) 418–0217 or via the Internet at *lesmith@fcc.gov*.

SUPPLEMENTARY INFORMATION:

OMB Control Number: 3060–0065.

Title: Application for New or Modified Radio Station Authorization Under Part 5 of FCC Rules, Experimental Radio Service (Other than Broadband).

Form Number: FCC 442.

Type of Review: Extension of a currently approved collection.

Respondents: Business or other for-profit entities; Not-for-profit institutions; and State, local, or tribal governments.

Number of Respondents: 700.

Estimated Time Per Response: 4 hrs.

Frequency of Response: Recordkeeping; On occasion reporting requirement.

Total Annual Burden: 2,800 hrs.

Total Annual Costs: None.

Needs and Uses: Applicants must file FCC Form 442 under 47 CFR Sections 5.55(a), (b), and (c) of FCC Rules to obtain a license to operate a new or modified experimental radio station. The Commission uses the data obtained from Form 442 to if the applicant is eligible for an experimental license; the purpose of the experiment; compliance with the requirements of 5 CFR part 5 of FCC Rules; and if the proposed operation will cause interference to existing operations.

OMB Control Number: 3060–0149.

Title: Application and Supplemental Information Requirements—Part 63, Section 214, Sections 63.01–63.601.

Form Number: N/A.

Type of Review: Revision of a currently approved collection.

Respondents: Business or other for-profit entities.

Number of Respondents: 255.

Estimated Time Per Response: 10 hrs. (avg.).

Frequency of Response: Recordkeeping; On occasion reporting requirements; Third party disclosure.

Total Annual Burden: 2,550 hrs.

Total Annual Costs: None.

Needs and Uses: Section 214 of the Communications Act of 1934, as amended, requires that the FCC review the establishment, lease, operations, and extension of channels of communications by interstate common carriers. 47 CFR part 63 implements section 214. part 63 also implements provisions of the Cable Communications Policy Act of 1984 pertaining to video programming by telephone common carriers. The Commission uses the information it receives in applications from dominant carriers to determine if the facilities are needed. The information received from non-dominant carriers is used to monitor the growth of the networks and the availability of common carrier services.

OMB Control Number: 3060–0484.

Title: Amendment of part 63 of the Commission's Rules to Provide for Notification of Common Carriers of Service Disruptions, section 63.100.

Form Number: N/A.

Type of Review: Extension of a currently approved collection.

Respondents: Businesses or other for-profit entities.

Number of Respondents: 52.

Estimated Time Per Response: 5 hrs.

Frequency of Response: On occasion reporting requirements.

Total Annual Burden: 1,040 hrs.

Total Annual Costs: None.

Needs and Uses: 47 CFR 63.100 of the FCC Rules requires local exchange or interexchange common carriers that operate transmission or switching facilities and provide access service or interstate or international communications services that experience outages on any facilities that they own or operate to notify the FCC if the service outage continues for 30 or more minutes. Carriers must file an initial and final service outage report. The FCC uses these reports to monitor developments affecting telecommunications reliability; to serve as a source of public information; to encourage and, where appropriate, to assist in dissemination of information to those affected; and to take immediate steps, as needed, and after analyzing the information, to determine what, if any, additional action is required.

OMB Control Number: 3060–0856

Title: Universal Service—Schools and Libraries Universal Service Program Reimbursement Forms.

Form Number: FCC 472, 473, and 474.

Type of Review: Extension of a currently approved collection.

Respondents: Businesses or other for-profit entities; and Not-for-profit institutions.

Number of Respondents: 61,800.

Estimated Time Per Response: 1.0 to 1.5 hrs.

Frequency of Response: On occasion reporting requirements; Third party disclosure.

Total Annual Burden: 88,050 hrs.

Total Annual Costs: None.

Needs and Uses: The Telecommunications Act of 1996 contemplates that discounts on eligible services shall be provided to schools and libraries, and that service providers shall seek reimbursement for the amount of the discounts. Service providers/vendors that participate in the universal service support are assigned a service provider identification number (SPIN). The fund administrator uses FCC Form 472, Billed Entity Applicant Reimbursement Form, to pay universal service support to service providers who give discounted services to eligible schools, libraries, and consortia of those entities. Service provider/vendors use FCC Form 473, Service Provider Annual Certification Form, to confirm that they are in compliance with the FCC's rules governing the schools and libraries universal service support mechanism. In addition, service providers/vendors use FCC Form 474, Service Provider Invoice Form, to seek reimbursement for the cost of discounts that they give to eligible entities for eligible services.

OMB Control Number: 3060–0995.

Title: Amendment of Part 1 of the Commission's Rules—Competitive Bidding Procedures, 47 CFR Section 1.2105(c)(1) of the Commission's Rules (Anti-Collusion).

Form Number: N/A.

Type of Review: Extension of a currently approved collection.

Respondents: Business or other for-profit entities; Individuals or households; Not-for-profit institutions; and State, local, or tribal governments.

Number of Respondents: 10.

Estimated Time Per Response: 5 hours.

Frequency of Response: On occasion reporting requirements.

Total Annual Burden: 50 hours.

Total Annual Costs: None.

Needs and Uses: The information requirement will enable the FCC to ensure that no bidder gains an unfair advantage over other bidders in its spectrum auctions, and thus enhance the competitiveness and fairness of its auctions. The Commission will review the information collected will review and, if warranted, refer it to the Commission's Enforcement Bureau for possible investigation and administrative action. The Commission may also refer allegations of anticompetitive auction conduct to the Department of Justice for investigation.

Federal Communication Commission.

William F. Caton,

Acting Secretary.

[FR Doc. 02–5784 Filed 3–8–02; 8:45 am]

BILLING CODE 6712–01–P

FEDERAL COMMUNICATIONS COMMISSION

[CC Docket No. 02–39; FCC 02–57]

Review of the Equal Access and Nondiscrimination Obligations Applicable to Local Exchange Carriers

AGENCY: Federal Communications Commission

ACTION: Notice.

SUMMARY: This document initiates an inquiry to examine the continued importance of the equal access and nondiscrimination obligations of section 251(g) of the Communications Act of 1934, as amended (the Act). This document also seeks to develop a baseline record regarding the current state of equal access and nondiscrimination requirements. As such, it seeks comment on the existing equal access and nondiscrimination obligations of Bell Operating Companies (BOCs), both with and without section 271 authority. The Commission also seeks comment on the equal access and nondiscrimination obligations of incumbent independent local exchange carriers (LECs) and competitive LECs. Then, the Commission asks commenters what the equal access and nondiscrimination requirements of all these carriers should be, considering the many legal and marketplace changes that have transpired since the earlier requirements were adopted.

DATES: Comments are due May 10, 2002, and reply comments are due June 10, 2002.

FOR FURTHER INFORMATION CONTACT: Julie Veach, Attorney-Advisor, Policy and Program Planning Division, Common Carrier Bureau, at (202) 418–1558, or via the Internet at *jveach@fcc.gov.*

SUPPLEMENTARY INFORMATION: This is a summary of the Commission's Notice of Inquiry (NOI) in CC Docket No. 02–39, FCC 02–57, adopted February 19, 2002, and released February 28, 2002. The complete text of this NOI is available for inspection and copying during normal business hours in the FCC Reference Information Center, Portals II, 445 12th Street, SW., Room CY–A257, Washington, DC, 20554. This document may also be purchased from the Commission's duplicating contractor, Qualex International, Portals II, 445 12th Street, SW., Room CY–B402, Washington, DC 20554, telephone 202–863–2893, facsimile 202–863–2898, or via e-mail *qualexint@aol.com.* It is also available on the Commission's Web site at *http://www.fcc.gov.*

Synopsis of the Notice of Inquiry (NOI)

1. The Commission's goals in conducting this inquiry are: (1) To facilitate an environment that will be conducive to competition, deregulation and innovation; (2) to establish a modern equal access and nondiscrimination regulatory regime that will benefit consumers; (3) to balance regulatory costs against these benefits, and (4) to harmonize the requirements of similarly-situated carriers as much as possible.

2. *Background.* By adopting the Telecommunications Act of 1996 (1996 Act), Congress sought to lay the foundation for pro-competitive, deregulatory telecommunications policies that facilitate investment in and deployment of advanced services to all

Americans. Mindful that competition would not develop in all markets immediately, Congress left in place certain safeguards, such as section 251(g). That statutory provision preserves the equal access and nondiscrimination requirements that were established for LECs ''under any court order, consent decree, or regulation, order, or policy of the Commission'' prior to passage of the 1996 Act. Notably, section 251(g) imports the obligations of the Modification of Final Judgment (MFJ), the consent decree that settled the Department of Justice's antitrust suit against AT&T and required divestiture of the BOCs, as well as Commission equal access requirements. Section 251(g) grants the Commission authority to prescribe regulations superseding pre-existing equal access and nondiscrimination obligations.

3. First, the Commission seeks comment on how it should go about changing or eliminating any existing equal access and nondiscrimination requirements, should it decide to do so. Specifically, section 251(g) states that all pre-1996 Act requirements continue to apply ''until such restrictions and obligations are explicitly superseded by regulations prescribed by the Commission.'' Congress expected that ''[w]hen the Commission promulgates its new regulations, * * * the Commission will explicitly identify those parts of the interim restrictions and obligations that it is superseding so that there is no confusion as to what restrictions and obligations remain in effect.'' The Commission asks whether it should adopt new rules to replace the existing section 251(g) requirements, or is it enough for the Commission to state in an order that such requirements are no longer necessary in the wake of the 1996 Act? Alternatively, it asks whether the Commission should forbear from such requirements to the extent they meet the standards of 47 U.S.C. 160?

4. *Changing Market Conditions.* The Commission seeks comment on what equal access and nondiscrimination requirements were carried through from the MFJ, to which carriers these requirements apply, and the extent to which these requirements are relevant today. The Commission further seeks comment on whether the goals underlying section 251(g) can be achieved through any other means, including reliance on other provisions of section 251 and the requirements that the Commission has imposed pursuant to those provisions. It further asks how sections 201 and 202, and the Commission's orders interpreting those sections, affect the need for separate equal access and nondiscrimination requirements in light of current marketplace conditions, including the state of competition in the local market and BOC entry into the long distance market.

5. *Bell Operating Companies.* The Commission seeks comment on the existing equal access and nondiscrimination requirements of BOCs, which include the line of cases stemming from the MFJ. It also seeks comment on what the BOCs' equal access and nondiscrimination obligation should be, whether changes in equal access and nondiscrimination requirements are now needed for BOCs and what changes are appropriate. Should BOCs be required to provide information regarding all available interexchange carriers? What kind of marketing arrangements between BOCs and other carriers are permissible? What is the relationship between sections 251(g) and 272?

6. *Incumbent Independent Local Exchange Carriers.* Section 251(g) also imports equal access and nondiscrimination requirements that existed for incumbent independent LECs prior to the 1996 Act. The Commission seeks comment on what, if any, ''order, consent decree, or regulation, order, or policy of the Commission'' applies to incumbent independent LECs. It also asks what the regulatory costs to these carriers are under the current equal access and nondiscrimination requirements and whether those requirements should continue to apply to incumbent independent LECs in view of the new competitive paradigm contemplated by the 1996 Act. The Commission also asks for comment on the extent to which it can harmonize the obligations of incumbent independent LECs that provide interLATA services through a separate affiliate with the obligations of other LECs that provide interLATA services through a separate affiliate, and the extent to which it can harmonize the obligations of incumbent independent LECs that provide interLATA services on an integrated basis with the obligations of other LECs that provide interLATA services on an integrated basis.

7. *Competitive Local Exchange Carriers.* The Commission also seeks comment on the existing equal access and nondiscrimination obligations that apply to competitive LECs. What Commission orders or other law impose equal access and nondiscrimination requirements on non-incumbent LECs today, and what are the regulatory costs to these carriers of those requirements? What, if any, should the equal access and nondiscrimination obligations of competitive LECs be? Can the Commission harmonize the obligations of competitive LECs with the obligations of other LECs that provide interLATA services on an integrated basis?

Federal Communications Commission.

William F. Caton,

Acting Secretary.

[FR Doc. 02–5673 Filed 3–8–02; 8:45 am]

BILLING CODE 6712–01–P

FEDERAL COMMUNICATIONS COMMISSION

Technological Advisory Council Meeting Postponed

AGENCY: Federal Communications Commission.

ACTION: Notice of cancellation of public meeting.

SUMMARY: In accordance with the Federal Advisory Committee Act, 5 U.S.C. App. 2, Public Law 92–463, as amended, this notice advises interested persons that the meeting of the Technological Advisory Council scheduled for March 20, 2002 has been cancelled and will be rescheduled at a later date.

FOR FURTHER INFORMATION CONTACT: Jeffery Goldthorp, *jgoldtho@fcc.gov,* or 202–418–1096.

Federal Communications Commission.

William F. Caton,

Acting Secretary.

[FR Doc. 02–5674 Filed 3–8–02; 8:45 am]

BILLING CODE 6712–01–P

FEDERAL COMMUNICATIONS COMMISSION

[Report No. 2534]

Petition for Clarification and Waiver of Action in Rulemaking Proceeding

March 4, 2002.

Petition for Clarification and Waiver has been filed in the Commission's rulemaking proceeding listed in this Public Notice and published pursuant to 47 CFR 1.429(e). The full text of this document is available for viewing and copying in Room CY–A257, 445 12th Street, SW., Washington, DC or may be purchased from the Commission's copy contractor, Qualex International (202) 863–2893. Oppositions to this petition must be filed by March 26, 2002. See section 1.4(b)(1) of the Commission's rules (47 CFR 1.4(b)(1)). Replies to an opposition must be filed within 10 days after the time for filing oppositions has expired.

Subject: Billed Party Preference for O + Interlata Calls (CC Docket No. 92–77).

Number of Petitions Filed: 1.

William F. Caton,

Acting Secretary.

[FR Doc. 02–5678 Filed 3–8–02; 8:45 am]

BILLING CODE 6212–01–M

FEDERAL COMMUNICATIONS COMMISSION

[Report No. 2535]

Petition for Reconsideration of Action in Rulemaking Proceeding

March 5, 2002.

Petition for Reconsideration has been filed in the Commission's rulemaking proceeding listed in this Public Notice and published pursuant to 47 CFR 1.429(e). The full text on this document is available for viewing and copying in Room CY–A257, 445 12th Street, SW., Washington, DC or may be purchased from the Commission's copy contractor, Qualex International (202) 863–2893. Oppositions to this petition must be filed by March 26, 2002. See section 1.4(b)(1) of the Commission's rules (47 CFR 1.4(b)(1)). Replies to an opposition must be filed within 10 days after the time for filing oppositions has expired.

Subject: Amendment of part 67 of the Commission's Rules and Establishment of a Joint Board (CC Docket No. 80–286).

Numbers of Petitions Filed: 1.

William F. Caton,

Acting Secretary.

[FR Doc. 02–5679 Filed 3–8–02; 8:45 am]

BILLING CODE 6712–01–M

FEDERAL ELECTION COMMISSION

Sunshine Act Meeting

Date & Time: Thursday, March 14, 2002 at 10 a.m.

Place: 999 E Street, NW., Washington, DC (Ninth Floor).

Status: This meeting will be open to the public.

The following item has been added to the agenda: Topics for Administrative Fines Rulemaking.

PERSON TO CONTACT FOR INFORMATION: Mr. Ron Harris, Press Officer, Telephone: (202) 694–1220.

Mary W. Dove,

Secretary of the Commission.

[FR Doc. 02–5859 Filed 3–7–02; 11:51 am]

BILLING CODE 6715–01–M

FEDERAL RESERVE SYSTEM

Formations of, Acquisitions by, and Mergers of Bank Holding Companies

The companies listed in this notice have applied to the Board for approval, pursuant to the Bank Holding Company Act of 1956 (12 U.S.C. 1841 *et seq.*) (BHC Act), Regulation Y (12 CFR part 225), and all other applicable statutes and regulations to become a bank holding company and/or to acquire the assets or the ownership of, control of, or the power to vote shares of a bank or bank holding company and all of the banks and nonbanking companies owned by the bank holding company, including the companies listed below.

The applications listed below, as well as other related filings required by the Board, are available for immediate inspection at the Federal Reserve Bank indicated. The application also will be available for inspection at the offices of the Board of Governors. Interested persons may express their views in writing on the standards enumerated in the BHC Act (12 U.S.C. 1842(c)). If the proposal also involves the acquisition of a nonbanking company, the review also includes whether the acquisition of the nonbanking company complies with the standards in section 4 of the BHC Act (12 U.S.C. 1843). Unless otherwise noted, nonbanking activities will be conducted throughout the United States. Additional information on all bank holding companies may be obtained from the National Information Center website at www.ffiec.gov/nic/.

Unless otherwise noted, comments regarding each of these applications must be received at the Reserve Bank indicated or the offices of the Board of Governors not later than April 5, 2002.

A. Federal Reserve Bank of Cleveland (Stephen J. Ong, Vice President) 1455 East Sixth Street, Cleveland, Ohio 44101–2566:

1. Charter One Financial, Inc., Cleveland, Ohio; to acquire and merge with Charter National Bancorp, Inc., Taylor, Michigan, and thereby acquire Charter Bank, Wyandotte, Michigan.

Board of Governors of the Federal Reserve System, March 6, 2002.

Robert deV. Frierson,

Deputy Secretary of the Board.

[FR Doc. 02–5829 Filed 3–8–02; 8:45 am]

BILLING CODE 6210–01–S

FEDERAL RESERVE SYSTEM

Notice of Proposals to Engage in Permissible Nonbanking Activities or to Acquire Companies that are Engaged in Permissible Nonbanking Activities

The companies listed in this notice have given notice under section 4 of the Bank Holding Company Act (12 U.S.C. 1843) (BHC Act) and Regulation Y (12 CFR Part 225) to engage *de novo*, or to acquire or control voting securities or assets of a company, including the companies listed below, that engages either directly or through a subsidiary or other company, in a nonbanking activity that is listed in § 225.28 of Regulation Y (12 CFR 225.28) or that the Board has determined by Order to be closely related to banking and permissible for bank holding companies. Unless otherwise noted, these activities will be conducted throughout the United States.

Each notice is available for inspection at the Federal Reserve Bank indicated. The notice also will be available for inspection at the offices of the Board of Governors. Interested persons may express their views in writing on the question whether the proposal complies with the standards of section 4 of the BHC Act. Additional information on all bank holding companies may be obtained from the National Information Center website at www.ffiec.gov/nic/.

Unless otherwise noted, comments regarding the applications must be received at the Reserve Bank indicated or the offices of the Board of Governors not later than March 25, 2002.

A. Federal Reserve Bank of New York (Betsy Buttrill White, Senior Vice President) 33 Liberty Street, New York, New York 10045–0001:

1. Barclays Plc and Barclays Bank, both of London, England; to acquire Digital Signature Trust Company, Salt Lake City, Utah, and thereby indirectly engage through Identrus, LLC, New York, New York, in certification authority activities, and other incidental activities relating to the certification authority activities, pursuant to Bayer Hypo- und Verinsbank AG 86 Fed. Res. Bull. 56 (2000).

Board of Governors of the Federal Reserve System, March 5, 2002.

Robert deV. Frierson,

Deputy Secretary of the Board.

[FR Doc.02–5772 Filed 3–8–02; 8:45 am]

BILLING CODE 6210–01–S

DEPARTMENT OF HEALTH AND HUMAN SERVICES

Food and Drug Administration

[Docket No. 02D–0032]

Guidance for Industry; Implementation of Section 755 of the Agriculture, Rural Development, Food and Drug Administration, and Related Agencies Appropriations Act of 2002, Pub. L. No. 107–76, § 755 (2001) Regarding Common or Usual Names for Catfish; Availability; Correction

AGENCY: Food and Drug Administration, HHS.

ACTION: Notice; correction.

SUMMARY: The Food and Drug Administration (FDA) is correcting a notice that appeared in the **Federal Register** of February 6, 2002 (67 FR 5604). The document announced the availability of a document entitled ''Guidance for Industry; Implementation of Section 755 of the Agriculture, Rural Development, Food and Drug Administration, and Related Agencies Appropriations Act of 2002, Pub. L. 107–76, § 755 (2001) Regarding Common or Usual Names for Catfish.'' The document was inadvertently published without the mailing address for the Dockets Management Branch. This document corrects that error.

FOR FURTHER INFORMATION CONTACT: Doris B. Tucker, Office of Policy (HF–27), Food and Drug Administration, 5600 Fishers Lane, Rockville, MD 20857, 301–827–7010.

In FR Doc. 02–2753, appearing on page 5604 in the **Federal Register** of Wednesday, February 6, 2002, the following correction is made:

On page 5604, in the third column, add the following sentence at the end of the **ADDRESSES** section: ''Submit written comments on the document to the Dockets Management Branch (HFA–305), Food and Drug Administration, 5630 Fishers Lane, rm. 1061, Rockville, MD 20852.''

Dated: March 4, 2002.

Margaret M. Dotzel,

Associate Commissioner for Policy.

[FR Doc. 02–5666 Filed 3–8–02; 8:45 am]

BILLING CODE 4160–01–P

DEPARTMENT OF HEALTH AND HUMAN SERVICES

Health Resources and Services Administration

Agency Information Collection Activities; Proposed Collection; Comment Request

In compliance with the requirement for opportunity for public comment on proposed data collection projects (section 3506(c)(2)(A) of Title 44, United States Code, as amended by the Paperwork Reduction Act of 1995, Public Law 104–13), the Health Resources and Services Administration (HRSA) publishes periodic summaries of proposed projects being developed for submission to the Office of Management and Budget under the Paperwork Reduction Act of 1995. To request more information on the proposed project or to obtain a copy of the data collection plans and draft instruments, call the HRSA Reports Clearance Officer on (301) 443–1129.

Comments are invited on: (a) Whether the proposed collection of information is necessary for the proper performance of the functions of the Agency, including whether the information shall have practical utility; (b) the accuracy of the Agency's estimate of the burden of the proposed collection of information; (c) ways to enhance the quality, utility, and clarity of the information to be collected; and (d) ways to minimize the burden of the collection of information on respondents, including the use of automated collection techniques or other forms of information technology.

Proposed Project: Health Education Assistance Loan (HEAL) Program: Lender's Application for Insurance Claim Form and Request for Collection Assistance Form (OMB No. 0915–0036)—Extension

The HEAL program ensures the availability of funds for loans to eligible students who desire to borrow money to pay for their educational costs. The HEAL lenders use the Lenders Application for Insurance Claim to request payment from the Federal Government for federally insured loans lost due to borrowers death, disability, bankruptcy, or default. The Request for Collection Assistance form is used by HEAL lenders to request federal assistance with the collection of delinquent payments from HEAL borrowers.

The burden estimates are as follows:

Form	Number of respondents	Responses per respondent	Total responses	Hours per response (minutes)	Total burden hours
Lender's Application for Insurance Claim	20	75	1,500	30	750
Request for Collection Assistance	20	1,260	25,200	10	4,208
Total Burden	20				4,958

Send comments to Susan G. Queen, Ph.D., HRSA Reports Clearance Officer, Room 11–05, Parklawn Building, 5600 Fishers Lane, Rockville, MD 20857. Written comments should be received within 60 days of this notice.

Dated: March 4, 2002.

Jane M. Harrison,

Director, Division of Policy Review and Coordination.

[FR Doc. 02–5667 Filed 3–8–02; 8:45 am]

BILLING CODE 4165–15–P

DEPARTMENT OF HEALTH AND HUMAN SERVICES

Health Resources and Services Administration

Agency Information Collection Activities: Proposed Collection: Comment Request

In compliance with the requirement for opportunity for public comment on proposed data collection projects (section 3506(c)(2)(A) of title 44, United States Code, as amended by the Paperwork Reduction Act of 1995, Public Law 104–13), the Health Resources and Services Administration (HRSA) publishes periodic summaries of proposed projects being developed for submission to the Office of Management and Budget under the Paperwork Reduction Act of 1995. To request more information on the proposed project or to obtain a copy of the data collection plans and draft instruments, call the HRSA Reports Clearance Officer on (301) 443–1129.

Comments are invited on: (a) Whether the proposed collection of information is necessary for the proper performance of the functions of the Agency,

including whether the information shall have practical utility; (b) the accuracy of the Agency's estimate of the burden of the proposed collection of information; (c) ways to enhance the quality, utility, and clarity of the information to be collected; and (d) ways to minimize the burden of the collection of information on respondents, including the use of automated collection techniques or other forms of information technology.

Proposed Project: Health Professions Student Loan (HPSL) Program and Nursing Student Loan (NSL) Program Administrative Requirements (Regulations and Policy)(OMB No. 0915–0047)—Revision

The regulations for the Health Professions Student Loan (HPSL) Program and Nursing Student Loan (NSL) Program contain a number of reporting and recordkeeping requirements for schools and loan applicants. The requirements are essential for assuring that borrowers are aware of rights and responsibilities that schools know the history and status of each loan account that schools pursue aggressive collection efforts to reduce default rates and that they maintain adequate records for audit and assessment purposes. Schools are free to use improved information technology to manage the information required by the regulations.

The estimated total annual burden is 34,558 hours. The burden estimates are as follows:

RECORDKEEPING REQUIREMENTS

Regulatory/section requirements	Number of record-keepers	Hours per year	Total burden hours
HPSL Program:			
57.206(b)(2), Documentation of Cost of Attendance	275	1.17	322
57.208(a), Promissory Note	275	1.25	344
57.210((b)(1)(i), Documentation of Entrance Interview	275	1.25	344
57.210(b)(1)(ii), Documentation of Exit Interview	*302	0.33	100
57.215(a)&(d), Program Records	*302	10	3,020
57.215(b), Student Records	*302	10	3,020
57.215(c), Repayment Records	*302	18.75	5,663
HPSL Subtotal	302		12,813
NSL Program:			
57.306(b)(2)(ii), Documentation of Cost of Attendance	347	0.3	104
57.308(a), Promissory Note	347	0.5	174
57.310(b)(1)(i), Documentation of Entrance Interview	347	0.5	174
57.310(b)(1)(ii), Documentation of Exit Interview	*607	0.17	103
57.315(a)(1)&(a)(4), Program Records	*607	5	3,035
57.315(a)(2), Student Records	*607	1	607
57.315(a)(3), Repayment Records	*607	2.5	1,518
NSL Subtotal	607		5,715

*Includes active and closing schools.

REPORTING REQUIREMENTS

Regulatory/section requirements	Number of respondents	Responses per respondent	Total annual responses	Hours per response	Total hour burden
HPSL Program:					
57.205(a)(2), Excess Cash	Burden included under 0915–0044 and 0915–0045				
57.206(a)(2), Student Financial Aid Transcript	3,750	1	3,750	.25	938
57.208(c), Loan Information Disclosure	275	68.73	18,900	.0833	1,574
57.210(a)(3), Deferment Eligibility	Burden included under 0915–0044				
57.210(b)(1)(i), Entrance Interview	275	68.73	18,900	.0167	3,156
57.210(b)(1)(ii), Exit Interview	*302	12	3,624	0.5	1,812
57.210(b)(1)(iii), Notification of Repayment	*302	30.83	9,310	0.167	1,555
57.210(b)(1)(iv), Notification During Deferment	*302	24.32	7,344	0.0833	612
57.210(b)(1)(vi), Notification of Delinquent Accounts	*302	10.28	3,104	0.167	518
57.210(b)(1)(x), Credit Bureau Notification	*302	8.03	2,425	0.6	1,455
57.210(b)(4)(i), Write-off of Uncollectible Loans	20	1.00	20	0.5	10
57.211(a) Disability Cancellation	8	1	8	.75	6
57.215(a) Reports	Burden included under 0915–0044				
57.215(a)(2), Administrative Hearings	0	0	0	0	0
57.215(a)(d), Administrative Hearings	0	0	0	0	0
HPSL Subtotal	4,052		67,385		8,796
NSL Program:					

REPORTING REQUIREMENTS—Continued

Regulatory/section requirements	Number of respondents	Responses per respondent	Total annual responses	Hours per response	Total hour burden
57.305(a)(2), Excess Cash	Burden included under 0915–0044 and 0915–0046				
57.306(a)(2), Student Financial Aid Transcript	2,250	1	2,250	0.25	563
57.310(b)(1)(i), Entrance Interview	347	23.51	8,157	0.167	1,362
57.310(b)(1)(ii), Exit Interview	*607	3.77	2,288	0.5	1,144
57.301(b)(1)(iii), Notification of Repayment	*607	6.18	3,751	0.167	626
57.310(b)(1)(iv), Notification During Deferment	*607	0.65	395	0.083	33
57.310(b)(1)(vi), Notification of Delinquent Accounts	*607	4.61	2,798	0.167	467
57.310(b)(1)(x), Credit Bureau Notification	*607	8.3	5,038	0.6	3,023
57.310(b)(4)(i), Write-off of Uncollectible Loans	20	1.0	20	0.5	10
57.311(a), Disability Cancellation	7	1.0	7	0.8	5.6
57.312(a)(3), Evidence of Educational Loans	Inactive Provision				
57.315(a)(1), Reports	Burden included under 0915–044				
57.315(a)(1)(ii), Administrative Hearings	0	0	0	0	0
57.316(a)(d), Administrative Hearings	0	0	0	0	0
NSL Subtotal	2,857		24,704		7,234

*Includes active and closing schools.

Send comments to Susan G. Queen, Ph.D., HRSA Reports Clearance Officer, Room 11–05, Parklawn Building, 5600 Fishers Lane, Rockville, MD 20857. Written comments should be received within 60 days of this notice.

Dated: March 4, 2002.

Jane M. Harrison,

Director, Division of Policy Review and Coordination.

[FR Doc. 02–5668 Filed 3–8–02; 8:45 am]

BILLING CODE 4165–15–P

DEPARTMENT OF THE INTERIOR

Fish and Wildlife Service

Extension of Comment Period on the Draft Recovery Plan for Coastal Plants of the Northern San Francisco Peninsula

AGENCY: U.S. Fish and Wildlife Service, Interior.

ACTION: Extension of comment period.

SUMMARY: We, the U.S. Fish and Wildlife Service (Service), announce the extension of the comment period for the public review of the Draft Recovery Plan for Coastal Plants of the Northern San Francisco Peninsula for an additional 60 days from the date of publication of this notice in the **Federal Register**. The original comment period was to close on March 4, 2002. We are extending the comment period for an additional 60 days to allow additional time for public review of this draft recovery plan that includes the endangered San Francisco lessingia (*Lessingia germanorum*) and Raven's manzanita (*Arctostaphylos hookeri* ssp. *ravenii*). The portion of the plan dealing with Raven's manzanita is a revision of the 1984 Raven's Manzanita Recovery Plan. Additional species of concern that will benefit from recovery actions taken for these plants are also discussed in the draft recovery plan. The draft plan includes recovery criteria and measures for San Francisco lessingia and Raven's manzanita.

DATES: Comments on the draft recovery plan must be received on or before May 6, 2002.

ADDRESSES: Copies of the draft recovery plan are available for inspection, by appointment, during normal business hours at the following location: U.S. Fish and Wildlife Service, Sacramento Fish and Wildlife Office, 2800 Cottage Way, W–2605, Sacramento, California (telephone (916) 414–6600); and U.S. Fish and Wildlife Service, Regional Office, Ecological Services, 911 N.E. 11th Ave., Eastside Federal Complex, Portland Oregon 97232–4181 (telephone (503) 231–6131). Requests for copies of the draft recovery plan and written comments and materials regarding this plan should be addressed to Wayne S. White, Field Supervisor, Ecological Services, at the above Sacramento address.

FOR FURTHER INFORMATION CONTACT: Jan C. Knight, Chief, Endangered Species Division, Sacramento Fish and Wildlife Office, 2800 Cottage Way, Room W–2605, Sacramento, California 95825. Phone: (916) 414–6600.

SUPPLEMENTARY INFORMATION:

Background

Restoring endangered or threatened animals and plants to the point where they are again secure, self-sustaining members of their ecosystems is a primary goal of the Service's endangered species program. To help guide the recovery effort, the Service is working to prepare recovery plans for most of the listed species native to the United States. Recovery plans describe actions considered necessary for the conservation of the species, establish criteria for downlisting or delisting listed species, and estimate time and cost for implementing the recovery measures needed.

The Endangered Species Act of 1973, as amended (16 U.S.C. 1531 *et seq.*) (Act), requires the development of recovery plans for listed species unless such a plan would not promote the conservation of a particular species. Section 4(f) of the Act as amended in 1988 requires that public notice and an opportunity for public review and comment be provided during recovery plan development. The Service will consider information presented during the public comment period prior to

approval of each new or revised recovery plan. Substantive technical comments may result in changes to the plan. Substantive comments regarding recovery plan implementation may not necessarily result in changes to the recovery plan, but will be forwarded to appropriate Federal or other entities so that they can take these comments into account during the course of implementing recovery actions. Individual responses to comments will not be provided.

San Francisco lessingia and Raven's manzanita are restricted to the San Francisco peninsula in San Francisco County, California. San Francisco lessingia, an annual herb in the aster family, is restricted to coastal sand deposits. Raven's manzanita is a rare evergreen creeping shrub in the heath family which was historically restricted to few scattered serpentine outcrops. Habitat loss, adverse alteration of ecological processes, and invasion of non-native plant species threaten San Francisco lessingia. Raven's manzanita has also been threatened by habitat loss; primary current threats include invasion of non-native vegetation and fungal pathogens. The draft plan also makes reference to several other federally listed species which are ecologically associated with San Francisco lessingia and Raven's manzanita, but which are treated comprehensively in other recovery plans. These species are beach layia (*Layia carnosa*), Presidio clarkia (*Clarkia franciscana*), Marin dwarf-flax (*Hesperolinon congestum*), Myrtle's silverspot butterfly (*Speyere zerene myrtleae*), and bay checkerspot butterfly (*Euphydryas editha bayensis*). In addition, 16 plant species of concern and 17 plant species of local or regional conservation significance are considered in this recovery plan.

The draft recovery plan stresses re-establishing dynamic, persistent populations of San Francisco lessingia and Raven's manzanita within plant communities which have been restored to be as ''self-sustaining'' as possible within urban wildland reserves. Specific recovery actions for San Francisco lessingia focus on the restoration and management of large, dynamic mosaics of coastal dune areas supporting shifting populations within the species' narrow historic range. Recovery of Raven's manzanita may include, but may not be limited to, the strategy of the 1984 Raven's Manzanita Recovery Plan, which emphasized the stabilization of the single remaining genetic individual. The draft plan also recommends re-establishing multiple sexually reproducing populations of Raven's manzanita in association with its historically associated species of local serpentine outcrops. The objectives of this recovery plan are to delist San Francisco lessingia and to downlist Raven's manzanita through implementation of a variety of recovery measures including (1) Protection and restoration of a series of ecological reserves (often with mixed recreational and conservation park land uses); (2) promotion of population increases of San Francisco lessingia and Raven's manzanita within these sites, or reintroducion of them to restored sites; (3) management of protected sites, especially the extensive eradication or suppression of invasive dominant non-native vegetation; (4) research; and (5) public participation, outreach and education.

Public Comments Solicited

The Service solicits written comments on the recovery plan described. All comments received by the date specified above will be considered prior to approval of this plan.

Authority: The authority for this action is section 4(f) of the Endangered Species Act, 16 U.S.C. 1533(f).

Dated: March 4, 2002.

Duane K. McDermond,

Deputy Manager, California/Nevada Operations Office, Sacramento, California.

[FR Doc. 02–5689 Filed 3–8–02; 8:45 am]

BILLING CODE 4310–55–P

DEPARTMENT OF THE INTERIOR

Fish and Wildlife Service

Notice of Meeting of the Klamath River Basin Fisheries Task Force

AGENCY: Fish and Wildlife Service, Interior.

ACTION: Notice of meeting.

SUMMARY: Pursuant to section 10(a)(2) of the Federal Advisory Committee Act (5 U.S.C. App. I), this notice announces a meeting of the Klamath River Basin Fisheries Task Force, established under the authority of the Klamath River Basin Fishery Resources Restoration Act (16 U.S.C. 460ss *et seq.*). The meeting is open to the public. The purpose of the meeting is to continue providing recommendations from the affected interests to the Department of the Interior on implementation of their program to restore anadromous fisheries, including salmon and steelhead, of the Klamath River in California and Oregon.

DATES: The Klamath River Basin Fisheries Task Force (Task Force) will meet from 9 a.m. to 5 p.m. on June 19, 2002, and from 8 a.m. to 5 p.m. on June 20, 2002.

ADDRESSES: The meeting will be held at the Yurok Tribal office, Highway 96, Weitchpec, CA.

FOR FURTHER INFORMATION CONTACT: Phil Detrich, Project Leader, U.S. Fish and Wildlife Service, 1829 South Oregon Street, Yreka, California 96097, telephone (530) 842–5763.

SUPPLEMENTARY INFORMATION: For background information on the Task Force, please refer to the notice of their initial meeting that appeared in the **Federal Register** on July 8, 1987 (52 FR 25639).

Dated: March 4, 2002.

John Engbring,

Acting Manager, California/Nevada Operations Office, Sacramento, California.

[FR Doc. 02–5687 Filed 3–8–02; 8:45 am]

BILLING CODE 4310–55–P

DEPARTMENT OF THE INTERIOR

Fish and Wildlife Service

Notice of Meeting of the Klamath River Basin Fisheries Task Force

AGENCY: Fish and Wildlife Service, Interior.

ACTION: Notice of meeting.

SUMMARY: Pursuant to section 10(a)(2) of the Federal Advisory Committee Act (5 U.S.C. App. I), this notice announces a meeting of the Klamath River Basin Fisheries Task Force, established under the authority of the Klamath River Basin Fishery Resources Restoration Act (16 U.S.C. 460ss *et seq.*). The meeting is open to the public. The purpose of the meeting is to continue providing recommendations from the affected interests to the Department of the Interior on implementation of their program to restore anadromous fisheries, including salmon and steelhead, of the Klamath River in California and Oregon.

DATES: The Klamath River Basin Fisheries Task Force (Task Force) will meet from 9 a.m. to 5 p.m. on October 16, 2002, and from 8 a.m. to 5 p.m. on October 17, 2002.

ADDRESSES: The meeting will be held at the Shilo Inn, 2500 Almond Street, Klamath Falls, OR.

FOR FURTHER INFORMATION CONTACT: Phil Detrich, Project Leader, U.S. Fish and Wildlife Service, 1829 South Oregon Street, Yreka, California 96097, telephone (530) 842–5763.

SUPPLEMENTARY INFORMATION: For background information on the Task Force, please refer to the notice of their

initial meeting that appeared in the **Federal Register** on July 8, 1987 (52 FR 25639).

Dated: March 4, 2002.

John Engbring,

Acting Manager, California/Nevada Operations, Sacramento, California.

[FR Doc. 02–5688 Filed 3–8–02; 8:45 am]

BILLING CODE 4310–55–P

DEPARTMENT OF THE INTERIOR

Bureau of Indian Affairs

Determination of Trust Land Acquisition

AGENCY: Bureau of Indian Affairs, Interior.

ACTION: Notice.

SUMMARY: The Bureau of Indian Affairs (BIA) is publishing this notice to provide notification of the determination that public Law 98–602 land settlement claim funds were used to purchase trust land in Kansas City, Kansas for the Wyandotte Tribe of Oklahoma (Tribe).

FOR FURTHER INFORMATION CONTACT: George T. Skibine, Director, Office of Indian Gaming Management, Bureau of Indian Affairs 1849 C Street NW, MS–2070 MIB, Washington, DC 20240; by telephone at (202) 219–4066 (this is not a toll-free number); or by telefax at (202) 273–3153.

SUPPLEMENTARY INFORMATION: This notice is published in exercise of authority delegated to the Assistant Secretary—Indian Affairs by 209 DM 8 and in accordance with 5 U.S.C. 2, 9, 2710.

Background

The statutory authority for the Wynadotte Tribe's acquisition of the Kansas City tract (Shriner's Building) is Public Law 98–602, 98 Stat. 3149, enacted on October 30, 1984. It expressly provides that ''$100,000 of such funds shall be used for the purchase of real property which shall be held in trust by the Secretary for the Tribe.'' Public Law 98–602 § 105(b)(1). When section 602 funds were received by Wyandotte Tribe of Oklahoma, the Tribe purchased $100,000 of mortgage obligation bonds on May 14, 1986. Interest and bond dividend earnings were retained in an existing cash account. As bonds were redeemed and additional bonds purchased, the funds flowed through the cash account, which contained other tribal monies.

Beginning in 1989 the Tribe held an investment account which paid some dividends and interests directly to the Tribe's main accounts. In December 1991, the Tribe eliminated one account and combined the section 602 funds (principal, cash, dividends, and interest) into its main investment account.

At the time of the July 12, 1996 disbursement of $180,000 for the Shriner's Building purchase, the remaining accumulated amount of section 602 funds and the dividends and interest of those funds, was $212,169.65.

An analysis of the accumulation of interest and dividends on section 602 funds was completed by KPMG, L.L.P., a public accounting firm. The analysis procedures included tracing balances from bank account statements, testing the appropriateness of the allocation of interest and dividends to section 602 funds and other funds deposited in the main account, tracing the use of the section 602 funds to purchases and sell securities, and the mathematical accuracy of the analysis. KMPG ''found that the computations were appropriate and that the ending value that resulted from the initial $100,000 investment was $121,170 at the time of the land purchase.'' The analysis and findings were presented to the Tribe in a November 26, 2001 letter from KPMG.

Determination

The Secretary of the Interior has determined that the funds used to purchase the Shriner's Property in Kansas City, Kansas were from the section 602 settlement of specific land claims. The Secretary affirms that trust status of the subject lands.

Dated: February 22, 2002.

Neal A. McCaleb,

Assistant Secretary—Indian Affairs.

[FR Doc. 02–5760 Filed 3–8–02; 8:45 am]

BILLING CODE 4310–4N–M

DEPARTMENT OF THE INTERIOR

National Park Service

National Register of Historic Places; Notice on NHL Boundaries

The National Park Service has been working to establish boundaries for all National Historic Landmarks for which no specified boundary was identified at the time of designation and therefore are without a clear delineation of the property involved.

In accordance with the National Historic Landmark program regulations 36 CFR 65, the National Park Service notifies owners, public officials and other interested parties and gives them an opportunity to comment on the proposed boundary documentation.

The 60-day comment period on the National Historic Landmark listed below has ended and the boundary documentation has been approved. Copies of the documentation of the landmark and its boundaries, including maps, may be obtained from the National Register of Historic Places, National Park Service, 1849 C Street, Northwest, Suite NC 400, Washington, D.C. 20240, Attention: Sarah Pope (phone: 202–343–9536; e-mail: *sarah_pope@nps.gov*).

Grant-Kohrs National Historic Landmark

Deer Lodge, Powell County, Montana

Designated a Landmark on December 19, 1960

Carol D. Shull,

Chief of the National Historic Landmarks Survey and Keeper of the National Register; National Register, History and Education.

[FR Doc. 02–5705 Filed 3–8–02; 8:45 am]

BILLING CODE 4310–70–P

DEPARTMENT OF THE INTERIOR

National Park Service

National Register of Historic Places; Notification of Pending Nominations

Nominations for the following properties being considered for listing in the National Register were received by the National Park Service before February 16, 2002. Pursuant to § 60.13 of 36 CFR part 60 written comments concerning the significance of these properties under the National Register criteria for evaluation may be forwarded by United States Postal Service, to the National Register of Historic Places, National Park Service, 1849 C St. NW., NC400, Washington, DC 20240; by all other carriers, National Register of Historic Places, National Park Service, 800 N. Capitol St.NW, Suite 400, Washington DC 20002; or by fax, 202–343–1836 . Written or faxed comments should be submitted by March 26, 2002.

Carol D. Shull,

Keeper of the National Register of Historic Places.

ARKANSAS

Garland County

Orange Street Presbyterian Church, 428 Orange St., Hot Springs, 02000259

Greene County

Highfill—McClure House, 701 W. Highland St., Paragould, 02000260

Pope County

Pottsville Citizen's Bank, 156 E. Ash St., Pottsville, 02000261

COLORADO

Denver County

Dickinson Branch Library, 1545 Hooker St., Denver, 02000262

Phillips County

Shirley Hotel, 101 S. Colorado Ave., Haxtun, 02000263

FLORIDA

Hillsborough County

North Franklin Street Historic District, Roughly bounded by Florida Ave., E. Fortune, Tampa, Franklin and E. Harrison Sts., Tampa, 02000264

Palm Beach County

Evans, J.B., House, 142 S. Ocean Bvd., Delray Beach, 02000265

Polk County

Interlaken Historic Residential District (Winter Haven, Florida MPS), Roughly bounded by N. Shore Lake Howard, SW. Shore Lake Mirror and Cannon-Howard Canal, Winter Haven, 02000266

LOUISIANA

Bossier Parish

Bossier City Municipal Building, 630 Barksdale Rd., Bossier City, 02000267

East Baton Rouge Parish

Dufrocq School, 330 S. 19th St., Baton Rouge, 02000268

East Feliciana Parish

Clear Creek AME Church, Approx. ½ mi. S. of Jct. LA 961 and LA 432, Felixville, 02000269

MARYLAND

Washington County

Maryland Heights, Spur Battery (Harpers Ferry National Historical Park MPS), Hoffmaster Rd., Sandy Hook, 02000286

MISSOURI

St. Louis Independent City

Moloney Electric Company Building, 1141–1151 S. 7th St., Saint Louis, 02000270

NEBRASKA

Clay County

Inland School (School Buildings in Nebraska MPS), Jct. NWC East Ave. and Edison St., Inland, 02000271

Douglas County

Ackerhurst—Eipperhurst Dairy Barn, 15220 Military Rd., Bennington, 02000272

Wayne County

Wayne Municipal Auditorium, 222 N. Pearl St., Wayne, 02000273

NEW JERSEY

Monmouth County

Camp Evans Historic District, 2201 Marconi Rd. (Wall Township), New Bedford, 02000274

NORTH CAROLINA

Stanly County

Downtown Albemarle Historic District, Portions of S. 2nd, W. Main and N. and S. 1st Sts., Albemarle, 02000275

TEXAS

Harris County

Sam Houston Hotel, 1119 Prairie St., Houston, 02000276

VERMONT

Caledonia County

Ricker Pond State Park (Historic Park Landscapes in National and State Parks MPS), 526 State Forest Rd., Groton, 02000277

Stillwater State Park (Historic Park Landscapes in National and State Parks MPS), 126 Boulder Beach Rd., Groton, 02000278

Lamoille County

Elmore State Park (Historic Park Landscapes in National and State Parks MPS), 856 VT 12, Elmore, 02000279

Orange County

Allis State Park (Historic Park Landscapes in National and State Parks MPS), RR 2, Box 192, Brookfield, 02000280

Windsor County

Coolidge State Park (Historic Park Landscapes in National and State Parks MPS), 855 Coolidge State Park Rd., Plymouth, 02000281

Wilgus State Park,

(Historic Park Landscapes in National and State Parks MPS), 3985 US Route 5, Weatherfield, 02000282

WEST VIRGINIA

Jefferson County

Bollman—Wernwag—Latrobe Bridge (Harpers Ferry National Historical Park MPS), Confluence Potomac and Shenandoah Rs., Harpers Ferry, 02000287

WISCONSIN

Fond Du Lac County

Cole, William I, House, 303 Gillett St., Fond du Lac, 02000283

Kewaunee County

Major Wilbur Fr. Browder (tugboat), Harbor Park, Kilbourn St., Kewaunee, 02000284

Outagamie County

Barteau Bridge, N. of WI 187 crossing of Shioc R., Bovina, 02000285

A request for REMOVAL has been made for the following resource:

NEBRASKA

Douglas County

Jobbers' Canyon Historic District, Roughly bounded by Farnum, Eighth, Jackson, and Tenth Sts. Omaha, 86003408

A request for a MOVE has been made for the following resource:

NEBRASKA

Otoe County

Little Nemaha River Bridge (Highway Bridges in Nebraska MPS), Co. Rd. over the Little Nemaha R., 3 mi. NW of Syracuse, Syracuse, 92000723

[FR Doc. 02–5704 Filed 3–8–02; 8:45 am]

BILLING CODE 4310–70–P

DEPARTMENT OF THE INTERIOR

National Park Service

National Register of Historic Places; Notification of Pending Nominations

Nominations for the following properties being considered for listing in the National Register were received by the National Park Service before February 23, 2002.

Pursuant to § 60.13 of 36 CFR Part 60 written comments concerning the significance of these properties under the National Register criteria for evaluation may be forwarded by United States Postal Service, to the National Register of Historic Places, National Park Service, 1849 C St. NW, NC400, Washington, DC 20240; by all other carriers, National Register of Historic Places, National Park Service, 800 N. Capitol St. NW, Suite 400, Washington DC 20002; or by fax, 202–343–1836 . Written or faxed comments should be submitted by March 26, 2002.

Paul R. Lusignan,

Acting Keeper of the National Register of Historic Places.

COLORADO

Denver County

Photography and Armament School Buildings, Lowry Air Force Base, 125 and 130 Rampart Way and 7600 East First Place, Denver, 02000288

Morgan County

Morgan County Courthouse and Jail, 225 Ensign and 218 West Kiowa, Fort Morgan, 02000289

Pitkin County

Ute Cemetery, Ute Ave., Aspen, 02000291

Weld County

Nettleton—Mead House, 1303 9th Ave., Greeley, 02000290

GEORGIA

Cherokee County

Canton Cotton Mills No. 2, 200 Ball Ground Hwy., Canton, 02000293

Thomas County

Paradise Park Historic District (Boundary Increase), 502 S. Broad St., Thomasville, 02000292

IOWA

Polk County

Evans, Edward B. and Nettie E., House, 1410 19th St., Des Moines, 02000294

LOUISIANA

Pointe Coupee Parish

Valverda Plantation House, 2217 LA 977, Maringouin, 02000297

Tensas Parish

Waterproof High School, Main St., bet. Church Ln. and Mississippi St., Waterproof, 02000296

MICHIGAN

Cass County

First Methodist Episcopal Church of Pokagon, 60041 Vermont St., Pokagon Township, 02000295

NEVADA

Lander County

Toquima Cave, Humboldt—Toiyabe National Forest, Austin, 02000298

NEW YORK

Chenango County

Upperville Meeting House, NY 80, Upperville, 02000307

Delaware County

Van Benschoten House and Guest House, Margaretville Mountain Rd., Margaretville, 02000302

Dutchess County

Beth David Synagogue, E. Main St., Amenia, 02000308 Indian Rock Schoolhouse, Mygatt Rd., Amenia, 02000306

Genesee County

Batavia Cemetery, Harvester Ave., Batavia, 02000309

Monroe County

First Presbyterian Church of Mumford, George and William Sts., Mumford, 02000299

Montgomery County

Enlarged Double Lock No. 33 Old Erie Canal, Towpath Rd., St. Johnsville, 02000315

Queens County

Long Island Motor Parkway, Roughly Alley Pond and Cunningham Parks, bet. Winchester Blvd. and Clearview Expressway, bet. 73rd Ave. and Peck Ave., Queens, 02000301

Saratoga County

Barker General Store, 1 Military Rd., Beecher Hollow, 02000303

St. Lawrence County

First Presbyterian Church of Dailey Ridge, 411 Elliot Rd., Potsdam, 02000300

Tioga County

Evergreen Cemetery, East Ave., bet. Erie St. and Prospect St., Owego, 02000305
First Methodist Episcopal Church of Tioga Center, NY 17C, Tioga, 02000304

VIRGINIA

Fluvanna County

Laughton, VA 623, Kents Store, 02000318
Western View, VA 658, Fork Union, 02000320

Hanover County

Spring Green, 2160 Old Church Rd., Mechanicsville, 02000316

Northampton County

Almshouse Farm at Machipongo, 12402 Lankford Hwy., Machipongo, 02000317
Brown's, James, Dry Goods Store, 16464 Courthouse Rd., Eastville, 02000321

Southampton County

Aspen Lawn, 4438 Hiscksford Rd., Drewryville, 02000319

Washington County

Pitts, Dr. William H., House, 247 E. Main St., Abingdon, 02000322

WASHINGTON

Cowlitz County

Modrow Bridge (Bridges and Tunnels Built in Washington State, 1951–1960 MPS) Modrow Rd. over Kalama R., Kalama, 02000310

King County

Foss River Bridge (Bridges and Tunnels Built in Washington State, 1951–1960 MPS) Jack Bird Rd. No. 89440 over Foss R., Skykomish, 02000312
Mt. Si Bridge (Bridges and Tunnels Built in Washington State, 1951–1960 MPS) Mount Si Rd. over Middle Fork of the Snoqualmia R., North Bend, 02000324
Stossel Bridge (Bridges and Tunnels Built in Washington State, 1951–1960 MPS), NE Carnation Farm Rd. over Snoqualmie R., Carnation, 02000325

Klickitat County

B–Z Corner Bridge (Bridges and Tunnels Built in Washington State, 1951–1960 MPS), B–Z Corner—Glenwood Rd. over White Salmon River, B–Z Corner, 02000314

Skagit County

Dalles Bridge (Bridges and Tunnels Built in Washington State, 1951–1960 MPS), Concrete Sauk Valley Rd. across the Skagit R., Concrete, 02000323
Rainbow Bridge, Pioneer Parkway over the Swinomish Channel, La Conner, 02000313

Skamania County

Conrad Lundy Jr. Bridge (Bridges and Tunnels Built in Washington State, 1951–1960 MPS), Wind River Rd. over Wind River Canyon, Carson, 02000326

Snohomish County

Red Bridge (Bridges and Tunnels Built in Washington State, 1951–1960 MPS), Mountain Loop Hwy. over Stillaguamish R., Silverton, 02000311

WISCONSIN

Fond Du Lac County

Ebert, Rudolph and Louise, House, 199 E. Division St., Fond du Lac, 02000327

[FR Doc. 02–5706 Filed 3–8–02; 8:45 am]

BILLING CODE 4310–70–P

DEPARTMENT OF THE INTERIOR

Bureau of Reclamation Fish and Wildlife Service

Imperial Irrigation District Water Conservation and Transfer Project, Draft Habitat Conservation Plan, California [INT–DES–01–44], Notice of Public Hearings

AGENCIES: Bureau of Reclamation and Fish and Wildlife Service, Interior.

ACTION: Notice of public hearings.

SUMMARY: Pursuant to the National Environmental Policy Act of 1969, as amended (NEPA), and the Council on Environmental Quality's Regulations for Implementing the Procedural Provisions of NEPA, on January 18, 2002, the Bureau of Reclamation (Reclamation) filed a draft environmental impact report/environmental impact statement (EIR/EIS) on Imperial Irrigation District's (IID) proposed Water Conservation and Transfer Project, Draft Habitat Conservation Plan (HCP). The Fish and Wildlife Service (Service) is a cooperating agency in the preparation of this EIR/EIS (pursuant to 40 CFR 1501.6).

Under the proposed project, IID would conserve and transfer the right to use up to 300,000 acre-feet per year of Colorado River water, which IID is otherwise entitled to divert for use within IID's water service area in Imperial County, California. The conserved water would be transferred to San Diego County Water Authority, Coachella Valley Water District and/or The Metropolitan Water District. These transfers, which are to remain in effect for up to 75 years, would facilitate efforts to reduce California's diversion of Colorado River water in normal years to its annual 4.4 million acre-feet apportionment. The Secretary of the Interior is expected to approve the change in the point of delivery for the transferred water by executing an Implementation Agreement, the environmental impacts of which are disclosed in the ''Implementation Agreement, Inadvertent Overrun and Payback Policy, and Related Federal Actions Draft EIS'' (INT–DES–01–43) and the ''Biological Assessment for Proposed Interim Surplus Criteria, Secretarial Implementation Agreements

for California Water Plan Components and Conservation Measures on the Lower Colorado River (Lake Mead to the Southerly International Boundary)'' dated August 30, 2000. In addition, IID is applying for a permit with the Service pursuant to section 10(a)(1)(B) of the Endangered Species Act (ESA). This Section 10 permit would authorize the incidental take of covered species associated with the proposed water conservation and transfer project, as well as IID's ongoing operation and maintenance activities. As a condition of applying for a Section 10 permit, IID has developed a HCP in consultation with the Service and the California Department of Fish and Game, which is appended to the draft EIR/EIS. The HCP provides measures to minimize and mitigate the effects of the proposed taking of listed and sensitive species and the habitats upon which they depend. Issuance of a permit pursuant to Section 10(a)(1)(B) is a Federal action requiring evaluation under NEPA, and implementation of the HCP is addressed in the draft EIR/EIS. Additional information regarding the HCP is provided in **SUPPLEMENTARY INFORMATION**, below. The analysis in the draft EIR/EIS is intended to inform the public of the proposed action and alternatives; address public comments received during the scoping period; disclose the direct, indirect, and cumulative environmental effects of the proposed action and each of the alternatives; and indicate any irreversible commitment of resources that would result from implementation of the proposed action.

Public hearings have been scheduled to receive written or verbal comments on the draft EIR/EIS from interested organizations and individuals on the environmental impacts of the proposed project and implementation of the HCP.

DATES: Public hearings are scheduled to be held to receive written or oral comments about the draft EIR/EIS from interested organizations and individuals, on the adequacy with which the draft EIR/EIS identifies and describes the potential impacts associated with approving and implementing the proposed Federal actions. The hearings will be held on:

- April 2, 2002, 5 p.m., in La Quinta*, California.
- April 3, 2002, 5 p.m., in El Centro*, California.
- April 4, 2002, 5 p.m., in San Diego, California.

(*) A Spanish interpreter will be present.

Written comments will continue to be accepted until April 26, 2002, the end of the public review and comment period (see **ADDRESSES**, below). (The end of the public review and comment period identified in the original notice of availability (67 FR 3732, Jan. 25, 2002) was in error.)

Oral comments made at the public hearings may address the water conservation and transfer project and/or the HCP; they will be limited to 5 minutes. Time permitting, the meeting facilitator will allow any speaker to provide additional oral comments after all persons wishing to comment have been heard. A court reporter will prepare a written record of all comments made; however, commentors are encouraged to provide a written copy of their statement. If you would like to sign up in advance to provide oral comments, please contact Ms. Janice Kjesbo at (602) 216–3864, faxogram (602) 216–4006, by March 29, 2002. Hearing impaired, visually impaired, and/or mobility impaired persons planning to attend the meeting(s) may arrange for necessary accommodations by contacting Ms. Kjesbo no later than March 15, 2002.

ADDRESSES: The hearings will be held at the following locations:

- La Quinta*—IID Board Room, 81–600 Ave. 58, La Quinta, California 92253.
- El Centro*—IID Auditorium, 1284 Broadway, El Centro, California 92243.
- San Diego—San Diego County Water Authority Board Room, 4677 Overland Ave., San Diego, California 92123.

(*) A Spanish interpreter will be present.

Written comments regarding the adequacy of the document will continue to be accepted until April 26, 2002, to Mr. Bruce Ellis, Chief, Environmental Resources Management Division, Bureau of Reclamation, Phoenix Area Office (PXAO–1500), PO Box 81169, Phoenix, AZ 85069–1169, fax number (602) 216–4006; or Mr. Elston Grubaugh, Manager, Resource Planning and Management Department, Imperial Irrigation District, PO Box 937, Imperial, CA 92251, fax number (760) 339–9009.

FOR FURTHER INFORMATION CONTACT: Questions regarding the draft EIR/EIS should be directed to Mr. Ellis at the Phoenix Area Office address provided above, or telephone (602) 216–3854. For information related to the HCP, please contact Ms. Carol Roberts at the Carlsbad Fish and Wildlife Service office, telephone (760) 431–9440.

SUPPLEMENTARY INFORMATION: Section 9 of the ESA and Federal regulation prohibit the ''take'' of fish and wildlife species listed as endangered or threatened. Take of listed fish or wildlife is defined under the ESA to include kill, harm, or harass. Harm includes significant habitat modification or degradation that actually kills or injures listed wildlife by significantly impairing essential behavioral patterns, including breeding, feeding, and sheltering (50 CFR 17.3(c)). Under limited circumstances, the Service may issue permits to authorize incidental take; *i.e.,* take that is incidental to, and not the purpose of, otherwise lawful activity. Regulations governing incidental take permits for threatened and endangered species are found in 50 CFR 17.32 and 17.22, respectively. Pursuant to section 10(a)(1)(B) of the ESA, IID has developed an HCP. The IID HCP is intended to address the impacts of the incidental take potentially resulting from the water conservation and transfer project, and ongoing operations and maintenance activities. A total of 96 species are proposed for coverage, including 10 federally-listed and two proposed species. A series of strategies have been developed to address impacts in the drain, desert, tamarisk scrub, agricultural, and Salton Sea habitats. Specific strategies have been developed for the Burrowing Owl, desert pupfish, and razorback sucker. The strategies include the creation of freshwater marsh and native tree habitat, worker education programs, timing restrictions on some covered activities, and research efforts to identify more specifically the needs of some covered species in order to avoid, minimize, and mitigate the impacts of the incidental take. The draft EIR/EIS evaluates the impacts of implementing the HCP.

It is anticipated that IID will be submitting its Incidental Take Permit Application in the near future. Upon receipt of the application package, the Service will publish a separate notice in the **Federal Register** announcing the receipt of the application and the draft Implementing Agreement, and their availability for public review.

Comments received on the draft EIR/EIS become part of the public record associated with this action. Accordingly, Reclamation makes these comments, including names and home addresses of respondents, available for public review. Individual respondents may request that we withhold their home address from public disclosure, which we will honor to the extent allowable by law. There also may be circumstances in which we would withhold a respondent's identity from public disclosure, as allowable by law. If you wish us to withhold your name and/or address, you must state this

prominently at the beginning of your comment. However, we will not consider anonymous comments. We will make all submissions from organizations or businesses, and from individuals identifying themselves as representatives or officials of organizations or businesses, available for public disclosure in their entirety.

Dated: February 26, 2002.

Willie Taylor,

Director, Office of Environmental Policy and Compliance.

[FR Doc. 02–5776 Filed 3–8–02; 8:45 am]

BILLING CODE 4310–MN–P

DEPARTMENT OF THE INTERIOR

Office of Surface Mining Reclamation and Enforcement

Notice of Proposed Information Collection

AGENCY: Office of Surface Mining Reclamation and Enforcement.

ACTION: Notice and request for comments.

SUMMARY: In compliance with the Paperwork Reduction Act of 1995, the Office of Surface Mining Reclamation and Enforcement (OSM) is announcing that the information collection requests for the titles described below have been forwarded to the Office of Management and Budget (OMB) for review and comment. The information collection requests describe the nature of the information collections and the expected burden and cost for 30 CFR parts 750 and 877.

DATES: OMB has up to 60 days to approve or disapprove the information collections but may respond after 30 days. Therefore, public comments should be submitted to OMB by April 10, 2002, in order to be assured of consideration.

FOR FURTHER INFORMATION CONTACT: To request a copy of either information collection request, explanatory information and related form, contact John A. Trelease at (202) 208–2783, or electronically to *jtreleas@osmre.gov.*

SUPPLEMENTARY INFORMATION: OMB regulations at 5 CFR 1320, which implement provisions of the Paperwork Reduction Act of 1995 (Pub. L. 104–13), require that interested members of the public and affected agencies have an opportunity to comment on information collection and recordkeeping activities [see 5 CFR 1320.8(d)]. OSM has submitted two requests to OMB to renew its approval of the collections of information contained in: 30 CFR part 750, Requirements for surface coal mining and reclamation operations on Indian Lands; and 30 CFR part 877, Rights of entry. OSM is requesting a 3-year term of approval for each information collection activity.

An agency may not conduct or sponsor, and a person is not required to respond to, a collection of information unless it displays a currently valid OMB control number. The OMB control numbers for these collections of information are 1029–0091 for part 750, and 1029–0055 for part 877.

As required under 5 CFR 1320.8(d), a **Federal Register** notice soliciting comments for these collections of information was published on December 21, 2001 (66 FR 246). No comments were received. This notice provides the public with an additional 30 days in which to comment on the following information collection activities:

Title: Requirements for surface coal mining and reclamation operations on Indian Lands—30 CFR part 750.

OMB Control Number: 1029–0091.

Summary: Operators who conduct or propose to conduct surface coal mining and reclamation operations on Indian lands must comply with the requirements of 30 CFR 750 pursuant to Section 710 of SMCRA.

Bureau Form Number: None.

Frequency of Collection: Once.

Description of Respondents: Applicants for coal mining permits.

Total Annual Responses: 75.

Total Annual Burden Hours: 1,400.

Title: Rights of Entry—30 CFR part 877.

OMB Control Number: 1029–0055.

Summary: This regulation establishes procedures for non-consensual entry upon private lands for the purpose of abandoned mine land reclamation activities or exploratory studies when the landowner refuses consent or is not available.

Bureau Form Number: None.

Frequency of Collection: Once.

Description of Respondents: State abandoned mine land reclamation agencies.

Total Annual Responses: 20.

Total Annual Burden Hours: 20.

Send comments on the need for the collections of information for the performance of the functions of the agency; the accuracy of the agency's burden estimates; ways to enhance the quality, utility and clarity of the information collections; and ways to minimize the information collection burdens on respondents, such as use of automated means of collections of the information, to the following addresses. Please refer to the appropriate OMB control numbers in all correspondence.

ADDRESSES: Office of Information and Regulatory Affairs, Office of Management and Budget, Attention: Department of Interior Desk Officer, 725 17th Street, NW., Washington, DC 20503. Also, please send a copy of your comments to John A. Trelease, Office of Surface Mining Reclamation and Enforcement, 1951 Constitution Ave, NW., Room 210—SIB, Washington, DC 20240, or electronically to *jtreleas@osmre.gov.*

Dated: February 19, 2002.

Richard G. Bryson,

Chief, Division of Regulatory Support.

[FR Doc. 02–5669 Filed 3–8–02; 8:45 am]

BILLING CODE 4310–05–M

DEPARTMENT OF JUSTICE

Notice of Lodging of Consent Decree Under the Comprehensive Environmental Response, Compensation, and Liability Act

Notice is hereby given that on February 14, 2002, a proposed consent decree in *United States* v. *Kenneth H. Hunter, Jr., et al.,* Civil No. 97–9449 CAS (RZx), was lodged with the United States District Court for the Central District of California.

This consent decree represents a settlement of claims brought against Kenneth H. Hunter, Jr., Hunter Resources, and Casmalia Resources (''defendants'') relating to the Casmalia Resources Hazardous Waste Disposal Site (''Site'') located near Casmalia, California. The United States alleged in its complaint that the defendants owned and/or operated the Site and seeks the recovery of response costs incurred and to be incurred related to the Site pursuant to the Comprehensive Environmental Response, Compensation, and Liability Act, 42 U.S.C. 9601 *et seq.*

The consent decree requires the defendants to pay $6.957 million and imposes limitations on property owned by Casmalia Resources. The defendants also waive any claim that they may have to the Casmalia Closure/Post-Closure Trust Fund, which is currently valued in excess of $13 million. The consent decree also provides protection to certain peripheral parties.

The Department of Justice will receive, for a period of sixty (60) days from the date of this publication, comments relating to the consent decree. Comments should be addressed to the Assistant Attorney General, Environment and Natural Resources Division, P.O. Box 7611, U.S. Department of Justice, Washington, DC

20044–7611, and should refer to *United States* v. *Kenneth H. Hunter, Jr., et al.,* DOJ Ref. 90–7–1–611D. A copy of all comments should also be sent to Bradley R. O'Brien, U.S. Department of Justice, Environment and Natural Resources Division, Environmental Enforcement Section, 301 Howard Street, Suite 1050, San Francisco, CA 94105. A public hearing will also be scheduled on this proposed settlement.

The consent decree may be examined at U.S. EPA Region 9, 75 Hawthorne Street, San Francisco, California. A copy of the consent decree may also be obtained by mail from the Consent Decree Library, P.O. Box 7611, U.S. Department of Justice, Washington, DC 20044–7611. In requesting a copy, please refer to *United States* v. *Kenneth H. Hunter, Jr., et al.* Civil No. 97–9449 CAS (RZx), DOJ Ref. 90–7–1–611D, and enclose a check in the amount of $72.25 (25 cents per page reproduction cost) payable to the Consent Decree Library.

Ellen M. Mahan,

Assistant Chief, Environmental Enforcement Section, Environment and Natural Resources Division.

[FR Doc. 02–5671 Filed 3–8–02; 8:45 am]

BILLING CODE 4410–15–M

DEPARTMENT OF JUSTICE

Notice of Lodging of Consent Decree Under Safe Drinking Water Act

In accordance with Departmental Policy, 28 CFR 50.7, notice is hereby given that on February 22, 2002, a proposed consent decree in *United States* v. *Arturo C. Muro and Manuela B. Muro,* Case No. 00cv1484–B(POR) was lodged with the United States District Court for the Southern District of California.

This consent decree represents a settlement of claims brought against Arturo C. Muro and Manuela B. Muro, in a civil complaint that was filed on July 25, 2000, for violations of the Safe Drinking Water Act, 42 U.S.C. 300f to 300j–26 (the ''SDWA''), at a trailer park that is owned and operated by the Muros in the County of San Diego, California. The complaint alleged that the Muros failed to comply with a Finding Of Imminent And Substantial Endangerment To The Health Of Persons And Administrative Order (Docket No. PWS–EO–99–004) (the ''Emergency Administrative Order'') that the United States Environmental Protection Agency (''EPA'') had issued on May 21, 1999, pursuant to the SDWA, 42 U.S.C. 300i(a). EPA had issued the Emergency Administrative Order because contaminants, including total coliform bacteria and *E. coli* bacteria (*i.e.,* fecal coliform), present in and likely to enter a public water system owned and/or operated by the Muros may have presented an imminent and substantial endangerment to the health of persons who were or might have been users of the public water system, because the public water system and the accompanying wastewater system suffered from serious deficiencies which were a likely source of contamination of the water provided by the public water system, and because EPA had determined that the directives contained in the Emergency Administrative Order were necessary in order to protect the health of persons who were or might have been users of the public water system. The complaint sought: (1) Enforcement of the Emergency Administrative Order; (2) assessment of civil penalties for repeated and continuing violations of the Emergency Administrative Order; and (3) abatement of conditions that presented an imminent and substantial endangerment to the health of persons who were or might have been users of the Muros' public water system.

The proposed consent decree requires the Muros to, among other things: (1) Refrain from operating or allowing any other individual or entity to operate any public water system, as that term is defined in the SDWA, or providing or allowing any other individual or entity to provide water by any means, at the Muro's trailer park for any purpose until EPA grants written permission in accordance with the terms of the consent decree; (2) take all necessary actions to ensure that third parties do not interfere with the operation of any public water system that EPA may authorize the Muros to operate at the Muros' trailer park pursuant to the consent decree; (3) take all necessary actions to ensure that third parties do not violate, or cause the Muros to violate, any of the terms of the consent decree; (4) if EPA authorizes the Muros to operate any public water system at the Muro's trailer park in accordance with the terms of the consent decree, the Muros shall thereafter comply with all applicable requirements of the SDWA, its implementing regulations, and certain other requirements set forth in the consent decree; (5) pay a stipulated civil penalty of $500.00 for past violations of the Emergency Administrative Order; and (6) pay stipulated civil penalties for each future violation of any requirement or deadline of the consent decree.

The Department of Justice will receive comments relating to the consent decree for a period of thirty (30) days from the date of this publication. Comments should be addressed to the Assistant Attorney General, Environment and Natural Resources Division, P.O. Box 7611, U.S. Department of Justice, Washington, DC 20044–7611, and should refer to *United States* v. *Arturo C. Muro and Manuela B. Muro,* Case No. 00cv1484– B(POR), DOJ Ref. No. 90–5–1–1–07113. A copy of all comments also should be sent to Peter J. Sholl, Assistant U.S. Attorney, Office of the U.S. Attorney, 880 Front Street, Room 6293, San Diego, California 92101.

The consent decree may be examined at the Office of the United States Attorney, 880 Front Street, Room 6293, San Diego, California 92101, and at the United States Environmental Protection Agency, Region IX, 75 Hawthorne Street, San Francisco, California 94105. A copy of the consent decree may also be obtained by mail from the Consent Decree Library, P.O. Box 7611, U.S. Department of Justice, Washington, DC 20044–7611, or by faxing a request to Tonia Fleetwood at facsimile number (202) 514–0097, telephone confirmation number (202) 514–1547. In requesting a copy, please refer to *United States* v. *Arturo C. Muro and Manuela B. Muro,* Case No. 00cv1484–B(POR), DOJ Ref. No. 90–5–1–1–07113, and enclose a check in the amount of $8.25 (25 cents per page reproduction cost) payable to the U.S. Treasury.

Ellen M. Mahan,

Assistant Section Chief, Environmental Enforcement Section.

[FR Doc. 02–5672 Filed 3–8–02; 8:45 am]

BILLING CODE 4410–15–M

DEPARTMENT OF JUSTICE

Notice of Lodging of Consent Decree Pursuant to the Comprehensive Environmental Response, Compensation, and Liability Act

In accordance with Departmental policy, 28 CFR 50.7, notice is hereby given that three proposed consent decrees in *United States* v. *Quemetco, Inc., et al.,* Civil Action No. CV–02–225–C, were lodged on January 31, 2002, with the United States District Court for the Western District of Washington. The consent decrees require the defendants Quemetco, Inc., BFI Waste Systems of North America, Inc., and the University of Washington, to compensate the trustees for natural resource damages at the Tualip Landfill Superfund Site, which consist of the State of Washington Department of Ecology, the Tulalip Tribes of Washington, the National Oceanic and Atmospheric Administration of the

United States Department of Commerce, and the United States Department of Interior, for natural resource damages at the Tualip Landfill Superfund Site that have resulted from the release of hazardous substances at the Site. Under the consent decrees Quemetco will pay $39, 839 for natural resource damages, BFI Waste Systems of North America will pay $37, 981, and the University of Washington will pay $39, 139.

The Department of Justice will receive, for a period of thirty (30) days from the date of this publication, comments relating to the proposed consent decrees. Comments should be addressed to the Assistant Attorney General for the Environment and Natural Resources Division, Department of Justice, Washington, DC 20530, and should refer to *United States* v. *Quemetco, Inc., et al.,* DOJ Ref. #90–11–3–1412/9.

The proposed consent decrees may be examined at the office of the United States Attorney, 101 Fifth Avenue, Seattle WA 98104. A copy of the proposed consent decrees may also be obtained by mail from the Consent Decree Library, PO Box 7611, U.S. Department of Justice, Washington, DC 20044–7611 or by faxing a request to Tonia Fleetwood, fax no. (202) 514–0097, phone confirmation number (202) 514–1547. In requesting a copy, please enclose a check in the amount of $5.00 (25 cents per page reproduction cost) payable to the U.S. Treasury.

Robert E. Maher, Jr.,

Assistant Chief, Environmental Enforcement Section, Environment and Natural Resources Division.

[FR Doc. 02–5754 Filed 3–8–02; 8:45 am]

BILLING CODE 4410–01–M

DEPARTMENT OF JUSTICE

Notice of Lodging of Consent Decree Pursuant to the Oil Pollution Act of 1990

In accordance with Departmental policy, notice is hereby given that a proposed Consent Decree in *United States* v. *Texas Petrochemicals Corporation,* Civil Action H–00–3555, was lodged on December 11, 2001, with the United States District Court for the Southern District of Texas.

In this action the United States sued Texas Petrochemicals Corporation pursuant to section 113 of the Clean Air Act (''CAA''), 42 U.S.C. 7413, for TPC's violations of the Standards of Performance for New Stationary Sources (''NSPS''), 40 CFR part 60, subparts A and Db, the National Emission Standards for Hazardous Air Pollutants (''NESHAP''), 40 CFR part 63, subparts G and H; the National Emissions Standards for Hazardous Air Pollutants for Source Categories, 40 CFR part 61, subpart M, relating to asbestos (''asbestos NESHAP''), and for violations of the Texas Air Quality Control Regulations, 30 TAC §§ 115.10–149, at its chemical manufacturing facility in Houston, Texas. The Consent Decree provides for TPC's payment of a civil penalty to the United States in the amount of $113,750 dollars, and requires TPC to bring its facility into compliance with the Texas Air Quality Control Regulations, by installing control equipment consisting of internal floating roofs on Tanks 77, 78 and 79.

The Department of Justice will receive, for a period of thirty (30) days from the date of this publication, comments relating to the proposed Consent Decree. Comments should be addressed to Thomas L. Sansonetti, Assistant Attorney General for the Environment and Natural Resources Division, PO Box 7611, United States Department of Justice, Washington, DC 20044–7611, and should refer to *United States* v. *Texas Petrochemical Corporation,* DOJ Ref. #90–5–2–1–06816.

The proposed Consent Decree may be examined at the office of the United States Attorney, Southern District of Texas, 911 Travis Street, Suite 1500, Houston, Texas 77208; and the Region VI Office of the Environmental Protection Agency, 1445 Ross Avenue, Dallas, Texas. A copy of the Consent Decree may also be obtained by mail from the Consent Decree Library, PO Box 7611, United States Department of Justice, Washington, DC 20044–7611. In requesting a copy please refer to the referenced case and enclose a check in the amount of $4.00 (25 cents per page reproduction costs), payable to the Consent Decree Library.

Catherine R. McCabe,

Deputy Chief, Environmental Enforcement Section, Environment and Natural Resources Division.

[FR Doc. 02–5756 Filed 3–8–02; 8:45 am]

BILLING CODE 4410–15–M

DEPARTMENT OF JUSTICE

Notice of Lodging of Consent Decree Under the Resource Conservation and Recovery Act, Toxic Substances Control Act, and Clean Water Act

Under 28 CFR 50.7, notice is hereby given that on February 1, 2002, a proposed Consent Decree in *United States* v. *Transcontinental Gas Pipe Line Corp.,* Civil Action No. H–02–0387 was lodged with the United States District Court for the Southern District of Texas.

In this action the United States sought injunctive relief and civil penalties related to the natural gas pipeline owned and operated by Transcontinental Gas Pipe Line Corp. (Transco) which stretches from Texas to New York. In the Complaint, the United States seeks injunctive relief and civil penalties pursuant to Resource Conservation and Recovery Act (RCRA) Section 3008(a), (g), and (h), 42 U.S.C. 6928(a), (g), and (h); Clean Water Act (CWA) section 301(a), 33 U.S.C. 1311(a); and Toxic Substances Control Act (TSCA) sections 6 and 17, 15 U.S.C. 2605 and 2616. The United States resolves these claims in the proposed Consent Decree which also requires Transco to perform corrective action consisting of soil and groundwater cleanup of hazardous wastes along its pipeline; perform PCB cleanup work; complete a stormwater discharge monitoring program; and pay a civil penalty of $1.4 million.

The Department of Justice will receive comments relating to the Consent Decree for a period of thirty (30) days from the date of this publication. Comments should be addressed to the Assistant Attorney General, Environment and Natural Resources Division, PO Box 7611, U.S. Department of Justice, Washington, DC 20044–7611, and should refer to *United States* v. *Transcontinental Gas Pipe Line Corp.*, No. H–02–0387 (S.D. Tex.), D.J. Ref. 90–7–1–909.

The Consent Decree may be examined at the Office of the United States Attorney for the Southern District of Texas, 910 Travis, Suite 1500, Houston, TX 77002, and at the Enforcement and Compliance Docket Information Center, U.S. Environmental Protection Agency, Rm. 4033, Ariel Rios Bldg., 1200 Pennsylvania Avenue, NW., Washington, DC 20004. A copy of the Consent Decree may also be obtained by mail from the Consent Decree Library, PO Box 7611, U.S. Department of Justice, Washington, DC 20044–7611 or by faxing a request to Tonia Fleetwood, fax no. (202) 514–0097, phone confirmation number (202) 514–1547. When requesting a full copy with all exhibits, please enclose a check in the amount of $85.25 (25 cents per page reproduction cost) payable to the U.S. Treasury. When requesting a copy without exhibits, please enclose a check in the amount of $16.25 (25 cents per

page reproduction cost) payable to the U.S. Treasury.

Thomas Mariani,

Assistant Chief, Environmental Enforcement Section, Environment and Natural Resources Division.

[FR Doc. 02–5753 Filed 3–8–02; 8:45 am]

BILLING CODE 4410–15–M

DEPARTMENT OF JUSTICE

Notice of Lodging of Consent Decree Under the Clean Air Act

Notice is hereby given that on February 1, 2002, a proposed Consent Decree (''Decree'') in *United States* v. *Williams Field Services Company and Williams Gas Processing Company, Inc.,* Civil Action No. 02–B–0199, was lodged with the United States District Court for the District of Colorado. The action was filed pursuant section 113(b) of the Clean Air Act (the ''Act''), 42 U.S.C. 7413(b). The action concerns modifications of the so-called Ignacio Plant, a natural gas processing plant located on privately owned fee land situated within the exterior boundaries of the Southern Ute Indian Reservation near Durango, Colorado, consisting of the installation of two dehydrators allegedly in violation of the Act's Prevention of Significant Deterioration (''PSD'') program. Pursuant to the terms of the settlement the Companies are required to pay a civil penalty of $951,139 and obtain a PSD permit from EPA for those sources.

The Department of Justice will receive comments relating to the proposed Consent Decree for a period of thirty (30) days from the date of this publication. Comments should be addressed to the Assistant Attorney General, Environment and Natural Resources Division, Department of Justice, and sent to the Denver Field Office, 999 18th Street, Suite 945NT, Denver, CO 80202, and should refer to *United States* v. *Williams Field Services Company et al.,* D.J. Ref. 90–5–2–1–06938/1.

The Decree may be examined at the offices of the EPA Library, EPA Region VIII, located at 999 18th Street, First Floor, Denver, Colorado 80202. A copy of the Decree may also be obtained by mail from the Consent Decree Library, PO Box 7611, U.S. Department of Justice, Washington, DC 20044–7611 or by faxing a request to Tonia Fleetwood, fax no. (202) 514–0097, phone confirmation number (202) 514–1547. In requesting a copy, please enclose a check in the amount of $6.25 (25 cents per page reproduction cost) payable to the U.S. Treasury.

Robert Brook,

Assistant Section Chief, Environmental Enforcement Section, Environment and Natural Resources Division.

[FR Doc. 02–5755 Filed 3–8–02; 8:45 am]

BILLING CODE 4410–15–M

DEPARTMENT OF JUSTICE

Antitrust Division

Notice Pursuant to The National Cooperative Research and Production Act of 1993—New Productivity Initiative, Inc.

Notice is hereby given that, on January 16, 2002, pursuant to section 6(a) of the National Cooperative Research and Production Act of 1993, 15 U.S.C. 4301 *et seq.* (''the Act''), New Productivity Initiative, Inc. has filed written notifications simultaneously with the Attorney General and the Federal Trade Commission disclosing changes in its membership status. The notifications were filed for the purpose of extending the Act's provisions limiting the recovery of antitrust plaintiffs to actual damages under specified circumstances. Specifically, Cadance Design Systems, Chelmsford, MA; and Compaq Computer Corporation, Houston, TX have been added as parties to this venture.

No other changes have been made in either the membership or planned activity of the group research project. Membership in this group research project remains open, and New Productivity Initiative, Inc. intends to file additional written notification disclosing all changes in membership.

On October 4, 2001, New Productivity Initiative, Inc. filed its original notification pursuant to section 6(a) of the Act.

The Department of Justice published a notice in the **Federal Register** pursuant to section 6(b) of the Act on December 5, 2001 (66 FR 63259).

Constance K. Robinson,

Director of Operations, Antitrust Division.

[FR Doc. 02–5757 Filed 3–8–02; 8:45 am]

BILLING CODE 4410–11–M

DEPARTMENT OF LABOR

Employment and Training Administration

Investigations Regarding Certifications of Eligibility To Apply for NAFTA Transitional Adjustment Assistance

Petitions for transitional adjustment assistance under the North American Free Trade Agreement-Transitional Adjustment Assistance Implementation Act (Pub. L. 103–182), hereinafter called (NAFTA–TAA), have been filed with State Governors under Section 250(b)(1) of Subchapter D, Chapter 2, Title II, of the Trade Act of 1974, as amended, are identified in the Appendix to this Notice. Open notice from a Governor that a NAFTA–TAA petition has been received, the Director of the Division of Trade Adjustment Assistance (DTAA), Employment and Training Administration (ETA), Department of Labor (DOL), announces the filing of the petition and takes action pursuant to paragraphs (c) and (e) of section 250 of the Trade Act.

The purpose of the Governor's actions and the Labor Department's investigations are to determine whether the workers separated from employment on or after December 8, 1993 (date of enactment of Pub. L. 103–182) are eligible to apply for NAFTA–TAA under Subchapter D of the Trade Act because of increased imports from or the shift in production to Mexico or Canada.

The petitioners or any other persons showing a substantial interest in the subject matter of the investigations may request a public hearing with the Director of DTAA at the U.S. Department of Labor (DOL) in Washington, DC provided such request if filed in writing with the Director of DTAA not later than March 21, 2002.

Also, interested persons are invited to submit written comments regarding the subject matter of the petitions to the Director of DTAA at the address shown below not later than March 21, 2002.

Petitions filed with the Governors are available for inspection at the Office of the Director, DTAA, ETA, DOL, Room C–5311, 200 Constitution Avenue, NW., Washington, DC 20210.

Signed at Washington, DC this 28th day of February 2002.

Edward A. Tomchick,

Director, Division of Trade Adjustment Assistance.

APPENDIX

Subject firm	Location	Date received at Governor's office	Petition number	Articles produced
Corning Cable (Wkrs)	Hickory, NC	01/02/2002	NAFTA–5,735	fiber optic cable.
Solon Manufacturing (Co.)	Skowhegan, ME	01/16/2002	NAFTA–5,736	ice cream sticks.
Harsco Corp.—Heckett Multiserv (Wkrs)	Whiting, IN	01/15/2002	NAFTA–5,737	steel.
Drexel Heritage Furnshings (Co.)	Drexel, NC	01/22/2002	NAFTA–5,738	residential furniture.
Shield Acquisition—Coldwell Moser (Co.)	New Albany, IN	01/22/2002	NAFTA–5,739	saddle skirting.
Rem Electronics Supply (Co.)	El Paso, TX	01/22/2002	NAFTA–5,740	distributed electronics parts.
Western Power Products (Co.)	Hood River, OR	01/14/2002	NAFTA–5,741	fiberglass enclosures.
Cannon County Knitting Mills (Wkrs)	Smithville, TN	01/22/2002	NAFTA–5,742	knit wearing apparel.
Zeeland Chemical—Cambrex Corp. (Wkrs).	Zeeland, MI	01/22/2002	NAFTA–5,743	chemicals.
Haworth (Wkrs)	Haworth, MI	01/22/2002	NAFTA–5,744	chairs.
Gold Toe Brands (Co.)	Bally, PA	01/18/2002	NAFTA–5,745	men and women's socks.
Loranger Manufacturing (Co.)	Warren, PA	01/18/2002	NAFTA–5,746	apparel.
Park Hannifin (Wkrs)	Reading, PA	01/28/2002	NAFTA–5,747	repair multi spindle screw machines.
J and E International Sales (Co.)	El Paso, TX	01/18/2002	NAFTA–5,748	sales/distribution of copper tubing.
Goodyear Dunlop Tires N.A. (USWA)	Huntsville, AL	01/18/2002	NAFTA–5,749	radial passenger and light truck tires.
Telex Communications (Wkrs)	Buchanan, MI	01/28/2002	NAFTA–5,750	audio service.
Goodyear Tire and Rubber (USWA)	East Gadsden, AL	01/15/2002	NAFTA–5,751	radial passenger tires and hummer.
Cascade General (Co.)	Portland, OR	01/07/2002	NAFTA–5,752	pump shafts.
Salem Oil and Grease (Co.)	Salem, MA	01/16/2002	NAFTA–5,753	leather softness, waxes and greases.
Polariod Corporation (Wkrs)	Camb, MA	01/17/2002	NAFTA–5,754	film and equipment.
Delphi Automotive System (Wkrs)	Oak Creek, WI	01/16/2002	NAFTA–5,755	auto body computers phones and service.
AT and T (Co.)	Los Angeles, CA	01/07/2002	NAFTA–5,756	phones and service.
Wateree Textile (Co.)	Lugoff, SC	01/17/2002	NAFTA–5,757	taffata lining fabrics.
Bosch Rexroth Croporation (IAMAW)	Sturtevant, WI	01/16/2002	NAFTA–5,758	hydraulic pumps, vales, manifolds.
Hoffman Enclosures—Pentair (Wkrs)	Anoka, MN	01/16/2002	NAFTA–5,759	enclosures.
Donaldson Company (Co.)	Nicholasville, KY	01/25/2002	NAFTA–5,760	panels, hoppers, fan assemblies.
Clear Pine Mouldings (Wkrs)	Prineville, OR	01/22/2002	NAFTA–5,761	doors and windows for residentual.
JTD, Inc. (Wkrs)	Tigard, OR	01/25/2002	NAFTA–5,762	aluminum tooling (castings).
Leavitt Communications (Wkrs)	Lincolnshire, IL	02/20/2002	NAFTA–5,763	wireless products.
J. Dashew, Inc. (Wkrs)	Baltimore, MD	11/14/2002	NAFTA–5,764	industrial sewing machine and supplies.
Prudential Steel—Maverick Tube (Wkrs)	Langview, WA	01/25/2002	NAFTA–5,765	steel.
Badger States Tanning (Wkrs)	Milwaukee, WI	01/28/2002	NAFTA–5,766	suede leather splits.
Huhtamaki Foodservices, Chinet Co. (The) (PACE).	Waterville, ME	01/23/2002	NAFTA–5,767	laminated pulp molded plates.
Ultrafem, Inc. (Co.)	Missoula, MT	01/17/2002	NAFTA–5,768	sanitary protection products.
Materials Processing (Co.)	Riverview, MI	01/22/2002	NAFTA–5,769	coated axle.
Kolenda Tool and Die (Co.)	Wyoming, MI	01/23/2002	NAFTA–5,770	injection molds and plastic molded parts.
Dillon Yarn (Wkrs)	Dillon, SC	01/23/2002	NAFTA–5,771	yarn.
Asarco, Inc.—Amarillo Copper Refinery (USWA).	Amarillo, TX	01/23/2002	NAFTA–5,772	copper.
Superior Milling (Wkrs)	Watersmeet, MI	01/23/2002	NAFTA–5,773	green lumber.
Xpectra, Inc. (Wkrs)	Santa Cruz, CA	01/18/2002	NAFTA–5,774	plastic injection moldings.
Printing Arts America (Wkrs)	Brisbane, CA	01/22/2002	NAFTA–5,775	printed materials.
Blauer Manufacturing—CAM Corp. (Co.)	Chatom, AL	01/23/2002	NAFTA–5,776	police outerwear.
R.R. Donnelley (Wkrs)	Lynchburg, VA	01/22/2002	NAFTA–5,777	catalogs.
Tyco Electronics (Wkrs)	Georgetown, KY	01/23/2002	NAFTA–5,778	wiring harnesses and cable.
Brunswick Foreign Trade Zone (Wkrs)	Brunswick, GA	01/23/2002	NAFTA–5,779	paper products.
AG Simpson Automotive Systems (UAW)	Sterling Heights, MI	01/24/2002	NAFTA–5,780	automotive bumper assemblies.
Pak-Mor Manufacturing (Wkrs)	San Antonio, TX	01/28/2002	NAFTA–5,781	front loader body shell.
Allegro Microsystems (Wkrs)	Willow Grove, PA	01/28/2002	NAFTA–5,782	integrated circuits.
Maska U.S. (Co.)	Williston, VT	01/28/2002	NAFTA–5,783	hockey apparel.
Ferraz Shawmut (Co.)	Newburyport, MA	01/24/2002	NAFTA–5,784	electrical fuses.
Symbol Technologies (Wkrs)	Houston, TX	01/23/2002	NAFTA–5,785	bar code scanners.
Flextronics Enclosures (Co.)	Kingston, PA	01/25/2002	NAFTA–5,786	enclosures (cabinets).
Flextronics Enclosures (Wkrs)	Smithfield, NC	01/29/2002	NAFTA–5,787	motorola cabinets.
United Central Industrial—Blue Ridge (Co.).	Bassett, VA	01/25/2002	NAFTA–5,788	industrial supplies and tools.
Genelity Corp. (Wkrs)	Jessup, PA	01/29/2002	NAFTA–5,789	artificial christmas trees.
Owens Illinois (Wkrs)	Newburyport, MA	01/14/2002	NAFTA–5,790	plastic containers.
L and G Manufacturing (UNITE)	Archbald, PA	01/29/2002	NAFTA–5,791	men's suit and dress pants.
TNS Mills (Co.)	Rockingham, NC	01/29/2002	NAFTA–5,792	textile yarn.
Ferro Corporation (Wkrs	Pittsburgh, PA	01/29/2002	NAFTA–5,793	glass enamels, ceramic coatings.
Emerson Electric—Daniel Measurement (Co.).	Statesboro, GA	02/04/2002	NAFTA–5,794	turbine and valve product lines.
Lakemont Mfg. (Co.)	Lakemont, GA	01/30/3002	NAFTA–5,795	ladies pants.
John Solomon (Co.)	Somerville, MA	01/31/2002	NAFTA–5,796	textiles, pockets etc.
Engelhand Corporation (Wkrs)	McLntyre, GA	01/30/2002	NAFTA–5,797	mined kaolin.

APPENDIX—Continued

Subject firm	Location	Date received at Governor's office	Petition number	Articles produced
Oxford Slacks (Co.)	Monroe, GA	01/30/2002	NAFTA–5,798	men's slacks.
Aalfs Manufacturing (Co.)	Texarkana, AR	02/04/2002	NAFTA–5,799	denim bottoms, jeans, shorts.
FDB, Inc. (Co.)	Lincolnton, GA	02/04/2002	NAFTA–5,800	men's and ladies jackets.
Associated Spring—Barnes Group (Co.)	Dallas, TX	02/04/2002	NAFTA–5,801	power brake and return springs.
Justin Brands (Co.)	Ft. Worth, TX	02/04/2002	NAFTA–5,802	boots.
Optek Technology (Wkrs)	Carrollton, TX	01/30/2002	NAFTA–5,803	automotive plastic parts.
R.G. Barry (Co.)	Laredo, TX	01/30/2002	NAFTA–5,804	slipper components.
GeoComm Corporation (Co.)	El Paso, TX	01/30/2002	NAFTA–5,805	digital telecommunication services.
Accuride (Wkrs)	Columbia, TN	01/25/2002	NAFTA–5,806	light truck wheel.
Angelica Corporation (Wkrs)	Savannah, TN	01/30/2002	NAFTA–5,807	health care garments.
Forth, Inc.—Altex, Inc. (Co.)	Charlotte, NC	02/04/2002	NAFTA–5,808	knitted cotton.
Haworth, Inc.—Myrtle Mueller (Co.)	Chadbourn, NC	01/30/2002	NAFTA–5,809	file cabinet, tables.
Sanmina, Inc. (Wkrs)	Clinton, NC	01/28/2002	NAFTA–5,810	metal.
Thomson Multimedia (Wkrs)	Indianapolis, IN	02/05/2002	NAFTA–5,811	test equipment.
3M Bedford Park (Co.)	Bedford Park, IL	02/05/2002	NAFTA–5,812	paper, film and foil pressure.
CHF Industries (Wkrs)	Loris, SC	02/05/2002	NAFTA–5,813	bedding.
Tyco International (Co.)	Arab, AL	02/04/2002	NAFTA–5,814	motor controls.
Angelica Corporation (Wkrs)	Collinwood, TN	02/04/2002	NAFTA–5,815	hospital apparel.
Mitel Network—Network Access Solutions (Wkrs).	Ogdensburg, NY	02/01/2002	NAFTA–5,816	printed circuit board.
parker Hannifin (Co.)	Sanasota, FL	02/01/2002	NAFTA–5,817	valves.
S–B Power Tool (Co.)	Walnut Ridge, AR	02/04/2002	NAFTA–5,818	sanders, grinders, hammers.
Seagate US LLC (Wkrs)	Oklahoma City, OK	02/01/2002	NAFTA–5,819	hard disc drives.
Albany International (Co.)	Greenville, SC	01/31/2002	NAFTA–5,820	paper machines.
BH Electronics (Wkrs)	Marshall, MN	01/31/2002	NAFTA–5,821	transformer.
Sims Manufacturing (Co.)	Rutland, MA	01/30/2002	NAFTA–5,822	tractor cabs.
LeeMah Electronics (Wkrs)	San Francisco, CA	01/31/2002	NAFTA–5,823	circuit boards.
Uniroyal Goodrich Tire (USWA)	Tuscaloose, AL	01/30/2002	NAFTA–5,824	radial passenger tires.
Vaapco Group—Novatch Mfg. (Co.)	Millers Tavern, VA	01/23/2002	NAFTA–5,825	brake pads.
Fruit of the Loom (Wkrs)	Jamestown, KY	01/30/2002	NAFTA–5,826	men's and women's underware.
Carey Industries (Co.)	Danbury, CT	01/29/2002	NAFTA–5,827	textile dye.
T and K Manufacturing (Co.)	Brownstown, PA	01/31/2002	NAFTA–5,828	women's undergarments.
Chambersburg Engineering (Co.)	Chambersburg, PA	02/04/2002	NAFTA–5,829	heavy equipment.
D and M Tool (Co.)	Meadville, PA	02/04/2002	NAFTA–5,830	jigs, dies, fixtures, molds.
Champion Part (Wkrs)	Beech Creek, PA	02/04/2002	NAFTA–5,831	carburators axles.
Pittsburgh Annealing Box (USWA)	Pittsburgh, PA	02/04/2002	NAFTA–5,832	annealing inner covers.
Tyco Electronics (Wkrs)	Carlisle, PA	02/04/2002	NAFTA–5,833	electronic terminals.
Emerson Process Brooks Instrument (Wkrs).	Hatfield, PA	02/04/2002	NAFTA–5,834	sensor winding.
Pabst Brewing (Wkrs)	Fogelsville, PA	02/01/2002	NAFTA–5,835	beer and malt beverages.
Tyco Electronics (Wkrs)	Jacobus, PA	02/05/2002	NAFTA–5,836	electrical connectors.
Canto Tool (Co.)	Meadville, PA	02/05/2002	NAFTA–5,837	tooling.
Philadelphia Mixers (Co.)	Palmyra, PA	02/01/2002	NAFTA–5,838	gearing, shafts, etc.
Square D (Co.)	Oshkosh, WI	02/11/2002	NAFTA–5,839	low voltage transformers & medical panel.
McCoy Ellison (Co.)	Monroe, NC	02/11/2002	NAFTA–5,840	textile equipment.
Biltwell Clothing (UNITE)	Farmington, MO	01/30/2002	NAFTA–5,841	garments.
Schumacher Electric (Co.)	Hoopeston, IL	02/05/2002	NAFTA–5,842	automotive battery chargers.
Dale Electronics (Wkrs)	Norfolk, NE	02/04/2002	NAFTA–5,843	e-rel, mil-chip.
Argus International (Wkrs)	Medley, FL	02/06/2002	NAFTA–5,844	pants, shirts and women's suits.
Hale Products (Co.)	St. Joseph, TN	02/06/2002	NAFTA–5,845	portable fire pumps.
Evy of California (Wkrs)	Bakersfield, CA	01/28/2002	NAFTA–5,846	apparel.
Bowater (PACE)	Coosa Pines, AL	02/07/2002	NAFTA–5,847	pulp and paper.
Tee Tease LLC (Azteca)(Wkrs)	Commerce, CA	11/07/2001	NAFTA–5,848	print tee shirts.
Levolor Kirsch Window Fashions (Co.)	Westminster, CA	02/06/2002	NAFTA–5,849	wood and faux wood.
RHI Refractories America—AP Green Ind. (Co.).	Middletown, PA	02/08/2002	NAFTA–5,850	precast refractory shapes.
California Joy (Co.)	Glendale, CA	02/06/2002	NAFTA–5,851	swimwear.
Southwire Company (Co.)	Carrollton, GA	02/07/2002	NAFTA–5,852	fuel tanks.
Tri Way Mfg. (Wkrs)	El Paso, TX	02/07/2002	NAFTA–5,853	injection molds.
Smiths Group—Portex, Inc. (Co.)	Fort Myers, FL	02/08/2002	NAFTA–5,854	Anesthesia Circuits.
Low Complexity Mfg. Group (Co.)	Utica, NY	10/25/2002	NAFTA–5,855	fusel assemblies.
Black and Decker (Co.)	Nashville, TN	02/07/2002	NAFTA–5,856	reconditioning of tools.
Tyco Printed Circuit Group (Wkrs)	Dallas, OR	02/04/2002	NAFTA–5,857	printed circuit boards.
West Point Foundry and Machine (Co.)	West Point, GA	02/15/2002	NAFTA–5,858	sale, service of textile machinery.
Schott Corporation (Co.)	Jefferson, MN	02/15/2002	NAFTA–5,859	wire.
Arlee Home Fashions (Wkrs)	Leachville, AR	02/19/2002	NAFTA–5,860	chairpads and pillows.
L.E. Mason Co.—Thomas and Betts (Co.)	Boston, MA	02/11/2002	NAFTA–5,861	zinc.
Schrader Machine and Tool—SMT Auto (Wkrs).	Hanover, MI	01/08/2002	NAFTA–5,862	auto parts.

APPENDIX—Continued

Subject firm	Location	Date received at Governor's office	Petition number	Articles produced
Thomas and Betts (Co.)	Quakertown, PA	02/15/2002	NAFTA–5,863	application tools.
Westwood LLC (Wkrs)	Marion, NC	02/12/2002	NAFTA–5,864	cloth.
National Steel Pellet (USWA)	Keewtin, MN	02/14/2002	NAFTA–5,865	steel pellet.
Exide Technologies (Co.)	Florence, MS	02/14/2002	NAFTA–5,866	batteries.
Tracy Minntronix (Wkrs)	Tracy, MN	01/31/2002	NAFTA–5,867	transformers.
Alcoa Wheel Products—Reynolds Wheel (Co.).	Lebanon, VA	02/13/2002	NAFTA–5,868	hot forging, re-machining.
Cherry Automotive (Wkrs)	Waukegan, IL	02/22/2002	NAFTA–5,869	electronic components.

[FR Doc. 02–5570 Filed 3–8–02; 8:45 am]

BILLING CODE 4510–30–M

NATIONAL AERONAUTICS AND SPACE ADMINISTRATION

[Notice 02–034]

NASA Advisory Council, Planetary Protection Advisory Committee; Meeting

AGENCY: National Aeronautics and Space Administration.

ACTION: Notice of meeting.

SUMMARY: In accordance with the Federal Advisory Committee Act, Public Law 92–463, as amended, the National Aeronautics and Space Administration announces a forthcoming meeting of the NASA Advisory Council (NAC), Planetary Protection Advisory Committee (PPAC).

DATES: Monday, March 18, 2002, 1 p.m. to 5 p.m., Tuesday, March 19, 2002, 8:30 a.m. to 5 p.m.

ADDRESSES: NASA Headquarters, Conference Room 7H46, 300 E Street, SW., Washington, DC 20546.

FOR FURTHER INFORMATION CONTACT: Ms. Marian Norris, Code SB, National Aeronautics and Space Administration, Washington, DC 20546, 202/358–4452.

SUPPLEMENTARY INFORMATION: The meeting will be open to the public up to the capacity of the room. The agenda for the meeting includes the following:

—NASA Planetary Protection Policy
—NASA's Mars and Solar System Exploration Program
—Planetary Protection Advisory Committee's Role and Responsibilities
—Issues in Returned Sample Handling
—MUSES–C Mission
—Mars Planetary Protection: Issues and Status
—Emerging Issues in Planetary Protection
—Europa and the Outer Planets
—Human Exploration

It is imperative that the meeting be held on these dates to accommodate the scheduling priorities of the key participants. Visitors will be requested to sign a visitor's register.

Sylvia K. Kraemer,

Advisory Committee Management Officer, National Aeronautics and Space Administration.

[FR Doc. 02–5715 Filed 3–8–02; 8:45 am]

BILLING CODE 7510–01–P

NATIONAL AERONAUTICS AND SPACE ADMINISTRATION

[Notice 02–035]

NASA Advisory Council, Space Science Advisory Committee, Sun-Earth Connection Advisory Subcommittee; Meeting

AGENCY: National Aeronautics and Space Administration (NASA).

ACTION: Notice of meeting.

SUMMARY: In accordance with the Federal Advisory Committee Act, Public Law 92–463, as amended, the National Aeronautics and Space Administration announces a forthcoming meeting of the NASA Advisory Council, Space Science Advisory Committee, Sun-Earth Connection Advisory Subcommittee.

DATES: Monday, April 1, 2002, 8:30 a.m. to 5 p.m.; Tuesday, April 2, 2002, 8:30 to 5 p.m.; and Wednesday, April 3, 8:30 a.m. to noon.

ADDRESSES: NASA Headquarters, Conference Room 5H46, 300 E Street, SW., Washington, DC 20546.

FOR FURTHER INFORMATION CONTACT: Ms. Marian Norris, Code SB, National Aeronautics and Space Administration, Washington, DC 20546, 202/358–4452.

SUPPLEMENTARY INFORMATION: The meeting will be open to the public up to the capacity of the room. The agenda for the meeting includes the following topics:

—Sun-Earth Connection Program Overview: Budget, Ongoing Program, Future Activities
—Solar Terrestrial Probes Update
—Living With a Star Update
—Sun-Earth Connection Roadmap and Strategic Planning
—Discussion and Writing Groups

It is imperative that the meeting be held on these dates to accommodate the scheduling priorities of the key participants. Visitors will be requested to sign a visitor's register.

Sylvia K. Kraemer,

Advisory Committee Management Officer, National Aeronautics and Space Administration.

[FR Doc. 02–5716 Filed 3–8–02; 8:45 am]

BILLING CODE 7510–01–P

NATIONAL AERONAUTICS AND SPACE ADMINISTRATION

[Notice (02–032)]

Notice of Prospective Patent License

AGENCY: National Aeronautics and Space Administration.

ACTION: Notice of prospective patent license.

SUMMARY: NASA hereby gives notice that the Enduro Medical Technology, Inc. of Manchester, Connecticut, has applied for a partially exclusive license to practice the inventions described and claimed in: U.S. Patent No. 5,174,590, entitled ''Compliant Walker,'' and U.S. Patent No. 4,946,421, entitled ''Robot Cable-Compliant Joint,'' both patents being assigned to the United States of America as represented by the Administrator of the National Aeronautics and Space Administration. Written objections to the proposed grant of a license should be sent to NASA Goddard Space Flight Center. NASA has not yet made a determination to grant the requested license and may deny the requested license even if no objections are submitted within the comment period.

DATES: Responses to this notice must be received by March 26, 2002.

FOR FURTHER INFORMATION CONTACT: Diana Cox, Lead Patent Counsel, NASA Goddard Space Flight Center, Code 710.1, Greenbelt, Maryland, 20771.

Dated: March 4, 2002.

Paul G. Pastorek,

General Counsel.

[FR Doc. 02–5713 Filed 3–8–02; 8:45 am]

BILLING CODE 7510–01–P

NATIONAL AERONAUTICS AND SPACE ADMINISTRATION

[Notice 02–033]

Notice of Prospective Patent License

AGENCY: National Aeronautics and Space Administration.

ACTION: Notice of prospective patent license.

SUMMARY: NASA hereby gives notice that Instrumentation Technology Associates, Inc., having offices in Exton, Pennsylvania, has applied for a partially exclusive license to practice the inventions described and claimed in U.S. Patent No. 5,827,531, entitled ''Multi-Lamellar, Immiscible Phase Microencapsulation of Drugs''; U.S. Patent No. 6,099,864, entitled ''INSITU Activation of Microcapsules''; U.S. Patent No. 6,214,300, entitled ''Microencapsulation and Electrostatic Processing Device (MEPS)''; U.S. Patent No. 6,103,271, entitled ''Microencapsulation & Electrostatic Coating Process''; pending U.S. patent application entitled ''Protein Crystal Encapsulation Process,'' NASA Case No. MSC–22936–1–SB; pending U.S. patent application entitled ''Externally Triggered Microcapsules,'' NASA Case No. MSC22939–1–SB and pending continuations, divisional applications, and foreign applications corresponding to the above-listed cases. Each of the above-listed patents and patent applications are assigned to the United States of America as represented by the Administrator of the National Aeronautics and Space Administration. Written objections to the prospective grant of a license should be sent to the Johnson Space Center.

DATES: Responses to this notice must be received by March 26, 2002.

FOR FURTHER INFORMATION CONTACT: James Cate, Patent Attorney, NASA Johnson Space Center, Mail Stop HA, Houston, TX 77058–8452; telephone (281) 483–1001.

Dated: March 4, 2002.

Paul G. Pastorek,

General Counsel.

[FR Doc. 02–5714 Filed 3–8–02; 8:45 am]

BILLING CODE 7510–01–P

NATIONAL FOUNDATION ON THE ARTS AND THE HUMANITIES

Meeting of the National Museum Services Board

AGENCY: Institute of Museum and Library Services.

ACTION: Notice of meeting.

SUMMARY: This notice sets forth the agenda of the forthcoming meeting of the National Museum Services Board. This notice also describes the function of the board. Notice of this meeting is required under the Sunshine in Government Act and regulations of the Institute of Museum and Library Services, 45 CFR 1180.84.

Time/Date: 1:30 p.m.–4:30 p.m. on Friday, March 22, 2002.

Status: Open.

Address: The Fells Point Room of the Renaissance Harborplace Hotel, 202 East Pratt Street, Baltimore, MD 21202, (410) 547–1200.

FOR FURTHER INFORMATION CONTACT: Elizabeth Lyons, Special Assistant to the Director, Institute of Museum and Library Services, 1100 Pennsylvania Avenue, NW., Room 510, Washington, DC 20506, (202) 606–4649.

SUPPLEMENTARY INFORMATION: The National Museum Services Board is established under the Museum Services Act, Title II of the Arts, Humanities, and Cultural Affairs Act of 1976, Public Law 94–462. The Board has responsibility for the general policies with respect to the powers, duties, and authorities vested in the Institute under the Museum Services Act.

The meeting on Friday, March 22, 2002 will be open to the public. If you need special accommodations due to a disability, please contact: Institute of Museum and Library Services, 1100 Pennsylvania Avenue, NW., Washington, DC 20506—(202) 606–8536—TDD (202) 606–8636 at least seven (7) days prior to the meeting date.

Agenda

83rd Meeting of the National Museum Services Board at The Renaissance Harborplace Hotel, 202 East Pratt Street, Baltimore, MD 21202, The Fells Point Room on Friday, March 22, 2002.

1:30 p.m.–4:30 p.m.

I. Chairman's Welcome
II. Approval of Minutes from the 82nd NMSB Meeting
III. Director's Report
IV. Staff Reports
(a) Office of Management and Budget
(b) Office of Public and Legislative Affairs
(c) Office of Technology and Research
(d) Office of Museum Services
(e) Office of Library Services
V. Special Report on Research Findings
VI. September 11, 2002
VII. Coming Up Taller program

Dated: March 7, 2002.

Teresa LaHaie,

Administrative Officer, National Foundation on the Arts and Humanities, Institute of Museum and Library Services.

[FR Doc. 02–5889 Filed 3–7–02; 2:16 pm]

BILLING CODE 7036–01–M

NATIONAL SCIENCE FOUNDATION

Business and Operations Advisory Committee; Meeting

In accordance with Federal Advisory Committee Act (Pub. L. 92–463, as amended), the National Science Foundation announces the following meeting:

Name: Business and Operations Advisory Committee (9556).

Date/Time: March 26, 2002; 8:30 a.m. to 5 p.m. (EST), March 27, 2002; 8:30 a.m. to 3 p.m. (EST).

Place: National Science Foundation, 4201 Wilson Boulevard, Room 1235, Arlington, VA.

Type of Meeting: Open.

Contact Person: Louise McIntire, National Science Foundation, 4201 Wilson Boulevard, Arlington, VA 22230 (703) 292–8200.

Purpose of Meeting: To provide advice concerning issues related to the oversight, integrity, development and enhancement of NSF's business operations.

Agenda:

March 26, 2002

AM: Introductions and Updates—Office of Budget, Finance, and Award Management and Office of Information and Resource Management activities; President's Management Agenda.

PM: Presentation and Discussion—Management Controls and Audit Findings.

March 27, 2002

AM: Discussion—Meet with NSF Deputy Director; presentation by NSF ''customer'' panel.

PM: Discussion—Planning for next meeting; feedback; other business.

Dated: March 5, 2002.

Susanne Bolton,

Committee Management Officer.

[FR Doc. 02–5707 Filed 3–8–02; 8:45 am]

BILLING CODE 7555–01–M

NATIONAL SCIENCE FOUNDATION

Enforcement of Title VI of the Civil Rights Act of 1964—National Origin Discrimination Against Persons With Limited English Proficiency; Policy Guidance

AGENCY: National Science Foundation.

ACTION: Notice.

SUMMARY: The National Science Foundation (NSF) is publishing policy guidance on Title VI's prohibition against national origin discrimination as it affects limited English proficient persons. This policy guidance does not create new obligations, but rather, clarifies existing Title VI responsibilities. The purpose of this document is to set forth general principles for the recipients of NSF financial assistance to apply when developing services to individuals with limited English proficiency as required by Title VI of the Civil Rights Act of 1964.

DATES: This guidance is effective immediately. Comments must be submitted on or before May 10, 2002. NSF will review all comments and will determine what modifications to the policy guidance, if any, are necessary.

ADDRESSES: Interested persons should submit written comments to Office of Equal Opportunity Programs, National Science Foundation, 4201 Wilson Blvd., Arlington, VA 22230. Comments may also be submitted by e-mail to: *rleichte@nsf.gov.*

FOR FURTHER INFORMATION CONTACT: Ana Ortiz or Ruth Leichter at the above address or by telephone at 703–292–8020; TDD: 703–292–9027. Arrangements to receive the policy in an alternative format may be made by contacting the named individuals.

Dated: February 19, 2002.

Ana A. Ortiz,

Director, Office of Equal Opportunity Programs, National Science Foundation.

SUPPLEMENTARY INFORMATION: Title VI of the Civil Rights Act of 1964, 42 U.S.C. 2000d, *et seq.* and its implementing regulations provide that no person shall be subjected to discrimination on the basis of race, color, or national origin under any program or activity that receives federal financial assistance. The purpose of this policy guidance is to clarify the responsibilities of recipients of federal financial assistance from the National Science Foundation (NSF), and assist them in fulfilling their responsibilities to limited English proficient (LEP) persons pursuant to Title VI of the Civil Rights Act of 1964 and implementing regulations. The policy guidance reiterates NSF's longstanding position that in order to avoid discrimination against LEP persons on the grounds of national origin, recipients must take reasonable steps to ensure that such persons have meaningful access to the programs, services, and information those recipients provide, free of charge.

I. Background

On August 11, 2000, the President issued Executive Order 13166, titled ''Improving Access to Services by Persons With Limited English Proficiency.'' 65 FR 50121 (August 16, 2000). On the same day, the Assistant Attorney General for Civil Rights issued a Policy Guidance Document, titled ''Enforcement of Title VI of the Civil Rights Act of 1964—National Origin Discrimination Against Persons With Limited English Proficiency'' (hereinafter referred to as ''DOJ LEP Guidance''), reprinted at 65 FR 50123 (August 16, 2000). However, pursuant to a memorandum issued by the United States Department of Justice on October 26, 2001, NSF is republishing this guidance and inviting public comment on the guidance.

Executive Order 13166 requires federal agencies to assess and address the needs of otherwise eligible persons seeking access to federally conducted programs and activities who, due to limited English proficiency, cannot fully and equally participate in or benefit from those programs and activities. The DOJ LEP Guidance in turn advises each federal department or agency to ''take reasonable steps to ensure 'meaningful' access [to LEP individuals] to the information and services they provide.'' DOJ LEP Guidance, 65 FR at 50124. The DOJ LEP Guidance goes on to provide that what constitutes reasonable steps to ensure meaningful access will be contingent on a number of factors. Among the factors to be considered are the number or proportion of LEP persons in the eligible service population, the frequency with which LEP individuals come in contact with the program, the importance of the service provided by the program, and the resources available to the agency. Id. The DOJ LEP Guidance explains that the identification of ''reasonable steps'' to provide oral and written services in languages other than English is to be determined on a case-by-case basis through a balancing of all four factors. As required by Executive Order 13166, this policy guidance is consistent with the compliance standards set out in the DOJ LEP Guidance.

II. Legal Background

The Title VI requirement to provide meaningful access to LEP persons is not new. Section 601 of Title VI of the Civil Rights Act of 1964, 42 U.S.C. Section 2000d, *et seq.* states: ''No person in the United States shall on the ground of race, color or national origin, be excluded from participation in, be denied the benefits of, or be subjected to, discrimination under any program or activity receiving federal financial assistance.'' This is further ordered by Executive Order 13166, ''Improving Access to Services for Persons With Limited English Proficiency,'' and United States Department of Justice Guidance as published in the **Federal Register**, Vol. 65, No. 159, August 16, 2000. Pursuant to its coordination authority over federal enforcement of Title VI, DOJ addressed in 1976 the circumstances under which recipient/covered entities might be required to provide written language assistance to LEP persons. See 28 CFR 42.405(d)(1). These regulations ''govern the respective obligations of Federal agencies regarding enforcement of Title VI.'' 28 CFR 42.405. Section 42.405(d)(1) formalized LEP obligations under Title VI which were sustained by the Supreme Court in Lau v. Nichols, 414 U.S. 563 (1974). Thus, this Guidance draws its authority from Title VI of the Civil Rights Act of 1964, as amended, 42 U.S.C. 2000d, *et seq.*; 45 CFR, Part 611 (NSF's Title VI Regulations); and 28 CFR 42.401, *et seq.* (DOJ Title VI enforcement coordination regulation). Further, this Guidance is issued pursuant to Executive Order 12250, reprinted at 42 U.S.C. 2000d, note; Executive Order 13166; and is consistent with the DOJ LEP Guidance.

III. Purpose and Application

The Title VI regulations prohibit both intentional discrimination and policies and practices that appear neutral but have a discriminatory effect. Thus, a recipient entity's policies or practices regarding the provision of benefits and services to LEP persons need not be intentional to be discriminatory, but may constitute a violation of Title VI if they have an adverse effect on the ability of national origin minorities to meaningfully access programs and services. Accordingly, it is useful for recipient entities to examine their policies and practices to determine whether they adversely affect LEP persons. This policy guidance provides a brief analytical framework consistent with the governing Title VI compliance standards set out in the DOJ LEP

Guidance to assist recipient/covered entities in conducting such assessments.

IV. Compliance and Enforcement

A four-factor analysis is recommended for compliance. Elements of an effective language assistance plan to consider are identification of LEP individuals who need language assistance, available language assistance options, training staff, providing notice to LEP persons, and monitoring effectiveness and need for modifications. It should consist of a determination of the number or proportion of eligible individuals with LEP who might be excluded from a program absent efforts to remove language barriers, their frequency of contact with the program, the nature and importance of the program (is it vital to your existence?) and the resources available. Once it is established that a need exists, one or both of two types of language assistance may be appropriate. Oral language interpretation and/or written material translation may be selected as necessary. These factors, plan elements, and their related compliance standards are discussed in detail in related guidance documents issued by other federal agencies. NSF recipients jointly funded by other federal agencies may rely upon guidance issued by those agencies.

Recipient entities have considerable flexibility in determining how to comply with their legal obligation in the LEP setting and are not required to use the suggested methods and options listed. However, recipient entities must establish and implement policies and procedures for providing language assistance sufficient to fulfill their Title VI responsibilities and provide LEP persons with meaningful access to services. NSF's regulations implementing Title VI contain compliance and enforcement provisions to ensure that a recipient's policies and practices overcome barriers resulting from language differences that would deny LEP persons an equal opportunity to participate in and access to programs, services and benefits offered by NSF. *See* 45 CFR, Part 611. We will ensure that our recipient entities fulfill their responsibilities to LEP persons through the procedures provided for in the Title VI regulations.

Executive Order 13166 requires that each federal department or agency extending federal financial assistance subject to Title VI issue separate guidance implementing uniform Title VI compliance standards with respect to LEP persons. Where recipients of federal financial assistance from NSF also receive assistance from one or more other federal departments or agencies, there is no obligation to conduct and document separate but identical analyses and language assistance plans for NSF. NSF, in discharging its compliance and enforcement obligations under Title VI, looks to analyses performed and plans developed in response to similar detailed LEP guidance issued by other federal agencies. Recipients may rely upon guidance issued by those agencies.

In determining a recipient entity's compliance with Title VI, NSF's primary concern is to ensure that the entity's policies and procedures overcome barriers resulting from language differences that would deny LEP persons a meaningful opportunity to participate in and access programs, services and benefits. A recipient entity's appropriate use of the methods and options discussed in this policy guidance is viewed by NSF as evidence of that entity's willingness to comply voluntarily with its Title VI obligations.

V. English-Only Provision

State and local laws may provide additional obligations to serve LEP individuals, but such laws cannot compel recipients of federal financial assistance to violate Title VI. For instance, given our constitutional structure, state or local ''English-only'' laws do not relieve an entity that receives federal funding from its responsibilities under federal anti-discrimination laws. Entities in states and localities with ''English-only'' laws are certainly not required to accept federal funding—but if they do, they have to comply with Title VI, including its prohibition against national origin discrimination by recipients of federal assistance. Failing to make federally assisted programs and activities accessible to individuals who are LEP, in certain circumstances, violates Title VI.

If you have any questions related to this policy, please contact the NSF Office of Equal Opportunity Programs.

[FR Doc. 02–5616 Filed 3–8–02; 8:45 am]

BILLING CODE 7555–01–P

NUCLEAR REGULATORY COMMISSION

Advisory Committee on Nuclear Waste; Notice of Meeting

The Advisory Committee on Nuclear Waste (ACNW) will hold its 133rd meeting on March 19–21, 2002, at 11545 Rockville Pike, Rockville, Maryland, Room T–2B3.

The entire meeting will be open to public attendance.

The schedule for this meeting is as follows:

Tuesday, March 19, 2002

A. *8:30–9:40 a.m.: Opening Statement/Planning and Procedures* (Open)—The Chairman will open the meeting with brief opening remarks. The Committee will then review items under consideration at this meeting and consider topics proposed for future ACNW meetings.

B. *10–12:30 p.m.: Update on DOE Performance Assessment Program* (Open)—The Committee will hear a presentation from DOE on its recent performance assessment program activities for the proposed repository at Yucca Mountain, NV.

C. *2–3:30 p.m.: Annual Research Report to the Commission* (Open)—The Committee will finalize its annual research report to the Commission.

D. *3:45–6 p.m.: Preparation for Meeting with the NRC Commissioners* (Open)—The next meeting with the NRC Commissioners is scheduled to be held at 9:30 a.m. in the Commissioners' Conference Room, One White Flint North on March 20, 2002. The Committee will review its proposed presentations.

Wednesday, March 20, 2002

E. *8:30–8:35 a.m.: Opening Remarks by the ACNW Chairman* (Open)—The ACNW Chairman will make opening remarks regarding the conduct of the meeting.

F. *8:35–9:10 a.m.: Discussion of Topics for Meeting with the NRC Commissioners* (Open)—The Committee will finalize preparations and discuss topics scheduled for the ACNW meeting with the NRC Commissioners.

G. *9:30–11:30 a.m.: Meeting with the NRC Commissioners* (Open)—The Committee will meet with the NRC Commissioners in the Commissioners' Conference Room, One White Flint North, to discuss:

- Sufficiency Review
- Total Systems Performance Assessment for Site Recommendation
- Key Technical Issues
- Review of NRC-Sponsored Research

H. *1:00–2:45 p.m.: High-Level Waste Performance Assessment Sensitivity Studies* (Open)—The staff will provide an update on its sensitivity studies related to HLW performance assessment analyses for the proposed repository at Yucca Mountain, NV.

I. *3–6 p.m.: Preparation of ACNW Reports* (Open)—The Committee will discuss proposed reports on the following topics:

- ACNW 2002 Action Plan
- Update on Igenous Activity including PA Analyses
- HLW Performance Assessment Sensitivity Studies
- Annual Research Report to the Commission

Thursday, March 21, 2002

J. *8:30–8:35 a.m.: Opening Remarks by the ACNW Chairman* (Open)—The ACNW Chairman will make opening remarks regarding the conduct of the meeting.

K. *8:35–12 Noon: Yucca Mountain Review Plan, Revision 2* (Open)—The Committee will hear presentations by and hold discussions with representatives of the NRC staff regarding the Yucca Mountain Review Plan, Revision 2.

L. *1–4 p.m.: Preparation of ACNW Reports* (Open)—The Committee will continue its discussion of proposed ACNW reports.

M. *4–4:15 p.m.: Miscellaneous* (Open)—The Committee will discuss matters related to the conduct of Committee activities and matters and specific issues that were not completed during previous meetings, as time and availability of information permit.

Procedures for the conduct of and participation in ACNW meetings were published in the **Federal Register** on October 3, 2001 (66 FR 50461). In accordance with these procedures, oral or written statements may be presented by members of the public, electronic recordings will be permitted only during those portions of the meeting that are open to the public, and questions may be asked only by members of the Committee, its consultants, and staff. Persons desiring to make oral statements should notify Mr. Howard J. Larson, ACNW (Telephone 301/415–6805), between 8 a.m. and 4 p.m. EST, as far in advance as practicable so that appropriate arrangements can be made to schedule the necessary time during the meeting for such statements. Use of still, motion picture, and television cameras during this meeting will be limited to selected portions of the meeting as determined by the ACNW Chairman. Information regarding the time to be set aside for taking pictures may be obtained by contacting the ACNW office, prior to the meeting. In view of the possibility that the schedule for ACNW meetings may be adjusted by the Chairman as necessary to facilitate the conduct of the meeting, persons planning to attend should notify Mr. Howard J. Larson as to their particular needs.

Further information regarding topics to be discussed, whether the meeting has been canceled or rescheduled, the Chairman's ruling on requests for the opportunity to present oral statements and the time allotted therefore can be obtained by contacting Mr. Howard J. Larson.

ACNW meeting notices, meeting transcripts, and letter reports are now available for downloading or viewing on the internet at *http://www.nrc.gov/ACRSACNW.*

Videoteleconferencing service is available for observing open sessions of ACNW meetings. Those wishing to use this service for observing ACNW meetings should contact Mr. Theron Brown, ACNW Audiovisual Technician (301/415–8066), between 7:30 a.m. and 3:45 p.m. EST at least 10 days before the meeting to ensure the availability of this service. Individuals or organizations requesting this service will be responsible for telephone line charges and for providing the equipment and facilities that they use to establish the videoteleconferencing link. The availability of videoteleconferencing services is not guaranteed.

Dated: March 5, 2002.

Andrew L. Bates,

Advisory Committee Management Officer.

[FR Doc. 02–5764 Filed 3–8–02; 8:45 am]

BILLING CODE 7590–01–P

RAILROAD RETIREMENT BOARD

Agency Forms Submitted for OMB Review

SUMMARY: In accordance with the Paperwork Reduction Act of 1995 (44 U.S.C. chapter 35), the Railroad Retirement Board (RRB) has submitted the following proposal(s) for the collection of information to the Office of Management and Budget for review and approval.

Summary of Proposal(s)

(1) *Collection title:* Railroad Separation Allowance or Severance Pay Report.

(2) *Form(s) submitted:* BA–9.

(3) *OMB Number:* 3220–0173.

(4) *Expiration date of current OMB clearance:* 4/30/2002.

(5) *Type of request:* Extension of a currently approved collection.

(6) *Respondents:* Business or other for-profit.

(7) *Estimated annual number of respondents:* 18.

(8) *Total annual responses:* 1,009.

(9) *Total annual reporting hours:* 1,262.

(10) *Collection description:* Section 6 of the Railroad Retirement Act provides for a lump-sum payment to an employee or the employee's survivor equal to the Tier II taxes paid by the employee on a separation allowance or severance payment for which the employee did not receive credits towards retirement. The collection obtains information concerning the separation allowances and severance payments paid from railroad employers.

FOR FURTHER INFORMATION CONTACT: Copies of the forms and supporting documents can be obtained from Chuck Mierzwa, the agency clearance officer (312–751–3363). Comments regarding the information collection should be addressed to Ronald J. Hodapp, Railroad Retirement Board, 844 North Rush Street, Chicago, Illinois, 60611–2092 and to the OMB Desk Officer for the RRB, at the Office of Management and Budget, Room 10230, New Executive Office Building, Washington, DC 20503.

Chuck Mierzwa,

Clearance Officer.

[FR Doc. 02–5702 Filed 3–8–02; 8:45 am]

BILLING CODE 7905–01–M

RAILROAD RETIREMENT BOARD

Sunshine Act Meeting

Notice is hereby given that the Railroad Retirement Board will hold a meeting on March 20, 2002, 10 a.m., at the Board's meeting room on the 8th floor of its headquarters building, 844 North Rush Street, Chicago, Illinois, 60611. The agenda for this meeting follows:

Portion Open to the Public

(1) Briefing from the Executive Committee on implementation of the Railroad Retirement and Survivors' Improvement Act of 2001

Portion Closed to the Public

(A) Board Members meet with the Executive Committee

The person to contact for more information is Beatrice Ezerski, Secretary to the Board, Phone No. 312–751–4920.

Dated: March 6, 2002.

Beatrice Ezerski,

Secretary to the Board.

[FR Doc. 02–5838 Filed 3–7–02; 10:02 am]

BILLING CODE 7905–01–M

SECURITIES AND EXCHANGE COMMISSION

[Release No. 34–45505; File No. SR–Amex–2002–13]

Self-Regulatory Organizations; Notice of Filing and Immediate Effectiveness of Proposed Rule Change by the American Stock Exchange LLC To Amend the Original Listing Criteria for Underlying Securities Contained in Amex Rule 915

March 5, 2002.

Pursuant to section 19(b)(1) of the Securities Exchange Act of 1934 (''Act''),[1] and Rule 19b–4 [2] thereunder, notice is hereby given that on March 1, 2002, the American Stock Exchange LLC (''Amex'' or ''Exchange'') filed with the Securities and Exchange Commission (the ''Commission'') the proposed rule change as described in Items I, II, and III below, which Items have been prepared by the Exchange. The Commission is publishing this notice to solicit comments on the proposed rule change from interested persons.

I. Self-Regulatory Organization's Statement of the Terms of Substance of the Proposed Rule Change

The Exchange proposes to provide an alternative original listing criteria for individual equity options that otherwise meet the standards in Commentary .01 to Rule 915 except for the requirement that the underlying security be at least $7.50.

The text of the proposed rule change appears below. New text is in italics; deletions are in brackets.

Rule 915. Criteria for Underlying Securities

(a) No Change.

(b) No Change.

Commentary .....

.01 The Board of Governors has established guidelines to be considered by the Exchange in evaluating potential underlying securities for Exchange option transactions. Absent exceptional circumstances with respect to items 1, 2, 3 or 4 listed below, at the time the Exchange selects an underlying security for Exchange options transactions, the following guidelines with respect to the issuer shall be met:

1. There are a minimum of 7,000,000 shares of the underlying security which are owned by persons other than those required to report their security holdings under Section 16(a) of the Securities Exchange Act of 1934.

2. There are a minimum of 2,000 holders of the underlying security.

3. Trading volume (in all markets in which the underlying security is traded) has been at least 2,400,000 shares in the preceding twelve months.

4. *Either (i)* [T]*t*he market price per share of the underlying security has been at least $7.50 for the majority of business days during the three calendar months preceding the date of selection, as measured by the lowest closing price reported in any market in which the underlying security traded on each of the subject days *or (ii)(a) the underlying security meets the guidelines for continued listing in Rule 916; (b) options on such underlying security are traded on at least one other registered national securities exchange; and (c) the average daily trading volume for such options over the last three (3) calendar months preceding the date of selection has been at least 5,000 contracts*.

5. The issuer is in compliance with any applicable requirements of the Securities Exchange Act of 1934.

II. Self-Regulatory Organization's Statement of the Purpose of, and Statutory Basis for, the Proposed Rule Change

In its filing with the Commission, the Exchange included statements concerning the purpose of and basis for the proposed rule change and discussed any comments it received on the proposed rule change. The text of these statements may be examined at the places specified in Item IV below. The Exchange has prepared summaries, set forth in sections A, B, and C below, of the most significant aspects of such statements.

A. Self-Regulatory Organization's Statement of the Purpose of, and Statutory Basis for, the Proposed Rule Change

(1) Purpose

Commentary. 01 to Amex Rule 915 sets forth the guidelines that an underlying individual equity security must meet before the Exchange may initially list options on that security. The Exchange states that these guidelines or requirements are uniform among four (4) out of the five (5) options exchanges. The exception is the International Securities Exchange LLC (''ISE''), because of recent Commission approval that eliminated the $7.50 standard for an underlying security when such option is otherwise listed and traded on another options exchange and has an average daily trading volume (''ADTV'') over the last three (3) calendar months of at least 5,000 contracts.[3]

The Exchange notes that its requirements for listing additional series of an existing listed option (the ''maintenance listing standards'') are less stringent. In particular, additional series may be added pursuant to Commentary .02 to Rule 916 if the underlying security is at least $3 in the primary market. The Exchange believes that this less stringent maintenance listing standard is permitted, in part, because the Exchange's other guidelines assure that options would be listed and traded on securities of companies that are financially sound and subject to adequate minimum standards. Therefore, according to the Exchange, the continued application of the Exchange's other guidelines provide that: (1) The underlying security consists of a large number of outstanding shares held by non-affiliates of the issuer; (2) the underlying security is actively-traded; (3) there are a large number of holders of the underlying security; and (4) the underlying security continues to be listed on a national securities exchange or traded through the facilities of a national securities association.

The Exchange believes that although the continued listing requirements are generally uniform among the options exchanges, with the exception of the ISE, the application of these standards in the current market environment have had an anticompetitive effect. Specifically, the Exchange states that on several occasions during the past year, it was unable to list options classes because the price of the underlying security had fallen below the initial listing requirement since the time such options were first listed on another exchange. Because the underlying security would continue to meet the lower maintenance listing standards, the other options exchange(s) may continue to trade such options—and list additional series—while the Amex may not list any options on such underlying security.

To address this situation, the Exchange proposes an alternative original listing requirement applicable to the underlying security's price during the three calendar months preceding an options listing. Specifically, Commentary .01 to Amex Rule 915 currently provides that the market price per share of the underlying security must have been at least $7.50 for the majority of business days during the

[1] 15 U.S.C. 78s(b)(1).

[2] 17 CFR 240.19b–4.

[3] *See* Securities Exchange Act Release No. 45220 (December 31, 2002), 67 FR 760 January 7, 2002) (SR–ISE–2001–33).

three calendar months preceding the date of selection for listing. The Exchange proposes to amend Commentary .01 to provide that, for underlying securities that satisfy all of the initial listing requirements other than the $7.50 per share price requirement, the Exchange would be permitted to list options on the securities so long as: (1) The underlying security meets the guidelines for continued approval contained in Amex Rule 916; (2) options on such underlying security are traded on at least one other registered national securities exchange; and (3) the ADTV for such options over the last three calendar months preceding the date of selection has been at least 5,000 contracts.

The Exchange believes that this proposal is narrowly drafted to address the circumstances where an actively-traded options class is currently ineligible for listing on the Amex while at the same time, such option is trading on another options exchange. The Exchange notes that when an underlying security meets the maintenance listing standards and at least one other exchange trades options on the underlying security, the options already are available to the investing public. Therefore, the Exchange notes that the current proposal would not introduce any additional listed options classes.

The Exchange also believes the proposed alternative original listing criteria's limitation to options that are actively-traded (*i.e.*, options with an ADTV of at least 5,000 contracts over the least three calendar months) should serve to allay any concerns regarding the listing of options that may be inappropriate. Therefore, the Exchange maintains that the proposed alternative listing standard would be limited to those options with active trading, indicating that there is widespread investor interest. Because these options are actively-traded in other markets, the Exchange further believes that there would be no investor protection concerns with listing such options on the Exchange. In addition, the Exchange believes that listing these options on the Amex would enhance competition and benefit investors.

(2) Statutory Basis

The Exchange believes that the proposed rule change is consistent with section 6(b) of the Act [4] in general and furthers the objectives of section 6(b)(5) [5] in particular in that an exchange have rules that are designed to prevent fraudulent and manipulative acts and practices, to promote just and equitable principles of trade, and, in general, to protect investors and the public interest.

B. Self-Regulatory Organization's Statement on Burden on Competition

The Exchange does not believe that the proposed rule change will impose any burden on competition.

C. Self-Regulatory Organization's Statement on Comments on the Proposed Rule Change Received From Members, Participants, or Others

No written comments were solicited or received with respect to the proposed rule change.

III. Date of Effectiveness of the Proposed Rule Change and Timing for Commission Action

The foregoing rule change has become effective pursuant to section 19(b)(3)(A) of the Act [6] and paragraph (f)(6) of Rule 19b–4 [7] thereunder because it does not: (i) Significantly affect the protection of investors or the public interest; (ii) impose any significant burden on competition; (iii) become operative for 30 days from the date on which it was filed, or such shorter time as the Commission may designate; and the Exchange has given the Commission written notice of its intention to file the proposed rule change at least five business days prior to filing. At any time within 60 days of the filing of such proposed rule change, the Commission may summarily abrogate such rule change if it appears to the Commission that such action is necessary or appropriate in the public interest, for the protection of investors, or otherwise in furtherance of the purposes of the Act.

The Commission notes that under Rule 19b–4(f)(6)(iii), the proposal does not become operative for 30 days after the date of its filing, or such shorter time as the Commission may designate if consistent with the protection of investors and the public interest. The Exchange has requested that the Commission waive the 30-day operative date. The Exchange contends that acceleration of the operative date is consistent with the protection of investors and the public interest because the language of this proposed rule is substantially similar to rule language that was put out for notice and comment when ISE submitted its proposed rule change. For this reason, consistent with section 19(b)(2) of the Act,[8] the Commission finds good cause to waive the 30-day operative period.[9]

IV. Solicitation of Comments

Interested persons are invited to submit written data, views and arguments concerning the foregoing, including whether the proposed rule change is consistent with the Act. Persons making written submissions should file six copies thereof with the Secretary, Securities and Exchange Commission, 450 Fifth Street, NW, Washington, DC 20549–0609. Copies of the submission, all subsequent amendments, all written statements with respect to the proposed rule change that are filed with the Commission, and all written communications relating to the proposed rule change between the Commission and any person, other than those that may be withheld from the public in accordance with the provisions of 5 U.S.C. 552, will be available for inspection and copying in the Commission's Public Reference Room. Copies of such filing will also be available for inspection and copying at the principal office of the Amex. All submissions should refer to File No. SR–Amex–2002–13 and should be submitted by April 1, 2002.

For the Commission, by the Division of Market Regulation, pursuant to delegated authority.[10]

Jill M. Peterson,

Assistant Secretary.

[FR Doc. 02–5815 Filed 3–8–02; 8:45 am]

BILLING CODE 8010–01–P

[4] 15 U.S.C. 78f(b).

[5] 15 U.S.C. 78f(b)(5).

[6] 15 U.S.C. 78s(b)(3)(A).

[7] 17 CFR 240.19b–4(f)(6).

[8] 15 U.S.C. 78s(b)(2).

[9] For purposes only of accelerating the operative date of this proposal, the Commission has considered the proposed rule's impact on efficiency, competition, and capital formation. 15 U.S.C. 78c(f).

[10] 17 CFR 200.30–3(a)(12).

SECURITIES AND EXCHANGE COMMISSION

[Release No. 34–45501; File No. SR–NASD–2002–28]

Self-Regulatory Organizations; Notice of Filing of Proposed Rule Change by the National Association of Securities Dealers, Inc. Relating to Fees Applicable to the NASD Alternative Display Facility

March 4, 2002.

Pursuant to Section 19(b)(1) of the Securities Exchange Act of 1934 (''Act''),[1] and Rule 19b–4 thereunder,[2] notice is hereby given that on February

[1] 15 U.S.C. 78s(b)(1).

[2] 17 CFR 240.19b-4.

20, 2002, the National Association of Securities Dealers, Inc. (''NASD'' or ''Association'') filed with the Securities and Exchange Commission (''SEC'' or ''Commission'') the proposed rule change as described in Items I, II and III below, which Items have been prepared by the NASD. The Commission is publishing this notice to solicit comments on the proposed rule change from interested persons.

I. Self-Regulatory Organization's Statement of the Terms of Substance of the Proposed Rule Change

The NASD is proposing to amend the 7000 Series of the NASD Rules to designate transaction and quotation related fees applicable to activities in the NASD's Alternative Display Facility (''ADF''). The text of the proposed rule change is set forth below. Proposed new language is in italics; proposed deletions are in brackets.[3]

* * * * *

7000. CHARGES FOR SERVICES AND EQUIPMENT

7010. System Services

(a)–(f)—deleted

[(g) Automated Confirmation Transaction Service] *(a) Trade Comparison and Reporting Service*

The following charges shall be paid by the participant for use of the [Automated Confirmation Transaction Service (ACT)] *Trade Comparison and Reporting Service (TRACS):*

Transaction Related Charges:

Comparison	[$0.0144] *$0.014*/side per 100 shares (minimum 400 shares; maximum 7,500 shares)
Automated Give-Up	*$0.029/side* [$0.01/side per 100 shares (minimum 400 shares; maximum 7,500 shares)]
Late Report—T+N	[$0.288]*$0.30*/side
Browse/query	$0.28[8]/query *
[Terminal fee	$57.00/month (ACT only terminals)]
[CTCI fee	$575.00/month]
[Nasdaq ACT	$300/month (full functionality) or $150/month (up to an average of twenty transactions per day each month) **
Trade Reporting	$.029/side (applicable only to reportable transaction not subject to trade comparison through *TRACS* [ACT])[***] **
[Risk Management Charges	$.035/side and $17.25/month per correspondent firm (maximum $10,000/month per correspondent firm)]
Corrective Transaction Charge	$0.25/ Cancel, Error, Inhibit, Kill, or 'No' portion of No/Was transaction, paid by reporting side; $0.25/ Break, Decline transaction, paid by each party;

* Each ACT query incurs the $0.288 fee; however, the first accept or decline processed for a transaction is free, to insure that no more than $0.288 is charged per comparison. Subsequent queries for more data on the same security will also be processed free. Any subsequent query on a different security will incur the $0.288 query charge.

[** For the purposes of this service only, a transaction is defined as an original trade entry, either on trade date or as-of transactions per month.]

[***]** The trade reporting service charge is applicable to those trades input into ACT for reporting purposes only, such as NSCC Qualified Special Representative reports and reports of internalized transactions.

(b) Quotation Updates

A member will be charged $0.01 per quotation update in the ADF quotation montage on those quotation updates that exceed three times the number of transactions executed or reported by the ADF member. A ''quotation update'' includes any change to the price or size of a displayed quotation. This charge will be determined on a monthly basis.

(h)–(j)—deleted

(k)—renumbered as (c)

(l)–(p)—deleted

7020. Equipment Related Charges

[(a)] The charge for using [Nasdaq] *ADF* terminal *software* [equipment] shall be [$120] *$275* per month for [the first] *each* terminal and *$550 per month for each server.* [$105 per month for each additional terminal where all terminals are located on the same premises.]

[(b) The charge for using interrogation or display devices which are not supplied by Nasdaq, but which utilize a Nasdaq supplied modem, shall be $75 per month for the first comparable device and $55 per month for each additional comparable device where all devices are located on the same premises.

(c) The charge for using interrogation or display devices and modems which are not supplied by Nasdaq shall be $50 per month for each such device located on the same premises.

(d) Nasdaq subscribers utilizing UNISYS or Tandem personal computers (PCs) authorized for emulation of the Harris standard terminal may elect to receive maintenance through Nasdaq at the rate of $55/PC/month.]

[7030. Special Options]

[Receive only Printer		$100/month.
Local Posting	Permits subscriber to use Nasdaq Level 3 terminals to enter quotations simultaneously into an internal computer system.	$10/month.
Dual Keyboard		$15/month.
Nasdaq Market Indexes	Permits vendor to process Nasdaq Level 1 and Last Sale data feeds solely for the purpose of supplying subscribers with real-time calculations of Nasdaq market indexes.	$500/month.
Non-Continuous Access to Nasdaq Level 1 and Last Sale Information.	Permits vendor to process and distribute Nasdaq Level 1 and Last Sale information to its subscribers on a non-continuous or query-response basis..	$.005/query.

[3] NASD requested that the Commission make a technical correction in proposed NASD Rule 7100, Minor Modifications in Charges, with regard to an improper reference to NASD ''Directors'' (rather than ''Governors''). Telephone conference between John S. Polise, Senior Special Counsel, Division of Market Regulation (''Division''), SEC, Christopher B. Stone, Attorney Advisor, Division, SEC, and Stephanie M. Dumont, Associate General Counsel, Office of General Counsel, NASD Regulation (February 28, 2002).

For a pilot period commencing April 3, 2000 and lasting until March 30, 2001. The fee for non continuous access to Nasdaq level one and last sale information will be reduced to $.005 per query.]

7040. Installation, Removal, [or] Relocation *or Maintenance*

ADF subscribers shall pay a minimum charge of $5,000 for installation costs associated with connecting to the ADF. Upon installation, removal, relocation *or maintenance* of terminal and related equipment, or combination thereof, the subscriber shall pay charges incurred by the Association or its subsidiaries *above the $5,000 minimum*, on behalf of the subscriber for the work being performed by the maintenance organization retained by Association or its subsidiaries. *Upon payment of $5,000 under this provision, members will receive a credit of up to $5,000 to be used toward their trade reporting and comparison charges imposed under Rule 7010(a).*

7050. Other Services

(a) Daily Reports to Newspapers

Reports for regular public release, such as a list of closing quotations or market summary information for newspaper publication, shall be produced in a format acceptable to most publishers without charge. Should such information be transmitted to another location at the request of any firm, a charge may be imposed for such services by the Association or a subsidiary.

(b) Other Requests for Data

The Association or a subsidiary may impose and collect compensatory charges for data [Nasdaq] supplied upon request, where there is no provision elsewhere in this Rule 7000 Series for charges for such service or sale.

(c) Correspondents

The charge for registration and display of a correspondent firm for a registered market maker shall be $3.50 per month for each correspondent displayed per security.

(d) Testing Services

(1) Subscribers that conduct tests of their computer-to-computer (CTCI) or digital interface (DIS/CHIPS) with the central processing facilities of *Alternative Display Facility* [The Nasdaq Stock Market, Inc. (NSMI)] shall pay the following charges:

$285/hour For CTCI/DIS/CHIPS testing between 9:00 a.m. and 5:00 p.m. Eastern Time on business days;

$333/hour For testing at all other times on business days, or on weekends and holidays.

(2) The foregoing fees shall not apply to testing occasioned by:

(A) new or enhanced services and/or software provided by *ADF* [NSMI] or

(B) modifications to software and/or services initiated by *ADF* [NSMI] in response to a contingency.

7060. Partial Month Charges—No Change

7070. *Reserved* [Subscriber Deposits]

[New and existing subscribers to Level 2/3 or Nasdaq Workstation service shall be subject to the following deposit charges per unit:

(a) New subscriber:

(1) estimated telecommunications provider charges for network infrastructure, connection and testing;

(2) two (2) months circuit charges; and

(3) estimated telecommunications provider disconnect charges.

(b) Existing subscribers subject to subscriber deposits include those that have been placed on the termination list two or more times within a two year period; those that have paid for services with one or more NSF checks; and those that have had service disconnected for non-payment but have not had equipment removed:

(1) two (2) months circuit charges; and

(2) estimated telecommunications provider disconnect charges.]

7080. Late Fees

(a) All charges imposed by *the NASD* [The Nasdaq Stock Market, Inc.] that are past due 45 days or more will be subject to a late fee computed by taking the summation of one and one-half percent (1½%) of the amount past due for the first month plus one and one-half percent (1½%) of the amount past due for any month thereafter, compounded by late fees assessed for previous months.

(b) No Change.

[7090. Mutual Fund Quotation Service]

[(a) Funds included in the Mutual Fund Quotation Service (''MFQS'') shall be assessed an annual fee of $400 per fund authorized for the News Media Lists and $275 per fund authorized for the Supplemental List. Funds authorized during the course of an annual billing period shall receive a proration of these fees but no credit or refund shall accrue to funds terminated during an annual billing period. In addition, there shall be a one-time application processing fee of $250 for each new fund authorized.

(b) Funds included in the MFQS and pricing agents designated by such funds (''Subscriber''), shall be assessed a monthly fee of $75 for each logon identification obtained by the Subscriber. A Subscriber may use a logon identification to transmit to Nasdaq pricing and other information that the Subscriber agrees to provide to Nasdaq.]

7100. Minor Modifications in Charges

(a) To compensate for minor variations in annual net income, the Board of Directors of The [Nasdaq Stock Market, Inc.] *NASD* may increase or decrease the total charges in this Schedule by 10% from the base charges as adopted on [August 28, 1979] *insert adoption date* upon filing such change with the Commission pursuant to Section 19(b)(3) of the Act.

(b) No Change.

* * * * *

II. Self-Regulatory Organization's Statement of the Purpose of, and Statutory Basis for, the Proposed Rule Change

In its filing with the Commission, the NASD included statements concerning the purpose of and the basis for the proposed rule change and discussed any comments it received on the proposed rule change. The text of these statements may be examined at the places specified in Item IV below. The NASD has prepared summaries, set forth in Sections A, B and C below, of the most significant aspects of such statements.

A. Self-Regulatory Organization's Statement of the Purpose of, and Statutory Basis for, the Proposed Rule Change

1. Purpose

As described in detail in SR–NASD–2001–90,[4] the NASD intends to operate a trade reporting and comparison service as part of the ADF. The trade reporting service would collect trade reports for NASD registered market participants, as well as any NASD member required to report transactions occurring otherwise than on an exchange. The service would transmit the reports automatically to the respective Securities Information Processors (''SIPs''), if required, for dissemination to the public and the industry. This mechanism would operate similarly to the trade reporting functions of Nasdaq's Automated

[4] See Exchange Act Release No. 45156 (December 14, 2001), 67 FR 388 (January 3, 2002).

Confirmation Transactions Service (''ACT'').[5]

The ADF also will provide for trade comparison through the Trade Comparison and Reporting Service (''TRACS''). TRACS will (1) compare trade information entered by TRACS participants and submit ''locked-in'' trades to the Depository Trust Clearing Corporation (''DTCC'') for clearance and settlement; (2) transmit reports of the transactions automatically to the respective SIPs, if required, for dissemination to the public and the industry; and (3) provide participants with monitoring capabilities to facilitate participation in a ''locked-in'' trading environment.

In SR–NASD–2001–90, the NASD stated that the proposed fees or assessments related to the ADF would be provided in a separate rule filing. Accordingly, the NASD now is proposing amendments to the Rule 7000 Series to provide for the fees and/or assessments on quotation and transaction activities on the ADF. Specifically, the NASD is proposing fees similar to those currently imposed on transaction activities in ACT and therefore, many of the amendments to the rule text are the replacement of references to ''ACT'' with ''TRACS.'' The following are fees that will be charged relating to transactions on the ADF and are similar to those currently imposed on activities in ACT: Comparison—$0.014/side per 100 shares (minimum 400 shares; maximum 7,500 shares); Automated Give-Up—$0.029/side; Late Report—T+N—$0.30/side; Browse/query—$0.28/query[6]; Trade Reporting—$.029/side (applicable only to reportable transactions not subject to trade comparison through TRACS); and Corrective Transaction Charge—$0.25. The following transaction-related charges currently in Rule 7010(g) will be deleted: Terminal fee, CTCI fee, Nasdaq ACT and Risk Management Charges.

The NASD proposes to charge an ADF workstation fee of $275 per month for each ADF terminal software license and $550 per month for each ADF server license. The NASD proposes to charge members a minimum of $5,000 for installation costs associated with connecting to the ADF, and will require reimbursement from members for charges incurred by the NASD above $5,000 due to the installation, removal, relocation or maintenance of terminal and related equipment. However, market participants will receive a credit of up to $5,000 toward their trade reporting and comparison charges.

In addition, the NASD will charge for certain other services described in Rule 7050(b) (requests for data), Rule 7050(c) (registration and display of a correspondent firm for a registered market maker) and Rule 7050(d) (charges for subscribers that conduct tests of their computer-to-computer or digital interfaces). The NASD will not be offering modems, interrogation or display devices and therefore is proposing to delete Rule 7020(b) through (d).

The NASD is proposing to delete the following provisions that currently impose fees on members for access to different levels of data services or special options: Rule 7010(a) through (f), Rule 7010(h), Rule 7030 and Rule 7070. The NASD is proposing to delete Rule 7010(i) (fees relating to transaction execution services), Rule 7010(j) (position charge for members that quote on the OTC Bulletin Board), Rule 7010(o) (Nasdaq Application of OptiMark Service) and Rule 7090 (Mutual Fund Quotation Service). As noted in SR–NASD–2001–90, the ADF will not be providing any transaction execution services and will not provide quotation services related to OTC Bulletin Board securities or mutual funds.

The NASD will not be imposing Market Data Distributor or Vendor Annual Administrative Fees and, therefore, is proposing to delete Rule 7010(l). The NASD will not be providing compliance data packages, historical research and administrative reports and, therefore, is proposing to delete Rule 7010(n) and Rule 7010(p). Finally, NASD will not be providing an Automated Voice Response Service and therefore, is proposing to delete Rule 7010(m).

The proposed rule change also provides for several administrative provisions that are identical to current rules, including partial month charges (Rule 7060) and late charges for all fees that are past due 45 days or more (Rule 7080). The proposed rule change also permits the NASD to increase or decrease the total charges described in the Rule 7000 series by 10% upon filing such changes with the SEC (Rule 7100(a)). The proposed rule change retains current Rule 7100(b).

Finally, the NASD is proposing to charge a quotation update fee of $.01 per quotation update in the ADF quotation montage. This quotation update fee, however, will apply only to those quotation updates by the member in the ADF that exceed three times the number of transactions reported by the member through the ADF. This quotation update fee will be determined on a monthly basis. By imposing this fee only where the quotation updates significantly exceed the number of transactions reported, this fee structure will fairly impose costs on those members whose quotation activity creates system capacity demands, and therefore costs that are not covered by a trade reporting fee.

2. Statutory Basis

The NASD believes that the proposed rule change is consistent with the provisions of Section 15A(b)(6)[7] of the Act, which requires, among other things, that the Association's rules be designed to prevent fraudulent and manipulative acts and practices, to promote just and equitable principles of trade, and, in general, to protect investors and the public interest. The NASD believes that the proposed rule change will provide a cost effective and efficient mechanism to quote and report trades on the ADF. The proposed rule change is also consistent with Section 15A(b)(5) of the Act[8] in that it provides for the equitable allocation of reasonable dues, fees and other charges among members and issuers and other persons using any facility or system that the Association operates or controls. The NASD believes that this fee structure is a reasonable means for the NASD to recover the development costs of the ADF, as well as meet ongoing operating costs.

B. Self-Regulatory Organization's Statement on Burden on Competition

The NASD does not believe that the proposed rule change will result in any burden on competition that is not necessary or appropriate in furtherance of the purposes of the Act.

C. Self-Regulatory Organization's Statement on Comments on the Proposed Rule Change Received From Members, Participants, or Others

Written comments were neither solicited nor received.

III. Date of Effectiveness of the Proposed Rule Change and Timing for Commission Action

Within 35 days of the date of publication of this notice in the **Federal**

[5] The NASD service would not perform risk management services that are provided by Nasdaq's ACT.

[6] Each TRACS query incurs the $0.28 fee; however, the first accept or decline processed for a transaction is free, such that no more than $0.28 is charged per comparison. Subsequent queries for more data on the same security also will be processed free. Any subsequent query on a different security will incur the $0.28 query charge.

[7] 15 U.S.C. 78o–3(b)(6).

[8] 15 U.S.C. 78o–3(b)(5).

Register or within such longer period (i) as the Commission may designate up to 90 days of such date if it finds such longer period to be appropriate and publishes its reasons for so finding, or (ii) as to which the NASD consents, the Commission will:

A. by order approve such proposed rule change, or

B. institute proceedings to determine whether the proposed rule change should be disapproved.

IV. Solicitation of Comments

Interested persons are invited to submit written data, views, and arguments concerning the foregoing, including whether the proposed rule change is consistent with the Act. Persons making written submissions should file six copies thereof with the Secretary, Securities and Exchange Commission, 450 Fifth Street, NW, Washington, DC 20549–0609. Copies of the submission, all subsequent amendments, all written statements with respect to the proposed rule change that are filed with the Commission, and all written communications relating to the proposed rule change between the Commission and any person, other than those that may be withheld from the public in accordance with the provisions of 5 U.S.C. 552, will be available for inspection and copying in the Commission's Public Reference Room. Copies of such filing will also be available for inspection and copying at the principal office of the NASD. All submissions should refer to File No. SR–NASD–2002–28 and should be submitted by April 1, 2002.

For the Commission, by the Division of Market Regulation, pursuant to delegated authority.[9]

Jill M. Peterson,

Assistant Secretary.

[FR Doc. 02–5683 Filed 3–8–02; 8:45 am]

BILLING CODE 8010–01–P

[9] 17 CFR 200.30–3(a)(12).

SECURITIES AND EXCHANGE COMMISSION

[Release No. 34–45500; File No. SR–NASD–00–82]

Self-Regulatory Organizations; Notice of Filing of Amendment Nos. 1, 2, 3, and 4 to a Proposed Rule Change by the National Association of Securities Dealers, Inc. Relating to the Assessment of Fees for Unit Investment Trusts Included in Nasdaq's Mutual Fund Quotation Service

March 4, 2002.

Pursuant to section 19(b)(1) of the Securities Exchange Act of 1934 (''Act''),[1] and Rule 19b-4 thereunder,[2] notice is hereby given that the National Association of Securities Dealers, Inc. (''NASD'' or ''Association''), through its subsidiary, the Nasdaq Stock Market, Inc. (''Nasdaq'') filed with the Securities and Exchange Commission (''SEC'' or ''Commission'') Amendment Nos. 1, 2, 3, and 4 to the proposed rule change as described in Items I, II, and III below, which Items have been prepared by Nasdaq. The proposed rule change was published for comment in the **Federal Register** on February 20, 2001.[3] The Commission received one comment letter regarding the proposed rule change.[4] On June 18, 2001, Nasdaq filed Amendment No. 1 to the proposal.[5] On June 26, 2001, Nasdaq filed Amendment No. 2 to the proposal.[6] On July 2, 2001, Nasdaq filed Amendment No. 3 to the proposal.[7] On February 11, 2002, Nasdaq filed Amendment No. 4 to the proposal.[8] The Commission is publishing this notice to solicit comments on the proposed rule change, as amended, from interested persons.

[1] 15 U.S.C. 78s(b)(1).

[2] 17 CFR 240.19b–4.

[3] *See* Securities Exchange Act Release No. 43915 (February 1, 2001), 66 FR 10926 (''February 2001 Release'').

[4] *See* letter from Barry E. Simmons, Associate Counsel, Investment Company Institute (''ICI''), to Jonathan G. Katz, Secretary, Commission, dated March 13, 2001 (''ICI Letter'').

[5] *See* letter from Edward S. Knight, Executive Vice President and General Counsel, Nasdaq, to Katherine A. England, Assistant Director, Division of Market Regulation (''Division''), Commission, dated June 15, 2001 (''Amendment No. 1''). Amendment No. 1 revises the proposal to: (1) Establish a $150 fee for replacement Unit Investment Trusts (''UITs''); and (2) respond to the ICI's comments by adopting the ICI's suggested requirements for a replacement UIT.

[6] *See* letter from Edward S. Knight , Vice President and General Counsel, Nasdaq, to Katherine A. England, Assistant Director, Division, Commission, dated June 25, 2001 (''Amendment No. 2''). The rule test provided in Amendment No. 1 indicated the way that Amendment No. 1 revised the text of current NASD Rule 7090 rather than the way that Amendment No. 1 revised the text of NASD Rule 7090 as amended by the original proposal. Amendment No. 2 replaces the text of NASD Rule 7090 proposed in Amendment No. 1 with text designed to indicate the way that Amendment No. 1 revises Nasdaq's original proposal rather than the existing text of NASD Rule 7090.

[7] *See* letter from Mary M. Dunbar, Vice President, Office of the General Counsel, Nasdaq, to Katherine A. England, Assistant Director, Division, Commission, dated June 29, 2001 (''Amendment No. 3''). Amendment No. 3 replaces the text of NASD Rule 7090 provided in Amendment No. 2 with rule text that is designed to indicate more clearly the way that Amendment No. 1 revises the text of NASD Rule 7090 was amended by the original proposal.

[8] *See* letter from Jeffrey S. Davis, Associate General Counsel, Nasdaq, to Katherine A. England, Assistant Director, Division, Commission, dated February 11, 2002 (''Amendment No. 4''). Amendment No. 4 provides a more detailed explanation of the need for the proposed fees. Specifically, among other things, Amendment No. 4 states that the application fee supports the personnel who are required to review, record, and enter each fund into the Mutual Fund Quotation Service (''MFQS''). In addition, Amendment No. 4 states that the annual fee for the News Media Lists and the Supplemental List support the NASD's continuous monitoring of funds' compliance with the standards for inclusion in the MFQS, for upgrading the technology used to collect and disseminate the MFQS, and for responding to the requests of users and subscribers for service enhancements. Amendment No. 4 also provides additional information concerning the $150 application fee for replacement UITs.

I. Self-Regulatory Organization's Statement of the Terms of Substance of the Proposed Rule Change

In the original proposal, which was published for comment in the February 2001 Release, Nasdaq proposed to amend NASD Rule 7090, ''Mutual Fund Quotation Service,'' to: (1) Revise NASD Rule 7090(a) to apply to UITs certain annual and application fees that currently apply to mutual funds; and (2) adopt NASD Rule 7090(b), which eliminated a one-time application fee if a UIT expires by its own terms during an annual billing period and is replaced within three months by a trust that is materially similar in share class and trust objective. The proposed changes to the original proposal, as published in the February 2001 Release, are below.

Proposed additions are italicized and proposed deletions are placed in [brackets].

* * * * *

7090. Mutual Fund Quotation Service

(a) No change.

(a) If a Unit Investment Trust expires by its own terms during an annual billing period and is replaced within three months by a trust that is materially similar in [share class and trust] *investment* objective, the replacing trust shall [not] be charged a one-time application fee *of $150.* [In addition, t]*T*he replacing trust shall not be

charged an annual fee if the expiring trust has already paid an annual fee for that annual billing period.

(c) No change.

* * * * *

II. Self-Regulatory Organization's Statement of the Purpose of, and Statutory Basis for, the Proposed Rule Change

In its filing with the Commission, Nasdaq included statements concerning the purpose of, and basis for, the proposed rule change and discussed any comments it received on the proposed rule change. The text of these statements may be examined at the places specified in Item IV below. Nasdaq has prepared summaries, set forth in Sections A, B, and C below, of the most significant aspects of such statements.

A. Self-Regulatory Organization's Statement of the Purpose of, and Statutory Basis for, the Proposed Rule Change

1. Purpose

NASD Rule 7090 sets forth the fees assessed for the inclusion of mutual funds in the MFQS. In its original proposal, Nasdaq proposed to: (1) Revise NASD Rule 7090(a) to apply to UITs certain annual and application fees that currently apply to mutual funds; [9] and (2) adopt NASD Rule 7090(b), which eliminated a one-time application fee for a replacing trust if a UIT expires by its own terms during an annual billing period and is replaced within three months by a trust that is materially similar in share class and trust objective. The original proposal was published for comment in the **Federal Register** on February 20, 2001.[10] The Commission received one comment letter regarding the proposal.[11]

The commenter supported Nasdaq's proposal to accommodate the manner in which UITs are offered, but recommended a technical change to the proposed rule to ensure that the fee assessment procedures for UITs operate appropriately. Specifically, the ICI recommended that Nasdaq eliminate the requirement in proposed NASD Rule 7090(b) that the replacement UIT be similar in ''share class'' to the replacing UIT because UITs do not issue shares, nor do they have different classes of shares. The ICI recommended that Nasdaq revise proposed NASD Rule 7090(b) to state that ''[i]f a UIT expires by its own terms during an annual billing period and is replaced within three months by a trust that has a materially similar investment objective, the replacing trust shall not be charged a one-time application fee.'' [12]

In Amendment No. 1, Nasdaq revised its proposal to: (1) adopt the commenter's suggested requirements for the definition of a ''materially similar'' replacement trust; and (2) provide that, instead of eliminating the one-time application fee for a replacing trust, the replacing UIT would be charged a one-time application fee of $150. Thus, NASD Rule 7090(b), as amended, provides that if a UIT expires by its own terms during an annual billing period and is replaced within three months by a trust that is materially similar in investment objective, the replacing trust shall be charged a one-time application fee of $150.

With regard to the $150 one-time application fee, Nasdaq states in Amendment No. 1 that after submitting its original proposal, Nasdaq received new information indicating that the number of UITs that would potentially qualify for the application fee waiver was substantially greater than first anticipated. Nasdaq states that, recognizing the finite character of UITs, Nasdaq had initially proposed to offer a full fee waiver although the full fee itself only partially offsets the costs Nasdaq incurs for processing each application. In light of the increased numbers of funds potentially eligible for the fee waiver, Nasdaq states in Amendment No. 1 that it is compelled to offer only a partial fee waiver, reducing the waiver by $100. Thus, Nasdaq proposes to impose a one-time application fee of $150 for replacement UITs, rather than Nasdaq's standard $250 fee.

In Amendment No. 4, Nasdaq provides additional reasons for assessing the proposed fees on UITs and discusses the need for the $150 application fee for replacement trusts. With regard to the $150 application fee, Nasdaq states after filing its original proposal, it discovered two pertinent facts: (1) That a significant number of UITs would qualify as replacement UITs; and (2) that, despite their similarity to the funds they replace, replacement UITs will require significant processing before entry into the MFQS. Nasdaq states that although it had hoped to waive the application for replacement funds entirely, it is economically constrained to offer only a $100 waiver. Nasdaq believes that the replacement fee constitutes an equitable allocation of fees among users of the service.

With regard to the need to assess fees for including UITs in the MFQS, Nasdaq states that the application fee supports the Fund Operations personnel who are required to review, record, and enter each fund into the MFQS system for subsequent dissemination to electronic or print subscribers. Nasdaq states that the annual fee for the News Media Lists and the Supplemental List support the NASD's continuous monitoring of funds' compliance with the standards for inclusion in the MFQS, and for responding to the requests of users and subscribers for service enhancements. Nasdaq notes that the NASD maintains a staff and dedicated technology to produce the MFQS, which provides transparency to investors and a valuable service to subscribers. Nasdaq believes that the application and annual fees have for many years been part of an equitable allocation of fees among users of the service because they are assessed to subscribers in direct proportion to their usage of the service.

2. Statutory Basis

Nasdaq believes that the proposed rule change is consistent with the provisions of sections 15A(b)(6) [13] and Section 11A [14] of the Act. Section 15A(b)(6) requires that the rules of a registered national securities association be designed to prevent fraudulent and manipulative acts and practices, to promote just and equitable principals of trade, to foster cooperation and coordination with persons engaged in regulating, clearing, settling, processing information with respect to, and facilitating transactions in securities, to remove impediments to and perfect the mechanism of a free and open market and a national market system, and, in general, to protect investors and the public interest; and are not designed to permit unfair discrimination between customers, issuers, brokers, or dealers. In Section 11A(a)(1)(C), Congress found that is in the public interest and appropriate for the protection of investors and the maintenance of fair and orderly markets to assure: (1) Economically efficient execution of securities transactions; (2) fair competition among brokers and dealers; (3) the availability to brokers, dealers and investors of information with respect to quotations and transactions in

[9] Specifically, the original proposal revised NASD Rule 7090(a) to provide that UITs included in the MFQS shall be assessed an annual fee of $400 per trust authorized for the News Media Lists and $275 per trust authorized for the Supplemental List. In addition, NASD Rule 7090(a) imposes a one-time application processing fee of $250 for each new trust authorized.

[10] *See* February 2001 Release, *supra* not 3.

[11] *See* ICI Letter, *supra* note 4.

[12] *See* ICI Letter, *supra* note 4.

[13] 15 U.S.C. 78o–3(b)(6).

[14] 15 U.S.C. 78k–1.

securities; (4) the practicability of brokers executing investors orders in the best market; and (5) an opportunity for investors orders to be executed without the participation of a dealer.

Nasdaq believes that the proposed rule change is consistent with the provisions of sections 15A(b)(6) and 11A(a)(1)(C) of the Act because the proposal protects investors and the public interest by promoting better processing of price information in UITs. Nasdaq believes that the proposed listing fees will encourage the listing of UITs, thereby providing greater pricing information for a broader base of investments for which there is significant investor interest. Nasdaq also believes that the proposed listing fees will enable Nasdaq to identify, screen and list bona fide UITs with a meaningful investor base and trading interest.

B. Self-Regulatory Organization's Statement on Burden on Competition

Nasdaq does not believe that the proposed rule change will result in any burden on competition.

C. Self-Regulatory Organization's Statement on Comments on the Proposed Rule Change Received From Members, Participants, or Others

Nasdaq has neither solicited nor received written comments on the proposed rule change.

III. Date of Effectiveness of the Proposed Rule Change and Timing for Commission Action

Within 35 days of the date of publication of this notice in the **Federal Register** or within such longer period (i) as the Commission may designate up to 90 days of such date if it finds such longer period to be appropriate and publishes its reasons for so finding or (ii) as to which the NASD consents, the Commission will:

(A) By order approve such proposed rule change, or

(B) Institute proceedings to determine whether the proposed rule change should be disapproved.

IV. Solicitation of Comments

Interested persons are invited to submit written data, views and arguments concerning Amendment Nos. 1, 2, 3, and 4, including whether the amendments are consistent with the Act. Persons making written submissions should file six copies thereof with the Secretary, Securities and Exchange Commission, 450 Fifth Street, NW., Washington, DC 20549–0609. Copies of the submission, all subsequent amendments, all written statements with respect to the proposed rule change that are filed with the Commission, and all written communications relating to the proposed rule change between the Commission and any person, other than those that may be withheld from the public in accordance with the provisions of 5 U.S.C. 552, will be available for inspection and copying in the Commission's Public Reference Room. Copies of such filing will also be available for inspection and copying at the principal office of the NASD.

All submissions should refer to File No. SR–NASD–00–82 and should be submitted by April 1, 2002.

For the Commission, by the Division of Market Regulation, pursuant to delegated authority.[15]

Jill M. Peterson,

Assistant Secretary.

[FR Doc. 02–5684 Filed 3–8–02; 8:45 am]

BILLING CODE 8010–01–P

SECURITIES AND EXCHANGE COMMISSION

[Release No. 34–45504 ; File No. SR–NASD–2002–30]

Self-Regulatory Organizations; Notice of Filing and Immediate Effectiveness of Proposed Rule Change By the National Association of Securities Dealers, Inc., To Extend the Pilot for the Operation of the Short Sale Rule in a Decimals Environment

March 5, 2002.

Pursuant to section 19(b)(1) of the Securities Exchange Act of 1934 (''Act''),[1] and Rule 19b–4 thereunder,[2] notice is hereby given that on March 1, 2002, the National Association of Securities Dealers, Inc. (''NASD'' or ''Association''), through its subsidiary, the Nasdaq Stock Market, Inc. (''Nasdaq''), filed with the Securities and Exchange Commission (''Commission'') the proposed rule change as described in Items I, II and III below, which Items have been prepared by Nasdaq. Nasdaq filed the proposal pursuant to section 19(b)(3)(A) of the Act,[3] and Rule 19b–4(f)(6)[4] thereunder, which renders the proposal effective upon filing with the Commission. The Commission is publishing this notice to solicit comments on the proposed rule change from interested persons.

I. Self-Regulatory Organization's Statement of the Terms of Substance of the Proposed Rule Change

Nasdaq proposes to extend through April 15, 2002, the penny ($0.01) legal short sale standard contained in NASD Interpretative Material 3350 (''IM–3350''). Without such an extension this standard would terminate on March 1, 2002. Nasdaq does not propose to make any substantive changes to the pilot; the only change is an extension of the pilot's expiration date through April 15, 2002. Nasdaq requests that the Commission waive both the 5-day notice and 30-day pre-operative requirements contained in Rule 19b–4(f)(6)(iii)[5] of the Act. If such waivers are granted by the Commission, Nasdaq will implement this rule change immediately.

II. Self-Regulatory Organization's Statement of the Purpose of, and Statutory Basis for, the Proposed Rule Change

In its filing with the Commission, Nasdaq included statements concerning the purpose of and basis for its proposal and discussed any comments it received regarding the proposal. The text of these statements may be examined at the places specified in Item IV below. Nasdaq has prepared summaries, set forth in Sections A, B and C below, of the most significant aspects of such statements.

A. Self-Regulatory Organization's Statement of the Purpose of, and Statutory Basis for, the Proposed Rule Change

1. Purpose

On March 2, 2001, the Commission approved, on a one-year pilot basis ending March 1, 2002,[6] Nasdaq's proposal to establish a $0.01 above the bid standard for legal short sales in Nasdaq National Market securities as part of the Decimals Implementation Plan for the Equities and Options Markets. Nasdaq now proposes to extend, through April 15, 2002, that pilot program. Extension until April 15th, will allow the termination date of the short sale pilot to coincide with the termination date of Nasdaq's decimal-related Manning customer limit order protection pilot and the termination date set by the Commission for all decimal-related pilot programs.[7] If

---

[15] 17 CFR 200.30–2(a)(12).

[1] 15 U.S.C. 78s(b)(1).

[2] 17 CFR 240.19b–4.

[3] 15 U.S.C. 78s(b)(3)(A).

[4] 17 CFR 240.19b–4(f)(6).

[5] 17 CFR 240.19b–4(f)(6)(iii).

[6] Securities Exchange Act Release No. 44030 (March 2, 2001), 66 FR 14235 (March 9, 2001).

[7] Nasdaq recently filed with the Commission to obtain permanent approval of the penny short sale rule. (*See* SR–NASD 2002–09). Please note that Nasdaq incorrectly stated in that filing that it had

approved, Nasdaq would continue during the pilot period to require NASD members seeking to effect ''legal'' short sales when the current best (inside) bid displayed by Nasdaq is lower that the previous bid, to execute those short sales at a price that is at least $0.01 above the current inside bid in that security. Nasdaq believes that continuation of this pilot standard appropriately takes into account the important investor protections provided by the short sale rule and the ongoing relationship of the valid short sale price amount to the minimum quotation increment of the Nasdaq market (currently also $0.01).

2. Statutory Basis

Nasdaq believes that the proposed rule change is consistent with the provisions of section 15A(b)(6) of the Act[8] in that it is designed to: (1) Promote just and equitable principles of trade; (2) foster cooperation and coordination with persons engaged in regulating, clearing, settling, processing information with respect to and facilitating transactions in securities; (3) perfect the mechanism of a free and open market and a national market system; and (4) protect investors and the public interest.

B. Self-Regulatory Organization's Statement on Burden on Competition

Nasdaq does not believe that the proposed rule change will impose any inappropriate burden on competition.

C. Self-Regulatory Organization's Statement on Comments on the Proposed Rule Change Received From Members, Participants or Others

Written comments were neither solicited nor received.

III. Date of Effectiveness of the Proposed Rule Change and Timing for Commission Action

Because the foregoing proposed rule change does not:

(i) Significantly affect the protection of investors or the public interest;

(ii) Impose any significant burden on competition; and

(iii) Become operative for 30 days from the date on which it was filed, or such shorter time as the Commission may designate if consistent with the protection of investors and the public interest, it has become effective pursuant to section 19(b)(3)(A) of the Act[9] and Rule 19b-4(f)(6) thereunder.[10]

At any time within 60 days of the filing of the proposed rule change, the Commission may summarily abrogate such rule change if it appears to the Commission that such action is necessary or appropriate in the public interest, for the protection of investors, or otherwise in furtherance of the purposes of the Act.

Nasdaq has requested the Commission waive both the 5-day notice and 30-day pre-operative requirements contained in Rule 19b–4(f)(6)[11] and has requested that the Commission accelerate the operative date. The Commission finds good cause to waive both the 5-day notice and 30-day pre-operative requirements because the extension of the pilot is consistent with the protection of investors and the public interest. Acceleration of the operative date will allow the pilot to continue uninterrupted through April 15, 2002, the deadline for which self-regulatory organizations must file proposed rule changes to set the minimum price variation for quoting in a decimals environment. For these reasons, the Commission finds good cause to waive both the 5-day notice and 30-day pre-operative requirements.[12]

IV. Solicitation of Comments

Interested persons are invited to submit written data, views, and arguments concerning the foregoing, including whether the proposal is consistent with the Act. Persons making written submissions should file six copies thereof with the Secretary, Securities and Exchange Commission, 450 Fifth Street, NW., Washington, DC 20549–0609. Copies of the submission, all subsequent amendments, all written statements with respect to the proposed rule change that are filed with the Commission, and all written communications relating to the proposed rule change between the Commission and any person, other than those that may be withheld from the public in accordance with the provisions of 5 U.S.C. 552, will be available for inspection and copying in the Commission's Public Reference Room. Copies of such filing will also be available for inspection and copying at the principal office of Nasdaq. All submissions should refer to file number SR–NASD–2002–30 and should be submitted by April 1, 2002.

For the Commission, by the Division of Market Regulation, pursuant to delegated authority.[13]

Jill M. Peterson,

Assistant Secretary.

[FR Doc. 02–5780 Filed 3–8–02; 8:45 am]

BILLING CODE 8010–01–U

filed to extend the short sale pilot until April 15, 2002.

[8] 15 U.S.C. 78o–3(b)(6).

[9] 15 U.S.C. 78s(b)(3)(A).

[10] 17 CFR 240.19b–4(f)(6).

[11] *Id.*

[12] For purposes only of accelerating the operative date of this proposal, the Commission has considered the proposed rule's impact on efficiency, competition, and capital formation. 15 U.S.C. 78c(f).

[13] 17 CFR 200.30–3(a)(12).

SECURITIES AND EXCHANGE COMMISSION

[Release No. 34–45506; File No. SR–NASD–2002–18]

Self Regulatory Organizations; Notice of Filing of a Proposed Rule Change by the National Association of Securities Dealers, Inc., Relating to Member Transaction Fees

March 5, 2002.

Pursuant to section 19(b)(1) of the Securities Exchange Act of 1934 (''Act''),[1] and Rule 19b4 thereunder,[2] notice is hereby given that on February 5, 2002, the National Association of Securities Dealers, Inc. (''NASD'') through its subsidiary, The Nasdaq Stock Market, Inc. (''Nasdaq'') filed with the Securities and Exchange Commission (''SEC'' or ''Commission'') the proposed rule change as described in Items I, II, and III below, which Items have been prepared by Nasdaq. The Commission is publishing this notice to solicit comments on the proposed rule change, as amended, from interested persons.

I. Self-Regulatory Organization's Statement of the Terms of Substance of the Proposed Rule Change

In order to encourage NASD members to report their trades through Nasdaq, Nasdaq is proposing to charge lower transaction fees to market participants that use Nasdaq as their market of choice for trade reporting, while charging higher fees to market participants that avail themselves of Nasdaq's quotation montage or make limited use of its transaction execution systems but elect to report trades through other facilities.[3] Nasdaq

[1] 15 U.S.C. 78s(b)(1).

[2] 17 CFR 240.19b4.

[3] Nasdaq believes that this proposed rule change establishes or changes a due, fee, or other charge imposed by a self-regulatory organization and conceivably could be designated as immediately effective under Section 19(b)(3)(A) of the Act, 15 U.S.C. 78s(b)(3)(A). After discussions with Commission staff, Nasdaq determined that the proposed rule change should be filed under Section 19(b)(2), 15 U.S.C. 78s(b)(2), to provide an opportunity for a more extensive comment process. If the Commission approves this filing, however, Nasdaq reserves the right to file future modifications to the pricing structure proposed

Continued

requests that the Commission approve the proposal as an amendment to certain provisions of Nasdaq's pricing structure that are currently in effect on a pilot basis until October 31, 2002, with the proposal taking effect on the first day of the month immediately following approval by the Commission.[4] The text of the proposed rule change is set forth below. Proposed new language is in italics; proposed deletions are in brackets.

* * * * *

7010. System Services

(a)(1) No change.

(2) Market Data Revenue Sharing

(A) For a pilot period lasting until October 31, 2002, [NASD members] *Full Contribution Members (as defined in Rule 7010(i)(2))* shall receive a market data revenue sharing credit. The total credit shall be calculated in accordance with the following formula:

Credit = (0.80) × (Eligible Revenue) × (Member's Volume Percentage)

(B) Definitions. The following definitions shall apply to this Rule:

(i) ''Eligible Revenue'' shall mean:

a. The portion of the net distributable revenues that Nasdaq, through the NASD, is eligible to receive under the Nasdaq UTP Plan, that is attributed to the Nasdaq Level 1 Service for Eligible Securities, minus

b. The portion of the fee charged to Nasdaq by NASD Regulation, Inc. for regulatory services allocated to the Nasdaq Level 1 Service for Eligible Securities.

(ii) ''Eligible Securities'' shall mean all Nasdaq National Market securities and any other security that meets the definition of ''Eligible Security'' in the Nasdaq UTP Plan.

(iii) ''Member's Volume Percentage'' shall mean the average of:

a. The percentage derived from dividing the total number of trades in Eligible Securities that the member reports in accordance with NASD trade reporting rules to the Automated Confirmation Transaction Service (''ACT'') by the total number of trades in Eligible Securities reported to ACT by NASD members, and

b. The percentage derived from dividing the total number of shares represented by trades in Eligible Securities that the member reports in accordance with NASD trade reporting rules to ACT by the total number of shares represented by all trades in Eligible Securities reported to ACT by NASD members.

(iv) ''Nasdaq UTP Plan'' shall mean the Joint Self-Regulatory Plan Governing the Collection, Consolidation and Dissemination of Quotation and Transaction Information for Nasdaq-Listed Securities Traded on Exchanges on an Unlisted Trading Privilege Basis.

(b)–(h) No change.

(i) Transaction Execution Services

(1) No change.

(2) Nasdaq National Market Execution System (SuperSoes)[5]

(A) The following charges shall apply to the use of the Nasdaq National Market Execution System:

Order Entry Charge—$0.10 per order entry (entering party only)

Per Share Charge—$0.001 per share executed for all fully or partially executed orders (entering party only)

Cancellation Fee—$0.25 per order cancelled (canceling party only)

(B)(i) For a pilot period [commencing on November 1, 2001 and] lasting until October 31, 2002, the per share charge will be [$0.002 per share executed for all fully or partially executed orders (entering party only).] *determined as follows:*

Full Contribution Members: $0.002 per share executed for all fully or partially executed orders (entering party only)

Partial Contribution Members: $0.0025 per share executed for all fully or partially executed orders (entering party only)

(ii) Definitions. The following definitions shall apply to this Rule:

a. ''Full Contribution Member'' shall mean an NASD member whose Reporting Percentage was at least 95% in the preceding month. Nasdaq will request that a member submit data demonstrating that it satisfies the definition of a Full Contribution Member if Nasdaq needs such data to determine whether a member is a Full Contribution Member. Nasdaq will deem a member that fails to submit such data upon request to be a Partial Contribution Member.

b. ''Partial Contribution Member'' shall mean an NASD member whose Reporting Percentage was less than 95% in the preceding calendar month.

c. ''Reporting Percentage'' shall mean the average of:

(I) the percentage derived from dividing the total number of trades in Eligible Securities (as defined in NASD Rule 7010(a)(2)(B)) that a member reports in accordance with NASD trade reporting rules to the Automated Confirmation Transaction Service (''ACT'') by the total number of trades in Eligible Securities that such member reports to all self-regulatory organizations and securities information processors, and

(II) the percentage derived from dividing the total number of shares represented by trades in Eligible Securities that such member reports in accordance with NASD trade reporting rules to ACT by the total number of shares represented by all trades in Eligible Securities that such member reports to all self-regulatory organizations and securities information processors.

If Nasdaq determines that a member is causing a significant percentage of trades to be reported through an affiliate primarily for the purpose of maintaining its Reporting Percentage above 95%, Nasdaq will consider trades reported through such affiliate to be trades reported by the member for purposes of calculating the Reporting Percentage.

(3)–(4) No change.

(5) Quotation Updates

(A) Except as provided in subparagraph (B), for a pilot period [commencing on February 1, 2002 and] lasting until October 31, 2002, a fee of $0.01 per quotation update will be charged to [NASD members] *Full Contribution Members* that post quotations in the Nasdaq quotation montage*, and a fee of $0.02 per quotation update will be charged to Partial Contribution Members that post quotations in the Nasdaq quotation montage.* A ''quotation update'' includes any change to the price or size of a displayed quotation or reserve size.

(B) A quotation update fee will not be charged for a change in the displayed quotation or reserve size that is performed automatically by the Nasdaq

herein under Section 19(b)(3)(A). *See* discussion *infra* at n.8.

[4] It should be noted that Nasdaq will file a new pricing structure for its SuperMontage system, which is expected to become operational later this year, and that the new pricing structure will replace the current pricing structure for the Nasdaq National Market Execution System (the ''NNMS'' or ''SuperSOES'') and SelectNet systems, including pricing pilots that are in effect. Certain aspects of the new pricing structure, however, may resemble the current structure.

[5] In Securities Exchange Act Release No. 44391 (Oct. 12, 2001), 66 FR 53276 (Oct. 19, 2001) (SR–NASD–2001–72), Nasdaq has proposed amending NASD Rule 7010(i)(2) to include a definition of ''Participating UTP Exchange'' and to set the price for trade executions through the NNMS by Participating UTP Exchanges at $0.003 per share. Nasdaq proposed to define ''Participating UTP Exchange'' as any registered national securities exchange that has unlisted trading privileges (a ''UTP Exchange'') in Nasdaq-listed securities pursuant to the Joint Self-Regulatory Plan Governing the Collection, Consolidation, and Dissemination of Quotation and Transaction Information for Nasdaq-Listed Securities Traded on an Unlisted Trading Privilege Basis (the ''Nasdaq UTP Plan'' or the ''Plan'') and that elects to participate in the NNMS. Nasdaq represents that depending on the order in which SR–NASD–2001–72 and this filing are approved, it will submit conforming amendments either to SR–NASD–2001–72 or to this filing to reflect the approval of the other filing.

National Market Execution System (''NNMS'') when an execution against the quotation occurs (other than a change performed by the ''Autoquote Refresh'' functionality of the NNMS, for which a fee will be assessed).

(j)–(p) No change.

* * * * *

II. Self-Regulatory Organization's Statement of the Purpose of, and Statutory Basis for, the Proposed Rule Change

In its filing with the Commission, Nasdaq included statements concerning the purpose of, and basis for, the proposed rule change and discussed any comments it received on the proposed rule change. The text of these statements may be examined at the places specified in Item IV below. Nasdaq has prepared summaries, set forth in Sections A, B, and C below, of the most significant aspects of such statements.

A. Self-Regulatory Organization's Statement of the Purpose of, and Statutory Basis for, the Proposed Rule Change

1. Purpose

On September 28, 2001, Nasdaq filed proposed rule changes to make modifications to the pricing structure for the NNMS and SelectNet service.[6] Nasdaq designed these changes as an interim modification to begin the process of aligning the charges to market participants for using the NNMS and SelectNet more closely with the costs of providing these services and the benefits that they provide to market participants. On October 4, 2001, Nasdaq filed additional rule changes to increase the per share charge for use of the NNMS and introduce a liquidity provider rebate for NASD members.[7]

On October 9, 2001, Nasdaq filed a proposed rule change—SR–NASD–2001–71—to introduce a mechanism for sharing market data revenue with NASD members, to introduce a quotation update charge, and to modify the fees for use of the NNMS and the liquidity provider rebate in order to calibrate the level of fees and rebates to the contributions that types of members make to the support of the Nasdaq market.[8] On November 29, 2001, after discussions with Commission staff, Nasdaq withdrew SR–NASD–2001–71 prior to the date scheduled for its implementation, December 1, 2001, to allow Nasdaq to make adjustments to the mechanism for market data revenue sharing and the quotation update charge, and to provide interested persons with a greater opportunity to comment on aspects of the proposal concerning differentiation among members. On December 27, 2001, Nasdaq refiled a proposal to introduce a quote update fee and market data revenue sharing program.[9]

In this filing, Nasdaq is offering incentives to market participants that support Nasdaq operations through trade reporting. The proposal delineates two types of members. A ''Full Contribution Member'' is defined as an NASD member that reports at least 95% of the trades that it reports through the Automated Confirmation Transaction System (''ACT''), Nasdaq's trade reporting system, either directly or as a result of an execution through a Nasdaq transaction execution system. The percentage would be measured with reference to both the total number of trades and the total number of shares represented by those trades. All other NASD members will be considered ''Partial Contribution Members'' under the proposal.

A member's status will be evaluated on a monthly basis, with reference to trade reporting activity during the preceding month. Nasdaq will request that a member submit data demonstrating that it satisfies the definition of a Full Contribution Member if it needs such data to determine the status of a particular member, and will deem a member that fails to submit such data upon request to be a Partial Contribution Member.[10] In addition, if Nasdaq determines that a member is causing a significant percentage of trades to be reported through an affiliate (i.e. a person that controls, is controlled by, or is under common control with a member) primarily for the purpose of maintaining its Reporting Percentage above 95%, Nasdaq will consider trades reported through such affiliate to be trades reported by the member for purposes of calculating the Reporting Percentage. This flexibility in the application of the rule is necessary to ensure that a member does not evade the intent of the rule by conducting non-Nasdaq business through an affiliate while retaining its own status as a Full Contribution Member for the business that it does conduct through Nasdaq.

The per share charge for the execution of orders in the NNMS will remain $0.002 per share for Full Contribution Members, while Partial Contribution Members will pay $0.0025 per share.[11] Nasdaq's new quotation update fee, which went into effect on February 1, 2002, will remain $0.01 per quotation update for Full Contribution Members but will be increased to $0.02 per update for Partial Contribution Members.[12] Finally, Nasdaq's new market data revenue sharing program, which also went into effect on February 1, 2002, will be modified to make it available only to Full Contribution Members.

Nasdaq represents that it is proposing these changes to its pricing structure in order to meet the competitive challenges posed by UTP Exchanges. From 1986 until 1999, only the Chicago Stock Exchange, Inc. (''CHX'') traded Nasdaq-listed securities pursuant to the Nasdaq UTP Plan, and only on a very limited scale. In late 1999 and early 2000, however, trading volumes in Nasdaq securities expanded dramatically. As a result, five additional exchanges—the Cincinnati Stock Exchange, Inc. (''CSE''), the Philadelphia Stock Exchange, Inc. (''Phlx''), the Pacific Exchange, Inc. (''PCX''), the American Stock Exchange LLC (''AMEX''), and the Boston Stock Exchange, Inc. (''BSE'')—have commenced, or announced their intention to commence, trading of

[6] *See* Securities Exchange Act Release No. 44899 (Oct. 2, 2001), 66 FR 51707 (Oct. 10, 2001) (SR–NASD–2001–63); Securities Exchange Act Release No. 44898 (Oct. 2, 2001), 66 FR 51703 (Oct. 10, 2001) (SR–NASD–2001–64).

[7] *See* Securities Exchange Act Release No. 44914 (Oct. 9, 2001), 66 FR 52649 (Oct. 16, 2001) (SR–NASD–2001–68); Securities Exchange Act Release No. 44910 (Oct. 5, 2001), 66 FR 52167 (Oct. 12, 2001) (SR–NASD–2001–67).

[8] *See* Securities Exchange Act Release No. 44918 (Oct. 10, 2001), 66 FR 52814 (Oct. 17, 2001) (SR–NASD–2001–71). Nasdaq withdrew SR–NASD–2001–71 by letter dated November 29, 2001. Also on October 9, 2001, Nasdaq filed a proposed rule change to increase the per share charge payable by UTP Exchanges that use the NNMS. *See* Securities Exchange Act Release No. 44391 (Oct 12, 2001), 66 FR 53276 (Oct. 19, 2001) (SR–NASD–2001–72).

[9] *See* Securities Exchange Act Release No. 45342 (Jan. 28, 2002), 67 FR 5109 (Feb. 1, 2002) (SR–NASD–2001–96). The proposal was effective upon filing and was implemented on February 1, 2002.

[10] To eliminate any administrative burdens associated with verification of a member's status, a member could authorize the NASD to certify its status to Nasdaq on the basis of Order Audit Trail System (''OATS'') data. Nasdaq, however, would not have access to the member's OATS data.

[11] In SR–NASD–2001–72, Nasdaq proposed amending NASD Rule 7010(i)(2) to provide that Participating UTP Exchanges will pay $0.003 per share for NNMS executions. Nasdaq proposed to define a ''Participating UTP Exchange'' as any UTP Exchange that elects to participate in the NNMS. Other UTP Exchanges access the Nasdaq market through telephone linkages and therefore are not assessed charges for the use of Nasdaq transaction execution systems. Depending on the order in which SR–NASD–2001–72 and this filing are approved, Nasdaq will submit conforming amendments either to SR–NASD–2001–72 or to this filing to reflect the approval of the other filing.

[12] However, quote updates that are performed automatically by SuperSOES as the result of trade executions would continue to be free for all members.

Nasdaq-listed securities pursuant to unlisted trading privileges. Moreover, some UTP Exchanges are aggressively pursuing the trade reporting revenue associated with internalized trades and trades conducted through the facilities of electronic communications networks. Nasdaq has every intention of being an active participant in the competition for trade execution and reporting.

Nasdaq represents that self-regulatory organization pricing structures routinely distinguish among members on the basis of level of usage of a particular system. For example, Nasdaq's current pricing for liability orders executed through its SelectNet service charges $0.90 per order for the first 25,000 orders that a member executes during a month, but only $0.60 for the next 25,000, and $0.10 for the next 200,000, with all remaining orders being free. Thus, a member that conducts a great deal of business through SelectNet will pay a lower per order charge than a member that conducts relatively little business.

Similarly, the distinction between Full Contribution Members and Partial Contribution Members recognizes that although most members are well-integrated into Nasdaq's market structure and would therefore be considered Full Contribution Members, other members may choose not to use Nasdaq as their market of first choice for trade reporting. For example, a member may use Nasdaq's quotation montage to advertise available liquidity, but the quote may be accessed through non-Nasdaq systems and reported to a UTP Exchange. Nasdaq believes that it must ensure that the capacity of its quotation engine is adequate to support the member's quotation activity and it must finance the regulatory infrastructure that oversees the member's activities on Nasdaq and the market in general, but it would receive proportionately less revenue from the member than from a comparable member that reported trades through ACT. Accordingly, when a Partial Contribution Member chooses to use Nasdaq systems for quotation or trade execution, Nasdaq believes that it should be permitted to assess a higher charge than it does on a Full Contribution Member. The distinction between types of members is comparable to any other pricing structure that offers lower prices to regular users of a service but charges higher prices to less regular users. Unlike a system of volume-based discounts, however, the proposal would not disadvantage small firms that report most of their trades through Nasdaq but do not achieve a high volume.

2. Statutory Basis

Nasdaq believes that the proposed rule change is consistent with the Act, including section 15A(b)(5) of the Act,[13] which requires that the rules of the NASD provide for the equitable allocation of reasonable fees, dues, and other charges among members and issuers and other persons using any facility or system which the NASD operates or controls, and section 15A(b)(6) of the Act,[14] which requires rules that are not designed to permit unfair discrimination between customers, issuers, brokers or dealers. In Nasdaq's view, these provisions require Nasdaq to establish prices that provide similar treatment to similarly situated members; they do not require Nasdaq to provide identical treatment to all market participants without regard to their level of participation in the market.

As the Commission has noted in the context of another self-regulatory organization's fees, the Act ''prohibits 'unfair discrimination,' not 'discrimination' simpliciter * * *''.[15] Nasdaq believes that the proposed fee structure distinguishes among market participants in order to reward those who do the most to finance market innovations such as SuperSOES and who contribute the most to the liquidity and efficient operation of Nasdaq's market, while imposing higher fees on market participants that receive the benefits of posting quotations on Nasdaq systems but pay relatively little to support the operation of those systems. Thus, the economic incentives embodied by the new fee structure are designed to promote behavior that benefits both the market structure that Nasdaq offers to investors and Nasdaq as a business. As another self-regulatory organization noted when it established a credit available only to certain of its market participants, ''measures * * * designed to promote and encourage certain behaviors and/or discourage others * * * [are] an appropriate, nondiscriminatory business strategy.''[16]

Moreover, Nasdaq believes that the level of fees charged to market participants under the proposal is reasonable. By definition, a Partial Contribution Member will make less use of Nasdaq systems than a Full Contribution Member. Accordingly, assessing higher fees on the former will not result in the member paying unreasonably high fees for the services that it does obtain from Nasdaq.

B. Self-Regulatory Organization's Statement on Burden on Competition

Nasdaq does not believe that the proposed rule change will impose any burden on competition that is not necessary or appropriate in furtherance of the purposes of the Act. Nasdaq believes that the proposal is designed as a reasonable response to the competitive challenges posed by UTP Exchanges. UTP Exchanges are actively seeking to encourage market participants to report trades in Nasdaq securities through their facilities. In order to remain competitive, Nasdaq believes that it must create incentives for market participants to report trades through Nasdaq.

C. Self-Regulatory Organization's Statement on Comments on the Proposed Rule Change Received From Members, Participants, or Others

The Commission received a number of comment letters that referenced SR–NASD–2001–71, a proposed rule change that contained a proposal similar to the proposal contained in this filing but that was withdrawn prior to its implementation. SR–NASD–2001–71 was withdrawn for the specific purpose of allowing interested persons a greater opportunity to comment on the proposal in isolation from other changes to Nasdaq's pricing structure that were filed with SR–NASD–2001–71 and in other contemporaneous filings relating to Nasdaq fees. Accordingly, Nasdaq proposes to respond to any written comments received on the proposed rule change contained herein after the proposed rule change has been published for comment and the comment period has expired. Nasdaq did not solicit or receive written comments on the proposed rule change contained herein.

III. Date of Effectiveness of the Proposed Rule Change and Timing for Commission Action

Within 35 days of the date of publication of this notice in the **Federal Register** or within such longer period (i) as the Commission may designate up to 90 days of such date if it finds such longer period to be appropriate and publishes its reasons for so finding or (ii) as to which the NASD consents, the Commission will:

(A) By order approve such proposed rule change, or

(B) Institute proceedings to determine whether the proposed rule change should be disapproved.

[13] 15 U.S.C. 78*o*–3(b)(5).

[14] 15 U.S.C. 78*o*–3(b)(6).

[15] Securities Exchange Act Release No. 37250 (May 29, 1996), 61 FR 28629 (June 5, 1996) (SR–CBOE–96–23) (quoting Timpinaro v. SEC, 2 F.3d 453, 456 (D.C. Cir. 1993)).

[16] Securities Exchange Act Release No. 44292 (May 11, 2001), 66 FR 27715 (May 18, 2001) (SR–Phlx–2001–49).

IV. Solicitation of Comments

Interested persons are invited to submit written data, views, and arguments concerning the foregoing, including whether the proposed rule change is consistent with the Act. Persons making written submissions should file six copies thereof with the Secretary, Securities and Exchange Commission, 450 Fifth Street, NW., Washington, DC 20549–0609. Copies of the submission, all subsequent amendments, all written statements with respect to the proposed rule change that are filed with the Commission, and all written communications relating to the proposed rule change between the Commission and any person, other than those that may be withheld from the public in accordance with the provisions of 5 U.S.C. 552, will be available for inspection and copying at the Commission's Public Reference Room. Copies of such filing will also be available for inspection and copying at the principal office of the NASD. All submissions should refer to File No. SR–NASD–2002–18 and should be submitted by April 1, 2002.

For the Commission, by the Division of Market Regulation, pursuant to delegated authority.[17]

Jill M. Peterson,

Assistant Secretary.

[FR Doc. 02–5781 Filed 3–8–02; 8:45 am]

BILLING CODE 8010–01–U

SECURITIES AND EXCHANGE COMMISSION

[Release No. 34–45499, File No. SR–NASD–98–26 Amend. No. 12]

Self-Regulatory Organizations; National Association of Securities Dealers, Inc.; Notice of Filing and Order Granting Accelerated Approval to Amendment No. 12 to a Proposed Rule Change Relating to an Extension of the NASD Short Sale Rule and Continued Suspension of Primary Market Maker Standards Set Forth in NASD Rule 4612

March 4, 2002.

Pursuant to section 19(b)(1) of the Securities Exchange Act of 1934 (''Act'')[1] notice is hereby given that on February 28, 2002, the National Association of Securities Dealers, Inc., through its subsidiary, The Nasdaq Stock Market, Inc. (''Nasdaq'') filed with the Securities and Exchange Commission (''Commission'' or ''SEC'') the proposed rule change as described in Items I and II below, which Items have been prepared by Nasdaq. The Commission is publishing this notice to solicit comments on the proposed rule change from interested persons.

I. Self-Regulatory Organization's Statement of the Terms of Substance of the Proposed Rule Change

Nasdaq is proposing to extend the pilot program of the NASD short sale rule (''Rule 3350'') from March 1, 2002 until December 15, 2002. Nasdaq is also seeking to continue the suspension of the effectiveness of the Primary Market Maker (''PMM'') standards currently set forth in NASD Rule 4162 also from March 1, 2002 until December 15, 2002. The text of the proposed rule change is as follows. Additions are italicized; deletions are bracketed.

NASD Rule 3350

* * * * *

(l) This section shall be in effect until *December 15, 2002* [March 1, 2002].

II. Self-Regulatory Organization's Statement of the Purpose of, and Statutory Basis for, the Proposed Rule Change

In its filing with the Commission, Nasdaq included statements concerning the purpose of and basis for the proposed rule change. The text of these statements may be examined at the places specified in Item III below. Nasdaq has prepared summaries, set forth in Sections A, B, and C below, of the most significant aspects of such statements.

A. Background and Description of the NASD's Short Sale Rule

Section 10(a) of the Act gives the Commission plenary authority to regulate short sales of securities registered on a national securities exchange, as needed to protect investors. Although the Commission has regulated short sales since 1938, that regulation has been limited to short sales of exchange-listed securities. In 1992, Nasdaq, believing that short-sale regulation is important to the orderly operation of securities markets, proposed a short sale rule for trading of its National Market securities that incorporates the protections provided by Rule 10a–1 under the Act. On June 29, 1994, the SEC approved Rule 3350 applicable to short sales[2] in Nasdaq National Market (''NNM'') securities on an eighteen-month pilot basis through March 5, 1996.[3] The NASD and the Commission have extended Rule 3350 numerous times, most recently, until March 1, 2002. Rule 3350 employs a ''bid'' test rather than a tick test because Nasdaq trades are not necessarily reported to the tape in chronological order. The Rule prohibits short sales at or below the inside bid when the current inside bid is below the previous inside bid. Nasdaq calculates the inside bid from all market makers in the security (including bids for exchanges trading Nasdaq securities on an unlisted trading privileges basis), and disseminates symbols to denote whether the current inside bid is an ''up-bid'' or a ''down-bid.'' To effect a ''legal'' short sale on a down-bid, the short sale must be executed at a price at least $.01 above the current inside bid. Rule 3350 is in effect from 9:30 a.m. until 4 p.m. each trading day.

To reduce the compliance burdens on its members, Rule 3350 also incorporates seven exemptions contained in Rule 10a–1 under the Act, that are relevant to trading on Nasdaq.[4] For example, in an effort to not constrain the legitimate hedging needs of options market makers, Rule 3350 also contains a limited exception for standardized options market makers. The Rule also contains an exemption for warrant market makers similar to the one available for options market makers.

B. Background of the Primary Market Maker Standards

To ensure that market maker activities that provide liquidity and continuity to the market are not adversely constrained when the Rule is invoked, Rule 3350 provides an exemption for ''qualified'' Nasdaq market makers (*i.e.*, market makers that meet the PMM standards). Presently, NASD Rule 4612 provides

---

[17] 17 CFR 200.30–3(a)(12).

[1] 15 U.S.C. 78s(b)(1).

[2] A short sale is a sale of a security that the seller does not own or any sale that is consummated by the delivery of a security borrowed by, or for the account of, the seller. To determine whether a sale is a short sale members must adhere to the definition of a ''short sale'' contained in Rule 3b–3 under the Act, which is incorporated into Nasdaq's short sale rule by NASD Rule 3350(k)(1).

[3] *See* Securities Exchange Act Release No. 34277 (June 29, 1994), 59 FR 34885 (July 7, 1994) (''Short Sale Rule Approval Order'').

[4] *See* NASD Rule 3350(c)(2)–(8). The Rule also provides that a member not currently registered as a Nasdaq market maker in a security that has acquired the security while acting in the capacity of a block positioner shall be deemed to own such security for the purposes of the Rule notwithstanding that such member may not have a net long position in such security if and to the extent that such member's short position in such security is subject to one or more offsetting positions created in the course of bona fide arbitrage, risk arbitrage, or bona fide hedge activities. In addition, the NASD has recognized that SEC staff interpretations to Rule 10a–1 under the Act dealing with the liquidation of index arbitrage positions and an ''international equalizing exemption'' are equally applicable to the NASD's short sale rule.

that a member registered as a Nasdaq market maker pursuant to NASD Rule 4611 may be deemed a PMM if that member meets certain threshold standards.

Since Rule 3350 has been in effect, there have been three methods used to determine whether a market maker is eligible for the market maker exemption. Specifically, from September 4, 1994 through February 1, 1996, Nasdaq market makers that maintained a quotation in a particular NNM security for 20 consecutive business days were exempt from the Rule for short sales in that security, provided the short sales were made in connection with bona fide market making activity (''the 20-day'' test). From February 1, 1996 until the February 14, 1997, the ''20-day'' test was replaced with a four-part quantitative test known as the PMM standards.[5]

On February 14, 1997, the PMM standards were waived for all NNM securities due to the effects of the SEC's Order Handling Rules and corresponding NASD rule change and system modifications on the operation of the four quantitative standards.[6] For example, among other effects, the requirement that market makers display customer limit orders adversely affected the ability of market makers to satisfy the ''102% Average Spread Standard''. Since that time all market makers have been designated as PMMs.

In March 1998, Nasdaq proposed PMM standards that received substantially negative comments.[7] In light of those comments, Nasdaq staff convened an advisory subcommittee to develop new PMM standards (''Subcommittee'') in August 1998. The Subcommittee met nine times and formulated new PMM standards. NASD/Nasdaq staff requested to meet with the Commission staff and the Subcommittee to receive informal feedback on the new PMM standards. This meeting occurred on December 9, 1998. At the conclusion of the meeting, Commission staff noted the progress made by the Subcommittee and requested time to digest and more carefully analyze the proposed new PMM standards.

On July 29, 1999, members of the Nasdaq staff conducted a conference call with members of the Commission staff to receive feedback on the PMM standards that Nasdaq presented at the December 9, 1998 meeting. During the meeting, the Commission staff requested that Nasdaq modify several of the proposed standards and analyze the impact of those modifications on the primary market maker determination. On September 27, 1999, Nasdaq reported that the NASD Economic Research staff had analyzed data based on the Commission's recommended revisions, and concluded that the Commission's modified standards produced unfavorable results. Nasdaq requested that the Commission comment on the outcome of this test ''as we intend to communicate your comments to the Subcommittee in an effort to resume the process of developing new standards.''[8]

Nasdaq suspended development of PMM standards in late-1999 after the Commission signaled the securities industry that it is considering fundamental changes to Rule 10a–1 under the Act, changes that could affect the manner in which Nasdaq and the other markets regulate short sales. In October 1999, the Commission issued a Concept Release on Short Sales in which it sought comment on, among other things, revising the definition of short sale, extending short sale regulation to non-exchange listed securities, and eliminating short sale regulation altogether. Nasdaq believed that it would be inappropriate for Nasdaq to dramatically alter its regulation of short sales while the Commission is considering fundamentally changing Rule 10a–1 under the Act. At the request of the staff of the Division of Market Regulation, Nasdaq has resumed development of PMM standards and has been working with the Commission staff toward that goal.

C. Proposal To Extend the Short Sale Rule and Suspend the PMM Standards

Nasdaq believes that it is in the best interest of investors to extend the short sale regulation pilot program. When the Commission approved the NASD's short sale rule on a pilot basis, it made specific findings that the Rule was consistent with sections 11A, 15A(b)(6), 15A(b)(9), and 15A(b)(11) of the Act. Specifically, the Commission stated that, ''recognizing the potential for problems associated with short selling, the changing expectations of Nasdaq market participants and the competitive disparity between the exchange markets and the OTC market, the Commission believes that regulation of short selling of Nasdaq National Market securities is consistent with the Act.''[9] In addition, the Commission stated that it ''believes that the NASD's short sale bid-test, including the market maker exemptions, is a reasonable approach to short sale regulation of Nasdaq National Market securities and reflects the realities of its market structure.''[10] Nasdaq believes the benefits that the Commission recognized when it first approved Rule 3350 apply with equal force today.

Similarly, the concerns that caused the Commission to waive the PMM standards in February 1997 continue to exist today. Nasdaq and the Commission agreed to waive the PMM standards for three reasons that were discovered only after the Order Handling Rules were implemented.[11] Through late-1999, Nasdaq worked diligently to address those concerns to the Commission's satisfaction, including convening a special subcommittee on PMM issues, proposing two different sets of PMM standards, and being continuously available and responsive to Commission staff to discuss this issue. Despite these efforts, the Commission and Nasdaq were unable to establish satisfactory PMM standards. At the request of Commission staff, Nasdaq has begun developing PMM standards suitable to today's rapidly changing marketplace. Re-instating the PMM standards set forth in NASD Rule 4612 would be extremely disruptive to the market and harmful to investors.

[5] Under the PMM standards, a market maker was required to satisfy at least two of the following four criteria each month to be eligible for an exemption from the short sale rule: (1) The market maker must be at the best bid or best offer as shown on Nasdaq no less that 35 percent of the time; (2) the market maker must maintain a spread no greater than 102 percent of the average dealer spread; (3) no more than 50 percent of the market maker's quotation updates may occur without being accompanied by a trade execution of at least one unit of trading; or (4) the market maker executes 1½ times its ''proportionate'' volume in the stock. If a PMM did not satisfy the threshold standards after a particular review period, the market maker lost its designation as a PMM (*i.e.*, the ''P'' next to its market maker identification was removed). Market makers could requalify for designation as a PMM by satisfying the threshold standards in the next review period.

[6] *See* Securities Exchange Act Release No. 38294 (February 17, 1997), 62 FR 8289 (February 24, 1997).

[7] *See* Securities Exchange Act Release No. 39189 (March 30, 1998), 63 FR 16841 (April 6, 1998).

[8] *See* Letter, dated September 27, 1999 from John F. Malitzis, Assistant General Counsel, Nasdaq, to Richard Strasser, Assistant Director, Division of Market Regulation, SEC.

[9] *See* Short Sale Rule Approval Order, *supra* note 3.

[10] *Id.*

[11] Implementation of the Order Handling Rules created the following three issues: (1) Many market makers voluntarily chose to display customer limit orders in their quotes although the Limit Order Display Rule did not require it at that time; (2) SOES decrementation for all Nasdaq stocks significantly affected market makers' ability to meet several of the primary market maker standards; and (3) with the inability to meet the existing criteria for a larger number of securities, a market maker may be prevented from registering as a primary market maker in an initial public offering because it fails to meet the 80% primary market maker test contained in Rule 4612(g)(2)(B).

D. Self-Regulatory Organization's Statement on Burden on Competition

Nasdaq believes that the proposed rule change will not result in any burden on competition that is not necessary or appropriate in furtherance of the purposes of the Act.

E. Self-Regulatory Organization's Statement on Comments on the Proposed Rule Change Received From Members, Participants, or Others

Comments were neither solicited nor received.

III. Solicitation of Comments

Interested persons are invited to submit written data, views, and arguments concerning the foregoing, including whether the proposed rule change is consistent with the Act. Persons making written submissions should file six copies thereof with the Secretary, Securities and Exchange Commission, 450 Fifth Street, NW, Washington, DC 20549–0609. Copies of the submission, all subsequent amendments, all written statements with respect to the proposed rule change that are filed with the Commission, and all written communications relating to the proposed rule change between the Commission and any person, other than those that may be withheld from the public in accordance with the provisions of 5 U.S.C. 552, will be available for inspection and copying in the Commission's Public Reference Room. Copies of the filing will also be available for inspection and copying at the principal office of the NASD. All submissions should refer to the file number in the caption above and should be submitted by April 1, 2002.

IV. Commission's Findings and Order Granting Accelerated Approval of the Amendment

After careful consideration, the Commission finds, for the reasons set forth below, that the extension of the Short Sale Rule Pilot and the suspension of the existing PMM standards until December 15, 2002 is consistent with the requirements of the Act and the rules and regulations thereunder. In particular, the extension is consistent with section 15A(b)(6) [12] of the Act, which requires that the NASD's rules be designed, among other things, to remove impediments to and perfect the mechanism of a free and open market and a national market system and to promote just and equitable principles of trade.

The Commission finds that the continuation of the Short Sale Rule Pilot and the continued suspension of the PMM standards will maintain the status quo while the Commission is considering amending Rule 10a–1 under the Act. This extension of the pilot and continued suspension of the PMM standards is subject to modification or revocation should the Commission amend Rule 10a–1 under the Act in a manner as to deem the extension or suspension unnecessary or in conflict with any adopted amendments.[13]

The Commission finds good cause for approving the extension of the Short Sale Rule Pilot and the suspension of existing PMM standards prior to the 30th day after the date of publication of notice of the filing in the **Federal Register**. It could disrupt the Nasdaq market and confuse market participants to reintroduce the previous PMM standards while new PMM standards are being developed, and while the Commission considers amending Rule 10a–1 under the Act.

It is therefore ordered, pursuant to section 19(b)(2) of the Act,[14] that Amendment No. 12 to the proposed rule change, SR–NASD–98–26, which extends the NASD Short Sale Rule Pilot and suspends the PMM standards through December 15, 2002, is approved on an accelerated basis.[15]

For the Commission, by the Division of Market Regulation, pursuant to delegated authority.[16]

Jill M. Peterson,

Assistant Secretary.

[FR Doc. 02–5782 Filed 3–8–02; 8:45 am]

BILLING CODE 8010–01–U

[12] 15 U.S.C. 78*o*–3(b)(6).

[13] Absent an exemption, Rule 10a–1 under the Act would apply to Nasdaq on Commission approval of its exchange registration.

[14] 15 U.S.C. 78s(b)(2).

[15] In approving Amendment No. 12, the Commission has considered its impact on efficiency, competition, and capital formation. 15 U.S.C. 78c(f).

[16] 17 CFR 200.30–3(a)(12).

SECURITIES AND EXCHANGE COMMISSION

[Release No. 34–45503; File No. SR–NASD–2002–29]

Self-Regulatory Organizations; Notice of Filing and Immediate Effectiveness of Proposed Rule Change by the National Association of Securities Dealers, Inc. To Extend a Pilot Program Making Available Certain Nasdaq Services and Facilities Until 6:30 p.m. Eastern Time

March 5, 2002.

Pursuant to Section 19(b)(1) of the Securities Exchange Act of 1934 (''Act''),[1] and Rule 19b–4 thereunder,[2] notice is hereby given that on March 4, 2002, the National Association of Securities Dealers, Inc. (''NASD'' or ''Association''), through its subsidiary, The Nasdaq Stock Market, Inc. (''Nasdaq'') filed with the Securities and Exchange Commission (''Commission'') the proposed rule change as described in Items I, II and III below, which Items have been prepared by Nasdaq. Nasdaq filed the proposal pursuant to Section 19(b)(3)(A) of the Act,[3] and Rule 19b–4(f)(6) thereunder,[4] which renders the proposal effective upon filing with the Commission.[5] The Commission is publishing this notice to solicit comments on the proposed rule change from interested persons.

I. Self-Regulatory Organization's Statement of the Terms of Substance of the Proposed Rule Change

Nasdaq proposes to extend through September 1, 2002 its pilot program making available several Nasdaq services and facilities until 6:30 P.M. Eastern Time. No substantive changes are being made to the pilot program, other than extending the operation of the pilot program through September 1, 2002. The text of the proposed rule change is available at the Association and at the Commission.

II. Self-Regulatory Organization's Statement of the Purpose of, and Statutory Basis for, the Proposed Rule Change

In its filing with the Commission, Nasdaq included statements concerning the purpose of and basis for its proposal and discussed any comments it received regarding the proposal. The text of these

[1] 15 U.S.C. 78s(b)(1).

[2] 17 CFR 240.19b–4.

[3] 15 U.S.C. 78s(b)(3)(A).

[4] 17 CFR 240.19b–4(f)(6).

[5] Nasdaq asked the Commission to waive the 5-day pre-filing notice requirement and the 30-day operative delay. *See* Rule 19b–4(f)(6)(iii). 17 CFR 240.19b–4(f)(6)(iii).

statements may be examined at the places specified in Item IV below. Nasdaq has prepared summaries, set forth in Sections A, B and C below, of the most significant aspects of such statements.

A. Self-Regulatory Organization's Statement of the Purpose of, and Statutory Basis for, the Proposed Rule Change

1. Purpose

Nasdaq proposes to extend through September 1, 2002 its current pilot program that makes available certain Nasdaq systems and facilities until 6:30 P.M. Eastern Time. The pilot will continue to operate under the same terms and conditions as set forth in the Commission's original approval order, including mandating 90-second trade reporting until 6:30 P.M. Eastern Time.[6]

2. Statutory Basis

Nasdaq believes that the proposal is consistent with the provisions of Section 15A(b)(6) of the Act[7] in that it is designed to prevent fraudulent and manipulative acts and practices, to promote just and equitable principles of trade, to foster cooperation and coordination with persons engaged in regulating, clearing, settling, and processing information with respect to, and facilitating transactions in securities.

B. Self-Regulatory Organization's Statement on Burden on Competition

Nasdaq does not believe that the proposed rule change will result in any burden on competition that is not necessary or appropriate in furtherance of the purposes of the Act.

C. Self-Regulatory Organization's Statement on Comments on the Proposed Rule Change Received From Members, Participants or Others

Written comments were neither solicited nor received.

III. Date of Effectiveness of the Proposed Rule Change and Timing for Commission Action

Because the foregoing proposed rule change does not:

(i) Significantly affect the protection of investors or the public interest;

(ii) Impose any significant burden on competition; and

(iii) Become operative for 30 days from the date on which it was filed, or such shorter time as the Commission may designate, it has become effective pursuant to Section 19(b)(3)(A) of the Act[8] and Rule 19b–4(f)(6) thereunder.[9] At any time within 60 days of the filing of the proposed rule change, the Commission may summarily abrogate such rule change if it appears to the Commission that such action is necessary or appropriate in the public interest, for the protection of investors, or otherwise in furtherance of the purposes of the Act.

Nasdaq has requested that the Commission waive the 5-day pre-filing notice requirement and accelerate the operative date. The Commission finds good cause to waive the 5-day pre-filing notice requirement and the 30-day operative waiting period, because such designation is consistent with the protection of investors and the public interest. Acceleration of the operative date will allow the pilot program to continue without interruption through September 1, 2002. For these reasons, the Commission finds good cause to waive both the 5-day pre-filing notice requirement and the 30-day operative waiting period.[10]

IV. Solicitation of Comments

Interested persons are invited to submit written data, views, and arguments concerning the foregoing, including whether the proposal is consistent with the Act. Persons making written submissions should file six copies thereof with the Secretary, Securities and Exchange Commission, 450 Fifth Street, NW., Washington, DC 20549-0609. Copies of the submission, all subsequent amendments, all written statements with respect to the proposed rule change that are filed with the Commission, and all written communications relating to the proposed rule change between the Commission and any person, other than those that may be withheld from the public in accordance with the provisions of 5 U.S.C. 552, will be available for inspection and copying in the Commission's Public Reference Room. Copies of such filing will also be available for inspection and copying at the principal office of the Association. All submissions should refer to file number SR–NASD–2002–29 and should be submitted by April 1, 2002.

For the Commission, by the Division of Market Regulation, pursuant to delegated authority.[11]

Jill M. Peterson,

Assistant Secretary.

[FR Doc. 02–5783 Filed 3–8–02; 8:45 am]

BILLING CODE 8010–01–P

[6] *See* Securities Exchange Act Release No. 42003 (October 13, 1999), 64 FR 56554 (October 20, 1999) (order approving after-hours trading pilot).

[7] 15 U.S.C. 78o–3(b)(6).

[8] 15 U.S.C. 78s(b)(3)(A).

[9] 17 CFR 240.19b–4(f)(6).

[10] For purposes only of accelerating the operative date of this proposal, the Commission has considered the proposed rule's impact on efficiency, competition, and capital formation. 15 U.S.C. 78c(f).

[11] 17 CFR 200.30–3(a)(12).

SECURITIES AND EXCHANGE COMMISSION

[Release No. 34–45508; File No. SR–NASD–00–76]

Self-Regulatory Organizations; Notice of Filing of Amendment Nos. 2 and 3 to a Proposed Rule Change by the National Association of Securities Dealers, Inc. Relating to Locked and Crossed Markets That Occur at or Prior to the Market Open

March 5, 2002.

Pursuant to section 19(b)(1) of the Securities Exchange Act of 1934 (''Exchange Act''),[1] and Rule 19b–4 thereunder,[2] notice is hereby given that the National Association of Securities Dealers, Inc. (''NASD''), through its subsidiary, the Nasdaq Stock Market, Inc. (''Nasdaq''), filed with the Securities and Exchange Commission (''Commission'' or ''SEC'') Amendment Nos. 2 and 3 to the proposed rule change as described in Items I, II, and III below, which Items have been prepared by Nasdaq. The proposed rule change and Amendment No. 1 were published for comment in the **Federal Register** on February 7, 2001.[3] The Commission received seven comment letters regarding the proposal.[4] Nasdaq

[1] 15 U.S.C. 78s(b)(1).

[2] 17 CFR 240.19b–4.

[3] *See* Securities Exchange Act Release No. 43913 (January 31, 2001), 66 FR 9394 (''February 2001 Release'').

[4] *See* letter from Mark R. Grewe, Managing Director, NDB Capital Markets, L.P., to Jonathan G. Katz, Secretary, Commission, dated February 27, 2001 (''NDB Letter''); letter from Martin Cunningham, Senior Vice President Trading, Schwab Capital Markets L.P. (''Schwab''), to Jonathan G. Katz, Secretary, Commission, dated February 28, 2001 (''Schwab Letter''); letter from Richard B. Levin, Assistant General Counsel and Regulatory Affairs Officer, Knight Securities, L.P. (''Knight''), to the Commission, dated March 1, 2001 (''Knight Letter''); letter from Kim Bang, President, Bloomberg Tradebook LLC (''Bloomberg''), to the Commission, dated March 15, 2001 (''Bloomberg Letter''); letter from Timothy G. Grazioso, Subcommittee Chairman, Trading Issues Committee, Security Traders Association (''STA''), Michael T. Bird, Chairman, Trading Issues Committee, STA, and Geoffrey W. Cloud, Counsel, Trading Issues Committee, STA, to Jonathan G. Katz, Secretary, Commission, dated March 13, 2001 (''STA Letter''); letter from Kevin J.P. O'Hara, General Counsel, Archipelago, L.L.C. (''Archipelago'') to Jonathan G. Katz, Secretary, Commission, dated April 3, 2001 (''Archipelago

has responded to the commenters in Amendment Nos. 2 and 3 to the proposal, which Nasdaq filed with the Commission on August 13, 2001,[5] and February 21, 2002, respectively.[6] The Commission is publishing this notice to solicit comments on Amendment Nos. 2 and 3 to the proposed rule change from interested persons.

I. Self-Regulatory Organization's Statement of the Terms of Substance of the Proposed Rule Change

In its original proposal, Nasdaq proposed to amend NASD Rule 4613(e)(1)(C), ''Locked and Crossed Markets,'' to revise the use of Trade-or-Move Messages during locked and crossed market conditions that occur prior to the market's opening and to add provisions relating to the use of Trade-or-Move Messages prior to the market's close. In response to comment letters filed with the Commission and based upon input from a special subcommittee of Nasdaq's Quality of Markets Committee, Nasdaq proposes to amend its original proposal to: (1) Require ECNs to send Trade-or-Move Messages prior to entering locking/crossing quotes and require market makers to send Trade-or-Move Messages after entering locking/crossing quotes; (2) reduce the time to respond to a Trade-or-Move Message to 10 seconds; (3) provide a 10,000-share minimum share requirement for Trade-or-Move Messages for Nasdaq 100 and S&P 400 issues; (4) prohibit all market participants from entering locking/crossing quotes between 9:29:30 a.m. and 9:29:59 a.m.; and (5) delete provisions imposing Trade-or-Move requirements between 3:50 p.m. and 4:00 p.m.

Proposed changes to the original proposal, as published in the February 2001 Release, appear below. Proposed additions are in italics; proposed deletions are in [brackets].

Rule 4613—Character of Quotations

(a)–(d) No change.

(e) Locked and Crossed Markets:

(1) A market maker shall not, except under extraordinary circumstances, enter or maintain quotations in Nasdaq during normal business hours if:

(A) No change.

(B) No change.

(C) Obligations Regarding Locked/Crossed Market Conditions Prior to Market Opening [And Prior to Market Closing]—

(i) No change.

(i) Locked/Crossed Market Between 9:20 and 9:29:59 a.m.—

(a) Before *an ECN* [market maker] enters a quote that would lock or cross the market between 9:20 and 9:29:29 a.m. Eastern Time, the *ECN* [market maker] must first send through SelectNet to the market maker *or ECN* whose quote it would lock or cross a Trade-or-Move Message that is at *or superior to* the receiving market maker's *or ECN's* quoted price [and that is for at least 10,000 shares (if multiple market makers would be locked/crossed, each one must receive a Trade-or-Move Message and the aggregate size of all such messages must be at least 10,000 shares); provided, however, that if a market participant is representing an agency order (as defined in subparagraph (vi) of this rule), the market participant shall be required to send a Trade-or-Move Message in an amount equal to the agency order, even if that order is less than 10,000 shares. A [market maker]. *An ECN* that sends a Trade-or-Move Message during these periods must then wait at least [15]*10* seconds before entering a quote that would lock or cross the market.

(b) If a market maker enters a quote that would lock or cross the market between 9:20 and 9:29:29 a.m. Eastern Time, the market maker must then immediately send through SelectNet to the market maker or ECN whose quote it would lock or cross a Trade-or-Move Message that is at or superior to the receiving market maker's or ECN's quoted price.

(c) Market participants shall be prohibited from entering a quote that would lock or cross the market between 9:29:30 and 9:29:59.

(ii)*(a) In the case of securities included in the Nasdaq 100 Index or the S&P 400 Index, a Trade-or-Move Message must be* [and that is] for at least 10,000 shares (if multiple market makers would be locked/crossed, each one must receive a Trade-or-Move Message and the aggregate size of all such messages must be at least 10,000 shares); provided, however, that if a market participant is representing an agency order (as defined in subparagraph (vi) of this rule), the market participant shall be required to send a Trade-or-Move Message(s) in an amount equal to the agency order, even if that order is less than 10,000 shares.

(b) In the case of all other securities, a Trade-or-Move Message must be for at least 5,000 shares (if multiple market makers would be locked/crossed, each one must receive a Trade-or-Move Message and the aggregate size of all such messages must be at least 5,000 shares); provided, however, that if a market participant is representing an agency order (as defined in subparagraph (vi) of this rule), the market participant shall be required to send a Trade-or-Move Message(s) in an amount equal to the agency order, even if that order is less than 5,000 shares.

[Locked/Crossed Market Between 3:50 and 3:59:59 p.m.—Before a market maker enters a quote that would lock or cross the market between 3:50 and 3:59:59 p.m. Eastern Time, the market maker must first send through SelectNet to the market maker whose quote it would lock or cross, a Trade-or-Move Message that is at the receiving market maker's quoted price and that is for at least 10,000 shares (if multiple market makers would be locked/crossed, each one must receive a Trade-or-Move Message and the aggregate size of all such messages must be at least 10,000 shares); provided, however, that if a market participant is representing an agency order (as defined in subparagraph (vi) of this rule), the market participant shall be required to send a Trade-or-Move Message(s) in an amount equal to the agency order, even if that order is less than 10,000 shares. A market maker that sends a Trade-or-Move Message during this period must then wait at least 15 seconds before entering a quote that would lock or cross the market.]

(iv) A market maker that receives a Trade-or-Move Message must, within [15] *10* seconds of receiving such message, either fill the incoming Trade-or-Move Message for the full size of the message, or [, consistent with its Firm Quote obligations,] move its bid down

Letter''); and letter from William O'Brien, Senior Vice President & General Counsel, The BRUT ECN, L.L.C., (''BRUT'') to the Commission, dated April 17, 2001 (''BRUT Letter'').

[5] *See* letter (with attachment) from Eugene A. Lopez, Senior Vice President, Nasdaq, to Belinda Blaine, Associate Director, Division of Market Regulation (''Division''), Commission, dated August 10, 2001 (''Amendment No. 2''). In Amendment No. 2, Nasdaq responds to the commenters and proposes to revise its original proposal to: (1) Require electronic communications networks (''ECNs'') to send Trade-or-Move Messages prior to entering locking/crossing quotes and require market makers to send Trade-or-Move Messages after entering locking/crossing quotes; (2) reduce the time to respond to a Trade-or-Move Message to 10 seconds; (3) provide a 10,000-share minimum share requirement for Trade-or-Move Messages for Nasdaq 100 and S&P 400 issues; (4) prohibit all market participants from entering locking/crossing quotes between 9:29:30 a.m. and 9:29:59 a.m.; and (5) delete provisions imposing Trade-or-Move requirements between 3:50 p.m. and 4 p.m.

[6] *See* letter from Jeffrey S. Davis, Nasdaq, to John Polise, Senior Special Counsel, Division, Commission, dated February 21, 2002 (''Amendment No. 3''). In Amendment No. 3, Nasdaq responds to comments from BRUT and clarifies a misstatement in Amendment No. 2. Specifically, Amendment No. 3 states that the requirement that ECNs send Trade-or-Move Messages prior to entering locking or crossing quotes applies to all orders that ECNs receive and is not limited to agency orders, as stated incorrectly in Amendment No. 2.

(offer up) by a quotation increment that restores or maintains an unlocked/uncrossed market.

(v) A market maker that sends a Trade-or-Move Message pursuant to subparagraphs (e)(1)(C)(i)[,] *or* (ii)[, or (iii)] of this rule must append to the message a Nasdaq-provided symbol indicating that it is a Trade-or-Move Message.

(vi) No Change.

(2) No Change.

(3) *Except as indicated in subsection (1)(C)(ii)*, [F]for purposes of this rule, the term ''market maker'' shall include:

(A)–(D) No Change.

II. Self-Regulatory Organization's Statement of the Purpose of, and Statutory Basis for, the Proposed Rule Change

In its filing with the Commission, Nasdaq included statements concerning the purpose of, and basis for, the proposed rule change, and discussed any comments it received on the proposed rule change. The text of these statements may be examined at the places specified in Item IV below. Nasdaq has prepared summaries, set forth in Sections A, B, and C below, of the most significant aspects of such statements.

A. Self-Regulatory Organization's Statement of the Purpose of, and Statutory Basis for, the Proposed Rule Change

1. Purpose

(a) Amendment No. 2.

Background

In its original rule proposal, Nasdaq proposed amendments to NASD Rule 4613(e)(1)(C) that would alter the obligations of market makers and ECNs during locked and crossed markets that occur prior to the market's open and also prior to the close. Specifically, Nasdaq originally proposed to: (1) Extend the application of NASD Rule 4613(e)(1)(C)(ii) regarding locked/crossed markets before the open to the period prior to the close; (2) require market makers and ECNs that send a Trade-or-Move Message to do so at least 15 seconds before entering a locking/crossing quote rather than after entering a locking/crossing quote, as the rule currently requires; (3) increase from 5,000 to 10,000 the minimum number of shares that must accompany a non-agency Trade-or-Move Message; and (4) reduce from 30 seconds to 15 seconds the amount of time within which the recipient of a Trade-or-Move Message must properly respond.

The Commission received seven comment letters regarding the original proposal.[7] Nasdaq notes that the commenters, who are among the most active participants in the Nasdaq market, expressed materially different views regarding Nasdaq's proposal. In response to the comment letters, Nasdaq's Quality of Markets Committee formed a subcommittee (''Subcommittee'') to address the concerns raised by the commenters. The Subcommittee was comprised of all of the commenters, as well as members representing other constituencies within the Nasdaq market making community.

At its first meeting, the Subcommittee spent two hours discussing the operation of the Trade-or-Move rule during the pre-opening period. This meeting, like the comment letters, generated significant disagreement regarding the best approach to improving the operation of the rule. Following that meeting, a straw poll of the Subcommittee on four aspects of Trade-or-Move during the pre-opening period revealed no clear majority supporting any proposal on any aspect of NASD Rule 4613(e)(1)(C).

After the first Subcommittee meeting, members of the staff of Nasdaq Transaction Services, Economic Research, Regulation and Controls, Technology Services, and the Nasdaq Office of General Counsel met several times in different groupings to develop a recommendation based upon the Subcommittee deliberations. Nasdaq staff presented its recommendations at the second Subcommittee meeting, where the Subcommittee members spent nearly two hours discussing the pre-opening period and another half-hour discussing the pre-closing period.

Response to Comments

Nasdaq is aware that there remain meaningful, legitimate disagreements within the market making community regarding the best solution to locked and crossed markets that occur on Nasdaq. Nasdaq's goal is to incrementally improve and simplify the operation of and compliance with the Trade-or-Move rule, rather than to pursue an impossible ideal of solving every Trade-or-Move problem experienced by every market participant. The recommendations described in greater detail below are designed to accomplish that goal, as well as to promote price discovery and the maintenance of an orderly market.

Pre-Opening

An orderly opening is critical to Nasdaq and to investors.[8] Nasdaq notes that a sizable portion of the volume in Nasdaq occurs at or around the market's opening. According to Nasdaq, many marker makers guarantee their customers an execution at the opening inside bid or offer price, or in some cases the midpoint of (or other range between) the opening inside bid/inside offer. Thus, the inside market at the opening affects the price at which a sizable number of orders from individual investors in Nasdaq stocks are filled. Moreover, the prices of certain options contracts, indexes, and derivative instruments often are set based on the opening prints in Nasdaq. Accordingly, it is of utmost importance that the market open in an orderly fashion.

As discussed more fully below, Amendment No. 2 revises the proposal to eliminate the use of Trade-or-Move Messages prior to the market's close. In addition, Amendment No. 2 modifies the following aspects of the original proposal with regard to the way that Trade-or-Move operates prior to the opening: (1) The sequence of Trade-or-Move Messages; (2) the time within which to respond to a Trade-or-Move Message; (3) the number of shares accompanying a Trade-or-Move Message; and (4) the period between 9:29:30 a.m. and 9:29:59 a.m.

Sequence of Messages: Under current NASD Rule 4613(e)(1)(C), a market participant that enters a locking or crossing quote between 9:20 and 9:29:59 a.m. is then required to send a message with an appended Trade-or-Move designator to the party or parties it is locking/crossing. Nasdaq adopted the Trade-or-Move requirements because it believed that requiring market participants to lock/cross the market prior to sending a Trade-or-Move Message would reduce the frequency and severity of pre-opening locked and crossed markets by providing more informative quotation information and facilitating price discovery.

In its original proposal, Nasdaq proposed to revise NASD Rule 4613(e)(1)(C) to require all market participants to send Trade-or-Move Messages before rather than after entering a locking or crossing quotation during the applicable periods. Nasdaq believed that switching the sequence of messages in this way would further reduce the instances of locked and crossed markets in Nasdaq by

[7] *See* note 4, *supra.*

[8] *See* Arthur Levitt, Chairman, Commission, Remarks before the Securities Industry Association, Boca Raton, Florida (November 4, 1999).

preventing them from occurring in the first instance. Nasdaq believed that the benefits of preventing the occurrence of locked/crossed markets would outweigh the concomitant loss of price discovery provided by the entry of locking or crossing quotes.

Two commenters opposed the proposed change of sequence, claiming that the current sequence results in a one-step process that can be readily programmed into firms' automated trading systems,[9] while the opposite sequence would result in a two-step process that would be difficult to program. According to these commenters, the programming of automated systems improves firms' compliance with the Trade-or-Move requirements and their ability to surveil for compliance internally. These commenters also claimed that the change of sequence would result in more locked or crossed markets, not fewer, as Nasdaq believed.

Two commenters argued that reversing the sequence of messaging would unduly hinder price discovery because the recipient of a Trade-or-Move Message would not know the price to which it would be required to move its quote to maintain an unlocked/uncrossed market.[10] They further argued that decimalization would exacerbate this problem by permitting the recipients of Trade-or-Move Messages to move their quotes in penny increments rather than in sixteenths. Nasdaq maintains that these arguments are based upon the incorrect assumption that market participants can send Trade-or-Move Messages only to the recipient's quoted price (*i.e.,* to lock the market). In fact, a party sending a Trade-or-Move Message may send the Trade-or-Move Message at the recipient's quoted price *or at a superior price.*[11] In that case, the recipient would be required to trade in full or to move its quote beyond the superior price to maintain an unlocked and uncrossed market.

Two other commenters, both operators of ECNs, supported the proposed change of sequence.[12] One commenter argued that the current rule has a disproportionately negative effect on ECNs because it requires them to stand willing to trade twice for every Trade-or-Move Message they send: once with the participant to which it routes the message, and again with any participant that attempts to access its quote.

Nasdaq notes that because ECNs choose not to accumulate proprietary positions, they are unwilling to accept the risk of double execution. Nasdaq states that while a neutral application of the Trade-or-Move requirements may affect market participants differently, that result stems from the ECNs' voluntary selection of a particular business model and access methodology rather than from any action of Nasdaq. Nasdaq also notes that market makers risk similar double liability from internalization and orders from non-Nasdaq means of access. Nasdaq maintains that its decision to switch the message sequence, like its decision to adopt the existing Trade-or-Move requirements, was based upon Nasdaq's assessment of the benefit of the Trade-or-Move requirements to the entire market rather than their impact on particular market participants or business models.

Nonetheless, based upon the comments received, Nasdaq has decided to amend its proposal to permit the sequence of messaging to differ by market participant business model. Amendment No. 2 will revise the proposal to require ECNs to send Trade-or-Move Messages before entering locking or crossing quotes. Market makers will enter a locking or crossing quote and then immediately send a Trade-or-Move Message.[13] Nasdaq believes that the proposed change has the dual benefit of permitting ECNs to participate more effectively in the pre-opening period and also permitting market makers to retain their current automated systems. It also preserves the benefits that Nasdaq sought to achieve when it first implemented the Trade-or-Move requirements, namely increased price discovery and decreased gamesmanship surrounding the occurrence and resolution of locked and crossed markets. Nasdaq believes that this approach will incrementally improve the operation of NASD Rule 4613(e)(1)(C).[14]

Response Time: Under current NASD Rule 4613(e)(1)(C), the recipient of a Trade-or-Move Message must respond properly to the message within 30 seconds. In the original proposal, Nasdaq reduced the response time to 15 seconds to reduce the duration of locked/crossed markets that occur. Nasdaq believes that markets have become materially faster and that a 30-second delay in price discovery is impractical under the current, rapid conditions. The commenters unanimously agreed that a 30-second response time is too long and that 15 seconds is more appropriate.[15] In fact, two commenters suggested reducing the response time to five seconds.[16]

Nasdaq is reluctant to reduce the response time to five seconds because that would impose a great burden on firms that lack automated systems. Nasdaq is also concerned that the operation and surveillance of a five-second rule could be compromised by potential delays in network communications between Nasdaq's systems and firms' systems.

To balance Nasdaq's desire to respond to the increased speed of markets as well as the potential burden imposed on non-automated firms, Nasdaq proposes to reduce to 10 seconds the time permitted to respond to a Trade-or-Move Message. Although this is a relatively brief period for non-automated participants, Nasdaq believes that firms that choose to participate in the pre-open must vigilantly monitor their quotes. As explained in greater detail below, the 10-second period corresponds to the minimum life of a SelectNet order, thereby allowing ECNs to avoid dual liability by canceling a Trade-or-Move Message when entering a locking or crossing quote.

Number of Shares: Under current NASD Rule 4613(e)(1)(C), the aggregate size of the Trade-or-Move Message must be at least 5,000 shares (*i.e.,* the market participant must send a total of 5,000 shares to all parties it is locking/crossing) in the case of a proprietary quote, or the actual size of an agency order if that is the basis for the locking/crossing quote. Under the original proposal, Nasdaq sought to raise the minimum Trade-or-Move Message share requirement to 10,000 shares or the

[9] *See* Schwab Letter and NDB Letter, *supra* note 4.

[10] *See* Schwab Letter and NDB Letter, *supra* note 4.

[11] Although Nasdaq announced this interpretation of NASD Rule 4613(e) in NASD Notice to Members 2000–29, Nasdaq notes that there appears to be some confusion concerning this point among market makers. Accordingly, Nasdaq is adding language to the current proposal to further clarify this point.

[12] *See* Archipelago Letter and Bloomberg Letter, *supra* note 4.

[13] ''Immediate'' issuance of a Trade-or-Move Message will be understood to mean instantaneous in the case of automated systems and not exceeding a different, specified period where manual processes are utilized.

[14] The STA also supported changing the sequence of messages, contending that doing so would reduce the instances of locked and crossed markets in Nasdaq. Based upon the STA's comments and upon Nasdaq's own desire to reduce the instances of locked/crossed markets, Nasdaq also considered permitting each market participant to choose the sequence of messages that it preferred. After careful analysis, Nasdaq concluded that this approach would create confusion in the marketplace and hinder Nasdaq's ability to surveil for compliance with the Trade-or-Move requirements.

[15] *See* Bloomberg Letter; Archipelago Letter; Schwab Letter; and NDB Letter, *supra* note 4.

[16] *See* STA Letter and Knight Letter, *supra* note 4.

actual size of an agency order. Nasdaq believes that a market participant or its customer should not be able to lock or cross the market in the 10 minutes prior to the opening with a de minimus number of shares. Rather, Nasdaq believes that a market participant must be willing to risk significant capital and to trade a significant amount if it wishes to lock or cross the market during one of the most critical points in the trading day.

Several commenters supported the proposed increase and agreed with the rationale behind it.[17] In fact, the STA suggested that, in certain circumstances, the minimum Trade-or-Move Message share size should be 25,000 shares rather than 10,000 shares. One commenter stated that the requirement should remain at 5,000 shares due, in part, to what the commenter believes is non-compliance with the Trade-or-Move requirements by certain regional markets and NASD members.[18]

On the other hand, one commenter claimed that the 10,000-share requirement discriminates unfairly against ECNs and effectively prevents them from participating in the pre-opening.[19] The commenter suggested that Nasdaq address this issue by permitting ECNs to withhold from a Trade-or-Move Message a portion of an agency order rather than requiring the ECN to append the entire amount of the order to the Trade-or-Move Message it wishes to send. The ECN would then use the shares withheld to enter a locking or crossing quote.

Nasdaq disagrees with this argument. Contrary to the commenter's assertions, the minimum share requirement and agency exception each apply evenly to all market makers and ECNs, and also to their respective customers. The proposal simply prohibits any market participant from locking or crossing the market on a proprietary basis—regardless of the conduit through which it enters an order into the market—for less than the minimum number of shares. In fact, to do as the commenter suggests and permit ECNs to withhold a portion of their agency orders would itself create disparity between market makers and ECNs. Such an approach would be inconsistent with Nasdaq's view that, to the greatest extent possible, the lock/crossed rule should apply equally to all market participants.

Nasdaq also disagrees that the current rule operates to exclude ECNs from the pre-opening period, as evidenced by several ECNs' current participation. Moreover, Nasdaq believes that the modifications described above will ameliorate the ECNs' concerns. Specifically, Nasdaq believes that allowing ECNs to send a Trade-or-Move Message before locking/crossing the market and reducing the response time to 10 seconds should virtually eliminate the risk to an ECN of assuming a proprietary position. For example, Nasdaq notes that an ECN could send Trade-or-Move Message for the actual size of an agency order and wait 10 seconds, the minimum life of a SelectNet order. Assuming that the ECN receives no reply, it could then cancel the SelectNet order and enter the full size of its agency order as a locking/crossing quote.

Nonetheless, in light of the comments received, Nasdaq has determined to modify the proposal as follows: proprietary orders with Trade-or-Move Messages must be accompanied by a minimum of 10,000 shares in the case of Nasdaq 100 and S&P 400 issues, and 5,000 shares for all other issues. The ''agency exception'' contained in current NASD Rule 4613(e)(1)(C) will continue to operate as it does today. Nasdaq believes that Nasdaq 100 and S&P 400 issues are marked by higher liquidity and faster trading and, therefore, merit a more stringent requirement to create a locked or crossed market. Nasdaq believes that this proposal proportionately increases the economic significance of entering a locking/crossing quotation for stocks that are widely followed and for which a locked/crossed market would have the greatest impact.

Limited Prohibition On Entry Of Locking/Crossing Quotes: Based upon the recommendation of the Subcommittee, which was comprised of the commenters and additional members of the Quality of Markets Committee, Nasdaq proposes that market participants be prohibited by rule from entering a locking or crossing quote between 9:29:30 and 9:29:59. During that period, all market participants will be permitted to send Trade-or-Move Messages for the required number of shares to parties that they would lock or cross if permitted to enter such locking/crossing quotes. Market participants that receive Trade-or-Move Messages during that time period will be obligated to respond properly by trading in full or moving their quote within the appropriate response time.

Nasdaq believes that a prohibition on the entry of locking/crossing quotes immediately prior to the market opening, in conjunction with the continued obligation to respond properly to Trade-or-Move Messages, will facilitate the resolution of locks and crosses that exist at 9:29:30. Further, Nasdaq believes that the potential benefits to all market participants of a more orderly opening outweigh the limited loss of price discovery that will result from suppressing locking and crossing quotes during this brief but critical period.

Pre-Closing

NASD Rule 4613(e)(1)(C) does not currently apply during normal business hours. Based upon the positive effect that the Trade-or-Move requirements have had on resolving potential locked and crossed markets at and immediately before the market opening, Nasdaq originally proposed to expand the application of NASD Rule 4613(e)(1)(C) to include the 10-minute period preceding the market close (3:50 p.m. to 3:59:59 p.m.). Like the opening, the closing is a critical period characterized by volatile, rapid, and heavy trading. The closing price is a benchmark for numerous transactions and could be affected dramatically by the existence of locks and crosses.

In its original proposal, Nasdaq proposed that the Trade-or-Move Messages used prior to the close would operate in the same manner as currently proposed for Trade-or-Move Messages used prior to the opening, with one exception. Prior to the market's opening, the market participant receiving a Trade-or-Move Message has no liability under the NASD's firm quote rule (NASD Rule 4613(b)) or under the Commission's firm quote rule (Exchange Act Rule 11aAc–1). Thus, a market maker is permitted to move its quote without trading upon the receipt of what, during market hours, would be a SelectNet ''liability'' order. Prior to the close, however, a Trade-or-Move Message would be considered a liability order. Therefore, unlike during the earlier period, a market participant that received a Trade-or-Move Message prior to the close could move its quote or trade with just a portion of the Trade-or-Move Message only if doing so would be consistent with its firm quote obligations under the NASD and SEC rules.

The commenters argued overwhelmingly that applying the Trade-or-Move requirements before the close would be unnecessary or would cause more problems than they would solve. Several commenters argued that the implementation of Nasdaq's National Market Execution System (''SuperSOES'') would obviate the need for supplemental locked and crossed

[17] *See* NDB Letter and Schwab Letter, *supra* note 4.

[18] *See* Knight Letter, *supra* note 4.

[19] *See* Bloomberg Letter, *supra* note 4.

markets restrictions or, at the very least, that Nasdaq should monitor the implementation of SuperSOES to determine whether or not this claim is accurate.[20] Another commenter noted that the proposal fails to account for economic inefficiencies that exist prior to the close.[21] No commenter expressed support for the proposal to implement Trade-or-Move requirements prior to the market close.

In light of the comments received and the implementation of SuperSOES, Nasdaq has decided to withdraw its proposal to expand the application of NASD Rule 4613(e)(1)(C) to the period prior to the closing. Nasdaq will monitor the effect of SuperSOES at the close and will, at a later date, reevaluate whether applying the Trade-or-Move requirements at the close would materially reduce the instances and duration of locked and crossed markets in Nasdaq.

(b) Amendment No. 3.

One commenter suggested that Nasdaq revise the Trade-or-Move requirements to provide that, for purposes of the Trade-or-Move rule, all ECN orders be treated as agency orders.[22] The commenter asserted that the change was necessary because an ECN could incur principal liability when routing a Trade-or-Move Message where the underlying subscriber order was for a size smaller than the required minimum message size. The commenter maintained that the proposal would materially increase the principal liability risk to ECNs by doubling the minimum Trade-or-Move Message size requirement from 5,000 shares to 10,000 shares.

In response, Nasdaq asserts that permitting market makers to transform their orders into agency orders by sending them to an ECN would undermine the progress that the Trade-or-Move requirements have made towards eliminating locked and crossed markets in Nasdaq.[23] In addition, Nasdaq maintains that the benefit to the overall market of raising the minimum Trade-or-Move Message size requirement for certain stocks outweighs the risk the commenter perceives. Nasdaq notes that under the proposal, as amended, the 10,000-share Trade-or-Move Message requirement applies only to the most active, liquid stocks in the market, and that a smooth opening for these stocks is critical to investors.[24] Nasdaq also states that some ECNs have implemented systems to differentiate between agency and principal order flow from market makers.[25]

2. Statutory Basis

Nasdaq believes that the proposed rule change is consistent with the provisions of section 15A(b)(6) and section 11A of the Exchange Act. Section 15A(b)(6) requires that the rules of a registered national securities association are designed to prevent fraudulent and manipulative acts and practices, to promote just and equitable principals of trade, to foster cooperation and coordination with persons engaged in regulating, clearing, settling, processing information with respect to, and facilitating transactions in securities, to remove impediments to and perfect the mechanism of a free and open market and a national market system, and, in general, to protect investors and the public interest; and are not designed to permit unfair discrimination between customers, issuers, brokers, or dealers. Section 11A(a)(1)(C) provides that is in the public interest and appropriate for the protection of investors and the maintenance of fair and orderly markets to assure: (1) Economically efficient execution of securities transactions; (2) fair competition among brokers and dealers; (3) the availability to brokers, dealers and investors of information with respect to quotations and transactions in securities; (4) the practicability of brokers executing investors orders in the best market; and (5) an opportunity for investors orders to be executed without the participation of a dealer.

Nasdaq believes that the proposed amendments to NASD Rule 4613(e) are consistent with sections 15A(b)(6) and 11A(a)(1)(C) of the Exchange Act. By attempting to resolve locks and crosses at the market opening, the proposed amendments foster cooperation and coordination with members. The proposal also ensures the fair and orderly operation of Nasdaq and the protection of investors, as its purpose is to limit the disruptions to the Nasdaq market and the potential for harm to investors.

B. Self-Regulatory Organization's Statement on Burden on Competition

Nasdaq does not believe that the proposed rule change will result in any burden on competition that is not necessary or appropriate in furtherance of the purposes of the Exchange Act.

C. Self-Regulatory Organization's Statement on Comments on the Proposed Rule Change Received from Members, Participants, or Others

See response to written comments above.

III. Date of Effectiveness of the Proposed Rule Change and Timing for Commission Action

Within 35 days of the date of publication of this notice in the **Federal Register** or within such longer period (i) as the Commission may designate up to 90 days of such date if it finds such longer period to be appropriate and publishes its reasons for so finding or (ii) as to which the Exchange consents, the Commission will:

(A) By order approve such proposed rule change, or

(B) Institute proceedings to determine whether the proposed rule change should be disapproved.

IV. Solicitation of Comments

Interested persons are invited to submit written data, views, and arguments concerning the foregoing, including whether Amendment Nos. 2 and 3 are consistent with the Exchange Act. Persons making written submissions should file six copies thereof with the Secretary, Securities and Exchange Commission, 450 Fifth Street, NW., Washington, DC 20549–0609. Copies of the submission, all subsequent amendments, all written statements with respect to the proposed rule change that are filed with the Commission, and all written communications relating to the proposed rule change between the Commission and any person, other than those that may be withheld from the public in accordance with the provisions of 5 U.S.C. 552, will be available for inspection and copying in the Commission's Public Reference Room. Copies of such filing will also be available for inspection and copying at the principal office of the NASD. All submissions should refer to file number SR–NASD–00–76 and should be submitted by April 1, 2002.

[20] *See* NDB Letter; Schwab Letter; Archipelago Letter, *supra* note 4.

[21] *See* Knight Letter, *supra* note 4.

[22] *See* BRUT Letter, *supra* note 4. NASD Rule 4613(e)(1)(C)(iv) states that, for purposes of that rule, an 'agency order' means an order(s) that is for the benefit of the account of a natural person executing securities transactions with or through or receiving investment banking services from a broker/dealer, or for the benefit of an 'institutional account' as defined in NASD Rule 3110. An agency order shall not include an order(s) that is for the benefit of a market maker in the security at issue, but shall include an order(s) that is for the benefit of a broker/dealer that is not a market maker in the security at issue.''

[23] *See* Amendment No. 3, *supra* note 6.

[24] *See* Amendment No. 3, *supra* note 6.

[25] *See* Amendment No. 3, *supra* note 6.

For the Commission, by the Division of Market Regulation, pursuant to delegated authority.[26]

Jill M. Peterson,

Assistant Secretary.

[FR Doc. 02–5816 Filed 3–8–02; 8:45 am]

BILLING CODE 8010–01–P

SECURITIES AND EXCHANGE COMMISSION

[Release No. 34–45285A; File No. SR–NASD–2001–93]

Self-Regulatory Organizations; Notice of Filing and Immediate Effectiveness of Proposed Rule Change by National Association of Securities Dealers, Inc. Relating to Fees Associated with the Nasdaq Application of the Primex Auction System™; Correction

March 5, 2002.

Pursuant to section 19(b)(1) of the Securities Exchange Act of 1934 (''Act''),[1] and Rule 19b-4 thereunder,[2] notice is hereby given that on December 17, 2001, the National Association of Securities Dealers, Inc., (''NASD'' or ''Association'') through its subsidiary The Nasdaq Stock Market, Inc. (''Nasdaq''), filed with the Securities and Exchange Commission (''SEC'' or ''Commission'') the proposed rule change as described in Items I, II, and III below, which Items have been prepared by Nasdaq. Nasdaq has designated this proposal as one constituting a fee filing under section 19(b)(3)(A) of the Act, which renders the rule effective upon the Commission's receipt of this filing. Nasdaq will not assess fees pursuant to this fee schedule for approximately the first three months after the Nasdaq application of the Primex Auction System (''Primex'' or ''System'') is operational.[3] Nasdaq intends to begin assessing fees pursuant to this fee schedule beginning on April 1, 2002. However, Nasdaq will issue a Head Trader Alert to notify users of the exact date it will begin assessing fees.

On December 17, 2001, Nasdaq filed Amendment No. 1 to the proposed rule change.[4] Amendment No. 1 corrects the numbering of the footnotes in the narrative portion of the filing and changes the text of the fee schedule to provide that revenue sharing amounts will be paid on a monthly basis. The changes made by Amendment No. 1 were inadvertently omitted from the notice regarding filing and immediate effectiveness of the proposed rule change that the Commission published on January 24, 2002.[5] Accordingly, the Commission is publishing this corrected notice to solicit comments on the proposed rule change, as amended, from interested persons.

I. Self-Regulatory Organization's Statement of the Terms of Substance of the Proposed Rule Change

Nasdaq is proposing to amend NASD Rule 7010 to establish the fee schedule for Nasdaq's application of the Primex Auction System.™ Below is the text of the proposed rule change, as amended. Proposed new language is in *italics.*

7010. System Services

(a)–(q) No changes.

(r) Nasdaq Application of the Primex Auction System™

The following charges shall apply to the use of the Nasdaq Application of the Primex Auction System:

(1) *Transaction Charges:*

Execution Services —for all participants:

- *Order entry—No fee*
- *Auction Response—per share, per execution—$5.00 maximum).* $.01*

Matching Rights—Primex Auction Market Makers (PAMMs) only:

- *50 Percent Match—No fee*
- *Two-Cent Match (per share, per retained order—$2.50 Maximum).** $.0025*

Revenue Sharing—PAMMs only

- Each order executed:***—⅓ of transaction fee

(2) Monthly Access fees

Software

- *Workstation license or unique logon—Per workstation logon*

Stations/logons 1—10—$200
Stations/logons 11—25—$100
Stations/logons 26 and above—$50

- *Proprietary interface license Per license—*

API specification $500—
FIX (customized protocol)—$500

Network

- *Dedicated line—Per line—*

256K primary with backup—$1,564

- *Installation/Uninstall—$1,000 per Nasdaq Staff site visit*

* * * * *

II. Self-Regulatory Organization's Statement of the Purpose of, and Statutory Basis for, the Proposed Rule Change

In its filing with the Commission, Nasdaq included statements concerning the purpose of and basis for the proposed rule change and discussed any comments it received on the proposed rule change. The text of these statements may be examined at the places specified in Item IV below. Nasdaq has prepared summaries, set forth in Sections A, B, and C below, of the most significant aspects of such statements.

A. Self-Regulatory Organization's Statement of the Purpose of, and Statutory Basis for, the Proposed Rule Change

1. Purpose

On August 17, 2001, Nasdaq filed a Form PILOT to commence operation of the Primex system.[6] The System is designed to replicate, in an electronic form, the competitive trading crowd that is associated with an auction market. The System is completely voluntary and available to any NASD member in good standing. Non-NASD members can access the System through an NASD member that subscribes to Primex. Members that desire access to the System must execute the necessary agreements with Nasdaq. Members granted access to the System are referred to as Participants. There are two types of Participants in Primex: (1) Crowd Participants, and (2) Primex Auction Market Makers (''PAMMs.'')

By becoming a Participant, members automatically receive the right to trade as Crowd Participants. Crowd Participants can view all orders exposed in the System; interact with any order put to auction by responding to the auction using all of the System's response tools; submit orders to be

[26] 17 CFR 200.30–3(a)(12).

[1] 15 U.S.C. 78s(b)(1).

[2] 17 CFR 240.19b–4.

[3] As described above, Nasdaq will not assess any fees pursuant to the fee schedule during the initial few months the System is operating, which also means Nasdaq will not share any transaction fees in accordance with the fee schedule during such period. However, Primex Trading N.A., L.L.C., an entity independent of Nasdaq and the licensor of the System, has indicated it will pay any revenue sharing amounts earned by participants during such period.

[4] *See* letter from Peter R. Geraghty, Associate General Counsel, Nasdaq, to John Polise, Senior Special Counsel, Division of Market Regulation (''Division''), Commission, dated December 17, 2001.

[5] *See* Securities Exchange Act Release No. 45285 (January 15, 2002), 67 FR 3521.

* *This fee applies to both Indications and ''real-time'' Responses. When two orders match directly, a fee is charged to the party that entered the second order.*

** *This fee is charged in the event a PAMM attaches its matching right to an order, and the crowd offers two cents or less price improvement to that order.*

*** *Paid to a PAMM when it enters an order that interacts with crowd interest in the system. Revenue sharing applies only to orders in those securities in which the firm is registered as a PAMM. The revenue sharing amounts will be paid on a monthly basis.*

[6] The Form PILOT was amended on November 26, 2001. *See* Letter from Peter R. Geraghty, Associate General Counsel, Nasdaq, to John Polise, Senior Special Counsel, Division, Commission, dated November 26, 2001.

auctioned; and trade as principal, agent, or riskless principal. Crowd Participants can interact with orders being auctioned by submitting Indications, which are instructions to the System that can reside within the System and automatically respond in a certain manner to an auction if and when orders put to auction are available, or by submitting a Response. A Response is an individual instruction that is entered and responds in ''real time'' to orders being auctioned. A firm that elects to register as a PAMM has the same rights and entitlements as Crowd Participants, but because they elect to meet other additional qualifications,[7] PAMMS are entitled to additional privileges. For example, PAMMS are entitled to use the System's automated Match Parameters allowing them to participate in the execution of their own customer orders submitted to the System (*e.g.,* the Two Cent Match Parameter[8] or the 50% Match Parameter[9]). PAMMs also are entitled to revenue sharing, allowing PAMMs to share in the transaction fee paid by other participants when such participants execute against an order submitted to auction by a PAMM.

Nasdaq will impose monthly fees to access the System. These fees vary based on the method chosen by the Participant to access the System. The System will operate on a network that is independent from Nasdaq's other existing systems (*e.g.,* SuperSoes$_{SM}$). Primex Participants will be charged a monthly fee for this independent network. In addition, Participants will be charged for each visit by Nasdaq staff to install, or uninstall, software or hardware necessary to access the System.

In addition to monthly charges, Nasdaq will impose fees based on orders executed through the System. As set forth in the schedule of fees, no fee is charged for submitting an order to auction, and in general no fee is charged to have such orders executed.[10] Execution fees are only charged against Participants that extract liquidity by responding to, and executing against, orders submitted for auction. This execution fee is a penny per share with a maximum charge of $5.00 per execution. Accordingly, the fee would be charged to a Participant for any execution resulting from that Participant's Indication or real-time Response that interacted with an order put to auction.

In addition, and as discussed above, PAMMs have the option of attaching certain matching rights on orders they submit to the System. Nasdaq will impose a fee when a PAMM utilizes the Two-Cent Match feature and retains an order for execution. In such circumstances, the PAMM will be charged $.0025 per share, with a $2.50 maximum per retained order. If the PAMM does not retain the order because the order is executed against the Crowd Participant(s) who has offered more that two cents of price improvement, there is no charge to the PAMM. Instead, Nasdaq will share with the PAMM one-third of the transaction fee collected for such transaction. Nasdaq has decided to share the transaction fee in these circumstances to encourage PAMMS to submit orders for auction in the System. The revenue sharing amounts will be paid on a monthly basis.

2. Statutory Basis

Nasdaq believes that the proposed rule change is consistent with the provisions of section 15A(b)(5) of the Act[11] in that the proposed fees provide for the equitable allocation of reasonable fees among members. The fees apply equally to all Participants in the System, based upon the category the member has chosen to participate in the System. All members in the same category of Participant (e.g., PAMM) are subject to the same fees.

B. Self-Regulatory Organization's Statement on Burden on Competition

Nasdaq does not believe that the proposed rule change will result in any burden on competition that is not necessary or appropriate in furtherance of the purposes of the Act.

C. Self-Regulatory Organization's Statement on Comments on the Proposed Rule Change Received from Members, Participants, or Others

Written comments were neither solicited nor received.

III. Date of Effectiveness of the Proposed Rule Change and Timing for Commission Action

The foregoing rule change, as amended, has become effective upon filing pursuant to section 19(b)(3)(A) of the Act[12] and paragraph (f)(2) of Rule 19b–4 thereunder[13] in that it establishes the fee schedule for the use of a Nasdaq system.

At any time within 60 days of the filing of the proposed rule change, the Commission may summarily abrogate the rule change if it appears to the Commission that such action is necessary or appropriate in the public interest, for the protection of investors, or otherwise in furtherance of the purposes of the Act.

IV. Solicitation of Comments

Interested persons are invited to submit written data, views, and arguments concerning the foregoing, including whether the proposed rule change, as amended, is consistent with the Act. Persons making written submissions should file six copies thereof with the Secretary, Securities and Exchange Commission, 450 Fifth Street, NW, Washington, DC 20549–0609. Copies of the submission, all subsequent amendments, all written statements with respect to the amended proposed rule change that are filed with the Commission, and all written communications relating to the proposed rule change between the Commission and any person, other than those that may be withheld from the public in accordance with the provisions of 5 U.S.C. 552, will be available for inspection and copying in the Commission's Public Reference Room. Copies of such filing will also be available for inspection and copying at the principal office of the NASD. All submissions should refer to the file

[7] The requirements to be become and maintain registration as a PAMM are contained in NASD Rule 5020. In general, a PAMM for a particular security eligible for trading in the System must be either: (1) A Nasdaq market maker in the security, if the security is listed on Nasdaq; or (2) a Consolidated Quotation System market maker, if the security is listed on an exchange. PAMMs may retain their PAMM status for a prospective calendar quarter provided they had qualified by submitting to the System a minimum percentage of certain order-types in the previous calendar quarter, as detailed in NASD Rule 5020. There never is any requirement for participants to register as a PAMM or to submit any amount of orders at any time.

[8] A complete description of the matching parameters and their operation are contained in NASD Rule 5014. Generally, however, when a PAMM submits an order to the System with the Two Cent Match parameter, and there is interest from the Crowd that can satisfy the order, the order entered with the Two Cent Match will be executed against such interest by the Crowd during its exposure, provided that such Crowd interest offers to provide price improvement greater than two cents superior to the best quote publicly displayed in the National Best Bid/Offer (''NBBO'') at the time such Crowd interest is available.

[9] Generally, when a PAMM submits an order to the System with the 50% Match parameter, the order will be executed against any interest by the Crowd that satisfies the order during its exposure at the price(s) and size of such Crowd interest, for no more than 50% of the order. Any execution with the Crowd will immediately cause the System to provide the order with an additional execution of like size and price against the PAMM that entered the order.

[10] The one exception is where an order submitted to auction directly meets and interacts with another order submitted to auction, in which case the second order is treated as a Response, and is charged a fee accordingly.

[11] 15 U.S.C. 78k–1(b)(5).

[12] 15 U.S.C. 78s(b)(3)(A).

[13] 17 CFR 240.19b–4(f)(2).

number SR-NASD–2001–93 and should be submitted by April 1, 2002.

For the Commission, by the Division of Market Regulation, pursuant to delegated authority.[14]

Jill M. Peterson,

Assistant Secretary.

[FR Doc. 02–5817 Filed 3–8–02; 8:45 am]

BILLING CODE 8010–01–P

DEPARTMENT OF STATE

[Public Notice 3941]

Culturally Significant Objects Imported for Exhibition Determinations: ''The Art and Politics of Arthur Szyk''

AGENCY: United States Department of State.

ACTION: Notice.

SUMMARY: Notice is hereby given of the following determinations: Pursuant to the authority vested in me by the Act of October 19, 1965 (79 Stat. 985; 22 U.S.C. 2459), Executive Order 12047 of March 27, 1978, the Foreign Affairs Reform and Restructuring Act of 1998 (112 Stat. 2681, *et seq.*; 22 U.S.C. 6501 note, *et seq.*), Delegation of Authority No. 234 of October 1, 1999 (64 FR 56014), and Delegation of Authority No. 236 of October 19, 1999 (64 FR 57920), as amended, I hereby determine that the objects to be included in the exhibition, ''The Art and Politics of Arthur Szyk,'' imported from abroad for temporary exhibition within the United States, are of cultural significance. These objects are imported pursuant to a loan agreement with a foreign lender. I also determine that the exhibition or display of the exhibit objects at the United States Holocaust Memorial Museum, Washington, DC, from on or about April 11, 2002, to on or about October 14, 2002, and at possible additional venues yet to be determined, is in the national interest. Public Notice of these determinations is ordered to be published in the **Federal Register**.

FOR FURTHER INFORMATION CONTACT: For further information, including a list of exhibit objects, contact Paul W. Manning, Attorney-Adviser, Office of the Legal Adviser, 202/619–5997, and the address is United States Department of State, SA–44, Room 700, 301 4th Street, SW., Washington, DC 20547–0001.

[14] 17 CFR 200.30–3(a)(12).

Dated: March 1, 2002.

Patricia S. Harrison,

Assistant Secretary for Educational and Cultural Affairs, United States Department of State.

[FR Doc. 02–5769 Filed 3–8–02; 8:45 am]

BILLING CODE 4710–08–P

DEPARTMENT OF STATE

[Public Notice 3942]

Notice of Proposal To Extend U.S.-Guatemala Memorandum of Understanding

AGENCY: Department of State.

ACTION: Notice of Proposal to Extend U.S.-Guatemala.

Memorandum of Understanding

The Government of the Republic of Guatemala has indicated its interest in an extension of the *Memorandum of Understanding between the Government of the United States of America and the Government of the Republic of Guatemala Concerning the Imposition of Import Restrictions on Archaeological Objects and Materials from the Pre-Columbian Cultures of Guatemala,* signed on September 29, 1997. Pursuant to the authority vested in the president's designee under Department of State Delegation of Authority No. 236–3, and pursuant to the requirement under 19 U.S.C. 2602(f)(1), an extension of this MOU is hereby proposed. Pursuant to 19 U.S.C. 2602(f)(2), the views and recommendations of the Cultural Property Advisory Committee regarding this proposal will be requested.

A copy of this Memorandum of Understanding, the designated list of restricted categories of material, and related information can be found at the following Web site: *http://exchanges.state.gov/education/culprop.*

Dated: March 5, 2002.

Patricia S. Harrison,

Assistant Secretary for Educational and Cultural Affairs, Department of State.

[FR Doc. 02–5767 Filed 3–8–02; 8:45 am]

BILLING CODE 4710–11–P

OFFICE OF THE UNITED STATES TRADE REPRESENTATIVE

Determinations Under the African Growth and Opportunity Act

AGENCY: Office of the United States Trade Representative.

ACTION: Notice.

SUMMARY: The United States Trade Representative (USTR) has determined that Cameroon has adopted an effective visa system and related procedures to prevent unlawful transshipment and the use of counterfeit documents in connection with shipments of textile and apparel articles and has implemented and follows, or is making substantial progress toward implementing and following, the customs procedures required by the African Growth and Opportunity Act (AGOA). Therefore, imports of eligible products from Cameroon qualify for the textile and apparel benefits provided under the AGOA.

DATES: Effective March 1, 2002.

FOR FURTHER INFORMATION CONTACT: Chris Moore, Director for African Affairs, Office of the United States Trade Representative, (202) 395–9514.

SUPPLEMENTARY INFORMATION: The AGOA (Title I of the Trade and Development Act of 2000, Pub. L. 106–200) provides preferential tariff treatment for imports of certain textile and apparel products of beneficiary sub-Saharan African countries. The textile and apparel trade benefits under the AGOA are available to imports of eligible products from countries that the President designates as ''beneficiary sub-Saharan African countries,'' provided that these countries (1) have adopted an effective visa system and related procedures to prevent unlawful transshipment and the use of counterfeit documents, and (2) have implemented and follow, or are making substantial progress toward implementing and following, certain customs procedures that assist the Customs Service in verifying the origin of the products.

In Proclamation 7350 (Oct. 2, 2000), the President designated Cameroon as a ''beneficiary sub-Saharan African country.'' Proclamation 7350 delegated to the United States Trade Representative the authority to determine whether designated countries have met the two requirements described above. The President directed the USTR to announce any such determinations in the **Federal Register** and to implement them through modifications of the Harmonized Tariff Schedule of the United States (HTS). Based on actions that Cameroon has taken, I have determined that Cameroon has satisfied these two requirements.

Accordingly, pursuant to the authority vested in the USTR by Proclamation 7350, U.S. note 7(a) to subchapter II of chapter 98 of the HTS and U.S. note 1 to subchapter XIX of chapter 98 of the HTS are each modified by inserting ''Cameroon'' in alphabetical sequence in the list of countries. The foregoing modifications to the HTS are

effective with respect to articles entered, or withdrawn from warehouse for consumption, on or after the effective date of this notice. Importers claiming preferential tariff treatment under the AGOA for entries of textile and apparel articles should ensure that those entries meet the applicable visa requirements. *See Visa Requirements Under the African Growth and Opportunity Act* 66 FR 7837 (2001).

Robert B. Zoellick,

United States Trade Representative.

[FR Doc. 02–5766 Filed 3–8–02; 8:45 am]

BILLING CODE 3190–01–M

DEPARTMENT OF TRANSPORTATION

Federal Aviation Administration

Aviation Rulemaking Advisory Committee; Aircraft Certification Procedures Issues Meeting

AGENCY: Federal Aviation Administration (FAA), DOT.

ACTION: Notice of public meeting.

SUMMARY: This notice announces a public meeting of the Federal Aviation Administration's Aviation Rulemaking Advisory Committee to discuss Aircraft Certification Procedures issues.

DATES: The meeting will be held on March 21, 2002, from 8:30 a.m. to 11:30 a.m. Arrange for oral presentations by March 15, 2002.

ADDRESSES: The meeting will be held at the General Aviation Manufacturers Association, 1400 K Street, NW., Suite 801, Washington, DC 20005–2485.

FOR FURTHER INFORMATION CONTACT: Maisa Mullen, FAA, Office of Rulemaking (ARM–205), 800 Independence Avenue, SW., Washington, DC 20591; telephone: (202) 267–7653, fax: (202) 267–5075.

SUPPLEMENTARY INFORMATION: Pursuant to section 10(a)(2) of the Federal Advisory Committee Act (Pub. L. 92–463; 5 U.S.C. App. II), notice is hereby given of a meeting of the Aviation Rulemaking Advisory Committee to be held on March 212, 2002, from 8:30 a.m. to 11:30 a.m. at the General Aviation Manufacturers Association, 1400 K Street, NW., Suite 801, Washington, DC 20005–2485. The agenda will include:

1. Opening Remarks.
2. Committee Administration.
3. A discussion and vote on the Parts and Production Certification Working Group draft advisory documents, entitled ''Means of Compliance with Proposed Quality System Requirements,'' ''Recommendation for Consistent Application of ODAR Processes for PAH Shipments,'' ''PAH Transition to New Quality System Requirements,'' and ''ARAC Working Group Advisory Circular Proposal.''
4. A status report on the Parts and Production Certification Working Group's remaining tasks.
5. A status report on the FAA submitted rulemaking projects for ''Establishment of Organization Designation Authorization (ODA) Procedures'', and ''Production Certification and Parts Manufacturing.''
6. A discussion of future meeting dates, locations, activities, and plans.

Attendance is open to the interested public, but will be limited to the space available. The FAA will arrange teleconference capability for individuals wishing to participate by teleconference if we receive notification before March 15, 2002. Arrangements to participate by teleconference can be made by contacting the person listed in the **FOR FURTHER INFORMATION CONTACT** section. Callers outside the Washington metropolitan area will be responsible for paying long distance charges.

The public must make arrangements by March 15, 2002, to present oral statements at the meeting. The public may present written statements to the committee at any time by providing 25 copies to the Assistant Executive Director, or by bringing the copies to the meeting. Public statements will only be considered if time permits. In addition, sign and oral interpretation, as well as an assistive listening device, can be made available at the meeting, if requested 10 calendar days before the meeting. Arrangements may be made by contacting the person listed under the heading **FOR FURTHER INFORMATION CONTACT.**

Issued in Washington, DC, on March 6, 2002.

Tony Fazio,

Executive Director, Aviation Rulemaking Advisory Committee.

[FR Doc. 02–5789 Filed 3–6–02; 8:45 am]

BILLING CODE 4910–13–M

DEPARTMENT OF TRANSPORTATION

Federal Highway Administration

Environmental Impact Statement; San Joaquin County, CA

AGENCY: Federal Highway Administration (FHWA), Department of Transportation.

ACTION: Notice of Intent.

SUMMARY: The FHWA is issuing this notice to advise the public that an environmental impact statement will be prepared for a proposed highway project in San Joaquin County, California.

FOR FURTHER INFORMATION CONTACT: Michael G. Ritchie, Division Administrator, Federal Highway Administration, California Division, 980 Ninth St., Suite 400, Sacramento, California 95814–2724.

SUPPLEMENTARY INFORMATION: The FHWA, in cooperation with the California Department of Transportation (Caltrans), will prepare an Environmental Impact Statement (EIS) on a proposal to improve State Route (SR) 99 in San Joaquin County, California. The proposed improvement would involve widening SR 99 from four lanes to six lanes from 0.6 kilometers north of Arch Road to 0.2 kilometers south of SR 4 West, in Stockton, San Joaquin County, California. Depending on the alternative selected, this project proposes to also remove the existing South Stockton over-crossing (#29–156) and the Clark Drive ''button hook'' ramps. The project would evaluate the feasibility of eliminating existing freeway access at the Farmington Road (SR 4 East) interchange and constructing frontage roads between Farmington Road (SR 4 East) and Mariposa Road to maintain continuity through the SR 4 East system. The proposed project would extend Netherton Avenue to Mariposa Road. It would reconstruct the Farmington Road (SR 4 East), Mariposa Road, and Charter Way interchanges and replace all existing bridges within the project limits to meet width and vertical clearance standards with provisions for the ultimate eight-lane freeway concept.

Alternatives under consideration include (1) taking no action, (2) widening into the median leaving a median that would vary between 3.8 meters and 7.1 meters, (3) widening into the median and to the outside leaving a median that would vary form 7.1 meters to 10.8 meters and, (4) reconstructing SR 99 to full standards with an 18-meter median.

Letters describing the proposed action and soliciting comments will be sent to the appropriate federal, state, and local agencies, and to private organizations and citizens who have previously expressed or are known to have interest in this proposal. A public hearing will be held. Public notice will be given of the time and place of the hearing. The draft EIS will be available for public and agency review and comment before the public hearing.

To ensure that all concerns and issues related to this proposed action are addressed and identified, comments and suggestions are invited from all

interested parties. If you have any information regarding historic resources, endangered species, or other sensitive issues that could be affected by this project, please notify this office. Also, please indicate if you would be interested in being notified at the completion of historic resources studies.

Comments or questions concerning this proposed action and the EIS should be directed to the FHWA at the address provided above.

(Catalog of Federal Domestic Assistance Program Number 20.205, Highway Research, Planning, and Construction. The regulations implementing Executive Order 12372 regarding intergovernmental consultation on Federal programs and activities apply to this program.)

Issued on: January 29, 2002.

Maiser Khaled,

District Engineer, Sacramento, California.

[FR Doc. 02–5758 Filed 3–8–02; 8:45 am]

BILLING CODE 4910–22–M

DEPARTMENT OF TRANSPORTATION

Federal Highway Administration

Environmental Impact Statement: Westchester County, New York

AGENCY: Federal Highway Administration (FHWA), DOT.

ACTION: Notice of intent.

SUMMARY: The FHWA is issuing this notice to advise the public that an environmental impact statement will be prepared for a proposed highway project in Westchester County, New York.

FOR FURTHER INFORMATION CONTACT: Robert A. Dennison III, P.E., Regional Director, NYSDOT Region 8; Eleanor Roosevelt State Office Building; 4 Burnett Boulevard; Poughkeepsie, NY 12603; Telephone: (845) 431–5750; or, Robert E. Arnold, Division Administrator, Federal Highway Administration, New York Division, Leo W. O'Brien Federal Building, Room 719, Clinton Avenue and North Pearl Street, Albany, New York 12207; Telephone: (518) 431–4127.

SUPPLEMENTARY INFORMATION: The FHWA, in cooperation with the New York State Department of Transportation (NYSDOT), will prepare an environmental impact statement (EIS) on a proposal to improve NYS Route 9A in Westchester County, New York. The proposed improvements will involve the reconstruction of approximately 2.5 miles of the existing route from just south of Route 119 to just north of Route 100C in the Towns of Greenburgh and Mount Pleasant and Village of Elmsford. The improvements to Route 9A are considered necessary to provide for the existing and projected traffic demand and to improve safety. Also, included in this proposal is the replacement of the existing Route 100C bridge over Route 9A and a new I–287 eastbound exit ramp to Route 9A.

Alternatives under consideration include: (1) Taking no actions; (2) widening and reconstructing Route 9A; (3) widening and reconstructing Route 9A and providing a new eastbound Cross Westchester Expressway (Route I–287) off ramp; (4) widening and reconstructing 9A, providing new eastbound Cross Westchester Expressway (Route I–287) off ramp, and improving access to major industrial/commercial area; and (5) constructing a bypass on new alignment in association with the widening and reconstruction of Route 9A. Incorporated into and studied with the various build alternatives will be design variations of grade and alignment.

Letter describing the proposed action and soliciting comments will be sent to appropriate Federal, State, and local agencies, and to private organizations and citizens who have previously expressed interest in this proposal. A series of public information meetings will be held in the Town of Greenburg between March 2002 and June 2003. In addition, a public hearing will be held. Public notice will be given of the time and place of the meetings and hearing. The draft EIS, when prepared, will be available for public and agency review and comment. A formal NEPA scoping meeting will be held at the Greenburgh Town Hall, 320 Tarrytown Road, Elmsford, New York 10523, on Wednesday, March 27, 2002. At 3:30 P.M. a meeting will be held for Federal, State, and Local agencies and at 7:15 P.M. a meeting for the general public and all interested parties. Each meeting will be preceded by a 30-minute open house during which attendees can view concept plans and interact with project team members.

To ensure that the full range of issues related to this proposed action are addressed and all significant issues identified, comments and suggestions are invited from all interested parties. Comments or questions concerning this proposed action and the EIS should be directed to the NYSDOT or FHWA at the addresses provided above.

(Catalog of Federal Domestic Assistance Program Number 20.205, Highway Research, Planning and Construction. The regulations implementing Executive Order 12372 regarding intergovernmental consultation on Federal programs and activities apply to this program.)

Authority: 23 U.S.C. 315; 23 CFR 771.123.

Issued on: February 25, 2002.

Douglas P. Conlan,

District Engineer, Federal Highway Administration, Albany, New York.

[FR Doc. 02–5759 Filed 3–8–02; 8:45 am]

BILLING CODE 4910–22–M

DEPARTMENT OF VETERANS AFFAIRS

[OMB Control No. 2900–0601]

Agency Information Collection Activities Under OMB Review

AGENCY: Veterans Benefits Administration, Department of Veterans Affairs.

ACTION: Notice.

SUMMARY: In compliance with the Paperwork Reduction Act (PRA) of 1995 (44 U.S.C., 3501 *et seq.*), this notice announces that the Veterans Benefits Administration (VBA), Department of Veterans Affairs, has submitted the collection of information abstracted below to the Office of Management and Budget (OMB) for review and comment. The PRA submission describes the nature of the information collection and its expected cost and burden; it includes the actual data collection instrument.

DATES: Comments must be submitted on or before April 10, 2002.

ADDRESSES: Send comments and recommendations concerning any aspect of the information collection to VA's Desk Officer, OMB Human Resources and Housing Branch, New Executive Office Building, Room 10235, Washington, DC 20503, (202) 395–7316. Please refer to ''OMB Control No. 2900–0601'' in any correspondence.

FOR FURTHER INFORMATION OR A COPY OF THE SUBMISSION CONTACT: Denise McLamb, Information Management Service (045A4), Department of Veterans Affairs, 810 Vermont Avenue, NW, Washington, DC 20420, (202) 273–8030 or FAX (202) 273–5981. Please refer to ''OMB Control No. 2900–0601.''

SUPPLEMENTARY INFORMATION:

Title: Loan Guaranty: Requirements for Interest Rate Reduction Refinancing Loans.

OMB Control Number: 2900–0601.

Type of Review: Extension of a currently approved collection.

Abstract: VA is authorized to guarantee loans to veterans to refinance existing mortgage loans previously guaranteed by VA provided the veteran still owns the property used as security for the loan. Lenders must collect certain information concerning the veteran and the veteran's credit history (and spouse or other co-borrower, as

applicable) in order to properly underwrite delinquent Interest Rate Reduction Refinancing Loan (IRRRLs). Under these proposed requirements, VA proposes to require that the lender provide VA with the credit information to assure itself that IRRRLs to refinance delinquent loans are underwritten in reasonable and prudent manner.

An agency may not conduct or sponsor, and a person is not required to respond to a collection of information unless it displays a currently valid OMB control number. The **Federal Register** Notice with a 60-day comment period soliciting comments on this collection of information was published on October 26, 2001, at page 54341.

Affected Public: Business or other for profit.

Estimated Annual Burden: 85 hours.

Estimated Average Burden Per Respondent: 30 minutes.

Frequency of Response: On occasion.

Estimated Number of Respondents: 170.

Dated: February 26, 2002.

By direction of the Secretary.

Barbara H. Epps,

Management Analyst, Information Management Service.

[FR Doc. 02–5786 Filed 3–8–02; 8:45 am]

BILLING CODE 8320–01–P

DEPARTMENT OF VETERANS AFFAIRS

[OMB Control No. 2900–0614]

Agency Information Collection Activities Under OMB Review

AGENCY: Veterans Health Administration, Department of Veterans Affairs.

ACTION: Notice.

SUMMARY: In compliance with the Paperwork Reduction Act (PRA) of 1995 (44 U.S.C., 3501 *et seq.*), this notice announces that the Veterans Health Administration (VHA), Department of Veterans Affairs, has submitted the collection of information abstracted below to the Office of Management and Budget (OMB) for review and comment. The PRA submission describes the nature of the information collection and its expected cost and burden; it includes the actual data collection instrument.

DATES: Comments must be submitted on or before April 10, 2002.

ADDRESSES: Send comments and recommendations concerning any aspect of the information collection to VA's OMB Desk Officer, OMB Human Resources and Housing Branch, New Executive Office Building, Room 10235, Washington, DC 20503 (202) 395–7316. Please refer to ''OMB Control No. 2900–0614'' in any correspondence.

FOR FURTHER INFORMATION OR A COPY OF THE SUBMISSION CONTACT: Denise McLamb, Information Management Service (045A4), Department of Veterans Affairs, 810 Vermont Avenue, NW., Washington, DC 20420, (202) 273–8030, FAX (202) 273–5981 or e-mail: *denise.mclamb@mail.va.gov.* Please refer to ''OMB Control No. 2900–0614.''

SUPPLEMENTARY INFORMATION:

Title: 4th Phase Supplement, ''Measurement/Validation of Psychosocial Risk and Resilience Factors Accounting for Physical/Mental Health and Health Related Quality of Life Among Veterans'', VA Form 10–21036(NR).

OMB Control Number: 2900–0614.

Type of Review: Revision of a currently approved collection.

Abstract: Phases I and II of this study are completed. The collection of information associated with Phase III is also completed. Phase IV is intended to complete VA's study of the ''psychological and biomedical measurements for early identification of individuals at risk for stress-related illness.'' The information collected will be used to produce a reliable inventory of psychosocial risk and resilience factors for contemporary military personnel and then demonstrate its validity vis-à-vis Gulf War veterans' self-reported somatic and psychological symptoms and judgments of health-related quality of life.

An agency may not conduct or sponsor, and a person is not required to respond to a collection of information unless it displays a currently valid OMB control number. The **Federal Register** Notice with a 60-day comment period soliciting comments on this collection of information was published on December 10, 2001, at page 63746.

Affected Public: Individuals or households.

Estimated Annual Burden: 313 hours.

Estimated Average Burden Per Respondent: 45 minutes.

Frequency of Response: One time.

Estimated Number of Respondents: 417.

Dated: February 27, 2002.

By direction of the Secretary:

Barbara H. Epps,

Management Analyst, Information Management Service.

[FR Doc. 02–5787 Filed 3–8–02; 8:45 am]

BILLING CODE 8320–01–P

DEPARTMENT OF VETERANS AFFAIRS

[OMB Control No. 2900–0166]

Agency Information Collection Activities Under OMB Review

AGENCY: Veterans Benefits Administration, Department of Veterans Affairs.

ACTION: Notice.

SUMMARY: In compliance with the Paperwork Reduction Act (PRA) of 1995 (44 U.S.C., 3501 *et seq.*), this notice announces that the Veterans Benefits Administration (VBA), Department of Veterans Affairs, has submitted the collection of information abstracted below to the Office of Management and Budget (OMB) for review and comment. The PRA submission describes the nature of the information collection and its expected cost and burden; it includes the actual data collection instrument.

DATES: Comments must be submitted on or before April 10, 2002.

ADDRESSES: Send comments and recommendations concerning any aspect of the information collection to VA's OMB Desk Officer, OMB Human Resources and Housing Branch, New Executive Office Building, Room 10235, Washington, DC 20503 (202) 395–7316. Please refer to ''OMB Control No. 2900–0166'' in any correspondence.

FOR FURTHER INFORMATION OR A COPY OF THE SUBMISSION CONTACT: Denise McLamb, Information Management Service (045A4), Department of Veterans Affairs, 810 Vermont Avenue, NW., Washington, DC 20420, (202) 273–8030, FAX (202) 273–5981 or e-mail: *denise.mclamb@mail.va.gov.* Please refer to ''OMB Control No. 2900–0166.''

SUPPLEMENTARY INFORMATION:

a. Application for Ordinary Life Insurance, Replacement Insurance for Modified Life Reduced at Age 65, National Service Life Insurance, VA Form 29–8485.

b. Application for Ordinary Life Insurance, Replacement Insurance for Modified Life Reduced at Age 70, National Service Life Insurance, VA Form 29–8485a.

c. Application for Ordinary Life Insurance, Replacement Insurance for Modified Life Reduced at Age 65, National Service Life Insurance, VA Form 29–8700.

d. Information About Modified Life Reduction, VA Forms 29–8700a–e.

e. Application for Ordinary Life Insurance, Replacement Insurance for Modified Life Reduced at Age 70, National Service Life Insurance, VA Form 29–8701.

f. Information About Modified Life Reduction, VA Forms 29–8701a–e.

OMB Control Number: 2900–0166.

Type of Review: Reinstatement, without change, of a previously approved collection for which approval has expired.

Abstract: The forms are used by the policyholder to apply for replacement insurance for Modified Life Insurance Reduced at Ages 65 and 70. The information is used by VA to initiate the granting of coverage for which applied.

An agency may not conduct or sponsor, and a person is not required to respond to a collection of information unless it displays a currently valid OMB control number. The **Federal Register** Notice with a 60-day comment period soliciting comments on this collection of information was published on May 3, 2001, at page 22284.

Affected Public: Individuals or households.

Estimated Annual Burden: 1,284 hours.

Estimated Average Burden Per Respondent: 5 minutes.

Frequency of Response: On occasion.

Estimated Number of Respondents: 15,400.

Dated: February 28, 2002.

By direction of the Secretary:

Barbara H. Epps,

Management Analyst, Information Management Service.

[FR Doc. 02–5788 Filed 3–8–02; 8:45 am]

BILLING CODE 8320–01–P

Notices

Federal Register

Vol. 67, No. 47

Monday, March 11, 2002

This section of the FEDERAL REGISTER contains documents other than rules or proposed rules that are applicable to the public. Notices of hearings and investigations, committee meetings, agency decisions and rulings, delegations of authority, filing of petitions and applications and agency statements of organization and functions are examples of documents appearing in this section.

DEPARTMENT OF AGRICULTURE

Commodity Credit Corporation

Request for Reinstatement and Revision of a Previously Approved Information Collection

AGENCY: Commodity Credit Corporation (CCC), USDA.

ACTION: Notice and request for comments.

SUMMARY: In accordance with the Paperwork Reduction Act of 1995, this notice announces the intention of CCC to request reinstatement and revision of an information collection previously approved with respect to the Upland Cotton User Marketing Certificate Program (Step 2 program). The information collection will allow CCC to administer the Step 2 program.

DATES: Comments on this notice must be received on or before May 10, 2002, to be assured consideration.

ADDITIONAL INFORMATION OR COMMENTS: Contact Timothy Murray, USDA, Farm Service Agency, Warehouse and Inventory Division, Inventory Management Branch, STOP 0553, 1400 Independence Avenue, SW., Washington, DC 20250–0553, (202) 720–7398; e-mail *Tim_Murray@wdc.fsa.usda.gov.*

SUPPLEMENTARY INFORMATION:

Title: Upland Cotton Domestic User/Exporter Agreement and Payment Program.

OMB Control Number: 0560–0136.

Expiration Date of Approval: February 28, 2002.

Type of Request: Reinstatement and Revision of a Previously-Approved Information Collection.

Abstract: The information collected under OMB Control Number 0560–0136, as identified above, allows CCC to administer the Upland Cotton User Agreement and User Marketing Certificate Program as authorized by the Federal Agriculture Improvement and Reform Act of 1996 (1996 Act). Section 136(a) of the 1996 Act authorizes payments to eligible U.S. textile manufacturers and exporters under the Upland Cotton User Marketing Certificate Program if, for 4 consecutive weeks, (1) the U.S. Northern Europe price, as quoted for Middling 1 3/32-inch cotton, exceeds the Northern Europe price by more than 1.25 cents per pound, and (2) the prevailing upland cotton adjusted world market price is less than 134 percent of the current-crop base quality loan rate. Currently, to participate in the program, manufacturers and exporters must sign an agreement with CCC using form CCC–1045. Domestic manufacturers must report to CCC their weekly consumption of cotton as a basis for making payments. Exporters must provide basic shipping and invoice information for each shipment of cotton. No change is proposed in the existing information collection requirements, and program participants will not be required to sign a new agreement upon OMB's extension of this information collection. CCC provides a suggested format for the reports but program participants may submit the same information to CCC in a format that is convenient for them.

Estimate of Burden: Public reporting burden for this information collection is estimated to average 14 minutes per response.

Respondents: U.S. cotton exporters and U.S. cotton mills.

Estimated Number of Respondents: 310.

Estimated Number of Responses Per Respondent: 65.

Estimated Total Annual Burden on Respondents: 4,700 hours.

Comments are requested regarding (a) whether the collection of information is necessary for the proper performance of the functions of the agency, including whether the information will have practical utility; (b) the accuracy of the agency's estimate of burden including the validity of the methodology and assumptions used; (c) ways to enhance the quality, utility and clarity of the information to be collected; and (d) ways to minimize the burden of the collection of information on those who are to respond, including through the use of appropriate automated, electronic, mechanical, or other technological collection techniques or other forms of information technology.

Comments should be sent to the Desk Officer for Agriculture, Office of Information and Regulatory Affairs, Office of Management and Budget, Washington, D.C. 20503, and to Timothy Murray at the address listed above. All comments will become a matter of public record.

A comment to OMB is best assured of having its full effect if OMB receives it within 60 days of publication.

Signed at Washington, DC, on February 15, 2002.

James R. Little,

Executive Vice President, Commodity Credit Corporation.

[FR Doc. 02–5762 Filed 3–8–02; 8:45 am]

BILLING CODE 3410–05–P

DEPARTMENT OF AGRICULTURE

Food Safety and Inspection Service

[Docket No. 02–001N]

Codex Alimentarius Commission: 30th Session of the Codex Committee on Food Labelling

AGENCY: Office of the Under Secretary for Food Safety, USDA.

ACTION: Notice of public meeting, request for comments.

SUMMARY: The Office of the Under Secretary for Food Safety, U.S. Department of Agriculture (USDA), and the Food and Drug Administration (FDA), are sponsoring a public meeting on March 19, 2002, to provide information and receive public comments on agenda items that will be discussed at the Codex Committee on Food Labelling (CCFL), which will be held in Halifax, Canada on May 6–10, 2002. The Under Secretary and FDA recognize the importance of providing interested parties the opportunity to obtain background information on the Thirtieth Session of the Food Labelling Committee of the Codex Alimentarius Commission (Codex) and to address items on the Agenda for the 30th CCFL.

DATES: The public meeting is scheduled for Tuesday, March 19th, 2002, from 1 p.m. to 5 p.m.

ADDRESSES: The public meeting will be held at the Auditorium, Harvey W. Wiley Federal Building, 5100 Paint Branch Parkway, College Park, MD. To receive copies of the documents referenced in the notice contact the FSIS

Docket Clerk, U.S. Department of Agriculture, Food Safety and Inspection Service, Room 102, Cotton Annex, 300 12th Street, SW., Washington, DC 20250–3700. The documents will also be accessible via the World Wide Web at the following address: *http://www.codexalimentarius.net.* If you have comments, please send an original and two copies to the FSIS Docket Room, Docket #02–001N. All comments submitted will be available for public inspection in the Docket Clerk's Office between 8:30 a.m. and 4:30 p.m., Monday through Friday.

FOR FURTHER INFORMATION CONTACT: Dr. F. Edward Scarbrough, U.S. Manager for Codex, U.S. Codex Office, FSIS Room 4861, South Building, 1400 Independence Avenue SW., Washington, DC 20250–3700, *Phone:* (202) 205–7760, *Fax:* (202) 720–3157. Persons requiring a sign language interpreter or other special accommodations should notify Dr. F. Edward Scarbrough at the above telephone number.

SUPPLEMENTARY INFORMATION:

Background

Codex was established in 1962 by two United Nations organizations, the Food and Agriculture Organization (FAO) and the World Health Organization (WHO). Codex is the major international organization for protecting the health and economic interests of consumers and encouraging fair international trade in food. Through adoption of food standards, codes of practice, and other guidelines developed by its committees, and by promoting their adoption and implementation by governments, Codex seeks to ensure that the world's food supply is sound, wholesome, free from adulteration, and correctly labeled. In the United States, USDA, FDA, and EPA manage and carry out U.S. Codex activities.

The Codex Committee on Food Labeling drafts provision on labeling applicable to all foods; considers, amends if necessary, and endorses specific provisions on labeling of draft standards, codes of practice, and guidelines prepared by other Codex committees; studies specific labeling problems assigned to it by the Commission; and studies problems associated with the advertisement of food with particular reference to claims and misleading descriptions. The Committee is chaired by Canada.

Issues To Be Discussed at the Public Meeting

The provisional agenda items will be discussed during the public meeting:

1. Adoption of the Agenda.
2. Matters referred by the Codex Alimentarius Commission and other Codex Committees.
3. Consideration of Labelling Provisions in Draft Codex Standards.
4. Guidelines for the Production, Processing, Labelling and Marketing of Organically Produced Foods: Proposed Draft Revised Sections: Section 5—Criteria and Annex Annex 2—Permitted Substances.
5. (a) Draft Recommendations for the Labelling of Foods obtained through Certain Techniques of Genetic Modification/Genetic Engineering (Draft Amendment to the General Standard for the Labelling of Prepackaged Foods): Definitions.

(b) Proposed Draft Recommendations for the Labelling of Foods obtained through Certain Techniques of Genetic Modification/Genetic Engineering (Proposed Draft Guidelines for the Labelling of Foods and Food Ingredients Obtained through Certain Techniques of Genetic Modification/Engineering): Labelling Provisions.

6. Draft Amendment to the General Standard for the Labelling of Prepackaged Foods (Class names).
7. Proposed Draft Amendment to the Guidelines on Nutrition Labelling (Section 3.2 Listing of Nutrients).
8. Proposed Draft Recommendations for the Use of Health and Nutrition Claims.
9. Proposed Draft Amendment to the General Standard for the Labelling of Prepackaged Foods: Quantitative Declaration of Ingredients.
10. Discussion Paper on Country of Origin Labelling.
11. Discussion Paper on Misleading Claims.

Each issue listed will be fully described in documents distributed, or to be distributed, by the Canadian Secretariat to the Meeting. Members of the public may access or request copies of these documents (see **ADDRESSES**).

Public Meeting

At the March 19th public meeting, the agenda items will be described, discussed, and attendees will have the opportunity to pose questions and offer comments. Comments may be sent to the FSIS Docket Room (*see* **ADDRESSES**). Written comments should state that they relate to activities of the 30th CCFL.

Additional Public Notification

Pursuant to Departmental Regulation 4300–4, ''Civil Rights Impact Analysis,'' dated September 22, 1993, FSIS has considered the potential civil rights impact of this notice on minorities, women, and persons with disabilities. Therefore, to better ensure that these groups and others are made aware of this meeting, FSIS will announce it and provide copies of the **Federal Register** publication in the FSIS Constituent Update.

The Agency provides a weekly FSIS Constituent Update, which is communicated via fax to over 300 organizations and individuals. In addition, the update is available on line through the FSIS Web page located at *http://www.fsis.usda.gov.* The update is used to provide information regarding Agency policies, procedures, regulations, **Federal Register** Notices, FSIS public meetings, recalls and any other types of information that could affect or would be of interest to our constituents/stakeholders. The constituent fax list consists of industry, trade, and farm groups, consumer interest groups, allied health professionals, scientific professionals and other individuals that have requested to be included. Through these various channels, the Agency is able to provide information with a much broader, more diverse audience.

For more information and to be added to the constituent fax list, fax your request to the Office of Congressional and Public Affairs, at (202) 720–5704.

Done at Washington, DC, on March 6, 2002.

F. Edward Scarbrough,

U.S. Manager for Codex Alimentarius.

[FR Doc. 02–5761 Filed 3–8–02; 8:45 am]

BILLING CODE 3410–DM–P

DEPARTMENT OF AGRICULTURE

Forest Service

Red Star Restoration; Tahoe National Forest, Placer County, CA

AGENCY: Forest Service, USDA.

ACTION: Notice of intent to prepare an environmental impact statement.

SUMMARY: The Star Fire burned 16,600 acres in August and September 2001, on the Tahoe and Eldorado National Forests. Of the total fire, approximately 9,478 acres of National Forest System (NFS) land burned on the Foresthill Ranger District of the Tahoe National Forest. The USDA, Forest Service, Tahoe National Forest will prepare an environmental impact statement (EIS) on a proposal to reduce the fuel loading by removing fire-killed trees on approximately 7,700 acres on the Foresthill Ranger District as a result of the Star Fire. The Eldorado National Forest is preparing a separate environmental impact statement for

NFS land burned on the Eldorado titled Star Fire Restoration (February 2001). Both EISs will address cumulative effects of the projects.

The purpose of the project is to manage predicted surface fuel accumulations resulting from fire-killed trees and vegetation to move the conditions towards natural fire regimes more rapidly, re-establish forest vegetation to restore old forest characteristics and wildlife habitat, restore riparian and upslope areas and improve current conditions, initiate restoration of the scenery and recreation experience, operate and manage the road system necessary to provide access, and capture the value of fire-killed trees in order to obtain revenue for restoration activities. These actions are required to reduce the risk of uncharacteristic wildfire effects and to establish forest vegetation to restore the old forest dependent wildlife habitats.

DATES: Comments concerning the scope and implementation of this proposal should be received by April 8, 2002.

ADDRESSES: Send written comments to Karen Jones, Red Star Restoration Project Leader, Tahoe National Forest, 22830 Foresthill Rd, Foresthill, CA 95631 or e-mail to: *karenjones@fs.fed.us.*

FOR FURTHER INFORMATION CONTACT: Questions and comments about this EIS should be directed to Karen Jones, at the above address, or call her at 530–367–2224.

SUPPLEMENTARY INFORMATION: Approximately 4,363 acres of the 9,478 acres that burned on the Star Fire within the Tahoe National Forest are within the Duncan Canyon Inventoried Roadless Area (IRA). The goal of this project is to maintain the existing un-roaded character within the Duncan Canyon IRA and reduce fire-killed fuel accumulations utilizing helicopter-yarding systems.

The Tahoe National Forest Land and Resource Management Plan (1990) and the Sierra Nevada Framework Plan Amendment (2001) identifies the desired land allocations for this area as Inventoried Roadless Area (4,363 acres), California spotted owl Protected Activity Centers (PACs) (1,120 acres), Northern goshawk PACs (730 acres), Old Forest Emphasis Areas (7,618 acres), Home Range Core Areas (2,145 acres), Defense Zone (316 acres), Threat Zone (1,985 acres), and General Forest (224 acres). Many of the acres overlap due to shared allocations. Each allocation has a set of standards and guidelines that determine how management would proceed within the allocation. The proposed action is designed to be consistent with the 1990 Tahoe National Forest Land and Resource Management Plan as amended by the Sierra Nevada Forest Plan Amendment Record of Decision.

The Interdisciplinary Team has defined fire-killed trees as trees that have dead (black or brown) crowns. This approach was used to ensure that only dead, fire-killed trees would be considered for removal. Approximately 3,700 acres of trees are dead. Stands that meet the stand replacement criteria are areas with greater than 75% mortality based on stand basal area and considered in the proposed action. Based on field inventories conducted in the fall of 2001, stand replacement is predicted to occur during the next 1–3 years on an additional 4,000 acres. These acres would be monitored and no burned trees would be removed until the stand meets the stand replacement criteria and the fire-killed definition (dead-crown criteria) mentioned above.

The proposed action is to:

1. Cut and remove dead materials greater than one-inch diameter at breast height (dbh) that is excess to the desired condition for fuels reduction, wildlife retention, and other resource needs. Remove commercial material and ground-based equipment on approximately 382 acres; with skyline yarding systems on approximately 305 acres; and by helicopter yarding systems on approximately 2,417 acres. Approximately 1,033 acres of those proposed for helicopter yarding lie within the Duncan Canyon IRA. An additional 1,060 acres of mechanical fuel treatment (piling, hand felling and piling, crushing, mastication) of smaller diameter material is proposed.

2. Reforest conifer stand with greater than 75 percent mortality by planting approximately 3,369 acres of conifer seedlings.

3. Provide soil cover by lopping and scattering limbs and tops of fire-killed trees that are removed.

4. Exclude the removal of fire-killed trees from within 50 feet of the apparent high water mark of perennial streams and within 25 feet of seasonally flowing streams. Outside of these limits, but within the Riparian Conservation Area (RCA) boundaries, remove fire-killed trees by helicopter yarding.

5. Cut and remove imminent hazard trees along approximately 11 to 13 miles of the Western States and Tevis Cup Trails.

6. Perform maintenance and repairs on 44 (about 52 miles) of NFS roads. Decommission approximately 11 miles of 22 National Forest System roads after fire restoration work. Three of the roads (for approximately 1.2 miles) are within the Duncan Canyon IRA.

The decision to be made is whether to implement fuel reduction treatments to restore desirable characteristics of the ecosystem composition and structure (Old Forest characteristics) as proposed or to take no action. Alternatives to this proposal would be developed based on significant issues identified during the scoping process for the environmental impact statement. Alternatives being considered at this time include: (1) No Action and (2) the Proposed Action.

Public participation is important during the analysis. The Forest Service will be seeking information, comments, and assistance from the Federal, State, and local agencies and other individuals or organizations that may be interested in or affected by the proposed action. To facilitate public participation, information about the proposed action is being mailed to all who have expressed interest in the proposed action based on publication in the Tahoe National Forest Quarterly Schedule of Proposed Actions and by notifying the public during the scoping period by publishing a notice in the Auburn Journal, Auburn, CA and The Union, Grass Valley, CA.

Comments submitted during the scoping process should be in writing, and should be specific to the proposed action. The comments should describe as clearly and completely as possible any issues the commenter has with the proposal. The scoping process includes:

(a) Identifying potential issues;

(b) Identifying issues to be analyzed in depth;

(c) Eliminating non-significant issues or those previously covered by a relevant previous environmental analysis;

(d) Exploring additional alternatives;

(e) Identifying potential environmental effects of the proposed action and alternatives.

The draft EIS is expected to be filed with the Environmental Protection Agency (EPA) and to be available for public review by April 2002. EPA will publish a notice of availability of the draft EIS in the **Federal Register**. The comment period on the draft EIS will be 45 days from the date the EPA notice appears in the **Federal Register**. At that time, copies of the draft EIS will be distributed to interested and affected agencies, organizations, and members of the public for their review and comment. It is very important that those interested in the management of the Tahoe National Forest participate at that time.

The Forest Service believes it is important to give reviewers notice at

this early stage of several court rulings related to public participation in the environmental review process. First, reviewers of a draft EIS must structure their participation in the environmental review of the proposal so that it is meaningful and alerts an agency to the reviewer's position and contentions, *Vermont Yankee Nuclear Power Corp.* v. *NRDC, 435 U.S. 519, 553 (1978).* Also, environmental objections that could be raised at the draft EIS stage, but that are not raised until after completion of the final EIS may be waived or dismissed by the courts, *City of Angoon* v. *Hodel, 803f, 2d 1016, 1022 (9th Cir, 1986)* and *Wisconsin Heritages, Inc.* v. *Harris, 490 F. Supp. 1334, 1338 (E.D. Wis. 1980).* Because of these court rulings, it is very important that those interested in this proposed action participate by the close of the comment period so that substantive comments and objections are made available to the Forest Service at a time when it can meaningfully consider them and respond to them in the final EIS.

To assist the Forest Service in identifying and considering issues and concerns on the proposed action, comments on the proposed action should be as specific as possible. It is also helpful if comments refer to specific pages or chapters of the proposed action. Comments may also address the adequacy of the proposed action or the merits of the alternatives formulated and discussed in the statement. (Reviewers may wish to refer to the Council on Environmental Quality Regulations for implementing the procedural provisions of the National Environmental Policy Act at 40 CFR 1503.3 in addressing these points).

The final EIS would be completed in July 2002. In the final EIS, the Forest Service is required to respond to substantive comments received during the comment period that pertain to the environmental consequences discussed in the draft EIS and applicable laws, regulations, and policies considered in making the decision regarding this proposal.

Steven T. Eubanks, Forest Supervisor, Tahoe National Forest is the responsible official. As the responsible official he will document the decision and reasons for the decision in the Record of Decision. That decision will be subject to Forest Service appeal regulations (36 CFR part 215).

Dated: March 5, 2002.

Steven T. Eubanks,

Forest Supervisor.

[FR Doc. 02–5773 Filed 3–8–02; 8:45 am]

BILLING CODE 3410–11–M

DEPARTMENT OF AGRICULTURE

Forest Service

Colville Resource Advisory Committee (RAC); Meeting

AGENCY: Forest Service, USDA.

ACTION: Notice of meeting.

SUMMARY: The Colville Resource Advisory Council will meet on Thursday, March 21, 2002 at the Spokane Community College, Colville Campus Room 107 at 985 S. Elm Street, Colville, Washington. The meeting will begin at 9 a.m. and conclude at 4 p.m.

Agenda items include: (1) Review, modify and approve minutes from February meeting; (2) review and recommend Title II Projects to be submitted to the forest designated official; (3) review and approve the RAC Communication Plan; and (4) develop agenda for next meeting.

FOR FURTHER INFORMATION CONTACT: Direct questions regarding this meeting to designated federal official, Nora Rasure or Cynthia Reichelt, Public Affairs Officer, Colville National Forest, 765 S. Main, Colville, Washington 99114, (509) 684–7000.

Dated: March 1, 2002.

Nora B. Rasure,

Forrest Supervisor.

[FR Doc. 02–5700 Filed 3–8–02; 8:45 am]

BILLING CODE 3410–11–M

DEPARTMENT OF AGRICULTURE

Forest Service

Siskiyou County Resource Advisory Committee

AGENCY: Forest Service, USDA.

ACTION: Notice of meeting.

SUMMARY: The Siskiyou County Resource Advisory Committee (RAC) will meet on March 18, 2002, in Yreka, California. The purpose of the meeting is to discuss the following topics: Contracts, implementation on private lands versus public; Develop a tool for feedback to applicants; Invited back proponents, presentation or/and site visits; Non-approved or multi-year projects; Develop a progress report for dollars allocated; Decide funding mechanism; Monitoring design; and Overhead Rate.

March 25, 2002 meeting will be review and rating of local proposals.

DATES: The meetings will be held March 18, 2002 from 3 p.m. to 6 p.m. and March 25, 2002 from 9 a.m. to 3 p.m.

ADDRESSES: The meeting will be held at the Miners Inn and Convention Center, 122 E. Miner Street, Yreka, California.

FOR FURTHER INFORMATION CONTACT: Heidi Perry, Meeting Coordinator, USDA, Klamath National Forest, 1312 Fairlane Road, Yreka, California 96097, (530) 841–4468; e-mail: *hperry@fs.fed.us.*

SUPPLEMENTARY INFORMATION: Agenda items to be covered include: (1) Roles and Responsibilities for Advisory Committees; (2) Critic Public Proposal Workshop; (3) Project Submittal Process; (4) Project Timelines and (5) Public Comment. The meeting is open to the public. Public input opportunity will be provided and individuals will have the opportunity to address the Committee at that time.

Dated: March 5, 2002.

Margaret J. Boland,

Forest Supervisor.

[FR Doc. 02–5701 Filed 3–8–02; 8:45 am]

BILLING CODE 3410–11–M

DEPARTMENT OF AGRICULTURE

Forest Service

Central Idaho Resource Advisory Committee, Salmon-Challis National Forest, Butte, Custer, and Lemhi Counties, ID

AGENCY: Forest Service, USDA.

ACTION: Notice of meeting of the Resource Advisory Committee.

SUMMARY: The Central Idaho Resource Advisory Committee will meet at 1 p.m., March 20, 2002 at the Custer County Courthouse, 4th and Main, Challis, Idaho.

The 15-member committee will establish procedures for evaluating proposed projects and for recommending projects to the Salmon-Challis National Forest. The committee will also discuss individual project proposals for 2002. The meeting is open to the public and time will be scheduled for public comments.

The Central Idaho Resource Advisory Committee was established by the Secretary of Agriculture under Title II of the Secure Rural Schools and Community Self-Determination Act of 2000 to work collaboratively with the Salmon-Challis National Forest to provide advice and recommendations consistent with the purposes of the Act.

George P. Matejko,

Forest Supervisor, Salmon-Challis National Forest, Designated Federal Official.

[FR Doc. 02–5774 Filed 3–8–02; 8:45 am]

BILLING CODE 3410–11–M

DEPARTMENT OF AGRICULTURE

Natural Resources Conservation Service

Shammack Creek Watershed, Kemper County, MS

AGENCY: Natural Resources Conservation Service.

ACTION: Notice of a finding of no significant impact.

SUMMARY: Pursuant to section 102(2) (C) of the National Environmental Policy Act of 1969; the Council on Environmental Quality Regulations (40 CFR part 1500); and the Natural Resources Conservation Service Regulations (7 CFR part 650); the Natural Resources Conservation Service, U.S. Department of Agriculture, gives notice that an environmental impact statement is not being prepared for Shammack Creek Watershed, Kemper County, Mississippi.

FOR FURTHER INFORMATION CONTACT: Homer L. Wilkes, State Conservationist, Natural Resources Conservation Service, Suite 1321, A.H. McCoy Federal Building, 100 West Capitol Street, Jackson, Mississippi 39269, telephone 601–965–5205.

SUPPLEMENTARY INFORMATION: The environmental assessment of this Federal assisted action indicates that the project will not cause significant local, regional, or national impacts on the environment. As a result of these findings, Homer L. Wilkes, State Conservationist has determined that the preparation and review of an environmental impact statement are not needed for this project.

The project concerns a watershed plan to provide supplemental flood protection and reduce threat to loss of life from sudden dam failure to the residents of the Shammack Creek Watershed and others. The planned works of improvement consists of rehabilitating floodwater retarding structure (FWRS) No. 2. The Notice of a Finding of No Significant Impact (FONSI) has been forwarded to the Environmental Protection Agency and to various Federal, State, and local agencies and interested parties. A limited number of copies of the FONSI are available to fill single copy requests at the above address. Basic data developed during the environmental assessment are on file and may be reviewed by contacting Homer L. Wilkes. No administrative action on implementation of the proposal will be taken until 30 days after the date of this publication in the **Federal Register**.

(This activity is listed in the Catalog of Federal Domestic Assistance under No. 10.904—Watershed Protection and Flood Prevention and is subject to the provisions of Executive Order 12372 which requires intergovernmental consultation with State and local officials.)

Dated: February 11, 2002.

Homer L. Wilkes,

State Conservationist.

[FR Doc. 02–5752 Filed 3–8–02; 8:45 am]

BILLING CODE 3410–16–P

DEPARTMENT OF AGRICULTURE

Rural Utilities Service

East Kentucky Power Association; Notice of Finding of No Significant Impact

AGENCY: Rural Utilities Service, USDA.

ACTION: Notice of finding of no significant impact.

SUMMARY: Notice is hereby given that the Rural Utilities Service (RUS) has made a finding of no significant impact with respect to the construction and operation of two, 268 megawatt coal-fired electric generation units in Mason County, Kentucky. East Kentucky Power Association proposes to construct and operate the units. The Rural Utilities Service (RUS) may provide financing for the two units.

FOR FURTHER INFORMATION CONTACT: Bob Quigel, Environmental Protection Specialist, Engineering and Environmental Staff, RUS, Stop 1571, 1400 Independence Avenue, SW, Washington, DC 20250–1571, telephone (202) 720–0468, e-mail at *bquigel@rus.usda.gov.*

SUPPLEMENTARY INFORMATION: East Kentucky Power Cooperative proposes to construct two, 268-megawatt coal fired electric generation units at its Spurlock Station in Maysville, Kentucky. Maysville is located in Mason County along the Ohio River. The two new generation units are to be named Gilbert Units 3 and 4. The units would consist of two circulating fluidized bed boilers, two turbine-generators, two baghouses, two sulfur dioxide removal systems, two selective non-catalytic reduction units, and two 720-foot stacks. The project would also include a double-circuit 345-kilovolt transmission line from the Spurlock Station to an existing 345-kV transmission line in Brown County, Ohio. The length of the transmission line would be approximately 3.5 miles and would parallel an existing 138 kV transmission line that crosses the Ohio River. Further details of the project are provided in the environmental assessment.

Copies of the Finding of No Significant Impact are available from RUS at the address provided herein or from Mr. Bob Hughes of East Kentucky Power Association, P.O. Box 707, Winchester, Kentucky 40391; telephone (859) 744–4812 Mr. Hughes's e-mail address is *bobh@ekpc.com.* Copies of the environmental assessment are available for review at East Kentucky Power Association and RUS at the addresses provided herein.

Dated: March 4, 2002.

Blaine D. Stockton,

Assistant Administrator, Electric Program, Rural Utilities Service.

[FR Doc. 02–5685 Filed 3–8–02; 8:45 am]

BILLING CODE 3410–15–P

DEPARTMENT OF AGRICULTURE

Rural Utilities Service

Georgia Transmission Corporation; Notice of Finding of No Significant Impact

AGENCY: Rural Utilities Service, USDA.

ACTION: Notice of finding of no significant impact.

SUMMARY: Notice is hereby given that the Rural Utilities Service (RUS) has made a finding of no significant impact (FONSI) with respect to a request from Georgia Transmission Corporation for assistance from the RUS to finance the construction of a 230/115 kV transmission line in Gwinnett and Hall Counties, Georgia.

FOR FURTHER INFORMATION CONTACT: Bob Quigel, Environmental Protection Specialist, Engineering and Environmental Staff, RUS, Stop 1571, 1400 Independence Avenue, SW., Washington, DC 20250–1571, telephone (202) 720–0468, fax (202) 720–0820, e-mail at *bquigel@rus.usda.gov.*

SUPPLEMENTARY INFORMATION: Georgia Transmission Corporation proposes to construct a 230 kV electric transmission line from the Spout Springs Road Substation to be located in Hall County 2000 feet East of the intersection of Williams Road and Spout Springs Road, and traverse southwest paralleling an existing Georgia Power Company 500 kV transmission line for approximately 4 miles. Approximately ½ mile of this line will deviate from the existing right-of-way to minimize impacts to local residences. The right-of-way for this portion of the transmission line will be widened 100 feet. At about ½ mile southwest of Hamilton Mill Road in Gwinnett County the transmission line

will turn to the northwest on an existing Georgia Power Company 115 kV transmission line right-of-way for approximately 5 miles. The existing 115 kV transmission line will be reconstructed as an underbuild of the 230 kV transmission line. (The 230 kV and 115 kV transmission lines would share the same transmission line support structures.) The existing right-of-way will not need to be widened. The transmission line would then turn to the southwest on a new right-of-way along Peachtree Industrial Boulevard for approximately 1.6 miles to the Shoal Creek Substation to be located in Gwinnett County southwest of the intersection of Tuggle Greer Road and Peachtree Industrial Boulevard. (Georgia Power Company will construct the Shoal Creek Substation.) The new right-of-way will be forty (40) feet in width. This portion of the transmission line will also be underbuilt with a 115 kV transmission line. Both the 230 kV and the 115 kV transmission lines will connect to the Shoal Creek Substation. The portion of the 230 kV transmission line to parallel the 500 kV transmission line will be supported by single pole concrete structures. The 230 kV portion of the transmission line to be underbuilt with the 115 kV transmission line will be supported by single pole steel or concrete structures. It is anticipated that the transmission lines will be completed and energized by May 2003.

Copies of the FONSI are available for review at, or can be obtained from, RUS at the address provided herein or from Ms. Wende Martin, Georgia Transmission Corporation, 2100 East Exchange Place, Tucker, Georgia 30085–2088, telephone (770) 270–7591. Ms. Martin's e-mail address is *wende.martin@gatrans.com.*

Dated: March 5, 2002.

Blaine D. Stockton,

Assistant Administrator, Electric Program, Rural Utilities Service.

[FR Doc. 02–5734 Filed 3–8–02; 8:45 am]

BILLING CODE 3410–15–P

DEPARTMENT OF AGRICULTURE

Rural Utilities Service

Distance Learning and Telemedicine Loan and Grant Program

AGENCY: Rural Utilities Service, USDA.

ACTION: Notice of application filing deadline.

SUMMARY: The Rural Utilities Service (RUS) announces its Distance Learning and Telemedicine Program application window for funding during fiscal year (FY) 2002. For FY 2002, $27 million in grants and $300 million in loans will be made available for distance learning and telemedicine projects serving rural America. The funding will be provided in three categories: (1) $17 million will be available for grants; (2) $200 million will be available for loans; and (3) $110 million will be available for combination grants and loans ($100 million in loans paired with $10 million in grants, *i.e.,* $10 loan: $1 grant ratio).

DATES: Applications for grants must be postmarked no later than May 13, 2002. Applications for FY 2002 loans or combination loans and grants may be submitted at anytime up to August 31, 2002, and will be processed on a first-come, first serve basis.

ADDRESSES: Applications are to be submitted to the Rural Utilities Service, U.S. Department of Agriculture, 1400 Independence Avenue, SW., STOP 1550, Washington, DC 20250–1550. Applications should be marked ''Attention: Director, Advanced Services Division, Telecommunications Program.''

FOR FURTHER INFORMATION CONTACT: Marilyn J. Morgan, Branch Chief, Distance Learning and Telemedicine Branch, U.S. Department of Agriculture, Rural Utilities Service, STOP 1550, Room 2838, South Building, 1400 Independence Avenue, SW., Washington, DC 20250–1550. Telephone: (202) 720–0413, FAX: (202) 720–1051.

SUPPLEMENTARY INFORMATION: For FY 2002, $17 million in grants, a combination of $10 million in grants paired with $100 million in loans, and $200 million in loans will be made available for distance learning and telemedicine projects. RUS encourages early submission of grant applications to determine whether all required items specified in 7 CFR 1703.125 are clearly in form, identifiable, and complete. RUS will examine, provide comment, and return applications that include items that would disqualify them from further consideration for modification if they are submitted by Friday, April 12, 2002. All applications for grants must be postmarked no later than Monday, May 13, 2002, to be eligible for FY 2002 grant funding. Each application will be reviewed for completeness in accordance with 7 CFR part 1703, subparts D, E, F, and G. Ineligible applications will be returned within 15 working days of receipt.

Notice is hereby given that under 7 CFR 1703.124, 1703.133, and 1703.143, RUS has determined the maximum amount of an application for a grant that will be considered for funding in FY 2002 as $500,000. The maximum amount for a loan, generally, that will be considered for funding in FY 2002 is $10 million. However, RUS may fund a project greater than $10 million subject to the project's feasibility and the availability of loan funds.

Applications for financial assistance must be submitted in accordance with 7 CFR part 1703, subparts D, E, F, and G, which establish the policies and procedures for submitting an application for financial assistance. These subparts and an application guide to assist in the preparation of applications are available on the Internet at the following address: *http://www.usda.gov/rus/telecom/dlt/dltpublications.htm.* Application guides may also be requested from RUS by contacting the Distance Learning and Telemedicine Branch, USDA–RUS, Phone: (202) 720–0413.

Dated: March 4, 2002.

Hilda Gay Legg,

Administrator, Rural Utilities Service.

[FR Doc. 02–5732 Filed 3–8–02; 8:45 am]

BILLING CODE 3410–15–P

DEPARTMENT OF COMMERCE

Bureau of Export Administration

Action Affecting Export Privileges; Infocom Corporation, Inc., Tetrabal Corporation, Ihsan Medhat ''Sammy'' Elashi, Also Known as I. Ash and Haydee Herrera and Doing Business as Kayali Corp.; Abdulah Al Nasser, Maysson Al Kayali, Mynet. Net Corp. Bayan Medhat Elashi, Ghassan Elashi, Basman Medhat Elashi, Hazim Elashi, Fadwa Elafrangi; Renewal of Order Temporarily Denying Export Privileges

In the Matter of: Infocom Corporation, Inc., 630 International Parkway, Suite 100, Richardson, Texas 75081; Tetrabal Corporation, Inc., 605 Trail Lake Drive, Richardson, Texas 75081, and 908 Audelia Road, Suite 200, PMB #245, Richardson, Texas 75081, and Ihsan Medhat ''Sammy'' Elashi also known as: I. Ash and Haydee Herrera, and doing business as Kayali Corp., 605 Trail Lake Drive, Richardson, Texas 75081 and 908 Audelia Road, Suite 200, PMB #245, Richardson, Texas 75081; Respondents Abdulah Al Nasser, 605 Trail Lake Drive, Richardson, Texas 75081 and 908 Audelia Road, Suite 200, PMB #245, Richardson, Texas 75081; Maysoon Al Kayali, 605 Trail Lake Drive, Richardson, Texas 75081 and 908 Audelia Road, Suite 200, PMB #245, Richardson, Texas 75081; Mynet.Net Corp, Richardson, Texas 75081 and 908 Audelia Road, Suite 200, PMB #245, Richardson, Texas 75081; Bayan Medhat Elashi, 1810 Auburn, Richardson, Texas 75081; Ghassan Elashi, 304 Town House Lane, Richardson, Texas 75081; Basman Medhat Elashi, 1506

Willow Crest Drive, Richardson, Texas 75081; Hazim Elashi, 937 Stone Trail Drive, Plano, Texas 75023; Fadwa Elafrangi, 306 Town House Lane, Richardson, Texas 75081; Related persons.

Through the Office of Export Enforcement (''OEE''), the Bureau of Export Administration (''BXA''), United States Department of Commerce, has asked me to renew and modify the order pursuant to Section 766.24 of the Export Administration Regulations (currently codified at 15 CFR parts 730–774 (2001)) (''EAR'' or ''Regulations''),[1] temporarily denying all United States export privileges to Infocom Corporation, Inc., 630 International Parkway, Suite 100, Richardson, Texas 75081 (''Infocom'') that was issued on September 6, 2001.[2] BXA has asked that I modify the order by naming Tetrabal Corporation, Inc. (''Tetrabal'') and Ihsan Medhat ''Sammy'' Elashi (''Ihsan Elashi'') as respondents rather than related persons, and that I list modified addresses and aliases as set out in the caption of this order. Further, BXA has asked that I add the following related persons: Abdulah Al Nasser; Maysoon Al Kayali; and Mynet.Net Corp, all with addreses at: 605 Trail Lake Drive, Richardson, Texas 75081 and 908 Audelia Road, Suite 200, PMB #245, Richardson, Texas 75081.

In its request, BXA states that, based upon the evidence previously adduced and the continuing investigation by OEE, BXA believes that Infocom, Tetrabal, and Ihsan Elashi have violated the Regulations by shipping and attempting to ship goods to Libya and Syria without obtaining the necessary authorizations from BXA and further violated the Regulations by shipping goods in violation of the original denial order. Since the September 6 order, Ihsan Elashi has made at least 10 exports of computer equipment that violated the order. Abdulah Al Nasser and Maysoon Al Kayali assisted Ihsan Elashi in making some of these exports in violation of the denial order. Additionally, Ihsan Elashi used Mynet.net as the exporter for at least one of the shipments. In several of these exports, Ihsan Elashi used concealment and subterfuge to attempt to conceal his exports which violated the terms of the September 6 order.

The Assistant Secretary for Export Enforcement previously found the TDO was consistent with the public interest to preclude future violations of the Regulations. I find that the need for the TDO continues. The evidence that Infocom commited repeated violations of the Regulations that were deliberate and covert, that it actively sought to engage in further export transacitons, that, given the nature of the items shipped, future violations could go undetected makes it necessary to give notice to companies in the United States and abroad that they should cease dealing with the respondents in export transactions involving U.S.-origin items, and that Infocom has continued doing business with Ihsan Elashi and Tetrabal. The need for the continuation of the TDO and the naming of Ihsan Elashi and Tetrabal as denied persons is also established by the flagrant violations of the order that have ocurred more recently. A TDO that also names Ihsan Elashi and Tetrabal is clearly consistent with the public interest to preclude future violations of the Regulations.

Accordingly, I am renewing this order with the amendments requested by BXA because I have concluded that a TDO is necessary, in the public interest, to prevent an imminent violation of the Regulations.

It is therefore ordered: First, that Infocom Corporation, Inc., 630 International Parkway, Suite 100, Richardson, Texas 75081, Tetrabal Corporation, Inc., 605 Trail Lake Drive, Richardson, Texas 75081 and 908 Audelia Road, Suite 200, PMB #245, Richardson, Texas 75081, and Ihsan Medhat ''Sammy'' Elashi, also known as I. Ash and Haydee Herrera, same addresses as Tetrabal, (collectively, ''the denied persons'') and the following persons subject to the order by their relationship to the denied person Bayan Medhat Elashi, 810 Auburn, Richardson, Texas 75081; Ghassan Elashi, 304 Town House Lane, Richardson, Texas 75081; Basman Medhat Elashi, 1506 Willow Crest Drive, Richardson, Texas 75081; Hazim Elashi, 937 Stone Trail Drive, Plano, Texas 75023; Fadwa Elafrangi; 306 Town House Lane; Richardson, Texas 75081, and Abdulah Al Nasser, Maysoon Al Kayali, and Mynet.net Corp, all three at the same addresses as Tetrabal, (''the related persons'') (together, the denied person and the related persons are ''persons subject to this order'') may not, directly or indirectly, participate in any way in any transaction involving any commodity, software or technology (hereinafter collectively referred to as ''item'') exported or to be exported from the United States that is subject to the Export Administration Regulations (EAR), or in any other activity subject to the EAR, including, but not limited to:

A. Applying for, obtaining, or using any license, License Exception, or export control document;

B. Carrying on negotiations concerning, or ordering, buying, receiving, using, selling, delivering, storing, disposing of, forwarding, transporting, financing, or otherwise servicing in any way, any transaction involving any item exported or to be exported from the United States that is subject to the EAR, or in any other activity subject to the EAR; or

C. Benefiting in any way from any transaction involving any item exported or to be exported from the United States that is subject to the EAR, or in any other activity subject to the EAR.

Second, that no person may, directly or indirectly, do any of the following:

A. Export or reexport to or on behalf of a person subject to this order any item subject to the EAR;

B. Take any action that facilities the acquisition or attempted acquisition by a person subject to this order of the ownership, possession, or control of any item subject to the EAR that has been or will be exported from the United States, including financing or other support activities related to a transaction whereby a person subject to this order acquires or attempts to acquire such ownership, possession or control;

C. Take any action to acquire from or to facilitate the acquisition or attempted acquisition from a person subject to this order of any item subject to the EAR that has been exported from the United States;

D. Obtain from a person subject to this order in the United States any item subject to the EAR with knowledge or reason to know that the item will be, or is intended to be, exported from the United States; or

E. Engage in any transaction to service any item subject to the EAR that has been or will be exported from the United States and which is owned,

[1] The Regulations were issued pursuant to the Export Administration Act of 1979 (''Act''), 50 U.S.C. app. sections 2401–2420 (1994 & Supp. IV 1998), as reauthorized by Act of November 13, 2000, Pub. L. 106–508, 114 Stat. 2360. The Act lapsed on August 20, 2001. Pursuant to the International Emergency Economic Powers Act (50 U.S.C. 1701–1706 (1994 & Supp. IV 1998)), the President, through Executive Order 13222 of August 17, 2001 (66 FR 44025 (August 22, 2001)), has continued the Regulations in force.

[2] On February 27, 2002, Counsel for Infocom filed Opposition of Infocom Corporation, Inc., Bayan Medhat Elashi, Ghassan Elashi and Basman Medhat Elashi (''The Three Brothers'') to Renewal of Order Temporarily Denying Export Privileges. On March 1, 2002, counsel for OEE filed ''Response to Opposition of Infocom Corporation, Inc, *et al.* to Renewal Order Temporarily Denying Export Privileges (TDO)'' (''OEE Response''). The OEE Response argues that The Three Brothers lack standing because they are ''Related Persons'' in the September 6th Order and, as such, may not oppose Renewal of the Order. OEE cites § 766.2(3)(c) of the EAR as authority for its position. I find the arguments raised by OEE on this issue, both in its pleadings and at oral argument, to be persuasive. Only Infocom has standing to oppose Renewal of the TDO.

possessed or controlled by a person subject to this order, or service any item, of whatever origin, that is owned, possessed or controlled by a person subject to this order if such service involves the use of any item subject to the EAR that has been or will be exported from the United States. For purposes of this paragraph, servicing means installation, maintenance, repair, modification or testing.

Third, that, in addition to the related persons named above, after notice and opportunity for comment as provided in section 766.23 of the EAR, any other person, firm, corporation, or business organization related to the denied person by affiliation, ownership, control, or position of responsibility in the conduct of trade or related services may also be made subject to the provisions of this order.

Fourth, that this order does not prohibit any export, reexport, or other transaction subject to the EAR where the only items involved that are subject to the EAR are the foreign-produced direct product of U.S.-origin technology.

In accordance with the provisions of Section 766.24(e) of the Regulations, Infocom, Tetrabal, or Ihsan Elashi may, at any time, appeal this Order by filing a full written statement in support of the appeal with the Office of the Administrative Law Judge, U.S. Coast Guard ALJ Docketing Center, 40 South Gay Street, Baltimore, Maryland 21202–4022. A related person may appeal to the Administrative Law Judge at the aforesaid address in accordance with the provisions of Section 766.23(c) of the Regulations.

This Order is effective on March 4, 2002 and shall remain in effect for 180 days.

In accordance with the provisions of Section 766.24(d) of the Regulations, BXA may seek renewal of this Order by filing a written request not later than 20 days before the expiration date. Infocom, Tetrabal, or Ihsan Elashi may oppose a request to renew this Order by filing a written submission with the Assistant Secretary for Export Enforcement, which must be received not later than seven days before the expiration date of the Order.

A copy of this Order shall be served on Infocom, Tetrabal, and Ihsan Elashi and each related person and shall be published in the **Federal Register.**

Entered this 4th day of March, 2002.

Lisa A. Prager,

Acting Assistant Secretary for Export Enforcement.

[FR Doc. 02–5676 Filed 3–8–02; 8:45 am]

BILLING CODE 3510–DT–M

DEPARTMENT OF COMMERCE

International Trade Administration

[A–570–852]

Creatine Monohydrate From the People's Republic of China; Final Results of Antidumping Duty Review

AGENCY: Import Administration, International Trade Administration, Department of Commerce.

ACTION: Notice of final results of antidumping duty review.

SUMMARY: On November 6, 2001, the Department of Commerce published the preliminary results of the administrative review of the antidumping duty order on creatine monohydrate from the People's Republic of China. We gave interested parties an opportunity to comment. Based upon our analysis of the comments and information received, we have made changes to the margin calculations presented in the final results of the review. We find that creatine monohydrate from the People's Republic of China was not sold in the United States below normal value.

EFFECTIVE DATE: March 11, 2002.

FOR FURTHER INFORMATION CONTACT: Blanche Ziv, Import Administration, International Trade Administration, U.S. Department of Commerce, 14th and Constitution Avenue, NW., Washington, DC 20230; telephone (202) 482–4207.

SUPPLEMENTARY INFORMATION:

The Applicable Statute

Unless otherwise indicated, all citations to the Tariff Act of 1930, as amended (''the Act''), are references to the provisions effective January 1, 1995, the effective date of the amendments made to the Act by the Uruguay Round Agreements Act. In addition, unless otherwise indicated, all citations to the Department of Commerce's (''the Department'') regulations are to 19 CFR part 351 (2000).

Background

On November 6, 2001, the Department published in the **Federal Register** the preliminary results of its administrative review of creatine monohydrate (''creatine'') from the People's Republic of China (''PRC'') (*Creatine Monohydrate from the People's Republic of China; Preliminary Results of Antidumping Duty Administrative Review,* 66 FR 56054 (November 6, 2001) (''*Preliminary Results*''). We received a case brief from the respondent, Blue Science International Trading (Shanghai) Co., Ltd. (''Blue Science''), on December 6, 2001. The petitioners did not submit a case brief.

The Department has now completed the antidumping duty administrative review in accordance with section 751 of the Act.

Scope of Order

The product covered by this order is creatine monohydrate, which is commonly referred to as ''creatine.'' The chemical name for creatine monohydrate is N-(aminoiminomethyl)-N-methylglycine monohydrate. The Chemical Abstracts Service (''CAS'') registry number for this product is 6020–87–7. Creatine monohydrate in its pure form is a white, tasteless, odorless powder, that is a naturally occurring metabolite found in muscle tissue. Creatine monohydrate is provided for in subheading 2925.20.90 of the Harmonized Tariff Schedule of the United States (''HTSUS''). Although the HTSUS subheading and the CAS registry number are provided for convenience and customs purposes, the written description of the scope of this proceeding is dispositive.

Period of Review

The period of review (''POR'') is from July 30, 1999 through January 31, 2001.

Comparisons

We calculated export price and normal value based on the same methodology used in the *Preliminary Results* with the following exceptions:

- We have valued certain inputs using domestic prices in India rather than import prices;
- We have corrected a ministerial error made in valuing one input.

Analysis of Comments Received

All issues raised in Blue Science's case brief are addressed in the March 6, 2002, Issues and Decision Memorandum (''Decision Memorandum'') which is hereby adopted by this notice. Attached to this notice as an appendix is a list of the issues which Blue Science has raised and to which we have responded in the Decision Memorandum. Parties can find a complete discussion of all issues raised in this review and the corresponding recommendations in this public memorandum which is on file in the Central Records Unit, Room B–099 of the Department. In addition, a complete version of the Decision Memorandum can be accessed directly on the Web at *http://ia.ita.doc.gov/frn/summary/list.htm.* The paper copy and electronic version of the Decision Memorandum are identical in content.

Final Results of the Review

We will instruct the Customs Service to liquidate entries of the subject

merchandise from Blue Science during the period July 30, 1999 through January 31, 2001 without regard to antidumping duties. All other entries of the subject merchandise during the POR will be liquidated at the antidumping rate in place at the time of entry.

Furthermore, the following deposit rates will be effective upon publication of these final results for all shipments of creatine from the PRC entered, or withdrawn from warehouse, for consumption on or after the publication date, as provided for by section 751(a)(1) of the Act: (1) For Blue Science, which has a separate rate, no antidumping duty deposit will be required; (2) for a company previously found to be entitled to a separate rate and for which no review was requested, the cash deposit rate will be the rate established in the most recent review of that company; (3) for all other PRC exporters the cash deposit rate will be 128.63 percent, the PRC-wide rate established in the less than fair value (''LTFV'') investigation; and (4) for non-PRC exporters of subject merchandise from the PRC, the cash deposit rate will be the rate applicable to the PRC supplier of that exporter. These deposit rates shall remain in effect until publication of the final results of the next administrative review.

This notice also serves as a final reminder to importers of their responsibility under 19 CFR 351.402(f) to file a certificate regarding the reimbursement of antidumping duties prior to liquidation of the relevant entries during this review period. Failure to comply with this requirement could result in the Secretary's presumption that reimbursement of antidumping duties occurred and the subsequent assessment of double antidumping duties.

This notice also serves as a reminder to parties subject to administrative protective order (''APO'') of their responsibility concerning the disposition of proprietary information disclosed under APO in accordance with 19 CFR 351.305(a)(3). Timely written notification of the return/destruction of APO materials or conversion to judicial protective order is hereby requested. Failure to comply with the regulations and the terms of an APO is a sanctionable violation.

This administrative review and notice are in accordance with sections 751(a)(1) and 777(i)(1) of the Act.

Dated: March 6, 2002.

Faryar Shirzad,

Assistant Secretary for Import Administration.

Appendix

List of Comments in the Issues and Decision Memorandum

Comment 1: Use of Import Prices v. Domestic Prices in India to Value Certain Inputs

Comment 2: Adjusting CIF Import Values to Remove International Freight

Comment 3: Correction of Ministerial Error

[FR Doc. 02–5777 Filed 3–8–02; 8:45 am]

BILLING CODE 3510–DR–P

DEPARTMENT OF COMMERCE

National Oceanic and Atmospheric Administration

[I.D. 030602D]

Antarctic Marine Living Resources Convention Act of 1984; Conservation and Management Measures

AGENCY: National Marine Fisheries Service (NMFS), National Oceanic and Atmospheric Administration (NOAA), Commerce.

ACTION: Final notice.

SUMMARY: At its Twentieth Meeting in Hobart, Tasmania, October 22 to November 2, 2001, the Commission for the Conservation of Antarctic Marine Living Resources (CCAMLR), of which the United States is a member, adopted conservation measures, pending members' approval, pertaining to fishing in the CCAMLR Convention Area in Antarctic waters. These have been agreed upon in accordance with Article IX of the Convention for the Conservation of Antarctic Marine Living Resources (the Convention) and are in effect with respect to the United States.

ADDRESSES: Copies of the CCAMLR measures and the framework environmental assessment may be obtained from the Assistant Administrator for Fisheries, NOAA, National Marine Fisheries Service, 1315 East-West Highway, Silver Spring, MD 20910.

FOR FURTHER INFORMATION CONTACT: Robin Tuttle, 301–713–2282.

SUPPLEMENTARY INFORMATION: See 50 CFR part 300, subpart G—Antarctic Marine Living Resources, and 67 FR 2477 (January 17, 2002).

The measures restrict overall catches and bycatch of certain species of fish, krill, squid, and crab; limit participation in several exploratory fisheries; restrict fishing in certain areas and to certain gear types; set fishing seasons; allow vessels in longline fisheries in Subarea 48.6 south of 60°S to use experimental line-weighting trials; amend and clarify the catch documentation scheme for *Dissostichus* species; amend a previously adopted measure relating to licensing and inspection obligations of Contracting Parties and cooperation between Contracting Parties; and amend a previously adopted measure on the use of automated satellite-linked vessel monitoring systems (VMS) on Contracting Party vessels fishing in the Convention Area.

In addition, the Commission adopted a resolution addressing toothfish harvests questionably attributed to FAO statistical area 51 in the Indian Ocean.

The measures and resolutions were announced by the Department of State by a preliminary notice in the **Federal Register** on January 17, 2002 (67 FR 2477). Public comments were invited, but none were received. Through this notice, NMFS notifies the public that the United States has accepted the measures adopted at CCAMLR's Twentieth meeting, and that pursuant to the Convention and 16 U.S.C. 2431 *et seq.*, these measures are in effect. For the full text of the measures adopted, see 67 FR 2477, January 17, 2002. NMFS provides the following summary of the measures as a courtesy.

The Commission adopted a uniform fishing season of December 1 through November 30 for all Convention area fisheries, except as otherwise specified, e.g., to protect Convention Area species during spawning and breeding seasons. This measure includes a change in the season for krill fishing from the July 1 to June 30 season previously adopted by the Commission.

The Commission prohibited the fishery for *Champsocephalus gunnari* in Statistical Subarea 48.3 within 12 nautical miles of the coast of South Georgia from March 1 to May 31, 2002 during the *C.gunnari* spawning period and adopted a requirement that all fishing vessels taking part in the fishery in the non-restricted area during this period conduct a minimum of 20 research hauls as set out in an annex to the *C. gunnari* conservation measure.

Participation in the Convention Area crab fishery continues to be limited to one vessel per Commission member. Applications for a crab permit must be received no later than 90 days prior to intended harvesting and will be considered in the order of application. If there are multiple applicants, the one U.S. crab permit will be issued on the basis of (1) order of receipt of applications (2) criteria for harvesting permits appearing in 50 CFR 300.112 (3) willingness to participate in CCAMLR

pilot programs and (4) record of previous participation, if any, in the crab fishery. The fishery continues to be managed as previously defined by the Commission with one amendment. The minimum legal carapace width for male *Paralomis spinosissima* was reduced from 102 mm to 94 mm.

The Commission amended the general measures for exploratory fishing for *Dissostichus* spp. to require Members who choose not to participate in an exploratory fishery prior to the commencement of the fishery to inform the Secretariat of changes in their plans no later than 1 month before the start of the fishery. If, for whatever reason, Members are unable to participate in the fishery, they shall inform the Secretariat no later than 1 week after finding that they cannot participate.

The Commission approved several fisheries as exploratory fisheries for the 2001/2002 fishing season. These fisheries are limited total allowable catch (TAC) fisheries and are open only to the flagged vessels of the countries that notified CCAMLR of an interest by participants in the fisheries. The United States was not a notifying country, and, thus, U.S. fishers are not eligible to participate in them.

The exploratory fisheries for *Dissostichus* species (toothfish) are for longline fishing in Statistical Subarea 48.6 by Japan, New Zealand, South Africa and Uruguay; trawl fishing in Statistical Division 58.4.2 by Australia; longline fishing in 58.4.3a (the Elan Bank) outside areas under national jurisdiction by France and Japan; longline fishing in Statistical Division 58.4.3b (the BANZARE Bank) by France and Japan; longline fishing in Statistical Division 58.4.4 by France, Japan, South Africa, and Uruguay; longline fishing in Statistical Subarea 58.6 by Chile, France, Japan and South Africa; longline fishing in Statistical Subarea 88.1 by Japan, New Zealand, Russia and South Africa; longline fishing in Statistical Subarea 88.2 by Japan, New Zealand and South Africa.

The Commission adopted a conservation measure for an exploratory trawl fishery for *Chaenodraco wilsoni*, *Lepidonotothen kempi*, *Trematomus eulepidotus* and *Pleuragramma antarcticum* in Statistical Division 58.4.2, limited to fishing by Australia.

The Commission adopted a conservation measure for a new trawl fishery for *Macrourus* ssp. in Statistical Division 58.4.2, limited to fishing by Australia and amended the conservation measure on the bycatch of *Macrourus* spp. and skates and rays to set upper limits on bycatch and require a vessel to move its fishing position should it catch more than one ton of bycatch species in a longline set or haul.

Although the Commission readopted the conservation measure for jig fishing for *Martialia hyadesi* (squid) in Statistical Subarea 48.3, no Member notified the Commission of its intention to fish in this fishing-by-notification-only fishery.

The Commission revised the conservation measure requiring the use of automated satellite-linked vessel monitoring in all fisheries (except the krill fishery) to require Contracting Parties to provide the Secretariat with limited positional information on movements by vessels in and out of the Convention area and between CCAMLR statistical areas, subareas and divisions. This information, available to Members by operation of the VMS requirement, must be transmitted to the Secretariat within two working days of receiving the required VMS information.

The Commission amended the conservation measure specifying aspects of cooperation among Contracting Parties requiring them to report the details of fishing licenses issued by them.

The Commission adopted a new conservation measure allowing vessels in longline fisheries in Subareas 48.6 south of 60°S to use experimental line-weighting trials in lieu of the Commission's requirement for night setting-only in Convention Area longline fisheries when a vessel can demonstrate prior to licensing its ability to fully comply with one of two trial protocols. The Commission urged two actions with respect to the enforcement of the conservation measure to minimize the incidental mortality of seabirds in the course of longline fishing or longline fishing research. The Commission recommended that vessels equipped or configured such that they are unable to comply with the measure not be allowed to fish in the Convention Area. The Commission further recommended that Members prevent vessels persistently failing to comply with the measure from fishing in the Convention Area.

The Commission revised and clarified the Dissostichus Catch Document (DCD) and created a Catch Documentation Fund (CDF) to receive voluntary contributions from the sale of seized or confiscated toothfish sold pursuant to a Specially Validated DCD (SVDCD). The DCD was revised to clarify procedures for dealing with export verification. The conservation measure creating the CDF includes the provision that, to the extent practicable, Contracting Parties shall ensure that no financial benefit arising from the sale of seized or confiscated catch of toothfish accrue to the perpetrators of illegal, unregulated or unreported fishing for toothfish. Another provision of the measure allows a Contracting Party to, consistent with its domestic legislation, decline to provide a market for toothfish offered for sale with a SVDCD by another State. The Commission also expanded and clarified the use of VMS to verify the area of toothfish harvests. Any Contracting Party, or non-Contracting Party participating in the Catch Documentation Scheme for toothfish, may now require additional verification of catch documents by Flag States by using, *inter alia*, VMS, in respect of catches taken on the high seas outside the Convention Area, when landed at, imported into or exported from its territory. The Commission recognized the need to revise the ''Guide for Completion of Catch Documents'' and requested that the Secretariat revise the Guide as agreed at the annual meeting and make it available on the CCAMLR website to all CCAMLR Members and non-Contracting Parties which have joined CCAMLR in the implementation of the CDS.

CCAMLR adopted a resolution relating to fishing in Food and Agriculture Organization (FAO) statistical area 51. The Commission, concerned that the CDS could be used to disguise IUU catches of toothfish in order to gain legal access to markets, urged States participating in the CDS to ensure that DCDs relating to landings or imports of toothfish, when necessary, are checked by contact with flag states to verify that the information in the DCD is consistent with data reports derived from an automated satellite-linked VMS. The Commission also urged States participating in the CDS, if necessary to that end, to consider reviewing their domestic laws and regulations, with a view to prohibiting, in a manner consistent with international law, landings/transhipments/imports of toothfish declared in a DCD as having been caught in FAO Statistical Area 51, if the flag state fails to demonstrate that it verified the DCD using automated satellite-linked VMS derived data reports.

Authority: 16 U.S.C. 2431 *et seq.*

Dated: March 1, 2002.

Rebecca Lent,

Deputy Assistant Administrator for Regulatory Programs, National Marine Fisheries Service.

[FR Doc. 02–5771 Filed 3–8–02; 8:45 am]

BILLING CODE 3510–22–S

DEPARTMENT OF COMMERCE

National Oceanic and Atmospheric Administration

[I.D. 022602F]

Caribbean Fishery Management Council; Public Meetings

AGENCY: National Marine Fisheries Service (NMFS), National Oceanic and Atmospheric Administration (NOAA), Commerce.

ACTION: Notice of public meetings.

SUMMARY: The Caribbean Fishery Management Council (Council) will hold meetings.

DATES: The meetings will be held on March 26–27, 2002. The Council will convene on Tuesday, March 26, 2002, from 9 a.m. to 6:30 p.m., and on Wednesday, March 27, 2002, from 9 a.m. to 5 p.m., approximately. A public comment period for Dolphin/Wahoo FMP will be open from 1:30 to 2:30 p.m., on March 26, 2002, to allow the general public and interested persons to provide their comments on the Dolphin/Wahoo Fishery Management Plan (FMP)

ADDRESSES: The meetings will be held at the Holiday Inn of Ponce and Tropical Casino, 3315 Ponce By Pass, Ponce, Puerto Rico 00731.

FOR FURTHER INFORMATION CONTACT: Caribbean Fishery Management Council, 268 Muñoz Rivera Avenue, Suite 1108, San Juan, Puerto Rico 00918–2577, telephone (787) 766–5926.

SUPPLEMENTARY INFORMATION: The Council will hold its 107th regular public meeting to discuss the items contained in the following agenda:

Call to Order

Adoption of Agenda

Consideration of 106th Council Meeting Verbatim Minutes

Executive Director's Report

Mr. Gerson Martínez Letter

Special Accommodations

These meetings are physically accessible to people with disabilities. For more information or request for sign language interpretation and other auxiliary aids, please contact Mr. Miguel A. Rolón, Executive Director, Caribbean Fishery Management Council, 268 Muñoz Rivera Avenue, Suite 1108, San Juan, Puerto Rico, 00918–2577, telephone (787) 766-5926, at least five days prior to the meeting date.

Essential Fish Habitat (EFH)

New Regulations - Rickey Reubsamen
NMFS Conservation Habitat
Caribbean Office - L.M. Carrubba

EFH Draft Environmental Impact Statement (DEIS) - MRAG Americas, Inc.

National Ocean Service Benthic Maps of the U.S. Caribbean

Final Presentation

1:30 to 2:30 p.m. - Public Comment Period Dolphin/Wahoo FMP/DEIS

Discussion and Council Decision on Dolphin/Wahoo

Administrative Committee Meeting

Queen Conch FMP Schedule

Sustainable Fisheries Act Update

Fishery Agreements - Department of State

Enforcement

Vessel Monitoring System - F. Kyle
U.S. Coast Guard
Puerto Rico
U.S. Virgin Islands
NMFS

Reeffish FMP

Hyperbaric Chamber and Diving Accidents Report - J. Figueroa
Marine Recreational Fisheries Statistical Survey-Protected Resources Statistics - L.M. Yoshiura
Regulatory Amendment

Recommendations by Administrative Committee at its March 26, 2002 Meeting

Meetings Attended by Council Members and Staff

Other Business

Navassa Island Presentation - U.S. Fish and Wildlife, Department of Interior

Next Council Meeting

The meetings are open to the public, and will be conducted in English. However, simultaneous interpretation (Spanish-English) will be available during the Council meeting on March 26-27, 2002. Fishers and other interested persons are invited to attend and participate with oral or written statements regarding agenda issues.

Although non-emergency issues not contained in this agenda may come before this group for discussion, those issues may not be the subject of formal action during this meeting. Action will be restricted to those issues specifically listed in this notice and any issues arising after publication of this notice that require emergency action under section 305 (c) of the Magnuson-Stevens Fishery Conservation and Management Act, provided the public has been notified of the Council's intent to take final action to address the emergency.

Dated: March 5, 2002.

Richard W. Surdi,

Acting Director, Office of Sustainable Fisheries, National Marine Fisheries Service.

[FR Doc. 02–5618 Filed 3–8–02; 8:45 am]

BILLING CODE 3510–22–S

COMMODITY FUTURES TRADING COMMISSION

Agency Information Collection Activities: Notice of Intent To Renew Collection 3038–0009, Large Trader Reports

AGENCY: Commodity Futures Trading Commission.

ACTION: Notice.

SUMMARY: The Community Futures Trading Commission (CFTC) is announcing an opportunity for public comment on the proposed collection of certain information by the agency. Under the Paperwork Reduction Act of 1995 (PRA), 44 U.S.C. 3501 *et seq.,* Federal agencies are required to publish notice in the **Federal Register** concerning each proposed collection of information, including each proposed extension of an existing collection of information, and to allow 60 days for public comment in response to the notice. This notice solicits comments on large trader reports.

DATES: Comments must be submitted on or before May 10, 2002.

ADDRESSES: Comments may be mailed to Judith E. Payne, Division of Economic Analysis, U.S. Commodity Futures Trading Commission, 1155 21st Street, NW, Washington, DC 20581.

FOR FURTHER INFORMATION CONTACT: Judith E. Payne, (202) 418–5268; FAX: (202) 418–5527; e-mail: *jpayne@cftc.gov*

SUPPLEMENTARY INFORMATION: Under the PRA, Federal agencies must obtain approval from the Office of Management and Budget (OMB) for each collection of information they conduct or sponsor. ''Collection of information'' is defined in 44 U.S.C. 3502(3) and 5 CFR 1320.3(c) and includes agency requests or requirements that members of the public submit reports, keep records, or provide information to a third party. Section 3506(c)(2)(A) of the PRA, 44 U.S.C. 3506(c)(2)(A), requires Federal agencies to provide a 60-day notice in the **Federal Register** concerning each proposed collection of information, including each proposed extension of an existing collection of information, before submitting the collection to OMB for approval. To comply with this requirement, the CFTC is publishing

notice of the proposed collection of information listed below.

With respect to the following collection of information, the CFTC invites comments on:

- Whether the proposed collection of information is necessary for the proper performance of the functions of the Commission, including whether the information will have a practical use;
- The accuracy of the Commission's estimate of the burden of the proposed collection of information, including the validity of the methodology and assumptions used;
- Ways to enhance the quality, usefulness, and clarity of the information to be collected; and
- Ways to minimize the burden of collection of information on those who are to respond, including through the use of appropriate automated electronic, mechanical, or other technological collection techniques or other forms of information technology; *e.g.,* permitting electronic submission of responses.

Large Trader Reports, OMB control number 3038–0009—Extension

Parts 15 through 21 of the Commission's regulations under the Commodity Exchange Act (Act) require large trader reports from clearing members, futures commission merchants, and foreign brokers and traders. These rules are designed to provide the Commission with information to effectively conduct its market surveillance program, which includes the detection and prevention of price manipulation and enforcement of speculative position limits.

The Commission estimates the burden of this collection of information as follows:

ESTIMATED ANNUAL REPORTING BURDEN

17 CFR section	Annual number of respondents	Total annual responses	Hours per response	Total hours
Parts 15–21	4,731	69,392	0.35	24,435

There are no capital costs or operating and maintenance costs associated with this collection.

Dated: March 5, 2002.

Jean A. Webb,

Secretary of the Commission.

[FR Doc. 02–5779 Filed 3–08–02; 8:45 am]

BILLING CODE 6351–01–M

DEPARTMENT OF EDUCATION

Notice of Proposed Information Collection Requests

AGENCY: Department of Education.

SUMMARY: The Leader, Regulatory Information Management Group, Office of the Chief Information Officer, invites comments on the proposed information collection requests as required by the Paperwork Reduction Act of 1995.

DATES: Interested persons are invited to submit comments on or before May 10, 2002.

SUPPLEMENTARY INFORMATION: Section 3506 of the Paperwork Reduction Act of 1995 (44 U.S.C. Chapter 35) requires that the Office of Management and Budget (OMB) provide interested Federal agencies and the public an early opportunity to comment on information collection requests. OMB may amend or waive the requirement for public consultation to the extent that public participation in the approval process would defeat the purpose of the information collection, violate State or Federal law, or substantially interfere with any agency's ability to perform its statutory obligations. The Leader, Regulatory Information Management Group, Office of the Chief Information Officer, publishes that notice containing proposed information collection requests prior to submission of these requests to OMB. Each proposed information collection, grouped by office, contains the following: (1) Type of review requested, *e.g.* new, revision, extension, existing or reinstatement; (2) title; (3) summary of the collection; (4) description of the need for, and proposed use of, the information; (5) respondents and frequency of collection; and (6) Reporting and/or Recordkeeping burden. OMB invites public comment.

The Department of Education is especially interested in public comment addressing the following issues: (1) Is this collection necessary to the proper functions of the Department; (2) will this information be processed and used in a timely manner; (3) is the estimate of burden accurate; (4) how might the Department enhance the quality, utility, and clarity of the information to be collected; and (5) how might the Department minimize the burden of this collection on the respondents, including through the use of information technology.

Dated: March 6, 2002.

John Tressler,

Leader, Regulatory Information Management, Office of the Chief Information Officer.

Office of the Undersecretary

Type of Review: New.

Title: Reading Excellence Act (REA) School Implementation and Impact Study: Site Visit Instruments.

Frequency: Annually.

Affected Public: State, Local, or Tribal Gov't, SEAs or LEAs; Federal Government.

Reporting and Recordkeeping Hour Burden:

Responses: 6,500.

Burden Hours: 28,875.

Abstract: The REASchool and Classrom Implementation and Impact Study (REA–SCII) is a 6-year study to learn about the implementation and impact of the REA legislation on instructional practice in reading and on student reading achievement. The study has the following features: (1) A representative sample of 75 schools that have received REA Local Reading Initiative sub-grants; (2) a longitudinal sample of kindergarten students followed through the end of second grade; (3) measures of student reading performance; (4) multiple observations of classroom reading instruction in grades K–2; and (5) surveys of and interview/focus groups with key school and district staff.

Requests for copies of the proposed information collection request may be accessed from *http://edicsweb.ed.gov,* or should be addressed to Vivian Reese, Department of Education, 400 Maryland Avenue, SW., Room 4050, Regional Office Building 3, Washington, DC 20202–4651 or to the e-mail address *vivian.reese@ed.gov.* Requests may also be electronically mailed to the Internet address *OCIO_RIMG@ed.gov* or faxed to 202–708–9346. Please specify the complete title of the information collection when making your request.

Comments regarding burden and/or the collection activity requirements should be directed to Jacqueline Montague at (202) 708–5359 or via her

Internet address *Jackie.Montague@ed.gov.* Individuals who use a telecommunications device for the deaf (TDD) may call the Federal Information Relay Service (FIRS) at 1–800–877–8339.

[FR Doc. 02–5797 Filed 3–8–02; 8:45 am]

BILLING CODE 4000–01–P

DEPARTMENT OF EDUCATION

Submission for OMB Review; Comment Request

AGENCY: Department of Education.

SUMMARY: The Leader, Regulatory Information Management Group, Office of the Chief Information Officer invites comments on the submission for OMB review as required by the Paperwork Reduction Act of 1995.

DATES: Interested persons are invited to submit comments on or before April 10, 2002.

ADDRESSES: Written comments should be addressed to the Office of Information and Regulatory Affairs, Attention: Lauren Wittenberg, Desk Officer, Department of Education, Office of Management and Budget, 725 17th Street, NW., Room 10202, New Executive Office Building, Washington, DC 20503 or should be electronically mailed to the Internet address *Lauren.Wittenberg@omb.eop.gov.*

SUPPLEMENTARY INFORMATION: Section 3506 of the Paperwork Reduction Act of 1995 (44 U.S.C. Chapter 35) requires that the Office of Management and Budget (OMB) provide interested Federal agencies and the public an early opportunity to comment on information collection requests. OMB may amend or waive the requirement for public consultation to the extent that public participation in the approval process would defeat the purpose of the information collection, violate State or Federal law, or substantially interfere with any agency's ability to perform its statutory obligations. The Leader, Regulatory Information Management Group, Office of the Chief Information Officer, publishes that notice containing proposed information collection requests prior to submission of these requests to OMB. Each proposed information collection, grouped by office, contains the following: (1) Type of review requested, *e.g.* new, revision, extension, existing or reinstatement; (2) title; (3) summary of the collection; (4) description of the need for, and proposed use of, the information; (5) respondents and frequency of collection; and (6) Reporting and/or Recordkeeping burden. OMB invites public comment.

Dated: March 6, 2002.

John Tressler,

Leader, Regulatory Information Management, Office of the Chief Information Officer.

Office of Special Education and Rehabilitative Services

Type of Review: New.

Title: Field Test of Agency Capacity to Implement Reporting Requirements Associated with Draft Evaluation Standard 3 and section 101 (a)(10)(c) of the Rehabilitation Act, as Amended.

Frequency: One-time.

Affected Public: State, Local, or Tribal Gov't, SEAs or LEAs.

Reporting and Recordkeeping Hour Burden:

Responses: 81.

Burden Hours: 9,801.

Abstract: This field test will assess Designated State Unit (VR agency) capacity to obtain and use unemployment insurance wage record data maintained by the State Employment Security Agencies (SESAs) needed to implement a proposed evaluation standard and associated performance indicators mandated by the 1992 amendments to the Rehabilitation Act, as amended by the Workforce Investment Act of 1998.

Requests for copies of the proposed information collection request may be accessed from *http://edicsweb.ed.gov,* or should be addressed to Vivian Reese, Department of Education, 400 Maryland Avenue, SW., Room 4050, Regional Office Building 3, Washington, DC 20202–4651, or to the e-mail address *vivian.reese@ed.gov.* Requests may also be electronically mailed to the Internet address *OCIO_RIMG@ed.gov* or faxed to 202–708–9346. Please specify the complete title of the information collection when making your request.

Comments regarding burden and/or the collection activity requirements should be directed to Sheila Carey at (202) 708–6287 or via her Internet address *Sheila.Carey@ed.gov.* Individuals who use a telecommunications device for the deaf (TDD) may call the Federal Information Relay Service (FIRS) at 1–800–877–8339.

[FR Doc. 02–5798 Filed 3–8–02; 8:45 am]

BILLING CODE 4000–01–P

DEPARTMENT OF ENERGY

Notice of Availability of the Draft Environmental Assessment for Waste Disposition Activities at the Paducah Gaseous Diffusion Plant

AGENCY: Department of Energy

ACTION: Notice of availability.

SUMMARY: The Department of Energy (DOE), announces the availability of the Draft Environmental Assessment (EA) for Waste Disposition Activities at the Paducah Site (DOE/EA–1339) for public review and comment. The Draft EA has been prepared in accordance with the requirements of the National Environmental Policy Act of 1969 as amended (NEPA) (42 U.S.C. 4321 *et seq.*); Council on Environmental Quality regulations implementing NEPA, 40 CFR parts 1500–1508; and DOE NEPA Implementing Procedures, 10 CFR part 1021.

The Draft EA evaluates the potential environmental impacts associated with continued waste management operations at the Paducah Site, as well as transportation of the waste to treatment and disposal facilities at various locations throughout the United States. The type of wastes analyzed include polychlorinated biphenyl (PCB) waste, low-level (radioactive) waste (LLW), mixed low-level waste (MLLW), and transuranic (TRU) waste. The Draft EA also evaluates the potential environmental impacts associated with the no action alternative.

The public is invited to comment on the Draft EA during the 45-day public comment period which starts on the date of this notice. All comments received will be considered in preparation of the final EA. Late comments will be considered to the extent practicable.

ADDRESSES: Comments on the Draft EA may be submitted by mail: U.S. Department of Energy, Oak Ridge Operations Office, Attn: Mr. David Allen, PO Box 2001, Oak Ridge, TN 37830, by fax (1–865–576–0746), electronically (*NEPA@oro.doe.gov*), or by phone (1–800–382–6938).

Copies of the Draft EA may also be obtained by contacting Mr. Gary Bodenstein, U.S. Department of Energy, Paducah Site Office, PO Box 1410, Paducah, KY 42001, by fax (1–270–441–6801), or electronically (*BodensteinGW@oro.doe.gov*). The Draft EA is available for review at the U.S. Department of Energy Environmental Information Center, Barkley Centre, 115 Memorial Drive, in Paducah Kentucky. The Draft EA is also available for review at the U.S. Department of Energy Public

Reading Room at 230 Warehouse Road, Oak Ridge, TN 37830.

For general information on the DOE NEPA process, please contact: Ms. Carol M. Borgstrom, Director, Office of NEPA Policy and Compliance (EH–42), U.S. Department of Energy, 1000 Independence Avenue, SW., Washington, DC 20585, telephone 202–586–4600, or leave a message at 1–800–472–2756.

DATES: The review period for the Draft EA ends April 25, 2002. Comments postmarked after that date will be considered to the extent practicable. One public meeting to discuss issues and receive oral comments on the Draft EA will be held on April 9, 2002, at the DOE Environmental Information Center, Barkley Centre, 115 Memorial Drive, in Paducah, Kentucky. The meeting will be held from 6–8 p.m. CST. The public meeting will provide the public with an opportunity to present comments, ask questions, and discuss concerns with DOE officials regarding the Draft EA. Specific information regarding the public meeting can be obtained by calling 1–270–441–5204, writing to the address above, or electronically.

SUPPLEMENTARY INFORMATION: The Draft EA evaluates DOE's proposed disposition activities for legacy and future-generated PCB wastes, LLW, MLLW, and TRU waste from the Paducah Gaseous Diffusion Plant at the Paducah Site in Paducah, Kentucky. The proposed action includes: Waste storage at the Paducah site; on-site treatment of a small portion of the waste volume covered in the Draft EA, off-site treatment at treatment locations throughout the United States; waste transport to treatment and disposal locations by truck, rail, or inter-modal shipment; and waste disposal at various locations throughout the United States. Off-site treatment and disposal locations for waste disposition include facilities in Nevada, Utah, Texas, Washington, Idaho, New Mexico, and Tennessee. Supporting activities are also evaluated in the Draft EA. Examples of these activities include, characterization activities of waste currently in storage, on-site waste movement, sorting, packaging, inspecting, labeling. The Draft EA also evaluates the no action alternative. Under this alternative, DOE would not perform disposition activities except for those needed for standard waste management and maintenance. No disposal of the existing and projected quantities of waste would occur. DOE would continue to store such waste. Ongoing non-CERCLA waste management operations would continue.

Issued in Oak Ridge, Tennessee on February 28, 2002.

David R. Allen,

Oak Ridge Operations NEPA Compliance Officer.

[FR Doc. 02–5751 Filed 3–8–02; 8:45 am]

BILLING CODE 6450–01–P

DEPARTMENT OF ENERGY

Office of Fossil Energy; National Petroleum Council

AGENCY: Department of Energy.

ACTION: Notice of open meeting.

SUMMARY: This notice announces a meeting of the National Petroleum Council. Federal Advisory Committee Act (Public Law 92–463,86 Stat. 770) requires notice of these meetings be announced in the **Federal Register**.

DATES: Wednesday, April 10, 2002, 9 a.m.

ADDRESSES: The St. Regis Hotel, Crystal Ballroom, 923 Sixteenth & K Streets, NW, Washington, DC.

FOR FURTHER INFORMATION CONTACT: Margie D. Biggerstaff, U.S. Department of Energy, Office of Fossil Energy, Washington, DC 20585. Phone: 202/586–3867.

SUPPLEMENTARY INFORMATION:

Purpose of the Committee: To provide advice, information, and recommendations to the Secretary of Energy on matters relating to oil and gas or the oil and gas industry.

Tentative Agenda:

—Call to order and introductory remarks by William A. Wise, Chair of the NPC.
—Remarks by the Honorable Spencer Abraham, Secretary of Energy.
—Administrative matters.
—Discussion of any other business properly brought before the NPC.
—Public comment (10-minute rule).
—Adjournment.

Public Participation: The meeting is open to the public. The chairperson of the Council is empowered to conduct the meeting in a fashion that will facilitate the orderly conduct of business. Any member of the public who wishes to file a written statement with the Council will be permitted to do so, either before or after the meeting. Members of the public who wish to make oral statements pertaining to agenda items should contact Margie D. Biggerstaff at the address or telephone number listed above. Requests must be received at least five days prior to the meeting and reasonable provision will be made to include the presentation on the agenda.

Transcripts: Available for public review and copying at the Public Reading Room, Room IE–190, Forrestal Building, 1000 Independence Avenue, SW., Washington, DC, between 9 a.m. and 4 p.m., Monday through Friday, except Federal holidays.

Issued at Washington, DC, on March 6, 2002.

Rachel M. Samuel,

Deputy Committee Advisory Management Officer.

[FR Doc. 02–5750 Filed 3–8–02; 8:45 am]

BILLING CODE 6450–01–P

DEPARTMENT OF ENERGY

Federal Energy Regulatory Commission

[Docket No. RP99–301–042]

ANR Pipeline Company; Notice of Compliance Filing

March 5, 2002.

Take notice that on February 25, 2002, ANR Pipeline Company (ANR) filed twenty service agreements with Madison Gas & Electric Company in compliance with the Commission's ''Order Accepting Negotiated Rate Agreements Subject to Conditions'' dated November 30, 2001 in the above-referenced docket. *ANR Pipeline Company*, 97 FERC ¶ 61,252 (2001).

Any person desiring to protest said filing should file a protest with the Federal Energy Regulatory Commission, 888 First Street, NE., Washington, DC 20426, in accordance with section 385.211 of the Commission's rules and regulations. All such protests must be filed in accordance with section 154.210 of the Commission's regulations. Protests will be considered by the Commission in determining the appropriate action to be taken, but will not serve to make protestants parties to the proceedings. Copies of this filing are on file with the Commission and are available for public inspection. This filing may also be viewed on the Web at *http://www.ferc.gov* using the ''RIMS'' link, select ''Docket#'' and follow the instructions (call 202–208–2222 for assistance). Comments, protests and interventions may be filed electronically via the Internet in lieu of paper. See, 18 CFR 385.2001(a)(1)(iii) and the instructions on the Commission's web site under the ''e-Filing'' link.

Magalie R. Salas,

Secretary.

[FR Doc. 02–5725 Filed 3–8–02; 8:45 am]

BILLING CODE 6717–01–P

DEPARTMENT OF ENERGY

Federal Energy Regulatory Commission

[Docket No. RP02–147–000]

ANR Pipeline Company; Notice To Convene Meeting and Setting Date for Convening Session

March 5, 2002.

On January 18, 2002, ANR Pipeline Company filed revised tariff sheets that limits the liability of ANR and its shippers to actual damages in certain circumstances. On February 28, 2002, the Commission accepted and suspended the tariff sheet to be effective on or earlier of August 1, 2002, or a date specified in a further order of the Commission, subject to refund and conditions. The Commission also directed the Dispute Resolution Service to convene a meeting of the parties by March 14, 2002, to arrange a process that may foster negotiation and agreement regarding the proposed tariff sheet.

The Commission's Dispute Resolution Service will conduct a convening session on March 13, 2002, commencing at 10 a.m., in Room 3M–2A at the Federal Energy Regulatory Commission, 888 First Street, NE., Washington, DC The convening session will cover Alternative Dispute Resolution (ADR) processes and interest-based negotiation and will finalize the ADR process. The Dispute Resolution Service will also assist the parties in better identifying and clarifying the issues in the above-captioned docket. If a party has any questions, please call Deborah Osborne at (202) 208–0831.

Magalie R. Salas,

Secretary.

[FR Doc. 02–5727 Filed 3–8–02; 8:45 am]

BILLING CODE 6717–01–P

DEPARTMENT OF ENERGY

Federal Energy Regulatory Commission

[Docket No. RP96–389–004]

Columbia Gulf Transmission Company; Notice of Negotiated Rate Filing

March 5, 2002.

Take notice that on March 1, 2002, Columbia Gulf Transmission Company (Columbia Gulf) tendered for filing the following contracts for disclosure of negotiated rate transactions: FTS–1 Service Agreement No. 72331 between Columbia Gulf Transmission Company and Cinergy Marketing & Trading, L.P. dated February 28, 2002 and FTS–1 Service Agreement No. 72307 between Columbia Gulf Transmission Company and Reliant Energy Services, Inc. dated February 28, 2002

Columbia Gulf states that transportation service is to commence April 1, 2002 under the agreements.

Columbia Gulf states that it has served copies of the filing on all parties identified on the official service list in Docket No. RP96–389.

Any person desiring to be heard or to protest said filing should file a motion to intervene or a protest with the Federal Energy Regulatory Commission, 888 First Street, NE., Washington, DC 20426, in accordance with Sections 385.214 or 385.211 of the Commission's Rules and Regulations. All such motions or protests must be filed in accordance with Section 154.210 of the Commission's Regulations. Protests will be considered by the Commission in determining the appropriate action to be taken, but will not serve to make protestants parties to the proceedings. Any person wishing to become a party must file a motion to intervene. Copies of this filing are on file with the Commission and are available for public inspection. This filing may also be viewed on the Web at *http://www.ferc.gov* using the ''RIMS'' link, select ''Docket#'' and follow the instructions (call 202–208–2222 for assistance). Comments, protests and interventions may be filed electronically via the Internet in lieu of paper. See, 18 CFR 385.2001(a)(1)(iii) and the instructions on the Commission's Web site under the ''e-Filing'' link.

Magalie R. Salas,

Secretary.

[FR Doc. 02–5723 Filed 3–8–02; 8:45 am]

BILLING CODE 6717–01–P

DEPARTMENT OF ENERGY

Federal Energy Regulatory Commission

[Docket No. EL02–63–000]

Constellation Power Source, Inc., Complainant, v. California Power Exchange, Corporation Respondent; Notice of Amended Complaint Filing

March 5, 2002.

Take notice that on February 26, 2002, Constellation Power Source, Inc. (Constellation) tendered for filing with the Federal Energy Regulatory Commission (Commission) an amended Appendix I to its Complaint filed February 25, 2002 in the above-referenced proceeding.

Any person desiring to be heard or to protest this filing should file a motion to intervene or protest with the Federal Energy Regulatory Commission, 888 First Street, NE., Washington, DC 20426, in accordance with Rules 211 and 214 of the Commission's Rules of Practice and Procedure (18 CFR 385.211 and 385.214). All such motions or protests must be filed on or before March 18, 2002. Protests will be considered by the Commission in determining the appropriate action to be taken, but will not serve to make protestants parties to the proceeding. Any person wishing to become a party must file a motion to intervene. Answers to the complaint shall also be due on or before March 18, 2002. Copies of this filing are on file with the Commission and are available for public inspection. This filing may also be viewed on the Web at *http://www.ferc.gov* using the ''RIMS'' link, select ''Docket #'' and follow the instructions (call 202–208–2222 for assistance). Comments, protests, interventions and answers may be filed electronically via the Internet in lieu of paper. See, 18 CFR 385.2001(a)(1)(iii) and the instructions on the Commission's Web site under the ''e-Filing'' link.

Magalie R. Salas,

Secretary.

[FR Doc. 02–5720 Filed 3–8–02; 8:45 am]

BILLING CODE 6717–01–P

DEPARTMENT OF ENERGY

Federal Energy Regulatory Commission

[Docket No. RP00–632–007]

Dominion Transmission, Inc.; Notice of Report of Refunds

March 5, 2002.

Take notice that on February 26, 2002, Dominion Transmission, Inc. (DTI) filed its report of refunds attributable to the resolution of the above-captioned proceeding. DTI states that the reported refunds and billing adjustments reflect DTI's implementation of the TCRA settlement in the above-captioned proceeding.

DTI states that the purpose of this filing is to report refunds (including interest) that DTI made by wire on January 29, 2002, and billing adjustments made with January invoices. DTI further states that these refunds were made as a result of DTI's implementation of the Commission's September 13, 2001, and October 26,

2001, letter orders, in Docket Nos. RP00–632–000, *et al.*

DTI states that copies of its report and summary workpapers are being mailed to affected customers, interested state commissions and all parties to the above-captioned proceeding.

Any person desiring to protest said filing should file a protest with the Federal Energy Regulatory Commission, 888 First Street, NE., Washington, DC 20426, in accordance with section 385.211 of the Commission's rules and Regulations. All such protests must be filed on or before March 12, 2002. Protests will be considered by the Commission in determining the appropriate action to be taken, but will not serve to make protestants parties to the proceedings. Copies of this filing are on file with the Commission and are available for public inspection. This filing may also be viewed on the web at *http://www.ferc.gov* using the ''RIMS'' link, select ''Docket#'' and follow the instructions (call 202–208–2222 for assistance). Comments, protests and interventions may be filed electronically via the Internet in lieu of paper. See, 18 CFR 385.2001(a)(1)(iii) and the instructions on the Commission's Web site under the ''e-Filing'' link.

Magalie R. Salas,

Secretary.

[FR Doc. 02–5726 Filed 3–8–02; 8:45 am]

BILLING CODE 6717–01–P

DEPARTMENT OF ENERGY

Federal Energy Regulatory Commission

[Docket No. RP02–166–000]

Florida Gas Transmission Company; Notice of Proposed Changes in FERC Gas Tariff

March 5, 2002.

Take notice that on February 28, 2002, Florida Gas Transmission Company (FGT) tendered for filing to become part of its FERC Gas Tariff, Third Revised Volume No. 1, the following tariff sheets, to be effective April 1, 2002:

Fourth Revised Sheet No. 528
Third Revised Sheet No. 529
Fourth Revised Sheet No. 530
Third Revised Sheet No. 531
Third Revised Sheet No. 532
Fourth Revised Sheet No. 533
Fourth Revised Sheet No. 534
Fourth Revised Sheet No. 535
First Revised Sheet No. 535.01
Third Revised Sheet No. 535A
Third Revised Sheet No. 536
Third Revised Sheet No. 537
Third Revised Sheet No. 538
Original Sheet No. 538A
Original Sheet No. 538B
Original Sheet No. 538C
Original Sheet No. 538D
Third Revised Sheet No. 539
Fourth Revised Sheet No. 540
Fourth Revised Sheet No. 541
Fourth Revised Sheet No. 542

FGT states that on December 1, 1999, in Docket No. CP00–40–000, FGT filed for authorization to expand the capacity of its system in order to provide incremental firm transportation service pursuant to Rate Schedule FTS–2 (Phase V Certificate Application). Included as part of the Phase V Certificate Application were the Phase V shippers' FTS–2 service agreements. FGT further states that in its Preliminary Determination on Nonenvironmental Issues dated November 22, 2000 (''PD'') the Commission noted that these service agreements contained certain variations from the FTS–2 Form of Service Agreement contained in FGT's Tariff. The PD directed FGT ''to refile them so that they conform with the FTS–2 Form of Service Agreement in its tariff or to develop a generally applicable FTS–2 Form of Service Agreement to conform with the Phase V agreements.'' FGT states that the instant filing includes tariff modifications to its FTS–2 Form of Service Agreement to include expansion provisions which generally conform to the expansion-type service agreements filed with the Phase V Certificate Application, and to make the FTS–2 Form of Service Agreement adaptable for incremental service offered as a result of future capacity expansions by FGT.

FGT states that copies of the filing were mailed to all interested parties and state commissions.

Any person desiring to be heard or to protest said filing should file a motion to intervene or a protest with the Federal Energy Regulatory Commission, 888 First Street, NE., Washington, DC 20426, in accordance with sections 385.214 or 385.211 of the Commission's rules and regulations. All such motions or protests must be filed in accordance with section 154.210 of the Commission's regulations. Protests will be considered by the Commission in determining the appropriate action to be taken, but will not serve to make protestants parties to the proceedings. Any person wishing to become a party must file a motion to intervene. Copies of this filing are on file with the Commission and are available for public inspection. This filing may also be viewed on the web at *http://www.ferc.gov* using the ''RIMS'' link, select ''Docket#'' and follow the instructions (call 202–208–2222 for assistance). Comments, protests and interventions may be filed electronically via the Internet in lieu of paper. See, 18 CFR 385.2001(a)(1)(iii) and the instructions on the Commission's web site under the ''e-Filing'' link.

Magalie R. Salas,

Secretary.

[FR Doc. 02–5730 Filed 3–8–02; 8:45 am]

BILLING CODE 6717–01–P

DEPARTMENT OF ENERGY

Federal Energy Regulatory Commission

[Docket No. RP02–167–000]

Florida Gas Transmission Company; Notice of Filing

March 5, 2002.

Take notice that on February 28, 2002, Florida Gas Transmission Company (FGT) tendered for filing service agreements for its Phase V Expansion. No tariff changes are proposed.

FGT states that pursuant to the Preliminary Determination on Nonenvironmental Issues issued by the Federal Energy Regulatory Commission (Commission) on November 22, 2000 in Docket Nos. CP00–40–000, et al., which addressed all of the nonenvironmental issues in the Phase V Expansion, the Commission noted that the service agreements attached to the application did not track exactly the Rate Schedule FTS–2 Form of Service Agreement in the FGT FERC Gas Tariff. The Commission directed that FGT either change the form of service agreement in its tariff to conform to the service agreements in the Phase V Expansion or that FGT change the service agreements to conform to the tariff.

Accordingly, FGT states that it is filing the Phase V service agreements under Section 4 of the Natural Gas Act. In addition, FGT is filing concurrently, in a companion filing, to modify its standard Form of Service Agreement for Rate Schedule No. FTS–2 to incorporate various terms and conditions applicable to expansion projects.

Any person desiring to be heard or to protest said filing should file a motion to intervene or a protest with the Federal Energy Regulatory Commission, 888 First Street, NE., Washington, DC 20426, in accordance with sections 385.214 or 385.211 of the Commission's rules and regulations. All such motions or protests must be filed on or before March 12, 2002. Protests will be considered by the Commission in determining the appropriate action to be taken, but will not serve to make protestants parties to the proceedings.

Any person wishing to become a party must file a motion to intervene. Copies of this filing are on file with the Commission and are available for public inspection. This filing may also be viewed on the Web at *http://www.ferc.gov* using the ''RIMS'' link, select ''Docket#'' and follow the instructions (call 202–208–2222 for assistance). Comments, protests and interventions may be filed electronically via the Internet in lieu of paper. See, 18 CFR 385.2001(a)(1)(iii) and the instructions on the Commission's web site under the ''e-Filing'' link.

Magalie R. Salas,

Secretary.

[FR Doc. 02–5731 Filed 3–8–02; 8:45 am]

BILLING CODE 6717–01–P

DEPARTMENT OF ENERGY

Federal Energy Regulatory Commission

[Docket No. RP02–153–001]

Horizon Pipeline Company, L.L.C.; Notice of Proposed Changes in FERC Gas Tariff

March 5, 2002.

Take notice that on March 1, 2002, Horizon Pipeline Company, L.L.C. (Horizon) tendered for filing to become part of its pending FERC Gas Tariff, Original Volume No. 1, pro forma First Revised Sheet No. 149A. Horizon states that it also withdrew pending pro forma First Revised Sheet No. 197 Horizon states that the purpose of this filing is to modify its Order No. 637 compliance filing based on customer's comments.

Horizon states that copies of the filing are being mailed to interested state commissions and all parties set out on the Commission's official service lists in Docket Nos. RP02–153 and CP00–129, et al.

Any person desiring to protest said filing should file a protest with the Federal Energy Regulatory Commission, 888 First Street, NE., Washington, DC 20426, in accordance with Section 385.211 of the Commission's rules and regulations. All such protests must be filed in accordance with Section 154.210 of the Commission's Regulations. Protests will be considered by the Commission in determining the appropriate action to be taken, but will not serve to make protestants parties to the proceedings. Copies of this filing are on file with the Commission and are available for public inspection. This filing may also be viewed on the Web at *http://www.ferc.gov* using the ''RIMS'' link, select ''Docket#'' and follow the instructions (call 202–208–2222 for assistance). Comments, protests and interventions may be filed electronically via the Internet in lieu of paper. See, 18 CFR 385.2001(a)(1)(iii) and the instructions on the Commission's Web site under the ''e-Filing'' link.

Magalie R. Salas,

Secretary.

[FR Doc. 02–5728 Filed 3–8–02; 8:45 am]

BILLING CODE 6717–01–P

DEPARTMENT OF ENERGY

Federal Energy Regulatory Commission

[Docket No. RP02–165–000]

Horizon Pipeline Company, L.L.C.; Notice of Proposed Changes in FERC Gas Tariff

March 5, 2002.

Take notice that on February 27, 2002, Horizon Pipeline Company, L.L.C. (Horizon) tendered for filing to become part of its FERC Gas Tariff, Original Volume No. 1, certain tariff sheets listed in Appendix A to the filing, to be effective April 1, 2002.

Horizon states that the purpose of this filing is to update Horizon's pending Tariff and correct or clarify various provisions.

Horizon states that copies of the filing are being mailed to interested state commissions and all parties set out on the Commission's official service lists in Docket Nos. CP00–129 and CP00–132.

Any person desiring to be heard or to protest said filing should file a motion to intervene or a protest with the Federal Energy Regulatory Commission, 888 First Street, NE., Washington, DC 20426, in accordance with sections 385.214 or 385.211 of the Commission's rules and regulations. All such motions or protests must be filed in accordance with section 154.210 of the Commission's regulations. Protests will be considered by the Commission in determining the appropriate action to be taken, but will not serve to make protestants parties to the proceedings. Any person wishing to become a party must file a motion to intervene. Copies of this filing are on file with the Commission and are available for public inspection. This filing may also be viewed on the Web at *http://www.ferc.gov* using the ''RIMS'' link, select ''Docket#'' and follow the instructions (call 202–208–2222 for assistance). Comments, protests and interventions may be filed electronically via the Internet in lieu of paper. See, 18 CFR 385.2001(a)(1)(iii) and the instructions on the Commission's Web site under the ''e-Filing'' link.

Magalie R. Salas,

Secretary.

[FR Doc. 02–5729 Filed 3–8–02; 8:45 am]

BILLING CODE 6717–01–P

DEPARTMENT OF ENERGY

Federal Energy Regulatory Commission

[Docket No. PR02–11–000]

Jefferson Island Storage & Hub L.L.C.; Notice of Petition for Rate Approval

March 5, 2002.

Take notice that on February 26, 2002, Jefferson Island Storage & Hub, L.L.C. (Jefferson Island) filed, pursuant to Section 284.123(b)(2) of the Commission's Regulations, a petition for rate approval of a system-wide rate it proposes to charge for transporting natural gas pursuant to section 311(a)(2) of the Natural Gas Policy Act of 1978 (NGPA). Jefferson Island proposes to continue its current maximum interruptible rate of $0.08000 per MMBtu plus a two-percent in-kind fuel reimbursement when compression is required for pipeline boost. Jefferson Island requests that rates be effective January 15, 2002.

Pursuant to section 284.123(b)(2)(ii), if the Commission does not act within 150 days of the date of this filing, the rates will be deemed to be fair and equitable and not in excess of an amount which interstate pipelines would be permitted to charge for similar transportation service. The Commission may, prior to the expiration of the 150 day period, extend the time for action or institute a proceeding to afford parties an opportunity for written comments and for the oral presentation of views, data, and arguments.

Any person desiring to participate in this rate proceeding must file a motion to intervene or protest with the Federal Energy Regulatory Commission, 888 First Street, NE., Washington DC 20426, in accordance with Sections 385.214 or 385.211 of the Commission's Rules and Regulations. All such motions or protests must be filed with the Secretary of the Commission on or before March 26, 2002. Protests will be considered by the Commission in determining the appropriate action to be taken, but will not serve to make protestants parties to the proceedings. Any person wishing to become a party must file a motion to intervene. This petition for rate approval is on file with the Commission and are available for public inspection.

This filing may also be viewed on the Web at *http://www.ferc.gov* using the ''RIMS'' link, select ''Docket#'' and follow the instructions (call 202–208–2222 for assistance). Comments, protests and interventions may be filed electronically via the Internet in lieu of paper. See, 18 CFR 385.2001(a)(1)(iii) and the instructions on the Commission's Web site under the ''e-Filing'' link.

Magalie R. Salas,

Secretary.

[FR Doc. 02–5722 Filed 3–8–02; 8:45 am]

BILLING CODE 6717–01–P

DEPARTMENT OF ENERGY

Federal Energy Regulatory Commission

[Docket No. RP97–374–004]

Northwest Pipeline Corporation; Notice of Compliance Filing

March 5, 2002.

Take notice that on February 28, 2002, Northwest Pipeline Corporation (Northwest) tendered for filing as part of its FERC Gas Tariff, Third Revised Volume No. 1, the following tariff sheets, with an effective date of February 18, 2002:

Substitute Eleventh Revised Sheet No. 364
Substitute Original Sheet No. 370

Northwest states that, consistent with the Commission's order in this proceeding, it is submitting tariff sheets to reflect removal of the nonconforming provision in Northwest's negotiated rate service agreement with Calpine Energy Services, L.P.

Any person desiring to protest said filing should file a protest with the Federal Energy Regulatory Commission, 888 First Street, NE., Washington, DC 20426, in accordance with Section 385.211 of the Commission's Rules and Regulations. All such protests must be filed in accordance with Section 154.210 of the Commission's Regulations. Protests will be considered by the Commission in determining the appropriate action to be taken, but will not serve to make protestants parties to the proceedings. Copies of this filing are on file with the Commission and are available for public inspection. This filing may also be viewed on the Web at *http://www.ferc.gov* using the ''RIMS'' link, select ''Docket#'' and follow the instructions (call 202–208–2222 for assistance). Comments, protests and interventions may be filed electronically via the Internet in lieu of paper. See, 18 CFR 385.2001(a)(1)(iii) and the instructions on the Commission's Web site under the ''e-Filing'' link.

Magalie R. Salas,

Secretary.

[FR Doc. 02–5724 Filed 3–8–02; 8:45 am]

BILLING CODE 6717–01–P

DEPARTMENT OF ENERGY

Federal Energy Regulatory Commission

[Project No. 2114–104]

Public Utility District No. 2 of Grant County, Washington; Notice Dismissing Complaint

March 4, 2002.

On February 12, 2002, the Yakama Nation (Complainant) filed a complaint against Public Utility District No. 2 of Grant County, Washington (Grant County), alleging that Grant County is in violation of its license for the Priest Rapids Hydroelectric Project No. 2114, Federal law authorizing the development of the Project, and certain sections of the Federal Power Act. The Complainant requested that the Commission employ fast track procedures to address its complaint.

On February 28, 2002, Complainant filed a motion, citing unspecified changed circumstances, requesting that the Commission hold processing of its complaint in abeyance pending the filing of an amended complaint at an unspecified future time. Rather than holding the complaint in abeyance pending the filing of a new, revised complaint, we will dismiss it without prejudice. At such time as complainant files an amended complaint, it will be noticed and a deadline for responses thereto will be established.

Magalie R. Salas,

Secretary.

[FR Doc. 02–5696 Filed 3–8–02; 8:45 am]

BILLING CODE 6717–01–P

DEPARTMENT OF ENERGY

Federal Energy Regulatory Commission

[Docket No. CP02–95–000]

Steuben Gas Storage Company; Notice of Application

March 5, 2002.

Take notice that on February 22, 2002, Steuben Gas Storage Company (Steuben Gas), Nine Greenway Plaza, Houston, Texas 77046, filed an application for a certificate of public convenience and necessity pursuant to section 7 of the Natural Gas Act (NGA), as amended, and the Federal Energy Regulatory Commission's (the Commission) Rules and Regulations thereunder. Steuben Gas requests authorization to modify two wells at the Adrian storage field in Steuben County, New York. The modifications will consist of: converting Adrian No. 2 well from an observation well to an injection/withdrawal well; and, laterally extending up to 1500 feet Adrian No. 8 well. These modifications are to improve the Adrian field's late-season deliverability, while maintaining the field's maximum operating limits originally certificated, all as more fully set forth in the application, which is on file with the Commission, and open for public inspection. This filing may be viewed on the Web at *http://www.ferc.gov* using the ''RIMS'' link, select ''Docket #'' and follow the instructions (call 202–208–2222 for assistance).

Steuben Gas requests that the Commission issue a certificate by May 1, 2002 so that contracts may be awarded and required work completed by July 31, 2002. The cost of the modifications is estimated to be approximately $700,000. No new rates or rate schedules are proposed. The proposed modifications should improve the storage field's operating reliability and availability and provide significant operational benefits to all customers, so Steuben Gas would be allowed to roll-in the modification's costs in a future rate case. No changes are proposed to the currently authorized Maximum Daily Withdrawal Quantity or Maximum Daily Injection Quantity levels.

Questions regarding this filing should be directed to Dawn A. McGuire, Attorney, Steuben Gas Storage Company, 9 E Greenway Plaza, Houston, TX 77046 or call (832) 676–5503.

There are two ways to become involved in the Commission's review of this project. First, any person wishing to obtain legal status by becoming a party to the proceedings for this project should, on or before March 26, 2002, file with the Federal Energy Regulatory Commission, 888 First Street, NE, Washington, DC 20426, a motion to intervene in accordance with the requirements of the Commission's Rules of Practice and Procedure (18 CFR 385.214 or 385.211) and the Regulations under the NGA (18 CFR 157.10). A person obtaining party status will be placed on the service list maintained by the Secretary of the Commission and will receive copies of all documents filed by the applicant and by all other parties. A party must submit 14 copies

of filings made with the Commission and must mail a copy to the applicant and to every other party in the proceeding. Only parties to the proceeding can ask for court review of Commission orders in the proceeding.

However, a person does not have to intervene in order to have comments considered. The second way to participate is by filing with the Secretary of the Commission, as soon as possible, an original and two copies of comments in support of or in opposition to this project. The Commission will consider these comments in determining the appropriate action to be taken, but the filing of a comment alone will not serve to make the filer a party to the proceeding. The Commission's rules require that persons filing comments in opposition to the project provide copies of their protests only to the party or parties directly involved in the protest.

Persons who wish to comment only on the environmental review of this project should submit an original and two copies of their comments to the Secretary of the Commission. Environmental commenters will be placed on the Commission's environmental mailing list, will receive copies of the environmental documents, and will be notified of meetings associated with the Commission's environmental review process. Environmental commenters will not be required to serve copies of filed documents on all other parties. However, the nonparty commenters will not receive copies of all documents filed by other parties or issued by the Commission (except for the mailing of environmental documents issued by the Commission) and will not have the right to seek court review of the Commission's final order.

The Commission may issue a preliminary determination on non-environmental issues prior to the completion of its review of the environmental aspects of the project. This preliminary determination typically considers such issues as the need for the project and its economic effect on existing customers of the applicant, on other pipelines in the area, and on landowners and communities. For example, the Commission considers the extent to which the applicant may need to exercise eminent domain to obtain rights-of-way for the proposed project and balances that against the non-environmental benefits to be provided by the project. Therefore, if a person has comments on community and landowner impacts from this proposal, it is important either to file comments or to intervene as early in the process as possible.

If the Commission decides to set the application for a formal hearing before an Administrative Law Judge, the Commission will issue another notice describing that process. At the end of the Commission's review process, a final Commission order approving or denying a certificate will be issued.

Comments, protests and interventions may be filed electronically via the Internet in lieu of paper. See, 18 CFR 385.2001(a)(1)(iii) and the instructions on the Commission's Web site under the ''e-Filing'' link.

Magalie R. Salas,

Secretary.

[FR Doc. 02–5719 Filed 3–8–02; 8:45 am]

BILLING CODE 6717–01–P

DEPARTMENT OF ENERGY

Federal Energy Regulatory Commission

[Project No. 6032–041]

Niagara Mohawk Power Corporation and Fourth Branch Associates (Mechanicville); New York; Notice of Availability of Final Environmental Assessment

March 4, 2002.

In accordance with the National Environmental Policy Act of 1969 and the Federal Energy Regulatory Commission's (Commission) regulations, 18 CFR part 380 (Order No. 486, 52 FR 47897), the Office of Energy Projects has reviewed the application for license for the Mechanicville Hydroelectric Project, located on the Hudson River in Saratoga and Rensselaer Counties, New York, and has prepared a Final Environmental Assessment (FEA) for the project. A Draft Environmental Assessment was issued on November 13, 2001. No federal lands or Indian reservations are occupied by project works or located within the project boundary.

The FEA contains the staff's analysis of the potential environmental impacts of the project and concludes that surrendering the license for the project, with appropriate environmental protective measures, would not constitute a major federal action that would significantly affect the quality of the human environment.

A copy of the FEA is attached to the Commission Order Accepting License Surrender issued on February 28, 2002 and is available for public inspection. The FEA may also be viewed on the web at *http://www.ferc.gov* using the ''RIMS'' link—select ''Docket #'' and follow the instructions (call 202–208–2222 for assistance).

For further information, contact Ellen Armbruster (202) 208–1672.

Magalie R. Salas,

Secretary.

[FR Doc. 02–5697 Filed 3–8–02; 8:45 am]

BILLING CODE 6717–01–P

DEPARTMENT OF ENERGY

Federal Energy Regulatory Commission

[Docket No. CP01–361–000]

Northwest Pipeline Corp.; Notice of Availability of the Environmental Assessment for the Proposed Grays Harbor Pipeline Project

March 4, 2002.

The staff of the Federal Energy Regulatory Commission (FERC or Commission) has prepared an environmental assessment (EA) on the natural gas pipeline facilities proposed by Northwest Pipeline Corporation (Northwest) in the above-referenced docket.

The EA was prepared to satisfy the requirements of the National Environmental Policy Act. The staff concludes that approval of the proposed project, with appropriate mitigating measures, would not constitute a major Federal action significantly affecting the quality of the human environment.

The EA assesses the potential environmental effects of the construction and operation of the proposed gas pipeline and aboveground facilities including:

- About 49.0 miles of a 20-inch-diameter pipeline in Thurston and Grays Harbor Counties, Washington, which would tie in with Northwest's existing mainline and mainline loop south of the Town of Ranier in Thurston County, Washington. The pipeline would extend from the interconnect with Northwest's existing system to the Satsop Combustion Turbine Project that is being constructed in the town of Satsop in Grays Harbor County, Washington.
- A meter station adjacent to the Satsop Project plant site at the end of the pipeline;
- Upgrades to the existing Tumwater Compressor Station in Thurston County, including the addition of a new compressor unit (rated 3,894 horsepower) and replacement of an existing backup generator with a 355 kilowatt backup generator; and
- Other aboveground facilities including two 20-inch-diameter

mainline taps, a pig launcher, four 20-inch-diameter block valve assemblies; and a new antenna and radio repeater at the existing Capitol Peak radio site.

The purpose of the proposed facilities would be to supply natural gas to fully operate Duke Energy Grays Harbor LLC's Satsop Combustion Turbine Project in Satsop, Washington. The pipeline would have a design capacity of up to 161,500 dekatherms per day. The electricity produced by the Satsop Combustion Turbine Project would be sold in the wholesale electric market. A portion of the output would be delivered to Energy Northwest, and the balance would be delivered to Bonneville Power Authority to help satisfy current and projected power demand.

The EA has been placed in the public files of the FERC. A limited number of copies of the EA are available for distribution and public inspection at: Federal Energy Regulatory Commission, Public Reference and Files Maintenance Branch 888 First Street, N.E., Room 2A, Washington, DC 20426, (202) 208–1371.

Copies of the EA have been mailed to Federal, state and local agencies, public interest groups, interested individuals, newspapers, and parties to this proceeding.

Any person wishing to comment on the EA may do so. To ensure consideration prior to a Commission decision on the proposal, it is important that we receive your comments before the date specified below. Please carefully follow these instructions to ensure that your comments are received in time and properly recorded:

- Send two copies of your comments to: Secretary, Federal Energy Regulatory Commission 888 First St., N.E., Room 1A, Washington, DC 20426;
- Label one copy of the comments for the attention of the Office of Energy Projects (Gas Branch 2)
- Reference Docket No. CP01–361–000; and
- Mail your comments so that they will be received in Washington, DC on or before April 3, 2002.

Comments may also be filed electronically via the Internet in lieu of paper. See 18 CFR 385.2001(a)(1)(iii) and the instructions on the Commission's web site at *http://www.ferc.gov* under the ''e-Filing'' link and the link to the User's Guide. Before you can file comments you will need to create an account which can be created by clicking on ''Login to File'' and then ''New User Account.''

Comments will be considered by the Commission but will not serve to make the commentor a party to the proceeding. Any person seeking to become a party to the proceeding must file a motion to intervene pursuant to Rule 214 of the Commission's Rules of Practice and Procedures (18 CFR 385.214).[1] Only intervenors have the right to seek rehearing of the Commission's decision.

Affected landowners and parties with environmental concerns may be granted intervenor status upon showing good cause by stating that they have a clear and direct interest in this proceeding which would not be adequately represented by any other parties. You do not need intervenor status to have your comments considered.

Additional information about the proposed project is available from the Commission's Office of External Affairs, at (202) 208–1088 or on the FERC Internet website *(www.ferc.gov)* using the ''RIMS'' link to information in this docket number. Click on the ''RIMS'' link, select ''Docket #'' from the RIMS Menu, and follow the instructions. For assistance with access to RIMS, the RIMS helpline can be reached at (202) 208–2222.

Similarly, the ''CIPS'' link on the FERC Internet website provides access to the texts of formal documents issued by the Commission, such as orders, notices, and rulemakings. From the FERC Internet website, click on the ''CIPS'' link, select ''Docket #'' from the CIPS menu, and follow the instructions. For assistance with access to CIPS, the CIPS helpline can be reached at (202) 208–2474.

Magalie R. Salas,

Secretary.

[FR Doc. 02–5694 Filed 3–8–02; 8:45 am]

BILLING CODE 6717–01–P

[1] Interventions may also be filed electronically via the Internet in lieu of paper. See the previous discussion on filing comments electronically.

DEPARTMENT OF ENERGY

Federal Energy Regulatory Commission

[Docket No. CP01–415–000]

East Tennessee Natural Gas Company; Notice of Site Visit

March 4, 2002.

Between March 18–20, 2002 the staff will be conducting site visits of the project route for the proposed Patriot Expansion in Wythe and Smyth Counties in Virginia and in Sullivan, Knox, Hamilton, Franklin, and Morgan Counties in Tennessee. Representatives of East Tennessee Natural Gas Company will accompany Commission staff. Anyone interested in participating in the site visits may contact the Commission's Office of External Affairs at (201) 208–1088 for more details and must provide their own transportation.

Magalie R. Salas,

Secretary.

[FR Doc. 02–5695 Filed 3–8–02; 8:45 am]

BILLING CODE 6717–01–P

DEPARTMENT OF ENERGY

Federal Energy Regulatory Commission

[Docket No. EL01–118–000]

Investigation of Terms and Conditions of Public Utility Market-Based Rate Authorizations; Notice of Staff Conference Agenda

March 1, 2002.

As announced in the Notice of Staff Conference issued on February 25, 2002, Commission staff will hold a conference on March 11, 2002 to address the comments and reply comments that were filed in this proceeding. The purpose of this conference is to determine whether and how the proposed tariff condition can be modified to address legitimate concerns that have been raised by commenters while, at the same time, protecting customers against unjust and unreasonable rates that may result from anticompetitive behavior or the exercise of market power. A key question to be considered is whether the proposed tariff condition can be modified to adequately protect customers on an interim basis until such time as the Commission adopts other measures to ensure competitive markets, including standard market design rules (with market-power mitigation rules where appropriate) and the establishment of RTO market monitoring units. At that time, a determination could be made as to whether a tariff condition will continue to be needed.

The conference will start at 9:30 a.m. and adjourn at 1:30 p.m. It is scheduled to be held in the Commission meeting room at the Federal Energy Regulatory Commission, 888 First Street, NE, Washington, DC The conference is open for the public to attend.

An agenda of the conference that includes a list of conference panelists is appended to this notice as Attachment A. In addition, a staff paper that provides an overview of the comments and identifies possible modifications to the tariff condition is appended to this notice as Attachment B. Those who wish to submit comments following the conference may file written comments,

limited to 20 pages in length, by March 22, 2002.

Filing Requirements for Paper and Electronic Filings

Comments, papers, or other documents related to this proceeding may be filed in paper format or electronically. Those filing electronically do not need to make a paper filing.

For paper filings, the original and 14 copies of the comments should be submitted to the Office of the Secretary, Federal Energy Regulatory Commission, 888 First Street, NE, Washington DC 20426 and should refer to Docket No. EL01–118–000.

Documents filed electronically via the Internet must be prepared in WordPerfect, MS Word, Portable Document Format, or ASCII format. To file the document, access the Commission's website at www.ferc.gov, click on ''E-Filing'' and then follow the instructions for each screen. First time users will have to establish a user name and password. The Commission will send an automatic acknowledgment to the sender's E-mail address upon receipt of comments. User assistance for electronic filing is available at 202–208–0258 or by E-mail to efiling@ferc.fed.us. Comments should not be submitted to the E-mail address.

All comments will be placed in the Commission's public files and will be available for inspection in the Commission's Public Reference Room at 888 First Street, NE, Washington DC 20426, during regular business hours. Additionally, all comments may be viewed, printed, or downloaded remotely via the Internet through FERC's Homepage using the RIMS link. User assistance for RIMS is available at 202–208–2222, or by E-mail to rimsmaster@ferc.fed.us.

Opportunities for Listening to and Viewing the Conference Offsite and Obtaining a Transcript

The conference will be transcribed. Those interested in obtaining transcripts should contact Ace Federal Reporters at 202–347–3700.

The Capitol Connection will broadcast the conference live via the Internet and by phone. To find out more about The Capitol Connection's Internet and phone bridge, contact David Reininger or Julia Morelli at 703–993–3100 or go to *www.capitolconnection.gmu.edu*.

Live and archived audio of the conference will also available for a fee via National Narrowcast Network. Live audio is available by telephone at 202–966–2211 and by subscription on the Internet at www.hearing.com. The Internet audio will be archived and available for listening after the event is completed. Billing is based on listening time.

Anyone interested in purchasing videotapes of the conference should call VISCOM at 703–715–7999.

Questions about the conference program should be directed to: Saida Shaalan Office of Markets, Tariffs, and Rates Federal Energy Regulatory Commission 888 First Street, NE Washington, DC 20426 202–208–0278 Saida.Shaalan@ferc.fed.us

Linwood A. Watson, Jr.,

Deputy Secretary.

Attachment A

Agenda—Conference on Investigation of Terms and Conditions of Public Utility Market-Based Rate Authorizations

[Docket No. EL01–118–000]

I. Opening Remarks—9:30 a.m.–10 a.m.

- David Hunger, Economist, Office of Markets, Tariffs and Rates, Division of Rates and Tariffs, West
- Jerome Pederson, Energy Industry Analyst, Office of Markets, Tariffs and Rates, Division of Issue Identification and Resolution Management
- Joyce Kim, Staff Attorney, Office of General Counsel

I. Panel Discussion—10 a.m.–11:30 a.m.

- Steven Cadwallader, Connecticut Department of Public Utilities Control
- Julie Simon, Vice President of Policy, Electric Power Supply Association
- Scott M. Harvey, Director with LECG, LLC
- John C. Hilke, Economist and Electricity Project Coordinator, Bureau of Economics, Federal Trade Commission
- Mark M. Jacobs, Goldman Sachs and Company
- Gerald Norlander, Director, Public Utility Law Project, National Association of State Utility Consumer Advocates
- Robert O'Neil, Counsel for National Rural Electric Cooperative Association

Break 11:30 a.m.–11:45 a.m.

III. Open Discussion (Open to any interested participant)—11:45 a.m.–1:30 p.m.

Attachment B

Staff Paper—Conference on Investigation of Terms and Conditions of Public Utility Market-Based Rate Authorizations

[Docket No. EL01–118–000]

I. Commission's Proposal in November 20, 2001 Order

In the November 20 Order in this proceeding,[1] the Commission noted that it has become increasingly concerned about the potential that public utilities with market-based rate authorization might, under certain circumstances, exercise market power or engage in anticompetitive behavior that could result in unjust or unreasonableness rates. The Commission proposed to take steps now to minimize the potential for any such market power abuse or anticompetitive behavior to protect customers against possible unjust and unreasonable rates. In particular, the Commission proposed to revise all existing market-based rate tariffs and authorizations to include the following provision: ''As a condition of obtaining and retaining market-based rate authority, the seller is prohibited from engaging in anticompetitive behavior or the exercise of market power. The seller's market-based rate authority is subject to refunds or other remedies as may be appropriate to address any anticompetitive behavior or exercise of market power.''

The Commission stated that anticompetitive behavior or exercises of market power include behavior that raises the market price through physical or economic withholding of supplies. The November 20 Order explains that ''physical withholding'' occurs ''when a supplier fails to offer its output to the market during periods when the market price exceeds the supplier's full incremental costs,'' and ''economic withholding'' occurs ''when a supplier offers output to the market at a price that is above both its full incremental costs and the market price (and thus, the output is not sold).''

The Commission solicited initial and reply comments on its proposal. More than 90 comments (initial and reply) were received. Some commenters argue that the Commission's proposed tariff condition is overly broad or vague and will create uncertainty in the marketplace. Others argue that the condition does not go far enough. An overview of the comments and a list of possible modifications to the tariff condition is provided below.

The purpose of this conference is to determine whether and how the proposed tariff condition could be modified to address legitimate concerns that have been raised by the commenters while, at the same time, satisfying the Commission's concern that customers be protected against unjust and unreasonable rates that may result from anticompetitive behavior or the exercise of market power. A key question to be considered is whether the proposed tariff condition can be modified to adequately protect customers on an interim basis until such time as the Commission adopts other measures to ensure competitive markets, including standard market design rules (with market-power mitigation rules where appropriate) and the establishment of RTO market monitoring units. At that time, a determination could be made as to whether a tariff condition will continue to be needed.

II. Overview of Comments

The November 20 Order proposed a tariff condition prohibiting anticompetitive behavior or the exercise of market power. The November 20 Order highlighted two ways to exercise market power: physical and economic withholding of output. The November 20 Order stated that withholding supplies can also occur when a seller is able to erect barriers to entry that limit or prevent

[1] 97 FERC ¶ 61,220 (2001).

others from offering supplies to the market or that raise the costs of other suppliers. Examples would include denying, delaying, or requiring unreasonable terms, conditions, or rates for natural gas service to a potential electric competitor in bulk power markets. Some commenters argue that the proposed definition of both economic and physical withholding is vague and overly broad. These commenters generally argue that because the definitions do not consider certain physical, institutional and regulatory constraints, suppliers will be subject to penalties and/or refunds in many cases where they were simply making reasonable business decisions, not exercising market power.

A. Economic Withholding

The November 20 Order defined economic withholding as occurring when a supplier offers output to the market at a price that is above both its full incremental costs and the market price (and thus, the output is not sold).

Some commenters claimed these problems with identifying economic withholding:

• Pay-as-bid markets: Much of the market activity takes place in bilateral markets where the supplier is paid its bid. In those markets, competitive suppliers base their bids on the perceived value of their product, not merely the marginal cost of production.

• Energy-limited units: For units that are constrained by the number of hours they can run, such as hydroelectric facilities or plants facing emissions limitations, the opportunity cost of running in a given hour is the foregone profit in another hour. Commenters argue that suppliers must bid in excess of running costs in order to account for the opportunity costs. Under the Order's definition of economic withholding, such bids would be considered to be engaging in economic withholding and subject to refund.

• Start-up and minimum load costs: For units with start-up costs, it may not be profitable for the plant to provide energy for only a few hours when the market price exceeds its incremental costs. If the revenue during a given time period is not large enough to offset the startup costs as well as the variable running costs, then it would not be profitable for a plant to run for that period. The generator may submit bids in excess of marginal cost in order to recover its startup costs.

B. Physical Withholding

The November 20 Order defined physical withholding as occurring when a supplier fails to offer its output to the market during periods when the market price exceeds the supplier's full incremental costs.

Some commenters claimed these problems with identifying physical withholding:

• In the cases of energy limited units, outage risk and operating risks, if the suppliers cannot bid sufficiently high to avoid running all of their capacity (potentially engaging in economical withholding) they will be forced to simply hold back some or all of their output, even when the market price is greater than their full incremental costs.

• A plant operator needs to be able to decide what is the best time to take a plant out of service or run it at less than full capacity for reliability purposes. If the operator faces the risk of having the unit's revenues subject to refund or having its market-based rate authority revoked, it may be forced to operate the plant in a way that reduces its reliability.

C. Market Price

The November 20 Order stated that anticompetitive behavior or exercises of market power include behavior that raises the market price through physical or economic withholding of supplies.

Some commenters claimed these problems with identifying market price:

• Suppliers can sell into many different markets.

• Markets are differentiated across time (*e.g.,* forward vs. spot) and product (*e.g.,* energy vs. reserves).

D. Economic Consequences

Some commenters contend that entry of new electricity generating facilities, and the value of existing plants, may be reduced because of the risk of refunds imposed as a result of the proposed tariff condition. Potential suppliers may be less interested in building new facilities and those that are interested may not be able to obtain financing or would have to borrow at higher interest rates (due to the increased uncertainty), thus deterring entry.

E. Penalty for Prohibited Behavior

In its November 20 Order, the Commission stated:

Should public utility market participants engage in prohibited behavior, their rates will be subject to increased scrutiny by the Commission, and to potential refunds or such other remedies as may be appropriate. This could result in further conditions or restrictions on their market-based rate authority, including, for example, prospective revocation of the market-based rate authority of the seller or any of its affiliates, or conditions precluding the seller from selling at market-based rates to its affiliates.

1. Comments generally in support:

• The refund condition should be broad enough to allow for refunds from all sellers who profit from anticompetitive behavior regardless of whether a particular seller was engaged in the anticompetitive behavior.

• Reasonable penalties or other sanctions in individual cases in which a supplier has exercised market-power may be warranted.

2. Comments generally in opposition:

• The November 20 Order does not explain or provide examples of how a seller with market-based rate authority can be in a position to abuse market power.

• The Commission should rely on existing monitoring plans and deal with alleged abuses on a case-by-case review.

• As written, the November 20 Order could penalize those who have not committed anticompetitive acts.

3. Modifications proposed by commenters:

• The refund condition should apply only to spot market sales; to wholesale sellers possessing market power; or to generation affiliated with vertically-integrated transmission and distribution assets.

• There should be various exemptions such as: Market dysfunction unrelated to seller misconduct; entities which are too small to exercise market power effectively; forward markets including bilateral sales outside the spot market; power marketers that do not own physical assets; transactions into a market with Commission-approved market monitoring and mitigation measures.

• Some commenters propose that a specific time limit for claiming refunds be instituted while others argue that such a time limit will reward violaters who successfully conceal their anticompetitive behavior.

F. Procedural Issues

Due to concerns regarding the impact of the refund condition, commenters make the following recommendations:

1. Administrative concerns:

• Clarify and specify the requirements for filing a pleading seeking to trigger a refund investigation and the burden of proof in such proceedings; adopt a streamlined-resolution process or expedited complaint-review process.

2. Due process concerns:

• Clarify that sellers will be given the opportunity to respond to charges and explain the basis for their actions (*e.g.,* a trial-type hearing).

3. Concerns regarding regulatory risk and transaction finality:

• Investigate on a case-by-case basis and provide the requisite notice.

• Establish a reasonable period of time for filing a complaint, or commencing an investigation, and a reasonable retroactive refund period.

• To avoid the reduction of the market value of non-rate-base generating stations, such as merchant power plants, establish bright-line procedures for facilities' transfers which will preserve their market-based rate authorizations.

III. Possible Modifications to Tariff Condition

A. Modifications to Definitions

Based on comments regarding the definitions of economic withholding and physical withholding, should we modify the proposed definitions? If so, how?

• Should the term ''full incremental cost'' be clarified (*e.g.,* to include opportunity cost)?

• Should the use of the term ''market price'' be clarified, *e.g.,* as to time (forward vs. spot), product (energy vs. reserves) and geographic market?

• Should environmental, operational and reliability factors be taken into account for purposes of determining whether physical withholding has occurred? If so, how?

B. Limit Applicability to Certain Markets/ Market Participants

• Should we exempt sales in markets that are fully competitive with effective market monitoring; exempt all suppliers in an approved RTO market with Commission-approved bid caps?

• Should we exempt power supply agreements of a specified duration or agreements where parties explicitly waive refund obligations; exempt all bilateral

contracts; create safe harbors (rebuttable presumption of legality) for certain transactions, such as, those with markups at a certain level above marginal cost?

• Should we limit the condition to the specific market(s) in which a seller has market-power, and tailor mitigation rules to those firms given their particular circumstances, while exempting from the rules those generators that are unable or unlikely to exercise market power, such as net buyers, and small, single-plant suppliers?

• Should we set an impact threshold for alleged violations?

C. Procedure Modifications/Applicability Based on Timing

• Should we limit the window of refund potential so that transactions would not be subject to refund unless specifically challenged within a particular timeframe; set a sunset date for the refund condition?

• Should we clarify the type of opportunity that sellers will be given to respond to allegations and explain the basis for their actions (e.g., a trial-type hearing)?

D. Other Suggestions

• Should we impose temporary price caps along with reserve capacity requirements until a competitive market structure emerges?

• Should we tailor mitigation measures to be applied to a particular exercise of market power, class of participant, and sector?

[FR Doc. 02–5693 Filed 3–8–02; 8:45 am]

BILLING CODE 6717–01–P

DEPARTMENT OF ENERGY

Federal Energy Regulatory Commission

Notice of Meeting

March 6, 2002.

The following notice of meeting is published pursuant to section 3(A) of the Government in the Sunshine Act (Pub. L. No. 94–409), 5 U.S.C 552B:

AGENCY HOLDING MEETING: Federal Energy Regulatory Commission.

DATE AND TIME: March 13, 2002, 10:00 a.m.

PLACE: Room 2C, 888 First Street, NE, Washington, DC 20426.

STATUS: Open.

MATTERS TO BE CONSIDERED: Agenda.

*Note—Items listed on the agenda may be deleted without further notice.

CONTACT PERSON FOR MORE INFORMATION: Magalie R. Salas, Secretary. Telephone (202) 208–0400. For a recording listing items stricken from or added to the meeting, call (202) 208–1627.

This is a list of matters to be considered by the Commission. It does not include a listing of all papers relevant to the items on the agenda; however, all public documents may be examined in the reference and information center.

787th—Meeting March 13, 2002, Regular Meeting, 10 a.m.

Administrative Agenda

A–1.
Docket# AD02–1, 000, Agency Administrative Matters

A–2.
Docket# AD02–7, 000, Customer Matters, Reliability, Security and Market Operations

A–3.
Docket# AD01–3, 000, California Infrastructure Update

A–4.
Docket# AD02–12, 000, Northeast RTO Update
Other#s RT01–86, 000, Bangor Hydro-Electric Company; RT01–86, 001, Bangor Hydro-Electric Company; RT01–86, 002, Bangor Hydro-Electric Company; RT01–95, 000, New York Independent System Operator Inc.; RT01–95, 001, New York Independent System Operator Inc.; RT01–95, 002, New York Independent System Operator Inc.; RT01–99, 000, Regional Transmission Organizations; RT01–99, 001, Regional Transmission Organizations; RT01–99, 002, Regional Transmission Organizations; RT01–99, 003, Regional Transmission Organizations

Markets, Tariffs and Rates—Electric

E–1.
Docket# RM01–12, 000, Standard Market Design Scoping

E–2.
Docket# ER02–766, 000, Florida Power & Light Company

E–3.
Docket# ER02–637, 000, Pacific Gas and Electric Company
Other#s ER02–637, 001, Pacific Gas and Electric Company

E–4.
Docket# ER02–405, 000, Entergy Services, Inc.
Other#s ER02–405, 001, Entergy Services, Inc.

E–5.
Docket# ER02–338, 000, Portland General Electric Company
Other#s ER02–338, 001, Portland General Electric Company

E–6.
Docket# ER02–818, 000, LG&E Capital Trimble County LLC

E–7.
Docket# ER01–1740, 000, New York Independent System Operator Inc.
Other#s ER01–1520, 000, New York Independent System Operator Inc.

E–8.
Omitted

E–9.
Docket# ER02–4, 000, Pacific Gas & Electric Company

E–10.
Docket# ER02–358, 000, Pacific Gas and Electric Company
Other#s ER01–2998, 000, Pacific Gas and Electric Company

E–11.
Docket# ER02–782, 000, Florida Power & Light Company

E–12.
Docket# EL99–14, 003, Southwestern Electric Cooperative, Inc. v. Soyland Power Cooperative, Inc.
Other#s EL99–14, 004, Southwestern Electric Cooperative, Inc. v. Soyland Power Cooperative, Inc.

E–13.
Docket# EC02–15, 000, Cinergy Services, Inc., Cinergy Corporation, The Cincinnati Gas & Electric Company, Cinergy Power Investments and PSI Energy, Inc.
Other#s ER02–177, 000, Cinergy Services, Inc., Cinergy Corporation, The Cincinnati Gas & Electric Company, Cinergy Power Investments and PSI Energy, Inc.; ER02–177, 001, Cinergy Services, Inc., Cinergy Corporation, The Cincinnati Gas & Electric Company, Cinergy Power Investments and PSI Energy, Inc.; ER02–177, 002, Cinergy Services, Inc., Cinergy Corporation, The Cincinnati Gas & Electric Company, Cinergy Power Investments and PSI Energy, Inc.; EC02–15, 001, Cinergy Services, Inc., Cinergy Corporation, The Cincinnati Gas & Electric Company, Cinergy Power Investments and PSI Energy, Inc.

E–14.
Docket# EL01–78, 001, LG&E Energy Marketing, Inc. v. Southern Company Services, Inc. and Georgia Transmission Corporation

E–15.
Docket# EL01–65, 001, Californians for Renewable Energy, Inc. v. British Columbia Hydro and Power Authority, Powerex Corporation, Southern Energy Marketing Company (Mirant) and Bonneville Power AdministrationE–16.
Docket# ER02–111, 001, Midwest Independent Transmission System Operator, Inc.

E–17.
Docket# ER02–170, 001, Boston Edison Company

E–18.
Docket# ER02–132, 002, American Transmission Systems, Inc.

E–19.
Docket# EL01–92, 001, Bangor Hydro-Electric Company

E–20.
Docket# ER02–42, 001, GWF Energy

LLC
Other#s ER00–2998, 003, Southern Company Services, Inc.; ER00–2999, 003, Southern Company Services, Inc.; ER00–3000, 003, Southern Company Services, Inc.; ER00–3001, 003, Southern Company Services, Inc.
E–21.
Omitted
E–22.
Docket# EL01–93, 004, Mirant Americas Energy Marketing, L.P., Mirant New England, LLC, Mirant Kendall, LLC and Mirant, LLC v. ISO New England Inc.
Other#s ER00–2998, 004, Southern Company Services, Inc.; ER00–2999, 004, Southern Company Services, Inc.; ER00–3000, 004, Southern Company Services, Inc.; ER00–3001, 004, Southern Company Services, Inc.
E–23.
Docket# ER02–185, 002, New England Power Pool
E–24.
Omitted
E–25.
Omitted
E–26.
Omitted
E–27.
Docket# ER02–79, 001, Southern California Edison Company
E–28.
Docket# ER01–3009, 003, New York Independent System Operator, Inc.
Other#s ER01–3009, 004, New York Independent System Operator, Inc.; ER01–3153, 003, New York Independent System Operator, Inc.; ER01–3153, 004, New York Independent System Operator, Inc.; EL00–90, 003, Morgan Stanley Capital Group, Inc. v. New York Independent System Operator, Inc.; EL00–90 004 Morgan Stanley Capital Group, Inc. v. New York Independent System Operator, Inc.
E–29.
Docket# EG02–78, 000, Duke Energy Hot Spring, LLC
E–30.
Omitted
E–31.
Docket# ER02–645, 000, American Transmission Company LLC
E–32.
Docket# EL01–87, 000, South Eastern Energy Corporation and Morgan Stanley Capital Group, Inc. v. City of Dalton, Georgia, Georgia Transmission Corporation, Georgia Power Company and the Municipal Electric Authority of Georgia
E–33.
Docket# EL01–90, 000, Consumers Union of United States, Inc.
E–34.
Docket# EL02–46, 000, Generator Coalition v. Entergy Services, Inc.
Other#s ER01–2201, 000, Generator Coalition v. Entergy Services, Inc.
E–35.
Omitted
E–36.
Omitted
E–37.
Docket# EL02–47, 000, Wisconsin Public Power, Inc. v. Wisconsin Power & Light Company
Other#s EL02–52, 000, Municipal Wholesale Power Group v. Wisconsin Power & Light Company
E–38.
Docket# RT02–2, 001, State-Federal Regional RTO Panels
Other#s RM98–1, 003, Regulations Governing Off-the-Record Communications; RM99–2, 003, Regional Transmission Organizations; EC99–80, 017, American Electric Power Service Company; ER99–3144, 017, Alliance Companies; RM00–10, 001, Open Access Same-Time Information System Phase II; ER00–3295, 004, International Transmission Company; RT01–1, 001, NB Power Corporation, Nova Scotia Power Incorporated, Maritime Electric Company, Limited, Maine Electric Company, Maine Public Service Company and Eastern Maine Electric Cooperative, Inc.; RT01–2, 003, PJM Interconnection, L.L.C., Allegheny Electric Cooperative, Inc., Atlantic City Electric Company, Baltimore Gas & Electric Company, Delmarva Power & Light Company, Jersey Central Power & Light Company, Metropolitan Edison Company, PECO Energy Company, Pennsylvania Electric Company, Potomac Electric Power Company, PPL Electric Utilities Corporation, Public Service Electric & Gas Company and UGI Utilities, Inc.; RT01–10, 002, Allegheny Power; RT01–13, 001, Duquesne Light Company; RT01–15, 003, Avista Corporation, Montana Power Company, Nevada Power Company, Portland General Electric Company, Puget Sound Energy, Inc. and Sierra Pacific Power Company; RT01–26, 002, Northern Indiana Public Service Company; RT01–34, 005, Southwest Power Pool, Inc.; RT01–35, 004, Avista Corporation, Bonneville Power Administration, Idaho Power Company, Montana Power Company, Nevada Power Company, PacifiCorp, Portland General Electric Company and Sierra Power Company; RT01–37, 002, Dayton Power and Light Company; RT01–44, 002, Arizona Public Service Company, Desert STAR, Inc., El Paso Corporation, Public Service Company of Colorado, Public Service Company of New Mexico, Texas-New Mexico Power Company and Tucson Electric Power Company; RT01–67, 004, GridFlorida LLC, Florida Power & Light Company, Florida Power Corporation and Tampa Electric Company; RT01–74, 006, Carolina Power & Light Company, Duke Energy Corporation, GridSouth Transco, LLC and South Carolina Electric & Gas Company; RT01–75, 006, Entergy Services, Inc.; RT01–77, 003, Southern Company Services, Inc.; EL01–80, 002, National Grid USA; RT01–82, 001, San Diego Gas & Electric Company; RT01–83, 001, Pacific Gas & Electric Company; RT01–84, 002, Illinois Power Company; RT01–85, 006, California Independent System Operator Corporation; RT01–86, 002, Bangor Hydro-Electric Company, Central Maine Power Company, ISO New England Inc., National Grid USA, Northeast Utilities Service Company, United Illuminating Company and the Vermont Electric Power Company, Inc.; RT01–87, 004, Midwest Independent System Operator, Inc.; RT01–88, 013, Ameren Corporation, American Electric Power Service Corporation, American Transmission Systems, Inc., Appalachian Power Company, Central Illinois Public Service Company, Cleveland Electric Illuminating Company, Columbus Southern Power Company, Commonwealth Edison Company of Indiana, Inc., Commonwealth Edison Company, Consumers Energy Company, Dayton Power and Light Company, Detroit Edison Company, Exelon Corporation, FirstEnergy Corporation, Illinois Power Company, Indiana Michigan Power Company, Kentucky Power Company, Kingsport Power Company, Ohio Edison Company, Ohio Power Company, Pennsylvania Power Company, Toledo Edison Company, Union Electric Company, Virginia Electric & Power Company and Wheeling Power Company; RT01–89, 001, Citizens Communications Company; RT01–90, 001, Concord Electric Company; RT01–92, 001, Southern California Edison Company; RT01–93, 001, California Power Exchange Corporation;

RT01–94, 002, NSTAR Services Company; RT01–95, 002, New York Independent System Operator, Inc., Central Hudson Gas & Electric Corporation, Consolidated Edison Company of New York, Inc., Niagara Mohawk Power Corporation, Orange & Rockland Utilities, Inc. and Rochester Gas and Electric Corporation; RT01–96, 001, Alliant Energy Corporate Services, Inc., American Transmission Company, LLC, Central Illinois Light Company, Cincinnati Gas & Electric Company, Cinergy Corporation, Hoosier Energy Rural Electric Cooperative, Inc., IES Utilties, Inc., Interstate Power Company, Kentucky Utilities Company, Louisville Gas and Electric Company, Northern States Power Company (Minnesota), Northern States Power Company (Wisconsin), PSI Energy, Inc., Southern Indiana Gas and Electric Company and Union Light, Heat & Power Company; RT01–98, 003, PJM Interconnection, L.L.C., Monongahela Power Company, Potomac Edison Company and West Penn Power Company; RT01–99, 003, Regional Transmission Organizations; RT01–100, 002, Regional Transmission Organizations; RT01–101, 002, International Transmission Company and DTE Energy Company; EL01–116, 001, Montana-Dakota Utilities Company; ER01–123, 006, Illinois Power Company; EC01–137, 001, DTE Energy Company and International Transmission Company; EC01–146, 002, International Transmission Company and DTE Energy Company; ER01–2992, 001, Commonwealth Edison Company; ER01–2993, 001, Virginia Electric and Power Company; ER01–2995, 001, American Electric Power Company; ER01–2997, 001, Dayton Power and Light Company; ER01–2999, 001, Illinois Power Company; ER01–3000, 002, International Transmission Company and DTE Energy Company; RT02–1, 001, Arizona Public Service Company, El Paso Electric Company, Public Service Company of New Mexico, Tucson Electric Power Company and WestConnect RTO, LLC; ER02–108, 001, Midwest Independent Transmission System Operator, Inc.

E–39.
Docket# ER01–3141, 001, American Electric Power Service Corporation: Other#s ER01–3141, 002, American Electric Power Service Corporation: ER01–3141, 003, American Electric Power Service Corporation

E–40.
Docket# ER01–2584, 000, Northeast Utilities Service Company Other#s ER01–2584, 001, Northeast Utilities Service Company

E–41.
Docket# EL02–35, 000, Niagara Mohawk Power Corporation v. Rochester Gas and Electric Corporation

E–42.
Docket# TX97–8, 000, PECO Energy Company

Miscellaneous Agenda

M–1.
Reserved

Markets, Tariffs and Rates—Gas

G–1.
Docket# RP00–336 002 El Paso Natural Gas Company
Other#s RP00–139, 000, ONEOK Energy Marketing & Trading Company, L.P.; RP01–484, 000, Aera Energy LLC; RP01–486, 000, Apache Nitrogen Products, Inc.

G–2.
Docket# RP02–158, 000, Viking Gas Transmission Company

G–3.
Docket# PR02–3, 000, Bay Gas Storage Company, Ltd.

G–4.
Docket# RP00–335, 000, Black Marlin Pipeline Company
Other#s RP01–414, 000, Black Marlin Pipeline Company

G–5.
Docket# RP00–341, 000, Egan Hub Partners, L.P.
Other#s RP00–341 001, Egan Hub Partners, L.P.; RP01–48, 000, Egan Hub Partners, L.P.

G–6.
Docket# RP00–401, 000, Enbridge Pipelines (AlaTenn) Inc.
Other#s RP01–4, 001, Enbridge Pipelines (AlaTenn) Inc.

G–7.
Docket# RP00–400, 000, Enbridge Pipelines (Midla) Inc.
Other#s RP01–5, 001, Enbridge Pipelines (Midla) Inc.

G–8.
Omitted

G–9.
Docket# CP95–168, 006, Sea Robin Pipeline Company

G–10.
Omitted

G–11.
Docket# RP02–122, 000, Kinder Morgan Interstate Gas Transmission, LLC

G–12.
Docket# RP01–612, 001, ANR Pipeline Company
Other#s RP01–612, 000, ANR Pipeline Company

G–13.
Docket# PR01–18, 001, Northwest Natural Gas Company
Other#s PR01–18, 000, Northwest Natural Gas Company

G–14.
Docket# RP98–53, 024, Kinder Morgan Interstate Gas Transmission LLC
Other#s RP98–53, 015, Kinder Morgan Interstate Gas Transmission LLC; RP98–53, 021, Kinder Morgan Interstate Gas Transmission LLC; RP98–53, 023, Kinder Morgan Interstate Gas Transmission LLC

G–15.
Docket# RP00–340, 000, Gulf South Pipeline Company, LP
Other#s RP00–340, 001, Gulf South Pipeline Company, LP; RP00–340, 002, Gulf South Pipeline Company, LP; RP01–7, 000, Gulf South Pipeline Company, LP

G–16.
Docket# RP00–461, 000, Western Gas Interstate Company

Energy Projects—Hydro

H–1.
Omitted

H–2.
Docket# P–2724, 028, City of Hamilton, Ohio

H–3.
Docket# P–2188, 073, PPL Montana, LLC

H–4.
Docket# P–2342, 013, PacifiCorp

H–5.
Docket# DI00–4, 001, Leonard Murphy

H–6.
Docket# EL02–10, 000, Hydro Investors, Inc. v. Trafalgar Power Inc., Christine Falls of New York, Inc., Franklin Industrial Complex, Inc., Aetna Life Insurance Company, Algonquin Power Corporation, Algonquin Power Income Fund and Algonquin Power Fund (Canada)
Other#s P–3760, 011, Franklin Industrial Complex, Inc.; P–4639, 021, Christine Falls of New York, Inc.; P–4639, 023, Christine Falls of New York, Inc.; P–4639, 026, Christine Falls of New York, Inc.; P–4900, 063, Trafalgar Power, Inc.; P–4900, 066, Trafalgar Power, Inc.; P–4900, 068, Trafalgar Power, Inc.; P–5000, 059, Trafalgar Power, Inc.; P–5000, 063, Trafalgar Power, Inc.; P–5000, 064, Trafalgar Power, Inc.; P–6878, 008, Trafalgar Power, Inc.; P–6878, 010, Trafalgar Power, Inc.; P–9685, 024, Trafalgar Power, Inc.; P–9685, 026, Trafalgar Power, Inc.;

P–9709, 051, Trafalgar Power, Inc.; P–9709, 054, Trafalgar Power, Inc.; P–9709, 057, Trafalgar Power, Inc.; P–9821, 092, Trafalgar Power, Inc.; P–9821, 095, Trafalgar Power, Inc.; P–9821, 097, Trafalgar Power, Inc.; EL99–26, 000, Hydro Investors, Inc. v. Trafalgar Power Inc., Christine Falls of New York, Inc., Franklin Industrial Complex, Inc., Aetna Life Insurance Company, Algonquin Power Corporation, Algonquin Power Income Fund and Algonquin Power Fund (Canada)

H–7.
Docket# P–2016, 044, City of Tacoma, Washington
H–8.
Docket# P–2145, 042, Public Utility District No. 1 of Chelan County, Washington
Other#s P–943, 075, Public Utility District No. 1 of Chelan County, Washington
H–9.
Omitted
H–10.
Docket# DI97–8, 002, Georgia-Pacific Corporation
Other#s DI97–9, 002, Georgia-Pacific Corporation; P–2618, 011, Georgia-Pacific Corporation; P–2660, 010, Georgia-Pacific Corporation

Energy Projects—Certificates

C–1.
Docket# CP01–176, 000, Georgia Strait Crossing Pipeline LP
Other#s CP00–179, 000, Georgia Strait Crossing Pipeline LP; CP01–176, 001, Georgia Strait Crossing Pipeline LP; CP01–176, 002, Georgia Strait Crossing Pipeline LP; CP01–177, 000, Georgia Strait Crossing Pipeline LP; CP01–178, 000, Georgia Strait Crossing Pipeline LP
C–2.
Docket# CP02–79, 000, Desert Crossing Gas Storage and Transportation System LLC
C–3.
Docket# CP02–74, 000, Reef International, L.L.C.
C–4.
Docket# CP01–76, 001, Cove Point LNG Limited Partnership
Other#s CP01–77, 002, Cove Point LNG Limited Partnership; CP01–156, 002, Cove Point LNG Limited Partnership; RP01–217, 002, Cove Point LNG Limited Partnership
C–5.
Docket# CP01–87, 003, Dominion Transmission, Inc.
C–6.
Docket# CP00–232, 003, Iroquois Gas Transmission System, L.P.
Other#s CP00–232, 000, Iroquois Gas Transmission System, L.P.
C–7.
Docket# RM01–7, 000, Policy on Certificates of Public Convenience and Necessity for Gas Transmission Facilities in the Offshore Southern Louisiana Area

Magalie R. Salas,
Secretary.

[FR Doc. 02–5852 Filed 3–8–02; 8:45 am]

BILLING CODE 6717–01–P

DEPARTMENT OF ENERGY

Federal Energy Regulatory Commission

[Docket No. AD02–1–000]

Federal Energy Regulatory Records Information System; Notice of Intent To Modify the Commission Issuance Posting System, Records Information Management System and Docket Sheet System

March 5, 2002.

The Federal Energy Regulatory Commission (the Commission), hereby gives notice that it intends to modify its Commission Issuance Posting System (CIPS), Records Information Management System (RIMS) and its Docket Sheet System on the web. The Commission intends to combine these three online systems into a single online system called the Federal Energy Regulatory Records Information System (FERRIS).

In response to many suggestions regarding the Commission's online systems, the Commission plans to replace its existing systems with newer, more robust technology. Ultimately, the new system will provide users with a single point of access with better search capability and additional functions. The Commission intends the new system to result in increased performance and reliability for the Commission's staff and public users.

This notice announces the coming availability of the new system. The Commission will make FERRIS available for testing and comment before placing the system into full production. We encourage the public and the Commission's staff to try the new system and comment on it through the Content Master e-mail link, *contentmaster@ferc.gov*.

The Commission is making every effort to incorporate all functions currently in the existing systems into FERRIS. Appendix A provides a cross reference between the existing functions in CIPS, RIMS and the Docket Sheets and the corresponding function in FERRIS. Appendix B discusses the few features that will not be programmed into FERRIS. The Commission will make some modification to the file formats in which the documents will be available. Details appear in Appendix B.

A test version of FERRIS will be made available to the public through the Commission's Web site at *www.ferc.gov* in Mid March. The full production version of FERRIS will be available in early April. Please refer to the Commission's website for the announcement of the exact dates the system will be available. To familiarize the public with the features of the new system, demonstrations will be conducted in Room 3M–2A&B at the Commission's headquarters on March 12, 2002, at 2:00 pm and on March 18, 2002, at 2:00 pm. While it is not mandatory, it is preferable to pre-register for the demonstrations. Pre-registration will facilitate passing through security. To pre-register, send an e-mail with your name, company affiliation and the date of the demonstration you will attend to *contentmaster@ferc.gov* or fax to (202) 208–2320 or call the Public Reference Room at (202) 208–1371, then press 0.

Magalie R. Salas,
Secretary.

Appendix A

CROSSWALK OF FUNCTIONALITY

Function in CIPS	Function in new system
Three separate search screens	One general search screen and one advanced search screen.
Docket Number Search	Same.
Date Range	Issued Date will be referred to as Document date. Other than that, no change.
Radio buttons for 1 day, 1 week, 30 days, 120 days, year search	Replaced with text boxes for user supplied number of days, months or years. The default is 1 day, 1 month or 1 year.
Text Search	Text Search is now powered by a much more robust search engine.
Libraries of Hydro, Oil, Gas, Electric, Rulemaking and Miscellaneous	No change except the miscellaneous library is called general.

CROSSWALK OF FUNCTIONALITY—Continued

Function in CIPS	Function in new system
Sort Returns by rank or date, specify maximum rows returned and rows per page returned.	From the search page you may specify the number of documents per page. From the results page, you may sort or resort your results by rank or date. You may choose to display the summary or hide the summary. You may choose to display 10 hits or 200 hits.
Company Name (This feature in CIPS searches the description from left to right depending on the number of words typed in the search field, e.g., a search term of Tennessee will find Tennessee Gas Pipeline but will not find East Tennessee Natural Gas.).	From the General Search, de-select the option ''full text'' so only the description is selected. Type the name or portion of the name of the company you wish to find in the text search field. The entire description will be searched for the search term or terms. From the Advanced Search, type in the name of the company in the author/recipient affiliation field.
Type/Prefix	Type the prefix in the docket number search field. A guide with the docket prefixes will be provided.
Download Selected Items in a compressed file	The download option is available in the Action drop down list.

Function in RIMSWeb	Function in new system
Docket Search	Docket Search on the General Search page permits full or partial docket number search; multiple subdockets may be entered.
Accession Number Search	Unchanged on the Advanced Search page.
Author/Recipient	Unchanged on the Advanced Search page.
Class/Type	On the General Search page, permits up to four class and four type selections.
FERC Cite #; Fed Court Cite, Opinion	Unchanged on the Advanced Search page.
Related Doc ID	Unchanged on the Advanced Search page.
Order	Unchanged on the Advanced Search page.
Tariff/Rate	Eliminated; See discussion above.
Daily Filings	On the general search page select submittal or issuance, and select the radio button for the previous day, then select the library.
Libraries of Gas/Oil, Hydro, Electric, General	Libraries of Natural Gas, Oil, Hydro, Electric, Rulemaking, General.
Document Information Page	Retained.
Available File Formats Page	Retained.

Appendix B

Features Not in FERRIS and File Format Changes in FERRIS

As the Commission begins to phase in the full system, we will be eliminating the ASCII text version of issuances. Instead, we will provide the files in the file format of the software in which they are created and portable document format (PDF) [1]. Our decision is based on primarily two reasons. First, as the Commission's issuances have become more complex, including tables of contents, embedded spreadsheets, tables, photographs, *etc.,* the conversion to ASCII has become inaccurate. The PDF version of the files, while still searchable, will preserve formatting, fonts, *etc.*

The second reason for our determination relates to the Commission's practice of scanning issuances and creating an image (in Tagged Image Format (TIF)). Since the inception of its electronic filing program in the fall of 2001, the Commission has converted all files submitted electronically into PDF. This practice worked well. In consequence, the Commission no longer believes it is necessary to convert the files containing issuances into TIF files. Similarly, the Commission has historically scanned a paper version of the Form 1 into RIMS in tagged image format, TIF. The Commission currently receives the Form 1 in electronic format. To make it easier to access the Form 1 from FERRIS, Form 1 data will be converted to a PDF file.

Currently, each day the Commission compresses the files posted that day to CIPS for easy downloading. One compressed file contains all files posted during the day. Other compressed files contain all files posted to each library that day. On some occasions, the Commission posted issuances to CIPS the morning following the date of issuance due to the late hour of issuance. The compressed files had already been created for the day necessitating posting some files the following morning. Henceforth, the Commission will focus its time and energies to adding issuances to FERRIS the day of issuance to the greatest extent possible. To further this goal, the Commission will no longer create the compressed files. FERRIS will allow users to download the day's issuances in a self-extracting compressed file that the user creates himself. See Appendix C for details on compressing and downloading files in FERRIS.

On CIPS today, users can save certain search parameters for reuse during a later session. CIPS uses a permanent ''cookie'' file to provide this feature. ''Cookies'' are text files placed on the customer's computer hard drive by the website computer. When the customer is on our website, the agency can access the ''cookie'' file. There are two kinds of ''cookies.'' A session ''cookie'' is one that continues in operation only for the duration of the browser session—when the user shuts down the browser, the ''cookie'' is released and goes away. A persistent ''cookie,'' however, continues in operation after the close of the individual session. Shutting down the browser will cause the ''cookie'' to be written into a special ''cookie'' file on the user's computer, so that the next time the user visits the website that generated the ''cookie,'' the ''cookie'' will be sent to the website's server again.

On June 22, 2000, the Office of Management and Budget (OMB) issued a memorandum regarding privacy policies and data collection by agencies on the internet, clarifying the policy on use of ''cookies'' by government agencies.[2] OMB's June 22 Memorandum states that:

[t]he presumption should be that ''cookies'' will not be used at Federal websites. Under this new Federal policy, ''cookies'' should not be used at Federal websites, or by contractors when operating websites on behalf of agencies, unless, in addition to clear and conspicuous notice, the following conditions are met: a compelling need to gather the data on the site; appropriate and publicly disclosed privacy safeguards for handling of information derived from ''cookies''; and personal approval by the head of the agency.

[1] PDF is a text format created by Adobe Systems Incorporated and designed to be portable across computer platforms.

[2] OMB Memorandum 00–13, ''Privacy Policies and Data Collection on Federal Web Sites'' (June 22 Memorandum). The complete text of the June 22 Memorandum can be found at *http://www.whitehouse.gov/omb/memoranda/m00–13.html.*

Subsequently, OMB interpreted its memorandum to apply only to persistent ''cookies,'' and not to session ''cookies.'' [3] While the Commission will continue to use session ''cookies,'' to bring the Commission's systems into full compliance with OMB's memorandum, the systems will not use persistent ''cookies.'' As a consequence, the ability of the user to retain search parameters in CIPS will not be replicated in FERRIS.

Currently, RIMS contains a search entitled Tariff/Rate which is intended to provide a search of electric tariffs and rate schedules. The Commission never fully implemented this feature in RIMS. Further, on April 20, 2001, the Commission issued a Notice of Inquiry in Docket No. RM01–5–000 [4] inviting comments on selected issues related to the filing of electronic tariffs in order to develop a notice of proposed rulemaking, and thereafter a final rule, with respect to the filing of electronic tariffs. In light of the Commission's intention to pursue the filing of electronic tariffs and the fact that the electric tariff portion of RIMS was not fully formed, FERRIS will not contain the Tariff/Rate feature.

Appendix C

Downloading Files to a Self-Extracting Compressed File

To download all files posted on a specific day, select the previous day by clicking on the appropriate radio button or type in a specific date. Select only issuances if you wish to limit your results to issuances. Be sure to select 200 Results per Page. You may limit your results to a specific library or libraries by clicking on the appropriate box or boxes. From the results page select ''select all'' from the Search Options drop down menu. From the Action drop down menu select download, then press Go. Using this technique, all files from any results list may be downloaded in a self-extracting compressed file including the day's postings in any one of the libraries. In addition, the system includes a feature called the Request List. Select items from your results list, use the Action drop down menu to add the selected files to your Request List. You may do as many searches as you wish, adding to your Request List as you go. When you are finished, you may download the files in your Request List in a single self-extracting compressed file.

[FR Doc. 02–5717 Filed 3–8–02; 8:45 am]

BILLING CODE 6717–01–P

[3] Letter from John T. Spotila, Administrator, Office of Information and Regulatory Affairs, OMB, to Roger Baker, Chief Information Officer, U.S. Department of Commerce (September 5, 2000).

[4] Electronic Tariff Filings, 66 FR 15673 (March 20, 2001), 94 FERC ¶ 61,270 (March 14, 2001), III FERc Stats. & Regs. Notices ¶ 35,538 (March 14, 2001).

ENVIRONMENTAL PROTECTION AGENCY

[FRL–7156–2]

Agency Collection Activities: Proposed Collection; Comment Request; Investigations into Possible Noncompliance of Motor Vehicles

AGENCY: Environmental Protection Agency (EPA).

ACTION: Notice.

SUMMARY: In compliance with the Paperwork Reduction Act (44 U.S.C. 3501 *et seq.*), this document announces that EPA is planning to submit the following continuing Information Collection Request (ICR) to the Office of Management and Budget (OMB): Investigations into Possible Noncompliance of Motor Vehicles; EPA ICR Number 222.06; OMB Number 2060–0086 expiring June 30, 2002. Before submitting the ICR to OMB for review and approval, EPA is soliciting comments on specific aspects of the proposed information collection as described below.

DATES: Comments must be submitted on or before May 10, 2002.

ADDRESSES: Interested persons may obtain copy of the ICR without charge from: United States Environmental Protection Agency, Certification and Compliance Division; ATTN: Richard W. Nash, 2000 Traverwood Dr, Ann Arbor MI 48105.

FOR FURTHER INFORMATION CONTACT: Richard W. Nash, 2000 Traverwood Dr, Ann Arbor, MI 48105. (734) 214–4412; nash.dick@epa.gov

SUPPLEMENTARY INFORMATION:

Affected entities: Entities potentially affected by this action are owners/lessees of motor vehicles.

Title: Investigations into Possible Noncompliance of Motor Vehicles; EPA ICR Number 222.06; OMB Number 2060–0086 expiring June 30, 2002.

Abstract: As part of an integrated compliance program, EPA occasionally needs to evaluate the emission performance of in-use motor vehicles. In order to perform this function, EPA must solicit certain information from the vehicle owner/lessee. Participation in the information survey, as well as the vehicle evaluation, is strictly voluntary. Typically, a group of 25 potential participants is identified. They are asked to return a postcard indicating their willingness to participate and if so, to verify some limited vehicle information. They are also asked when it would be suitable to contact them. Those willing to participate are called and asked about a half dozen questions concerning vehicle condition and maintenance. Depending on owner/lessee response, additional groups of potential participants may be contacted until a sufficient number of vehicles has been obtained.

Information collected is used to assure that vehicles procured meet certain criteria. For example, since a manufacturer's responsibility to recall passenger cars is limited to 10 years of age or 100,000 miles of use, vehicles tested to establish potential recall liability must also meet those criteria. Other testing programs and vehicle types have different criteria. All information is publicly available.

The previous description generally describes how EPA obtains information on in-use passenger cars and light trucks from individual owners and lessees. Heavy duty trucks, those commonly referred to as over ''¾ ton'' capacity, are usually employed commercially; typically they are part of a ''fleet'' of identical (or very similar) vehicles. Consequently, EPA employs a slightly different method to obtain them. Potential owners/lessees can be found in registrations lists; engine manufacturers will also supply identities of their customers. Occasionally, a fleet operator will contact EPA and volunteer to participate. Once potential sources are identified, EPA will make a brief telephone call to the fleet managers to ascertain if they wish to participate. If the response is positive, EPA will visit the fleet to inspect vehicles and review maintenance records. (Fleets typically keep very good records on each vehicle; EPA can quickly determine if a particular unit is acceptable.) A single fleet can supply multiple vehicles and, typically, is quite willing to participate. Therefore, EPA makes far fewer inquiries than with individual owners of light vehicles. Based on comments, EPA may decide to address light and heavy duty vehicles separately.

EPA uses several techniques in selecting the class or category of motor vehicles to be evaluated. First, if based on other information (*e.g.,* defect reports, service bulletins) there is a suspicion that a problem exists; EPA may target a particular group. Second, groups with a large number of vehicles have potential for significant air quality effects; they may be selected for that reason. New emission control technology without a proven history is another factor in making selections. Finally, some vehicle classes are selected on a random basis.

An agency may not conduct or sponsor, and a person is not required to respond to, a collection of information

unless it displays a currently valid OMB control number. The OMB control numbers for EPA's regulations are listed in 40 CFR part 9 and 48 CFR chapter 15. The EPA would like to solicit comments to:

(i) Evaluate whether the proposed collection of information is necessary for the proper performance of the functions of the agency, including whether the information will have practical utility;

(ii) Evaluate the accuracy of the agency's estimate of the burden of the proposed collection of information, including the validity of the methodology and assumptions used;

(iii) Enhance the quality, utility, and clarity of the information to be collected; and

(iv) Minimize the burden of the collection of information on those who are to respond, including through the use of appropriate automated electronic, mechanical, or other technological collection techniques or other forms of information technology, *e.g.,* permitting electronic submission of responses.

Burden Statement: EPA estimates that approximately 1800 will be contacted, on average they will spend approximately 20 minutes each responding for a total burden of approximately 600 hours. The average reflects those who decline to participate (who will spend a short time reading the solicitation letter and discard it) as well as those who participate and will be asked a few additional questions about vehicle condition and maintenance. This collection is entirely voluntary, there are no recordkeeping requirements. Burden means the total time, effort, or financial resources expended by persons to generate, maintain, retain, or disclose or provide information to or for a Federal agency. This includes the time needed to review instructions; develop, acquire, install, and utilize technology and systems for the purposes of collecting, validating, and verifying information, processing and maintaining information, and disclosing and providing information; adjust the existing ways to comply with any previously applicable instructions and requirements; train personnel to be able to respond to a collection of information; search data sources; complete and review the collection of information; and transmit or otherwise disclose the information.

Dated: March 4, 2002

Robert Brenner,

Acting Assistant Administrator, Office of Air and Radiation.

[FR Doc. 02–5740 Filed 3–8–02; 8:45 am]

BILLING CODE 6560–50–M

ENVIRONMENTAL PROTECTION AGENCY

[FRL–7156–4]

Agency Information Collection Activities: Proposed Collection; Comment Request; National Emission Standards for Hazardous Air Pollutants (NESHAPs): Radionuclides

AGENCY: Environmental Protection Agency (EPA).

ACTION: Notice.

SUMMARY: In compliance with the Paperwork Reduction Act (44 U.S.C. 3501 *et seq.*), this notice announces that EPA is planning to submit the following continuing Information Collection Request (ICR) to the Office of Management and Budget (OMB): National Emission Standards for Hazardous Air Pollutants (NESHAPs): Radionuclides. The EPA ICR Number is 1100.11, and the OMB control number is 2060–0191 which is expiring on June 30, 2002. Before submitting the ICR to OMB for review and approval, EPA is soliciting comments on specific aspects of the proposed information collection as described below.

DATES: Comments must be submitted on or before May 10, 2002.

ADDRESSES: Office of Radiation and Indoor Air, Radiation Protection Division, Center for Waste Management, Environmental Protection Agency, 6608J, 1200 Pennsylvania Avenue, NW., Washington, DC 20460. Copies of the ICR may be obtained from Eleanor Thornton-Jones at the U.S. Environmental Protection Agency, Center for Waste Management, Radiation Protection Division, Office of Radiation and Indoor Air, 1200 Pennsylvania Avenue, NW., Washington, DC 20460–0001; Mail code: 6608J or by e-mail: *thornton.eleanord@epa.gov* or by phone (202) 564–9773.

FOR FURTHER INFORMATION CONTACT: Eleanor Thornton-Jones, telephone: (202) 564–9773, fax: (202) 565–2065, e-mail: *thornton.eleanord@epa.gov.*

SUPPLEMENTARY INFORMATION:

Affected Entities: Entities affected by this action are those which own or operate Department of Energy (DOE) facilities, elemental phosphorus plants, Non-DOE federal facilities and phosphogypsum stacks, underground uranium mines and uranium mill tailings piles.

Title: National Emission Standards for Hazardous Air Pollutants: Radionuclides, OMB No. 2060–0191, expiring 6/30/02.

Abstract: On December 15, 1989 pursuant to section 112 of the Clean Air Act as amended in 1977 (42 U.S.C. 1857), EPA promulgated NESHAPs to control radionuclide emissions from several source categories. The regulations were published in 54 FR 51653, and are codified at 40 CFR part 61, subparts B, H, I, K, R, T, and W. Due to petitions for reconsideration, EPA rescinded subpart T (July 15, 1994, 59 FR 36280) as it applies to owners and operators of uranium mill tailings disposal sites licensed by the Nuclear Regulatory Commission (NRC) or an affected Agreement State.

Currently, EPA has prepared a final rule amending subparts H and I; National Emission Standards for Emissions of Radionuclides Other Than Radon from Department of Energy Facilities and the National Emission Standards for Radionuclide Emissions from Federal Facilities Other Than Nuclear Regulatory Commission Licensees and Not Covered by Subpart H. (We are awaiting the Administrator's signature and expect this final rule amendment to be published in the **Federal Register** by the end of March 2002.) This amendment is a technical update to ensure that the best available science is being used to monitor radionuclide emissions from DOE and other federal facilities. Subparts H and I require emission sampling, monitoring and calculations to identify compliance with the standard. As applicable, subpart H and subpart I require sampling and monitoring of radionuclide air emissions in accordance with the guidance presented in the American National Standard Institute's (ANSI) Guide to Sampling Airborne Radioactive Materials in Nuclear Facilities, ANSI N13.1–1969. In 1999, this ANSI standard was revised and replaced by the new ANSI/HPS N13.1–1999 standard, entitled ''Sampling and Monitoring Releases of Airborne Radioactive Substances from the Stacks and Ducts of Nuclear Facilities.'' The standard for both subparts H and I requires that emissions of radionuclides to the ambient air shall not exceed those amounts that would cause any member of the public to receive in any year an effective dose equivalent of 10 millirem/yr. Also, for non-DOE federal facilities, emissions of iodine shall not exceed an effective dose equivalent of 3 millirem/yr to any member of the public.

The new ANSI standard provides regulated facilities greater flexibility in designing sampling systems while preserving protection of human health and the environment. The DOE facilities and non-DOE federal facilities other

than NRC licensees (such as Naval, Department of Defense, and other research and industrial facilities) will be required to adopt these updated sampling methods for any newly constructed or modified source requiring continuous sampling. Existing stacks not undergoing modification will not be required to upgrade to the new sampling standards; however, more rigorous inspections will be required to ensure that all sampling systems—both new and existing—function as intended.

EPA also has rescinded subpart I as it applies to NRC-licensed facilities, that became effective on December 30, 1996 (61 FR 68971). EPA's decision to rescind subpart I was based on NRC's promulgation of the constraint rule, 10 CFR part 20 (61 FR 65120, December 10, 1996), requiring licensees to establish a dose constraint for air emissions of radionuclides of 10 mrem/year total effective dose equivalent to members of the public. A 1992 survey conducted by EPA and data collected during the implementation of subpart I found no facility exceeding EPA's 10 mrem/yr effective dose equivalent standard. The existing subpart I of the radionuclide NESHAPs now only applies to non-DOE federal facilities not licensed by NRC.

Information is being collected pursuant to Federal regulation 40 CFR part 61. The pertinent sections of the regulation for reporting and record keeping are listed below for each source category:

Department of Energy Facilities—Sections 61.93, 61.94, 61.95
Elemental Phosphorous—Sections 61.123, 61.124, 61.126
Non-DOE Federal Facilities—Sections 61.103, 61.104, 61.105, 61.107
Phosphogypsum Stacks—Sections 61.203, 61.206, 61.207, 61.208, 61.209
Underground Uranium Mines—Sections 61.24, 61.25
Uranium Mill Tailings Piles—Sections 61.223, 61.224, 61.253, 61.254, 61.255,

Data and information collected is used by EPA to ensure that public health continues to be protected from the hazards of airborne radionuclides by compliance with NESHAPs. If the information were not collected, it is unlikely that potential violations of the standards would be identified and corrective action would be initiated to bring the facilities back into compliance. Compliance is demonstrated through emission testing and/or dose calculation. Results are submitted to EPA annually for verification of compliance and maintained for a period of 5 years. An agency may not conduct or sponsor, and a person is not required to respond to a collection of information unless it displays a currently valid OMB control number. The OMB control numbers for EPA's regulations are listed in 40 CFR part 9, and 48 CFR Chapter 15.

The EPA would like to solicit comments to:

(i) Evaluate whether the proposed collection of information is necessary for the proper performance of the functions of the agency, including whether the information will have practical utility;

(ii) Evaluate the accuracy of the agency's estimate of the burden of the proposed collection of information;

(iii) Enhance the quality, utility, and clarity of the information to be collected; and

(iv) Minimize the burden of the collection of information on those who are to respond, including through the use of appropriate automated collection techniques or other forms of information technology, e.g., permitting electronic submission of responses.

Burden Statement: Non-DOE Federal Facilities—Facilities may use written procedures or the COMPLY computer program for demonstrating compliance. These procedures and the COMPLY program were designed to reduce the burden on smaller facilities for determining compliance. The activities of the various respondents consist of reading and understanding the regulatory provisions and compliance procedures, identifying and listing input data, performing computer runs, preparing a report, and storing and maintaining data.

The estimated burden for each respondent is 32 hours per response. This estimate is based on experience gained in preparing radionuclide NESHAPs enforcement and compliance guidance material and in demonstrating the use of EPA's COMPLY computer program to the uninitiated.

40 CFR 61 Facilities—The estimates of this ICR renewal includes DOE facilities, elemental phosphorous plants, non-DOE federal facilities other than NRC licensees (such as Naval, Department of Defense, and other research and industrial facilities), phosphogypsum stacks, underground uranium mines and uranium mill tailings piles. Owners and operators of each facility must monitor and track emissions and calculate the highest effective dose equivalent. It is assumed that all facilities will perform emission testing so that EPA can ensure that the regulated facilities are in compliance with the standard, can identify violators, and prescribe corrective action to bring the facilities back into compliance. The DOE facilities and non-DOE federal facilities other than NRC licensees will be required to adopt the updated ANSI standard for sampling methods for any newly constructed or modified source requiring continuous sampling. Existing stacks not undergoing modification will not be required to upgrade to the new sampling standards; but will require more rigorous inspections to ensure that all sampling systems; both new and existing will function as intended. Activities consist of reading and understanding the regulatory provisions and compliance procedures, preparing a test plan, performing testing, performing data analysis, preparing a report, and storing and maintaining data.

Respondent	Number of Facilities
Department of Energy	40
Elemental Phosphorous	2
Non-DOE not licensed by NRC	20
Phosphogypsum Stacks	35
Underground Uranium Mines	7
Uranium Mill Tailings Piles (Subparts T and W)	13
Total	122

It is estimated that 122 facilities would be required to report emissions and/or effective dose equivalent annually and retain supporting records for five years. The total record keeping and reporting burden hours is 288 hours times 122 respondents = 35,136 hours. The estimated annualized capital/start up costs are: $45,000 and the annual operation and maintenance costs are $1,581,120.

Burden means the total time, effort, or financial resources expended by persons to generate, maintain, retain, or disclose or provide information to or for a Federal agency. This includes the time needed to review instructions; develop, acquire, install, and utilize technology and systems for the purposes of collecting, validating, and verifying information, processing and maintaining information, and disclosing and providing information.

Dated: March 5, 2002.

Bonnie Gitlin,

Acting Director, Radiation Protection Division, Office of Radiation and Indoor Air.

[FR Doc. 02–5745 Filed 3–8–02; 8:45 am]

BILLING CODE 6560–50–P

ENVIRONMENTAL PROTECTION AGENCY

[FRL–7155–5]

Agency Information Collection Activities; OMB Responses

AGENCY: Environmental Protection Agency (EPA).

ACTION: Notices.

SUMMARY: This document announces the Office of Management and Budget's (OMB) responses to Agency clearance request, in compliance with the Paperwork Reduction Act (44 U.S.C. 3501 *et seq.*). An agency may not conduct or sponsor, and a person is not required to respond to, a collection of information unless it displays a currently valid OMB control number. The OMB control numbers for EPA's regulations are listed in 40 CFR part 9 and 48 CFR chapter 15.

FOR FURTHER INFORMATION CONTACT: Susan Auby at 260–4901, or email at *Auby.susan@epa.gov.* and please refer to the appropriate EPA Information Collection Request (ICR) Number.

SUPPLEMENTARY INFORMATION:

OMB Responses to Agency Clearance Requests

OMB Approvals

EPA ICR No. 1860.02; Assessment of Compliance Assistance Projects; was approved 02/13/2002; OMB No. 2020–0015; expires 02/28/2005.

EPA ICR No. 0559.07; Application for Reference and Equivalent Method Determination; was approved 02/15/2002; OMB No. 2080–0005; expires 02/28/2005.

EPA No. 1591.14; Regulation of Fuels and Fuel Additives: Reformulated Gasoline Terminal Receipt Date; was approved 02/22/2002; OMB No. 2060–0277; expires 04/30/2004.

EPA No. 2015.01, Certification in Lieu of Chloroform Minimum Monitoring Requiring for Direct and Indirect Discharging Mills in the Bleached Papergrade Kraft and Soda Subcategory of the Public, Paper; was approved 02/15/2002; OMB No. 2020–0242; expires 02/28/2005.

EPA No. 1878.01; Minimum Monitoring Requirements for Direct and Indirect Discharging Mills in the Bleached Papergrade Kraft and Soda Subcategory and the Papergrade Sulfite Subcategory of the Pulp, Paper, was approved 02/25/2002; OMB No. 2020–0243; expires 02/28/2005.

Short Term Extensions

EPA ICR No. 0783.40; Motor Vehicle Emission Standards and Emission Credits Provisions; in 40 CFR parts 86 and 600; OMB No. 2060–0104; on 02/13/2002 OMB extended the expiration date through 03/31/2002.

Comment Filed

EPA ICR No. 1648.03, Control Technology Determination for Equivalent Emission Limitations by Permit; OMB No. 2060–0266; on 02/11/2002 OMB filed comment.

Dated: February 28, 2002.

Oscar Morales,

Director, Collection Strategies Division.

[FR Doc. 02–5741 Filed 3–8–02; 8:45 am]

BILLING CODE 6560–50–M

ENVIRONMENTAL PROTECTION AGENCY

[FRL–7155–6]

Agency Information Collection Activities; OMB Responses

AGENCY: Environmental Protection Agency (EPA).

ACTION: Notices.

SUMMARY: This document announces the Office of Management and Budget's (OMB) responses to Agency clearance requests, in compliance with the Paperwork Reduction Act (44 U.S.C. 3501 *et seq.*). An agency may not conduct or sponsor, and a person is not required to respond to, a collection of information unless it displays a currently valid OMB control number. The OMB control numbers for EPA's regulations are listed in 40 CFR part 9 and 48 CFR chapter 15.

FOR FURTHER INFORMATION CONTACT: Susan Auby at 260–4901, or e-mail at *Auby.susan@epa.gov,* and please refer to the appropriate EPA Information Collection Request (ICR) Number.

SUPPLEMENTARY INFORMATION:

OMB Responses to Agency Clearance Requests

OMB Approvals

EPA ICR No. 1947.02; National Emission Standards for Hazardous Air Pollutants: Solvent Extraction for Vegetable Oil Production; in 40 CFR part 63, subpart GGGG; was approved 01/03/2002; OMB No. 2060–0471; expires 01/31/2005.

EPA ICR No. 0107.07; Source Compliance and State Action Reporting; in 40 CFR part 51, subpart Q; was approved 01/04/2002; OMB No. 2060–0096; expires 01/31/2005.

EPA ICR No. 1626–07; National Recycling and Emissions Reduction Program; in 40 CFR part 82, subpart F; was approved 07/20/2000, OMB No. 2060–0256; expires 07/31/2003.

EPA ICR No. 1284.06; Standards of Performance for New Stationary Sources, Polymeric Coating of Supporting Substrates Facilities, 40 CFR part 60, subpart VVV; was approved 01/04/2002; OMB No. 2060–0181; expires 01/31/2005.

EPA ICR No. 0370.18; Underground Injection Control Program; in 40 CFR parts 144 through 148; was approved 01/09/2002; OMB No. 2040–0042; expires 01/31/2005.

EPA ICR No. 2058.01; Anthrax Decontamination Vendor Letter: Request for Test and supporting information to determine efficacy; was approved 01/15/2002; OMB No. 2050–0183; expires 06/30/2002.

EPA ICR No. 1741.03; Correction of Misreported Chemical Substances on the Toxic Substances Control Act (TSCA) Chemical Substances Inventory; in 40 CFR part 710; was approved 01/25/2002; OMB No. 2070–0145; expires 01/31/2005.

Comments Filed

EPA ICR No. 2029.01; National Emission Standards for Hazardous Air Pollutants: Asphalt Processing and Asphalt Roofing Manufacturing; in 40 CFR part 63, subpart LLLLL; on 01/03/2002 OMB filed comment.

Dated: February 28, 2002.

Oscar Morales,

Director, Collection Strategies Division.

[FR Doc. 02–5744 Filed 3–8–02; 8:45 am]

BILLING CODE 6560–50–P

ENVIRONMENTAL PROTECTION AGENCY

[FRL–7152–8]

Public Water System Supervision Program Revision for the State of Arkansas

AGENCY: Environmental Protection Agency (EPA).

ACTION: Notice of tentative approval.

SUMMARY: Notice is hereby given that the State of Arkansas is revising its approved Public Water System Supervision Program. Arkansas has adopted an Interim Enhanced Surface Water Treatment Rule to improve control of microbial pathogens in drinking water, including specifically the protozoan Cryptosporidium, and a Stage 1 Disinfectant/Disinfection Byproducts Rule, setting new requirements to limit the formation of chemical disinfectant byproducts in drinking water. EPA has determined

that these revisions are no less stringent than the corresponding federal regulations. Therefore, EPA intends to approve these program revisions.

All interested parties may request a public hearing. A request for a public hearing must be submitted by April 10, 2002, to the Regional Administrator at the EPA Region 6 address shown below. Frivolous or insubstantial requests for a hearing may be denied by the Regional Administrator. However, if a substantial request for a public hearing is made by April 10, 2002, a public hearing will be held. If no timely and appropriate request for a hearing is received and the Regional Administrator does not elect to hold a hearing on his own motion, this determination shall become final and effective on April 10, 2002. Any request for a public hearing shall include the following information: The name, address, and telephone number of the individual, organization, or other entity requesting a hearing; a brief statement of the requesting person's interest in the Regional Administrator's determination and a brief statement of the information that the requesting person intends to submit at such hearing; and the signature of the individual making the request, or, if the request is made on behalf of an organization or other entity, the signature of a responsible official of the organization or other entity.

ADDRESSES: All documents relating to this determination are available for inspection between the hours of 8 a.m. and 4:30 p.m., Monday through Friday, at the following offices: Arkansas Department of Health, Division of Engineering—Slot #37, 4815 West Markham, Little Rock, Arkansas 72205 and United States Environmental Protection Agency, Region 6, Drinking Water Section (6WQ–SD), 1445 Ross Avenue, Suite 1200, Dallas, Texas 75202.

FOR FURTHER INFORMATION CONTACT: José G. Rodriguez, EPA Region 6, Drinking Water Section at the Dallas address given above or at telephone (214) 665–8087.

Authority: (Section 1413 of the Safe Drinking Water Act, as amended (1996), and 40 CFR part 142 of the National Primary Drinking Water Regulations).

Dated: February 22, 2002.

Lawrence Starfield,

Acting Regional Administrator, Region 6.

[FR Doc. 02–5182 Filed 3–8–02; 8:45 am]

BILLING CODE 6560–50–P

FEDERAL COMMUNICATIONS COMMISSION

Public Information Collections Approved by Office of Management and Budget

March 4, 2002.

The Federal Communications Commission (FCC) has received Office of Management and Budget (OMB) approval for the following public information collections pursuant to the Paperwork Reduction Act of 1995, Pub. L. 104–13. An agency may not conduct or sponsor and a person is not required to respond to a collection of information unless it displays a currently valid control number. For further information contact Shoko B. Hair, Federal Communications Commission, (202) 418–1379.

Federal Communications Commission

OMB Control No.: 3060–0463.

Expiration Date: 07/31/2002.

Title: Telecommunications Services for Individuals with Hearing and Speech Disabilities and the Americans with Disabilities Act of 1990, 47 CFR part 64 (Sections 64.601–64.605).

Form No.: N/A.

Respondents: Business or other for-profit.

Estimated Annual Burden: 5052 respondents; 5.31 hour per response (avg.); 26,831 total annual burden hours (for all collections under this control number).

Estimated Annual Reporting and Recordkeeping Cost Burden: $0.

Frequency of Response: On occasion; Every five years; Recordkeeping; Third Party Disclosure.

Description: In the *Memorandum Opinion and Order and Further Notice of Proposed Rulemaking* issued in CC Docket No. 98–67, released December 21, 2001 (MO&O), the Commission adopts three of the four recommendations for traditional TRS: (1) The Commission directs the TRS administrator to use the average per minute costing methodology to develop the interstate cost recovery mechanism for traditional TRS; (2) the Commission also directs the TRS administrator to review the TRS Center Data Request, and report to the Chief of the Common Carrier Bureau, on an ongoing basis, any changes necessary to ensure that TRS providers are compensated for additional costs imposed by the *Improved TRS Order;* and (3) the Commission directs that the same minutes of use allocation methodology in place for toll-free call minutes should be used for 900 call minutes. In the *MO&O,* the Commission also adopts the four recommendations for STS cost recovery: (1) The Commission directs the TRS administrator to use the same average per minute costing methodology cost recovery mechanism for traditional TRS for STS; (2) the Commission adopts a separate per-minute national average compensation formula for STS and directs the TRS administrator to develop annually a national average STS reimbursement rate for compensating STS providers; (3) because STS service is of a more recent origin, the Commission adopts the Advisory Council and the Fund Administrator's recommendation that the TRS Center Data Request be expanded to capture separately STS costs and minutes; and (4) as with traditional TRS, each provider of STS services will be compensated at the national average rate for every completed conversation minute. In the *MO&O,* the Commission also states that due to the unique characteristics of VRS, a separate reimbursement rate for VRS should be calculated. The Commission also agrees with the Advisory Council and the Fund Administrator's recommendation that the TRS Center Data Request should be expanded to include specific sections to capture separately VRS costs and minutes for this service. Thus, the Commission requires NECA to expand the TRS Data Request to include data that are specific to VRS. By promoting the efficient and effective means of cost recovery for TRS services, these collection requirements should help to advance a procompetitive, deregulatory national policy framework for telecommunications services, a key goal of the Telecommunications Act of 1996. Other information collections unaffected by the MO&O remain in place as currently approved by OMB.

Obligation to respond: Mandatory.

OMB Control No.: 3060–0519.

Expiration Date: 02/28/2005.

Title: Rules and Regulations Implementing the Telephone Consumer Protection Act of 1991 (CC Docket No. 92–06).

Form No.: N/A.

Respondents: Business or other for-profit.

Estimated Annual Burden: 30,000 respondents; 31.2 hours per response (avg.); 936,000 total annual burden hours.

Estimated Annual Reporting and Recordkeeping Cost Burden: $0.

Frequency of Response: On occasion; Recordkeeping..

Description: In CC Docket No. 92–60, the Commission implemented rules pursuant to the requirements of the Telephone Consumer Protection Act of 1991, Public Law 102–243, December

20, 1991 (TCPA) which added Section 227 to the Communications Act of 1934, as amended, to restrict the use of automatic telephone dialing systems, artificial or prerecorded messages, facsimile machines or other devices to send unsolicited advertisements. The rules require that telephone solicitors maintain and use company-specific lists of residential subscribers who request not to receive further telephone calls (company-specific do-not-call lists), thereby affording consumers the choice of which solicitors if any, they will hear from by telephone. Telephone solicitors also are required to have a written policy for maintaining do-not-call lists, and are responsible for informing and training their personnel the existence and use of such lists. See 47 CFR Section 64.1200(e)(i). The rules require that those making telephone solicitations identify themselves to called parties, and that basic identifying information also be included in telephone facsimile transmissions. See 47 CFR Sections 64.1200(e)(iv) and 68.318(c)(3). The Commission believes that these rules are the best means of preventing unwanted telephone solicitations. *Obligation to respond:* Mandatory.

OMB Control No.: 3060–0653.

Expiration Date: 02/28/2005.

Title: Sections 64.703(b) and (c)—Consumer Information—Posting by Aggregators.

Form No.: N/A. .

Respondents: Business or other for-profit.

Estimated Annual Burden: 56,200 respondents; 3.67 hour per response (avg.); 206,566 total annual burden hours.

Estimated Annual Reporting and Recordkeeping Cost Burden: $0.

Frequency of Response: On occasion; Third Party Disclosure.

Description: Section 226(c)(1)(A) of the Communications Act and Section 64.703(b) of the Commission's rules require that each aggregator post on or near the telephone instrument in plain view of consumers: (1) The name, address, and toll-free telephone number of the provider of operator services; (2) written disclosure that the rates for all operator-assisted calls are available on request, and that consumers have a right to obtain access to the interstate common carrier of their choice and may contact their preferred interstate common carriers for information on accessing that carrier's service using that telephone; and (3) the name and address of the Consumer Information Bureau of the Commission, to which the consumer may direct complaints regarding operator services. This requirement was a response to a widespread failure of aggregators to disclose information necessary for informed consumer choice in the marketplace. See 47 CFR Section 64.703(b). In the Second Order on Reconsideration in CC Docket No. 92–77, the Commission amended section 64.703(b)(4) to require that the new bureau's (Consumer Information Bureau) name and address be posted on payphones in future postings. The Consumer Information Bureau, is now the appropriate recipient of consumer complaints about OSPs. Section 64.703(c) establishes a 30-day outer limit for aggregators to update the posted information. An aggregator may meet the 30-day outer limit rule, where its maintenance technicians would not otherwise visit the particular payphone location within 30 days, by having its coin collection or other agent affix a temporary sticker to the payphone. Such temporary sticker must be replaced with permanent signage during the next regularly scheduled maintenance visit. Section 64.703(c) is intended to provide updated OSP information to consumers and enable consumers to make informed choices when placing operator service calls. See 47 CFR Section 64.703(c). Aggregators will disclose the required information to consumers via printed notice that is posted on or near each of the aggregator's phones. Pursuant to Section 64.703(c), this information must be updated within 30 days in changes of OSPs. Consumers will use this information to determine whether they wish to use the services of the identified OSP. *Obligation to respond:* Mandatory.

OMB Control No.: 3060–0823.

Expiration Date: 2/28/2005.

Title: Pay Telephone Reclassification Memorandum Opinion and Order, CC Docket No. 96–128.

Form No.: N/A.

Respondents: Business or other for-profit.

Estimated Annual Burden: 400 respondents; 111.75 hour per response (avg.); 44,700 total annual burden hours.

Estimated Annual Reporting and Recordkeeping Cost Burden: $480,000.

Frequency of Response: On occasion; Recordkeeping; Third Party Disclosure.

Description: In the Payphone Orders, the Commission adopted rules and policies governing the payphone industry to implement section 276 of the Telecommunications Act of 1996. Those rules and policies in part establish a plan to ensure fair compensation for ''each and every completed intrastate and interstate call using [a] payphone.'' Specifically, the Commission established a plan to ensure that payphone service providers (PSPs) were compensated for certain noncoin calls originated from their payphones. In a Memorandum Opinion and Order issued in CC Docket No. 96–128 (Order), the Commission clarified requirements established in the Payphone Orders for the provision of payphone-specific coding digits. The following collections of information implement section 276 of the Act. The collection requirements are as follows:

a. *LEC Tariff to provide FLEX ANI to IXCs:* Local exchange carriers (LECs) must implement FLEX ANI to comply with the requirements set forth in the Payphone Orders. LECs must provide to IXCs through their interstate tariffs, FLEX ANI service so that IXCs can identify which calls come from a payphone. LECs (and PSPs) must provide FLEX ANI to IXCs without charge for the limited purpose of per-call compensation, and accordingly, LECs providing FLEX ANI must revise their interstate tariffs to reflect FLEX ANI as a nonchargeable option to IXCs no later than March 30, 1998, to be effective no later than April 15, 1998, in those areas that it is available. (No. of respondents: 400; hours per response: 35 hours; total annual burden: 14,000 hours.)

b. *LEC Tariff to recover costs:* LECs must file a tariff to establish a rate element in their interstate tariffs to recover their costs from PSPs for providing payphone-specific coding digits to IXCs. This tariff must reflect the costs of implementing FLEX ANI to provide payphone-specific coding digits for payphone compensation, and provide for recovery of such costs over a reasonable time period through a monthly recurring flat-rate charge. LECs must provide cost support information for the rate elements they propose. The Bureau will review these LEC rate element tariff filings, the reasonableness of the costs, and the recovery period. LECs will recover their costs over an amortization period of no more than ten years. The rate element charges will discontinue when the LEC has recovered its cost. (No. of respondents: 400; hours per response: 35 hours; total annual burden 14,000 hours.)

c. *LECs must provide IXCs information on payphones that provide payphone-specific coding digits for smart and dumb payphones:* LECs must provide IXCs information on the number and location of smart and dumb payphones providing payphone-specific coding digits, as well as the number of those that are not. (No. of respondents: 400; hours per response: 24 hours; total annual burden: 9600 hours.)

d. *LECs must provide IXCs and PSPs information on where FLEX ANI is*

available now and when it is to be scheduled in the future: Within 30 days of the release of the MO&O, LECs should be prepared to provide IXCs, upon request, information regarding their plans to implement FLEX ANI by end office. LECs must provide IXCs and PSPs information on payphones that provide payphone-specific coding digits on end offices where FLEX ANI is available, and where it is not, on a monthly basis. Pursuant to the waivers in this order, LECs must also inform IXCs and PSPs proposed dates for its availability. (No. of respondents: 400; hours per response: 16 hours; total annual burden: 6400 hours.)

e. *For a waiver granted to small or midsize LECs, a cost analysis must be provided, upon request:* In the MO&O, the Bureau grants a waiver to midsize and small LECs that will be unable to recover the costs of implementing FLEX ANI in a reasonable time period. LECs must make this evaluation within 30 days of the release of the MO&O. The LEC must then notify IXCs that they will not be implementing FLEX ANI pursuant to this waiver, and provide the number of dumb payphones providing the ''27'' coding digit and the number of smart phones for which payphone-specific coding digits are unavailable. A LEC delaying the implementation of FLEX ANI pursuant to this waiver provision must be prepared to provide its analysis, if requested by the Commission. (No. of respondents: 20; hours per response: 35 hours; total annual burden: 700 hours.) The information disclosure rules and policies governing the payphone industry to implement section 276 of the Act will ensure the payment of per-call compensation by implementing a method for LECs to provide information to IXCs to identify calls, for each and every call made from a payphone. Obligation to respond: Required to obtain or retain benefits.

Public reporting burden for the collections of information are as noted above. Send comments regarding the burden estimates or any other aspect of the collections of information, including suggestions for reducing the burden to Performance Evaluation and Records Management, Washington, DC 20554.

Federal Communications Commission.

William Caton,

Acting Secretary.

[FR Doc. 02–5677 Filed 3–8–02; 8:45 am]

BILLING CODE 6712–01–P

FEDERAL COMMUNICATIONS COMMISSION

Notice of Public Information Collection(s) being Submitted to OMB for Review and Approval

March 4, 2002.

SUMMARY: The Federal Communications Commissions, as part of its continuing effort to reduce paperwork burden invites the general public and other Federal agencies to take this opportunity to comment on the following information collection, as required by the Paperwork Reduction Act of 1995, Public Law 104–13. An agency may not conduct or sponsor a collection of information unless it displays a currently valid control number. No person shall be subject to any penalty for failing to comply with a collection of information subject to the Paperwork Reduction Act (PRA) that does not display a valid control number. Comments are requested concerning (a) whether the proposed collection of information is necessary for the proper performance of the functions of the Commission, including whether the information shall have practical utility; (b) the accuracy of the Commission's burden estimate; (c) ways to enhance the quality, utility, and clarity of the information collected; and (d) ways to minimize the burden of the collection of information on the respondents, including the use of automated collection techniques or other forms of information technology.

DATES: Written comments should be submitted on or before April 10, 2002. If you anticipate that you will be submitting comments, but find it difficult to do so within the period of time allowed by this notice, you should advise the contact listed below as soon as possible.

ADDRESSES: Direct all comments to Les Smith, Federal Communications Commission, Room 1–A804, 445 12th Street, SW., Washington, DC 20554 or via the Internet to *lesmith@fcc.gov*.

FOR FURTHER INFORMATION CONTACT: For additional information or copies of the information collections contact Les Smith at (202) 418–0217 or via the Internet at *lesmith@fcc.gov*.

SUPPLEMENTARY INFORMATION:

OMB Control Number: 3060–0065.

Title: Application for New or Modified Radio Station Authorization Under Part 5 of FCC Rules, Experimental Radio Service (Other than Broadband).

Form Number: FCC 442.

Type of Review: Extension of a currently approved collection.

Respondents: Business or other for-profit entities; Not-for-profit institutions; and State, local, or tribal governments.

Number of Respondents: 700.

Estimated Time Per Response: 4 hrs.

Frequency of Response: Recordkeeping; On occasion reporting requirement.

Total Annual Burden: 2,800 hrs.

Total Annual Costs: None.

Needs and Uses: Applicants must file FCC Form 442 under 47 CFR Sections 5.55(a), (b), and (c) of FCC Rules to obtain a license to operate a new or modified experimental radio station. The Commission uses the data obtained from Form 442 to if the applicant is eligible for an experimental license; the purpose of the experiment; compliance with the requirements of 5 CFR part 5 of FCC Rules; and if the proposed operation will cause interference to existing operations.

OMB Control Number: 3060–0149.

Title: Application and Supplemental Information Requirements—Part 63, Section 214, Sections 63.01–63.601.

Form Number: N/A.

Type of Review: Revision of a currently approved collection.

Respondents: Business or other for-profit entities.

Number of Respondents: 255.

Estimated Time Per Response: 10 hrs. (avg.).

Frequency of Response: Recordkeeping; On occasion reporting requirements; Third party disclosure.

Total Annual Burden: 2,550 hrs.

Total Annual Costs: None.

Needs and Uses: Section 214 of the Communications Act of 1934, as amended, requires that the FCC review the establishment, lease, operations, and extension of channels of communications by interstate common carriers. 47 CFR part 63 implements section 214. part 63 also implements provisions of the Cable Communications Policy Act of 1984 pertaining to video programming by telephone common carriers. The Commission uses the information it receives in applications from dominant carriers to determine if the facilities are needed. The information received from non-dominant carriers is used to monitor the growth of the networks and the availability of common carrier services.

OMB Control Number: 3060–0484.

Title: Amendment of part 63 of the Commission's Rules to Provide for Notification of Common Carriers of Service Disruptions, section 63.100.

Form Number: N/A.

Type of Review: Extension of a currently approved collection.

Respondents: Businesses or other for-profit entities.

Number of Respondents: 52.

Estimated Time Per Response: 5 hrs.

Frequency of Response: On occasion reporting requirements.

Total Annual Burden: 1,040 hrs.

Total Annual Costs: None.

Needs and Uses: 47 CFR 63.100 of the FCC Rules requires local exchange or interexchange common carriers that operate transmission or switching facilities and provide access service or interstate or international communications services that experience outages on any facilities that they own or operate to notify the FCC if the service outage continues for 30 or more minutes. Carriers must file an initial and final service outage report. The FCC uses these reports to monitor developments affecting telecommunications reliability; to serve as a source of public information; to encourage and, where appropriate, to assist in dissemination of information to those affected; and to take immediate steps, as needed, and after analyzing the information, to determine what, if any, additional action is required.

OMB Control Number: 3060–0856

Title: Universal Service—Schools and Libraries Universal Service Program Reimbursement Forms.

Form Number: FCC 472, 473, and 474.

Type of Review: Extension of a currently approved collection.

Respondents: Businesses or other for-profit entities; and Not-for-profit institutions.

Number of Respondents: 61,800.

Estimated Time Per Response: 1.0 to 1.5 hrs.

Frequency of Response: On occasion reporting requirements; Third party disclosure.

Total Annual Burden: 88,050 hrs.

Total Annual Costs: None.

Needs and Uses: The Telecommunications Act of 1996 contemplates that discounts on eligible services shall be provided to schools and libraries, and that service providers shall seek reimbursement for the amount of the discounts. Service providers/vendors that participate in the universal service support are assigned a service provider identification number (SPIN). The fund administrator uses FCC Form 472, Billed Entity Applicant Reimbursement Form, to pay universal service support to service providers who give discounted services to eligible schools, libraries, and consortia of those entities. Service provider/vendors use FCC Form 473, Service Provider Annual Certification Form, to confirm that they are in compliance with the FCC's rules governing the schools and libraries universal service support mechanism. In addition, service providers/vendors use FCC Form 474, Service Provider Invoice Form, to seek reimbursement for the cost of discounts that they give to eligible entities for eligible services.

OMB Control Number: 3060–0995.

Title: Amendment of Part 1 of the Commission's Rules—Competitive Bidding Procedures, 47 CFR Section 1.2105(c)(1) of the Commission's Rules (Anti-Collusion).

Form Number: N/A.

Type of Review: Extension of a currently approved collection.

Respondents: Business or other for-profit entities; Individuals or households; Not-for-profit institutions; and State, local, or tribal governments.

Number of Respondents: 10.

Estimated Time Per Response: 5 hours.

Frequency of Response: On occasion reporting requirements.

Total Annual Burden: 50 hours.

Total Annual Costs: None.

Needs and Uses: The information requirement will enable the FCC to ensure that no bidder gains an unfair advantage over other bidders in its spectrum auctions, and thus enhance the competitiveness and fairness of its auctions. The Commission will review the information collected will review and, if warranted, refer it to the Commission's Enforcement Bureau for possible investigation and administrative action. The Commission may also refer allegations of anticompetitive auction conduct to the Department of Justice for investigation.

Federal Communication Commission.

William F. Caton,

Acting Secretary.

[FR Doc. 02–5784 Filed 3–8–02; 8:45 am]

BILLING CODE 6712–01–P

FEDERAL COMMUNICATIONS COMMISSION

[CC Docket No. 02–39; FCC 02–57]

Review of the Equal Access and Nondiscrimination Obligations Applicable to Local Exchange Carriers

AGENCY: Federal Communications Commission

ACTION: Notice.

SUMMARY: This document initiates an inquiry to examine the continued importance of the equal access and nondiscrimination obligations of section 251(g) of the Communications Act of 1934, as amended (the Act). This document also seeks to develop a baseline record regarding the current state of equal access and nondiscrimination requirements. As such, it seeks comment on the existing equal access and nondiscrimination obligations of Bell Operating Companies (BOCs), both with and without section 271 authority. The Commission also seeks comment on the equal access and nondiscrimination obligations of incumbent independent local exchange carriers (LECs) and competitive LECs. Then, the Commission asks commenters what the equal access and nondiscrimination requirements of all these carriers should be, considering the many legal and marketplace changes that have transpired since the earlier requirements were adopted.

DATES: Comments are due May 10, 2002, and reply comments are due June 10, 2002.

FOR FURTHER INFORMATION CONTACT: Julie Veach, Attorney-Advisor, Policy and Program Planning Division, Common Carrier Bureau, at (202) 418–1558, or via the Internet at *jveach@fcc.gov.*

SUPPLEMENTARY INFORMATION: This is a summary of the Commission's Notice of Inquiry (NOI) in CC Docket No. 02–39, FCC 02–57, adopted February 19, 2002, and released February 28, 2002. The complete text of this NOI is available for inspection and copying during normal business hours in the FCC Reference Information Center, Portals II, 445 12th Street, SW., Room CY–A257, Washington, DC, 20554. This document may also be purchased from the Commission's duplicating contractor, Qualex International, Portals II, 445 12th Street, SW., Room CY–B402, Washington, DC 20554, telephone 202–863–2893, facsimile 202–863–2898, or via e-mail *qualexint@aol.com.* It is also available on the Commission's Web site at *http://www.fcc.gov.*

Synopsis of the Notice of Inquiry (NOI)

1. The Commission's goals in conducting this inquiry are: (1) To facilitate an environment that will be conducive to competition, deregulation and innovation; (2) to establish a modern equal access and nondiscrimination regulatory regime that will benefit consumers; (3) to balance regulatory costs against these benefits, and (4) to harmonize the requirements of similarly-situated carriers as much as possible.

2. *Background.* By adopting the Telecommunications Act of 1996 (1996 Act), Congress sought to lay the foundation for pro-competitive, deregulatory telecommunications policies that facilitate investment in and deployment of advanced services to all

Americans. Mindful that competition would not develop in all markets immediately, Congress left in place certain safeguards, such as section 251(g). That statutory provision preserves the equal access and nondiscrimination requirements that were established for LECs ''under any court order, consent decree, or regulation, order, or policy of the Commission'' prior to passage of the 1996 Act. Notably, section 251(g) imports the obligations of the Modification of Final Judgment (MFJ), the consent decree that settled the Department of Justice's antitrust suit against AT&T and required divestiture of the BOCs, as well as Commission equal access requirements. Section 251(g) grants the Commission authority to prescribe regulations superseding pre-existing equal access and nondiscrimination obligations.

3. First, the Commission seeks comment on how it should go about changing or eliminating any existing equal access and nondiscrimination requirements, should it decide to do so. Specifically, section 251(g) states that all pre-1996 Act requirements continue to apply ''until such restrictions and obligations are explicitly superseded by regulations prescribed by the Commission.'' Congress expected that ''[w]hen the Commission promulgates its new regulations, * * * the Commission will explicitly identify those parts of the interim restrictions and obligations that it is superseding so that there is no confusion as to what restrictions and obligations remain in effect.'' The Commission asks whether it should adopt new rules to replace the existing section 251(g) requirements, or is it enough for the Commission to state in an order that such requirements are no longer necessary in the wake of the 1996 Act? Alternatively, it asks whether the Commission should forbear from such requirements to the extent they meet the standards of 47 U.S.C. 160?

4. *Changing Market Conditions.* The Commission seeks comment on what equal access and nondiscrimination requirements were carried through from the MFJ, to which carriers these requirements apply, and the extent to which these requirements are relevant today. The Commission further seeks comment on whether the goals underlying section 251(g) can be achieved through any other means, including reliance on other provisions of section 251 and the requirements that the Commission has imposed pursuant to those provisions. It further asks how sections 201 and 202, and the Commission's orders interpreting those sections, affect the need for separate equal access and nondiscrimination requirements in light of current marketplace conditions, including the state of competition in the local market and BOC entry into the long distance market.

5. *Bell Operating Companies.* The Commission seeks comment on the existing equal access and nondiscrimination requirements of BOCs, which include the line of cases stemming from the MFJ. It also seeks comment on what the BOCs' equal access and nondiscrimination obligation should be, whether changes in equal access and nondiscrimination requirements are now needed for BOCs and what changes are appropriate. Should BOCs be required to provide information regarding all available interexchange carriers? What kind of marketing arrangements between BOCs and other carriers are permissible? What is the relationship between sections 251(g) and 272?

6. *Incumbent Independent Local Exchange Carriers.* Section 251(g) also imports equal access and nondiscrimination requirements that existed for incumbent independent LECs prior to the 1996 Act. The Commission seeks comment on what, if any, ''order, consent decree, or regulation, order, or policy of the Commission'' applies to incumbent independent LECs. It also asks what the regulatory costs to these carriers are under the current equal access and nondiscrimination requirements and whether those requirements should continue to apply to incumbent independent LECs in view of the new competitive paradigm contemplated by the 1996 Act. The Commission also asks for comment on the extent to which it can harmonize the obligations of incumbent independent LECs that provide interLATA services through a separate affiliate with the obligations of other LECs that provide interLATA services through a separate affiliate, and the extent to which it can harmonize the obligations of incumbent independent LECs that provide interLATA services on an integrated basis with the obligations of other LECs that provide interLATA services on an integrated basis.

7. *Competitive Local Exchange Carriers.* The Commission also seeks comment on the existing equal access and nondiscrimination obligations that apply to competitive LECs. What Commission orders or other law impose equal access and nondiscrimination requirements on non-incumbent LECs today, and what are the regulatory costs to these carriers of those requirements? What, if any, should the equal access and nondiscrimination obligations of competitive LECs be? Can the Commission harmonize the obligations of competitive LECs with the obligations of other LECs that provide interLATA services on an integrated basis?

Federal Communications Commission.

William F. Caton,

Acting Secretary.

[FR Doc. 02–5673 Filed 3–8–02; 8:45 am]

BILLING CODE 6712–01–P

FEDERAL COMMUNICATIONS COMMISSION

Technological Advisory Council Meeting Postponed

AGENCY: Federal Communications Commission.

ACTION: Notice of cancellation of public meeting.

SUMMARY: In accordance with the Federal Advisory Committee Act, 5 U.S.C. App. 2, Public Law 92–463, as amended, this notice advises interested persons that the meeting of the Technological Advisory Council scheduled for March 20, 2002 has been cancelled and will be rescheduled at a later date.

FOR FURTHER INFORMATION CONTACT: Jeffery Goldthorp, *jgoldtho@fcc.gov,* or 202–418–1096.

Federal Communications Commission.

William F. Caton,

Acting Secretary.

[FR Doc. 02–5674 Filed 3–8–02; 8:45 am]

BILLING CODE 6712–01–P

FEDERAL COMMUNICATIONS COMMISSION

[Report No. 2534]

Petition for Clarification and Waiver of Action in Rulemaking Proceeding

March 4, 2002.

Petition for Clarification and Waiver has been filed in the Commission's rulemaking proceeding listed in this Public Notice and published pursuant to 47 CFR 1.429(e). The full text of this document is available for viewing and copying in Room CY–A257, 445 12th Street, SW., Washington, DC or may be purchased from the Commission's copy contractor, Qualex International (202) 863–2893. Oppositions to this petition must be filed by March 26, 2002. See section 1.4(b)(1) of the Commission's rules (47 CFR 1.4(b)(1)). Replies to an opposition must be filed within 10 days after the time for filing oppositions has expired.

Subject: Billed Party Preference for O + Interlata Calls (CC Docket No. 92–77).

Number of Petitions Filed: 1.

William F. Caton,

Acting Secretary.

[FR Doc. 02–5678 Filed 3–8–02; 8:45 am]

BILLING CODE 6212–01–M

FEDERAL COMMUNICATIONS COMMISSION

[Report No. 2535]

Petition for Reconsideration of Action in Rulemaking Proceeding

March 5, 2002.

Petition for Reconsideration has been filed in the Commission's rulemaking proceeding listed in this Public Notice and published pursuant to 47 CFR 1.429(e). The full text on this document is available for viewing and copying in Room CY–A257, 445 12th Street, SW., Washington, DC or may be purchased from the Commission's copy contractor, Qualex International (202) 863–2893. Oppositions to this petition must be filed by March 26, 2002. See section 1.4(b)(1) of the Commission's rules (47 CFR 1.4(b)(1)). Replies to an opposition must be filed within 10 days after the time for filing oppositions has expired.

Subject: Amendment of part 67 of the Commission's Rules and Establishment of a Joint Board (CC Docket No. 80–286).

Numbers of Petitions Filed: 1.

William F. Caton,

Acting Secretary.

[FR Doc. 02–5679 Filed 3–8–02; 8:45 am]

BILLING CODE 6712–01–M

FEDERAL ELECTION COMMISSION

Sunshine Act Meeting

Date & Time: Thursday, March 14, 2002 at 10 a.m.

Place: 999 E Street, NW., Washington, DC (Ninth Floor).

Status: This meeting will be open to the public.

The following item has been added to the agenda: Topics for Administrative Fines Rulemaking.

PERSON TO CONTACT FOR INFORMATION: Mr. Ron Harris, Press Officer, Telephone: (202) 694–1220.

Mary W. Dove,

Secretary of the Commission.

[FR Doc. 02–5859 Filed 3–7–02; 11:51 am]

BILLING CODE 6715–01–M

FEDERAL RESERVE SYSTEM

Formations of, Acquisitions by, and Mergers of Bank Holding Companies

The companies listed in this notice have applied to the Board for approval, pursuant to the Bank Holding Company Act of 1956 (12 U.S.C. 1841 *et seq.*) (BHC Act), Regulation Y (12 CFR part 225), and all other applicable statutes and regulations to become a bank holding company and/or to acquire the assets or the ownership of, control of, or the power to vote shares of a bank or bank holding company and all of the banks and nonbanking companies owned by the bank holding company, including the companies listed below.

The applications listed below, as well as other related filings required by the Board, are available for immediate inspection at the Federal Reserve Bank indicated. The application also will be available for inspection at the offices of the Board of Governors. Interested persons may express their views in writing on the standards enumerated in the BHC Act (12 U.S.C. 1842(c)). If the proposal also involves the acquisition of a nonbanking company, the review also includes whether the acquisition of the nonbanking company complies with the standards in section 4 of the BHC Act (12 U.S.C. 1843). Unless otherwise noted, nonbanking activities will be conducted throughout the United States. Additional information on all bank holding companies may be obtained from the National Information Center website at www.ffiec.gov/nic/.

Unless otherwise noted, comments regarding each of these applications must be received at the Reserve Bank indicated or the offices of the Board of Governors not later than April 5, 2002.

A. Federal Reserve Bank of Cleveland (Stephen J. Ong, Vice President) 1455 East Sixth Street, Cleveland, Ohio 44101–2566:

1. Charter One Financial, Inc., Cleveland, Ohio; to acquire and merge with Charter National Bancorp, Inc., Taylor, Michigan, and thereby acquire Charter Bank, Wyandotte, Michigan.

Board of Governors of the Federal Reserve System, March 6, 2002.

Robert deV. Frierson,

Deputy Secretary of the Board.

[FR Doc. 02–5829 Filed 3–8–02; 8:45 am]

BILLING CODE 6210–01–S

FEDERAL RESERVE SYSTEM

Notice of Proposals to Engage in Permissible Nonbanking Activities or to Acquire Companies that are Engaged in Permissible Nonbanking Activities

The companies listed in this notice have given notice under section 4 of the Bank Holding Company Act (12 U.S.C. 1843) (BHC Act) and Regulation Y (12 CFR Part 225) to engage *de novo*, or to acquire or control voting securities or assets of a company, including the companies listed below, that engages either directly or through a subsidiary or other company, in a nonbanking activity that is listed in § 225.28 of Regulation Y (12 CFR 225.28) or that the Board has determined by Order to be closely related to banking and permissible for bank holding companies. Unless otherwise noted, these activities will be conducted throughout the United States.

Each notice is available for inspection at the Federal Reserve Bank indicated. The notice also will be available for inspection at the offices of the Board of Governors. Interested persons may express their views in writing on the question whether the proposal complies with the standards of section 4 of the BHC Act. Additional information on all bank holding companies may be obtained from the National Information Center website at www.ffiec.gov/nic/.

Unless otherwise noted, comments regarding the applications must be received at the Reserve Bank indicated or the offices of the Board of Governors not later than March 25, 2002.

A. Federal Reserve Bank of New York (Betsy Buttrill White, Senior Vice President) 33 Liberty Street, New York, New York 10045–0001:

1. Barclays Plc and Barclays Bank, both of London, England; to acquire Digital Signature Trust Company, Salt Lake City, Utah, and thereby indirectly engage through Identrus, LLC, New York, New York, in certification authority activities, and other incidental activities relating to the certification authority activities, pursuant to Bayer Hypo- und Verinsbank AG 86 Fed. Res. Bull. 56 (2000).

Board of Governors of the Federal Reserve System, March 5, 2002.

Robert deV. Frierson,

Deputy Secretary of the Board.

[FR Doc.02–5772 Filed 3–8–02; 8:45 am]

BILLING CODE 6210–01–S

DEPARTMENT OF HEALTH AND HUMAN SERVICES

Food and Drug Administration

[Docket No. 02D–0032]

Guidance for Industry; Implementation of Section 755 of the Agriculture, Rural Development, Food and Drug Administration, and Related Agencies Appropriations Act of 2002, Pub. L. No. 107–76, § 755 (2001) Regarding Common or Usual Names for Catfish; Availability; Correction

AGENCY: Food and Drug Administration, HHS.

ACTION: Notice; correction.

SUMMARY: The Food and Drug Administration (FDA) is correcting a notice that appeared in the **Federal Register** of February 6, 2002 (67 FR 5604). The document announced the availability of a document entitled ''Guidance for Industry; Implementation of Section 755 of the Agriculture, Rural Development, Food and Drug Administration, and Related Agencies Appropriations Act of 2002, Pub. L. 107–76, § 755 (2001) Regarding Common or Usual Names for Catfish.'' The document was inadvertently published without the mailing address for the Dockets Management Branch. This document corrects that error.

FOR FURTHER INFORMATION CONTACT: Doris B. Tucker, Office of Policy (HF–27), Food and Drug Administration, 5600 Fishers Lane, Rockville, MD 20857, 301–827–7010.

In FR Doc. 02–2753, appearing on page 5604 in the **Federal Register** of Wednesday, February 6, 2002, the following correction is made:

On page 5604, in the third column, add the following sentence at the end of the **ADDRESSES** section: ''Submit written comments on the document to the Dockets Management Branch (HFA–305), Food and Drug Administration, 5630 Fishers Lane, rm. 1061, Rockville, MD 20852.''

Dated: March 4, 2002.

Margaret M. Dotzel,

Associate Commissioner for Policy.

[FR Doc. 02–5666 Filed 3–8–02; 8:45 am]

BILLING CODE 4160–01–P

DEPARTMENT OF HEALTH AND HUMAN SERVICES

Health Resources and Services Administration

Agency Information Collection Activities; Proposed Collection; Comment Request

In compliance with the requirement for opportunity for public comment on proposed data collection projects (section 3506(c)(2)(A) of Title 44, United States Code, as amended by the Paperwork Reduction Act of 1995, Public Law 104–13), the Health Resources and Services Administration (HRSA) publishes periodic summaries of proposed projects being developed for submission to the Office of Management and Budget under the Paperwork Reduction Act of 1995. To request more information on the proposed project or to obtain a copy of the data collection plans and draft instruments, call the HRSA Reports Clearance Officer on (301) 443–1129.

Comments are invited on: (a) Whether the proposed collection of information is necessary for the proper performance of the functions of the Agency, including whether the information shall have practical utility; (b) the accuracy of the Agency's estimate of the burden of the proposed collection of information; (c) ways to enhance the quality, utility, and clarity of the information to be collected; and (d) ways to minimize the burden of the collection of information on respondents, including the use of automated collection techniques or other forms of information technology.

Proposed Project: Health Education Assistance Loan (HEAL) Program: Lender's Application for Insurance Claim Form and Request for Collection Assistance Form (OMB No. 0915–0036)—Extension

The HEAL program ensures the availability of funds for loans to eligible students who desire to borrow money to pay for their educational costs. The HEAL lenders use the Lenders Application for Insurance Claim to request payment from the Federal Government for federally insured loans lost due to borrowers death, disability, bankruptcy, or default. The Request for Collection Assistance form is used by HEAL lenders to request federal assistance with the collection of delinquent payments from HEAL borrowers.

The burden estimates are as follows:

Form	Number of respondents	Responses per respondent	Total responses	Hours per response (minutes)	Total burden hours
Lender's Application for Insurance Claim	20	75	1,500	30	750
Request for Collection Assistance	20	1,260	25,200	10	4,208
Total Burden	20				4,958

Send comments to Susan G. Queen, Ph.D., HRSA Reports Clearance Officer, Room 11–05, Parklawn Building, 5600 Fishers Lane, Rockville, MD 20857. Written comments should be received within 60 days of this notice.

Dated: March 4, 2002.

Jane M. Harrison,

Director, Division of Policy Review and Coordination.

[FR Doc. 02–5667 Filed 3–8–02; 8:45 am]

BILLING CODE 4165–15–P

DEPARTMENT OF HEALTH AND HUMAN SERVICES

Health Resources and Services Administration

Agency Information Collection Activities: Proposed Collection: Comment Request

In compliance with the requirement for opportunity for public comment on proposed data collection projects (section 3506(c)(2)(A) of title 44, United States Code, as amended by the Paperwork Reduction Act of 1995, Public Law 104–13), the Health Resources and Services Administration (HRSA) publishes periodic summaries of proposed projects being developed for submission to the Office of Management and Budget under the Paperwork Reduction Act of 1995. To request more information on the proposed project or to obtain a copy of the data collection plans and draft instruments, call the HRSA Reports Clearance Officer on (301) 443–1129.

Comments are invited on: (a) Whether the proposed collection of information is necessary for the proper performance of the functions of the Agency,

including whether the information shall have practical utility; (b) the accuracy of the Agency's estimate of the burden of the proposed collection of information; (c) ways to enhance the quality, utility, and clarity of the information to be collected; and (d) ways to minimize the burden of the collection of information on respondents, including the use of automated collection techniques or other forms of information technology.

Proposed Project: Health Professions Student Loan (HPSL) Program and Nursing Student Loan (NSL) Program Administrative Requirements (Regulations and Policy)(OMB No. 0915–0047)—Revision

The regulations for the Health Professions Student Loan (HPSL) Program and Nursing Student Loan (NSL) Program contain a number of reporting and recordkeeping requirements for schools and loan applicants. The requirements are essential for assuring that borrowers are aware of rights and responsibilities that schools know the history and status of each loan account that schools pursue aggressive collection efforts to reduce default rates and that they maintain adequate records for audit and assessment purposes. Schools are free to use improved information technology to manage the information required by the regulations.

The estimated total annual burden is 34,558 hours. The burden estimates are as follows:

RECORDKEEPING REQUIREMENTS

Regulatory/section requirements	Number of record-keepers	Hours per year	Total burden hours
HPSL Program:			
57.206(b)(2), Documentation of Cost of Attendance	275	1.17	322
57.208(a), Promissory Note	275	1.25	344
57.210((b)(1)(i), Documentation of Entrance Interview	275	1.25	344
57.210(b)(1)(ii), Documentation of Exit Interview	*302	0.33	100
57.215(a)&(d), Program Records	*302	10	3,020
57.215(b), Student Records	*302	10	3,020
57.215(c), Repayment Records	*302	18.75	5,663
HPSL Subtotal	302		12,813
NSL Program:			
57.306(b)(2)(ii), Documentation of Cost of Attendance	347	0.3	104
57.308(a), Promissory Note	347	0.5	174
57.310(b)(1)(i), Documentation of Entrance Interview	347	0.5	174
57.310(b)(1)(ii), Documentation of Exit Interview	*607	0.17	103
57.315(a)(1)&(a)(4), Program Records	*607	5	3,035
57.315(a)(2), Student Records	*607	1	607
57.315(a)(3), Repayment Records	*607	2.5	1,518
NSL Subtotal	607		5,715

*Includes active and closing schools.

REPORTING REQUIREMENTS

Regulatory/section requirements	Number of respondents	Responses per respondent	Total annual responses	Hours per response	Total hour burden
HPSL Program:					
57.205(a)(2), Excess Cash	Burden included under 0915–0044 and 0915–0045				
57.206(a)(2), Student Financial Aid Transcript	3,750	1	3,750	.25	938
57.208(c), Loan Information Disclosure	275	68.73	18,900	.0833	1,574
57.210(a)(3), Deferment Eligibility	Burden included under 0915–0044				
57.210(b)(1)(i), Entrance Interview	275	68.73	18,900	.0167	3,156
57.210(b)(1)(ii), Exit Interview	*302	12	3,624	0.5	1,812
57.210(b)(1)(iii), Notification of Repayment	*302	30.83	9,310	0.167	1,555
57.210(b)(1)(iv), Notification During Deferment	*302	24.32	7,344	0.0833	612
57.210(b)(1)(vi), Notification of Delinquent Accounts	*302	10.28	3,104	0.167	518
57.210(b)(1)(x), Credit Bureau Notification	*302	8.03	2,425	0.6	1,455
57.210(b)(4)(i), Write-off of Uncollectible Loans	20	1.00	20	0.5	10
57.211(a) Disability Cancellation	8	1	8	.75	6
57.215(a) Reports	Burden included under 0915–0044				
57.215(a)(2), Administrative Hearings	0	0	0	0	0
57.215(a)(d), Administrative Hearings	0	0	0	0	0
HPSL Subtotal	4,052		67,385		8,796
NSL Program:					

REPORTING REQUIREMENTS—Continued

Regulatory/section requirements	Number of respondents	Responses per respondent	Total annual responses	Hours per response	Total hour burden
57.305(a)(2), Excess Cash	Burden included under 0915–0044 and 0915–0046				
57.306(a)(2), Student Financial Aid Transcript	2,250	1	2,250	0.25	563
57.310(b)(1)(i), Entrance Interview	347	23.51	8,157	0.167	1,362
57.310(b)(1)(ii), Exit Interview	*607	3.77	2,288	0.5	1,144
57.301(b)(1)(iii), Notification of Repayment	*607	6.18	3,751	0.167	626
57.310(b)(1)(iv), Notification During Deferment	*607	0.65	395	0.083	33
57.310(b)(1)(vi), Notification of Delinquent Accounts	*607	4.61	2,798	0.167	467
57.310(b)(1)(x), Credit Bureau Notification	*607	8.3	5,038	0.6	3,023
57.310(b)(4)(i), Write-off of Uncollectible Loans	20	1.0	20	0.5	10
57.311(a), Disability Cancellation	7	1.0	7	0.8	5.6
57.312(a)(3), Evidence of Educational Loans	Inactive Provision				
57.315(a)(1), Reports	Burden included under 0915–044				
57.315(a)(1)(ii), Administrative Hearings	0	0	0	0	0
57.316(a)(d), Administrative Hearings	0	0	0	0	0
NSL Subtotal	2,857		24,704		7,234

*Includes active and closing schools.

Send comments to Susan G. Queen, Ph.D., HRSA Reports Clearance Officer, Room 11–05, Parklawn Building, 5600 Fishers Lane, Rockville, MD 20857. Written comments should be received within 60 days of this notice.

Dated: March 4, 2002.

Jane M. Harrison,

Director, Division of Policy Review and Coordination.

[FR Doc. 02–5668 Filed 3–8–02; 8:45 am]

BILLING CODE 4165–15–P

DEPARTMENT OF THE INTERIOR

Fish and Wildlife Service

Extension of Comment Period on the Draft Recovery Plan for Coastal Plants of the Northern San Francisco Peninsula

AGENCY: U.S. Fish and Wildlife Service, Interior.

ACTION: Extension of comment period.

SUMMARY: We, the U.S. Fish and Wildlife Service (Service), announce the extension of the comment period for the public review of the Draft Recovery Plan for Coastal Plants of the Northern San Francisco Peninsula for an additional 60 days from the date of publication of this notice in the **Federal Register**. The original comment period was to close on March 4, 2002. We are extending the comment period for an additional 60 days to allow additional time for public review of this draft recovery plan that includes the endangered San Francisco lessingia (*Lessingia germanorum*) and Raven's manzanita (*Arctostaphylos hookeri* ssp. *ravenii*). The portion of the plan dealing with Raven's manzanita is a revision of the 1984 Raven's Manzanita Recovery Plan. Additional species of concern that will benefit from recovery actions taken for these plants are also discussed in the draft recovery plan. The draft plan includes recovery criteria and measures for San Francisco lessingia and Raven's manzanita.

DATES: Comments on the draft recovery plan must be received on or before May 6, 2002.

ADDRESSES: Copies of the draft recovery plan are available for inspection, by appointment, during normal business hours at the following location: U.S. Fish and Wildlife Service, Sacramento Fish and Wildlife Office, 2800 Cottage Way, W–2605, Sacramento, California (telephone (916) 414–6600); and U.S. Fish and Wildlife Service, Regional Office, Ecological Services, 911 N.E. 11th Ave., Eastside Federal Complex, Portland Oregon 97232–4181 (telephone (503) 231–6131). Requests for copies of the draft recovery plan and written comments and materials regarding this plan should be addressed to Wayne S. White, Field Supervisor, Ecological Services, at the above Sacramento address.

FOR FURTHER INFORMATION CONTACT: Jan C. Knight, Chief, Endangered Species Division, Sacramento Fish and Wildlife Office, 2800 Cottage Way, Room W–2605, Sacramento, California 95825. Phone: (916) 414–6600.

SUPPLEMENTARY INFORMATION:

Background

Restoring endangered or threatened animals and plants to the point where they are again secure, self-sustaining members of their ecosystems is a primary goal of the Service's endangered species program. To help guide the recovery effort, the Service is working to prepare recovery plans for most of the listed species native to the United States. Recovery plans describe actions considered necessary for the conservation of the species, establish criteria for downlisting or delisting listed species, and estimate time and cost for implementing the recovery measures needed.

The Endangered Species Act of 1973, as amended (16 U.S.C. 1531 *et seq.*) (Act), requires the development of recovery plans for listed species unless such a plan would not promote the conservation of a particular species. Section 4(f) of the Act as amended in 1988 requires that public notice and an opportunity for public review and comment be provided during recovery plan development. The Service will consider information presented during the public comment period prior to

approval of each new or revised recovery plan. Substantive technical comments may result in changes to the plan. Substantive comments regarding recovery plan implementation may not necessarily result in changes to the recovery plan, but will be forwarded to appropriate Federal or other entities so that they can take these comments into account during the course of implementing recovery actions. Individual responses to comments will not be provided.

San Francisco lessingia and Raven's manzanita are restricted to the San Francisco peninsula in San Francisco County, California. San Francisco lessingia, an annual herb in the aster family, is restricted to coastal sand deposits. Raven's manzanita is a rare evergreen creeping shrub in the heath family which was historically restricted to few scattered serpentine outcrops. Habitat loss, adverse alteration of ecological processes, and invasion of non-native plant species threaten San Francisco lessingia. Raven's manzanita has also been threatened by habitat loss; primary current threats include invasion of non-native vegetation and fungal pathogens. The draft plan also makes reference to several other federally listed species which are ecologically associated with San Francisco lessingia and Raven's manzanita, but which are treated comprehensively in other recovery plans. These species are beach layia (*Layia carnosa*), Presidio clarkia (*Clarkia franciscana*), Marin dwarf-flax (*Hesperolinon congestum*), Myrtle's silverspot butterfly (*Speyere zerene myrtleae*), and bay checkerspot butterfly (*Euphydryas editha bayensis*). In addition, 16 plant species of concern and 17 plant species of local or regional conservation significance are considered in this recovery plan.

The draft recovery plan stresses re-establishing dynamic, persistent populations of San Francisco lessingia and Raven's manzanita within plant communities which have been restored to be as ''self-sustaining'' as possible within urban wildland reserves. Specific recovery actions for San Francisco lessingia focus on the restoration and management of large, dynamic mosaics of coastal dune areas supporting shifting populations within the species' narrow historic range. Recovery of Raven's manzanita may include, but may not be limited to, the strategy of the 1984 Raven's Manzanita Recovery Plan, which emphasized the stabilization of the single remaining genetic individual. The draft plan also recommends re-establishing multiple sexually reproducing populations of Raven's manzanita in association with its historically associated species of local serpentine outcrops. The objectives of this recovery plan are to delist San Francisco lessingia and to downlist Raven's manzanita through implementation of a variety of recovery measures including (1) Protection and restoration of a series of ecological reserves (often with mixed recreational and conservation park land uses); (2) promotion of population increases of San Francisco lessingia and Raven's manzanita within these sites, or reintroducion of them to restored sites; (3) management of protected sites, especially the extensive eradication or suppression of invasive dominant non-native vegetation; (4) research; and (5) public participation, outreach and education.

Public Comments Solicited

The Service solicits written comments on the recovery plan described. All comments received by the date specified above will be considered prior to approval of this plan.

Authority: The authority for this action is section 4(f) of the Endangered Species Act, 16 U.S.C. 1533(f).

Dated: March 4, 2002.

Duane K. McDermond,

Deputy Manager, California/Nevada Operations Office, Sacramento, California.

[FR Doc. 02–5689 Filed 3–8–02; 8:45 am]

BILLING CODE 4310–55–P

DEPARTMENT OF THE INTERIOR

Fish and Wildlife Service

Notice of Meeting of the Klamath River Basin Fisheries Task Force

AGENCY: Fish and Wildlife Service, Interior.

ACTION: Notice of meeting.

SUMMARY: Pursuant to section 10(a)(2) of the Federal Advisory Committee Act (5 U.S.C. App. I), this notice announces a meeting of the Klamath River Basin Fisheries Task Force, established under the authority of the Klamath River Basin Fishery Resources Restoration Act (16 U.S.C. 460ss *et seq.*). The meeting is open to the public. The purpose of the meeting is to continue providing recommendations from the affected interests to the Department of the Interior on implementation of their program to restore anadromous fisheries, including salmon and steelhead, of the Klamath River in California and Oregon.

DATES: The Klamath River Basin Fisheries Task Force (Task Force) will meet from 9 a.m. to 5 p.m. on June 19, 2002, and from 8 a.m. to 5 p.m. on June 20, 2002.

ADDRESSES: The meeting will be held at the Yurok Tribal office, Highway 96, Weitchpec, CA.

FOR FURTHER INFORMATION CONTACT: Phil Detrich, Project Leader, U.S. Fish and Wildlife Service, 1829 South Oregon Street, Yreka, California 96097, telephone (530) 842–5763.

SUPPLEMENTARY INFORMATION: For background information on the Task Force, please refer to the notice of their initial meeting that appeared in the **Federal Register** on July 8, 1987 (52 FR 25639).

Dated: March 4, 2002.

John Engbring,

Acting Manager, California/Nevada Operations Office, Sacramento, California.

[FR Doc. 02–5687 Filed 3–8–02; 8:45 am]

BILLING CODE 4310–55–P

DEPARTMENT OF THE INTERIOR

Fish and Wildlife Service

Notice of Meeting of the Klamath River Basin Fisheries Task Force

AGENCY: Fish and Wildlife Service, Interior.

ACTION: Notice of meeting.

SUMMARY: Pursuant to section 10(a)(2) of the Federal Advisory Committee Act (5 U.S.C. App. I), this notice announces a meeting of the Klamath River Basin Fisheries Task Force, established under the authority of the Klamath River Basin Fishery Resources Restoration Act (16 U.S.C. 460ss *et seq.*). The meeting is open to the public. The purpose of the meeting is to continue providing recommendations from the affected interests to the Department of the Interior on implementation of their program to restore anadromous fisheries, including salmon and steelhead, of the Klamath River in California and Oregon.

DATES: The Klamath River Basin Fisheries Task Force (Task Force) will meet from 9 a.m. to 5 p.m. on October 16, 2002, and from 8 a.m. to 5 p.m. on October 17, 2002.

ADDRESSES: The meeting will be held at the Shilo Inn, 2500 Almond Street, Klamath Falls, OR.

FOR FURTHER INFORMATION CONTACT: Phil Detrich, Project Leader, U.S. Fish and Wildlife Service, 1829 South Oregon Street, Yreka, California 96097, telephone (530) 842–5763.

SUPPLEMENTARY INFORMATION: For background information on the Task Force, please refer to the notice of their

initial meeting that appeared in the **Federal Register** on July 8, 1987 (52 FR 25639).

Dated: March 4, 2002.

John Engbring,

Acting Manager, California/Nevada Operations, Sacramento, California.

[FR Doc. 02–5688 Filed 3–8–02; 8:45 am]

BILLING CODE 4310–55–P

DEPARTMENT OF THE INTERIOR

Bureau of Indian Affairs

Determination of Trust Land Acquisition

AGENCY: Bureau of Indian Affairs, Interior.

ACTION: Notice.

SUMMARY: The Bureau of Indian Affairs (BIA) is publishing this notice to provide notification of the determination that public Law 98–602 land settlement claim funds were used to purchase trust land in Kansas City, Kansas for the Wyandotte Tribe of Oklahoma (Tribe).

FOR FURTHER INFORMATION CONTACT: George T. Skibine, Director, Office of Indian Gaming Management, Bureau of Indian Affairs 1849 C Street NW, MS–2070 MIB, Washington, DC 20240; by telephone at (202) 219–4066 (this is not a toll-free number); or by telefax at (202) 273–3153.

SUPPLEMENTARY INFORMATION: This notice is published in exercise of authority delegated to the Assistant Secretary—Indian Affairs by 209 DM 8 and in accordance with 5 U.S.C. 2, 9, 2710.

Background

The statutory authority for the Wynadotte Tribe's acquisition of the Kansas City tract (Shriner's Building) is Public Law 98–602, 98 Stat. 3149, enacted on October 30, 1984. It expressly provides that ''$100,000 of such funds shall be used for the purchase of real property which shall be held in trust by the Secretary for the Tribe.'' Public Law 98–602 § 105(b)(1). When section 602 funds were received by Wyandotte Tribe of Oklahoma, the Tribe purchased $100,000 of mortgage obligation bonds on May 14, 1986. Interest and bond dividend earnings were retained in an existing cash account. As bonds were redeemed and additional bonds purchased, the funds flowed through the cash account, which contained other tribal monies.

Beginning in 1989 the Tribe held an investment account which paid some dividends and interests directly to the Tribe's main accounts. In December 1991, the Tribe eliminated one account and combined the section 602 funds (principal, cash, dividends, and interest) into its main investment account.

At the time of the July 12, 1996 disbursement of $180,000 for the Shriner's Building purchase, the remaining accumulated amount of section 602 funds and the dividends and interest of those funds, was $212,169.65.

An analysis of the accumulation of interest and dividends on section 602 funds was completed by KPMG, L.L.P., a public accounting firm. The analysis procedures included tracing balances from bank account statements, testing the appropriateness of the allocation of interest and dividends to section 602 funds and other funds deposited in the main account, tracing the use of the section 602 funds to purchases and sell securities, and the mathematical accuracy of the analysis. KMPG ''found that the computations were appropriate and that the ending value that resulted from the initial $100,000 investment was $121,170 at the time of the land purchase.'' The analysis and findings were presented to the Tribe in a November 26, 2001 letter from KPMG.

Determination

The Secretary of the Interior has determined that the funds used to purchase the Shriner's Property in Kansas City, Kansas were from the section 602 settlement of specific land claims. The Secretary affirms that trust status of the subject lands.

Dated: February 22, 2002.

Neal A. McCaleb,

Assistant Secretary—Indian Affairs.

[FR Doc. 02–5760 Filed 3–8–02; 8:45 am]

BILLING CODE 4310–4N–M

DEPARTMENT OF THE INTERIOR

National Park Service

National Register of Historic Places; Notice on NHL Boundaries

The National Park Service has been working to establish boundaries for all National Historic Landmarks for which no specified boundary was identified at the time of designation and therefore are without a clear delineation of the property involved.

In accordance with the National Historic Landmark program regulations 36 CFR 65, the National Park Service notifies owners, public officials and other interested parties and gives them an opportunity to comment on the proposed boundary documentation.

The 60-day comment period on the National Historic Landmark listed below has ended and the boundary documentation has been approved. Copies of the documentation of the landmark and its boundaries, including maps, may be obtained from the National Register of Historic Places, National Park Service, 1849 C Street, Northwest, Suite NC 400, Washington, D.C. 20240, Attention: Sarah Pope (phone: 202–343–9536; e-mail: *sarah_pope@nps.gov*).

Grant-Kohrs National Historic Landmark

Deer Lodge, Powell County, Montana

Designated a Landmark on December 19, 1960

Carol D. Shull,

Chief of the National Historic Landmarks Survey and Keeper of the National Register; National Register, History and Education.

[FR Doc. 02–5705 Filed 3–8–02; 8:45 am]

BILLING CODE 4310–70–P

DEPARTMENT OF THE INTERIOR

National Park Service

National Register of Historic Places; Notification of Pending Nominations

Nominations for the following properties being considered for listing in the National Register were received by the National Park Service before February 16, 2002. Pursuant to § 60.13 of 36 CFR part 60 written comments concerning the significance of these properties under the National Register criteria for evaluation may be forwarded by United States Postal Service, to the National Register of Historic Places, National Park Service, 1849 C St. NW., NC400, Washington, DC 20240; by all other carriers, National Register of Historic Places, National Park Service, 800 N. Capitol St.NW, Suite 400, Washington DC 20002; or by fax, 202–343–1836 . Written or faxed comments should be submitted by March 26, 2002.

Carol D. Shull,

Keeper of the National Register of Historic Places.

ARKANSAS

Garland County

Orange Street Presbyterian Church, 428 Orange St., Hot Springs, 02000259

Greene County

Highfill—McClure House, 701 W. Highland St., Paragould, 02000260

Pope County

Pottsville Citizen's Bank, 156 E. Ash St., Pottsville, 02000261

COLORADO

Denver County

Dickinson Branch Library, 1545 Hooker St., Denver, 02000262

Phillips County

Shirley Hotel, 101 S. Colorado Ave., Haxtun, 02000263

FLORIDA

Hillsborough County

North Franklin Street Historic District, Roughly bounded by Florida Ave., E. Fortune, Tampa, Franklin and E. Harrison Sts., Tampa, 02000264

Palm Beach County

Evans, J.B., House, 142 S. Ocean Bvd., Delray Beach, 02000265

Polk County

Interlaken Historic Residential District (Winter Haven, Florida MPS), Roughly bounded by N. Shore Lake Howard, SW. Shore Lake Mirror and Cannon-Howard Canal, Winter Haven, 02000266

LOUISIANA

Bossier Parish

Bossier City Municipal Building, 630 Barksdale Rd., Bossier City, 02000267

East Baton Rouge Parish

Dufrocq School, 330 S. 19th St., Baton Rouge, 02000268

East Feliciana Parish

Clear Creek AME Church, Approx. ½ mi. S. of Jct. LA 961 and LA 432, Felixville, 02000269

MARYLAND

Washington County

Maryland Heights, Spur Battery (Harpers Ferry National Historical Park MPS), Hoffmaster Rd., Sandy Hook, 02000286

MISSOURI

St. Louis Independent City

Moloney Electric Company Building, 1141–1151 S. 7th St., Saint Louis, 02000270

NEBRASKA

Clay County

Inland School (School Buildings in Nebraska MPS), Jct. NWC East Ave. and Edison St., Inland, 02000271

Douglas County

Ackerhurst—Eipperhurst Dairy Barn, 15220 Military Rd., Bennington, 02000272

Wayne County

Wayne Municipal Auditorium, 222 N. Pearl St., Wayne, 02000273

NEW JERSEY

Monmouth County

Camp Evans Historic District, 2201 Marconi Rd. (Wall Township), New Bedford, 02000274

NORTH CAROLINA

Stanly County

Downtown Albemarle Historic District, Portions of S. 2nd, W. Main and N. and S. 1st Sts., Albemarle, 02000275

TEXAS

Harris County

Sam Houston Hotel, 1119 Prairie St., Houston, 02000276

VERMONT

Caledonia County

Ricker Pond State Park (Historic Park Landscapes in National and State Parks MPS), 526 State Forest Rd., Groton, 02000277

Stillwater State Park (Historic Park Landscapes in National and State Parks MPS), 126 Boulder Beach Rd., Groton, 02000278

Lamoille County

Elmore State Park (Historic Park Landscapes in National and State Parks MPS), 856 VT 12, Elmore, 02000279

Orange County

Allis State Park (Historic Park Landscapes in National and State Parks MPS), RR 2, Box 192, Brookfield, 02000280

Windsor County

Coolidge State Park (Historic Park Landscapes in National and State Parks MPS), 855 Coolidge State Park Rd., Plymouth, 02000281

Wilgus State Park,

(Historic Park Landscapes in National and State Parks MPS), 3985 US Route 5, Weatherfield, 02000282

WEST VIRGINIA

Jefferson County

Bollman—Wernwag—Latrobe Bridge (Harpers Ferry National Historical Park MPS), Confluence Potomac and Shenandoah Rs., Harpers Ferry, 02000287

WISCONSIN

Fond Du Lac County

Cole, William I, House, 303 Gillett St., Fond du Lac, 02000283

Kewaunee County

Major Wilbur Fr. Browder (tugboat), Harbor Park, Kilbourn St., Kewaunee, 02000284

Outagamie County

Barteau Bridge, N. of WI 187 crossing of Shioc R., Bovina, 02000285

A request for REMOVAL has been made for the following resource:

NEBRASKA

Douglas County

Jobbers' Canyon Historic District, Roughly bounded by Farnum, Eighth, Jackson, and Tenth Sts. Omaha, 86003408

A request for a MOVE has been made for the following resource:

NEBRASKA

Otoe County

Little Nemaha River Bridge (Highway Bridges in Nebraska MPS), Co. Rd. over the Little Nemaha R., 3 mi. NW of Syracuse, Syracuse, 92000723

[FR Doc. 02–5704 Filed 3–8–02; 8:45 am]

BILLING CODE 4310–70–P

DEPARTMENT OF THE INTERIOR

National Park Service

National Register of Historic Places; Notification of Pending Nominations

Nominations for the following properties being considered for listing in the National Register were received by the National Park Service before February 23, 2002.

Pursuant to § 60.13 of 36 CFR Part 60 written comments concerning the significance of these properties under the National Register criteria for evaluation may be forwarded by United States Postal Service, to the National Register of Historic Places, National Park Service, 1849 C St. NW, NC400, Washington, DC 20240; by all other carriers, National Register of Historic Places, National Park Service, 800 N. Capitol St. NW, Suite 400, Washington DC 20002; or by fax, 202–343–1836 . Written or faxed comments should be submitted by March 26, 2002.

Paul R. Lusignan,

Acting Keeper of the National Register of Historic Places.

COLORADO

Denver County

Photography and Armament School Buildings, Lowry Air Force Base, 125 and 130 Rampart Way and 7600 East First Place, Denver, 02000288

Morgan County

Morgan County Courthouse and Jail, 225 Ensign and 218 West Kiowa, Fort Morgan, 02000289

Pitkin County

Ute Cemetery, Ute Ave., Aspen, 02000291

Weld County

Nettleton—Mead House, 1303 9th Ave., Greeley, 02000290

GEORGIA

Cherokee County

Canton Cotton Mills No. 2, 200 Ball Ground Hwy., Canton, 02000293

Thomas County

Paradise Park Historic District (Boundary Increase), 502 S. Broad St., Thomasville, 02000292

IOWA

Polk County

Evans, Edward B. and Nettie E., House, 1410 19th St., Des Moines, 02000294

LOUISIANA

Pointe Coupee Parish

Valverda Plantation House, 2217 LA 977, Maringouin, 02000297

Tensas Parish

Waterproof High School, Main St., bet. Church Ln. and Mississippi St., Waterproof, 02000296

MICHIGAN

Cass County

First Methodist Episcopal Church of Pokagon, 60041 Vermont St., Pokagon Township, 02000295

NEVADA

Lander County

Toquima Cave, Humboldt—Toiyabe National Forest, Austin, 02000298

NEW YORK

Chenango County

Upperville Meeting House, NY 80, Upperville, 02000307

Delaware County

Van Benschoten House and Guest House, Margaretville Mountain Rd., Margaretville, 02000302

Dutchess County

Beth David Synagogue, E. Main St., Amenia, 02000308 Indian Rock Schoolhouse, Mygatt Rd., Amenia, 02000306

Genesee County

Batavia Cemetery, Harvester Ave., Batavia, 02000309

Monroe County

First Presbyterian Church of Mumford, George and William Sts., Mumford, 02000299

Montgomery County

Enlarged Double Lock No. 33 Old Erie Canal, Towpath Rd., St. Johnsville, 02000315

Queens County

Long Island Motor Parkway, Roughly Alley Pond and Cunningham Parks, bet. Winchester Blvd. and Clearview Expressway, bet. 73rd Ave. and Peck Ave., Queens, 02000301

Saratoga County

Barker General Store, 1 Military Rd., Beecher Hollow, 02000303

St. Lawrence County

First Presbyterian Church of Dailey Ridge, 411 Elliot Rd., Potsdam, 02000300

Tioga County

Evergreen Cemetery, East Ave., bet. Erie St. and Prospect St., Owego, 02000305
First Methodist Episcopal Church of Tioga Center, NY 17C, Tioga, 02000304

VIRGINIA

Fluvanna County

Laughton, VA 623, Kents Store, 02000318
Western View, VA 658, Fork Union, 02000320

Hanover County

Spring Green, 2160 Old Church Rd., Mechanicsville, 02000316

Northampton County

Almshouse Farm at Machipongo, 12402 Lankford Hwy., Machipongo, 02000317
Brown's, James, Dry Goods Store, 16464 Courthouse Rd., Eastville, 02000321

Southampton County

Aspen Lawn, 4438 Hiscksford Rd., Drewryville, 02000319

Washington County

Pitts, Dr. William H., House, 247 E. Main St., Abingdon, 02000322

WASHINGTON

Cowlitz County

Modrow Bridge (Bridges and Tunnels Built in Washington State, 1951–1960 MPS) Modrow Rd. over Kalama R., Kalama, 02000310

King County

Foss River Bridge (Bridges and Tunnels Built in Washington State, 1951–1960 MPS) Jack Bird Rd. No. 89440 over Foss R., Skykomish, 02000312
Mt. Si Bridge (Bridges and Tunnels Built in Washington State, 1951–1960 MPS) Mount Si Rd. over Middle Fork of the Snoqualmia R., North Bend, 02000324
Stossel Bridge (Bridges and Tunnels Built in Washington State, 1951–1960 MPS), NE Carnation Farm Rd. over Snoqualmie R., Carnation, 02000325

Klickitat County

B–Z Corner Bridge (Bridges and Tunnels Built in Washington State, 1951–1960 MPS), B–Z Corner—Glenwood Rd. over White Salmon River, B–Z Corner, 02000314

Skagit County

Dalles Bridge (Bridges and Tunnels Built in Washington State, 1951–1960 MPS), Concrete Sauk Valley Rd. across the Skagit R., Concrete, 02000323
Rainbow Bridge, Pioneer Parkway over the Swinomish Channel, La Conner, 02000313

Skamania County

Conrad Lundy Jr. Bridge (Bridges and Tunnels Built in Washington State, 1951–1960 MPS), Wind River Rd. over Wind River Canyon, Carson, 02000326

Snohomish County

Red Bridge (Bridges and Tunnels Built in Washington State, 1951–1960 MPS), Mountain Loop Hwy. over Stillaguamish R., Silverton, 02000311

WISCONSIN

Fond Du Lac County

Ebert, Rudolph and Louise, House, 199 E. Division St., Fond du Lac, 02000327

[FR Doc. 02–5706 Filed 3–8–02; 8:45 am]

BILLING CODE 4310–70–P

DEPARTMENT OF THE INTERIOR

Bureau of Reclamation Fish and Wildlife Service

Imperial Irrigation District Water Conservation and Transfer Project, Draft Habitat Conservation Plan, California [INT–DES–01–44], Notice of Public Hearings

AGENCIES: Bureau of Reclamation and Fish and Wildlife Service, Interior.

ACTION: Notice of public hearings.

SUMMARY: Pursuant to the National Environmental Policy Act of 1969, as amended (NEPA), and the Council on Environmental Quality's Regulations for Implementing the Procedural Provisions of NEPA, on January 18, 2002, the Bureau of Reclamation (Reclamation) filed a draft environmental impact report/environmental impact statement (EIR/EIS) on Imperial Irrigation District's (IID) proposed Water Conservation and Transfer Project, Draft Habitat Conservation Plan (HCP). The Fish and Wildlife Service (Service) is a cooperating agency in the preparation of this EIR/EIS (pursuant to 40 CFR 1501.6).

Under the proposed project, IID would conserve and transfer the right to use up to 300,000 acre-feet per year of Colorado River water, which IID is otherwise entitled to divert for use within IID's water service area in Imperial County, California. The conserved water would be transferred to San Diego County Water Authority, Coachella Valley Water District and/or The Metropolitan Water District. These transfers, which are to remain in effect for up to 75 years, would facilitate efforts to reduce California's diversion of Colorado River water in normal years to its annual 4.4 million acre-feet apportionment. The Secretary of the Interior is expected to approve the change in the point of delivery for the transferred water by executing an Implementation Agreement, the environmental impacts of which are disclosed in the ''Implementation Agreement, Inadvertent Overrun and Payback Policy, and Related Federal Actions Draft EIS'' (INT–DES–01–43) and the ''Biological Assessment for Proposed Interim Surplus Criteria, Secretarial Implementation Agreements

for California Water Plan Components and Conservation Measures on the Lower Colorado River (Lake Mead to the Southerly International Boundary)'' dated August 30, 2000. In addition, IID is applying for a permit with the Service pursuant to section 10(a)(1)(B) of the Endangered Species Act (ESA). This Section 10 permit would authorize the incidental take of covered species associated with the proposed water conservation and transfer project, as well as IID's ongoing operation and maintenance activities. As a condition of applying for a Section 10 permit, IID has developed a HCP in consultation with the Service and the California Department of Fish and Game, which is appended to the draft EIR/EIS. The HCP provides measures to minimize and mitigate the effects of the proposed taking of listed and sensitive species and the habitats upon which they depend. Issuance of a permit pursuant to Section 10(a)(1)(B) is a Federal action requiring evaluation under NEPA, and implementation of the HCP is addressed in the draft EIR/EIS. Additional information regarding the HCP is provided in **SUPPLEMENTARY INFORMATION**, below. The analysis in the draft EIR/EIS is intended to inform the public of the proposed action and alternatives; address public comments received during the scoping period; disclose the direct, indirect, and cumulative environmental effects of the proposed action and each of the alternatives; and indicate any irreversible commitment of resources that would result from implementation of the proposed action.

Public hearings have been scheduled to receive written or verbal comments on the draft EIR/EIS from interested organizations and individuals on the environmental impacts of the proposed project and implementation of the HCP.

DATES: Public hearings are scheduled to be held to receive written or oral comments about the draft EIR/EIS from interested organizations and individuals, on the adequacy with which the draft EIR/EIS identifies and describes the potential impacts associated with approving and implementing the proposed Federal actions. The hearings will be held on:

- April 2, 2002, 5 p.m., in La Quinta*, California.
- April 3, 2002, 5 p.m., in El Centro*, California.
- April 4, 2002, 5 p.m., in San Diego, California.

(*) A Spanish interpreter will be present.

Written comments will continue to be accepted until April 26, 2002, the end of the public review and comment period (see **ADDRESSES**, below). (The end of the public review and comment period identified in the original notice of availability (67 FR 3732, Jan. 25, 2002) was in error.)

Oral comments made at the public hearings may address the water conservation and transfer project and/or the HCP; they will be limited to 5 minutes. Time permitting, the meeting facilitator will allow any speaker to provide additional oral comments after all persons wishing to comment have been heard. A court reporter will prepare a written record of all comments made; however, commentors are encouraged to provide a written copy of their statement. If you would like to sign up in advance to provide oral comments, please contact Ms. Janice Kjesbo at (602) 216–3864, faxogram (602) 216–4006, by March 29, 2002. Hearing impaired, visually impaired, and/or mobility impaired persons planning to attend the meeting(s) may arrange for necessary accommodations by contacting Ms. Kjesbo no later than March 15, 2002.

ADDRESSES: The hearings will be held at the following locations:

- La Quinta*—IID Board Room, 81–600 Ave. 58, La Quinta, California 92253.
- El Centro*—IID Auditorium, 1284 Broadway, El Centro, California 92243.
- San Diego—San Diego County Water Authority Board Room, 4677 Overland Ave., San Diego, California 92123.

(*) A Spanish interpreter will be present.

Written comments regarding the adequacy of the document will continue to be accepted until April 26, 2002, to Mr. Bruce Ellis, Chief, Environmental Resources Management Division, Bureau of Reclamation, Phoenix Area Office (PXAO–1500), PO Box 81169, Phoenix, AZ 85069–1169, fax number (602) 216–4006; or Mr. Elston Grubaugh, Manager, Resource Planning and Management Department, Imperial Irrigation District, PO Box 937, Imperial, CA 92251, fax number (760) 339–9009.

FOR FURTHER INFORMATION CONTACT: Questions regarding the draft EIR/EIS should be directed to Mr. Ellis at the Phoenix Area Office address provided above, or telephone (602) 216–3854. For information related to the HCP, please contact Ms. Carol Roberts at the Carlsbad Fish and Wildlife Service office, telephone (760) 431–9440.

SUPPLEMENTARY INFORMATION: Section 9 of the ESA and Federal regulation prohibit the ''take'' of fish and wildlife species listed as endangered or threatened. Take of listed fish or wildlife is defined under the ESA to include kill, harm, or harass. Harm includes significant habitat modification or degradation that actually kills or injures listed wildlife by significantly impairing essential behavioral patterns, including breeding, feeding, and sheltering (50 CFR 17.3(c)). Under limited circumstances, the Service may issue permits to authorize incidental take; *i.e.,* take that is incidental to, and not the purpose of, otherwise lawful activity. Regulations governing incidental take permits for threatened and endangered species are found in 50 CFR 17.32 and 17.22, respectively. Pursuant to section 10(a)(1)(B) of the ESA, IID has developed an HCP. The IID HCP is intended to address the impacts of the incidental take potentially resulting from the water conservation and transfer project, and ongoing operations and maintenance activities. A total of 96 species are proposed for coverage, including 10 federally-listed and two proposed species. A series of strategies have been developed to address impacts in the drain, desert, tamarisk scrub, agricultural, and Salton Sea habitats. Specific strategies have been developed for the Burrowing Owl, desert pupfish, and razorback sucker. The strategies include the creation of freshwater marsh and native tree habitat, worker education programs, timing restrictions on some covered activities, and research efforts to identify more specifically the needs of some covered species in order to avoid, minimize, and mitigate the impacts of the incidental take. The draft EIR/EIS evaluates the impacts of implementing the HCP.

It is anticipated that IID will be submitting its Incidental Take Permit Application in the near future. Upon receipt of the application package, the Service will publish a separate notice in the **Federal Register** announcing the receipt of the application and the draft Implementing Agreement, and their availability for public review.

Comments received on the draft EIR/EIS become part of the public record associated with this action. Accordingly, Reclamation makes these comments, including names and home addresses of respondents, available for public review. Individual respondents may request that we withhold their home address from public disclosure, which we will honor to the extent allowable by law. There also may be circumstances in which we would withhold a respondent's identity from public disclosure, as allowable by law. If you wish us to withhold your name and/or address, you must state this

prominently at the beginning of your comment. However, we will not consider anonymous comments. We will make all submissions from organizations or businesses, and from individuals identifying themselves as representatives or officials of organizations or businesses, available for public disclosure in their entirety.

Dated: February 26, 2002.

Willie Taylor,

Director, Office of Environmental Policy and Compliance.

[FR Doc. 02–5776 Filed 3–8–02; 8:45 am]

BILLING CODE 4310–MN–P

DEPARTMENT OF THE INTERIOR

Office of Surface Mining Reclamation and Enforcement

Notice of Proposed Information Collection

AGENCY: Office of Surface Mining Reclamation and Enforcement.

ACTION: Notice and request for comments.

SUMMARY: In compliance with the Paperwork Reduction Act of 1995, the Office of Surface Mining Reclamation and Enforcement (OSM) is announcing that the information collection requests for the titles described below have been forwarded to the Office of Management and Budget (OMB) for review and comment. The information collection requests describe the nature of the information collections and the expected burden and cost for 30 CFR parts 750 and 877.

DATES: OMB has up to 60 days to approve or disapprove the information collections but may respond after 30 days. Therefore, public comments should be submitted to OMB by April 10, 2002, in order to be assured of consideration.

FOR FURTHER INFORMATION CONTACT: To request a copy of either information collection request, explanatory information and related form, contact John A. Trelease at (202) 208–2783, or electronically to *jtreleas@osmre.gov.*

SUPPLEMENTARY INFORMATION: OMB regulations at 5 CFR 1320, which implement provisions of the Paperwork Reduction Act of 1995 (Pub. L. 104–13), require that interested members of the public and affected agencies have an opportunity to comment on information collection and recordkeeping activities [see 5 CFR 1320.8(d)]. OSM has submitted two requests to OMB to renew its approval of the collections of information contained in: 30 CFR part 750, Requirements for surface coal mining and reclamation operations on Indian Lands; and 30 CFR part 877, Rights of entry. OSM is requesting a 3-year term of approval for each information collection activity.

An agency may not conduct or sponsor, and a person is not required to respond to, a collection of information unless it displays a currently valid OMB control number. The OMB control numbers for these collections of information are 1029–0091 for part 750, and 1029–0055 for part 877.

As required under 5 CFR 1320.8(d), a **Federal Register** notice soliciting comments for these collections of information was published on December 21, 2001 (66 FR 246). No comments were received. This notice provides the public with an additional 30 days in which to comment on the following information collection activities:

Title: Requirements for surface coal mining and reclamation operations on Indian Lands—30 CFR part 750.

OMB Control Number: 1029–0091.

Summary: Operators who conduct or propose to conduct surface coal mining and reclamation operations on Indian lands must comply with the requirements of 30 CFR 750 pursuant to Section 710 of SMCRA.

Bureau Form Number: None.

Frequency of Collection: Once.

Description of Respondents: Applicants for coal mining permits.

Total Annual Responses: 75.

Total Annual Burden Hours: 1,400.

Title: Rights of Entry—30 CFR part 877.

OMB Control Number: 1029–0055.

Summary: This regulation establishes procedures for non-consensual entry upon private lands for the purpose of abandoned mine land reclamation activities or exploratory studies when the landowner refuses consent or is not available.

Bureau Form Number: None.

Frequency of Collection: Once.

Description of Respondents: State abandoned mine land reclamation agencies.

Total Annual Responses: 20.

Total Annual Burden Hours: 20.

Send comments on the need for the collections of information for the performance of the functions of the agency; the accuracy of the agency's burden estimates; ways to enhance the quality, utility and clarity of the information collections; and ways to minimize the information collection burdens on respondents, such as use of automated means of collections of the information, to the following addresses. Please refer to the appropriate OMB control numbers in all correspondence.

ADDRESSES: Office of Information and Regulatory Affairs, Office of Management and Budget, Attention: Department of Interior Desk Officer, 725 17th Street, NW., Washington, DC 20503. Also, please send a copy of your comments to John A. Trelease, Office of Surface Mining Reclamation and Enforcement, 1951 Constitution Ave, NW., Room 210—SIB, Washington, DC 20240, or electronically to *jtreleas@osmre.gov.*

Dated: February 19, 2002.

Richard G. Bryson,

Chief, Division of Regulatory Support.

[FR Doc. 02–5669 Filed 3–8–02; 8:45 am]

BILLING CODE 4310–05–M

DEPARTMENT OF JUSTICE

Notice of Lodging of Consent Decree Under the Comprehensive Environmental Response, Compensation, and Liability Act

Notice is hereby given that on February 14, 2002, a proposed consent decree in *United States* v. *Kenneth H. Hunter, Jr., et al.,* Civil No. 97–9449 CAS (RZx), was lodged with the United States District Court for the Central District of California.

This consent decree represents a settlement of claims brought against Kenneth H. Hunter, Jr., Hunter Resources, and Casmalia Resources (''defendants'') relating to the Casmalia Resources Hazardous Waste Disposal Site (''Site'') located near Casmalia, California. The United States alleged in its complaint that the defendants owned and/or operated the Site and seeks the recovery of response costs incurred and to be incurred related to the Site pursuant to the Comprehensive Environmental Response, Compensation, and Liability Act, 42 U.S.C. 9601 *et seq.*

The consent decree requires the defendants to pay $6.957 million and imposes limitations on property owned by Casmalia Resources. The defendants also waive any claim that they may have to the Casmalia Closure/Post-Closure Trust Fund, which is currently valued in excess of $13 million. The consent decree also provides protection to certain peripheral parties.

The Department of Justice will receive, for a period of sixty (60) days from the date of this publication, comments relating to the consent decree. Comments should be addressed to the Assistant Attorney General, Environment and Natural Resources Division, P.O. Box 7611, U.S. Department of Justice, Washington, DC

20044–7611, and should refer to *United States* v. *Kenneth H. Hunter, Jr., et al.,* DOJ Ref. 90–7–1–611D. A copy of all comments should also be sent to Bradley R. O'Brien, U.S. Department of Justice, Environment and Natural Resources Division, Environmental Enforcement Section, 301 Howard Street, Suite 1050, San Francisco, CA 94105. A public hearing will also be scheduled on this proposed settlement.

The consent decree may be examined at U.S. EPA Region 9, 75 Hawthorne Street, San Francisco, California. A copy of the consent decree may also be obtained by mail from the Consent Decree Library, P.O. Box 7611, U.S. Department of Justice, Washington, DC 20044–7611. In requesting a copy, please refer to *United States* v. *Kenneth H. Hunter, Jr., et al.* Civil No. 97–9449 CAS (RZx), DOJ Ref. 90–7–1–611D, and enclose a check in the amount of $72.25 (25 cents per page reproduction cost) payable to the Consent Decree Library.

Ellen M. Mahan,

Assistant Chief, Environmental Enforcement Section, Environment and Natural Resources Division.

[FR Doc. 02–5671 Filed 3–8–02; 8:45 am]

BILLING CODE 4410–15–M

DEPARTMENT OF JUSTICE

Notice of Lodging of Consent Decree Under Safe Drinking Water Act

In accordance with Departmental Policy, 28 CFR 50.7, notice is hereby given that on February 22, 2002, a proposed consent decree in *United States* v. *Arturo C. Muro and Manuela B. Muro,* Case No. 00cv1484–B(POR) was lodged with the United States District Court for the Southern District of California.

This consent decree represents a settlement of claims brought against Arturo C. Muro and Manuela B. Muro, in a civil complaint that was filed on July 25, 2000, for violations of the Safe Drinking Water Act, 42 U.S.C. 300f to 300j–26 (the ''SDWA''), at a trailer park that is owned and operated by the Muros in the County of San Diego, California. The complaint alleged that the Muros failed to comply with a Finding Of Imminent And Substantial Endangerment To The Health Of Persons And Administrative Order (Docket No. PWS–EO–99–004) (the ''Emergency Administrative Order'') that the United States Environmental Protection Agency (''EPA'') had issued on May 21, 1999, pursuant to the SDWA, 42 U.S.C. 300i(a). EPA had issued the Emergency Administrative Order because contaminants, including total coliform bacteria and *E. coli* bacteria (*i.e.,* fecal coliform), present in and likely to enter a public water system owned and/or operated by the Muros may have presented an imminent and substantial endangerment to the health of persons who were or might have been users of the public water system, because the public water system and the accompanying wastewater system suffered from serious deficiencies which were a likely source of contamination of the water provided by the public water system, and because EPA had determined that the directives contained in the Emergency Administrative Order were necessary in order to protect the health of persons who were or might have been users of the public water system. The complaint sought: (1) Enforcement of the Emergency Administrative Order; (2) assessment of civil penalties for repeated and continuing violations of the Emergency Administrative Order; and (3) abatement of conditions that presented an imminent and substantial endangerment to the health of persons who were or might have been users of the Muros' public water system.

The proposed consent decree requires the Muros to, among other things: (1) Refrain from operating or allowing any other individual or entity to operate any public water system, as that term is defined in the SDWA, or providing or allowing any other individual or entity to provide water by any means, at the Muro's trailer park for any purpose until EPA grants written permission in accordance with the terms of the consent decree; (2) take all necessary actions to ensure that third parties do not interfere with the operation of any public water system that EPA may authorize the Muros to operate at the Muros' trailer park pursuant to the consent decree; (3) take all necessary actions to ensure that third parties do not violate, or cause the Muros to violate, any of the terms of the consent decree; (4) if EPA authorizes the Muros to operate any public water system at the Muro's trailer park in accordance with the terms of the consent decree, the Muros shall thereafter comply with all applicable requirements of the SDWA, its implementing regulations, and certain other requirements set forth in the consent decree; (5) pay a stipulated civil penalty of $500.00 for past violations of the Emergency Administrative Order; and (6) pay stipulated civil penalties for each future violation of any requirement or deadline of the consent decree.

The Department of Justice will receive comments relating to the consent decree for a period of thirty (30) days from the date of this publication. Comments should be addressed to the Assistant Attorney General, Environment and Natural Resources Division, P.O. Box 7611, U.S. Department of Justice, Washington, DC 20044–7611, and should refer to *United States* v. *Arturo C. Muro and Manuela B. Muro,* Case No. 00cv1484– B(POR), DOJ Ref. No. 90–5–1–1–07113. A copy of all comments also should be sent to Peter J. Sholl, Assistant U.S. Attorney, Office of the U.S. Attorney, 880 Front Street, Room 6293, San Diego, California 92101.

The consent decree may be examined at the Office of the United States Attorney, 880 Front Street, Room 6293, San Diego, California 92101, and at the United States Environmental Protection Agency, Region IX, 75 Hawthorne Street, San Francisco, California 94105. A copy of the consent decree may also be obtained by mail from the Consent Decree Library, P.O. Box 7611, U.S. Department of Justice, Washington, DC 20044–7611, or by faxing a request to Tonia Fleetwood at facsimile number (202) 514–0097, telephone confirmation number (202) 514–1547. In requesting a copy, please refer to *United States* v. *Arturo C. Muro and Manuela B. Muro,* Case No. 00cv1484–B(POR), DOJ Ref. No. 90–5–1–1–07113, and enclose a check in the amount of $8.25 (25 cents per page reproduction cost) payable to the U.S. Treasury.

Ellen M. Mahan,

Assistant Section Chief, Environmental Enforcement Section.

[FR Doc. 02–5672 Filed 3–8–02; 8:45 am]

BILLING CODE 4410–15–M

DEPARTMENT OF JUSTICE

Notice of Lodging of Consent Decree Pursuant to the Comprehensive Environmental Response, Compensation, and Liability Act

In accordance with Departmental policy, 28 CFR 50.7, notice is hereby given that three proposed consent decrees in *United States* v. *Quemetco, Inc., et al.,* Civil Action No. CV–02–225–C, were lodged on January 31, 2002, with the United States District Court for the Western District of Washington. The consent decrees require the defendants Quemetco, Inc., BFI Waste Systems of North America, Inc., and the University of Washington, to compensate the trustees for natural resource damages at the Tualip Landfill Superfund Site, which consist of the State of Washington Department of Ecology, the Tulalip Tribes of Washington, the National Oceanic and Atmospheric Administration of the

United States Department of Commerce, and the United States Department of Interior, for natural resource damages at the Tualip Landfill Superfund Site that have resulted from the release of hazardous substances at the Site. Under the consent decrees Quemetco will pay $39, 839 for natural resource damages, BFI Waste Systems of North America will pay $37, 981, and the University of Washington will pay $39, 139.

The Department of Justice will receive, for a period of thirty (30) days from the date of this publication, comments relating to the proposed consent decrees. Comments should be addressed to the Assistant Attorney General for the Environment and Natural Resources Division, Department of Justice, Washington, DC 20530, and should refer to *United States* v. *Quemetco, Inc., et al.,* DOJ Ref. #90–11–3–1412/9.

The proposed consent decrees may be examined at the office of the United States Attorney, 101 Fifth Avenue, Seattle WA 98104. A copy of the proposed consent decrees may also be obtained by mail from the Consent Decree Library, PO Box 7611, U.S. Department of Justice, Washington, DC 20044–7611 or by faxing a request to Tonia Fleetwood, fax no. (202) 514–0097, phone confirmation number (202) 514–1547. In requesting a copy, please enclose a check in the amount of $5.00 (25 cents per page reproduction cost) payable to the U.S. Treasury.

Robert E. Maher, Jr.,

Assistant Chief, Environmental Enforcement Section, Environment and Natural Resources Division.

[FR Doc. 02–5754 Filed 3–8–02; 8:45 am]

BILLING CODE 4410–01–M

DEPARTMENT OF JUSTICE

Notice of Lodging of Consent Decree Pursuant to the Oil Pollution Act of 1990

In accordance with Departmental policy, notice is hereby given that a proposed Consent Decree in *United States* v. *Texas Petrochemicals Corporation,* Civil Action H–00–3555, was lodged on December 11, 2001, with the United States District Court for the Southern District of Texas.

In this action the United States sued Texas Petrochemicals Corporation pursuant to section 113 of the Clean Air Act (''CAA''), 42 U.S.C. 7413, for TPC's violations of the Standards of Performance for New Stationary Sources (''NSPS''), 40 CFR part 60, subparts A and Db, the National Emission Standards for Hazardous Air Pollutants (''NESHAP''), 40 CFR part 63, subparts G and H; the National Emissions Standards for Hazardous Air Pollutants for Source Categories, 40 CFR part 61, subpart M, relating to asbestos (''asbestos NESHAP''), and for violations of the Texas Air Quality Control Regulations, 30 TAC §§ 115.10–149, at its chemical manufacturing facility in Houston, Texas. The Consent Decree provides for TPC's payment of a civil penalty to the United States in the amount of $113,750 dollars, and requires TPC to bring its facility into compliance with the Texas Air Quality Control Regulations, by installing control equipment consisting of internal floating roofs on Tanks 77, 78 and 79.

The Department of Justice will receive, for a period of thirty (30) days from the date of this publication, comments relating to the proposed Consent Decree. Comments should be addressed to Thomas L. Sansonetti, Assistant Attorney General for the Environment and Natural Resources Division, PO Box 7611, United States Department of Justice, Washington, DC 20044–7611, and should refer to *United States* v. *Texas Petrochemical Corporation,* DOJ Ref. #90–5–2–1–06816.

The proposed Consent Decree may be examined at the office of the United States Attorney, Southern District of Texas, 911 Travis Street, Suite 1500, Houston, Texas 77208; and the Region VI Office of the Environmental Protection Agency, 1445 Ross Avenue, Dallas, Texas. A copy of the Consent Decree may also be obtained by mail from the Consent Decree Library, PO Box 7611, United States Department of Justice, Washington, DC 20044–7611. In requesting a copy please refer to the referenced case and enclose a check in the amount of $4.00 (25 cents per page reproduction costs), payable to the Consent Decree Library.

Catherine R. McCabe,

Deputy Chief, Environmental Enforcement Section, Environment and Natural Resources Division.

[FR Doc. 02–5756 Filed 3–8–02; 8:45 am]

BILLING CODE 4410–15–M

DEPARTMENT OF JUSTICE

Notice of Lodging of Consent Decree Under the Resource Conservation and Recovery Act, Toxic Substances Control Act, and Clean Water Act

Under 28 CFR 50.7, notice is hereby given that on February 1, 2002, a proposed Consent Decree in *United States* v. *Transcontinental Gas Pipe Line Corp.,* Civil Action No. H–02–0387 was lodged with the United States District Court for the Southern District of Texas.

In this action the United States sought injunctive relief and civil penalties related to the natural gas pipeline owned and operated by Transcontinental Gas Pipe Line Corp. (Transco) which stretches from Texas to New York. In the Complaint, the United States seeks injunctive relief and civil penalties pursuant to Resource Conservation and Recovery Act (RCRA) Section 3008(a), (g), and (h), 42 U.S.C. 6928(a), (g), and (h); Clean Water Act (CWA) section 301(a), 33 U.S.C. 1311(a); and Toxic Substances Control Act (TSCA) sections 6 and 17, 15 U.S.C. 2605 and 2616. The United States resolves these claims in the proposed Consent Decree which also requires Transco to perform corrective action consisting of soil and groundwater cleanup of hazardous wastes along its pipeline; perform PCB cleanup work; complete a stormwater discharge monitoring program; and pay a civil penalty of $1.4 million.

The Department of Justice will receive comments relating to the Consent Decree for a period of thirty (30) days from the date of this publication. Comments should be addressed to the Assistant Attorney General, Environment and Natural Resources Division, PO Box 7611, U.S. Department of Justice, Washington, DC 20044–7611, and should refer to *United States* v. *Transcontinental Gas Pipe Line Corp.*, No. H–02–0387 (S.D. Tex.), D.J. Ref. 90–7–1–909.

The Consent Decree may be examined at the Office of the United States Attorney for the Southern District of Texas, 910 Travis, Suite 1500, Houston, TX 77002, and at the Enforcement and Compliance Docket Information Center, U.S. Environmental Protection Agency, Rm. 4033, Ariel Rios Bldg., 1200 Pennsylvania Avenue, NW., Washington, DC 20004. A copy of the Consent Decree may also be obtained by mail from the Consent Decree Library, PO Box 7611, U.S. Department of Justice, Washington, DC 20044–7611 or by faxing a request to Tonia Fleetwood, fax no. (202) 514–0097, phone confirmation number (202) 514–1547. When requesting a full copy with all exhibits, please enclose a check in the amount of $85.25 (25 cents per page reproduction cost) payable to the U.S. Treasury. When requesting a copy without exhibits, please enclose a check in the amount of $16.25 (25 cents per

page reproduction cost) payable to the U.S. Treasury.

Thomas Mariani,

Assistant Chief, Environmental Enforcement Section, Environment and Natural Resources Division.

[FR Doc. 02–5753 Filed 3–8–02; 8:45 am]

BILLING CODE 4410–15–M

DEPARTMENT OF JUSTICE

Notice of Lodging of Consent Decree Under the Clean Air Act

Notice is hereby given that on February 1, 2002, a proposed Consent Decree (''Decree'') in *United States* v. *Williams Field Services Company and Williams Gas Processing Company, Inc.,* Civil Action No. 02–B–0199, was lodged with the United States District Court for the District of Colorado. The action was filed pursuant section 113(b) of the Clean Air Act (the ''Act''), 42 U.S.C. 7413(b). The action concerns modifications of the so-called Ignacio Plant, a natural gas processing plant located on privately owned fee land situated within the exterior boundaries of the Southern Ute Indian Reservation near Durango, Colorado, consisting of the installation of two dehydrators allegedly in violation of the Act's Prevention of Significant Deterioration (''PSD'') program. Pursuant to the terms of the settlement the Companies are required to pay a civil penalty of $951,139 and obtain a PSD permit from EPA for those sources.

The Department of Justice will receive comments relating to the proposed Consent Decree for a period of thirty (30) days from the date of this publication. Comments should be addressed to the Assistant Attorney General, Environment and Natural Resources Division, Department of Justice, and sent to the Denver Field Office, 999 18th Street, Suite 945NT, Denver, CO 80202, and should refer to *United States* v. *Williams Field Services Company et al.,* D.J. Ref. 90–5–2–1–06938/1.

The Decree may be examined at the offices of the EPA Library, EPA Region VIII, located at 999 18th Street, First Floor, Denver, Colorado 80202. A copy of the Decree may also be obtained by mail from the Consent Decree Library, PO Box 7611, U.S. Department of Justice, Washington, DC 20044–7611 or by faxing a request to Tonia Fleetwood, fax no. (202) 514–0097, phone confirmation number (202) 514–1547. In requesting a copy, please enclose a check in the amount of $6.25 (25 cents per page reproduction cost) payable to the U.S. Treasury.

Robert Brook,

Assistant Section Chief, Environmental Enforcement Section, Environment and Natural Resources Division.

[FR Doc. 02–5755 Filed 3–8–02; 8:45 am]

BILLING CODE 4410–15–M

DEPARTMENT OF JUSTICE

Antitrust Division

Notice Pursuant to The National Cooperative Research and Production Act of 1993—New Productivity Initiative, Inc.

Notice is hereby given that, on January 16, 2002, pursuant to section 6(a) of the National Cooperative Research and Production Act of 1993, 15 U.S.C. 4301 *et seq.* (''the Act''), New Productivity Initiative, Inc. has filed written notifications simultaneously with the Attorney General and the Federal Trade Commission disclosing changes in its membership status. The notifications were filed for the purpose of extending the Act's provisions limiting the recovery of antitrust plaintiffs to actual damages under specified circumstances. Specifically, Cadance Design Systems, Chelmsford, MA; and Compaq Computer Corporation, Houston, TX have been added as parties to this venture.

No other changes have been made in either the membership or planned activity of the group research project. Membership in this group research project remains open, and New Productivity Initiative, Inc. intends to file additional written notification disclosing all changes in membership.

On October 4, 2001, New Productivity Initiative, Inc. filed its original notification pursuant to section 6(a) of the Act.

The Department of Justice published a notice in the **Federal Register** pursuant to section 6(b) of the Act on December 5, 2001 (66 FR 63259).

Constance K. Robinson,

Director of Operations, Antitrust Division.

[FR Doc. 02–5757 Filed 3–8–02; 8:45 am]

BILLING CODE 4410–11–M

DEPARTMENT OF LABOR

Employment and Training Administration

Investigations Regarding Certifications of Eligibility To Apply for NAFTA Transitional Adjustment Assistance

Petitions for transitional adjustment assistance under the North American Free Trade Agreement-Transitional Adjustment Assistance Implementation Act (Pub. L. 103–182), hereinafter called (NAFTA–TAA), have been filed with State Governors under Section 250(b)(1) of Subchapter D, Chapter 2, Title II, of the Trade Act of 1974, as amended, are identified in the Appendix to this Notice. Open notice from a Governor that a NAFTA–TAA petition has been received, the Director of the Division of Trade Adjustment Assistance (DTAA), Employment and Training Administration (ETA), Department of Labor (DOL), announces the filing of the petition and takes action pursuant to paragraphs (c) and (e) of section 250 of the Trade Act.

The purpose of the Governor's actions and the Labor Department's investigations are to determine whether the workers separated from employment on or after December 8, 1993 (date of enactment of Pub. L. 103–182) are eligible to apply for NAFTA–TAA under Subchapter D of the Trade Act because of increased imports from or the shift in production to Mexico or Canada.

The petitioners or any other persons showing a substantial interest in the subject matter of the investigations may request a public hearing with the Director of DTAA at the U.S. Department of Labor (DOL) in Washington, DC provided such request if filed in writing with the Director of DTAA not later than March 21, 2002.

Also, interested persons are invited to submit written comments regarding the subject matter of the petitions to the Director of DTAA at the address shown below not later than March 21, 2002.

Petitions filed with the Governors are available for inspection at the Office of the Director, DTAA, ETA, DOL, Room C–5311, 200 Constitution Avenue, NW., Washington, DC 20210.

Signed at Washington, DC this 28th day of February 2002.

Edward A. Tomchick,

Director, Division of Trade Adjustment Assistance.

APPENDIX

Subject firm	Location	Date received at Governor's office	Petition number	Articles produced
Corning Cable (Wkrs)	Hickory, NC	01/02/2002	NAFTA–5,735	fiber optic cable.
Solon Manufacturing (Co.)	Skowhegan, ME	01/16/2002	NAFTA–5,736	ice cream sticks.
Harsco Corp.—Heckett Multiserv (Wkrs)	Whiting, IN	01/15/2002	NAFTA–5,737	steel.
Drexel Heritage Furnshings (Co.)	Drexel, NC	01/22/2002	NAFTA–5,738	residential furniture.
Shield Acquisition—Coldwell Moser (Co.)	New Albany, IN	01/22/2002	NAFTA–5,739	saddle skirting.
Rem Electronics Supply (Co.)	El Paso, TX	01/22/2002	NAFTA–5,740	distributed electronics parts.
Western Power Products (Co.)	Hood River, OR	01/14/2002	NAFTA–5,741	fiberglass enclosures.
Cannon County Knitting Mills (Wkrs)	Smithville, TN	01/22/2002	NAFTA–5,742	knit wearing apparel.
Zeeland Chemical—Cambrex Corp. (Wkrs).	Zeeland, MI	01/22/2002	NAFTA–5,743	chemicals.
Haworth (Wkrs)	Haworth, MI	01/22/2002	NAFTA–5,744	chairs.
Gold Toe Brands (Co.)	Bally, PA	01/18/2002	NAFTA–5,745	men and women's socks.
Loranger Manufacturing (Co.)	Warren, PA	01/18/2002	NAFTA–5,746	apparel.
Park Hannifin (Wkrs)	Reading, PA	01/28/2002	NAFTA–5,747	repair multi spindle screw machines.
J and E International Sales (Co.)	El Paso, TX	01/18/2002	NAFTA–5,748	sales/distribution of copper tubing.
Goodyear Dunlop Tires N.A. (USWA)	Huntsville, AL	01/18/2002	NAFTA–5,749	radial passenger and light truck tires.
Telex Communications (Wkrs)	Buchanan, MI	01/28/2002	NAFTA–5,750	audio service.
Goodyear Tire and Rubber (USWA)	East Gadsden, AL	01/15/2002	NAFTA–5,751	radial passenger tires and hummer.
Cascade General (Co.)	Portland, OR	01/07/2002	NAFTA–5,752	pump shafts.
Salem Oil and Grease (Co.)	Salem, MA	01/16/2002	NAFTA–5,753	leather softness, waxes and greases.
Polariod Corporation (Wkrs)	Camb, MA	01/17/2002	NAFTA–5,754	film and equipment.
Delphi Automotive System (Wkrs)	Oak Creek, WI	01/16/2002	NAFTA–5,755	auto body computers phones and service.
AT and T (Co.)	Los Angeles, CA	01/07/2002	NAFTA–5,756	phones and service.
Wateree Textile (Co.)	Lugoff, SC	01/17/2002	NAFTA–5,757	taffata lining fabrics.
Bosch Rexroth Croporation (IAMAW)	Sturtevant, WI	01/16/2002	NAFTA–5,758	hydraulic pumps, vales, manifolds.
Hoffman Enclosures—Pentair (Wkrs)	Anoka, MN	01/16/2002	NAFTA–5,759	enclosures.
Donaldson Company (Co.)	Nicholasville, KY	01/25/2002	NAFTA–5,760	panels, hoppers, fan assemblies.
Clear Pine Mouldings (Wkrs)	Prineville, OR	01/22/2002	NAFTA–5,761	doors and windows for residentual.
JTD, Inc. (Wkrs)	Tigard, OR	01/25/2002	NAFTA–5,762	aluminum tooling (castings).
Leavitt Communications (Wkrs)	Lincolnshire, IL	02/20/2002	NAFTA–5,763	wireless products.
J. Dashew, Inc. (Wkrs)	Baltimore, MD	11/14/2002	NAFTA–5,764	industrial sewing machine and supplies.
Prudential Steel—Maverick Tube (Wkrs)	Langview, WA	01/25/2002	NAFTA–5,765	steel.
Badger States Tanning (Wkrs)	Milwaukee, WI	01/28/2002	NAFTA–5,766	suede leather splits.
Huhtamaki Foodservices, Chinet Co. (The) (PACE).	Waterville, ME	01/23/2002	NAFTA–5,767	laminated pulp molded plates.
Ultrafem, Inc. (Co.)	Missoula, MT	01/17/2002	NAFTA–5,768	sanitary protection products.
Materials Processing (Co.)	Riverview, MI	01/22/2002	NAFTA–5,769	coated axle.
Kolenda Tool and Die (Co.)	Wyoming, MI	01/23/2002	NAFTA–5,770	injection molds and plastic molded parts.
Dillon Yarn (Wkrs)	Dillon, SC	01/23/2002	NAFTA–5,771	yarn.
Asarco, Inc.—Amarillo Copper Refinery (USWA).	Amarillo, TX	01/23/2002	NAFTA–5,772	copper.
Superior Milling (Wkrs)	Watersmeet, MI	01/23/2002	NAFTA–5,773	green lumber.
Xpectra, Inc. (Wkrs)	Santa Cruz, CA	01/18/2002	NAFTA–5,774	plastic injection moldings.
Printing Arts America (Wkrs)	Brisbane, CA	01/22/2002	NAFTA–5,775	printed materials.
Blauer Manufacturing—CAM Corp. (Co.)	Chatom, AL	01/23/2002	NAFTA–5,776	police outerwear.
R.R. Donnelley (Wkrs)	Lynchburg, VA	01/22/2002	NAFTA–5,777	catalogs.
Tyco Electronics (Wkrs)	Georgetown, KY	01/23/2002	NAFTA–5,778	wiring harnesses and cable.
Brunswick Foreign Trade Zone (Wkrs)	Brunswick, GA	01/23/2002	NAFTA–5,779	paper products.
AG Simpson Automotive Systems (UAW)	Sterling Heights, MI	01/24/2002	NAFTA–5,780	automotive bumper assemblies.
Pak-Mor Manufacturing (Wkrs)	San Antonio, TX	01/28/2002	NAFTA–5,781	front loader body shell.
Allegro Microsystems (Wkrs)	Willow Grove, PA	01/28/2002	NAFTA–5,782	integrated circuits.
Maska U.S. (Co.)	Williston, VT	01/28/2002	NAFTA–5,783	hockey apparel.
Ferraz Shawmut (Co.)	Newburyport, MA	01/24/2002	NAFTA–5,784	electrical fuses.
Symbol Technologies (Wkrs)	Houston, TX	01/23/2002	NAFTA–5,785	bar code scanners.
Flextronics Enclosures (Co.)	Kingston, PA	01/25/2002	NAFTA–5,786	enclosures (cabinets).
Flextronics Enclosures (Wkrs)	Smithfield, NC	01/29/2002	NAFTA–5,787	motorola cabinets.
United Central Industrial—Blue Ridge (Co.).	Bassett, VA	01/25/2002	NAFTA–5,788	industrial supplies and tools.
Genelity Corp. (Wkrs)	Jessup, PA	01/29/2002	NAFTA–5,789	artificial christmas trees.
Owens Illinois (Wkrs)	Newburyport, MA	01/14/2002	NAFTA–5,790	plastic containers.
L and G Manufacturing (UNITE)	Archbald, PA	01/29/2002	NAFTA–5,791	men's suit and dress pants.
TNS Mills (Co.)	Rockingham, NC	01/29/2002	NAFTA–5,792	textile yarn.
Ferro Corporation (Wkrs	Pittsburgh, PA	01/29/2002	NAFTA–5,793	glass enamels, ceramic coatings.
Emerson Electric—Daniel Measurement (Co.).	Statesboro, GA	02/04/2002	NAFTA–5,794	turbine and valve product lines.
Lakemont Mfg. (Co.)	Lakemont, GA	01/30/3002	NAFTA–5,795	ladies pants.
John Solomon (Co.)	Somerville, MA	01/31/2002	NAFTA–5,796	textiles, pockets etc.
Engelhand Corporation (Wkrs)	McLntyre, GA	01/30/2002	NAFTA–5,797	mined kaolin.

APPENDIX—Continued

Subject firm	Location	Date received at Governor's office	Petition number	Articles produced
Oxford Slacks (Co.)	Monroe, GA	01/30/2002	NAFTA–5,798	men's slacks.
Aalfs Manufacturing (Co.)	Texarkana, AR	02/04/2002	NAFTA–5,799	denim bottoms, jeans, shorts.
FDB, Inc. (Co.)	Lincolnton, GA	02/04/2002	NAFTA–5,800	men's and ladies jackets.
Associated Spring—Barnes Group (Co.)	Dallas, TX	02/04/2002	NAFTA–5,801	power brake and return springs.
Justin Brands (Co.)	Ft. Worth, TX	02/04/2002	NAFTA–5,802	boots.
Optek Technology (Wkrs)	Carrollton, TX	01/30/2002	NAFTA–5,803	automotive plastic parts.
R.G. Barry (Co.)	Laredo, TX	01/30/2002	NAFTA–5,804	slipper components.
GeoComm Corporation (Co.)	El Paso, TX	01/30/2002	NAFTA–5,805	digital telecommunication services.
Accuride (Wkrs)	Columbia, TN	01/25/2002	NAFTA–5,806	light truck wheel.
Angelica Corporation (Wkrs)	Savannah, TN	01/30/2002	NAFTA–5,807	health care garments.
Forth, Inc.—Altex, Inc. (Co.)	Charlotte, NC	02/04/2002	NAFTA–5,808	knitted cotton.
Haworth, Inc.—Myrtle Mueller (Co.)	Chadbourn, NC	01/30/2002	NAFTA–5,809	file cabinet, tables.
Sanmina, Inc. (Wkrs)	Clinton, NC	01/28/2002	NAFTA–5,810	metal.
Thomson Multimedia (Wkrs)	Indianapolis, IN	02/05/2002	NAFTA–5,811	test equipment.
3M Bedford Park (Co.)	Bedford Park, IL	02/05/2002	NAFTA–5,812	paper, film and foil pressure.
CHF Industries (Wkrs)	Loris, SC	02/05/2002	NAFTA–5,813	bedding.
Tyco International (Co.)	Arab, AL	02/04/2002	NAFTA–5,814	motor controls.
Angelica Corporation (Wkrs)	Collinwood, TN	02/04/2002	NAFTA–5,815	hospital apparel.
Mitel Network—Network Access Solutions (Wkrs).	Ogdensburg, NY	02/01/2002	NAFTA–5,816	printed circuit board.
parker Hannifin (Co.)	Sanasota, FL	02/01/2002	NAFTA–5,817	valves.
S–B Power Tool (Co.)	Walnut Ridge, AR	02/04/2002	NAFTA–5,818	sanders, grinders, hammers.
Seagate US LLC (Wkrs)	Oklahoma City, OK	02/01/2002	NAFTA–5,819	hard disc drives.
Albany International (Co.)	Greenville, SC	01/31/2002	NAFTA–5,820	paper machines.
BH Electronics (Wkrs)	Marshall, MN	01/31/2002	NAFTA–5,821	transformer.
Sims Manufacturing (Co.)	Rutland, MA	01/30/2002	NAFTA–5,822	tractor cabs.
LeeMah Electronics (Wkrs)	San Francisco, CA	01/31/2002	NAFTA–5,823	circuit boards.
Uniroyal Goodrich Tire (USWA)	Tuscaloose, AL	01/30/2002	NAFTA–5,824	radial passenger tires.
Vaapco Group—Novatch Mfg. (Co.)	Millers Tavern, VA	01/23/2002	NAFTA–5,825	brake pads.
Fruit of the Loom (Wkrs)	Jamestown, KY	01/30/2002	NAFTA–5,826	men's and women's underware.
Carey Industries (Co.)	Danbury, CT	01/29/2002	NAFTA–5,827	textile dye.
T and K Manufacturing (Co.)	Brownstown, PA	01/31/2002	NAFTA–5,828	women's undergarments.
Chambersburg Engineering (Co.)	Chambersburg, PA	02/04/2002	NAFTA–5,829	heavy equipment.
D and M Tool (Co.)	Meadville, PA	02/04/2002	NAFTA–5,830	jigs, dies, fixtures, molds.
Champion Part (Wkrs)	Beech Creek, PA	02/04/2002	NAFTA–5,831	carburators axles.
Pittsburgh Annealing Box (USWA)	Pittsburgh, PA	02/04/2002	NAFTA–5,832	annealing inner covers.
Tyco Electronics (Wkrs)	Carlisle, PA	02/04/2002	NAFTA–5,833	electronic terminals.
Emerson Process Brooks Instrument (Wkrs).	Hatfield, PA	02/04/2002	NAFTA–5,834	sensor winding.
Pabst Brewing (Wkrs)	Fogelsville, PA	02/01/2002	NAFTA–5,835	beer and malt beverages.
Tyco Electronics (Wkrs)	Jacobus, PA	02/05/2002	NAFTA–5,836	electrical connectors.
Canto Tool (Co.)	Meadville, PA	02/05/2002	NAFTA–5,837	tooling.
Philadelphia Mixers (Co.)	Palmyra, PA	02/01/2002	NAFTA–5,838	gearing, shafts, etc.
Square D (Co.)	Oshkosh, WI	02/11/2002	NAFTA–5,839	low voltage transformers & medical panel.
McCoy Ellison (Co.)	Monroe, NC	02/11/2002	NAFTA–5,840	textile equipment.
Biltwell Clothing (UNITE)	Farmington, MO	01/30/2002	NAFTA–5,841	garments.
Schumacher Electric (Co.)	Hoopeston, IL	02/05/2002	NAFTA–5,842	automotive battery chargers.
Dale Electronics (Wkrs)	Norfolk, NE	02/04/2002	NAFTA–5,843	e-rel, mil-chip.
Argus International (Wkrs)	Medley, FL	02/06/2002	NAFTA–5,844	pants, shirts and women's suits.
Hale Products (Co.)	St. Joseph, TN	02/06/2002	NAFTA–5,845	portable fire pumps.
Evy of California (Wkrs)	Bakersfield, CA	01/28/2002	NAFTA–5,846	apparel.
Bowater (PACE)	Coosa Pines, AL	02/07/2002	NAFTA–5,847	pulp and paper.
Tee Tease LLC (Azteca)(Wkrs)	Commerce, CA	11/07/2001	NAFTA–5,848	print tee shirts.
Levolor Kirsch Window Fashions (Co.)	Westminster, CA	02/06/2002	NAFTA–5,849	wood and faux wood.
RHI Refractories America—AP Green Ind. (Co.).	Middletown, PA	02/08/2002	NAFTA–5,850	precast refractory shapes.
California Joy (Co.)	Glendale, CA	02/06/2002	NAFTA–5,851	swimwear.
Southwire Company (Co.)	Carrollton, GA	02/07/2002	NAFTA–5,852	fuel tanks.
Tri Way Mfg. (Wkrs)	El Paso, TX	02/07/2002	NAFTA–5,853	injection molds.
Smiths Group—Portex, Inc. (Co.)	Fort Myers, FL	02/08/2002	NAFTA–5,854	Anesthesia Circuits.
Low Complexity Mfg. Group (Co.)	Utica, NY	10/25/2002	NAFTA–5,855	fusel assemblies.
Black and Decker (Co.)	Nashville, TN	02/07/2002	NAFTA–5,856	reconditioning of tools.
Tyco Printed Circuit Group (Wkrs)	Dallas, OR	02/04/2002	NAFTA–5,857	printed circuit boards.
West Point Foundry and Machine (Co.)	West Point, GA	02/15/2002	NAFTA–5,858	sale, service of textile machinery.
Schott Corporation (Co.)	Jefferson, MN	02/15/2002	NAFTA–5,859	wire.
Arlee Home Fashions (Wkrs)	Leachville, AR	02/19/2002	NAFTA–5,860	chairpads and pillows.
L.E. Mason Co.—Thomas and Betts (Co.)	Boston, MA	02/11/2002	NAFTA–5,861	zinc.
Schrader Machine and Tool—SMT Auto (Wkrs).	Hanover, MI	01/08/2002	NAFTA–5,862	auto parts.

APPENDIX—Continued

Subject firm	Location	Date received at Governor's office	Petition number	Articles produced
Thomas and Betts (Co.)	Quakertown, PA	02/15/2002	NAFTA–5,863	application tools.
Westwood LLC (Wkrs)	Marion, NC	02/12/2002	NAFTA–5,864	cloth.
National Steel Pellet (USWA)	Keewtin, MN	02/14/2002	NAFTA–5,865	steel pellet.
Exide Technologies (Co.)	Florence, MS	02/14/2002	NAFTA–5,866	batteries.
Tracy Minntronix (Wkrs)	Tracy, MN	01/31/2002	NAFTA–5,867	transformers.
Alcoa Wheel Products—Reynolds Wheel (Co.).	Lebanon, VA	02/13/2002	NAFTA–5,868	hot forging, re-machining.
Cherry Automotive (Wkrs)	Waukegan, IL	02/22/2002	NAFTA–5,869	electronic components.

[FR Doc. 02–5570 Filed 3–8–02; 8:45 am]

BILLING CODE 4510–30–M

NATIONAL AERONAUTICS AND SPACE ADMINISTRATION

[Notice 02–034]

NASA Advisory Council, Planetary Protection Advisory Committee; Meeting

AGENCY: National Aeronautics and Space Administration.

ACTION: Notice of meeting.

SUMMARY: In accordance with the Federal Advisory Committee Act, Public Law 92–463, as amended, the National Aeronautics and Space Administration announces a forthcoming meeting of the NASA Advisory Council (NAC), Planetary Protection Advisory Committee (PPAC).

DATES: Monday, March 18, 2002, 1 p.m. to 5 p.m., Tuesday, March 19, 2002, 8:30 a.m. to 5 p.m.

ADDRESSES: NASA Headquarters, Conference Room 7H46, 300 E Street, SW., Washington, DC 20546.

FOR FURTHER INFORMATION CONTACT: Ms. Marian Norris, Code SB, National Aeronautics and Space Administration, Washington, DC 20546, 202/358–4452.

SUPPLEMENTARY INFORMATION: The meeting will be open to the public up to the capacity of the room. The agenda for the meeting includes the following:

—NASA Planetary Protection Policy
—NASA's Mars and Solar System Exploration Program
—Planetary Protection Advisory Committee's Role and Responsibilities
—Issues in Returned Sample Handling
—MUSES–C Mission
—Mars Planetary Protection: Issues and Status
—Emerging Issues in Planetary Protection
—Europa and the Outer Planets
—Human Exploration

It is imperative that the meeting be held on these dates to accommodate the scheduling priorities of the key participants. Visitors will be requested to sign a visitor's register.

Sylvia K. Kraemer,

Advisory Committee Management Officer, National Aeronautics and Space Administration.

[FR Doc. 02–5715 Filed 3–8–02; 8:45 am]

BILLING CODE 7510–01–P

NATIONAL AERONAUTICS AND SPACE ADMINISTRATION

[Notice 02–035]

NASA Advisory Council, Space Science Advisory Committee, Sun-Earth Connection Advisory Subcommittee; Meeting

AGENCY: National Aeronautics and Space Administration (NASA).

ACTION: Notice of meeting.

SUMMARY: In accordance with the Federal Advisory Committee Act, Public Law 92–463, as amended, the National Aeronautics and Space Administration announces a forthcoming meeting of the NASA Advisory Council, Space Science Advisory Committee, Sun-Earth Connection Advisory Subcommittee.

DATES: Monday, April 1, 2002, 8:30 a.m. to 5 p.m.; Tuesday, April 2, 2002, 8:30 to 5 p.m.; and Wednesday, April 3, 8:30 a.m. to noon.

ADDRESSES: NASA Headquarters, Conference Room 5H46, 300 E Street, SW., Washington, DC 20546.

FOR FURTHER INFORMATION CONTACT: Ms. Marian Norris, Code SB, National Aeronautics and Space Administration, Washington, DC 20546, 202/358–4452.

SUPPLEMENTARY INFORMATION: The meeting will be open to the public up to the capacity of the room. The agenda for the meeting includes the following topics:

—Sun-Earth Connection Program Overview: Budget, Ongoing Program, Future Activities
—Solar Terrestrial Probes Update
—Living With a Star Update
—Sun-Earth Connection Roadmap and Strategic Planning
—Discussion and Writing Groups

It is imperative that the meeting be held on these dates to accommodate the scheduling priorities of the key participants. Visitors will be requested to sign a visitor's register.

Sylvia K. Kraemer,

Advisory Committee Management Officer, National Aeronautics and Space Administration.

[FR Doc. 02–5716 Filed 3–8–02; 8:45 am]

BILLING CODE 7510–01–P

NATIONAL AERONAUTICS AND SPACE ADMINISTRATION

[Notice (02–032)]

Notice of Prospective Patent License

AGENCY: National Aeronautics and Space Administration.

ACTION: Notice of prospective patent license.

SUMMARY: NASA hereby gives notice that the Enduro Medical Technology, Inc. of Manchester, Connecticut, has applied for a partially exclusive license to practice the inventions described and claimed in: U.S. Patent No. 5,174,590, entitled ''Compliant Walker,'' and U.S. Patent No. 4,946,421, entitled ''Robot Cable-Compliant Joint,'' both patents being assigned to the United States of America as represented by the Administrator of the National Aeronautics and Space Administration. Written objections to the proposed grant of a license should be sent to NASA Goddard Space Flight Center. NASA has not yet made a determination to grant the requested license and may deny the requested license even if no objections are submitted within the comment period.

DATES: Responses to this notice must be received by March 26, 2002.

FOR FURTHER INFORMATION CONTACT: Diana Cox, Lead Patent Counsel, NASA Goddard Space Flight Center, Code 710.1, Greenbelt, Maryland, 20771.

Dated: March 4, 2002.

Paul G. Pastorek,

General Counsel.

[FR Doc. 02–5713 Filed 3–8–02; 8:45 am]

BILLING CODE 7510–01–P

NATIONAL AERONAUTICS AND SPACE ADMINISTRATION

[Notice 02–033]

Notice of Prospective Patent License

AGENCY: National Aeronautics and Space Administration.

ACTION: Notice of prospective patent license.

SUMMARY: NASA hereby gives notice that Instrumentation Technology Associates, Inc., having offices in Exton, Pennsylvania, has applied for a partially exclusive license to practice the inventions described and claimed in U.S. Patent No. 5,827,531, entitled ''Multi-Lamellar, Immiscible Phase Microencapsulation of Drugs''; U.S. Patent No. 6,099,864, entitled ''INSITU Activation of Microcapsules''; U.S. Patent No. 6,214,300, entitled ''Microencapsulation and Electrostatic Processing Device (MEPS)''; U.S. Patent No. 6,103,271, entitled ''Microencapsulation & Electrostatic Coating Process''; pending U.S. patent application entitled ''Protein Crystal Encapsulation Process,'' NASA Case No. MSC–22936–1–SB; pending U.S. patent application entitled ''Externally Triggered Microcapsules,'' NASA Case No. MSC22939–1–SB and pending continuations, divisional applications, and foreign applications corresponding to the above-listed cases. Each of the above-listed patents and patent applications are assigned to the United States of America as represented by the Administrator of the National Aeronautics and Space Administration. Written objections to the prospective grant of a license should be sent to the Johnson Space Center.

DATES: Responses to this notice must be received by March 26, 2002.

FOR FURTHER INFORMATION CONTACT: James Cate, Patent Attorney, NASA Johnson Space Center, Mail Stop HA, Houston, TX 77058–8452; telephone (281) 483–1001.

Dated: March 4, 2002.

Paul G. Pastorek,

General Counsel.

[FR Doc. 02–5714 Filed 3–8–02; 8:45 am]

BILLING CODE 7510–01–P

NATIONAL FOUNDATION ON THE ARTS AND THE HUMANITIES

Meeting of the National Museum Services Board

AGENCY: Institute of Museum and Library Services.

ACTION: Notice of meeting.

SUMMARY: This notice sets forth the agenda of the forthcoming meeting of the National Museum Services Board. This notice also describes the function of the board. Notice of this meeting is required under the Sunshine in Government Act and regulations of the Institute of Museum and Library Services, 45 CFR 1180.84.

Time/Date: 1:30 p.m.–4:30 p.m. on Friday, March 22, 2002.

Status: Open.

Address: The Fells Point Room of the Renaissance Harborplace Hotel, 202 East Pratt Street, Baltimore, MD 21202, (410) 547–1200.

FOR FURTHER INFORMATION CONTACT: Elizabeth Lyons, Special Assistant to the Director, Institute of Museum and Library Services, 1100 Pennsylvania Avenue, NW., Room 510, Washington, DC 20506, (202) 606–4649.

SUPPLEMENTARY INFORMATION: The National Museum Services Board is established under the Museum Services Act, Title II of the Arts, Humanities, and Cultural Affairs Act of 1976, Public Law 94–462. The Board has responsibility for the general policies with respect to the powers, duties, and authorities vested in the Institute under the Museum Services Act.

The meeting on Friday, March 22, 2002 will be open to the public. If you need special accommodations due to a disability, please contact: Institute of Museum and Library Services, 1100 Pennsylvania Avenue, NW., Washington, DC 20506—(202) 606–8536—TDD (202) 606–8636 at least seven (7) days prior to the meeting date.

Agenda

83rd Meeting of the National Museum Services Board at The Renaissance Harborplace Hotel, 202 East Pratt Street, Baltimore, MD 21202, The Fells Point Room on Friday, March 22, 2002.

1:30 p.m.–4:30 p.m.

I. Chairman's Welcome
II. Approval of Minutes from the 82nd NMSB Meeting
III. Director's Report
IV. Staff Reports
(a) Office of Management and Budget
(b) Office of Public and Legislative Affairs
(c) Office of Technology and Research
(d) Office of Museum Services
(e) Office of Library Services
V. Special Report on Research Findings
VI. September 11, 2002
VII. Coming Up Taller program

Dated: March 7, 2002.

Teresa LaHaie,

Administrative Officer, National Foundation on the Arts and Humanities, Institute of Museum and Library Services.

[FR Doc. 02–5889 Filed 3–7–02; 2:16 pm]

BILLING CODE 7036–01–M

NATIONAL SCIENCE FOUNDATION

Business and Operations Advisory Committee; Meeting

In accordance with Federal Advisory Committee Act (Pub. L. 92–463, as amended), the National Science Foundation announces the following meeting:

Name: Business and Operations Advisory Committee (9556).

Date/Time: March 26, 2002; 8:30 a.m. to 5 p.m. (EST), March 27, 2002; 8:30 a.m. to 3 p.m. (EST).

Place: National Science Foundation, 4201 Wilson Boulevard, Room 1235, Arlington, VA.

Type of Meeting: Open.

Contact Person: Louise McIntire, National Science Foundation, 4201 Wilson Boulevard, Arlington, VA 22230 (703) 292–8200.

Purpose of Meeting: To provide advice concerning issues related to the oversight, integrity, development and enhancement of NSF's business operations.

Agenda:

March 26, 2002

AM: Introductions and Updates—Office of Budget, Finance, and Award Management and Office of Information and Resource Management activities; President's Management Agenda.

PM: Presentation and Discussion—Management Controls and Audit Findings.

March 27, 2002

AM: Discussion—Meet with NSF Deputy Director; presentation by NSF ''customer'' panel.

PM: Discussion—Planning for next meeting; feedback; other business.

Dated: March 5, 2002.

Susanne Bolton,

Committee Management Officer.

[FR Doc. 02–5707 Filed 3–8–02; 8:45 am]

BILLING CODE 7555–01–M

NATIONAL SCIENCE FOUNDATION

Enforcement of Title VI of the Civil Rights Act of 1964—National Origin Discrimination Against Persons With Limited English Proficiency; Policy Guidance

AGENCY: National Science Foundation.

ACTION: Notice.

SUMMARY: The National Science Foundation (NSF) is publishing policy guidance on Title VI's prohibition against national origin discrimination as it affects limited English proficient persons. This policy guidance does not create new obligations, but rather, clarifies existing Title VI responsibilities. The purpose of this document is to set forth general principles for the recipients of NSF financial assistance to apply when developing services to individuals with limited English proficiency as required by Title VI of the Civil Rights Act of 1964.

DATES: This guidance is effective immediately. Comments must be submitted on or before May 10, 2002. NSF will review all comments and will determine what modifications to the policy guidance, if any, are necessary.

ADDRESSES: Interested persons should submit written comments to Office of Equal Opportunity Programs, National Science Foundation, 4201 Wilson Blvd., Arlington, VA 22230. Comments may also be submitted by e-mail to: *rleichte@nsf.gov.*

FOR FURTHER INFORMATION CONTACT: Ana Ortiz or Ruth Leichter at the above address or by telephone at 703–292–8020; TDD: 703–292–9027. Arrangements to receive the policy in an alternative format may be made by contacting the named individuals.

Dated: February 19, 2002.

Ana A. Ortiz,

Director, Office of Equal Opportunity Programs, National Science Foundation.

SUPPLEMENTARY INFORMATION: Title VI of the Civil Rights Act of 1964, 42 U.S.C. 2000d, *et seq.* and its implementing regulations provide that no person shall be subjected to discrimination on the basis of race, color, or national origin under any program or activity that receives federal financial assistance. The purpose of this policy guidance is to clarify the responsibilities of recipients of federal financial assistance from the National Science Foundation (NSF), and assist them in fulfilling their responsibilities to limited English proficient (LEP) persons pursuant to Title VI of the Civil Rights Act of 1964 and implementing regulations. The policy guidance reiterates NSF's longstanding position that in order to avoid discrimination against LEP persons on the grounds of national origin, recipients must take reasonable steps to ensure that such persons have meaningful access to the programs, services, and information those recipients provide, free of charge.

I. Background

On August 11, 2000, the President issued Executive Order 13166, titled ''Improving Access to Services by Persons With Limited English Proficiency.'' 65 FR 50121 (August 16, 2000). On the same day, the Assistant Attorney General for Civil Rights issued a Policy Guidance Document, titled ''Enforcement of Title VI of the Civil Rights Act of 1964—National Origin Discrimination Against Persons With Limited English Proficiency'' (hereinafter referred to as ''DOJ LEP Guidance''), reprinted at 65 FR 50123 (August 16, 2000). However, pursuant to a memorandum issued by the United States Department of Justice on October 26, 2001, NSF is republishing this guidance and inviting public comment on the guidance.

Executive Order 13166 requires federal agencies to assess and address the needs of otherwise eligible persons seeking access to federally conducted programs and activities who, due to limited English proficiency, cannot fully and equally participate in or benefit from those programs and activities. The DOJ LEP Guidance in turn advises each federal department or agency to ''take reasonable steps to ensure 'meaningful' access [to LEP individuals] to the information and services they provide.'' DOJ LEP Guidance, 65 FR at 50124. The DOJ LEP Guidance goes on to provide that what constitutes reasonable steps to ensure meaningful access will be contingent on a number of factors. Among the factors to be considered are the number or proportion of LEP persons in the eligible service population, the frequency with which LEP individuals come in contact with the program, the importance of the service provided by the program, and the resources available to the agency. Id. The DOJ LEP Guidance explains that the identification of ''reasonable steps'' to provide oral and written services in languages other than English is to be determined on a case-by-case basis through a balancing of all four factors. As required by Executive Order 13166, this policy guidance is consistent with the compliance standards set out in the DOJ LEP Guidance.

II. Legal Background

The Title VI requirement to provide meaningful access to LEP persons is not new. Section 601 of Title VI of the Civil Rights Act of 1964, 42 U.S.C. Section 2000d, *et seq.* states: ''No person in the United States shall on the ground of race, color or national origin, be excluded from participation in, be denied the benefits of, or be subjected to, discrimination under any program or activity receiving federal financial assistance.'' This is further ordered by Executive Order 13166, ''Improving Access to Services for Persons With Limited English Proficiency,'' and United States Department of Justice Guidance as published in the **Federal Register**, Vol. 65, No. 159, August 16, 2000. Pursuant to its coordination authority over federal enforcement of Title VI, DOJ addressed in 1976 the circumstances under which recipient/covered entities might be required to provide written language assistance to LEP persons. See 28 CFR 42.405(d)(1). These regulations ''govern the respective obligations of Federal agencies regarding enforcement of Title VI.'' 28 CFR 42.405. Section 42.405(d)(1) formalized LEP obligations under Title VI which were sustained by the Supreme Court in Lau v. Nichols, 414 U.S. 563 (1974). Thus, this Guidance draws its authority from Title VI of the Civil Rights Act of 1964, as amended, 42 U.S.C. 2000d, *et seq.*; 45 CFR, Part 611 (NSF's Title VI Regulations); and 28 CFR 42.401, *et seq.* (DOJ Title VI enforcement coordination regulation). Further, this Guidance is issued pursuant to Executive Order 12250, reprinted at 42 U.S.C. 2000d, note; Executive Order 13166; and is consistent with the DOJ LEP Guidance.

III. Purpose and Application

The Title VI regulations prohibit both intentional discrimination and policies and practices that appear neutral but have a discriminatory effect. Thus, a recipient entity's policies or practices regarding the provision of benefits and services to LEP persons need not be intentional to be discriminatory, but may constitute a violation of Title VI if they have an adverse effect on the ability of national origin minorities to meaningfully access programs and services. Accordingly, it is useful for recipient entities to examine their policies and practices to determine whether they adversely affect LEP persons. This policy guidance provides a brief analytical framework consistent with the governing Title VI compliance standards set out in the DOJ LEP

Guidance to assist recipient/covered entities in conducting such assessments.

IV. Compliance and Enforcement

A four-factor analysis is recommended for compliance. Elements of an effective language assistance plan to consider are identification of LEP individuals who need language assistance, available language assistance options, training staff, providing notice to LEP persons, and monitoring effectiveness and need for modifications. It should consist of a determination of the number or proportion of eligible individuals with LEP who might be excluded from a program absent efforts to remove language barriers, their frequency of contact with the program, the nature and importance of the program (is it vital to your existence?) and the resources available. Once it is established that a need exists, one or both of two types of language assistance may be appropriate. Oral language interpretation and/or written material translation may be selected as necessary. These factors, plan elements, and their related compliance standards are discussed in detail in related guidance documents issued by other federal agencies. NSF recipients jointly funded by other federal agencies may rely upon guidance issued by those agencies.

Recipient entities have considerable flexibility in determining how to comply with their legal obligation in the LEP setting and are not required to use the suggested methods and options listed. However, recipient entities must establish and implement policies and procedures for providing language assistance sufficient to fulfill their Title VI responsibilities and provide LEP persons with meaningful access to services. NSF's regulations implementing Title VI contain compliance and enforcement provisions to ensure that a recipient's policies and practices overcome barriers resulting from language differences that would deny LEP persons an equal opportunity to participate in and access to programs, services and benefits offered by NSF. *See* 45 CFR, Part 611. We will ensure that our recipient entities fulfill their responsibilities to LEP persons through the procedures provided for in the Title VI regulations.

Executive Order 13166 requires that each federal department or agency extending federal financial assistance subject to Title VI issue separate guidance implementing uniform Title VI compliance standards with respect to LEP persons. Where recipients of federal financial assistance from NSF also receive assistance from one or more other federal departments or agencies, there is no obligation to conduct and document separate but identical analyses and language assistance plans for NSF. NSF, in discharging its compliance and enforcement obligations under Title VI, looks to analyses performed and plans developed in response to similar detailed LEP guidance issued by other federal agencies. Recipients may rely upon guidance issued by those agencies.

In determining a recipient entity's compliance with Title VI, NSF's primary concern is to ensure that the entity's policies and procedures overcome barriers resulting from language differences that would deny LEP persons a meaningful opportunity to participate in and access programs, services and benefits. A recipient entity's appropriate use of the methods and options discussed in this policy guidance is viewed by NSF as evidence of that entity's willingness to comply voluntarily with its Title VI obligations.

V. English-Only Provision

State and local laws may provide additional obligations to serve LEP individuals, but such laws cannot compel recipients of federal financial assistance to violate Title VI. For instance, given our constitutional structure, state or local ''English-only'' laws do not relieve an entity that receives federal funding from its responsibilities under federal anti-discrimination laws. Entities in states and localities with ''English-only'' laws are certainly not required to accept federal funding—but if they do, they have to comply with Title VI, including its prohibition against national origin discrimination by recipients of federal assistance. Failing to make federally assisted programs and activities accessible to individuals who are LEP, in certain circumstances, violates Title VI.

If you have any questions related to this policy, please contact the NSF Office of Equal Opportunity Programs.

[FR Doc. 02–5616 Filed 3–8–02; 8:45 am]

BILLING CODE 7555–01–P

NUCLEAR REGULATORY COMMISSION

Advisory Committee on Nuclear Waste; Notice of Meeting

The Advisory Committee on Nuclear Waste (ACNW) will hold its 133rd meeting on March 19–21, 2002, at 11545 Rockville Pike, Rockville, Maryland, Room T–2B3.

The entire meeting will be open to public attendance.

The schedule for this meeting is as follows:

Tuesday, March 19, 2002

A. *8:30–9:40 a.m.: Opening Statement/Planning and Procedures* (Open)—The Chairman will open the meeting with brief opening remarks. The Committee will then review items under consideration at this meeting and consider topics proposed for future ACNW meetings.

B. *10–12:30 p.m.: Update on DOE Performance Assessment Program* (Open)—The Committee will hear a presentation from DOE on its recent performance assessment program activities for the proposed repository at Yucca Mountain, NV.

C. *2–3:30 p.m.: Annual Research Report to the Commission* (Open)—The Committee will finalize its annual research report to the Commission.

D. *3:45–6 p.m.: Preparation for Meeting with the NRC Commissioners* (Open)—The next meeting with the NRC Commissioners is scheduled to be held at 9:30 a.m. in the Commissioners' Conference Room, One White Flint North on March 20, 2002. The Committee will review its proposed presentations.

Wednesday, March 20, 2002

E. *8:30–8:35 a.m.: Opening Remarks by the ACNW Chairman* (Open)—The ACNW Chairman will make opening remarks regarding the conduct of the meeting.

F. *8:35–9:10 a.m.: Discussion of Topics for Meeting with the NRC Commissioners* (Open)—The Committee will finalize preparations and discuss topics scheduled for the ACNW meeting with the NRC Commissioners.

G. *9:30–11:30 a.m.: Meeting with the NRC Commissioners* (Open)—The Committee will meet with the NRC Commissioners in the Commissioners' Conference Room, One White Flint North, to discuss:

- Sufficiency Review
- Total Systems Performance Assessment for Site Recommendation
- Key Technical Issues
- Review of NRC-Sponsored Research

H. *1:00–2:45 p.m.: High-Level Waste Performance Assessment Sensitivity Studies* (Open)—The staff will provide an update on its sensitivity studies related to HLW performance assessment analyses for the proposed repository at Yucca Mountain, NV.

I. *3–6 p.m.: Preparation of ACNW Reports* (Open)—The Committee will discuss proposed reports on the following topics:

- ACNW 2002 Action Plan
- Update on Igenous Activity including PA Analyses
- HLW Performance Assessment Sensitivity Studies
- Annual Research Report to the Commission

Thursday, March 21, 2002

J. *8:30–8:35 a.m.: Opening Remarks by the ACNW Chairman* (Open)—The ACNW Chairman will make opening remarks regarding the conduct of the meeting.

K. *8:35–12 Noon: Yucca Mountain Review Plan, Revision 2* (Open)—The Committee will hear presentations by and hold discussions with representatives of the NRC staff regarding the Yucca Mountain Review Plan, Revision 2.

L. *1–4 p.m.: Preparation of ACNW Reports* (Open)—The Committee will continue its discussion of proposed ACNW reports.

M. *4–4:15 p.m.: Miscellaneous* (Open)—The Committee will discuss matters related to the conduct of Committee activities and matters and specific issues that were not completed during previous meetings, as time and availability of information permit.

Procedures for the conduct of and participation in ACNW meetings were published in the **Federal Register** on October 3, 2001 (66 FR 50461). In accordance with these procedures, oral or written statements may be presented by members of the public, electronic recordings will be permitted only during those portions of the meeting that are open to the public, and questions may be asked only by members of the Committee, its consultants, and staff. Persons desiring to make oral statements should notify Mr. Howard J. Larson, ACNW (Telephone 301/415–6805), between 8 a.m. and 4 p.m. EST, as far in advance as practicable so that appropriate arrangements can be made to schedule the necessary time during the meeting for such statements. Use of still, motion picture, and television cameras during this meeting will be limited to selected portions of the meeting as determined by the ACNW Chairman. Information regarding the time to be set aside for taking pictures may be obtained by contacting the ACNW office, prior to the meeting. In view of the possibility that the schedule for ACNW meetings may be adjusted by the Chairman as necessary to facilitate the conduct of the meeting, persons planning to attend should notify Mr. Howard J. Larson as to their particular needs.

Further information regarding topics to be discussed, whether the meeting has been canceled or rescheduled, the Chairman's ruling on requests for the opportunity to present oral statements and the time allotted therefore can be obtained by contacting Mr. Howard J. Larson.

ACNW meeting notices, meeting transcripts, and letter reports are now available for downloading or viewing on the internet at *http://www.nrc.gov/ACRSACNW.*

Videoteleconferencing service is available for observing open sessions of ACNW meetings. Those wishing to use this service for observing ACNW meetings should contact Mr. Theron Brown, ACNW Audiovisual Technician (301/415–8066), between 7:30 a.m. and 3:45 p.m. EST at least 10 days before the meeting to ensure the availability of this service. Individuals or organizations requesting this service will be responsible for telephone line charges and for providing the equipment and facilities that they use to establish the videoteleconferencing link. The availability of videoteleconferencing services is not guaranteed.

Dated: March 5, 2002.

Andrew L. Bates,

Advisory Committee Management Officer.

[FR Doc. 02–5764 Filed 3–8–02; 8:45 am]

BILLING CODE 7590–01–P

RAILROAD RETIREMENT BOARD

Agency Forms Submitted for OMB Review

SUMMARY: In accordance with the Paperwork Reduction Act of 1995 (44 U.S.C. chapter 35), the Railroad Retirement Board (RRB) has submitted the following proposal(s) for the collection of information to the Office of Management and Budget for review and approval.

Summary of Proposal(s)

(1) *Collection title:* Railroad Separation Allowance or Severance Pay Report.

(2) *Form(s) submitted:* BA–9.

(3) *OMB Number:* 3220–0173.

(4) *Expiration date of current OMB clearance:* 4/30/2002.

(5) *Type of request:* Extension of a currently approved collection.

(6) *Respondents:* Business or other for-profit.

(7) *Estimated annual number of respondents:* 18.

(8) *Total annual responses:* 1,009.

(9) *Total annual reporting hours:* 1,262.

(10) *Collection description:* Section 6 of the Railroad Retirement Act provides for a lump-sum payment to an employee or the employee's survivor equal to the Tier II taxes paid by the employee on a separation allowance or severance payment for which the employee did not receive credits towards retirement. The collection obtains information concerning the separation allowances and severance payments paid from railroad employers.

FOR FURTHER INFORMATION CONTACT: Copies of the forms and supporting documents can be obtained from Chuck Mierzwa, the agency clearance officer (312–751–3363). Comments regarding the information collection should be addressed to Ronald J. Hodapp, Railroad Retirement Board, 844 North Rush Street, Chicago, Illinois, 60611–2092 and to the OMB Desk Officer for the RRB, at the Office of Management and Budget, Room 10230, New Executive Office Building, Washington, DC 20503.

Chuck Mierzwa,

Clearance Officer.

[FR Doc. 02–5702 Filed 3–8–02; 8:45 am]

BILLING CODE 7905–01–M

RAILROAD RETIREMENT BOARD

Sunshine Act Meeting

Notice is hereby given that the Railroad Retirement Board will hold a meeting on March 20, 2002, 10 a.m., at the Board's meeting room on the 8th floor of its headquarters building, 844 North Rush Street, Chicago, Illinois, 60611. The agenda for this meeting follows:

Portion Open to the Public

(1) Briefing from the Executive Committee on implementation of the Railroad Retirement and Survivors' Improvement Act of 2001

Portion Closed to the Public

(A) Board Members meet with the Executive Committee

The person to contact for more information is Beatrice Ezerski, Secretary to the Board, Phone No. 312–751–4920.

Dated: March 6, 2002.

Beatrice Ezerski,

Secretary to the Board.

[FR Doc. 02–5838 Filed 3–7–02; 10:02 am]

BILLING CODE 7905–01–M

SECURITIES AND EXCHANGE COMMISSION

[Release No. 34–45505; File No. SR–Amex–2002–13]

Self-Regulatory Organizations; Notice of Filing and Immediate Effectiveness of Proposed Rule Change by the American Stock Exchange LLC To Amend the Original Listing Criteria for Underlying Securities Contained in Amex Rule 915

March 5, 2002.

Pursuant to section 19(b)(1) of the Securities Exchange Act of 1934 (''Act''),[1] and Rule 19b–4 [2] thereunder, notice is hereby given that on March 1, 2002, the American Stock Exchange LLC (''Amex'' or ''Exchange'') filed with the Securities and Exchange Commission (the ''Commission'') the proposed rule change as described in Items I, II, and III below, which Items have been prepared by the Exchange. The Commission is publishing this notice to solicit comments on the proposed rule change from interested persons.

I. Self-Regulatory Organization's Statement of the Terms of Substance of the Proposed Rule Change

The Exchange proposes to provide an alternative original listing criteria for individual equity options that otherwise meet the standards in Commentary .01 to Rule 915 except for the requirement that the underlying security be at least $7.50.

The text of the proposed rule change appears below. New text is in italics; deletions are in brackets.

Rule 915. Criteria for Underlying Securities

(a) No Change.

(b) No Change.

Commentary .....

.01 The Board of Governors has established guidelines to be considered by the Exchange in evaluating potential underlying securities for Exchange option transactions. Absent exceptional circumstances with respect to items 1, 2, 3 or 4 listed below, at the time the Exchange selects an underlying security for Exchange options transactions, the following guidelines with respect to the issuer shall be met:

1. There are a minimum of 7,000,000 shares of the underlying security which are owned by persons other than those required to report their security holdings under Section 16(a) of the Securities Exchange Act of 1934.

2. There are a minimum of 2,000 holders of the underlying security.

3. Trading volume (in all markets in which the underlying security is traded) has been at least 2,400,000 shares in the preceding twelve months.

4. *Either (i)* [T]*t*he market price per share of the underlying security has been at least $7.50 for the majority of business days during the three calendar months preceding the date of selection, as measured by the lowest closing price reported in any market in which the underlying security traded on each of the subject days *or (ii)(a) the underlying security meets the guidelines for continued listing in Rule 916; (b) options on such underlying security are traded on at least one other registered national securities exchange; and (c) the average daily trading volume for such options over the last three (3) calendar months preceding the date of selection has been at least 5,000 contracts*.

5. The issuer is in compliance with any applicable requirements of the Securities Exchange Act of 1934.

II. Self-Regulatory Organization's Statement of the Purpose of, and Statutory Basis for, the Proposed Rule Change

In its filing with the Commission, the Exchange included statements concerning the purpose of and basis for the proposed rule change and discussed any comments it received on the proposed rule change. The text of these statements may be examined at the places specified in Item IV below. The Exchange has prepared summaries, set forth in sections A, B, and C below, of the most significant aspects of such statements.

A. Self-Regulatory Organization's Statement of the Purpose of, and Statutory Basis for, the Proposed Rule Change

(1) Purpose

Commentary. 01 to Amex Rule 915 sets forth the guidelines that an underlying individual equity security must meet before the Exchange may initially list options on that security. The Exchange states that these guidelines or requirements are uniform among four (4) out of the five (5) options exchanges. The exception is the International Securities Exchange LLC (''ISE''), because of recent Commission approval that eliminated the $7.50 standard for an underlying security when such option is otherwise listed and traded on another options exchange and has an average daily trading volume (''ADTV'') over the last three (3) calendar months of at least 5,000 contracts.[3]

The Exchange notes that its requirements for listing additional series of an existing listed option (the ''maintenance listing standards'') are less stringent. In particular, additional series may be added pursuant to Commentary .02 to Rule 916 if the underlying security is at least $3 in the primary market. The Exchange believes that this less stringent maintenance listing standard is permitted, in part, because the Exchange's other guidelines assure that options would be listed and traded on securities of companies that are financially sound and subject to adequate minimum standards. Therefore, according to the Exchange, the continued application of the Exchange's other guidelines provide that: (1) The underlying security consists of a large number of outstanding shares held by non-affiliates of the issuer; (2) the underlying security is actively-traded; (3) there are a large number of holders of the underlying security; and (4) the underlying security continues to be listed on a national securities exchange or traded through the facilities of a national securities association.

The Exchange believes that although the continued listing requirements are generally uniform among the options exchanges, with the exception of the ISE, the application of these standards in the current market environment have had an anticompetitive effect. Specifically, the Exchange states that on several occasions during the past year, it was unable to list options classes because the price of the underlying security had fallen below the initial listing requirement since the time such options were first listed on another exchange. Because the underlying security would continue to meet the lower maintenance listing standards, the other options exchange(s) may continue to trade such options—and list additional series—while the Amex may not list any options on such underlying security.

To address this situation, the Exchange proposes an alternative original listing requirement applicable to the underlying security's price during the three calendar months preceding an options listing. Specifically, Commentary .01 to Amex Rule 915 currently provides that the market price per share of the underlying security must have been at least $7.50 for the majority of business days during the

[1] 15 U.S.C. 78s(b)(1).

[2] 17 CFR 240.19b–4.

[3] *See* Securities Exchange Act Release No. 45220 (December 31, 2002), 67 FR 760 January 7, 2002) (SR–ISE–2001–33).

three calendar months preceding the date of selection for listing. The Exchange proposes to amend Commentary .01 to provide that, for underlying securities that satisfy all of the initial listing requirements other than the $7.50 per share price requirement, the Exchange would be permitted to list options on the securities so long as: (1) The underlying security meets the guidelines for continued approval contained in Amex Rule 916; (2) options on such underlying security are traded on at least one other registered national securities exchange; and (3) the ADTV for such options over the last three calendar months preceding the date of selection has been at least 5,000 contracts.

The Exchange believes that this proposal is narrowly drafted to address the circumstances where an actively-traded options class is currently ineligible for listing on the Amex while at the same time, such option is trading on another options exchange. The Exchange notes that when an underlying security meets the maintenance listing standards and at least one other exchange trades options on the underlying security, the options already are available to the investing public. Therefore, the Exchange notes that the current proposal would not introduce any additional listed options classes.

The Exchange also believes the proposed alternative original listing criteria's limitation to options that are actively-traded (*i.e.*, options with an ADTV of at least 5,000 contracts over the least three calendar months) should serve to allay any concerns regarding the listing of options that may be inappropriate. Therefore, the Exchange maintains that the proposed alternative listing standard would be limited to those options with active trading, indicating that there is widespread investor interest. Because these options are actively-traded in other markets, the Exchange further believes that there would be no investor protection concerns with listing such options on the Exchange. In addition, the Exchange believes that listing these options on the Amex would enhance competition and benefit investors.

(2) Statutory Basis

The Exchange believes that the proposed rule change is consistent with section 6(b) of the Act [4] in general and furthers the objectives of section 6(b)(5) [5] in particular in that an exchange have rules that are designed to prevent fraudulent and manipulative acts and practices, to promote just and equitable principles of trade, and, in general, to protect investors and the public interest.

B. Self-Regulatory Organization's Statement on Burden on Competition

The Exchange does not believe that the proposed rule change will impose any burden on competition.

C. Self-Regulatory Organization's Statement on Comments on the Proposed Rule Change Received From Members, Participants, or Others

No written comments were solicited or received with respect to the proposed rule change.

III. Date of Effectiveness of the Proposed Rule Change and Timing for Commission Action

The foregoing rule change has become effective pursuant to section 19(b)(3)(A) of the Act [6] and paragraph (f)(6) of Rule 19b–4 [7] thereunder because it does not: (i) Significantly affect the protection of investors or the public interest; (ii) impose any significant burden on competition; (iii) become operative for 30 days from the date on which it was filed, or such shorter time as the Commission may designate; and the Exchange has given the Commission written notice of its intention to file the proposed rule change at least five business days prior to filing. At any time within 60 days of the filing of such proposed rule change, the Commission may summarily abrogate such rule change if it appears to the Commission that such action is necessary or appropriate in the public interest, for the protection of investors, or otherwise in furtherance of the purposes of the Act.

The Commission notes that under Rule 19b–4(f)(6)(iii), the proposal does not become operative for 30 days after the date of its filing, or such shorter time as the Commission may designate if consistent with the protection of investors and the public interest. The Exchange has requested that the Commission waive the 30-day operative date. The Exchange contends that acceleration of the operative date is consistent with the protection of investors and the public interest because the language of this proposed rule is substantially similar to rule language that was put out for notice and comment when ISE submitted its proposed rule change. For this reason, consistent with section 19(b)(2) of the Act,[8] the Commission finds good cause to waive the 30-day operative period.[9]

IV. Solicitation of Comments

Interested persons are invited to submit written data, views and arguments concerning the foregoing, including whether the proposed rule change is consistent with the Act. Persons making written submissions should file six copies thereof with the Secretary, Securities and Exchange Commission, 450 Fifth Street, NW, Washington, DC 20549–0609. Copies of the submission, all subsequent amendments, all written statements with respect to the proposed rule change that are filed with the Commission, and all written communications relating to the proposed rule change between the Commission and any person, other than those that may be withheld from the public in accordance with the provisions of 5 U.S.C. 552, will be available for inspection and copying in the Commission's Public Reference Room. Copies of such filing will also be available for inspection and copying at the principal office of the Amex. All submissions should refer to File No. SR–Amex–2002–13 and should be submitted by April 1, 2002.

For the Commission, by the Division of Market Regulation, pursuant to delegated authority.[10]

Jill M. Peterson,

Assistant Secretary.

[FR Doc. 02–5815 Filed 3–8–02; 8:45 am]

BILLING CODE 8010–01–P

[4] 15 U.S.C. 78f(b).

[5] 15 U.S.C. 78f(b)(5).

[6] 15 U.S.C. 78s(b)(3)(A).

[7] 17 CFR 240.19b–4(f)(6).

[8] 15 U.S.C. 78s(b)(2).

[9] For purposes only of accelerating the operative date of this proposal, the Commission has considered the proposed rule's impact on efficiency, competition, and capital formation. 15 U.S.C. 78c(f).

[10] 17 CFR 200.30–3(a)(12).

SECURITIES AND EXCHANGE COMMISSION

[Release No. 34–45501; File No. SR–NASD–2002–28]

Self-Regulatory Organizations; Notice of Filing of Proposed Rule Change by the National Association of Securities Dealers, Inc. Relating to Fees Applicable to the NASD Alternative Display Facility

March 4, 2002.

Pursuant to Section 19(b)(1) of the Securities Exchange Act of 1934 (''Act''),[1] and Rule 19b–4 thereunder,[2] notice is hereby given that on February

[1] 15 U.S.C. 78s(b)(1).

[2] 17 CFR 240.19b-4.

20, 2002, the National Association of Securities Dealers, Inc. (''NASD'' or ''Association'') filed with the Securities and Exchange Commission (''SEC'' or ''Commission'') the proposed rule change as described in Items I, II and III below, which Items have been prepared by the NASD. The Commission is publishing this notice to solicit comments on the proposed rule change from interested persons.

I. Self-Regulatory Organization's Statement of the Terms of Substance of the Proposed Rule Change

The NASD is proposing to amend the 7000 Series of the NASD Rules to designate transaction and quotation related fees applicable to activities in the NASD's Alternative Display Facility (''ADF''). The text of the proposed rule change is set forth below. Proposed new language is in italics; proposed deletions are in brackets.[3]

* * * * *

7000. CHARGES FOR SERVICES AND EQUIPMENT

7010. System Services

(a)–(f)—deleted

[(g) Automated Confirmation Transaction Service] *(a) Trade Comparison and Reporting Service*

The following charges shall be paid by the participant for use of the [Automated Confirmation Transaction Service (ACT)] *Trade Comparison and Reporting Service (TRACS):*

Transaction Related Charges:

Comparison	[$0.0144] *$0.014*/side per 100 shares (minimum 400 shares; maximum 7,500 shares)
Automated Give-Up	*$0.029/side* [$0.01/side per 100 shares (minimum 400 shares; maximum 7,500 shares)]
Late Report—T+N	[$0.288]*$0.30*/side
Browse/query	$0.28[8]/query *
[Terminal fee	$57.00/month (ACT only terminals)]
[CTCI fee	$575.00/month]
[Nasdaq ACT	$300/month (full functionality) or $150/month (up to an average of twenty transactions per day each month) **
Trade Reporting	$.029/side (applicable only to reportable transaction not subject to trade comparison through *TRACS* [ACT])[***] **
[Risk Management Charges	$.035/side and $17.25/month per correspondent firm (maximum $10,000/month per correspondent firm)]
Corrective Transaction Charge	$0.25/ Cancel, Error, Inhibit, Kill, or 'No' portion of No/Was transaction, paid by reporting side; $0.25/ Break, Decline transaction, paid by each party;

* Each ACT query incurs the $0.288 fee; however, the first accept or decline processed for a transaction is free, to insure that no more than $0.288 is charged per comparison. Subsequent queries for more data on the same security will also be processed free. Any subsequent query on a different security will incur the $0.288 query charge.

[** For the purposes of this service only, a transaction is defined as an original trade entry, either on trade date or as-of transactions per month.]

[***]** The trade reporting service charge is applicable to those trades input into ACT for reporting purposes only, such as NSCC Qualified Special Representative reports and reports of internalized transactions.

(b) Quotation Updates

A member will be charged $0.01 per quotation update in the ADF quotation montage on those quotation updates that exceed three times the number of transactions executed or reported by the ADF member. A ''quotation update'' includes any change to the price or size of a displayed quotation. This charge will be determined on a monthly basis.

(h)–(j)—deleted

(k)—renumbered as (c)

(l)–(p)—deleted

7020. Equipment Related Charges

[(a)] The charge for using [Nasdaq] *ADF* terminal *software* [equipment] shall be [$120] *$275* per month for [the first] *each* terminal and *$550 per month for each server.* [$105 per month for each additional terminal where all terminals are located on the same premises.]

[(b) The charge for using interrogation or display devices which are not supplied by Nasdaq, but which utilize a Nasdaq supplied modem, shall be $75 per month for the first comparable device and $55 per month for each additional comparable device where all devices are located on the same premises.

(c) The charge for using interrogation or display devices and modems which are not supplied by Nasdaq shall be $50 per month for each such device located on the same premises.

(d) Nasdaq subscribers utilizing UNISYS or Tandem personal computers (PCs) authorized for emulation of the Harris standard terminal may elect to receive maintenance through Nasdaq at the rate of $55/PC/month.]

[7030. Special Options]

[Receive only Printer		$100/month.
Local Posting	Permits subscriber to use Nasdaq Level 3 terminals to enter quotations simultaneously into an internal computer system.	$10/month.
Dual Keyboard		$15/month.
Nasdaq Market Indexes	Permits vendor to process Nasdaq Level 1 and Last Sale data feeds solely for the purpose of supplying subscribers with real-time calculations of Nasdaq market indexes.	$500/month.
Non-Continuous Access to Nasdaq Level 1 and Last Sale Information.	Permits vendor to process and distribute Nasdaq Level 1 and Last Sale information to its subscribers on a non-continuous or query-response basis..	$.005/query.

[3] NASD requested that the Commission make a technical correction in proposed NASD Rule 7100, Minor Modifications in Charges, with regard to an improper reference to NASD ''Directors'' (rather than ''Governors''). Telephone conference between John S. Polise, Senior Special Counsel, Division of Market Regulation (''Division''), SEC, Christopher B. Stone, Attorney Advisor, Division, SEC, and Stephanie M. Dumont, Associate General Counsel, Office of General Counsel, NASD Regulation (February 28, 2002).

For a pilot period commencing April 3, 2000 and lasting until March 30, 2001. The fee for non continuous access to Nasdaq level one and last sale information will be reduced to $.005 per query.]

7040. Installation, Removal, [or] Relocation *or Maintenance*

ADF subscribers shall pay a minimum charge of $5,000 for installation costs associated with connecting to the ADF. Upon installation, removal, relocation *or maintenance* of terminal and related equipment, or combination thereof, the subscriber shall pay charges incurred by the Association or its subsidiaries *above the $5,000 minimum*, on behalf of the subscriber for the work being performed by the maintenance organization retained by Association or its subsidiaries. *Upon payment of $5,000 under this provision, members will receive a credit of up to $5,000 to be used toward their trade reporting and comparison charges imposed under Rule 7010(a).*

7050. Other Services

(a) Daily Reports to Newspapers

Reports for regular public release, such as a list of closing quotations or market summary information for newspaper publication, shall be produced in a format acceptable to most publishers without charge. Should such information be transmitted to another location at the request of any firm, a charge may be imposed for such services by the Association or a subsidiary.

(b) Other Requests for Data

The Association or a subsidiary may impose and collect compensatory charges for data [Nasdaq] supplied upon request, where there is no provision elsewhere in this Rule 7000 Series for charges for such service or sale.

(c) Correspondents

The charge for registration and display of a correspondent firm for a registered market maker shall be $3.50 per month for each correspondent displayed per security.

(d) Testing Services

(1) Subscribers that conduct tests of their computer-to-computer (CTCI) or digital interface (DIS/CHIPS) with the central processing facilities of *Alternative Display Facility* [The Nasdaq Stock Market, Inc. (NSMI)] shall pay the following charges:

$285/hour For CTCI/DIS/CHIPS testing between 9:00 a.m. and 5:00 p.m. Eastern Time on business days;

$333/hour For testing at all other times on business days, or on weekends and holidays.

(2) The foregoing fees shall not apply to testing occasioned by:

(A) new or enhanced services and/or software provided by *ADF* [NSMI] or

(B) modifications to software and/or services initiated by *ADF* [NSMI] in response to a contingency.

7060. Partial Month Charges—No Change

7070. *Reserved* [Subscriber Deposits]

[New and existing subscribers to Level 2/3 or Nasdaq Workstation service shall be subject to the following deposit charges per unit:

(a) New subscriber:

(1) estimated telecommunications provider charges for network infrastructure, connection and testing;

(2) two (2) months circuit charges; and

(3) estimated telecommunications provider disconnect charges.

(b) Existing subscribers subject to subscriber deposits include those that have been placed on the termination list two or more times within a two year period; those that have paid for services with one or more NSF checks; and those that have had service disconnected for non-payment but have not had equipment removed:

(1) two (2) months circuit charges; and

(2) estimated telecommunications provider disconnect charges.]

7080. Late Fees

(a) All charges imposed by *the NASD* [The Nasdaq Stock Market, Inc.] that are past due 45 days or more will be subject to a late fee computed by taking the summation of one and one-half percent (1½%) of the amount past due for the first month plus one and one-half percent (1½%) of the amount past due for any month thereafter, compounded by late fees assessed for previous months.

(b) No Change.

[7090. Mutual Fund Quotation Service]

[(a) Funds included in the Mutual Fund Quotation Service (''MFQS'') shall be assessed an annual fee of $400 per fund authorized for the News Media Lists and $275 per fund authorized for the Supplemental List. Funds authorized during the course of an annual billing period shall receive a proration of these fees but no credit or refund shall accrue to funds terminated during an annual billing period. In addition, there shall be a one-time application processing fee of $250 for each new fund authorized.

(b) Funds included in the MFQS and pricing agents designated by such funds (''Subscriber''), shall be assessed a monthly fee of $75 for each logon identification obtained by the Subscriber. A Subscriber may use a logon identification to transmit to Nasdaq pricing and other information that the Subscriber agrees to provide to Nasdaq.]

7100. Minor Modifications in Charges

(a) To compensate for minor variations in annual net income, the Board of Directors of The [Nasdaq Stock Market, Inc.] *NASD* may increase or decrease the total charges in this Schedule by 10% from the base charges as adopted on [August 28, 1979] *insert adoption date* upon filing such change with the Commission pursuant to Section 19(b)(3) of the Act.

(b) No Change.

* * * * *

II. Self-Regulatory Organization's Statement of the Purpose of, and Statutory Basis for, the Proposed Rule Change

In its filing with the Commission, the NASD included statements concerning the purpose of and the basis for the proposed rule change and discussed any comments it received on the proposed rule change. The text of these statements may be examined at the places specified in Item IV below. The NASD has prepared summaries, set forth in Sections A, B and C below, of the most significant aspects of such statements.

A. Self-Regulatory Organization's Statement of the Purpose of, and Statutory Basis for, the Proposed Rule Change

1. Purpose

As described in detail in SR–NASD–2001–90,[4] the NASD intends to operate a trade reporting and comparison service as part of the ADF. The trade reporting service would collect trade reports for NASD registered market participants, as well as any NASD member required to report transactions occurring otherwise than on an exchange. The service would transmit the reports automatically to the respective Securities Information Processors (''SIPs''), if required, for dissemination to the public and the industry. This mechanism would operate similarly to the trade reporting functions of Nasdaq's Automated

[4] See Exchange Act Release No. 45156 (December 14, 2001), 67 FR 388 (January 3, 2002).

Confirmation Transactions Service (''ACT'').[5]

The ADF also will provide for trade comparison through the Trade Comparison and Reporting Service (''TRACS''). TRACS will (1) compare trade information entered by TRACS participants and submit ''locked-in'' trades to the Depository Trust Clearing Corporation (''DTCC'') for clearance and settlement; (2) transmit reports of the transactions automatically to the respective SIPs, if required, for dissemination to the public and the industry; and (3) provide participants with monitoring capabilities to facilitate participation in a ''locked-in'' trading environment.

In SR–NASD–2001–90, the NASD stated that the proposed fees or assessments related to the ADF would be provided in a separate rule filing. Accordingly, the NASD now is proposing amendments to the Rule 7000 Series to provide for the fees and/or assessments on quotation and transaction activities on the ADF. Specifically, the NASD is proposing fees similar to those currently imposed on transaction activities in ACT and therefore, many of the amendments to the rule text are the replacement of references to ''ACT'' with ''TRACS.'' The following are fees that will be charged relating to transactions on the ADF and are similar to those currently imposed on activities in ACT: Comparison—$0.014/side per 100 shares (minimum 400 shares; maximum 7,500 shares); Automated Give-Up—$0.029/side; Late Report—T+N—$0.30/side; Browse/query—$0.28/query[6]; Trade Reporting—$.029/side (applicable only to reportable transactions not subject to trade comparison through TRACS); and Corrective Transaction Charge—$0.25. The following transaction-related charges currently in Rule 7010(g) will be deleted: Terminal fee, CTCI fee, Nasdaq ACT and Risk Management Charges.

The NASD proposes to charge an ADF workstation fee of $275 per month for each ADF terminal software license and $550 per month for each ADF server license. The NASD proposes to charge members a minimum of $5,000 for installation costs associated with connecting to the ADF, and will require reimbursement from members for charges incurred by the NASD above $5,000 due to the installation, removal, relocation or maintenance of terminal and related equipment. However, market participants will receive a credit of up to $5,000 toward their trade reporting and comparison charges.

In addition, the NASD will charge for certain other services described in Rule 7050(b) (requests for data), Rule 7050(c) (registration and display of a correspondent firm for a registered market maker) and Rule 7050(d) (charges for subscribers that conduct tests of their computer-to-computer or digital interfaces). The NASD will not be offering modems, interrogation or display devices and therefore is proposing to delete Rule 7020(b) through (d).

The NASD is proposing to delete the following provisions that currently impose fees on members for access to different levels of data services or special options: Rule 7010(a) through (f), Rule 7010(h), Rule 7030 and Rule 7070. The NASD is proposing to delete Rule 7010(i) (fees relating to transaction execution services), Rule 7010(j) (position charge for members that quote on the OTC Bulletin Board), Rule 7010(o) (Nasdaq Application of OptiMark Service) and Rule 7090 (Mutual Fund Quotation Service). As noted in SR–NASD–2001–90, the ADF will not be providing any transaction execution services and will not provide quotation services related to OTC Bulletin Board securities or mutual funds.

The NASD will not be imposing Market Data Distributor or Vendor Annual Administrative Fees and, therefore, is proposing to delete Rule 7010(l). The NASD will not be providing compliance data packages, historical research and administrative reports and, therefore, is proposing to delete Rule 7010(n) and Rule 7010(p). Finally, NASD will not be providing an Automated Voice Response Service and therefore, is proposing to delete Rule 7010(m).

The proposed rule change also provides for several administrative provisions that are identical to current rules, including partial month charges (Rule 7060) and late charges for all fees that are past due 45 days or more (Rule 7080). The proposed rule change also permits the NASD to increase or decrease the total charges described in the Rule 7000 series by 10% upon filing such changes with the SEC (Rule 7100(a)). The proposed rule change retains current Rule 7100(b).

Finally, the NASD is proposing to charge a quotation update fee of $.01 per quotation update in the ADF quotation montage. This quotation update fee, however, will apply only to those quotation updates by the member in the ADF that exceed three times the number of transactions reported by the member through the ADF. This quotation update fee will be determined on a monthly basis. By imposing this fee only where the quotation updates significantly exceed the number of transactions reported, this fee structure will fairly impose costs on those members whose quotation activity creates system capacity demands, and therefore costs that are not covered by a trade reporting fee.

2. Statutory Basis

The NASD believes that the proposed rule change is consistent with the provisions of Section 15A(b)(6)[7] of the Act, which requires, among other things, that the Association's rules be designed to prevent fraudulent and manipulative acts and practices, to promote just and equitable principles of trade, and, in general, to protect investors and the public interest. The NASD believes that the proposed rule change will provide a cost effective and efficient mechanism to quote and report trades on the ADF. The proposed rule change is also consistent with Section 15A(b)(5) of the Act[8] in that it provides for the equitable allocation of reasonable dues, fees and other charges among members and issuers and other persons using any facility or system that the Association operates or controls. The NASD believes that this fee structure is a reasonable means for the NASD to recover the development costs of the ADF, as well as meet ongoing operating costs.

B. Self-Regulatory Organization's Statement on Burden on Competition

The NASD does not believe that the proposed rule change will result in any burden on competition that is not necessary or appropriate in furtherance of the purposes of the Act.

C. Self-Regulatory Organization's Statement on Comments on the Proposed Rule Change Received From Members, Participants, or Others

Written comments were neither solicited nor received.

III. Date of Effectiveness of the Proposed Rule Change and Timing for Commission Action

Within 35 days of the date of publication of this notice in the **Federal**

[5] The NASD service would not perform risk management services that are provided by Nasdaq's ACT.

[6] Each TRACS query incurs the $0.28 fee; however, the first accept or decline processed for a transaction is free, such that no more than $0.28 is charged per comparison. Subsequent queries for more data on the same security also will be processed free. Any subsequent query on a different security will incur the $0.28 query charge.

[7] 15 U.S.C. 78o–3(b)(6).

[8] 15 U.S.C. 78o–3(b)(5).

Register or within such longer period (i) as the Commission may designate up to 90 days of such date if it finds such longer period to be appropriate and publishes its reasons for so finding, or (ii) as to which the NASD consents, the Commission will:

A. by order approve such proposed rule change, or

B. institute proceedings to determine whether the proposed rule change should be disapproved.

IV. Solicitation of Comments

Interested persons are invited to submit written data, views, and arguments concerning the foregoing, including whether the proposed rule change is consistent with the Act. Persons making written submissions should file six copies thereof with the Secretary, Securities and Exchange Commission, 450 Fifth Street, NW, Washington, DC 20549–0609. Copies of the submission, all subsequent amendments, all written statements with respect to the proposed rule change that are filed with the Commission, and all written communications relating to the proposed rule change between the Commission and any person, other than those that may be withheld from the public in accordance with the provisions of 5 U.S.C. 552, will be available for inspection and copying in the Commission's Public Reference Room. Copies of such filing will also be available for inspection and copying at the principal office of the NASD. All submissions should refer to File No. SR–NASD–2002–28 and should be submitted by April 1, 2002.

For the Commission, by the Division of Market Regulation, pursuant to delegated authority.[9]

Jill M. Peterson,

Assistant Secretary.

[FR Doc. 02–5683 Filed 3–8–02; 8:45 am]

BILLING CODE 8010–01–P

[9] 17 CFR 200.30–3(a)(12).

SECURITIES AND EXCHANGE COMMISSION

[Release No. 34–45500; File No. SR–NASD–00–82]

Self-Regulatory Organizations; Notice of Filing of Amendment Nos. 1, 2, 3, and 4 to a Proposed Rule Change by the National Association of Securities Dealers, Inc. Relating to the Assessment of Fees for Unit Investment Trusts Included in Nasdaq's Mutual Fund Quotation Service

March 4, 2002.

Pursuant to section 19(b)(1) of the Securities Exchange Act of 1934 (''Act''),[1] and Rule 19b-4 thereunder,[2] notice is hereby given that the National Association of Securities Dealers, Inc. (''NASD'' or ''Association''), through its subsidiary, the Nasdaq Stock Market, Inc. (''Nasdaq'') filed with the Securities and Exchange Commission (''SEC'' or ''Commission'') Amendment Nos. 1, 2, 3, and 4 to the proposed rule change as described in Items I, II, and III below, which Items have been prepared by Nasdaq. The proposed rule change was published for comment in the **Federal Register** on February 20, 2001.[3] The Commission received one comment letter regarding the proposed rule change.[4] On June 18, 2001, Nasdaq filed Amendment No. 1 to the proposal.[5] On June 26, 2001, Nasdaq filed Amendment No. 2 to the proposal.[6] On July 2, 2001, Nasdaq filed Amendment No. 3 to the proposal.[7] On February 11, 2002, Nasdaq filed Amendment No. 4 to the proposal.[8] The Commission is publishing this notice to solicit comments on the proposed rule change, as amended, from interested persons.

[1] 15 U.S.C. 78s(b)(1).

[2] 17 CFR 240.19b–4.

[3] *See* Securities Exchange Act Release No. 43915 (February 1, 2001), 66 FR 10926 (''February 2001 Release'').

[4] *See* letter from Barry E. Simmons, Associate Counsel, Investment Company Institute (''ICI''), to Jonathan G. Katz, Secretary, Commission, dated March 13, 2001 (''ICI Letter'').

[5] *See* letter from Edward S. Knight, Executive Vice President and General Counsel, Nasdaq, to Katherine A. England, Assistant Director, Division of Market Regulation (''Division''), Commission, dated June 15, 2001 (''Amendment No. 1''). Amendment No. 1 revises the proposal to: (1) Establish a $150 fee for replacement Unit Investment Trusts (''UITs''); and (2) respond to the ICI's comments by adopting the ICI's suggested requirements for a replacement UIT.

[6] *See* letter from Edward S. Knight , Vice President and General Counsel, Nasdaq, to Katherine A. England, Assistant Director, Division, Commission, dated June 25, 2001 (''Amendment No. 2''). The rule test provided in Amendment No. 1 indicated the way that Amendment No. 1 revised the text of current NASD Rule 7090 rather than the way that Amendment No. 1 revised the text of NASD Rule 7090 as amended by the original proposal. Amendment No. 2 replaces the text of NASD Rule 7090 proposed in Amendment No. 1 with text designed to indicate the way that Amendment No. 1 revises Nasdaq's original proposal rather than the existing text of NASD Rule 7090.

[7] *See* letter from Mary M. Dunbar, Vice President, Office of the General Counsel, Nasdaq, to Katherine A. England, Assistant Director, Division, Commission, dated June 29, 2001 (''Amendment No. 3''). Amendment No. 3 replaces the text of NASD Rule 7090 provided in Amendment No. 2 with rule text that is designed to indicate more clearly the way that Amendment No. 1 revises the text of NASD Rule 7090 was amended by the original proposal.

[8] *See* letter from Jeffrey S. Davis, Associate General Counsel, Nasdaq, to Katherine A. England, Assistant Director, Division, Commission, dated February 11, 2002 (''Amendment No. 4''). Amendment No. 4 provides a more detailed explanation of the need for the proposed fees. Specifically, among other things, Amendment No. 4 states that the application fee supports the personnel who are required to review, record, and enter each fund into the Mutual Fund Quotation Service (''MFQS''). In addition, Amendment No. 4 states that the annual fee for the News Media Lists and the Supplemental List support the NASD's continuous monitoring of funds' compliance with the standards for inclusion in the MFQS, for upgrading the technology used to collect and disseminate the MFQS, and for responding to the requests of users and subscribers for service enhancements. Amendment No. 4 also provides additional information concerning the $150 application fee for replacement UITs.

I. Self-Regulatory Organization's Statement of the Terms of Substance of the Proposed Rule Change

In the original proposal, which was published for comment in the February 2001 Release, Nasdaq proposed to amend NASD Rule 7090, ''Mutual Fund Quotation Service,'' to: (1) Revise NASD Rule 7090(a) to apply to UITs certain annual and application fees that currently apply to mutual funds; and (2) adopt NASD Rule 7090(b), which eliminated a one-time application fee if a UIT expires by its own terms during an annual billing period and is replaced within three months by a trust that is materially similar in share class and trust objective. The proposed changes to the original proposal, as published in the February 2001 Release, are below.

Proposed additions are italicized and proposed deletions are placed in [brackets].

* * * * *

7090. Mutual Fund Quotation Service

(a) No change.

(a) If a Unit Investment Trust expires by its own terms during an annual billing period and is replaced within three months by a trust that is materially similar in [share class and trust] *investment* objective, the replacing trust shall [not] be charged a one-time application fee *of $150.* [In addition, t]*T*he replacing trust shall not be

charged an annual fee if the expiring trust has already paid an annual fee for that annual billing period.

(c) No change.

* * * * *

II. Self-Regulatory Organization's Statement of the Purpose of, and Statutory Basis for, the Proposed Rule Change

In its filing with the Commission, Nasdaq included statements concerning the purpose of, and basis for, the proposed rule change and discussed any comments it received on the proposed rule change. The text of these statements may be examined at the places specified in Item IV below. Nasdaq has prepared summaries, set forth in Sections A, B, and C below, of the most significant aspects of such statements.

A. Self-Regulatory Organization's Statement of the Purpose of, and Statutory Basis for, the Proposed Rule Change

1. Purpose

NASD Rule 7090 sets forth the fees assessed for the inclusion of mutual funds in the MFQS. In its original proposal, Nasdaq proposed to: (1) Revise NASD Rule 7090(a) to apply to UITs certain annual and application fees that currently apply to mutual funds; [9] and (2) adopt NASD Rule 7090(b), which eliminated a one-time application fee for a replacing trust if a UIT expires by its own terms during an annual billing period and is replaced within three months by a trust that is materially similar in share class and trust objective. The original proposal was published for comment in the **Federal Register** on February 20, 2001.[10] The Commission received one comment letter regarding the proposal.[11]

The commenter supported Nasdaq's proposal to accommodate the manner in which UITs are offered, but recommended a technical change to the proposed rule to ensure that the fee assessment procedures for UITs operate appropriately. Specifically, the ICI recommended that Nasdaq eliminate the requirement in proposed NASD Rule 7090(b) that the replacement UIT be similar in ''share class'' to the replacing UIT because UITs do not issue shares, nor do they have different classes of shares. The ICI recommended that Nasdaq revise proposed NASD Rule 7090(b) to state that ''[i]f a UIT expires by its own terms during an annual billing period and is replaced within three months by a trust that has a materially similar investment objective, the replacing trust shall not be charged a one-time application fee.'' [12]

In Amendment No. 1, Nasdaq revised its proposal to: (1) adopt the commenter's suggested requirements for the definition of a ''materially similar'' replacement trust; and (2) provide that, instead of eliminating the one-time application fee for a replacing trust, the replacing UIT would be charged a one-time application fee of $150. Thus, NASD Rule 7090(b), as amended, provides that if a UIT expires by its own terms during an annual billing period and is replaced within three months by a trust that is materially similar in investment objective, the replacing trust shall be charged a one-time application fee of $150.

With regard to the $150 one-time application fee, Nasdaq states in Amendment No. 1 that after submitting its original proposal, Nasdaq received new information indicating that the number of UITs that would potentially qualify for the application fee waiver was substantially greater than first anticipated. Nasdaq states that, recognizing the finite character of UITs, Nasdaq had initially proposed to offer a full fee waiver although the full fee itself only partially offsets the costs Nasdaq incurs for processing each application. In light of the increased numbers of funds potentially eligible for the fee waiver, Nasdaq states in Amendment No. 1 that it is compelled to offer only a partial fee waiver, reducing the waiver by $100. Thus, Nasdaq proposes to impose a one-time application fee of $150 for replacement UITs, rather than Nasdaq's standard $250 fee.

In Amendment No. 4, Nasdaq provides additional reasons for assessing the proposed fees on UITs and discusses the need for the $150 application fee for replacement trusts. With regard to the $150 application fee, Nasdaq states after filing its original proposal, it discovered two pertinent facts: (1) That a significant number of UITs would qualify as replacement UITs; and (2) that, despite their similarity to the funds they replace, replacement UITs will require significant processing before entry into the MFQS. Nasdaq states that although it had hoped to waive the application for replacement funds entirely, it is economically constrained to offer only a $100 waiver. Nasdaq believes that the replacement fee constitutes an equitable allocation of fees among users of the service.

With regard to the need to assess fees for including UITs in the MFQS, Nasdaq states that the application fee supports the Fund Operations personnel who are required to review, record, and enter each fund into the MFQS system for subsequent dissemination to electronic or print subscribers. Nasdaq states that the annual fee for the News Media Lists and the Supplemental List support the NASD's continuous monitoring of funds' compliance with the standards for inclusion in the MFQS, and for responding to the requests of users and subscribers for service enhancements. Nasdaq notes that the NASD maintains a staff and dedicated technology to produce the MFQS, which provides transparency to investors and a valuable service to subscribers. Nasdaq believes that the application and annual fees have for many years been part of an equitable allocation of fees among users of the service because they are assessed to subscribers in direct proportion to their usage of the service.

2. Statutory Basis

Nasdaq believes that the proposed rule change is consistent with the provisions of sections 15A(b)(6) [13] and Section 11A [14] of the Act. Section 15A(b)(6) requires that the rules of a registered national securities association be designed to prevent fraudulent and manipulative acts and practices, to promote just and equitable principals of trade, to foster cooperation and coordination with persons engaged in regulating, clearing, settling, processing information with respect to, and facilitating transactions in securities, to remove impediments to and perfect the mechanism of a free and open market and a national market system, and, in general, to protect investors and the public interest; and are not designed to permit unfair discrimination between customers, issuers, brokers, or dealers. In Section 11A(a)(1)(C), Congress found that is in the public interest and appropriate for the protection of investors and the maintenance of fair and orderly markets to assure: (1) Economically efficient execution of securities transactions; (2) fair competition among brokers and dealers; (3) the availability to brokers, dealers and investors of information with respect to quotations and transactions in

[9] Specifically, the original proposal revised NASD Rule 7090(a) to provide that UITs included in the MFQS shall be assessed an annual fee of $400 per trust authorized for the News Media Lists and $275 per trust authorized for the Supplemental List. In addition, NASD Rule 7090(a) imposes a one-time application processing fee of $250 for each new trust authorized.

[10] *See* February 2001 Release, *supra* not 3.

[11] *See* ICI Letter, *supra* note 4.

[12] *See* ICI Letter, *supra* note 4.

[13] 15 U.S.C. 78o–3(b)(6).

[14] 15 U.S.C. 78k–1.

securities; (4) the practicability of brokers executing investors orders in the best market; and (5) an opportunity for investors orders to be executed without the participation of a dealer.

Nasdaq believes that the proposed rule change is consistent with the provisions of sections 15A(b)(6) and 11A(a)(1)(C) of the Act because the proposal protects investors and the public interest by promoting better processing of price information in UITs. Nasdaq believes that the proposed listing fees will encourage the listing of UITs, thereby providing greater pricing information for a broader base of investments for which there is significant investor interest. Nasdaq also believes that the proposed listing fees will enable Nasdaq to identify, screen and list bona fide UITs with a meaningful investor base and trading interest.

B. Self-Regulatory Organization's Statement on Burden on Competition

Nasdaq does not believe that the proposed rule change will result in any burden on competition.

C. Self-Regulatory Organization's Statement on Comments on the Proposed Rule Change Received From Members, Participants, or Others

Nasdaq has neither solicited nor received written comments on the proposed rule change.

III. Date of Effectiveness of the Proposed Rule Change and Timing for Commission Action

Within 35 days of the date of publication of this notice in the **Federal Register** or within such longer period (i) as the Commission may designate up to 90 days of such date if it finds such longer period to be appropriate and publishes its reasons for so finding or (ii) as to which the NASD consents, the Commission will:

(A) By order approve such proposed rule change, or

(B) Institute proceedings to determine whether the proposed rule change should be disapproved.

IV. Solicitation of Comments

Interested persons are invited to submit written data, views and arguments concerning Amendment Nos. 1, 2, 3, and 4, including whether the amendments are consistent with the Act. Persons making written submissions should file six copies thereof with the Secretary, Securities and Exchange Commission, 450 Fifth Street, NW., Washington, DC 20549–0609. Copies of the submission, all subsequent amendments, all written statements with respect to the proposed rule change that are filed with the Commission, and all written communications relating to the proposed rule change between the Commission and any person, other than those that may be withheld from the public in accordance with the provisions of 5 U.S.C. 552, will be available for inspection and copying in the Commission's Public Reference Room. Copies of such filing will also be available for inspection and copying at the principal office of the NASD.

All submissions should refer to File No. SR–NASD–00–82 and should be submitted by April 1, 2002.

For the Commission, by the Division of Market Regulation, pursuant to delegated authority.[15]

Jill M. Peterson,

Assistant Secretary.

[FR Doc. 02–5684 Filed 3–8–02; 8:45 am]

BILLING CODE 8010–01–P

SECURITIES AND EXCHANGE COMMISSION

[Release No. 34–45504 ; File No. SR–NASD–2002–30]

Self-Regulatory Organizations; Notice of Filing and Immediate Effectiveness of Proposed Rule Change By the National Association of Securities Dealers, Inc., To Extend the Pilot for the Operation of the Short Sale Rule in a Decimals Environment

March 5, 2002.

Pursuant to section 19(b)(1) of the Securities Exchange Act of 1934 (''Act''),[1] and Rule 19b–4 thereunder,[2] notice is hereby given that on March 1, 2002, the National Association of Securities Dealers, Inc. (''NASD'' or ''Association''), through its subsidiary, the Nasdaq Stock Market, Inc. (''Nasdaq''), filed with the Securities and Exchange Commission (''Commission'') the proposed rule change as described in Items I, II and III below, which Items have been prepared by Nasdaq. Nasdaq filed the proposal pursuant to section 19(b)(3)(A) of the Act,[3] and Rule 19b–4(f)(6)[4] thereunder, which renders the proposal effective upon filing with the Commission. The Commission is publishing this notice to solicit comments on the proposed rule change from interested persons.

I. Self-Regulatory Organization's Statement of the Terms of Substance of the Proposed Rule Change

Nasdaq proposes to extend through April 15, 2002, the penny ($0.01) legal short sale standard contained in NASD Interpretative Material 3350 (''IM–3350''). Without such an extension this standard would terminate on March 1, 2002. Nasdaq does not propose to make any substantive changes to the pilot; the only change is an extension of the pilot's expiration date through April 15, 2002. Nasdaq requests that the Commission waive both the 5-day notice and 30-day pre-operative requirements contained in Rule 19b–4(f)(6)(iii)[5] of the Act. If such waivers are granted by the Commission, Nasdaq will implement this rule change immediately.

II. Self-Regulatory Organization's Statement of the Purpose of, and Statutory Basis for, the Proposed Rule Change

In its filing with the Commission, Nasdaq included statements concerning the purpose of and basis for its proposal and discussed any comments it received regarding the proposal. The text of these statements may be examined at the places specified in Item IV below. Nasdaq has prepared summaries, set forth in Sections A, B and C below, of the most significant aspects of such statements.

A. Self-Regulatory Organization's Statement of the Purpose of, and Statutory Basis for, the Proposed Rule Change

1. Purpose

On March 2, 2001, the Commission approved, on a one-year pilot basis ending March 1, 2002,[6] Nasdaq's proposal to establish a $0.01 above the bid standard for legal short sales in Nasdaq National Market securities as part of the Decimals Implementation Plan for the Equities and Options Markets. Nasdaq now proposes to extend, through April 15, 2002, that pilot program. Extension until April 15th, will allow the termination date of the short sale pilot to coincide with the termination date of Nasdaq's decimal-related Manning customer limit order protection pilot and the termination date set by the Commission for all decimal-related pilot programs.[7] If

---

[15] 17 CFR 200.30–2(a)(12).

[1] 15 U.S.C. 78s(b)(1).

[2] 17 CFR 240.19b–4.

[3] 15 U.S.C. 78s(b)(3)(A).

[4] 17 CFR 240.19b–4(f)(6).

[5] 17 CFR 240.19b–4(f)(6)(iii).

[6] Securities Exchange Act Release No. 44030 (March 2, 2001), 66 FR 14235 (March 9, 2001).

[7] Nasdaq recently filed with the Commission to obtain permanent approval of the penny short sale rule. (*See* SR–NASD 2002–09). Please note that Nasdaq incorrectly stated in that filing that it had

approved, Nasdaq would continue during the pilot period to require NASD members seeking to effect ''legal'' short sales when the current best (inside) bid displayed by Nasdaq is lower that the previous bid, to execute those short sales at a price that is at least $0.01 above the current inside bid in that security. Nasdaq believes that continuation of this pilot standard appropriately takes into account the important investor protections provided by the short sale rule and the ongoing relationship of the valid short sale price amount to the minimum quotation increment of the Nasdaq market (currently also $0.01).

2. Statutory Basis

Nasdaq believes that the proposed rule change is consistent with the provisions of section 15A(b)(6) of the Act[8] in that it is designed to: (1) Promote just and equitable principles of trade; (2) foster cooperation and coordination with persons engaged in regulating, clearing, settling, processing information with respect to and facilitating transactions in securities; (3) perfect the mechanism of a free and open market and a national market system; and (4) protect investors and the public interest.

B. Self-Regulatory Organization's Statement on Burden on Competition

Nasdaq does not believe that the proposed rule change will impose any inappropriate burden on competition.

C. Self-Regulatory Organization's Statement on Comments on the Proposed Rule Change Received From Members, Participants or Others

Written comments were neither solicited nor received.

III. Date of Effectiveness of the Proposed Rule Change and Timing for Commission Action

Because the foregoing proposed rule change does not:

(i) Significantly affect the protection of investors or the public interest;

(ii) Impose any significant burden on competition; and

(iii) Become operative for 30 days from the date on which it was filed, or such shorter time as the Commission may designate if consistent with the protection of investors and the public interest, it has become effective pursuant to section 19(b)(3)(A) of the Act[9] and Rule 19b-4(f)(6) thereunder.[10]

At any time within 60 days of the filing of the proposed rule change, the Commission may summarily abrogate such rule change if it appears to the Commission that such action is necessary or appropriate in the public interest, for the protection of investors, or otherwise in furtherance of the purposes of the Act.

Nasdaq has requested the Commission waive both the 5-day notice and 30-day pre-operative requirements contained in Rule 19b–4(f)(6)[11] and has requested that the Commission accelerate the operative date. The Commission finds good cause to waive both the 5-day notice and 30-day pre-operative requirements because the extension of the pilot is consistent with the protection of investors and the public interest. Acceleration of the operative date will allow the pilot to continue uninterrupted through April 15, 2002, the deadline for which self-regulatory organizations must file proposed rule changes to set the minimum price variation for quoting in a decimals environment. For these reasons, the Commission finds good cause to waive both the 5-day notice and 30-day pre-operative requirements.[12]

IV. Solicitation of Comments

Interested persons are invited to submit written data, views, and arguments concerning the foregoing, including whether the proposal is consistent with the Act. Persons making written submissions should file six copies thereof with the Secretary, Securities and Exchange Commission, 450 Fifth Street, NW., Washington, DC 20549–0609. Copies of the submission, all subsequent amendments, all written statements with respect to the proposed rule change that are filed with the Commission, and all written communications relating to the proposed rule change between the Commission and any person, other than those that may be withheld from the public in accordance with the provisions of 5 U.S.C. 552, will be available for inspection and copying in the Commission's Public Reference Room. Copies of such filing will also be available for inspection and copying at the principal office of Nasdaq. All submissions should refer to file number SR–NASD–2002–30 and should be submitted by April 1, 2002.

For the Commission, by the Division of Market Regulation, pursuant to delegated authority.[13]

Jill M. Peterson,

Assistant Secretary.

[FR Doc. 02–5780 Filed 3–8–02; 8:45 am]

BILLING CODE 8010–01–U

filed to extend the short sale pilot until April 15, 2002.

[8] 15 U.S.C. 78o–3(b)(6).

[9] 15 U.S.C. 78s(b)(3)(A).

[10] 17 CFR 240.19b–4(f)(6).

[11] *Id.*

[12] For purposes only of accelerating the operative date of this proposal, the Commission has considered the proposed rule's impact on efficiency, competition, and capital formation. 15 U.S.C. 78c(f).

[13] 17 CFR 200.30–3(a)(12).

SECURITIES AND EXCHANGE COMMISSION

[Release No. 34–45506; File No. SR–NASD–2002–18]

Self Regulatory Organizations; Notice of Filing of a Proposed Rule Change by the National Association of Securities Dealers, Inc., Relating to Member Transaction Fees

March 5, 2002.

Pursuant to section 19(b)(1) of the Securities Exchange Act of 1934 (''Act''),[1] and Rule 19b4 thereunder,[2] notice is hereby given that on February 5, 2002, the National Association of Securities Dealers, Inc. (''NASD'') through its subsidiary, The Nasdaq Stock Market, Inc. (''Nasdaq'') filed with the Securities and Exchange Commission (''SEC'' or ''Commission'') the proposed rule change as described in Items I, II, and III below, which Items have been prepared by Nasdaq. The Commission is publishing this notice to solicit comments on the proposed rule change, as amended, from interested persons.

I. Self-Regulatory Organization's Statement of the Terms of Substance of the Proposed Rule Change

In order to encourage NASD members to report their trades through Nasdaq, Nasdaq is proposing to charge lower transaction fees to market participants that use Nasdaq as their market of choice for trade reporting, while charging higher fees to market participants that avail themselves of Nasdaq's quotation montage or make limited use of its transaction execution systems but elect to report trades through other facilities.[3] Nasdaq

[1] 15 U.S.C. 78s(b)(1).

[2] 17 CFR 240.19b4.

[3] Nasdaq believes that this proposed rule change establishes or changes a due, fee, or other charge imposed by a self-regulatory organization and conceivably could be designated as immediately effective under Section 19(b)(3)(A) of the Act, 15 U.S.C. 78s(b)(3)(A). After discussions with Commission staff, Nasdaq determined that the proposed rule change should be filed under Section 19(b)(2), 15 U.S.C. 78s(b)(2), to provide an opportunity for a more extensive comment process. If the Commission approves this filing, however, Nasdaq reserves the right to file future modifications to the pricing structure proposed

Continued

requests that the Commission approve the proposal as an amendment to certain provisions of Nasdaq's pricing structure that are currently in effect on a pilot basis until October 31, 2002, with the proposal taking effect on the first day of the month immediately following approval by the Commission.[4] The text of the proposed rule change is set forth below. Proposed new language is in italics; proposed deletions are in brackets.

* * * * *

7010. System Services

(a)(1) No change.

(2) Market Data Revenue Sharing

(A) For a pilot period lasting until October 31, 2002, [NASD members] *Full Contribution Members (as defined in Rule 7010(i)(2))* shall receive a market data revenue sharing credit. The total credit shall be calculated in accordance with the following formula:

Credit = (0.80) × (Eligible Revenue) × (Member's Volume Percentage)

(B) Definitions. The following definitions shall apply to this Rule:

(i) ''Eligible Revenue'' shall mean:

a. The portion of the net distributable revenues that Nasdaq, through the NASD, is eligible to receive under the Nasdaq UTP Plan, that is attributed to the Nasdaq Level 1 Service for Eligible Securities, minus

b. The portion of the fee charged to Nasdaq by NASD Regulation, Inc. for regulatory services allocated to the Nasdaq Level 1 Service for Eligible Securities.

(ii) ''Eligible Securities'' shall mean all Nasdaq National Market securities and any other security that meets the definition of ''Eligible Security'' in the Nasdaq UTP Plan.

(iii) ''Member's Volume Percentage'' shall mean the average of:

a. The percentage derived from dividing the total number of trades in Eligible Securities that the member reports in accordance with NASD trade reporting rules to the Automated Confirmation Transaction Service (''ACT'') by the total number of trades in Eligible Securities reported to ACT by NASD members, and

b. The percentage derived from dividing the total number of shares represented by trades in Eligible Securities that the member reports in accordance with NASD trade reporting rules to ACT by the total number of shares represented by all trades in Eligible Securities reported to ACT by NASD members.

(iv) ''Nasdaq UTP Plan'' shall mean the Joint Self-Regulatory Plan Governing the Collection, Consolidation and Dissemination of Quotation and Transaction Information for Nasdaq-Listed Securities Traded on Exchanges on an Unlisted Trading Privilege Basis.

(b)–(h) No change.

(i) Transaction Execution Services

(1) No change.

(2) Nasdaq National Market Execution System (SuperSoes)[5]

(A) The following charges shall apply to the use of the Nasdaq National Market Execution System:

Order Entry Charge—$0.10 per order entry (entering party only)

Per Share Charge—$0.001 per share executed for all fully or partially executed orders (entering party only)

Cancellation Fee—$0.25 per order cancelled (canceling party only)

(B)(i) For a pilot period [commencing on November 1, 2001 and] lasting until October 31, 2002, the per share charge will be [$0.002 per share executed for all fully or partially executed orders (entering party only).] *determined as follows:*

Full Contribution Members: $0.002 per share executed for all fully or partially executed orders (entering party only)

Partial Contribution Members: $0.0025 per share executed for all fully or partially executed orders (entering party only)

(ii) Definitions. The following definitions shall apply to this Rule:

a. ''Full Contribution Member'' shall mean an NASD member whose Reporting Percentage was at least 95% in the preceding month. Nasdaq will request that a member submit data demonstrating that it satisfies the definition of a Full Contribution Member if Nasdaq needs such data to determine whether a member is a Full Contribution Member. Nasdaq will deem a member that fails to submit such data upon request to be a Partial Contribution Member.

b. ''Partial Contribution Member'' shall mean an NASD member whose Reporting Percentage was less than 95% in the preceding calendar month.

c. ''Reporting Percentage'' shall mean the average of:

(I) the percentage derived from dividing the total number of trades in Eligible Securities (as defined in NASD Rule 7010(a)(2)(B)) that a member reports in accordance with NASD trade reporting rules to the Automated Confirmation Transaction Service (''ACT'') by the total number of trades in Eligible Securities that such member reports to all self-regulatory organizations and securities information processors, and

(II) the percentage derived from dividing the total number of shares represented by trades in Eligible Securities that such member reports in accordance with NASD trade reporting rules to ACT by the total number of shares represented by all trades in Eligible Securities that such member reports to all self-regulatory organizations and securities information processors.

If Nasdaq determines that a member is causing a significant percentage of trades to be reported through an affiliate primarily for the purpose of maintaining its Reporting Percentage above 95%, Nasdaq will consider trades reported through such affiliate to be trades reported by the member for purposes of calculating the Reporting Percentage.

(3)–(4) No change.

(5) Quotation Updates

(A) Except as provided in subparagraph (B), for a pilot period [commencing on February 1, 2002 and] lasting until October 31, 2002, a fee of $0.01 per quotation update will be charged to [NASD members] *Full Contribution Members* that post quotations in the Nasdaq quotation montage*, and a fee of $0.02 per quotation update will be charged to Partial Contribution Members that post quotations in the Nasdaq quotation montage.* A ''quotation update'' includes any change to the price or size of a displayed quotation or reserve size.

(B) A quotation update fee will not be charged for a change in the displayed quotation or reserve size that is performed automatically by the Nasdaq

herein under Section 19(b)(3)(A). *See* discussion *infra* at n.8.

[4] It should be noted that Nasdaq will file a new pricing structure for its SuperMontage system, which is expected to become operational later this year, and that the new pricing structure will replace the current pricing structure for the Nasdaq National Market Execution System (the ''NNMS'' or ''SuperSOES'') and SelectNet systems, including pricing pilots that are in effect. Certain aspects of the new pricing structure, however, may resemble the current structure.

[5] In Securities Exchange Act Release No. 44391 (Oct. 12, 2001), 66 FR 53276 (Oct. 19, 2001) (SR–NASD–2001–72), Nasdaq has proposed amending NASD Rule 7010(i)(2) to include a definition of ''Participating UTP Exchange'' and to set the price for trade executions through the NNMS by Participating UTP Exchanges at $0.003 per share. Nasdaq proposed to define ''Participating UTP Exchange'' as any registered national securities exchange that has unlisted trading privileges (a ''UTP Exchange'') in Nasdaq-listed securities pursuant to the Joint Self-Regulatory Plan Governing the Collection, Consolidation, and Dissemination of Quotation and Transaction Information for Nasdaq-Listed Securities Traded on an Unlisted Trading Privilege Basis (the ''Nasdaq UTP Plan'' or the ''Plan'') and that elects to participate in the NNMS. Nasdaq represents that depending on the order in which SR–NASD–2001–72 and this filing are approved, it will submit conforming amendments either to SR–NASD–2001–72 or to this filing to reflect the approval of the other filing.

National Market Execution System (''NNMS'') when an execution against the quotation occurs (other than a change performed by the ''Autoquote Refresh'' functionality of the NNMS, for which a fee will be assessed).

(j)–(p) No change.

* * * * *

II. Self-Regulatory Organization's Statement of the Purpose of, and Statutory Basis for, the Proposed Rule Change

In its filing with the Commission, Nasdaq included statements concerning the purpose of, and basis for, the proposed rule change and discussed any comments it received on the proposed rule change. The text of these statements may be examined at the places specified in Item IV below. Nasdaq has prepared summaries, set forth in Sections A, B, and C below, of the most significant aspects of such statements.

A. Self-Regulatory Organization's Statement of the Purpose of, and Statutory Basis for, the Proposed Rule Change

1. Purpose

On September 28, 2001, Nasdaq filed proposed rule changes to make modifications to the pricing structure for the NNMS and SelectNet service.[6] Nasdaq designed these changes as an interim modification to begin the process of aligning the charges to market participants for using the NNMS and SelectNet more closely with the costs of providing these services and the benefits that they provide to market participants. On October 4, 2001, Nasdaq filed additional rule changes to increase the per share charge for use of the NNMS and introduce a liquidity provider rebate for NASD members.[7]

On October 9, 2001, Nasdaq filed a proposed rule change—SR–NASD–2001–71—to introduce a mechanism for sharing market data revenue with NASD members, to introduce a quotation update charge, and to modify the fees for use of the NNMS and the liquidity provider rebate in order to calibrate the level of fees and rebates to the contributions that types of members make to the support of the Nasdaq market.[8] On November 29, 2001, after discussions with Commission staff, Nasdaq withdrew SR–NASD–2001–71 prior to the date scheduled for its implementation, December 1, 2001, to allow Nasdaq to make adjustments to the mechanism for market data revenue sharing and the quotation update charge, and to provide interested persons with a greater opportunity to comment on aspects of the proposal concerning differentiation among members. On December 27, 2001, Nasdaq refiled a proposal to introduce a quote update fee and market data revenue sharing program.[9]

In this filing, Nasdaq is offering incentives to market participants that support Nasdaq operations through trade reporting. The proposal delineates two types of members. A ''Full Contribution Member'' is defined as an NASD member that reports at least 95% of the trades that it reports through the Automated Confirmation Transaction System (''ACT''), Nasdaq's trade reporting system, either directly or as a result of an execution through a Nasdaq transaction execution system. The percentage would be measured with reference to both the total number of trades and the total number of shares represented by those trades. All other NASD members will be considered ''Partial Contribution Members'' under the proposal.

A member's status will be evaluated on a monthly basis, with reference to trade reporting activity during the preceding month. Nasdaq will request that a member submit data demonstrating that it satisfies the definition of a Full Contribution Member if it needs such data to determine the status of a particular member, and will deem a member that fails to submit such data upon request to be a Partial Contribution Member.[10] In addition, if Nasdaq determines that a member is causing a significant percentage of trades to be reported through an affiliate (i.e. a person that controls, is controlled by, or is under common control with a member) primarily for the purpose of maintaining its Reporting Percentage above 95%, Nasdaq will consider trades reported through such affiliate to be trades reported by the member for purposes of calculating the Reporting Percentage. This flexibility in the application of the rule is necessary to ensure that a member does not evade the intent of the rule by conducting non-Nasdaq business through an affiliate while retaining its own status as a Full Contribution Member for the business that it does conduct through Nasdaq.

The per share charge for the execution of orders in the NNMS will remain $0.002 per share for Full Contribution Members, while Partial Contribution Members will pay $0.0025 per share.[11] Nasdaq's new quotation update fee, which went into effect on February 1, 2002, will remain $0.01 per quotation update for Full Contribution Members but will be increased to $0.02 per update for Partial Contribution Members.[12] Finally, Nasdaq's new market data revenue sharing program, which also went into effect on February 1, 2002, will be modified to make it available only to Full Contribution Members.

Nasdaq represents that it is proposing these changes to its pricing structure in order to meet the competitive challenges posed by UTP Exchanges. From 1986 until 1999, only the Chicago Stock Exchange, Inc. (''CHX'') traded Nasdaq-listed securities pursuant to the Nasdaq UTP Plan, and only on a very limited scale. In late 1999 and early 2000, however, trading volumes in Nasdaq securities expanded dramatically. As a result, five additional exchanges—the Cincinnati Stock Exchange, Inc. (''CSE''), the Philadelphia Stock Exchange, Inc. (''Phlx''), the Pacific Exchange, Inc. (''PCX''), the American Stock Exchange LLC (''AMEX''), and the Boston Stock Exchange, Inc. (''BSE'')—have commenced, or announced their intention to commence, trading of

[6] *See* Securities Exchange Act Release No. 44899 (Oct. 2, 2001), 66 FR 51707 (Oct. 10, 2001) (SR–NASD–2001–63); Securities Exchange Act Release No. 44898 (Oct. 2, 2001), 66 FR 51703 (Oct. 10, 2001) (SR–NASD–2001–64).

[7] *See* Securities Exchange Act Release No. 44914 (Oct. 9, 2001), 66 FR 52649 (Oct. 16, 2001) (SR–NASD–2001–68); Securities Exchange Act Release No. 44910 (Oct. 5, 2001), 66 FR 52167 (Oct. 12, 2001) (SR–NASD–2001–67).

[8] *See* Securities Exchange Act Release No. 44918 (Oct. 10, 2001), 66 FR 52814 (Oct. 17, 2001) (SR–NASD–2001–71). Nasdaq withdrew SR–NASD–2001–71 by letter dated November 29, 2001. Also on October 9, 2001, Nasdaq filed a proposed rule change to increase the per share charge payable by UTP Exchanges that use the NNMS. *See* Securities Exchange Act Release No. 44391 (Oct 12, 2001), 66 FR 53276 (Oct. 19, 2001) (SR–NASD–2001–72).

[9] *See* Securities Exchange Act Release No. 45342 (Jan. 28, 2002), 67 FR 5109 (Feb. 1, 2002) (SR–NASD–2001–96). The proposal was effective upon filing and was implemented on February 1, 2002.

[10] To eliminate any administrative burdens associated with verification of a member's status, a member could authorize the NASD to certify its status to Nasdaq on the basis of Order Audit Trail System (''OATS'') data. Nasdaq, however, would not have access to the member's OATS data.

[11] In SR–NASD–2001–72, Nasdaq proposed amending NASD Rule 7010(i)(2) to provide that Participating UTP Exchanges will pay $0.003 per share for NNMS executions. Nasdaq proposed to define a ''Participating UTP Exchange'' as any UTP Exchange that elects to participate in the NNMS. Other UTP Exchanges access the Nasdaq market through telephone linkages and therefore are not assessed charges for the use of Nasdaq transaction execution systems. Depending on the order in which SR–NASD–2001–72 and this filing are approved, Nasdaq will submit conforming amendments either to SR–NASD–2001–72 or to this filing to reflect the approval of the other filing.

[12] However, quote updates that are performed automatically by SuperSOES as the result of trade executions would continue to be free for all members.

Nasdaq-listed securities pursuant to unlisted trading privileges. Moreover, some UTP Exchanges are aggressively pursuing the trade reporting revenue associated with internalized trades and trades conducted through the facilities of electronic communications networks. Nasdaq has every intention of being an active participant in the competition for trade execution and reporting.

Nasdaq represents that self-regulatory organization pricing structures routinely distinguish among members on the basis of level of usage of a particular system. For example, Nasdaq's current pricing for liability orders executed through its SelectNet service charges $0.90 per order for the first 25,000 orders that a member executes during a month, but only $0.60 for the next 25,000, and $0.10 for the next 200,000, with all remaining orders being free. Thus, a member that conducts a great deal of business through SelectNet will pay a lower per order charge than a member that conducts relatively little business.

Similarly, the distinction between Full Contribution Members and Partial Contribution Members recognizes that although most members are well-integrated into Nasdaq's market structure and would therefore be considered Full Contribution Members, other members may choose not to use Nasdaq as their market of first choice for trade reporting. For example, a member may use Nasdaq's quotation montage to advertise available liquidity, but the quote may be accessed through non-Nasdaq systems and reported to a UTP Exchange. Nasdaq believes that it must ensure that the capacity of its quotation engine is adequate to support the member's quotation activity and it must finance the regulatory infrastructure that oversees the member's activities on Nasdaq and the market in general, but it would receive proportionately less revenue from the member than from a comparable member that reported trades through ACT. Accordingly, when a Partial Contribution Member chooses to use Nasdaq systems for quotation or trade execution, Nasdaq believes that it should be permitted to assess a higher charge than it does on a Full Contribution Member. The distinction between types of members is comparable to any other pricing structure that offers lower prices to regular users of a service but charges higher prices to less regular users. Unlike a system of volume-based discounts, however, the proposal would not disadvantage small firms that report most of their trades through Nasdaq but do not achieve a high volume.

2. Statutory Basis

Nasdaq believes that the proposed rule change is consistent with the Act, including section 15A(b)(5) of the Act,[13] which requires that the rules of the NASD provide for the equitable allocation of reasonable fees, dues, and other charges among members and issuers and other persons using any facility or system which the NASD operates or controls, and section 15A(b)(6) of the Act,[14] which requires rules that are not designed to permit unfair discrimination between customers, issuers, brokers or dealers. In Nasdaq's view, these provisions require Nasdaq to establish prices that provide similar treatment to similarly situated members; they do not require Nasdaq to provide identical treatment to all market participants without regard to their level of participation in the market.

As the Commission has noted in the context of another self-regulatory organization's fees, the Act ''prohibits 'unfair discrimination,' not 'discrimination' simpliciter * * *''.[15] Nasdaq believes that the proposed fee structure distinguishes among market participants in order to reward those who do the most to finance market innovations such as SuperSOES and who contribute the most to the liquidity and efficient operation of Nasdaq's market, while imposing higher fees on market participants that receive the benefits of posting quotations on Nasdaq systems but pay relatively little to support the operation of those systems. Thus, the economic incentives embodied by the new fee structure are designed to promote behavior that benefits both the market structure that Nasdaq offers to investors and Nasdaq as a business. As another self-regulatory organization noted when it established a credit available only to certain of its market participants, ''measures * * * designed to promote and encourage certain behaviors and/or discourage others * * * [are] an appropriate, nondiscriminatory business strategy.''[16]

Moreover, Nasdaq believes that the level of fees charged to market participants under the proposal is reasonable. By definition, a Partial Contribution Member will make less use of Nasdaq systems than a Full Contribution Member. Accordingly, assessing higher fees on the former will not result in the member paying unreasonably high fees for the services that it does obtain from Nasdaq.

B. Self-Regulatory Organization's Statement on Burden on Competition

Nasdaq does not believe that the proposed rule change will impose any burden on competition that is not necessary or appropriate in furtherance of the purposes of the Act. Nasdaq believes that the proposal is designed as a reasonable response to the competitive challenges posed by UTP Exchanges. UTP Exchanges are actively seeking to encourage market participants to report trades in Nasdaq securities through their facilities. In order to remain competitive, Nasdaq believes that it must create incentives for market participants to report trades through Nasdaq.

C. Self-Regulatory Organization's Statement on Comments on the Proposed Rule Change Received From Members, Participants, or Others

The Commission received a number of comment letters that referenced SR–NASD–2001–71, a proposed rule change that contained a proposal similar to the proposal contained in this filing but that was withdrawn prior to its implementation. SR–NASD–2001–71 was withdrawn for the specific purpose of allowing interested persons a greater opportunity to comment on the proposal in isolation from other changes to Nasdaq's pricing structure that were filed with SR–NASD–2001–71 and in other contemporaneous filings relating to Nasdaq fees. Accordingly, Nasdaq proposes to respond to any written comments received on the proposed rule change contained herein after the proposed rule change has been published for comment and the comment period has expired. Nasdaq did not solicit or receive written comments on the proposed rule change contained herein.

III. Date of Effectiveness of the Proposed Rule Change and Timing for Commission Action

Within 35 days of the date of publication of this notice in the **Federal Register** or within such longer period (i) as the Commission may designate up to 90 days of such date if it finds such longer period to be appropriate and publishes its reasons for so finding or (ii) as to which the NASD consents, the Commission will:

(A) By order approve such proposed rule change, or

(B) Institute proceedings to determine whether the proposed rule change should be disapproved.

[13] 15 U.S.C. 78*o*–3(b)(5).

[14] 15 U.S.C. 78*o*–3(b)(6).

[15] Securities Exchange Act Release No. 37250 (May 29, 1996), 61 FR 28629 (June 5, 1996) (SR–CBOE–96–23) (quoting Timpinaro v. SEC, 2 F.3d 453, 456 (D.C. Cir. 1993)).

[16] Securities Exchange Act Release No. 44292 (May 11, 2001), 66 FR 27715 (May 18, 2001) (SR–Phlx–2001–49).

IV. Solicitation of Comments

Interested persons are invited to submit written data, views, and arguments concerning the foregoing, including whether the proposed rule change is consistent with the Act. Persons making written submissions should file six copies thereof with the Secretary, Securities and Exchange Commission, 450 Fifth Street, NW., Washington, DC 20549–0609. Copies of the submission, all subsequent amendments, all written statements with respect to the proposed rule change that are filed with the Commission, and all written communications relating to the proposed rule change between the Commission and any person, other than those that may be withheld from the public in accordance with the provisions of 5 U.S.C. 552, will be available for inspection and copying at the Commission's Public Reference Room. Copies of such filing will also be available for inspection and copying at the principal office of the NASD. All submissions should refer to File No. SR–NASD–2002–18 and should be submitted by April 1, 2002.

For the Commission, by the Division of Market Regulation, pursuant to delegated authority.[17]

Jill M. Peterson,

Assistant Secretary.

[FR Doc. 02–5781 Filed 3–8–02; 8:45 am]

BILLING CODE 8010–01–U

SECURITIES AND EXCHANGE COMMISSION

[Release No. 34–45499, File No. SR–NASD–98–26 Amend. No. 12]

Self-Regulatory Organizations; National Association of Securities Dealers, Inc.; Notice of Filing and Order Granting Accelerated Approval to Amendment No. 12 to a Proposed Rule Change Relating to an Extension of the NASD Short Sale Rule and Continued Suspension of Primary Market Maker Standards Set Forth in NASD Rule 4612

March 4, 2002.

Pursuant to section 19(b)(1) of the Securities Exchange Act of 1934 (''Act'')[1] notice is hereby given that on February 28, 2002, the National Association of Securities Dealers, Inc., through its subsidiary, The Nasdaq Stock Market, Inc. (''Nasdaq'') filed with the Securities and Exchange Commission (''Commission'' or ''SEC'') the proposed rule change as described in Items I and II below, which Items have been prepared by Nasdaq. The Commission is publishing this notice to solicit comments on the proposed rule change from interested persons.

I. Self-Regulatory Organization's Statement of the Terms of Substance of the Proposed Rule Change

Nasdaq is proposing to extend the pilot program of the NASD short sale rule (''Rule 3350'') from March 1, 2002 until December 15, 2002. Nasdaq is also seeking to continue the suspension of the effectiveness of the Primary Market Maker (''PMM'') standards currently set forth in NASD Rule 4162 also from March 1, 2002 until December 15, 2002. The text of the proposed rule change is as follows. Additions are italicized; deletions are bracketed.

NASD Rule 3350

* * * * *

(l) This section shall be in effect until *December 15, 2002* [March 1, 2002].

II. Self-Regulatory Organization's Statement of the Purpose of, and Statutory Basis for, the Proposed Rule Change

In its filing with the Commission, Nasdaq included statements concerning the purpose of and basis for the proposed rule change. The text of these statements may be examined at the places specified in Item III below. Nasdaq has prepared summaries, set forth in Sections A, B, and C below, of the most significant aspects of such statements.

A. Background and Description of the NASD's Short Sale Rule

Section 10(a) of the Act gives the Commission plenary authority to regulate short sales of securities registered on a national securities exchange, as needed to protect investors. Although the Commission has regulated short sales since 1938, that regulation has been limited to short sales of exchange-listed securities. In 1992, Nasdaq, believing that short-sale regulation is important to the orderly operation of securities markets, proposed a short sale rule for trading of its National Market securities that incorporates the protections provided by Rule 10a–1 under the Act. On June 29, 1994, the SEC approved Rule 3350 applicable to short sales[2] in Nasdaq National Market (''NNM'') securities on an eighteen-month pilot basis through March 5, 1996.[3] The NASD and the Commission have extended Rule 3350 numerous times, most recently, until March 1, 2002. Rule 3350 employs a ''bid'' test rather than a tick test because Nasdaq trades are not necessarily reported to the tape in chronological order. The Rule prohibits short sales at or below the inside bid when the current inside bid is below the previous inside bid. Nasdaq calculates the inside bid from all market makers in the security (including bids for exchanges trading Nasdaq securities on an unlisted trading privileges basis), and disseminates symbols to denote whether the current inside bid is an ''up-bid'' or a ''down-bid.'' To effect a ''legal'' short sale on a down-bid, the short sale must be executed at a price at least $.01 above the current inside bid. Rule 3350 is in effect from 9:30 a.m. until 4 p.m. each trading day.

To reduce the compliance burdens on its members, Rule 3350 also incorporates seven exemptions contained in Rule 10a–1 under the Act, that are relevant to trading on Nasdaq.[4] For example, in an effort to not constrain the legitimate hedging needs of options market makers, Rule 3350 also contains a limited exception for standardized options market makers. The Rule also contains an exemption for warrant market makers similar to the one available for options market makers.

B. Background of the Primary Market Maker Standards

To ensure that market maker activities that provide liquidity and continuity to the market are not adversely constrained when the Rule is invoked, Rule 3350 provides an exemption for ''qualified'' Nasdaq market makers (*i.e.*, market makers that meet the PMM standards). Presently, NASD Rule 4612 provides

---

[17] 17 CFR 200.30–3(a)(12).

[1] 15 U.S.C. 78s(b)(1).

[2] A short sale is a sale of a security that the seller does not own or any sale that is consummated by the delivery of a security borrowed by, or for the account of, the seller. To determine whether a sale is a short sale members must adhere to the definition of a ''short sale'' contained in Rule 3b–3 under the Act, which is incorporated into Nasdaq's short sale rule by NASD Rule 3350(k)(1).

[3] *See* Securities Exchange Act Release No. 34277 (June 29, 1994), 59 FR 34885 (July 7, 1994) (''Short Sale Rule Approval Order'').

[4] *See* NASD Rule 3350(c)(2)–(8). The Rule also provides that a member not currently registered as a Nasdaq market maker in a security that has acquired the security while acting in the capacity of a block positioner shall be deemed to own such security for the purposes of the Rule notwithstanding that such member may not have a net long position in such security if and to the extent that such member's short position in such security is subject to one or more offsetting positions created in the course of bona fide arbitrage, risk arbitrage, or bona fide hedge activities. In addition, the NASD has recognized that SEC staff interpretations to Rule 10a–1 under the Act dealing with the liquidation of index arbitrage positions and an ''international equalizing exemption'' are equally applicable to the NASD's short sale rule.

that a member registered as a Nasdaq market maker pursuant to NASD Rule 4611 may be deemed a PMM if that member meets certain threshold standards.

Since Rule 3350 has been in effect, there have been three methods used to determine whether a market maker is eligible for the market maker exemption. Specifically, from September 4, 1994 through February 1, 1996, Nasdaq market makers that maintained a quotation in a particular NNM security for 20 consecutive business days were exempt from the Rule for short sales in that security, provided the short sales were made in connection with bona fide market making activity (''the 20-day'' test). From February 1, 1996 until the February 14, 1997, the ''20-day'' test was replaced with a four-part quantitative test known as the PMM standards.[5]

On February 14, 1997, the PMM standards were waived for all NNM securities due to the effects of the SEC's Order Handling Rules and corresponding NASD rule change and system modifications on the operation of the four quantitative standards.[6] For example, among other effects, the requirement that market makers display customer limit orders adversely affected the ability of market makers to satisfy the ''102% Average Spread Standard''. Since that time all market makers have been designated as PMMs.

In March 1998, Nasdaq proposed PMM standards that received substantially negative comments.[7] In light of those comments, Nasdaq staff convened an advisory subcommittee to develop new PMM standards (''Subcommittee'') in August 1998. The Subcommittee met nine times and formulated new PMM standards. NASD/Nasdaq staff requested to meet with the Commission staff and the Subcommittee to receive informal feedback on the new PMM standards. This meeting occurred on December 9, 1998. At the conclusion of the meeting, Commission staff noted the progress made by the Subcommittee and requested time to digest and more carefully analyze the proposed new PMM standards.

On July 29, 1999, members of the Nasdaq staff conducted a conference call with members of the Commission staff to receive feedback on the PMM standards that Nasdaq presented at the December 9, 1998 meeting. During the meeting, the Commission staff requested that Nasdaq modify several of the proposed standards and analyze the impact of those modifications on the primary market maker determination. On September 27, 1999, Nasdaq reported that the NASD Economic Research staff had analyzed data based on the Commission's recommended revisions, and concluded that the Commission's modified standards produced unfavorable results. Nasdaq requested that the Commission comment on the outcome of this test ''as we intend to communicate your comments to the Subcommittee in an effort to resume the process of developing new standards.''[8]

Nasdaq suspended development of PMM standards in late-1999 after the Commission signaled the securities industry that it is considering fundamental changes to Rule 10a–1 under the Act, changes that could affect the manner in which Nasdaq and the other markets regulate short sales. In October 1999, the Commission issued a Concept Release on Short Sales in which it sought comment on, among other things, revising the definition of short sale, extending short sale regulation to non-exchange listed securities, and eliminating short sale regulation altogether. Nasdaq believed that it would be inappropriate for Nasdaq to dramatically alter its regulation of short sales while the Commission is considering fundamentally changing Rule 10a–1 under the Act. At the request of the staff of the Division of Market Regulation, Nasdaq has resumed development of PMM standards and has been working with the Commission staff toward that goal.

C. Proposal To Extend the Short Sale Rule and Suspend the PMM Standards

Nasdaq believes that it is in the best interest of investors to extend the short sale regulation pilot program. When the Commission approved the NASD's short sale rule on a pilot basis, it made specific findings that the Rule was consistent with sections 11A, 15A(b)(6), 15A(b)(9), and 15A(b)(11) of the Act. Specifically, the Commission stated that, ''recognizing the potential for problems associated with short selling, the changing expectations of Nasdaq market participants and the competitive disparity between the exchange markets and the OTC market, the Commission believes that regulation of short selling of Nasdaq National Market securities is consistent with the Act.''[9] In addition, the Commission stated that it ''believes that the NASD's short sale bid-test, including the market maker exemptions, is a reasonable approach to short sale regulation of Nasdaq National Market securities and reflects the realities of its market structure.''[10] Nasdaq believes the benefits that the Commission recognized when it first approved Rule 3350 apply with equal force today.

Similarly, the concerns that caused the Commission to waive the PMM standards in February 1997 continue to exist today. Nasdaq and the Commission agreed to waive the PMM standards for three reasons that were discovered only after the Order Handling Rules were implemented.[11] Through late-1999, Nasdaq worked diligently to address those concerns to the Commission's satisfaction, including convening a special subcommittee on PMM issues, proposing two different sets of PMM standards, and being continuously available and responsive to Commission staff to discuss this issue. Despite these efforts, the Commission and Nasdaq were unable to establish satisfactory PMM standards. At the request of Commission staff, Nasdaq has begun developing PMM standards suitable to today's rapidly changing marketplace. Re-instating the PMM standards set forth in NASD Rule 4612 would be extremely disruptive to the market and harmful to investors.

[5] Under the PMM standards, a market maker was required to satisfy at least two of the following four criteria each month to be eligible for an exemption from the short sale rule: (1) The market maker must be at the best bid or best offer as shown on Nasdaq no less that 35 percent of the time; (2) the market maker must maintain a spread no greater than 102 percent of the average dealer spread; (3) no more than 50 percent of the market maker's quotation updates may occur without being accompanied by a trade execution of at least one unit of trading; or (4) the market maker executes 1½ times its ''proportionate'' volume in the stock. If a PMM did not satisfy the threshold standards after a particular review period, the market maker lost its designation as a PMM (*i.e.*, the ''P'' next to its market maker identification was removed). Market makers could requalify for designation as a PMM by satisfying the threshold standards in the next review period.

[6] *See* Securities Exchange Act Release No. 38294 (February 17, 1997), 62 FR 8289 (February 24, 1997).

[7] *See* Securities Exchange Act Release No. 39189 (March 30, 1998), 63 FR 16841 (April 6, 1998).

[8] *See* Letter, dated September 27, 1999 from John F. Malitzis, Assistant General Counsel, Nasdaq, to Richard Strasser, Assistant Director, Division of Market Regulation, SEC.

[9] *See* Short Sale Rule Approval Order, *supra* note 3.

[10] *Id.*

[11] Implementation of the Order Handling Rules created the following three issues: (1) Many market makers voluntarily chose to display customer limit orders in their quotes although the Limit Order Display Rule did not require it at that time; (2) SOES decrementation for all Nasdaq stocks significantly affected market makers' ability to meet several of the primary market maker standards; and (3) with the inability to meet the existing criteria for a larger number of securities, a market maker may be prevented from registering as a primary market maker in an initial public offering because it fails to meet the 80% primary market maker test contained in Rule 4612(g)(2)(B).

D. Self-Regulatory Organization's Statement on Burden on Competition

Nasdaq believes that the proposed rule change will not result in any burden on competition that is not necessary or appropriate in furtherance of the purposes of the Act.

E. Self-Regulatory Organization's Statement on Comments on the Proposed Rule Change Received From Members, Participants, or Others

Comments were neither solicited nor received.

III. Solicitation of Comments

Interested persons are invited to submit written data, views, and arguments concerning the foregoing, including whether the proposed rule change is consistent with the Act. Persons making written submissions should file six copies thereof with the Secretary, Securities and Exchange Commission, 450 Fifth Street, NW, Washington, DC 20549–0609. Copies of the submission, all subsequent amendments, all written statements with respect to the proposed rule change that are filed with the Commission, and all written communications relating to the proposed rule change between the Commission and any person, other than those that may be withheld from the public in accordance with the provisions of 5 U.S.C. 552, will be available for inspection and copying in the Commission's Public Reference Room. Copies of the filing will also be available for inspection and copying at the principal office of the NASD. All submissions should refer to the file number in the caption above and should be submitted by April 1, 2002.

IV. Commission's Findings and Order Granting Accelerated Approval of the Amendment

After careful consideration, the Commission finds, for the reasons set forth below, that the extension of the Short Sale Rule Pilot and the suspension of the existing PMM standards until December 15, 2002 is consistent with the requirements of the Act and the rules and regulations thereunder. In particular, the extension is consistent with section 15A(b)(6) [12] of the Act, which requires that the NASD's rules be designed, among other things, to remove impediments to and perfect the mechanism of a free and open market and a national market system and to promote just and equitable principles of trade.

The Commission finds that the continuation of the Short Sale Rule Pilot and the continued suspension of the PMM standards will maintain the status quo while the Commission is considering amending Rule 10a–1 under the Act. This extension of the pilot and continued suspension of the PMM standards is subject to modification or revocation should the Commission amend Rule 10a–1 under the Act in a manner as to deem the extension or suspension unnecessary or in conflict with any adopted amendments.[13]

The Commission finds good cause for approving the extension of the Short Sale Rule Pilot and the suspension of existing PMM standards prior to the 30th day after the date of publication of notice of the filing in the **Federal Register**. It could disrupt the Nasdaq market and confuse market participants to reintroduce the previous PMM standards while new PMM standards are being developed, and while the Commission considers amending Rule 10a–1 under the Act.

It is therefore ordered, pursuant to section 19(b)(2) of the Act,[14] that Amendment No. 12 to the proposed rule change, SR–NASD–98–26, which extends the NASD Short Sale Rule Pilot and suspends the PMM standards through December 15, 2002, is approved on an accelerated basis.[15]

For the Commission, by the Division of Market Regulation, pursuant to delegated authority.[16]

Jill M. Peterson,

Assistant Secretary.

[FR Doc. 02–5782 Filed 3–8–02; 8:45 am]

BILLING CODE 8010–01–U

[12] 15 U.S.C. 78*o*–3(b)(6).

[13] Absent an exemption, Rule 10a–1 under the Act would apply to Nasdaq on Commission approval of its exchange registration.

[14] 15 U.S.C. 78s(b)(2).

[15] In approving Amendment No. 12, the Commission has considered its impact on efficiency, competition, and capital formation. 15 U.S.C. 78c(f).

[16] 17 CFR 200.30–3(a)(12).

SECURITIES AND EXCHANGE COMMISSION

[Release No. 34–45503; File No. SR–NASD–2002–29]

Self-Regulatory Organizations; Notice of Filing and Immediate Effectiveness of Proposed Rule Change by the National Association of Securities Dealers, Inc. To Extend a Pilot Program Making Available Certain Nasdaq Services and Facilities Until 6:30 p.m. Eastern Time

March 5, 2002.

Pursuant to Section 19(b)(1) of the Securities Exchange Act of 1934 (''Act''),[1] and Rule 19b–4 thereunder,[2] notice is hereby given that on March 4, 2002, the National Association of Securities Dealers, Inc. (''NASD'' or ''Association''), through its subsidiary, The Nasdaq Stock Market, Inc. (''Nasdaq'') filed with the Securities and Exchange Commission (''Commission'') the proposed rule change as described in Items I, II and III below, which Items have been prepared by Nasdaq. Nasdaq filed the proposal pursuant to Section 19(b)(3)(A) of the Act,[3] and Rule 19b–4(f)(6) thereunder,[4] which renders the proposal effective upon filing with the Commission.[5] The Commission is publishing this notice to solicit comments on the proposed rule change from interested persons.

I. Self-Regulatory Organization's Statement of the Terms of Substance of the Proposed Rule Change

Nasdaq proposes to extend through September 1, 2002 its pilot program making available several Nasdaq services and facilities until 6:30 P.M. Eastern Time. No substantive changes are being made to the pilot program, other than extending the operation of the pilot program through September 1, 2002. The text of the proposed rule change is available at the Association and at the Commission.

II. Self-Regulatory Organization's Statement of the Purpose of, and Statutory Basis for, the Proposed Rule Change

In its filing with the Commission, Nasdaq included statements concerning the purpose of and basis for its proposal and discussed any comments it received regarding the proposal. The text of these

[1] 15 U.S.C. 78s(b)(1).

[2] 17 CFR 240.19b–4.

[3] 15 U.S.C. 78s(b)(3)(A).

[4] 17 CFR 240.19b–4(f)(6).

[5] Nasdaq asked the Commission to waive the 5-day pre-filing notice requirement and the 30-day operative delay. *See* Rule 19b–4(f)(6)(iii). 17 CFR 240.19b–4(f)(6)(iii).

statements may be examined at the places specified in Item IV below. Nasdaq has prepared summaries, set forth in Sections A, B and C below, of the most significant aspects of such statements.

A. Self-Regulatory Organization's Statement of the Purpose of, and Statutory Basis for, the Proposed Rule Change

1. Purpose

Nasdaq proposes to extend through September 1, 2002 its current pilot program that makes available certain Nasdaq systems and facilities until 6:30 P.M. Eastern Time. The pilot will continue to operate under the same terms and conditions as set forth in the Commission's original approval order, including mandating 90-second trade reporting until 6:30 P.M. Eastern Time.[6]

2. Statutory Basis

Nasdaq believes that the proposal is consistent with the provisions of Section 15A(b)(6) of the Act[7] in that it is designed to prevent fraudulent and manipulative acts and practices, to promote just and equitable principles of trade, to foster cooperation and coordination with persons engaged in regulating, clearing, settling, and processing information with respect to, and facilitating transactions in securities.

B. Self-Regulatory Organization's Statement on Burden on Competition

Nasdaq does not believe that the proposed rule change will result in any burden on competition that is not necessary or appropriate in furtherance of the purposes of the Act.

C. Self-Regulatory Organization's Statement on Comments on the Proposed Rule Change Received From Members, Participants or Others

Written comments were neither solicited nor received.

III. Date of Effectiveness of the Proposed Rule Change and Timing for Commission Action

Because the foregoing proposed rule change does not:

(i) Significantly affect the protection of investors or the public interest;

(ii) Impose any significant burden on competition; and

(iii) Become operative for 30 days from the date on which it was filed, or such shorter time as the Commission may designate, it has become effective pursuant to Section 19(b)(3)(A) of the Act[8] and Rule 19b–4(f)(6) thereunder.[9] At any time within 60 days of the filing of the proposed rule change, the Commission may summarily abrogate such rule change if it appears to the Commission that such action is necessary or appropriate in the public interest, for the protection of investors, or otherwise in furtherance of the purposes of the Act.

Nasdaq has requested that the Commission waive the 5-day pre-filing notice requirement and accelerate the operative date. The Commission finds good cause to waive the 5-day pre-filing notice requirement and the 30-day operative waiting period, because such designation is consistent with the protection of investors and the public interest. Acceleration of the operative date will allow the pilot program to continue without interruption through September 1, 2002. For these reasons, the Commission finds good cause to waive both the 5-day pre-filing notice requirement and the 30-day operative waiting period.[10]

IV. Solicitation of Comments

Interested persons are invited to submit written data, views, and arguments concerning the foregoing, including whether the proposal is consistent with the Act. Persons making written submissions should file six copies thereof with the Secretary, Securities and Exchange Commission, 450 Fifth Street, NW., Washington, DC 20549-0609. Copies of the submission, all subsequent amendments, all written statements with respect to the proposed rule change that are filed with the Commission, and all written communications relating to the proposed rule change between the Commission and any person, other than those that may be withheld from the public in accordance with the provisions of 5 U.S.C. 552, will be available for inspection and copying in the Commission's Public Reference Room. Copies of such filing will also be available for inspection and copying at the principal office of the Association. All submissions should refer to file number SR–NASD–2002–29 and should be submitted by April 1, 2002.

For the Commission, by the Division of Market Regulation, pursuant to delegated authority.[11]

Jill M. Peterson,

Assistant Secretary.

[FR Doc. 02–5783 Filed 3–8–02; 8:45 am]

BILLING CODE 8010–01–P

[6] *See* Securities Exchange Act Release No. 42003 (October 13, 1999), 64 FR 56554 (October 20, 1999) (order approving after-hours trading pilot).

[7] 15 U.S.C. 78o–3(b)(6).

[8] 15 U.S.C. 78s(b)(3)(A).

[9] 17 CFR 240.19b–4(f)(6).

[10] For purposes only of accelerating the operative date of this proposal, the Commission has considered the proposed rule's impact on efficiency, competition, and capital formation. 15 U.S.C. 78c(f).

[11] 17 CFR 200.30–3(a)(12).

SECURITIES AND EXCHANGE COMMISSION

[Release No. 34–45508; File No. SR–NASD–00–76]

Self-Regulatory Organizations; Notice of Filing of Amendment Nos. 2 and 3 to a Proposed Rule Change by the National Association of Securities Dealers, Inc. Relating to Locked and Crossed Markets That Occur at or Prior to the Market Open

March 5, 2002.

Pursuant to section 19(b)(1) of the Securities Exchange Act of 1934 (''Exchange Act''),[1] and Rule 19b–4 thereunder,[2] notice is hereby given that the National Association of Securities Dealers, Inc. (''NASD''), through its subsidiary, the Nasdaq Stock Market, Inc. (''Nasdaq''), filed with the Securities and Exchange Commission (''Commission'' or ''SEC'') Amendment Nos. 2 and 3 to the proposed rule change as described in Items I, II, and III below, which Items have been prepared by Nasdaq. The proposed rule change and Amendment No. 1 were published for comment in the **Federal Register** on February 7, 2001.[3] The Commission received seven comment letters regarding the proposal.[4] Nasdaq

[1] 15 U.S.C. 78s(b)(1).

[2] 17 CFR 240.19b–4.

[3] *See* Securities Exchange Act Release No. 43913 (January 31, 2001), 66 FR 9394 (''February 2001 Release'').

[4] *See* letter from Mark R. Grewe, Managing Director, NDB Capital Markets, L.P., to Jonathan G. Katz, Secretary, Commission, dated February 27, 2001 (''NDB Letter''); letter from Martin Cunningham, Senior Vice President Trading, Schwab Capital Markets L.P. (''Schwab''), to Jonathan G. Katz, Secretary, Commission, dated February 28, 2001 (''Schwab Letter''); letter from Richard B. Levin, Assistant General Counsel and Regulatory Affairs Officer, Knight Securities, L.P. (''Knight''), to the Commission, dated March 1, 2001 (''Knight Letter''); letter from Kim Bang, President, Bloomberg Tradebook LLC (''Bloomberg''), to the Commission, dated March 15, 2001 (''Bloomberg Letter''); letter from Timothy G. Grazioso, Subcommittee Chairman, Trading Issues Committee, Security Traders Association (''STA''), Michael T. Bird, Chairman, Trading Issues Committee, STA, and Geoffrey W. Cloud, Counsel, Trading Issues Committee, STA, to Jonathan G. Katz, Secretary, Commission, dated March 13, 2001 (''STA Letter''); letter from Kevin J.P. O'Hara, General Counsel, Archipelago, L.L.C. (''Archipelago'') to Jonathan G. Katz, Secretary, Commission, dated April 3, 2001 (''Archipelago

has responded to the commenters in Amendment Nos. 2 and 3 to the proposal, which Nasdaq filed with the Commission on August 13, 2001,[5] and February 21, 2002, respectively.[6] The Commission is publishing this notice to solicit comments on Amendment Nos. 2 and 3 to the proposed rule change from interested persons.

I. Self-Regulatory Organization's Statement of the Terms of Substance of the Proposed Rule Change

In its original proposal, Nasdaq proposed to amend NASD Rule 4613(e)(1)(C), ''Locked and Crossed Markets,'' to revise the use of Trade-or-Move Messages during locked and crossed market conditions that occur prior to the market's opening and to add provisions relating to the use of Trade-or-Move Messages prior to the market's close. In response to comment letters filed with the Commission and based upon input from a special subcommittee of Nasdaq's Quality of Markets Committee, Nasdaq proposes to amend its original proposal to: (1) Require ECNs to send Trade-or-Move Messages prior to entering locking/crossing quotes and require market makers to send Trade-or-Move Messages after entering locking/crossing quotes; (2) reduce the time to respond to a Trade-or-Move Message to 10 seconds; (3) provide a 10,000-share minimum share requirement for Trade-or-Move Messages for Nasdaq 100 and S&P 400 issues; (4) prohibit all market participants from entering locking/crossing quotes between 9:29:30 a.m. and 9:29:59 a.m.; and (5) delete provisions imposing Trade-or-Move requirements between 3:50 p.m. and 4:00 p.m.

Proposed changes to the original proposal, as published in the February 2001 Release, appear below. Proposed additions are in italics; proposed deletions are in [brackets].

Rule 4613—Character of Quotations

(a)–(d) No change.

(e) Locked and Crossed Markets:

(1) A market maker shall not, except under extraordinary circumstances, enter or maintain quotations in Nasdaq during normal business hours if:

(A) No change.

(B) No change.

(C) Obligations Regarding Locked/Crossed Market Conditions Prior to Market Opening [And Prior to Market Closing]—

(i) No change.

(i) Locked/Crossed Market Between 9:20 and 9:29:59 a.m.—

(a) Before *an ECN* [market maker] enters a quote that would lock or cross the market between 9:20 and 9:29:29 a.m. Eastern Time, the *ECN* [market maker] must first send through SelectNet to the market maker *or ECN* whose quote it would lock or cross a Trade-or-Move Message that is at *or superior to* the receiving market maker's *or ECN's* quoted price [and that is for at least 10,000 shares (if multiple market makers would be locked/crossed, each one must receive a Trade-or-Move Message and the aggregate size of all such messages must be at least 10,000 shares); provided, however, that if a market participant is representing an agency order (as defined in subparagraph (vi) of this rule), the market participant shall be required to send a Trade-or-Move Message in an amount equal to the agency order, even if that order is less than 10,000 shares. A [market maker]. *An ECN* that sends a Trade-or-Move Message during these periods must then wait at least [15]*10* seconds before entering a quote that would lock or cross the market.

(b) If a market maker enters a quote that would lock or cross the market between 9:20 and 9:29:29 a.m. Eastern Time, the market maker must then immediately send through SelectNet to the market maker or ECN whose quote it would lock or cross a Trade-or-Move Message that is at or superior to the receiving market maker's or ECN's quoted price.

(c) Market participants shall be prohibited from entering a quote that would lock or cross the market between 9:29:30 and 9:29:59.

(ii)*(a) In the case of securities included in the Nasdaq 100 Index or the S&P 400 Index, a Trade-or-Move Message must be* [and that is] for at least 10,000 shares (if multiple market makers would be locked/crossed, each one must receive a Trade-or-Move Message and the aggregate size of all such messages must be at least 10,000 shares); provided, however, that if a market participant is representing an agency order (as defined in subparagraph (vi) of this rule), the market participant shall be required to send a Trade-or-Move Message(s) in an amount equal to the agency order, even if that order is less than 10,000 shares.

(b) In the case of all other securities, a Trade-or-Move Message must be for at least 5,000 shares (if multiple market makers would be locked/crossed, each one must receive a Trade-or-Move Message and the aggregate size of all such messages must be at least 5,000 shares); provided, however, that if a market participant is representing an agency order (as defined in subparagraph (vi) of this rule), the market participant shall be required to send a Trade-or-Move Message(s) in an amount equal to the agency order, even if that order is less than 5,000 shares.

[Locked/Crossed Market Between 3:50 and 3:59:59 p.m.—Before a market maker enters a quote that would lock or cross the market between 3:50 and 3:59:59 p.m. Eastern Time, the market maker must first send through SelectNet to the market maker whose quote it would lock or cross, a Trade-or-Move Message that is at the receiving market maker's quoted price and that is for at least 10,000 shares (if multiple market makers would be locked/crossed, each one must receive a Trade-or-Move Message and the aggregate size of all such messages must be at least 10,000 shares); provided, however, that if a market participant is representing an agency order (as defined in subparagraph (vi) of this rule), the market participant shall be required to send a Trade-or-Move Message(s) in an amount equal to the agency order, even if that order is less than 10,000 shares. A market maker that sends a Trade-or-Move Message during this period must then wait at least 15 seconds before entering a quote that would lock or cross the market.]

(iv) A market maker that receives a Trade-or-Move Message must, within [15] *10* seconds of receiving such message, either fill the incoming Trade-or-Move Message for the full size of the message, or [, consistent with its Firm Quote obligations,] move its bid down

Letter''); and letter from William O'Brien, Senior Vice President & General Counsel, The BRUT ECN, L.L.C., (''BRUT'') to the Commission, dated April 17, 2001 (''BRUT Letter'').

[5] *See* letter (with attachment) from Eugene A. Lopez, Senior Vice President, Nasdaq, to Belinda Blaine, Associate Director, Division of Market Regulation (''Division''), Commission, dated August 10, 2001 (''Amendment No. 2''). In Amendment No. 2, Nasdaq responds to the commenters and proposes to revise its original proposal to: (1) Require electronic communications networks (''ECNs'') to send Trade-or-Move Messages prior to entering locking/crossing quotes and require market makers to send Trade-or-Move Messages after entering locking/crossing quotes; (2) reduce the time to respond to a Trade-or-Move Message to 10 seconds; (3) provide a 10,000-share minimum share requirement for Trade-or-Move Messages for Nasdaq 100 and S&P 400 issues; (4) prohibit all market participants from entering locking/crossing quotes between 9:29:30 a.m. and 9:29:59 a.m.; and (5) delete provisions imposing Trade-or-Move requirements between 3:50 p.m. and 4 p.m.

[6] *See* letter from Jeffrey S. Davis, Nasdaq, to John Polise, Senior Special Counsel, Division, Commission, dated February 21, 2002 (''Amendment No. 3''). In Amendment No. 3, Nasdaq responds to comments from BRUT and clarifies a misstatement in Amendment No. 2. Specifically, Amendment No. 3 states that the requirement that ECNs send Trade-or-Move Messages prior to entering locking or crossing quotes applies to all orders that ECNs receive and is not limited to agency orders, as stated incorrectly in Amendment No. 2.

(offer up) by a quotation increment that restores or maintains an unlocked/uncrossed market.

(v) A market maker that sends a Trade-or-Move Message pursuant to subparagraphs (e)(1)(C)(i)[,] *or* (ii)[, or (iii)] of this rule must append to the message a Nasdaq-provided symbol indicating that it is a Trade-or-Move Message.

(vi) No Change.

(2) No Change.

(3) *Except as indicated in subsection (1)(C)(ii)*, [F]for purposes of this rule, the term ''market maker'' shall include:

(A)–(D) No Change.

II. Self-Regulatory Organization's Statement of the Purpose of, and Statutory Basis for, the Proposed Rule Change

In its filing with the Commission, Nasdaq included statements concerning the purpose of, and basis for, the proposed rule change, and discussed any comments it received on the proposed rule change. The text of these statements may be examined at the places specified in Item IV below. Nasdaq has prepared summaries, set forth in Sections A, B, and C below, of the most significant aspects of such statements.

A. Self-Regulatory Organization's Statement of the Purpose of, and Statutory Basis for, the Proposed Rule Change

1. Purpose

(a) Amendment No. 2.

Background

In its original rule proposal, Nasdaq proposed amendments to NASD Rule 4613(e)(1)(C) that would alter the obligations of market makers and ECNs during locked and crossed markets that occur prior to the market's open and also prior to the close. Specifically, Nasdaq originally proposed to: (1) Extend the application of NASD Rule 4613(e)(1)(C)(ii) regarding locked/crossed markets before the open to the period prior to the close; (2) require market makers and ECNs that send a Trade-or-Move Message to do so at least 15 seconds before entering a locking/crossing quote rather than after entering a locking/crossing quote, as the rule currently requires; (3) increase from 5,000 to 10,000 the minimum number of shares that must accompany a non-agency Trade-or-Move Message; and (4) reduce from 30 seconds to 15 seconds the amount of time within which the recipient of a Trade-or-Move Message must properly respond.

The Commission received seven comment letters regarding the original proposal.[7] Nasdaq notes that the commenters, who are among the most active participants in the Nasdaq market, expressed materially different views regarding Nasdaq's proposal. In response to the comment letters, Nasdaq's Quality of Markets Committee formed a subcommittee (''Subcommittee'') to address the concerns raised by the commenters. The Subcommittee was comprised of all of the commenters, as well as members representing other constituencies within the Nasdaq market making community.

At its first meeting, the Subcommittee spent two hours discussing the operation of the Trade-or-Move rule during the pre-opening period. This meeting, like the comment letters, generated significant disagreement regarding the best approach to improving the operation of the rule. Following that meeting, a straw poll of the Subcommittee on four aspects of Trade-or-Move during the pre-opening period revealed no clear majority supporting any proposal on any aspect of NASD Rule 4613(e)(1)(C).

After the first Subcommittee meeting, members of the staff of Nasdaq Transaction Services, Economic Research, Regulation and Controls, Technology Services, and the Nasdaq Office of General Counsel met several times in different groupings to develop a recommendation based upon the Subcommittee deliberations. Nasdaq staff presented its recommendations at the second Subcommittee meeting, where the Subcommittee members spent nearly two hours discussing the pre-opening period and another half-hour discussing the pre-closing period.

Response to Comments

Nasdaq is aware that there remain meaningful, legitimate disagreements within the market making community regarding the best solution to locked and crossed markets that occur on Nasdaq. Nasdaq's goal is to incrementally improve and simplify the operation of and compliance with the Trade-or-Move rule, rather than to pursue an impossible ideal of solving every Trade-or-Move problem experienced by every market participant. The recommendations described in greater detail below are designed to accomplish that goal, as well as to promote price discovery and the maintenance of an orderly market.

Pre-Opening

An orderly opening is critical to Nasdaq and to investors.[8] Nasdaq notes that a sizable portion of the volume in Nasdaq occurs at or around the market's opening. According to Nasdaq, many marker makers guarantee their customers an execution at the opening inside bid or offer price, or in some cases the midpoint of (or other range between) the opening inside bid/inside offer. Thus, the inside market at the opening affects the price at which a sizable number of orders from individual investors in Nasdaq stocks are filled. Moreover, the prices of certain options contracts, indexes, and derivative instruments often are set based on the opening prints in Nasdaq. Accordingly, it is of utmost importance that the market open in an orderly fashion.

As discussed more fully below, Amendment No. 2 revises the proposal to eliminate the use of Trade-or-Move Messages prior to the market's close. In addition, Amendment No. 2 modifies the following aspects of the original proposal with regard to the way that Trade-or-Move operates prior to the opening: (1) The sequence of Trade-or-Move Messages; (2) the time within which to respond to a Trade-or-Move Message; (3) the number of shares accompanying a Trade-or-Move Message; and (4) the period between 9:29:30 a.m. and 9:29:59 a.m.

Sequence of Messages: Under current NASD Rule 4613(e)(1)(C), a market participant that enters a locking or crossing quote between 9:20 and 9:29:59 a.m. is then required to send a message with an appended Trade-or-Move designator to the party or parties it is locking/crossing. Nasdaq adopted the Trade-or-Move requirements because it believed that requiring market participants to lock/cross the market prior to sending a Trade-or-Move Message would reduce the frequency and severity of pre-opening locked and crossed markets by providing more informative quotation information and facilitating price discovery.

In its original proposal, Nasdaq proposed to revise NASD Rule 4613(e)(1)(C) to require all market participants to send Trade-or-Move Messages before rather than after entering a locking or crossing quotation during the applicable periods. Nasdaq believed that switching the sequence of messages in this way would further reduce the instances of locked and crossed markets in Nasdaq by

[7] *See* note 4, *supra.*

[8] *See* Arthur Levitt, Chairman, Commission, Remarks before the Securities Industry Association, Boca Raton, Florida (November 4, 1999).

preventing them from occurring in the first instance. Nasdaq believed that the benefits of preventing the occurrence of locked/crossed markets would outweigh the concomitant loss of price discovery provided by the entry of locking or crossing quotes.

Two commenters opposed the proposed change of sequence, claiming that the current sequence results in a one-step process that can be readily programmed into firms' automated trading systems,[9] while the opposite sequence would result in a two-step process that would be difficult to program. According to these commenters, the programming of automated systems improves firms' compliance with the Trade-or-Move requirements and their ability to surveil for compliance internally. These commenters also claimed that the change of sequence would result in more locked or crossed markets, not fewer, as Nasdaq believed.

Two commenters argued that reversing the sequence of messaging would unduly hinder price discovery because the recipient of a Trade-or-Move Message would not know the price to which it would be required to move its quote to maintain an unlocked/uncrossed market.[10] They further argued that decimalization would exacerbate this problem by permitting the recipients of Trade-or-Move Messages to move their quotes in penny increments rather than in sixteenths. Nasdaq maintains that these arguments are based upon the incorrect assumption that market participants can send Trade-or-Move Messages only to the recipient's quoted price (*i.e.,* to lock the market). In fact, a party sending a Trade-or-Move Message may send the Trade-or-Move Message at the recipient's quoted price *or at a superior price.*[11] In that case, the recipient would be required to trade in full or to move its quote beyond the superior price to maintain an unlocked and uncrossed market.

Two other commenters, both operators of ECNs, supported the proposed change of sequence.[12] One commenter argued that the current rule has a disproportionately negative effect on ECNs because it requires them to stand willing to trade twice for every Trade-or-Move Message they send: once with the participant to which it routes the message, and again with any participant that attempts to access its quote.

Nasdaq notes that because ECNs choose not to accumulate proprietary positions, they are unwilling to accept the risk of double execution. Nasdaq states that while a neutral application of the Trade-or-Move requirements may affect market participants differently, that result stems from the ECNs' voluntary selection of a particular business model and access methodology rather than from any action of Nasdaq. Nasdaq also notes that market makers risk similar double liability from internalization and orders from non-Nasdaq means of access. Nasdaq maintains that its decision to switch the message sequence, like its decision to adopt the existing Trade-or-Move requirements, was based upon Nasdaq's assessment of the benefit of the Trade-or-Move requirements to the entire market rather than their impact on particular market participants or business models.

Nonetheless, based upon the comments received, Nasdaq has decided to amend its proposal to permit the sequence of messaging to differ by market participant business model. Amendment No. 2 will revise the proposal to require ECNs to send Trade-or-Move Messages before entering locking or crossing quotes. Market makers will enter a locking or crossing quote and then immediately send a Trade-or-Move Message.[13] Nasdaq believes that the proposed change has the dual benefit of permitting ECNs to participate more effectively in the pre-opening period and also permitting market makers to retain their current automated systems. It also preserves the benefits that Nasdaq sought to achieve when it first implemented the Trade-or-Move requirements, namely increased price discovery and decreased gamesmanship surrounding the occurrence and resolution of locked and crossed markets. Nasdaq believes that this approach will incrementally improve the operation of NASD Rule 4613(e)(1)(C).[14]

Response Time: Under current NASD Rule 4613(e)(1)(C), the recipient of a Trade-or-Move Message must respond properly to the message within 30 seconds. In the original proposal, Nasdaq reduced the response time to 15 seconds to reduce the duration of locked/crossed markets that occur. Nasdaq believes that markets have become materially faster and that a 30-second delay in price discovery is impractical under the current, rapid conditions. The commenters unanimously agreed that a 30-second response time is too long and that 15 seconds is more appropriate.[15] In fact, two commenters suggested reducing the response time to five seconds.[16]

Nasdaq is reluctant to reduce the response time to five seconds because that would impose a great burden on firms that lack automated systems. Nasdaq is also concerned that the operation and surveillance of a five-second rule could be compromised by potential delays in network communications between Nasdaq's systems and firms' systems.

To balance Nasdaq's desire to respond to the increased speed of markets as well as the potential burden imposed on non-automated firms, Nasdaq proposes to reduce to 10 seconds the time permitted to respond to a Trade-or-Move Message. Although this is a relatively brief period for non-automated participants, Nasdaq believes that firms that choose to participate in the pre-open must vigilantly monitor their quotes. As explained in greater detail below, the 10-second period corresponds to the minimum life of a SelectNet order, thereby allowing ECNs to avoid dual liability by canceling a Trade-or-Move Message when entering a locking or crossing quote.

Number of Shares: Under current NASD Rule 4613(e)(1)(C), the aggregate size of the Trade-or-Move Message must be at least 5,000 shares (*i.e.,* the market participant must send a total of 5,000 shares to all parties it is locking/crossing) in the case of a proprietary quote, or the actual size of an agency order if that is the basis for the locking/crossing quote. Under the original proposal, Nasdaq sought to raise the minimum Trade-or-Move Message share requirement to 10,000 shares or the

[9] *See* Schwab Letter and NDB Letter, *supra* note 4.

[10] *See* Schwab Letter and NDB Letter, *supra* note 4.

[11] Although Nasdaq announced this interpretation of NASD Rule 4613(e) in NASD Notice to Members 2000–29, Nasdaq notes that there appears to be some confusion concerning this point among market makers. Accordingly, Nasdaq is adding language to the current proposal to further clarify this point.

[12] *See* Archipelago Letter and Bloomberg Letter, *supra* note 4.

[13] ''Immediate'' issuance of a Trade-or-Move Message will be understood to mean instantaneous in the case of automated systems and not exceeding a different, specified period where manual processes are utilized.

[14] The STA also supported changing the sequence of messages, contending that doing so would reduce the instances of locked and crossed markets in Nasdaq. Based upon the STA's comments and upon Nasdaq's own desire to reduce the instances of locked/crossed markets, Nasdaq also considered permitting each market participant to choose the sequence of messages that it preferred. After careful analysis, Nasdaq concluded that this approach would create confusion in the marketplace and hinder Nasdaq's ability to surveil for compliance with the Trade-or-Move requirements.

[15] *See* Bloomberg Letter; Archipelago Letter; Schwab Letter; and NDB Letter, *supra* note 4.

[16] *See* STA Letter and Knight Letter, *supra* note 4.

actual size of an agency order. Nasdaq believes that a market participant or its customer should not be able to lock or cross the market in the 10 minutes prior to the opening with a de minimus number of shares. Rather, Nasdaq believes that a market participant must be willing to risk significant capital and to trade a significant amount if it wishes to lock or cross the market during one of the most critical points in the trading day.

Several commenters supported the proposed increase and agreed with the rationale behind it.[17] In fact, the STA suggested that, in certain circumstances, the minimum Trade-or-Move Message share size should be 25,000 shares rather than 10,000 shares. One commenter stated that the requirement should remain at 5,000 shares due, in part, to what the commenter believes is non-compliance with the Trade-or-Move requirements by certain regional markets and NASD members.[18]

On the other hand, one commenter claimed that the 10,000-share requirement discriminates unfairly against ECNs and effectively prevents them from participating in the pre-opening.[19] The commenter suggested that Nasdaq address this issue by permitting ECNs to withhold from a Trade-or-Move Message a portion of an agency order rather than requiring the ECN to append the entire amount of the order to the Trade-or-Move Message it wishes to send. The ECN would then use the shares withheld to enter a locking or crossing quote.

Nasdaq disagrees with this argument. Contrary to the commenter's assertions, the minimum share requirement and agency exception each apply evenly to all market makers and ECNs, and also to their respective customers. The proposal simply prohibits any market participant from locking or crossing the market on a proprietary basis—regardless of the conduit through which it enters an order into the market—for less than the minimum number of shares. In fact, to do as the commenter suggests and permit ECNs to withhold a portion of their agency orders would itself create disparity between market makers and ECNs. Such an approach would be inconsistent with Nasdaq's view that, to the greatest extent possible, the lock/crossed rule should apply equally to all market participants.

Nasdaq also disagrees that the current rule operates to exclude ECNs from the pre-opening period, as evidenced by several ECNs' current participation. Moreover, Nasdaq believes that the modifications described above will ameliorate the ECNs' concerns. Specifically, Nasdaq believes that allowing ECNs to send a Trade-or-Move Message before locking/crossing the market and reducing the response time to 10 seconds should virtually eliminate the risk to an ECN of assuming a proprietary position. For example, Nasdaq notes that an ECN could send Trade-or-Move Message for the actual size of an agency order and wait 10 seconds, the minimum life of a SelectNet order. Assuming that the ECN receives no reply, it could then cancel the SelectNet order and enter the full size of its agency order as a locking/crossing quote.

Nonetheless, in light of the comments received, Nasdaq has determined to modify the proposal as follows: proprietary orders with Trade-or-Move Messages must be accompanied by a minimum of 10,000 shares in the case of Nasdaq 100 and S&P 400 issues, and 5,000 shares for all other issues. The ''agency exception'' contained in current NASD Rule 4613(e)(1)(C) will continue to operate as it does today. Nasdaq believes that Nasdaq 100 and S&P 400 issues are marked by higher liquidity and faster trading and, therefore, merit a more stringent requirement to create a locked or crossed market. Nasdaq believes that this proposal proportionately increases the economic significance of entering a locking/crossing quotation for stocks that are widely followed and for which a locked/crossed market would have the greatest impact.

Limited Prohibition On Entry Of Locking/Crossing Quotes: Based upon the recommendation of the Subcommittee, which was comprised of the commenters and additional members of the Quality of Markets Committee, Nasdaq proposes that market participants be prohibited by rule from entering a locking or crossing quote between 9:29:30 and 9:29:59. During that period, all market participants will be permitted to send Trade-or-Move Messages for the required number of shares to parties that they would lock or cross if permitted to enter such locking/crossing quotes. Market participants that receive Trade-or-Move Messages during that time period will be obligated to respond properly by trading in full or moving their quote within the appropriate response time.

Nasdaq believes that a prohibition on the entry of locking/crossing quotes immediately prior to the market opening, in conjunction with the continued obligation to respond properly to Trade-or-Move Messages, will facilitate the resolution of locks and crosses that exist at 9:29:30. Further, Nasdaq believes that the potential benefits to all market participants of a more orderly opening outweigh the limited loss of price discovery that will result from suppressing locking and crossing quotes during this brief but critical period.

Pre-Closing

NASD Rule 4613(e)(1)(C) does not currently apply during normal business hours. Based upon the positive effect that the Trade-or-Move requirements have had on resolving potential locked and crossed markets at and immediately before the market opening, Nasdaq originally proposed to expand the application of NASD Rule 4613(e)(1)(C) to include the 10-minute period preceding the market close (3:50 p.m. to 3:59:59 p.m.). Like the opening, the closing is a critical period characterized by volatile, rapid, and heavy trading. The closing price is a benchmark for numerous transactions and could be affected dramatically by the existence of locks and crosses.

In its original proposal, Nasdaq proposed that the Trade-or-Move Messages used prior to the close would operate in the same manner as currently proposed for Trade-or-Move Messages used prior to the opening, with one exception. Prior to the market's opening, the market participant receiving a Trade-or-Move Message has no liability under the NASD's firm quote rule (NASD Rule 4613(b)) or under the Commission's firm quote rule (Exchange Act Rule 11aAc–1). Thus, a market maker is permitted to move its quote without trading upon the receipt of what, during market hours, would be a SelectNet ''liability'' order. Prior to the close, however, a Trade-or-Move Message would be considered a liability order. Therefore, unlike during the earlier period, a market participant that received a Trade-or-Move Message prior to the close could move its quote or trade with just a portion of the Trade-or-Move Message only if doing so would be consistent with its firm quote obligations under the NASD and SEC rules.

The commenters argued overwhelmingly that applying the Trade-or-Move requirements before the close would be unnecessary or would cause more problems than they would solve. Several commenters argued that the implementation of Nasdaq's National Market Execution System (''SuperSOES'') would obviate the need for supplemental locked and crossed

[17] *See* NDB Letter and Schwab Letter, *supra* note 4.

[18] *See* Knight Letter, *supra* note 4.

[19] *See* Bloomberg Letter, *supra* note 4.

markets restrictions or, at the very least, that Nasdaq should monitor the implementation of SuperSOES to determine whether or not this claim is accurate.[20] Another commenter noted that the proposal fails to account for economic inefficiencies that exist prior to the close.[21] No commenter expressed support for the proposal to implement Trade-or-Move requirements prior to the market close.

In light of the comments received and the implementation of SuperSOES, Nasdaq has decided to withdraw its proposal to expand the application of NASD Rule 4613(e)(1)(C) to the period prior to the closing. Nasdaq will monitor the effect of SuperSOES at the close and will, at a later date, reevaluate whether applying the Trade-or-Move requirements at the close would materially reduce the instances and duration of locked and crossed markets in Nasdaq.

(b) Amendment No. 3.

One commenter suggested that Nasdaq revise the Trade-or-Move requirements to provide that, for purposes of the Trade-or-Move rule, all ECN orders be treated as agency orders.[22] The commenter asserted that the change was necessary because an ECN could incur principal liability when routing a Trade-or-Move Message where the underlying subscriber order was for a size smaller than the required minimum message size. The commenter maintained that the proposal would materially increase the principal liability risk to ECNs by doubling the minimum Trade-or-Move Message size requirement from 5,000 shares to 10,000 shares.

In response, Nasdaq asserts that permitting market makers to transform their orders into agency orders by sending them to an ECN would undermine the progress that the Trade-or-Move requirements have made towards eliminating locked and crossed markets in Nasdaq.[23] In addition, Nasdaq maintains that the benefit to the overall market of raising the minimum Trade-or-Move Message size requirement for certain stocks outweighs the risk the commenter perceives. Nasdaq notes that under the proposal, as amended, the 10,000-share Trade-or-Move Message requirement applies only to the most active, liquid stocks in the market, and that a smooth opening for these stocks is critical to investors.[24] Nasdaq also states that some ECNs have implemented systems to differentiate between agency and principal order flow from market makers.[25]

2. Statutory Basis

Nasdaq believes that the proposed rule change is consistent with the provisions of section 15A(b)(6) and section 11A of the Exchange Act. Section 15A(b)(6) requires that the rules of a registered national securities association are designed to prevent fraudulent and manipulative acts and practices, to promote just and equitable principals of trade, to foster cooperation and coordination with persons engaged in regulating, clearing, settling, processing information with respect to, and facilitating transactions in securities, to remove impediments to and perfect the mechanism of a free and open market and a national market system, and, in general, to protect investors and the public interest; and are not designed to permit unfair discrimination between customers, issuers, brokers, or dealers. Section 11A(a)(1)(C) provides that is in the public interest and appropriate for the protection of investors and the maintenance of fair and orderly markets to assure: (1) Economically efficient execution of securities transactions; (2) fair competition among brokers and dealers; (3) the availability to brokers, dealers and investors of information with respect to quotations and transactions in securities; (4) the practicability of brokers executing investors orders in the best market; and (5) an opportunity for investors orders to be executed without the participation of a dealer.

Nasdaq believes that the proposed amendments to NASD Rule 4613(e) are consistent with sections 15A(b)(6) and 11A(a)(1)(C) of the Exchange Act. By attempting to resolve locks and crosses at the market opening, the proposed amendments foster cooperation and coordination with members. The proposal also ensures the fair and orderly operation of Nasdaq and the protection of investors, as its purpose is to limit the disruptions to the Nasdaq market and the potential for harm to investors.

B. Self-Regulatory Organization's Statement on Burden on Competition

Nasdaq does not believe that the proposed rule change will result in any burden on competition that is not necessary or appropriate in furtherance of the purposes of the Exchange Act.

C. Self-Regulatory Organization's Statement on Comments on the Proposed Rule Change Received from Members, Participants, or Others

See response to written comments above.

III. Date of Effectiveness of the Proposed Rule Change and Timing for Commission Action

Within 35 days of the date of publication of this notice in the **Federal Register** or within such longer period (i) as the Commission may designate up to 90 days of such date if it finds such longer period to be appropriate and publishes its reasons for so finding or (ii) as to which the Exchange consents, the Commission will:

(A) By order approve such proposed rule change, or

(B) Institute proceedings to determine whether the proposed rule change should be disapproved.

IV. Solicitation of Comments

Interested persons are invited to submit written data, views, and arguments concerning the foregoing, including whether Amendment Nos. 2 and 3 are consistent with the Exchange Act. Persons making written submissions should file six copies thereof with the Secretary, Securities and Exchange Commission, 450 Fifth Street, NW., Washington, DC 20549–0609. Copies of the submission, all subsequent amendments, all written statements with respect to the proposed rule change that are filed with the Commission, and all written communications relating to the proposed rule change between the Commission and any person, other than those that may be withheld from the public in accordance with the provisions of 5 U.S.C. 552, will be available for inspection and copying in the Commission's Public Reference Room. Copies of such filing will also be available for inspection and copying at the principal office of the NASD. All submissions should refer to file number SR–NASD–00–76 and should be submitted by April 1, 2002.

[20] *See* NDB Letter; Schwab Letter; Archipelago Letter, *supra* note 4.

[21] *See* Knight Letter, *supra* note 4.

[22] *See* BRUT Letter, *supra* note 4. NASD Rule 4613(e)(1)(C)(iv) states that, for purposes of that rule, an 'agency order' means an order(s) that is for the benefit of the account of a natural person executing securities transactions with or through or receiving investment banking services from a broker/dealer, or for the benefit of an 'institutional account' as defined in NASD Rule 3110. An agency order shall not include an order(s) that is for the benefit of a market maker in the security at issue, but shall include an order(s) that is for the benefit of a broker/dealer that is not a market maker in the security at issue.''

[23] *See* Amendment No. 3, *supra* note 6.

[24] *See* Amendment No. 3, *supra* note 6.

[25] *See* Amendment No. 3, *supra* note 6.

For the Commission, by the Division of Market Regulation, pursuant to delegated authority.[26]

Jill M. Peterson,

Assistant Secretary.

[FR Doc. 02–5816 Filed 3–8–02; 8:45 am]

BILLING CODE 8010–01–P

SECURITIES AND EXCHANGE COMMISSION

[Release No. 34–45285A; File No. SR–NASD–2001–93]

Self-Regulatory Organizations; Notice of Filing and Immediate Effectiveness of Proposed Rule Change by National Association of Securities Dealers, Inc. Relating to Fees Associated with the Nasdaq Application of the Primex Auction System™; Correction

March 5, 2002.

Pursuant to section 19(b)(1) of the Securities Exchange Act of 1934 (''Act''),[1] and Rule 19b-4 thereunder,[2] notice is hereby given that on December 17, 2001, the National Association of Securities Dealers, Inc., (''NASD'' or ''Association'') through its subsidiary The Nasdaq Stock Market, Inc. (''Nasdaq''), filed with the Securities and Exchange Commission (''SEC'' or ''Commission'') the proposed rule change as described in Items I, II, and III below, which Items have been prepared by Nasdaq. Nasdaq has designated this proposal as one constituting a fee filing under section 19(b)(3)(A) of the Act, which renders the rule effective upon the Commission's receipt of this filing. Nasdaq will not assess fees pursuant to this fee schedule for approximately the first three months after the Nasdaq application of the Primex Auction System (''Primex'' or ''System'') is operational.[3] Nasdaq intends to begin assessing fees pursuant to this fee schedule beginning on April 1, 2002. However, Nasdaq will issue a Head Trader Alert to notify users of the exact date it will begin assessing fees.

On December 17, 2001, Nasdaq filed Amendment No. 1 to the proposed rule change.[4] Amendment No. 1 corrects the numbering of the footnotes in the narrative portion of the filing and changes the text of the fee schedule to provide that revenue sharing amounts will be paid on a monthly basis. The changes made by Amendment No. 1 were inadvertently omitted from the notice regarding filing and immediate effectiveness of the proposed rule change that the Commission published on January 24, 2002.[5] Accordingly, the Commission is publishing this corrected notice to solicit comments on the proposed rule change, as amended, from interested persons.

I. Self-Regulatory Organization's Statement of the Terms of Substance of the Proposed Rule Change

Nasdaq is proposing to amend NASD Rule 7010 to establish the fee schedule for Nasdaq's application of the Primex Auction System.™ Below is the text of the proposed rule change, as amended. Proposed new language is in *italics.*

7010. System Services

(a)–(q) No changes.

(r) Nasdaq Application of the Primex Auction System™

The following charges shall apply to the use of the Nasdaq Application of the Primex Auction System:

(1) *Transaction Charges:*

Execution Services —for all participants:

- *Order entry—No fee*
- *Auction Response—per share, per execution—$5.00 maximum).* $.01*

Matching Rights—Primex Auction Market Makers (PAMMs) only:

- *50 Percent Match—No fee*
- *Two-Cent Match (per share, per retained order—$2.50 Maximum).** $.0025*

Revenue Sharing—PAMMs only

- Each order executed:***—⅓ of transaction fee

(2) Monthly Access fees

Software

- *Workstation license or unique logon—Per workstation logon*

Stations/logons 1—10—$200
Stations/logons 11—25—$100
Stations/logons 26 and above—$50

- *Proprietary interface license Per license—*

API specification $500—
FIX (customized protocol)—$500

Network

- *Dedicated line—Per line—*

256K primary with backup—$1,564

- *Installation/Uninstall—$1,000 per Nasdaq Staff site visit*

* * * * *

II. Self-Regulatory Organization's Statement of the Purpose of, and Statutory Basis for, the Proposed Rule Change

In its filing with the Commission, Nasdaq included statements concerning the purpose of and basis for the proposed rule change and discussed any comments it received on the proposed rule change. The text of these statements may be examined at the places specified in Item IV below. Nasdaq has prepared summaries, set forth in Sections A, B, and C below, of the most significant aspects of such statements.

A. Self-Regulatory Organization's Statement of the Purpose of, and Statutory Basis for, the Proposed Rule Change

1. Purpose

On August 17, 2001, Nasdaq filed a Form PILOT to commence operation of the Primex system.[6] The System is designed to replicate, in an electronic form, the competitive trading crowd that is associated with an auction market. The System is completely voluntary and available to any NASD member in good standing. Non-NASD members can access the System through an NASD member that subscribes to Primex. Members that desire access to the System must execute the necessary agreements with Nasdaq. Members granted access to the System are referred to as Participants. There are two types of Participants in Primex: (1) Crowd Participants, and (2) Primex Auction Market Makers (''PAMMs.'')

By becoming a Participant, members automatically receive the right to trade as Crowd Participants. Crowd Participants can view all orders exposed in the System; interact with any order put to auction by responding to the auction using all of the System's response tools; submit orders to be

[26] 17 CFR 200.30–3(a)(12).

[1] 15 U.S.C. 78s(b)(1).

[2] 17 CFR 240.19b–4.

[3] As described above, Nasdaq will not assess any fees pursuant to the fee schedule during the initial few months the System is operating, which also means Nasdaq will not share any transaction fees in accordance with the fee schedule during such period. However, Primex Trading N.A., L.L.C., an entity independent of Nasdaq and the licensor of the System, has indicated it will pay any revenue sharing amounts earned by participants during such period.

[4] *See* letter from Peter R. Geraghty, Associate General Counsel, Nasdaq, to John Polise, Senior Special Counsel, Division of Market Regulation (''Division''), Commission, dated December 17, 2001.

[5] *See* Securities Exchange Act Release No. 45285 (January 15, 2002), 67 FR 3521.

* *This fee applies to both Indications and ''real-time'' Responses. When two orders match directly, a fee is charged to the party that entered the second order.*

** *This fee is charged in the event a PAMM attaches its matching right to an order, and the crowd offers two cents or less price improvement to that order.*

*** *Paid to a PAMM when it enters an order that interacts with crowd interest in the system. Revenue sharing applies only to orders in those securities in which the firm is registered as a PAMM. The revenue sharing amounts will be paid on a monthly basis.*

[6] The Form PILOT was amended on November 26, 2001. *See* Letter from Peter R. Geraghty, Associate General Counsel, Nasdaq, to John Polise, Senior Special Counsel, Division, Commission, dated November 26, 2001.

auctioned; and trade as principal, agent, or riskless principal. Crowd Participants can interact with orders being auctioned by submitting Indications, which are instructions to the System that can reside within the System and automatically respond in a certain manner to an auction if and when orders put to auction are available, or by submitting a Response. A Response is an individual instruction that is entered and responds in ''real time'' to orders being auctioned. A firm that elects to register as a PAMM has the same rights and entitlements as Crowd Participants, but because they elect to meet other additional qualifications,[7] PAMMS are entitled to additional privileges. For example, PAMMS are entitled to use the System's automated Match Parameters allowing them to participate in the execution of their own customer orders submitted to the System (*e.g.,* the Two Cent Match Parameter[8] or the 50% Match Parameter[9]). PAMMs also are entitled to revenue sharing, allowing PAMMs to share in the transaction fee paid by other participants when such participants execute against an order submitted to auction by a PAMM.

Nasdaq will impose monthly fees to access the System. These fees vary based on the method chosen by the Participant to access the System. The System will operate on a network that is independent from Nasdaq's other existing systems (*e.g.,* SuperSoes$_{SM}$). Primex Participants will be charged a monthly fee for this independent network. In addition, Participants will be charged for each visit by Nasdaq staff to install, or uninstall, software or hardware necessary to access the System.

In addition to monthly charges, Nasdaq will impose fees based on orders executed through the System. As set forth in the schedule of fees, no fee is charged for submitting an order to auction, and in general no fee is charged to have such orders executed.[10] Execution fees are only charged against Participants that extract liquidity by responding to, and executing against, orders submitted for auction. This execution fee is a penny per share with a maximum charge of $5.00 per execution. Accordingly, the fee would be charged to a Participant for any execution resulting from that Participant's Indication or real-time Response that interacted with an order put to auction.

In addition, and as discussed above, PAMMs have the option of attaching certain matching rights on orders they submit to the System. Nasdaq will impose a fee when a PAMM utilizes the Two-Cent Match feature and retains an order for execution. In such circumstances, the PAMM will be charged $.0025 per share, with a $2.50 maximum per retained order. If the PAMM does not retain the order because the order is executed against the Crowd Participant(s) who has offered more that two cents of price improvement, there is no charge to the PAMM. Instead, Nasdaq will share with the PAMM one-third of the transaction fee collected for such transaction. Nasdaq has decided to share the transaction fee in these circumstances to encourage PAMMS to submit orders for auction in the System. The revenue sharing amounts will be paid on a monthly basis.

2. Statutory Basis

Nasdaq believes that the proposed rule change is consistent with the provisions of section 15A(b)(5) of the Act[11] in that the proposed fees provide for the equitable allocation of reasonable fees among members. The fees apply equally to all Participants in the System, based upon the category the member has chosen to participate in the System. All members in the same category of Participant (e.g., PAMM) are subject to the same fees.

B. Self-Regulatory Organization's Statement on Burden on Competition

Nasdaq does not believe that the proposed rule change will result in any burden on competition that is not necessary or appropriate in furtherance of the purposes of the Act.

C. Self-Regulatory Organization's Statement on Comments on the Proposed Rule Change Received from Members, Participants, or Others

Written comments were neither solicited nor received.

III. Date of Effectiveness of the Proposed Rule Change and Timing for Commission Action

The foregoing rule change, as amended, has become effective upon filing pursuant to section 19(b)(3)(A) of the Act[12] and paragraph (f)(2) of Rule 19b–4 thereunder[13] in that it establishes the fee schedule for the use of a Nasdaq system.

At any time within 60 days of the filing of the proposed rule change, the Commission may summarily abrogate the rule change if it appears to the Commission that such action is necessary or appropriate in the public interest, for the protection of investors, or otherwise in furtherance of the purposes of the Act.

IV. Solicitation of Comments

Interested persons are invited to submit written data, views, and arguments concerning the foregoing, including whether the proposed rule change, as amended, is consistent with the Act. Persons making written submissions should file six copies thereof with the Secretary, Securities and Exchange Commission, 450 Fifth Street, NW, Washington, DC 20549–0609. Copies of the submission, all subsequent amendments, all written statements with respect to the amended proposed rule change that are filed with the Commission, and all written communications relating to the proposed rule change between the Commission and any person, other than those that may be withheld from the public in accordance with the provisions of 5 U.S.C. 552, will be available for inspection and copying in the Commission's Public Reference Room. Copies of such filing will also be available for inspection and copying at the principal office of the NASD. All submissions should refer to the file

[7] The requirements to be become and maintain registration as a PAMM are contained in NASD Rule 5020. In general, a PAMM for a particular security eligible for trading in the System must be either: (1) A Nasdaq market maker in the security, if the security is listed on Nasdaq; or (2) a Consolidated Quotation System market maker, if the security is listed on an exchange. PAMMs may retain their PAMM status for a prospective calendar quarter provided they had qualified by submitting to the System a minimum percentage of certain order-types in the previous calendar quarter, as detailed in NASD Rule 5020. There never is any requirement for participants to register as a PAMM or to submit any amount of orders at any time.

[8] A complete description of the matching parameters and their operation are contained in NASD Rule 5014. Generally, however, when a PAMM submits an order to the System with the Two Cent Match parameter, and there is interest from the Crowd that can satisfy the order, the order entered with the Two Cent Match will be executed against such interest by the Crowd during its exposure, provided that such Crowd interest offers to provide price improvement greater than two cents superior to the best quote publicly displayed in the National Best Bid/Offer (''NBBO'') at the time such Crowd interest is available.

[9] Generally, when a PAMM submits an order to the System with the 50% Match parameter, the order will be executed against any interest by the Crowd that satisfies the order during its exposure at the price(s) and size of such Crowd interest, for no more than 50% of the order. Any execution with the Crowd will immediately cause the System to provide the order with an additional execution of like size and price against the PAMM that entered the order.

[10] The one exception is where an order submitted to auction directly meets and interacts with another order submitted to auction, in which case the second order is treated as a Response, and is charged a fee accordingly.

[11] 15 U.S.C. 78k–1(b)(5).

[12] 15 U.S.C. 78s(b)(3)(A).

[13] 17 CFR 240.19b–4(f)(2).

number SR-NASD–2001–93 and should be submitted by April 1, 2002.

For the Commission, by the Division of Market Regulation, pursuant to delegated authority.[14]

Jill M. Peterson,

Assistant Secretary.

[FR Doc. 02–5817 Filed 3–8–02; 8:45 am]

BILLING CODE 8010–01–P

DEPARTMENT OF STATE

[Public Notice 3941]

Culturally Significant Objects Imported for Exhibition Determinations: ''The Art and Politics of Arthur Szyk''

AGENCY: United States Department of State.

ACTION: Notice.

SUMMARY: Notice is hereby given of the following determinations: Pursuant to the authority vested in me by the Act of October 19, 1965 (79 Stat. 985; 22 U.S.C. 2459), Executive Order 12047 of March 27, 1978, the Foreign Affairs Reform and Restructuring Act of 1998 (112 Stat. 2681, *et seq.*; 22 U.S.C. 6501 note, *et seq.*), Delegation of Authority No. 234 of October 1, 1999 (64 FR 56014), and Delegation of Authority No. 236 of October 19, 1999 (64 FR 57920), as amended, I hereby determine that the objects to be included in the exhibition, ''The Art and Politics of Arthur Szyk,'' imported from abroad for temporary exhibition within the United States, are of cultural significance. These objects are imported pursuant to a loan agreement with a foreign lender. I also determine that the exhibition or display of the exhibit objects at the United States Holocaust Memorial Museum, Washington, DC, from on or about April 11, 2002, to on or about October 14, 2002, and at possible additional venues yet to be determined, is in the national interest. Public Notice of these determinations is ordered to be published in the **Federal Register**.

FOR FURTHER INFORMATION CONTACT: For further information, including a list of exhibit objects, contact Paul W. Manning, Attorney-Adviser, Office of the Legal Adviser, 202/619–5997, and the address is United States Department of State, SA–44, Room 700, 301 4th Street, SW., Washington, DC 20547–0001.

[14] 17 CFR 200.30–3(a)(12).

Dated: March 1, 2002.

Patricia S. Harrison,

Assistant Secretary for Educational and Cultural Affairs, United States Department of State.

[FR Doc. 02–5769 Filed 3–8–02; 8:45 am]

BILLING CODE 4710–08–P

DEPARTMENT OF STATE

[Public Notice 3942]

Notice of Proposal To Extend U.S.-Guatemala Memorandum of Understanding

AGENCY: Department of State.

ACTION: Notice of Proposal to Extend U.S.-Guatemala.

Memorandum of Understanding

The Government of the Republic of Guatemala has indicated its interest in an extension of the *Memorandum of Understanding between the Government of the United States of America and the Government of the Republic of Guatemala Concerning the Imposition of Import Restrictions on Archaeological Objects and Materials from the Pre-Columbian Cultures of Guatemala,* signed on September 29, 1997. Pursuant to the authority vested in the president's designee under Department of State Delegation of Authority No. 236–3, and pursuant to the requirement under 19 U.S.C. 2602(f)(1), an extension of this MOU is hereby proposed. Pursuant to 19 U.S.C. 2602(f)(2), the views and recommendations of the Cultural Property Advisory Committee regarding this proposal will be requested.

A copy of this Memorandum of Understanding, the designated list of restricted categories of material, and related information can be found at the following Web site: *http://exchanges.state.gov/education/culprop.*

Dated: March 5, 2002.

Patricia S. Harrison,

Assistant Secretary for Educational and Cultural Affairs, Department of State.

[FR Doc. 02–5767 Filed 3–8–02; 8:45 am]

BILLING CODE 4710–11–P

OFFICE OF THE UNITED STATES TRADE REPRESENTATIVE

Determinations Under the African Growth and Opportunity Act

AGENCY: Office of the United States Trade Representative.

ACTION: Notice.

SUMMARY: The United States Trade Representative (USTR) has determined that Cameroon has adopted an effective visa system and related procedures to prevent unlawful transshipment and the use of counterfeit documents in connection with shipments of textile and apparel articles and has implemented and follows, or is making substantial progress toward implementing and following, the customs procedures required by the African Growth and Opportunity Act (AGOA). Therefore, imports of eligible products from Cameroon qualify for the textile and apparel benefits provided under the AGOA.

DATES: Effective March 1, 2002.

FOR FURTHER INFORMATION CONTACT: Chris Moore, Director for African Affairs, Office of the United States Trade Representative, (202) 395–9514.

SUPPLEMENTARY INFORMATION: The AGOA (Title I of the Trade and Development Act of 2000, Pub. L. 106–200) provides preferential tariff treatment for imports of certain textile and apparel products of beneficiary sub-Saharan African countries. The textile and apparel trade benefits under the AGOA are available to imports of eligible products from countries that the President designates as ''beneficiary sub-Saharan African countries,'' provided that these countries (1) have adopted an effective visa system and related procedures to prevent unlawful transshipment and the use of counterfeit documents, and (2) have implemented and follow, or are making substantial progress toward implementing and following, certain customs procedures that assist the Customs Service in verifying the origin of the products.

In Proclamation 7350 (Oct. 2, 2000), the President designated Cameroon as a ''beneficiary sub-Saharan African country.'' Proclamation 7350 delegated to the United States Trade Representative the authority to determine whether designated countries have met the two requirements described above. The President directed the USTR to announce any such determinations in the **Federal Register** and to implement them through modifications of the Harmonized Tariff Schedule of the United States (HTS). Based on actions that Cameroon has taken, I have determined that Cameroon has satisfied these two requirements.

Accordingly, pursuant to the authority vested in the USTR by Proclamation 7350, U.S. note 7(a) to subchapter II of chapter 98 of the HTS and U.S. note 1 to subchapter XIX of chapter 98 of the HTS are each modified by inserting ''Cameroon'' in alphabetical sequence in the list of countries. The foregoing modifications to the HTS are

effective with respect to articles entered, or withdrawn from warehouse for consumption, on or after the effective date of this notice. Importers claiming preferential tariff treatment under the AGOA for entries of textile and apparel articles should ensure that those entries meet the applicable visa requirements. *See Visa Requirements Under the African Growth and Opportunity Act* 66 FR 7837 (2001).

Robert B. Zoellick,

United States Trade Representative.

[FR Doc. 02–5766 Filed 3–8–02; 8:45 am]

BILLING CODE 3190–01–M

DEPARTMENT OF TRANSPORTATION

Federal Aviation Administration

Aviation Rulemaking Advisory Committee; Aircraft Certification Procedures Issues Meeting

AGENCY: Federal Aviation Administration (FAA), DOT.

ACTION: Notice of public meeting.

SUMMARY: This notice announces a public meeting of the Federal Aviation Administration's Aviation Rulemaking Advisory Committee to discuss Aircraft Certification Procedures issues.

DATES: The meeting will be held on March 21, 2002, from 8:30 a.m. to 11:30 a.m. Arrange for oral presentations by March 15, 2002.

ADDRESSES: The meeting will be held at the General Aviation Manufacturers Association, 1400 K Street, NW., Suite 801, Washington, DC 20005–2485.

FOR FURTHER INFORMATION CONTACT: Maisa Mullen, FAA, Office of Rulemaking (ARM–205), 800 Independence Avenue, SW., Washington, DC 20591; telephone: (202) 267–7653, fax: (202) 267–5075.

SUPPLEMENTARY INFORMATION: Pursuant to section 10(a)(2) of the Federal Advisory Committee Act (Pub. L. 92–463; 5 U.S.C. App. II), notice is hereby given of a meeting of the Aviation Rulemaking Advisory Committee to be held on March 212, 2002, from 8:30 a.m. to 11:30 a.m. at the General Aviation Manufacturers Association, 1400 K Street, NW., Suite 801, Washington, DC 20005–2485. The agenda will include:

1. Opening Remarks.
2. Committee Administration.
3. A discussion and vote on the Parts and Production Certification Working Group draft advisory documents, entitled ''Means of Compliance with Proposed Quality System Requirements,'' ''Recommendation for Consistent Application of ODAR Processes for PAH Shipments,'' ''PAH Transition to New Quality System Requirements,'' and ''ARAC Working Group Advisory Circular Proposal.''
4. A status report on the Parts and Production Certification Working Group's remaining tasks.
5. A status report on the FAA submitted rulemaking projects for ''Establishment of Organization Designation Authorization (ODA) Procedures'', and ''Production Certification and Parts Manufacturing.''
6. A discussion of future meeting dates, locations, activities, and plans.

Attendance is open to the interested public, but will be limited to the space available. The FAA will arrange teleconference capability for individuals wishing to participate by teleconference if we receive notification before March 15, 2002. Arrangements to participate by teleconference can be made by contacting the person listed in the **FOR FURTHER INFORMATION CONTACT** section. Callers outside the Washington metropolitan area will be responsible for paying long distance charges.

The public must make arrangements by March 15, 2002, to present oral statements at the meeting. The public may present written statements to the committee at any time by providing 25 copies to the Assistant Executive Director, or by bringing the copies to the meeting. Public statements will only be considered if time permits. In addition, sign and oral interpretation, as well as an assistive listening device, can be made available at the meeting, if requested 10 calendar days before the meeting. Arrangements may be made by contacting the person listed under the heading **FOR FURTHER INFORMATION CONTACT.**

Issued in Washington, DC, on March 6, 2002.

Tony Fazio,

Executive Director, Aviation Rulemaking Advisory Committee.

[FR Doc. 02–5789 Filed 3–6–02; 8:45 am]

BILLING CODE 4910–13–M

DEPARTMENT OF TRANSPORTATION

Federal Highway Administration

Environmental Impact Statement; San Joaquin County, CA

AGENCY: Federal Highway Administration (FHWA), Department of Transportation.

ACTION: Notice of Intent.

SUMMARY: The FHWA is issuing this notice to advise the public that an environmental impact statement will be prepared for a proposed highway project in San Joaquin County, California.

FOR FURTHER INFORMATION CONTACT: Michael G. Ritchie, Division Administrator, Federal Highway Administration, California Division, 980 Ninth St., Suite 400, Sacramento, California 95814–2724.

SUPPLEMENTARY INFORMATION: The FHWA, in cooperation with the California Department of Transportation (Caltrans), will prepare an Environmental Impact Statement (EIS) on a proposal to improve State Route (SR) 99 in San Joaquin County, California. The proposed improvement would involve widening SR 99 from four lanes to six lanes from 0.6 kilometers north of Arch Road to 0.2 kilometers south of SR 4 West, in Stockton, San Joaquin County, California. Depending on the alternative selected, this project proposes to also remove the existing South Stockton over-crossing (#29–156) and the Clark Drive ''button hook'' ramps. The project would evaluate the feasibility of eliminating existing freeway access at the Farmington Road (SR 4 East) interchange and constructing frontage roads between Farmington Road (SR 4 East) and Mariposa Road to maintain continuity through the SR 4 East system. The proposed project would extend Netherton Avenue to Mariposa Road. It would reconstruct the Farmington Road (SR 4 East), Mariposa Road, and Charter Way interchanges and replace all existing bridges within the project limits to meet width and vertical clearance standards with provisions for the ultimate eight-lane freeway concept.

Alternatives under consideration include (1) taking no action, (2) widening into the median leaving a median that would vary between 3.8 meters and 7.1 meters, (3) widening into the median and to the outside leaving a median that would vary form 7.1 meters to 10.8 meters and, (4) reconstructing SR 99 to full standards with an 18-meter median.

Letters describing the proposed action and soliciting comments will be sent to the appropriate federal, state, and local agencies, and to private organizations and citizens who have previously expressed or are known to have interest in this proposal. A public hearing will be held. Public notice will be given of the time and place of the hearing. The draft EIS will be available for public and agency review and comment before the public hearing.

To ensure that all concerns and issues related to this proposed action are addressed and identified, comments and suggestions are invited from all

interested parties. If you have any information regarding historic resources, endangered species, or other sensitive issues that could be affected by this project, please notify this office. Also, please indicate if you would be interested in being notified at the completion of historic resources studies.

Comments or questions concerning this proposed action and the EIS should be directed to the FHWA at the address provided above.

(Catalog of Federal Domestic Assistance Program Number 20.205, Highway Research, Planning, and Construction. The regulations implementing Executive Order 12372 regarding intergovernmental consultation on Federal programs and activities apply to this program.)

Issued on: January 29, 2002.

Maiser Khaled,

District Engineer, Sacramento, California.

[FR Doc. 02–5758 Filed 3–8–02; 8:45 am]

BILLING CODE 4910–22–M

DEPARTMENT OF TRANSPORTATION

Federal Highway Administration

Environmental Impact Statement: Westchester County, New York

AGENCY: Federal Highway Administration (FHWA), DOT.

ACTION: Notice of intent.

SUMMARY: The FHWA is issuing this notice to advise the public that an environmental impact statement will be prepared for a proposed highway project in Westchester County, New York.

FOR FURTHER INFORMATION CONTACT: Robert A. Dennison III, P.E., Regional Director, NYSDOT Region 8; Eleanor Roosevelt State Office Building; 4 Burnett Boulevard; Poughkeepsie, NY 12603; Telephone: (845) 431–5750; or, Robert E. Arnold, Division Administrator, Federal Highway Administration, New York Division, Leo W. O'Brien Federal Building, Room 719, Clinton Avenue and North Pearl Street, Albany, New York 12207; Telephone: (518) 431–4127.

SUPPLEMENTARY INFORMATION: The FHWA, in cooperation with the New York State Department of Transportation (NYSDOT), will prepare an environmental impact statement (EIS) on a proposal to improve NYS Route 9A in Westchester County, New York. The proposed improvements will involve the reconstruction of approximately 2.5 miles of the existing route from just south of Route 119 to just north of Route 100C in the Towns of Greenburgh and Mount Pleasant and Village of Elmsford. The improvements to Route 9A are considered necessary to provide for the existing and projected traffic demand and to improve safety. Also, included in this proposal is the replacement of the existing Route 100C bridge over Route 9A and a new I–287 eastbound exit ramp to Route 9A.

Alternatives under consideration include: (1) Taking no actions; (2) widening and reconstructing Route 9A; (3) widening and reconstructing Route 9A and providing a new eastbound Cross Westchester Expressway (Route I–287) off ramp; (4) widening and reconstructing 9A, providing new eastbound Cross Westchester Expressway (Route I–287) off ramp, and improving access to major industrial/commercial area; and (5) constructing a bypass on new alignment in association with the widening and reconstruction of Route 9A. Incorporated into and studied with the various build alternatives will be design variations of grade and alignment.

Letter describing the proposed action and soliciting comments will be sent to appropriate Federal, State, and local agencies, and to private organizations and citizens who have previously expressed interest in this proposal. A series of public information meetings will be held in the Town of Greenburg between March 2002 and June 2003. In addition, a public hearing will be held. Public notice will be given of the time and place of the meetings and hearing. The draft EIS, when prepared, will be available for public and agency review and comment. A formal NEPA scoping meeting will be held at the Greenburgh Town Hall, 320 Tarrytown Road, Elmsford, New York 10523, on Wednesday, March 27, 2002. At 3:30 P.M. a meeting will be held for Federal, State, and Local agencies and at 7:15 P.M. a meeting for the general public and all interested parties. Each meeting will be preceded by a 30-minute open house during which attendees can view concept plans and interact with project team members.

To ensure that the full range of issues related to this proposed action are addressed and all significant issues identified, comments and suggestions are invited from all interested parties. Comments or questions concerning this proposed action and the EIS should be directed to the NYSDOT or FHWA at the addresses provided above.

(Catalog of Federal Domestic Assistance Program Number 20.205, Highway Research, Planning and Construction. The regulations implementing Executive Order 12372 regarding intergovernmental consultation on Federal programs and activities apply to this program.)

Authority: 23 U.S.C. 315; 23 CFR 771.123.

Issued on: February 25, 2002.

Douglas P. Conlan,

District Engineer, Federal Highway Administration, Albany, New York.

[FR Doc. 02–5759 Filed 3–8–02; 8:45 am]

BILLING CODE 4910–22–M

DEPARTMENT OF VETERANS AFFAIRS

[OMB Control No. 2900–0601]

Agency Information Collection Activities Under OMB Review

AGENCY: Veterans Benefits Administration, Department of Veterans Affairs.

ACTION: Notice.

SUMMARY: In compliance with the Paperwork Reduction Act (PRA) of 1995 (44 U.S.C., 3501 *et seq.*), this notice announces that the Veterans Benefits Administration (VBA), Department of Veterans Affairs, has submitted the collection of information abstracted below to the Office of Management and Budget (OMB) for review and comment. The PRA submission describes the nature of the information collection and its expected cost and burden; it includes the actual data collection instrument.

DATES: Comments must be submitted on or before April 10, 2002.

ADDRESSES: Send comments and recommendations concerning any aspect of the information collection to VA's Desk Officer, OMB Human Resources and Housing Branch, New Executive Office Building, Room 10235, Washington, DC 20503, (202) 395–7316. Please refer to ''OMB Control No. 2900–0601'' in any correspondence.

FOR FURTHER INFORMATION OR A COPY OF THE SUBMISSION CONTACT: Denise McLamb, Information Management Service (045A4), Department of Veterans Affairs, 810 Vermont Avenue, NW, Washington, DC 20420, (202) 273–8030 or FAX (202) 273–5981. Please refer to ''OMB Control No. 2900–0601.''

SUPPLEMENTARY INFORMATION:

Title: Loan Guaranty: Requirements for Interest Rate Reduction Refinancing Loans.

OMB Control Number: 2900–0601.

Type of Review: Extension of a currently approved collection.

Abstract: VA is authorized to guarantee loans to veterans to refinance existing mortgage loans previously guaranteed by VA provided the veteran still owns the property used as security for the loan. Lenders must collect certain information concerning the veteran and the veteran's credit history (and spouse or other co-borrower, as

applicable) in order to properly underwrite delinquent Interest Rate Reduction Refinancing Loan (IRRRLs). Under these proposed requirements, VA proposes to require that the lender provide VA with the credit information to assure itself that IRRRLs to refinance delinquent loans are underwritten in reasonable and prudent manner.

An agency may not conduct or sponsor, and a person is not required to respond to a collection of information unless it displays a currently valid OMB control number. The **Federal Register** Notice with a 60-day comment period soliciting comments on this collection of information was published on October 26, 2001, at page 54341.

Affected Public: Business or other for profit.

Estimated Annual Burden: 85 hours.

Estimated Average Burden Per Respondent: 30 minutes.

Frequency of Response: On occasion.

Estimated Number of Respondents: 170.

Dated: February 26, 2002.

By direction of the Secretary.

Barbara H. Epps,

Management Analyst, Information Management Service.

[FR Doc. 02–5786 Filed 3–8–02; 8:45 am]

BILLING CODE 8320–01–P

DEPARTMENT OF VETERANS AFFAIRS

[OMB Control No. 2900–0614]

Agency Information Collection Activities Under OMB Review

AGENCY: Veterans Health Administration, Department of Veterans Affairs.

ACTION: Notice.

SUMMARY: In compliance with the Paperwork Reduction Act (PRA) of 1995 (44 U.S.C., 3501 *et seq.*), this notice announces that the Veterans Health Administration (VHA), Department of Veterans Affairs, has submitted the collection of information abstracted below to the Office of Management and Budget (OMB) for review and comment. The PRA submission describes the nature of the information collection and its expected cost and burden; it includes the actual data collection instrument.

DATES: Comments must be submitted on or before April 10, 2002.

ADDRESSES: Send comments and recommendations concerning any aspect of the information collection to VA's OMB Desk Officer, OMB Human Resources and Housing Branch, New Executive Office Building, Room 10235, Washington, DC 20503 (202) 395–7316. Please refer to ''OMB Control No. 2900–0614'' in any correspondence.

FOR FURTHER INFORMATION OR A COPY OF THE SUBMISSION CONTACT: Denise McLamb, Information Management Service (045A4), Department of Veterans Affairs, 810 Vermont Avenue, NW., Washington, DC 20420, (202) 273–8030, FAX (202) 273–5981 or e-mail: *denise.mclamb@mail.va.gov.* Please refer to ''OMB Control No. 2900–0614.''

SUPPLEMENTARY INFORMATION:

Title: 4th Phase Supplement, ''Measurement/Validation of Psychosocial Risk and Resilience Factors Accounting for Physical/Mental Health and Health Related Quality of Life Among Veterans'', VA Form 10–21036(NR).

OMB Control Number: 2900–0614.

Type of Review: Revision of a currently approved collection.

Abstract: Phases I and II of this study are completed. The collection of information associated with Phase III is also completed. Phase IV is intended to complete VA's study of the ''psychological and biomedical measurements for early identification of individuals at risk for stress-related illness.'' The information collected will be used to produce a reliable inventory of psychosocial risk and resilience factors for contemporary military personnel and then demonstrate its validity vis-à-vis Gulf War veterans' self-reported somatic and psychological symptoms and judgments of health-related quality of life.

An agency may not conduct or sponsor, and a person is not required to respond to a collection of information unless it displays a currently valid OMB control number. The **Federal Register** Notice with a 60-day comment period soliciting comments on this collection of information was published on December 10, 2001, at page 63746.

Affected Public: Individuals or households.

Estimated Annual Burden: 313 hours.

Estimated Average Burden Per Respondent: 45 minutes.

Frequency of Response: One time.

Estimated Number of Respondents: 417.

Dated: February 27, 2002.

By direction of the Secretary:

Barbara H. Epps,

Management Analyst, Information Management Service.

[FR Doc. 02–5787 Filed 3–8–02; 8:45 am]

BILLING CODE 8320–01–P

DEPARTMENT OF VETERANS AFFAIRS

[OMB Control No. 2900–0166]

Agency Information Collection Activities Under OMB Review

AGENCY: Veterans Benefits Administration, Department of Veterans Affairs.

ACTION: Notice.

SUMMARY: In compliance with the Paperwork Reduction Act (PRA) of 1995 (44 U.S.C., 3501 *et seq.*), this notice announces that the Veterans Benefits Administration (VBA), Department of Veterans Affairs, has submitted the collection of information abstracted below to the Office of Management and Budget (OMB) for review and comment. The PRA submission describes the nature of the information collection and its expected cost and burden; it includes the actual data collection instrument.

DATES: Comments must be submitted on or before April 10, 2002.

ADDRESSES: Send comments and recommendations concerning any aspect of the information collection to VA's OMB Desk Officer, OMB Human Resources and Housing Branch, New Executive Office Building, Room 10235, Washington, DC 20503 (202) 395–7316. Please refer to ''OMB Control No. 2900–0166'' in any correspondence.

FOR FURTHER INFORMATION OR A COPY OF THE SUBMISSION CONTACT: Denise McLamb, Information Management Service (045A4), Department of Veterans Affairs, 810 Vermont Avenue, NW., Washington, DC 20420, (202) 273–8030, FAX (202) 273–5981 or e-mail: *denise.mclamb@mail.va.gov.* Please refer to ''OMB Control No. 2900–0166.''

SUPPLEMENTARY INFORMATION:

a. Application for Ordinary Life Insurance, Replacement Insurance for Modified Life Reduced at Age 65, National Service Life Insurance, VA Form 29–8485.

b. Application for Ordinary Life Insurance, Replacement Insurance for Modified Life Reduced at Age 70, National Service Life Insurance, VA Form 29–8485a.

c. Application for Ordinary Life Insurance, Replacement Insurance for Modified Life Reduced at Age 65, National Service Life Insurance, VA Form 29–8700.

d. Information About Modified Life Reduction, VA Forms 29–8700a–e.

e. Application for Ordinary Life Insurance, Replacement Insurance for Modified Life Reduced at Age 70, National Service Life Insurance, VA Form 29–8701.

f. Information About Modified Life Reduction, VA Forms 29–8701a–e.

OMB Control Number: 2900–0166.

Type of Review: Reinstatement, without change, of a previously approved collection for which approval has expired.

Abstract: The forms are used by the policyholder to apply for replacement insurance for Modified Life Insurance Reduced at Ages 65 and 70. The information is used by VA to initiate the granting of coverage for which applied.

An agency may not conduct or sponsor, and a person is not required to respond to a collection of information unless it displays a currently valid OMB control number. The **Federal Register** Notice with a 60-day comment period soliciting comments on this collection of information was published on May 3, 2001, at page 22284.

Affected Public: Individuals or households.

Estimated Annual Burden: 1,284 hours.

Estimated Average Burden Per Respondent: 5 minutes.

Frequency of Response: On occasion.

Estimated Number of Respondents: 15,400.

Dated: February 28, 2002.

By direction of the Secretary:

Barbara H. Epps,

Management Analyst, Information Management Service.

[FR Doc. 02–5788 Filed 3–8–02; 8:45 am]

BILLING CODE 8320–01–P

Corrections

Federal Register
Vol. 67, No. 47
Monday, March 11, 2002

This section of the FEDERAL REGISTER contains editorial corrections of previously published Presidential, Rule, Proposed Rule, and Notice documents. These corrections are prepared by the Office of the Federal Register. Agency prepared corrections are issued as signed documents and appear in the appropriate document categories elsewhere in the issue.

FEDERAL COMMUNICATIONS COMMISSION

47 CFR Part 25

[IB Docket 02–19; FCC 02–30]

Non-geostationary Satellite Orbit, Fixed Satellite Service in the Ka-band

Correction

In proposed rule document 02–5081 beginning on page 9641 in the issue of Monday, March 4, 2002, make the following correction:

On page 9641, in the third column, under the **DATES:** section, in the third line, ''April 3, 2002'' should read ''April 18, 2002''.

[FR Doc. C2–5081 Filed 3–8–02; 8:45 am]

BILLING CODE 1505–01–D

DEPARTMENT OF THE INTERIOR

Bureau of Land Management

[ES–020–1320–EL]

Notice of Intent to Prepare a Land Use Analysis/Environmental Assessment

Correction

In notice document 02–4147 beginning on page 8033, in the issue of Thursday, February 21, 2002, make the following corrections:

1. On page 8033, in the third column, under the heading **SUMMARY:**, in the fifth line, ''50213'' should read, ''51088''.

2. On the same page, in the same column, under the same heading, in the same line, ''315.13'' should read, ''64.51''.

[FR Doc. C2–4147 Filed 3–8–02; 8:45 am]

BILLING CODE 1505–01–D

DEPARTMENT OF TRANSPORTATION

Federal Aviation Administration

14 CFR Part 39

[Docket No. 2001–NM–253–AD; Amendment 39– 12633; AD 2002–02–05]

RIN 2120–AA64

Airworthiness Directives: Airbus Model A300 B2 and A300 B4; A300 B4–600, B4–600R, and F4–600R (Collectively Called A300–600); and Model A310 Series Airplanes

Correction

In rule document 02–2926 beginning on page 6376, in the issue of Tuesday, February 12, 2002, make the following correction:

§39.13 [Corrected]

On page 6378, in §39.13, in table 1, under the column'' In accordance with'', in the fifth line, ''A300–29–6004'' should read, ''A300–29–6003''.

[FR Doc. C2–2926 Filed 3–8–02; 8:45 am]

BILLING CODE 1505–01–D

Corrections

Federal Register
Vol. 67, No. 47
Monday, March 11, 2002

This section of the FEDERAL REGISTER contains editorial corrections of previously published Presidential, Rule, Proposed Rule, and Notice documents. These corrections are prepared by the Office of the Federal Register. Agency prepared corrections are issued as signed documents and appear in the appropriate document categories elsewhere in the issue.

FEDERAL COMMUNICATIONS COMMISSION

47 CFR Part 25

[IB Docket 02–19; FCC 02–30]

Non-geostationary Satellite Orbit, Fixed Satellite Service in the Ka-band

Correction

In proposed rule document 02–5081 beginning on page 9641 in the issue of Monday, March 4, 2002, make the following correction:

On page 9641, in the third column, under the **DATES:** section, in the third line, ''April 3, 2002'' should read ''April 18, 2002''.

[FR Doc. C2–5081 Filed 3–8–02; 8:45 am]

BILLING CODE 1505–01–D

DEPARTMENT OF THE INTERIOR

Bureau of Land Management

[ES–020–1320–EL]

Notice of Intent to Prepare a Land Use Analysis/Environmental Assessment

Correction

In notice document 02–4147 beginning on page 8033, in the issue of Thursday, February 21, 2002, make the following corrections:

1. On page 8033, in the third column, under the heading **SUMMARY:**, in the fifth line, ''50213'' should read, ''51088''.

2. On the same page, in the same column, under the same heading, in the same line, ''315.13'' should read, ''64.51''.

[FR Doc. C2–4147 Filed 3–8–02; 8:45 am]

BILLING CODE 1505–01–D

DEPARTMENT OF TRANSPORTATION

Federal Aviation Administration

14 CFR Part 39

[Docket No. 2001–NM–253–AD; Amendment 39– 12633; AD 2002–02–05]

RIN 2120–AA64

Airworthiness Directives: Airbus Model A300 B2 and A300 B4; A300 B4–600, B4–600R, and F4–600R (Collectively Called A300–600); and Model A310 Series Airplanes

Correction

In rule document 02–2926 beginning on page 6376, in the issue of Tuesday, February 12, 2002, make the following correction:

§39.13 [Corrected]

On page 6378, in §39.13, in table 1, under the column'' In accordance with'', in the fifth line, ''A300–29–6004'' should read, ''A300–29–6003''.

[FR Doc. C2–2926 Filed 3–8–02; 8:45 am]

BILLING CODE 1505–01–D

Federal Register

Monday,
March 11, 2002

Part II

Department of Labor

Mine Safety and Health Administration

30 CFR Parts 18 and 75

Electric Motor-Driven Mine Equipment and Accessories and High-Voltage Longwall Equipment Standards for Underground Coal Mines; Final Rule

DEPARTMENT OF LABOR

Mine Safety and Health Administration

30 CFR Parts 18 and 75

RIN 1219–AA75

Electric Motor-Driven Mine Equipment and Accessories and High-Voltage Longwall Equipment Standards for Underground Coal Mines

AGENCY: Mine Safety and Health Administration (MSHA), Labor.

ACTION: Final rule.

SUMMARY: This final rule establishes MSHA's new mandatory electrical safety standards for the installation, use, and maintenance of high-voltage longwall mining systems used in underground coal mines. The final rule also includes design approval requirements for high-voltage equipment operated in longwall face areas of underground mines. These provisions allow the use of high-voltage longwall face equipment with enhanced safety protection from fire, explosion, and shock hazards. In addition to providing a safer mining environment and facilitating the use of advanced equipment designs, the final rule reduces paperwork requirements by eliminating the need for petitions for modification (variances).

DATES: This regulation is effective May 10, 2002. The incorporation by reference of certain publications listed in the rule is approved by the Director of the Federal Register May 10, 2002.

FOR FURTHER INFORMATION CONTACT: Marvin W. Nichols, Jr., Director, Office of Standards, Regulations and Variances, MSHA, 4015 Wilson Boulevard, Arlington, Virginia 22203–1984. Mr. Nichols can be reached at *nichols-marvin@msha.gov* (Internet e-mail), 703—235–1910 (voice), or 703–235–5551 (fax). You may obtain copies of the final rule in alternative formats by calling this number. The alternative formats available are either a large print version of the final rule or the final rule in an electronic file on computer disk. The final rule also is available on the Internet at *http://www.msha.gov/REGSINFO.HTM.*

SUPPLEMENTARY INFORMATION:

I. Background

On December 4, 1989, the Mine Safety and Health Administration (MSHA) published a proposed rule (54 FR 50062) to revise its electrical safety standards for underground coal mines. That proposed rule addressed all of the Agency's electrical standards for underground coal mines and allowed the use of high-voltage longwall equipment. However, it did not specifically focus on the safety issues related to the use of high-voltage longwall equipment. The Agency published a new proposed rule (57 FR 39036) on August 27, 1992, related specifically to the safe use of high-voltage longwall equipment in underground coal mines. These rules also specifically addressed approval requirements for high-voltage electrical equipment operated in longwall face areas of underground coal mines. The comment period on the proposed rule was scheduled to close on October 23, 1992, but was extended to November 13, 1992 (57 FR 48350). On October 18, 1995, (60 FR 53891), MSHA reopened the rulemaking record for additional comments to the proposed rule to provide all interested parties an opportunity to submit additional comments. The comment period was scheduled to close on November 14, 1995, but was extended to December 18, 1995 (60 FR 57203). The Agency received no requests for a public hearing on the proposed rule. The record was reopened December 28, 1999, for comments on the updated Preliminary Regulatory Impact Analysis (PRIA). The record closed February 28, 2000. Only one comment was received. The commenter agreed with our economic analysis of the cost impact of the proposed rule.

These revised standards allow the use of high-voltage longwall mining systems. Longwall mining methods have undergone numerous advances in technology during the past 25 years. These technological advances have led to improved and safer systems. The additional requirements under 30 CFR part 18 provide enhanced safety protections that are consistent with advances in mine technology that allows high-voltage switchgear to be used on face equipment. Title 30 CFR parts 18 and 75 of this final rule implements a number of changes to approval and safety requirements for high-voltage equipment to accommodate the advances in technology in a manner that protects the safety of miners.

A. Part 18 Electric Motor-Driven Mine Equipment and Accessories

Electrical equipment horsepower in mines has increased over the years. The voltages required to operate this equipment have also increased to accommodate the design of practical and efficient equipment. The design of safe, efficient, and practical high-voltage electric equipment has improved dramatically in recent years. Because of the industry's need for higher voltages and the marked improvement in the design and manufacturing technology of high-voltage components, MSHA developed rules that establish requirements for safe high-voltage electric equipment use. This rule provides improved design requirements for longwall equipment, consistent with existing requirements in 30 CFR part 18, and contains provisions that accommodate new design technology, are practical, and lessen burdens on the mining community, while preserving safety and health protections for miners.

The safety criteria supporting the rule are based on research conducted over the past 18 years by the former U.S. Bureau of Mines (USBM) and MSHA. USBM functions are now a part of the National Institute of Occupational Safety and Health. This research included the following: (1) Foster-Miller research, under USBM contract No. H0308093, which developed a recommended high-voltage permissible loadcenter criteria; (2) MSHA research, under USBM contract No. J0333909, which resulted in modified criteria to address high-voltage permissible switchgear enclosures and the development of test facilities for acceptance of high-voltage permissible loadcenters and switchgear enclosures; (3) Follow-up MSHA inspections on high-voltage machines and longwall mining systems operating under experimental permits to confirm design requirements and operational safety; (4) MSHA internal research and review of engineering reports for further analysis of hazards relating to explosion-proof enclosures which contain high-voltage switching; and, (5) Input from various technical experts throughout the mining community. These criteria are technically sound and have the general consensus of the mining community, including equipment manufacturers and other interested parties.

The first high-voltage longwall system started operating in 1985. Since that time we have issued approximately 130 system design approvals for high-voltage longwall equipment. Over the last 16 years, no electrical-type fatalities or serious injuries occurred to miners because of high-voltage equipment used in accordance with over 100 granted high-voltage petitions for modification (petitions). Because of this new improved high-voltage technology, the designed safety benefits and the observed use experience, MSHA is revising its existing 30 CFR part 18 electric motor-driven mine equipment and accessories approval requirements by adding specific design requirements

for high-voltage longwall equipment in underground mines.

MSHA received comments from all segments of the mining industry, and the final rule addresses these comments. Many commenters were in favor of the new approval requirements and were in agreement on the majority of the provisions in the proposed rule. MSHA carefully reviewed all of the comments. This resulted in the modification of four of the sixteen technical requirements addressed in the proposed rule. We considered the views of all interested parties, including: mine operators; equipment manufacturers; miners' representatives; and other government agencies in developing this final rule.

MSHA is publishing this high-voltage longwall approval rule (30 CFR part 18) along with mandatory safety standards regarding high-voltage longwall equipment (30 CFR part 75). This new 30 CFR part 18 rule provides additional high-voltage equipment specifications that must be followed by the manufacturer in order to obtain MSHA approval of the equipment. The new 30 CFR part 75 rule provides installation, use, and maintenance requirements for high-voltage longwalls in underground coal mines.

B. Part 75 High-Voltage Longwall Equipment Safety Standards

This part of the final rule provides safety requirements for underground high-voltage longwall systems. Currently, longwall mining is permitted under MSHA's existing standards only if it uses low- or medium-voltage electrical power. High-voltage longwall systems are being used, but only when approved by MSHA through the petition for modification process under § 101(c) of the Federal Mine Safety and Health Act of 1977 (Mine Act). During the last 15 years, MSHA has evaluated the safe use of high-voltage longwall equipment, under a petition process that permits a mine operator to request that the application of a safety standard be modified at a particular mine. MSHA grants a petition when it determines that a mine operator has an alternative method which provides the same measure of safety protection as the existing standard, or when the existing standard would result in diminished safety protection to miners. Over the past 15 years, MSHA has granted over 100 petitions for modification to use high-voltage electrical power with longwalls. In the Agency's evaluation of the use of high-voltage longwall mining systems, MSHA concluded that they can be safely used, provided that certain conditions are met. Specifically, the Agency found that the previous safety concerns about explosion, fire and shock hazards initially associated with high-voltage use are sufficiently addressed by this newly-developed technology. In each of the petition cases the Agency granted, MSHA performed a specific on-site investigation to verify this finding. For example, we recognized that high-voltage electric equipment and circuit design improvements in combination with sensitive electrical circuit protections reduce fire, explosion and shock hazards. Newly designed cable handling systems provide additional safety protections against electrical shock, fire and explosion hazards when the cable is moved. Further, lighter power cables are available which reduce back strain and other injury risks to miners from the heavier cable lifting and hauling often associated with the moving or lifting of low- to medium-voltage cables. Moreover, there have been no electrical fatalities and no serious electrical injuries to miners from high-voltage equipment used under the granted modifications.

Because of the new improved high-voltage technology, with its attendant safety benefits, MSHA is revising its existing 30 CFR part 75 electrical safety standards. This final rule does not reduce the protection afforded by existing 30 CFR part 75 standards. It does, however, provide increased protection from electrical hazards, and reduces paperwork burden. It also reduces the time and cost to all parties associated with the petition for modification process. This final rule is implemented in conjunction with revisions to 30 CFR part 18, that address approval requirements for high-voltage equipment. The additional requirements under 30 CFR part 18 are also consistent with advances in mine technology, allowing high-voltage switchgear to be used on face equipment with enhanced safety protection from fire, explosion and shock hazards.

MSHA received comments from all segments of the mining community. Comments from labor, industry and manufacturers generally agree with the proposed rule. The final rule, to the extent feasible and appropriate, responds to commenters' concerns and reflects general consensus of various parties. However, MSHA did not adopt all comments received.

Joint commenters representing both industry and labor recommended that operators mining under granted high-voltage petitions containing non-electrical provisions continue to comply with such provisions. Labor commenters requested that standards addressing high-voltage longwalls also include provisions addressing non-electrical safety and health areas. Specifically, they noted that high-voltage longwall systems of extended widths and lengths can adversely affect not only ventilation, but shearer mounted methane monitors, intake escapeways, exposure to respirable dust, tailgate travelways, and storage plans for self-contained self-rescuers (SCSR's), as well as return entry rockdusting during mining.

It is the Agency's view that non-electrical safety and health issues related to the use of high-voltage longwalls are fully addressed by existing safety and health standards under 30 CFR parts 70 and 75. This view has been upheld by administrative law judge, Assistant Secretary and Court of Appeals decisions. *UMWA* v. *Federal Mine Safety and Health Administration*, 931 F. 2d 908,913 (D.C. Cir. 1991). The promulgated standards relating to ventilation and escapeways under 30 CFR 75.300 *et seq.* (61 FR 9764, March 11, 1996) provide protection with respect to ventilation and escapeways. Mandatory health standards under part 70 address exposures to respirable dust. Section 75.215—*Longwall mining systems*—addresses longwall tailgate travelway protection. Storage plans for SCSRs may be approved by MSHA District Managers in accordance with the specific conditions at each mine under § 75.1714–2—*Self-rescue devices; use and location requirements.* Existing § 75.400—*Accumulation of combustible materials*—provides protection against float coal dust and § 75.402—*Rock dusting*—requires adequate rockdusting measures. MSHA continues to work on improved respirable dust protection requirements in response to recommendations made by the Secretary of Labor's Advisory Committee on the Elimination of Pneumoconiosis Among Coal Mine Workers.

MSHA is aware that several granted modifications for high-voltage longwalls contain non-electrical requirements specific to the affected mine. These requirements are the result of settlement negotiations arising out of the petition process and are not required as part of this electrical standard. Parties to the current petition process may, through a voluntary, cooperative effort, continue to follow the non-electrical provisions after this final rule becomes effective. Moreover, as indicated above, existing and new standards substantially address these concerns and result in no diminution of safety and health protection currently afforded to miners. Moreover, the Agency continually reviews existing standards for

improvements that will enhance miner safety.

Some commenters suggested that the final rule allow a longer phase-in period, where equipment modifications are necessary. The Agency does not believe that a delayed effective date is necessary. Many operators are already complying with these requirements under the petition for modification process and the modern technology necessary to implement the final rule is readily available.

II. Discussion of Final Rule

The following section-by-section portion of the preamble discusses each provision affected, starting with the provisions in part 18. The text of the final rule is included at the end of the document.

Part 18 Electric Motor-Driven Mine Equipment and Accessories

This final rule addresses only those areas where specific additions to 30 CFR part 18 are necessary for the approval of high-voltage longwalls. The existing requirements of 30 CFR part 18 that apply to this equipment have not been revised. Examples of these types of requirements are the general construction requirements of the high-voltage enclosures and the short-circuit and overload protection to be provided. The overload and short-circuit protective device settings were not revised and will continue to be evaluated under existing requirements and Agency policy.

The main safety protections addressed in the final rule are summarized into four areas: (1) Prevention of a high-voltage arc from occurring; (2) Prevention of the resulting heat or flame from igniting a methane-air mixture surrounding the machine if an arc or methane explosion occurs; (3) Prevention of enclosure failure from an increased pressure rise if an arc or methane explosion occurs within the explosion-proof enclosure; and, (4) Personal protection for miners from electrical shock hazards when working in or around the high-voltage equipment.

Section 18.53 High Voltage Longwall Mining Systems (Nameplate Ratings From 1,001 Volts Through 4,160 Volts)

Paragraph (a) of this final rule requires the separation of compartments containing low- and medium-voltage circuits from those with high-voltage circuits in each motor-starter enclosure by location, partitions or barriers. Partitions and barriers, under this final rule, like the proposed rule, are required to be constructed of grounded metal or nonconductive insulating board. These requirements protect against shock hazards which may arise from inadvertent contact with energized high-voltage circuits. With the exception of a controller on a shearer, compliance with this section requires the components within each high-voltage motor-starter enclosure be segregated into separate compartments by voltage classification. The installation of the barriers and partitions provides separation of components in each high-voltage motor-starter enclosure. When complete separation of voltage classifications is not possible with barriers or partitions where both medium- and high-voltage circuits or both low- and high-voltage circuits are connected to a component or device, that component is required to be located in the motor contactor or disconnect device compartment.

This rule covers both explosion-proof and nonexplosion-proof motor-starter enclosures that are presently used by the mining industry. MSHA's policy has been to require barriers and partitions to separate the disconnect device compartment, control/communications compartment and motor contactor compartment in both power centers and motor-starter enclosures. If a motor-starter enclosure is part of a power center, then the partitions and barriers required by this rule only apply to barriers and partitions for the disconnect device compartment, control/communications compartment, and motor-starter compartment of the power center. This rule does not apply to other parts of the power center or to separate power centers that supply power to motor-starter enclosures. The mining industry presently provides barriers for power centers to separate high-voltage components from low- and medium-voltage circuits and equipment. MSHA encourages the industry to continue to provide barriers and partitions in power centers to minimize shock hazards by limiting exposure of personnel to high-voltage components when troubleshooting and testing low- and medium-voltage circuits. If barriers and partitions are not provided on power centers, the power center must be deenergized from an outby set of high-voltage visible disconnects and the high-voltage circuit grounded before troubleshooting and testing is performed on low- or medium-voltage circuits or equipment in the same compartment with high-voltage circuits or equipment.

Commenters suggested that, because of overall machine design considerations, an exception be provided for the controller on a shearer. In response to this comment, MSHA acknowledges that a shearer is a special case. The shearer is not required under § 18.53(f) to have a disconnect switch. Therefore, in an effort to address this issue, the final rule has been modified exempting the requirements of paragraph (a) when applied to a shearer.

One commenter recommended that the term ''location'' be deleted from the final rule, suggesting that there must be a physical separation within compartments to prevent accidental contact with a high-voltage circuit while troubleshooting low- and medium-voltage circuits. Another commenter proposed the use of separate compartments having explosion-proof walls between one compartment and the next. As noted in the proposed rule, the intent of this provision is to minimize shock hazards by preventing exposure of personnel to high-voltage components when troubleshooting and testing low- and medium-voltage circuits in accordance with § 75.820. MSHA believes that this can be accomplished by various types of partitions or barriers, including designing the enclosure into several separate explosion-proof compartments. When designing the partitions or barriers, however, consideration should be given to possible effects of pressure-piling within the enclosure. The use of the word ''location'', in the proposed rule allowed the option of having separate enclosures to house the various compartments, as noted by the commenter. In response to these comments, the final rule removes the word ''location'' to provide for flexibility, but clarifies that the requirement applies to each motor-starter enclosure.

Comments were also received suggesting that we change the word ''board'' to ''material'' in regard to construction of barriers and partitions. Since the word ''board'' suggests a more sturdy barrier than ''material,'' the final rule remains as proposed.

Paragraph (b) of the final rule, like the proposed rule, requires motor-starter enclosure compartment(s) containing high-voltage components be provided with cover interlock switches. These interlock switches will protect miners entering enclosures from shock hazards resulting from accidental contact with energized circuits. A minimum of two interlock switches per cover is required and must be wired into the circuitry so that operation of either switch will deenergize the incoming high-voltage circuits. The Agency believes that a second switch coupled with required maintenance under 30 CFR 75.512 will provide the necessary protection to ensure that the high-voltage circuits are deenergized whenever a cover is

removed. MSHA recommends either a magnetic or a whisker-type switch. MSHA's follow-up inspections of high-voltage equipment with plunger-operated switches reveal that these switches may stick and not operate effectively after exposure to the mine environment.

This rule covers both explosion-proof and nonexplosion-proof high-voltage motor-starter enclosures. MSHA's high-voltage longwall petitions require interlock switches for high-voltage compartments in both power centers and motor-starter enclosures. When a motor-starter enclosure is part of a power center, the interlock switches required by this rule only apply to motor-starter compartments of the power center. This rule does not apply to other parts of the power center or to separate power centers that supply power to motor-starter enclosures. The mining industry presently provides interlock switches for high-voltage compartments on power centers. MSHA encourages the industry to continue to provide interlocks switches for high-voltage compartments of power centers.

There were no comments on this paragraph. However, the last sentence of the proposed rule was deleted to clarify the Agency's intent that at least two switches be used to satisfy 30 CFR part 18.53 (b) requirements.

Paragraph (c) of the final rule, like the proposed rule, requires that circuit-interrupting devices installed in motor-starter enclosures be designed and installed to prevent automatic reclosure. Compliance with this provision protects miners working on the circuit or in other hazardous situations from unanticipated reenergization of the circuit. For example, faults occur in underground electrical systems as a result of roof fall damage or equipment insulation failure. Under such circumstances, the use of automatic reclosing circuit-interrupting devices would create shock and fire hazards should the devices reclose automatically when a short-circuit or ground-fault condition exists in the circuit. There were no comments on this paragraph. Therefore, the language in the final rule has not been changed from the proposed rule.

Paragraph (d) of the final rule, like the proposed rule, specifies that control transformers installed in each longwall motor-starter enclosure or control transformers that supply control power to each longwall motor-starter enclosure, must have electrostatic (Faraday) shielding, grounded by at least a No. 12 American Wire Gauge (AWG) grounding conductor, installed between the primary and secondary windings. Compliance with this provision protects against shock hazards should a fault develop between the primary and secondary windings. Faraday shielding provides electrical isolation between the high-voltage primary and low-voltage secondary windings of these transformers. As a secondary benefit, Faraday shielding of control transformers assures that transients occurring on the primary circuit are not transferred to the secondary circuit. Such transients could cause premature damage to electrical control equipment and create an economic burden for the mining industry.

This rule requires Faraday shielding for control transformers located in both explosion-proof and nonexplosion-proof motor-starter enclosures that are presently used by the mining industry. Also, this rule requires Faraday shielding for control transformers that supply motor-starter compartments, even if the control transformer is located in a separate power center. This rule does not cover control transformers for power centers that do not supply power to the motor-starter enclosure.

Paragraph (d) also requires the secondary nominal voltage of the control transformer be no more than 120 volts, line-to-line. This is consistent with the existing policy interpretation of 30 CFR part 18 control voltage limitations under § 18.47. There were no comments on this paragraph and therefore, the wording remains the same as the proposed rule.

Paragraph (e) of the final rule, like the proposed rule, requires test circuits to verify the integrity and proper operation of the ground-wire monitors and ground-fault protective devices. Test circuits for ground-wire monitors and ground-fault circuits assure that the circuits can be tested frequently in a manner that minimizes the hazards to personnel conducting the tests. Incorporating these test circuits into the longwall circuitry eliminates the need to test these protective devices by other means that could result in a shock hazard by placing personnel in close proximity to exposed energized conductors.

Some commenters noted that the testing of backup ground-fault devices located across the grounding resistor would require the application of an actual phase-to-ground fault, which could be hazardous. These commenters suggested that the ground-fault test circuit inject a primary current into the transformer and not subject the equipment to an actual phase-to-ground fault. In addition, another commenter supported the opinion that it is a dangerous practice to test ground-fault protection by making direct connections between phase and ground, and stated that MSHA should establish a policy on this so that the matter is resolved.

In response to these comments, unlike the proposed rule, the final rule includes a requirement that each ground-fault test circuit be designed to inject a primary current of 50 percent or less of the maximum ground-fault current through the current transformer to cause the corresponding circuit-interrupting device to open. This requirement is necessary to reduce the likelihood of a hazardous condition resulting from a phase-to-ground fault. A similar requirement is added to the final rule under 30 CFR 75.814(c).

Paragraph (f) of the final rule requires each longwall motor-starter enclosure, with the exception of a controller on a shearer, to be equipped with a disconnect device. Opening of the device deenergizes all high-voltage power conductors extending from the enclosure, except the conductors supplying power to the enclosure. Compliance with this paragraph provides for convenient and safe deenergization of high-voltage circuits and other components during testing and troubleshooting work, thus minimizing shock hazards.

A joint industry commenter suggested that the word ''incoming'' be inserted before the phrase ''disconnect device''. MSHA believes this is implied, since the device must deenergize all high-voltage power conductors extending from the enclosure. Therefore, the language of final rule remains as proposed.

Paragraph (f)(1) of the final rule, like the proposed rule, specifies that a single handle provide for simultaneous operation through a mechanical connection of multiple switches located within an enclosure. The simultaneous operation of multiple disconnect devices by the use of a single handle ensures that all high-voltage conductors extending from the enclosure are deenergized when the disconnect device is in the open position. This arrangement ensures that personnel entering other enclosures are protected from a shock hazard resulting from accidental contact with energized circuits in the event the wrong circuit is disconnected.

The words ''isolator switch'' and ''switches'' were removed in the final rule to minimize confusion. There were no comments on this paragraph and the language in the proposed rule remains unchanged except for the above clarifications.

Paragraph (f)(2) of the final rule, like the proposed rule, further defines the requirements of a disconnect device. The switch must be rated for the maximum phase-to-phase circuit voltage of the system. The ability to verify, by visual observation, that the switch's contacts are opened is also required. This verification must be determined without the removal of any enclosure cover. The removal of an enclosure cover to verify opening of the contacts presents an increased shock hazard to miners because of exposed energized high-voltage components.

Also included under this paragraph are the requirements that all load-side power conductors be grounded and the device be provided with a means to be locked when the device is in the ''open'' position. These requirements guard against the hazard of maintenance personnel being exposed to high-voltage energized parts due to residual voltage or inadvertent energization of the circuit.

The final requirements of this paragraph address the interrupting capability of the disconnect device. A disconnect device installed in an explosion-proof enclosure must be designed and installed to cause the current to be interrupted automatically prior to the opening of the device. This requirement addresses the concern about an explosion-proof enclosure failure because of an increased pressure rise. This pressure rise can result when an arc or methane explosion occurs within the explosion-proof enclosure. When the enclosure is not explosion-proof, as in outby switching, the device is required to either be installed in the circuit so that the circuit is automatically interrupted prior to the opening of the device or the device is required to be capable of interrupting the full-load current of the circuit. There were no comments on this paragraph and the language in the proposed rule remains unchanged in the final rule.

Paragraph (g) of the final rule addresses the interlocking of the disconnect device. These interlocking requirements reduce shock hazards by increasing the probability that the high-voltage circuits will be isolated and deenergized prior to performing testing and troubleshooting on the low- and medium-voltage circuits and ensure that high-voltage circuits may only be energized at the proper time following this activity.

This rule covers both explosion-proof and nonexplosion-proof motor-starter enclosures that are presently used by the mining industry. MSHA's policy has been to interlock disconnects with the control circuit in both power centers and motor-starter enclosures. If a motor-starter enclosure is part of a power center, then this rule covers the power center. This rule does not apply to separate power centers that supply power to motor-starter enclosures. The mining industry presently provides this interlocking of the disconnect device for power centers. MSHA encourages the industry to continue to interlock disconnects with the control circuits to facilitate troubleshooting and testing high-voltage circuits and equipment while the high-voltage circuits are disconnected. This maintains the existing level of protection because the interlock disconnects provide an additional safeguard against inadvertent exposure to energized high-voltage circuits.

One commenter noted that the proposed rule calls for deenergizing the incoming high-voltage circuit if the normal/test auxiliary switch is not in the normal position while closing the main circuit-interrupting device and the disconnect device (isolator switch). This commenter stated that this requirement would necessitate a retrofit in existing longwall controllers since the normal/test switch must be in the normal position when the disconnect switch is closed in order for the control circuit to function at all. This would prohibit the closing of the circuit-interrupting device and would disable the control circuitry. With the disconnect device in the open/grounded position, the test circuitry cannot be used unless the normal/test switch is in the test position. The commenter further indicated that, in either case, the incoming high voltage does not present a hazard.

Other commenters recommended that the control circuits within each high-voltage motor-starter enclosure be interlocked with the disconnect device, except for the controller on a shearer, so that the control circuit can be powered with an auxiliary test switch when the disconnect device is in the open and grounded position; and the disconnect device cannot be closed without de-energizing the incoming high-voltage circuit unless the auxiliary test switch is in the normal operating position. These commenters stated that, in many cases, it is necessary to close the main circuit-interrupting device with the auxiliary switch in the test position.

MSHA has carefully reviewed and considered these comments. The final rule retains the requirement that the control circuit for high-voltage motor-starters can only be energized through an auxiliary test switch when the disconnect switch is open and the load power conductors of the high-voltage circuit are grounded. The proposed requirement that neither the main circuit-interrupting device nor the disconnect device can be closed without deenergizing the incoming high-voltage circuit unless the auxiliary test switch is in the normal operating position, has been replaced with a requirement which more clearly states the expected performance of the control interlock circuit. The final rule requires high-voltage control circuits to be interlocked so they can be energized only when the disconnect switch is either in the ''closed'' or the ''open and grounded'' positions. High-voltage control circuits may not be operated in any other intermediate positions of the disconnect switch or auxiliary switch. This requirement will prevent unintentional energization of high-voltage components. The control circuit can be energized only when the disconnect switch is ''open and grounded'' with the auxiliary switch in the ''test'' position, or when it is closed with the auxiliary switch in the ''normal'' position. MSHA has not included language in this paragraph to specifically exclude the controller on a shearer from these interlock requirements, as suggested by some commenters. Shearers are not required to be equipped with a disconnect device as stated in § 18.53(f) of this final rule and MSHA does not intend that this provision be applicable to shearers. Therefore, except for the above stated clarifications, the final rule remains as proposed.

Paragraph (h) of the final rule requires that the electrical protection be set at an appropriate value to provide protection for the size and length of the longwall motor and shearer cable used, based on an ''available fault current'' study that must be submitted to MSHA. Proper electrical protection is essential in preventing a fire, explosion or shock hazard resulting from inadequate sizing of electrical cables.

Appendix I of existing 30 CFR part 18 includes maximum trailing cable protective device settings and trailing cable length restrictions as specified in Table 8 and in Table 9. These have, in the past, been used as guidance in evaluating cables on longwalls rated at less than 1,000 volts. Under this final rule and consistent with agency policy, the length restrictions and device settings do not apply to high-voltage longwall motor and shearer cables. The procedures used in evaluating high-voltage longwalls cables and settings include a review of the applicant's fault-current study to determine the minimum expected short-circuit currents available at the farthest projected installation in the electrical system.

This paragraph of the final rule has been clarified, in response to a proposed 1989 electrical rule comment, to indicate that trailing cables would also be included in the required evaluation to ensure adequate protection for the length and conductor size of all cables, including longwall motor, shearer and trailing cables. However, MSHA does not intend to specify a fixed maximum setting for short-circuit protective devices, as noted by the commenter. MSHA intends to be flexible by assessing each installation individually. The submitted fault study is the basis in determining the settings, and for permitting higher trailing cable circuit protective device settings and cable lengths than specified by 30 CFR part 18. MSHA recognizes that it is practical to design longwall systems with higher circuit protective device settings and longer cable lengths in order to lessen economic burdens on the mining community while preserving safety and health protections for miners. Some commenters noted that the fault study is unique to each mine and that this requirement should not be included in 30 CFR part 18. They suggested that the regulation is more suitable for inclusion in part 75. MSHA disagrees. In order for a longwall mining system to be safely designed, the designer must know the parameters under which the longwall will be operated. These parameters would include available fault currents. The final rule requires that this information be provided to MSHA to determine whether cables are adequately protected. Historically, longwalls are custom-made systems and are not designed for more than one mining company. The fault study should take into account worst-case projections (i.e., longest cable lengths, smallest Kilo-Volt Amperes (KVA) Power Center). Enforcement personnel will also use this information to ensure compliance with § 75.518–1—*Electric equipment and circuits; overload and short circuit protection; minimum requirements.* Except as clarified above, the final rule remains as proposed.

Paragraph (i) of the final rule requires all longwall motor and shearer cables with nominal voltages greater than 660 volts to have a cable construction with a grounded metallic shield around each power conductor. This regulation requires the incorporation of the grounded shield around each power conductor providing additional personnel protection against shock and electrocution hazards. This is necessary because any cable faults would cause phase-to-ground short-circuit currents to flow. An extra level of protection is achieved because the phase-to-ground short-circuit currents, unlike the phase-to-phase short-circuit currents that may flow from faults in other cable constructions, are limited in magnitude by the grounding circuit components.

Some commenters suggested that these cables should be assembled with a grounded shield around each power conductor but that the shield should not be specified as metallic since these power systems restrict ground-fault current to reduced values and the cables are constantly flexed. They believed that an improved cable could be developed with a nonmetallic shielding material around each power conductor. In response to this comment, MSHA believes that this technology has not been demonstrated or shown to provide equivalent safety in underground coal mines. Although MSHA supports the application of new technology, questions such as splicing reliability would need to be addressed before incorporating these types of cables on longwalls. If a reliable system using this type of cable were developed and equivalent safety were demonstrated, it could be addressed under existing §§ 18.20(b)—*Quality of material, workmanship, and design* and/or 18.47(d)(6)—*Voltage limitation* through the construction and design requirements for MSHA approval. The final rule has not been modified, as suggested by commenters, and remains as proposed.

Paragraph (j) of the final rule specifies that high-voltage motor and shearer circuits be provided with instantaneous ground-fault protection set at not more than 0.125-amperes. The current transformers (CT) used for ground-fault protection are required to be of the single window-type and installed to encircle all three phase conductors. This will provide highly sensitive and responsive ground-fault detection systems, using new technology such as solid state relays, for high-voltage circuits supplying electric face equipment. The protective devices are required to operate instantaneously when exposed to ground faults that exceed the trip setting of the ground-fault protective device. Therefore, compliance with this standard will greatly reduce the likelihood of fires and shock hazards that result from ground faults on the high-voltage circuits or equipment.

The use of the single window-type current transformer encircling all three phase conductors is the most reliable method for detection of ground faults in mine power systems. This type of relaying (zero-sequence) is not affected by CT error and gives very sensitive tripping. This scheme is widely used in mining at all voltages. Requiring all three phase conductors to be encircled by the CT prohibits the equipment safety grounding conductors from passing through or being connected in series with the CT. If the safety grounding conductor passes through or is connected in series with the CT, it is possible for the fault currents to flow through parallel paths, thereby reducing the reliability of the ground fault protection.

Some commenters suggested that if the full-load current of the circuit exceeds 200 amperes, the instantaneous ground-fault protection be set at not more than 0.200-amperes. They stated that it is very difficult to produce ground-fault current transformers that can reliably discriminate between small ground-fault currents and larger motor starting currents and that when the full-load current of a circuit exceeds 200 amperes, it is reasonable to expect motor starting currents in excess of 2,000 amperes. They asserted that a small increase in the setting of the ground-fault protection is justified for certain high-current circuits and that the suggested 0.200-ampere setting would still be less than 40 percent of the maximum ground-fault current. They noted that the specification of the current transformers is very rigid and stated that the regulation should allow for new technology if it can provide equal or improved protection. In relation to ground-fault protection, a commenter focused on MSHA's statement that zero sequence type relaying ''is not affected by CT error.'' The commenters stated that, in their experience, erroneous signals are produced in the CT's if the current levels are sufficiently high. They noted that when starting currents flowing in the power circuit are in excess of 2000A it is possible that an ''error current'' exceeding 100mA may be fed to the relay, causing nuisance tripping. For this reason, it is their belief that the relays on the power center output cables to the longwall controls are now set to a higher current of 200–300mA and these cables carry the combined starting currents of two or three motors. They concluded that as a result, when the size of individual motors gets larger, this problem will be experienced on motor cables.

MSHA has reviewed these issues and determined that reliable, sensitive ground-fault protective devices are commercially available and that they have been successfully used to correct the problems described by the commenters. These devices can safely and reliably operate at 0.125-ampere or

less. The use of a single window-type current transformer to encircle only the three phase conductors assures that sensitive ground-fault devices will detect all ground faults exceeding the setting of the device. Detection devices inserted in the ground wire may not detect all ground-fault currents and could compromise the integrity of the ground circuit. Therefore, the final rule has not been modified and remains as proposed.

Paragraph (k) of the final rule, like the proposed rule, requires safeguards against corona to be provided on all 4,160 volt circuits in explosion-proof enclosures. Corona is a luminous discharge that occurs around electrical conductors that are subject to high electrical stress. One danger inherent with high-voltage equipment is that excessive electrical stress can cause premature breakdown of insulating materials, which could result in arcing, thus creating an explosion hazard in the presence of corona. Corona usually doesn't present a hazard until voltage of 8kV are reached. However, even at 4,160 volts, safeguards should be taken. This would include using cables with a corona resistant insulation such as ethylene propylene, to avoid small nicks or cuts in the cable insulation and to minimize high-voltage transients. This provision is not intended to require stress cones or similar termination schemes. There were no comments on this paragraph. The final rule has not been modified and remains as proposed.

Paragraph (l) of the final rule, like the proposed rule, requires limiting the maximum explosion pressure rise within an enclosure to 0.83 times the design pressure for any explosion-proof enclosure containing high-voltage switchgear. This requirement protects against explosion hazards that may arise from the effects of a sustained high-voltage arcing fault. This arcing fault may significantly contribute to the pressure rise created in an explosion-proof enclosure during an internal methane-air explosion. Research conducted by the former U.S. Bureau of Mines and MSHA on effects of high-voltage arcing in explosion-proof enclosures concluded that this potential increased pressure rise can be safely addressed through a combination of designing the enclosure for the increased pressure and providing electrical protective devices set to deenergize the incoming circuit before the pressure rise becomes excessive. This provision requires that the maximum explosion pressure rise must be limited to a value that can be safely contained within the explosion-proof enclosure (83 percent of the design pressure). The final rule's performance-oriented language permits compliance through any achievable means. Protective methods used in previously issued approvals and experimental permits consisted of electrical devices with rapid clearing times. However, the rule provides for flexibility and permits alternative methods that may provide equal protection, such as pressure switches or special pressure release devices. There were no comments on this paragraph. The final rule remains as proposed.

Paragraph (m) of the final rule, like the proposed rule, requires that high-voltage electrical components located in high-voltage explosion-proof enclosures cannot be coplanar with a single-plane flame-arresting path. This protective measure will further prevent the heat or flame from an arc or methane explosion in an explosion-proof enclosure from igniting a methane-air mixture surrounding the enclosure. This requirement addresses the possibility of conductor material particles being expelled from the enclosure through the flame-arresting path. Particles of molten material are emitted from the conductors whenever a short-circuit occurs. Expulsion of these particles from the enclosure can occur if their source is in the same plane as the flame-arresting path and a pressure rise coincides with the short circuit. Once these particles are expelled from the explosion-proof enclosure, they can ignite an explosive atmosphere should one be present. This possibility does not arise with multi-plane flame-arresting path surfaces because a deflection in the path would prevent ignitions by expelled particles. There were no comments on this paragraph. The final rule remains as proposed.

Paragraph (n) of the final rule, like the proposed rule, addresses MSHA's concern with the decomposition of insulating materials due to tracking. In the presence of surface contaminants, small levels of current can flow between conductors. As the currents flow, the insulation may carbonize and produce conducting tracks. The conducting tracks may grow progressively across the surface eventually bridging between conductors and causing complete breakdown. Using insulation with an adequate Comparative Tracking Index (CTI) rating can prevent tracking, thus minimizing potential arcing that could lead to an explosion hazard. Paragraph (n) requires that rigid insulation between high-voltage terminals or between high-voltage terminals and ground be designed with creepage distances in accordance with the table labeled ''Minimum Creepage Distances'' included in this section. The required creepage distances are determined based upon the phase-to-phase use voltage and the CTI of the insulation to be used. Creepage distance is based in part on the CTI of the electrical insulating material. An appropriate method of determining the CTI of the electrical insulating material is described in the American Society for Testing and Materials Standard, ASTM D3638 ''Standard Test Method For Comparative Tracking Index of Electrical Insulating Materials.'' The MSHA derived creepage distances in the table are consistent with most commercially available high-voltage components to which this provision applies. There were no comments on this paragraph. The final rule remains as proposed.

Paragraph (o) of the final rule addresses a requirement for Minimum Free Distance (MFD) within an explosion-proof motor-starter enclosure. MSHA's Internal Engineering Report Number 87021701 (available in the rulemaking record) determined that if phase-to-phase arcing occurred, there may be adequate arc energy to heat the walls of the enclosure beyond the safe working temperature. This could cause failure of the enclosure and create an explosion hazard. Distances between the wall or cover of an enclosure and uninsulated electrical conductors inside the enclosure were established to prevent wall or cover damage from phase-to-phase arcing.

Some commenters suggested that the last sentence of the proposed paragraph (o) be revised as follows: ''If a grounded ¼-inch thick steel shield is installed between the area of potential arcing and the adjacent wall/cover area, the minimum free distance requirement is satisfied.'' MSHA believes that this comment was based on a footnote present in the part 18 approval criteria established by MSHA for high-voltage equipment containing on-board switching of high-voltage circuitry. This criteria indicates that the specified MFDs may be reduced if a ¼″ thick steel shield is used between the area of potential arcing and the adjacent wall/cover area. Since this footnote did not cite a MFD or qualify the circumstances under which this shield could be used, MSHA did clarify this criteria exception in the proposed rule, and the final rule remains unchanged with respect to this clarification. A commenter also stated that a steel shield could be mounted in conjunction with an aluminum wall or cover to reduce the required minimum free distance and that the thickness of this steel shield would be used to determine the required minimum free

distance. MSHA has determined that a ¼″ thick steel shield, mounted to maintain a minimum electrical clearance, as suggested by the commenter, would not provide sufficient protection if a phase-to-phase arc occurred. The final rule also permits the use of steel shields greater than ¼″ thick to provide for flexibility and diversification in enclosure design.

Some commenters noted that the proposed regulation classified all enclosures in one of two groups: those with short-circuit currents less than 10,000 amperes and those with short-circuit currents between 10,000 and 20,000 amperes. It was their view that because of the substantial increase in minimum free distance between these groups, MSHA should permit a manufacturer to calculate the appropriate MFD when the short circuit current is between 10,000 amperes and 20,000 amperes. They also recommended that MSHA include a provision that would permit the minimum free distances to be revised based on future research in this area. Finally, they noted that the MFD for a 1-inch thick cover under Column A was omitted.

In response to these comments, MSHA has revised the Minimum Free Distance Table by adding minimum free distance information for short-circuit currents of 15,000 amperes. Additionally under the final rule in paragraph (o)(1), MSHA allows for values not presented in the table provided that they meet the specific engineering formulas on which the table is based. These formulas were developed by MSHA engineers with standard engineering calculations using data obtained from high-energy arc testing. This testing was performed during Foster-Miller research, under USBM Contract No. H0308093. The MSHA research reports and data are part of the rulemaking record and are available for review.

Equipment approved under these circumstances will be limited to equipment used only with power systems that do not generate short-circuit currents that exceed the design parameters used for establishing minimum free distance. In addition, MSHA will consider the use of shields constructed with alternate materials and the use of alternate techniques and methods that preclude the possibility of high-energy arcs heating the walls of explosion-proof enclosures beyond safe working temperatures. If upon evaluation, equivalent safety is demonstrated, MSHA will address these technological advances and the results of additional research in this area, if warranted, under §§ 18.20(b) and/or 18.47(d)(6). MSHA intentionally omitted the MFD value for a 1″ thick steel wall/cover under Column A to minimize confusion. MSHA calculated this value to be 0.3″, which is less than the minimum electrical clearance that must be maintained under § 18.24 for high-voltage equipment. As indicated above, the proposed rule has been modified in part, and adopted in part.

Paragraph (p) of the final rule, like the proposed rule, requires a static pressure test to be performed on each prototype design of explosion-proof enclosure housing high-voltage switchgear prior to explosion tests. The manufacturer is also required to use this test as a routine test on every explosion-proof enclosure housing high-voltage switchgear, at the time of manufacture, or follow an MSHA accepted quality assurance procedure covering the inspection of the enclosure. These quality assurance procedures must include a detailed check of parts against the drawings to determine: (1) That the parts and the drawings coincide and (2) that the minimum requirements stated in 30 CFR part 18 have been followed with respect to materials, dimensions, configuration and workmanship.

MSHA is concerned about the specified design pressure of an enclosure. Presently, an enclosure that is designed for 150 pounds per square inch gauge (PSIG) is tested with a methane explosion. Normally, these pressures do not exceed 100 pounds per square inch (PSI). Since the protective method to prevent over-pressurization in these enclosures would be directly related to the design pressure, MSHA has developed the static pressure test with its acceptable performance criteria to ensure each enclosure design would be capable of withstanding its design pressure. By requiring static pressure testing on each enclosure prototype, MSHA believes that the adequacy of enclosure design would be verified. Additionally, to require either subsequent static pressure testing on each enclosure manufactured or an acceptable quality assurance program guarantees the integrity of later manufactured units.

The static test procedure specifies that the enclosure be internally pressurized to a pressure no less than the design pressure, with the pressure maintained for a minimum of 10 seconds. Following the pressure hold, the pressure is removed and the pressurizing agent removed from the enclosure.

Acceptable performance criteria are provided in this final rule. Acceptable performance is achieved if the enclosure, during pressurization, does not exhibit leakage through welds or casting or rupture of any part that affects the explosion-proof integrity of the enclosure. Further, the enclosure, following removal of the pressurizing agents, must not exhibit visible cracks in welds, permanent deformation exceeding 0.040 inches per linear foot, or excessive clearances along flame-arresting paths following retightening of fastenings, as necessary. Any of the above conditions would constitute unacceptable performance.

There were no comments on this paragraph. However, the final rule is modified to clearly state the type and nature of quality assurance inspections that qualify as an MSHA accepted quality assurance procedure.

Part 75 Mandatory Safety Standards—Underground Coal Mines

The final rule revises existing standard § 75.1002—*Location of trolley wires, trolley feeder wires, high-voltage cables and transformers,* and adds §§ 75.813 through 75.822 to set out additional safety precautions that allow the use of available technology. These new safety precautions address the use of high-voltage longwall equipment in face (production) areas. As stated earlier, MSHA previously included these safety precautions in petitions granted for § 75.1002. Based on its experience with petitions for modification, the agency expects the final rule to improve safety for underground coal mining.

Under the final rule, the risk of injury related to lifting and handling of cables should be reduced since the use of high-voltage cables can reduce the weight and size of a cable used in longwall face systems.

The final rule also provides the following protection against fire, explosions, and/or shock hazards:

(1) Improved short-circuit and ground fault protection;

(2) A means to easily test the effectiveness of ground fault protection;

(3) Use of manufactured cable support systems for cables extending from the power center to the headgate;

(4) Use of insulated cable-handling equipment;

(5) Use of protective gloves to troubleshoot and test low- and medium-voltage circuits associated with high-voltage circuits;

(6) Use of additional protection for cables at points where cables leave support systems;

(7) Use of more improved ''quick handle'' disconnect devices for the purpose of performing work; and

(8) The use of barriers and interlock switches to help guard against contact

with energized circuits. The final rule requires the use of cables containing metallic shielding (SHD) around each power conductor.

Many of these final rule safety improvements are required conditions for granted modifications of § 75.1002. However the final rule, like the proposed rule, provides two additional requirements. These are gloves for troubleshooting and testing, and test circuits for ground-fault protection.

The final rule, in response to commenters' suggestions, also provides two provisions not included in the proposed rule, §§ 75.814(e) and 75.822. Section 75.814(e) requires a single circuit interrupting device for cables connected in parallel or permits parallel circuits-interrupting devices to protect parallel cables when the parallel circuit-interrupting devices are electrically and mechanically interlocked. Section 75.822 allows the use of No. 16 AWG ground-monitor conductors. These additional provisions are a logical outgrowth of the proposed rule and notice and comment process, reflecting the primary purpose of the proposed rule by allowing the use of high voltage on longwalls in a safe and efficient manner. The new provisions are in response to specific joint industry and labor comments received about parallel circuit use, and industry comments about the size of ground-check conductors. These additional provisions permit the use of high-voltage longwall systems that are safe, effective and efficient and reflect the mining community's experience with granted modifications. The ground-monitor conductor size and the multiple parallel circuit provisions are not requirements but are offered to give flexibility to mine operators to use available technology and to minimize cost burdens where feasible.

Section 75.814(e) of the final rule requires that multiple (parallel) circuits be protected by a single circuit-interrupting device rather than parallel connected circuit-interrupting devices, except when parallel devices are mechanically and electrically interlocked. This requirement is based on MSHA electrical safety experience, and experience in granting high-voltage longwall petitions for modification, and is consistent with requirements under nationally recognized consensus standards. Although multiple parallel circuits are not necessary for safe high-voltage longwall systems, they do present certain safety and cost efficiency advantages to some longwall high-voltage systems as demonstrated under MSHA's and the mining industry's petition experience. Higher currents can be used without increasing voltage levels which helps minimize cable over-heating and reduces cable insulation deterioration. Multiple parallel circuits in these systems are a logical option that resulted from this high-voltage longwall petition experience. As noted above, industry and labor suggested multiple parallel circuit use during the rulemaking comment process.

Section 75.822 allows the use of high-voltage longwall cables with a minimum No. 16 AWG center ground-monitor conductor. This provision eliminates the need for petitions for modification of § 75.804(a). It allows the use of improved high-voltage cable designs that provide increased protection against fire and shock hazards. It reduces inter-machine arcing from induced currents which can result in an ignition hazard. The cable designs were initially developed for high-voltage longwall equipment under previously granted petitions.

The cable design requirements were also requested by labor and industry during the comment period of the proposed rule. Since 1992, under MSHA-approved petitions, these cable designs have been safely used.

These new requirements not only permit multiple parallel cable use and the use of No. 16 AWG ground-monitor conductors but also minimize industry paperwork requirements. With this new technology, the final rule results in improved safety and savings for both the mining community and MSHA. Cable replacement and maintenance costs will be reduced. Also, mine operators will not need to file petitions for modification; therefore, costs associated with the petition process will be eliminated. Legal costs are incurred by all segments of the mining community in the administrative review process associated with petitions. Agency costs associated with publication, processing, investigation and review of high-voltage longwall petitions will also be eliminated.

The final rule increases safety protections and does not reduce the protections currently afforded miners.

Section 75.2 Definitions

The definitions in this section are key to proper interpretation of the electrical standards. Upon review, the Agency concluded that these definitions should also be used to describe these terms wherever they appear in 30 CFR part 75 and proposed such an approach. This approach will provide clarity and consistency in the use of these terms where they appear in all underground safety standards. All underground coal mine operators and miners representatives were sent copies of these proposed definitions as part of the complete longwall high-voltage proposed rule. There were no comments opposing this approach.

The definitions are derived from consensus standards, including the Institute of Electronic and Electrical Engineers, *The New Standards Dictionary of Electrical and Electronics Terms—Standard 100–1992, and the National Electrical Code (NEC).* Definitions found in 30 CFR part 18 of MSHA's regulations were also used as a source for this final rule. In some instances, definitions taken from these sources were changed to apply to electric circuits and equipment used in the coal mining industry.

MSHA proposed that the term ''adequate interrupting capacity'' be defined as the ability of an electrical protective device to safely interrupt all values of current which can occur at its location in excess of its trip setting or melting point. A commenter suggested that this term be defined as the ability of an electrical protective device, based upon its required and intended application, to safely interrupt values of current in excess of its trip setting or melting point. MSHA agrees and has changed the proposed definition to reflect this suggestion. This commenter suggested that the proposed definition would cause a problem, since in motor-starter enclosures of the type presently used for high-voltage longwalls, short-circuit protection is provided by a single circuit breaker common to all motor circuits, whereas overload, ground fault, and ground-monitor protection trips individual motor contactors. According to this commenter, this could result in the interruption of the intended protected circuits at a higher current value than was intended or required for that circuit, therefore, affording less protection against overheating, shock and fire hazards. The commenter further suggested that in applying the revised definition, the short-circuit relay signals the circuit breaker to interrupt the short-circuit current, whereas the ground-fault relay signals the contactor to interrupt the restricted ground-fault current. Under the final rule, adequate interrupting capacity is determined by comparing the interrupting rating of the device with the actual characteristics of the circuit to be protected. Thus, interruption of the circuit occurs at the current rating required or intended for that circuit rather than all values of current which can occur at its location.

The final rule defines ''approval documentation'' to mean formal papers issued by the Mine Safety and Health Administration which illustrate and

describe the complete assembly of electrical machinery or accessories that have complied with the applicable approval requirements of 30 CFR part 18. The rule retains the meaning of the proposed rule but, for clarification purposes, replaces ''formal document'' with the words ''formal papers'' and the verb ''document'' with the words ''describe and illustrate''. The proposed language was also changed to accurately reflect that ''approval documentation'' refers to those papers that illustrate and describe equipment meeting the ''applicable requirements of 30 CFR part 18.'' This change clarifies that approval documentation must be submitted under part 18. MSHA received no comments in regard to this definition.

Like the proposed rule, the final rule defines ''circuit-interrupting device'' as a device designed to open and close a circuit by nonautomatic means and to open the circuit automatically at a predetermined overcurrent value without damage to the device when operated within its rating. The Agency received no comments on this definition and it is unchanged from the proposed rule. This definition clarifies that circuit-interrupting devices be designed for manual closure rather than automatic, to protect against safety hazards which could result in severe bodily injury and death if unexpected automatic energization of equipment were to occur. Conversely, the device must be capable of opening the circuit automatically upon the occurrence of an electrical fault. The rating of the device must be at a value that would protect the device from damage during the automatic deenergization of the circuit.

''Ground fault or grounded phase'' is defined to mean an unintentional connection between an electric circuit and the grounding system. MSHA received no comments on this definition and it remains unchanged from the proposed rule.

Like the proposed rule, the final rule defines ''motor-starter enclosure'' to mean an enclosure containing motor starting circuits and equipment. This term describes equipment commonly used to house longwall motor-starting equipment. No comments were received on this definition and it remains unchanged.

Also like the proposed rule, the final rule defines ''nominal voltage'' to mean the phase-to-phase or line-to-line root-mean-square value assigned to a circuit or system to conveniently designate its voltage class, such as 480 or 4,160 volts. The definition clarifies that the actual operating voltage of a system or circuit may vary from its nominal voltage within a range that permits satisfactory operation of equipment. The Agency received no comments on this definition and it has not been changed.

The final rule, like the proposed rule, defines ''short circuit'' to mean an abnormal connection of relatively low impedance, whether made accidentally or intentionally, between two points of different potential. There were no comments on this definition so it remains unchanged.

Definitions of low voltage, medium voltage, and high voltage were inadvertently included in the proposed rule. No comments were received on these definitions. These terms are defined in existing rules and are not addressed in this final rule.

One commenter suggested that ''cable handling and support system'', a phrase used frequently in § 75.817—*Cable handling and support systems,* should be defined. Section 75.817 contains the performance goals that cable handling and support systems must achieve, by minimizing the possibility of miners coming into contact with cables and protecting the high-voltage cables from damage. The Agency does not believe that a definition is necessary for this term. Specifically defining a cable handling and support system would limit operator flexibility with respect to cable handling and support systems that may be designed in the future and provide equal or greater safety protection. Cable handling and support systems are understood by the plain meaning of the words.

Section 75.813 High-Voltage Longwalls; Scope

Section 75.813 describes the scope of this final rule; it identifies new §§ 75.814 through 75.822 as electrical standards that apply only to the use of high-voltage longwall circuits and equipment. The final rule, unlike the proposed rule, expands the scope to include new § 75.822. As explained below, § 75.822 is included in the final rule in response to a comment regarding the size of ground-monitor conductors in cables. This provision also eliminates the need for petitions for modification related to ground-monitor conductor size. This section also clarifies that all other existing standards in 30 CFR that are applicable to the use of high-voltage longwall circuits and equipment continue to apply. For example, safety standards, such as grounding and ground-monitor requirements contained in subparts H and I of part 75 that are currently applicable to high-voltage installations are also applicable to high-voltage longwall equipment.

Some commenters suggested that an exception should be made in the standard for shearing machines that have been previously evaluated by MSHA under part 18, using non-high-voltage criteria. However, such an exemption would exclude shearing machines from the general safety requirements contained in the final rule. Safety requirements pertaining to electrical work, such as troubleshooting and testing, and installation, examination and maintenance, contain provisions that apply to all equipment on the high-voltage longwall, including shearing machines. Other provisions relating to disconnect devices and cable handling and support systems are applicable to the equipment they address. Therefore, the Agency does not believe that a general exemption for shearing machines would promote safety.

Section 75.814 Electrical Protection

This section of the final rule is derived in part from existing §§ 75.518–1—*Electric equipment and circuits; overload and short circuit protection; minimum requirements*, 75.800—*High-voltage circuits; circuit breakers*, and 75.800–2—*Approved circuit schemes* and addresses electrical protection methods for longwall equipment supplied by high-voltage systems. The effects of ground faults, electrical arcing, heating of conductors, and short circuits can have adverse consequences to the safety of miners. Effective electrical protection for longwall equipment will reduce the potential for ignitions, fires, and miner exposure to energized equipment frames. The final rule incorporates the latest technology and provides increased worker protection for high-voltage longwall mining equipment.

Paragraph (a) of the final rule addresses requirements for short-circuit, overload, ground fault, and undervoltage protection for high-voltage cables extending from the section power center, the shearer motor cable(s), and the remaining motor cables. Short-circuit and overload protection prevent damage to cables and motors due to overheating. Ground-fault protection minimizes the risk of shock injuries and ignition hazards to miners. Under-voltage protective devices prevent automatic restarting of equipment following a loss of power.

The final rule also requires circuit-interrupting devices for high-voltage circuits that supply power to longwall equipment be properly rated to safely interrupt the current to which it may be exposed without damage. The adequacy of the circuit-interrupting device assures that the device will remain undamaged by overcurrents and faults in the system.

One commenter requested clarification regarding whether vacuum contactors can be used to provide ground-fault and overload protection since some have been approved for use on longwall controllers. Vacuum contactors are a vacuum sealed system as opposed to a circuit breaker, which interrupts the arc in air or oil. The final rule permits the use of vacuum contactors as long as these contactors meet the definition of a ''circuit-interrupting device.''

Some commenters submitted sketches of high-voltage longwall circuits, and requested an evaluation of whether the circuits would comply with the standard. It is beyond the scope of this rulemaking for MSHA to evaluate and approve such submissions. Systems and wiring designs can vary from mine to mine and from section to section within the same mine, depending on factors such as control circuit configuration, load terminations, and available fault current. MSHA will evaluate these designs on a case-by-case basis as mine operators plan to implement high-voltage longwalls at their mines and during the approval process under the applicable 30 CFR part 18 provisions.

Paragraph (a)(1) of the final rule, like the proposed rule, specifies a current setting for short-circuit protective devices. The devices, whether located in the section power center or the longwall motor-starter enclosure, are required to be set at the lower value of either the setting specified in the approval documentation pertaining to the longwall system, or 75 percent of the minimum available phase-to-phase short-circuit current. The short-circuit current settings specified during MSHA's approval process are based on the calculation of fault currents at various key locations in the system.

The results of a 1992 Agency study of fault current levels in 30 high-voltage longwall systems indicate that phase-to-phase short-circuit currents range between 1,500 and 9,000 amperes at the various motor locations. (A copy of this study is available as part of the record.) Therefore, current (ampere) settings of 75 percent of the minimum phase-to-phase short-circuit currents will establish maximum limits for trip settings of short-circuit current devices. As equipment is used and moved from one location to another in a mine, changes take place in both the equipment and electrical system that indicate a need for a change in settings for short-circuit protective devices. Some commenters suggested that a statement be added to this provision indicating that the minimum available short-circuit current be determined by calculations and not by actual in-mine short-circuit tests.

To date, it has not been necessary to conduct in-mine testing for the purpose of making determinations of proper settings of short-circuit protective devices. However, the method used to make these determinations should not be restricted to calculations, since unusual or unanticipated conditions, such as high motor starting currents, may require in-mine testing.

Paragraph (a)(2) of the final rule specifies short-circuit time delay settings for protective devices. Short-circuit devices protecting cables extending from section power centers to motor-starter enclosures may incorporate time delays limited to the settings specified in the approval documentation or 0.25-second, whichever is less. This paragraph revises the proposed rule to allow short-circuit devices protecting motor or shearer circuits to incorporate intentional time delays. The time delays may be limited to the settings specified in the approval documentation, or up to three cycles (0.050-seconds), whichever is less. The purpose of permitting a time delay is to prevent nuisance tripping during motor starting. When high-voltage longwall equipment was introduced to the mining industry, nuisance tripping problems were experienced. This nuisance tripping was caused by motor starting currents. In order to solve these problems, it may be necessary to incorporate time delays into the short-circuit protective devices. Currently, electronic relays that have a time delay to override motor starting currents are commonly used to provide short-circuit protection for high-voltage longwall circuits.

The proposed rule allowed time delays for short-circuit devices protecting cables extending from power centers to motor-starter enclosures. The maximum value of the time delay was limited to the smaller of the value specified in the approval documentation or 0.25-second (15 cycles). However, the proposed rule did not provide for time delays to be incorporated into short-circuit devices protecting motor or shearer cables. The Agency specifically solicited comments regarding elimination of intentional time delays and allowing higher short-circuit settings based on system capacity.

One commenter stated that time delays between the longwall controller and section power center should be required to permit adequate coordination with downstream devices. According to the commenter, if there is a failure in the utilization circuit, for example, the crusher motor, it is advantageous for the failure to be cleared by the circuit-interrupting device in the controller, not the section power center which acts as a back-up. This commenter further stated:

(1) Without the presently permitted time delays, the fault would also deenergize the transformer, and more than likely, personnel would reenergize the circuitry to find the location of the fault in the system;

(2) This unnecessary closing in on a faulted circuit is eliminated when the circuits are properly coordinated; and

(3) Time delays should be kept as short as possible to provide adequate coordination.

Other commenters suggested that time delays be eliminated and higher short-circuit settings be allowed based on system capacity, provided that the Agency develops test scenarios to determine the safe time delay settings. These commenters stated that elimination of time delays would offer protection in the event of a direct fault because there would not be resistor strips (overloads) available to open the circuit and remove the power. They stated that inspections have revealed that, in some cases, resistor strips are either not operable, damaged, or have been by-passed.

After careful review of this issue, the Agency has concluded that the use of time delays and subsequent lower short-circuit settings would result in coordination (selective tripping) of circuit-interrupting devices. Proper coordination of circuit-interrupting devices can result in improved safety since faulted circuits can be more easily and safely identified and isolated for the purpose of troubleshooting, testing, and repair work. Commenters also suggested that time delay settings of short-circuit protective devices used to protect any cable extending from the section power center to a motor-starter enclosure not exceed the settings specified in approval documentation or 0.30-second (18-cycles), whichever is less.

This provision is not changed from the proposed rule. MSHA's experience has been that the maximum time delay for reliable coordination is 0.25-second (15-cycles). Further, a joint standard published by the American National Standards Institute (ANSI) and the Institute of Electrical and Electronics Engineers, Inc., entitled *IEEE Recommended Practice for Protection and Coordination of Industrial and Commercial Power Systems (IEEE Buff Book)—Standard 242–1986,* allows 0.25-second time-delay to ensure reliable coordination of short-circuit protective devices. Therefore, an increase to 0.30-second is not justified.

These commenters further suggested that short-circuit protective device settings, used to protect motor and shearer circuits, should be based on the maximum asymmetrical starting current with no intentional time delay or be based on the maximum symmetrical starting current with a time delay of no more than 0.050-second (three-cycles). These commenters pointed out that modern electronic short-circuit protective devices can be made to operate within one cycle (0.017-second). These devices will respond while the motor or shearing machine starting current contains an appreciable asymmetrical component and the asymmetrical component of the motor or shearing machine starting current will be negligible near 0.050-second. They suggested that introducing a 0.050-second time delay will permit a significant reduction in the setting of the short-circuit protective devices. Another commenter suggested that it is important to recognize the difference between asymmetrical motor starting currents that persist for two (0.033-second) to three cycles (0.050-second) following contactor closure, and motor starting currents that persist for several seconds. This commenter pointed out a need for two cycles time delay. MSHA agrees that there is a difference between asymmetrical motor starting currents and symmetrical motor starting currents which can last for several seconds.

Therefore, the final rule permits limited time delays to be used in conjunction with lower settings of short-circuit protective devices rather than higher settings of short-circuit protective devices without time delays. This should result in proper coordination and subsequent selective tripping of circuit-interrupting devices and prevent nuisance tripping of circuit-interrupting devices due to high motor starting currents. In response to comments, the Agency concludes that a time delay will be necessary to allow proper starting of motors. Therefore, this provision allows short-circuit devices protecting motor or shearer circuits to incorporate intentional time delays limited to the settings specified in the approval documentation, or up to three cycles (0.050-seconds), whichever is less.

Paragraph (a)(3) of the final rule, like the proposed rule, requires ground-fault currents to be limited by a neutral grounding resistor to not more than 6.5 amperes when the nominal voltage of the power circuit is 2,400 volts or less, or 3.75 amperes when the power circuit voltage is greater than 2,400 volts. Typically, the mining industry has used grounding resistors in resistance-grounded systems that limit the ground-fault current in a circuit to 0.50 to 1.00 ampere. MSHA encourages this practice to continue. The levels specified in the final rule allow new technology to detect lower ground-fault currents and reduces shock hazards. During ground-fault conditions, the grounding resistor will dissipate heat. The final rule limits the heat dissipation by the grounding resistors to a value equivalent to the heat dissipated by grounding resistors that have been in service for numerous years on medium-voltage longwall systems. The specified values prevent grounding resistor enclosures from overheating and becoming ignition or fire sources. There were no comments on this provision and therefore it remains as stated in the proposed rule.

Paragraph (a)(4)(i) of the final rule, like the proposed rule, requires high-voltage circuits extending from the section power center to have ground-fault protection set at not more than 40 percent of the current rating of the neutral grounding resistor. These protective devices assure that circuits extending from the section power source will be quickly deenergized when they are subjected to ground faults. The final rule uses the current ratings for grounding resistors, specified in paragraph (a)(3), as a basis for setting ground-fault devices. For example, if a 6.50 ampere grounding resistor is used, the ground-fault device must operate to deenergize the circuit at 2.60 amperes (40 percent) or less. If a 0.50-ampere grounding resistor is used, the ground-fault device must operate to deenergize the circuit at 200 milliamperes or less. The 40 percent trip level provides a safety factor to assure that unexpected lower levels of ground-fault current would be detected and cause the circuit-interrupting device to open. This value also allows proper trip coordination with other protective devices. There were no comments on this section of the rule and the final rule adopts the language used in the proposed rule.

Paragraph (a)(4)(ii) of the final rule, like the proposed rule, requires backup ground-fault protection to detect an open grounding resistor. The ground-fault protective device can be a combination of a potential transformer and voltage relay, or another device(s) capable of detecting an open neutral resistor. Once an open neutral resistor is detected, the ground-fault protective device must cause the circuits extending from the power center to be deenergized. There were no comments on this section of the rule and it remains as stated in the proposed rule.

Paragraph (a)(4)(iii) of the final rule requires thermal protection for the high-voltage neutral grounding resistor, which opens the ground-check circuit for the high-voltage circuit supplying the section power center, if the grounding resistor is subjected to a sustained ground-fault current. The overtemperature rating or setting must be 50 percent of the maximum temperature rise of the grounding resistor or 150°C (302° F), whichever is less. The final rule is changed from the proposed rule to also allow the use of a current transformer, and a thermal overcurrent relay to provide the required thermal protection. The final rule uses the term ''thermal protection'' rather than ''overtemperature protection'' to permit current transformers and thermal relays or other devices such as thermostats that react to overtemperature. This change allows new technology developed by the mining industry during the last seven years.

A commenter questioned the need for these devices. In response, grounding resistors generate heat when subjected to sustained ground-faults. An overtemperature device causes interruption of the high-voltage circuit supplying the section power center by opening the ground-wire monitor circuit before extreme heat destroys the grounding resistor function. Failure of the resistor leaves the circuit unprotected against ground-faults and increases the possibility of fire and shock hazards. The commenter also requested a six-month delay in implementing this provision to allow mine operators to acquire high quality devices. It is MSHA's view that since these devices have been required to be installed on high-voltage longwall mining systems for at least the past seven years under petitions granted for § 75.1002, the devices should be readily available for use. A six month delay is not necessary.

Another commenter wanted the maximum temperature for the overtemperature device to be set at 150° C. This setting was incorporated into the 1992 proposed rule. Some commenters suggested that overtemperature protection should remove power from the power center transformer if the grounding resistor is subjected to a sustained ground fault. These commenters pointed out the following:

(1) Many power centers are equipped with an incoming high-voltage circuit breaker to provide protection for the transformer;

(2) The overtemperature protection for the grounding resistor could cause this circuit breaker to open in the event of a sustained fault; and

(3) This would remove the ground fault and make troubleshooting more convenient.

MSHA agrees that the use of an incoming high-voltage circuit breaker may be an acceptable device for removing power from the section power center when the overtemperature device is activated. However, activation of the grounding resistor overtemperature protection could be an indication of serious problems in the tripping circuits for the circuit-interrupting device(s) located in the power center. This condition warrants complete removal of power from the entire power center until the condition is properly investigated and corrected.

Another commenter stated that experience has shown that the required protection may be best provided by using a current transformer and thermal overcurrent relay rather than a thermostat. The commenter also stated that this type of protection would not be dependent upon control power and would still be able to deenergize the primary of the transformer. MSHA agrees with this comment. The final rule is changed to allow more flexibility in the use of thermal protection. It permits the use of a current transformer and a thermal overcurrent relay to provide required overtemperature protection.

Paragraph (a)(5) of the final rule, like the proposed rule, requires high-voltage motor and shearer circuits to be provided with instantaneous ground-fault protection set at not more than 0.125-ampere. This provides highly sensitive and responsive ground-fault detection systems, using existing technology, for high-voltage circuits supplying electric face equipment. Protective devices are required to operate instantaneously, greatly reducing the likelihood of fires and shock hazards caused by ground faults. Some commenters suggested that the instantaneous ground-fault protection be set at not more than 0.125-ampere if the full-load current of the circuit does not exceed 200 amperes and set at not more than 0.200-ampere if the full-load current of the circuit exceeds 200 amperes. These commenters pointed out that it is very difficult to produce ground-fault current transformers that can reliably discriminate between small ground-fault currents and larger motor starting currents. They further stated that, when the full load current of a circuit exceeds 200 amperes, it is reasonable to expect motor starting currents to exceed 2,000 amperes and that a small increase in the setting of the ground-fault protection is justified for certain high-current circuits. Finally, they stated that a 0.200-ampere setting would still be less than 40 percent of the maximum ground-fault current. Ground-fault devices are used to detect low levels of fault currents during a grounded phase condition. These sensitive devices can be influenced by extremely large values of motor starting current.

MSHA has evaluated these comments and determined that there are sensitive ground-fault protective devices commercially available that have been successfully used to respond to the conditions described by the commenters. These devices can safely and reliably operate at 0.125-amperes or less even on systems having higher motor-starting currents. A large number of existing high-voltage longwall systems use grounding resistors that limit ground-fault currents to 0.500-amperes. Raising the trip value of ground-fault devices protecting motor and shearer cables to 0.200-amperes would also have the device set at 40 percent of the current rating of the grounding resistor. This setting would be the same value as protective devices used on cables extending from power centers to motor-starter enclosures. Proper coordination of these protective devices with upstream devices may not be achievable if the trip setting is raised to 0.200-ampere. For this reason, the provision is unchanged from the proposed rule.

Paragraph (a)(6) of the final rule, like the proposed rule, allows time delay settings, not to exceed 0.25 second (15 cycles), of ground-fault protective devices to provide coordination with the instantaneous ground-fault protection of motor and shearer circuits. This provision limits the time lapses between actuation of the section power center ground-fault protective devices and those located in the motor-starter enclosure. Time delay settings allow coordination and selective tripping of circuit protective devices. This coordination and selective tripping also assures that the entire circuit deenergizes quickly to reduce exposure to shock hazards.

A commenter wanted a time delay of 0.1 second (6 cycles) for ground-fault protection for high-voltage motors. The commenter described situations where nuisance tripping occurred during starting and stopping of the motor and a time delay of 0.1 second would solve the problem. MSHA has evaluated this comment and has determined that technology is available and currently used by industry to alleviate this condition without changing the time delay. Most ground faults occur between the motor-starter enclosure and the motors or shearers. These ground faults must be removed as quickly as possible. Another commenter wanted to add wording to define the total time for ground-fault protection as 0.4 second (24 cycles) maximum for all devices. Most longwall systems now utilize two ground-fault protective devices with a time delay of 0.25 second (15 cycles) which provides adequate time for selective tripping. Thus, the final rule is unchanged from the proposed rule.

Paragraph (a)(7) of the final rule, like the proposed rule, requires an undervoltage protection device that operates on loss of voltage to cause and maintain the interruption of power to a circuit. The rule reduces the likelihood that miners will be pinned or crushed due to the automatic restarting of the equipment. A commenter suggested another means of compliance by using a ''momentary start contactor with a seal in circuit.'' In response, the rule, unchanged from the proposed rule, is performance oriented and permits any undervoltage protection provided by a device that operates on loss of voltage. Therefore, any voltage sensing device, including the method specified by the commenter, that would prevent the automatic reclosing of the circuit protective device as specified in paragraph (a) will meet the requirements of the final rule.

Paragraph (b) of the final rule, like the proposed rule, requires a single window-type current transformer to encircle the three-phase conductors for ground-fault protection. The equipment safety grounding conductors are prohibited from being passed through or connected in series with ground-fault current transformers. This configuration could defeat ground-fault protection and result in hazardous voltage on equipment frames. A single window-type current transformer must be used to provide the ground-fault protection required by paragraph (a)(4)(i) for circuits extending from the section power center to the motor-starter enclosures. It also requires the same type current transformer for ground-fault protection specified in paragraph (a)(5) for:

(1) High-voltage motor circuits extending from the motor-starter enclosures;

(2) The shearer motor circuits extending from the section power center; and

(3) Motor enclosures.

Some commenters suggested this provision should allow for alternative components if they provide equivalent or improved protection. MSHA, however, is unaware of any alternative device that provides equivalent

protection and the commenter did not specify any equivalent devices. The use of a single window-type current transformer to encircle only the three phase conductors assures that sensitive ground-fault devices will be able to detect all ground faults exceeding the setting of the device. Detection devices inserted in the ground wire may not detect all ground-fault currents and could compromise the integrity of the ground circuit. Therefore, paragraph (b) of this section remains as proposed.

Paragraph (c) of the final rule requires a ground-fault test circuit for each ground-fault current device. This test circuit must inject a current of 50 percent or less of the current rating of the grounding resistor to verify that a ground-fault condition causes the corresponding circuit-interrupting device to open. This testing procedure helps determine if ground-fault current devices function at required current levels. It will also test the sensitivity of each device to ground-fault currents. The proposed rule required each ground-fault current device to be provided with a test circuit that would inject a current of 50 percent or less of the current rating of the grounding resistor and cause each corresponding circuit-interrupting device to open. Some commenters suggested that this requirement be limited to ground-fault circuit devices required by paragraphs (a)(4)(i) and (a)(5) of this section. These commenters also suggested that the ground-fault test circuit inject a primary current into the current transformer that does not subject the equipment to an actual phase-to-ground fault. They pointed out that primary current injection tests of the ground-fault devices are safe and effective tests for those devices. They further stated that testing of the backup ground-fault devices located across the grounding resistor, such as the potential transformer and overtemperature relay, would require application of an actual phase-to-ground fault and could be hazardous to both personnel and equipment. MSHA agrees with the commenters that this method of testing is considered to be safe and effective in determining whether a device trips at its setting. In response to these comments, the final rule modifies the proposed rule, to require each ground-fault current device required by paragraphs (a)(4)(i) and (a)(5) to have a test circuit that passes a primary current of 50 percent or less of the maximum ground-fault current through the current transformer and cause the corresponding circuit-interrupting device to open.

Paragraph (d) of § 75.814, like the proposed rule, prohibits the use of circuit-interrupting devices that automatically reclose. Automatic reclosure of the circuit-interrupting device allows immediate reenergization of a circuit that has sustained a fault. Faults occur in underground electrical systems as a result of damage from roof falls or equipment insulation failure. Under such circumstances, the use of automatic reclosing circuit-interrupting devices could create shock and fire hazards when a short-circuit or ground-fault condition exists in the circuit. There were no comments on this paragraph and it remains as proposed.

The final rule includes an additional paragraph (e) that is partially derived from § 75.518–1—*Electric equipment and circuits; overload and short circuit protection; minimum requirements.* This was suggested by joint commenters from industry and labor to address concerns regarding the use of cables in parallel. The commenters suggested that when two or more cables are used to supply power to a common connection point (bus), each cable be provided with ground-wire monitoring so that all cables are deenergized when the grounding conductor becomes severed or open. In support of this suggestion, the commenters noted that when two or more cables are connected in parallel, shock hazards will exist if one cable has been disconnected and the other cable is left energized. MSHA agrees. The Agency has been incorporating this additional requirement into petitions for modification of § 75.1002 during the last four years. The final rule requirement that parallel power cables be installed with ground-wire monitor systems addresses this concern. Ground-wire monitoring in power cables has been an inherent part of the developing high-voltage longwall technology over the last 16 years. In addition, under the final rule, parallel circuits installed after the effective date of this rule must be protected by a single circuit-interrupting device rather than have circuit-interrupting devices operating in parallel unless such devices are mechanically and electrically interlocked. This is supported by the fact that 30 CFR § 75.518–1 requires overcurrent devices to conform to the provisions of the National Electric Code which prohibits parallel connections of circuit-interrupting devices.

Section 75.815 Disconnect Devices

Section 75.815 of the final rule includes requirements pertaining to disconnecting devices located in longwall power centers and in longwall equipment motor controllers that provide a safe means of disconnecting power during the performance of electrical work. It includes design and performance requirements pertaining to electrical ratings, lockout, grounding, and maintenance requirements pertaining to compliance with part 18 of Title 30 CFR. This section was derived, in part, from existing §§ 75.511, 75.520, 75.601, 75.705, and 75.808.

Paragraph (a) as in the proposed rule, requires a disconnecting device in addition to the circuit-interrupting device (required by § 75.814) in the power center that supplies power to longwall equipment. This disconnecting device provides visual evidence that the circuit is deenergized. Either a disconnecting switch or cable coupler would suffice to satisfy this requirement. Disconnecting devices in power centers facilitate the deenergization process prior to performance of electrical work. Figures I–1 and I–2 in Appendix A provide guidance for compliance with this requirement. The Agency did not receive any comments on this provision and it is unchanged from the proposed rule.

Paragraph (b) of the final rule, like the proposed rule, establishes maintenance requirements for disconnecting devices in motor-starter enclosures. Section 75.815(b) requires that disconnect devices be maintained in accordance with the approval requirements of paragraph (f) of § 18.53—*High-voltage longwall mining systems.* Section 18.53(f) requires that the load-side power conductors be grounded when the disconnecting device is open. This provision guards against the occurrence of electrical accidents by requiring the circuit disconnect device to ground the disconnected circuit before work is performed on the circuit. The final rule assures that a properly maintained safe means of deenergizing longwall circuits and equipment is readily available for use during routine operation or in the event of an emergency. Additionally, the final rule provides for safe deenergization of high-voltage circuits in the motor-starter enclosure, or equipment supplied power through the enclosure during testing and troubleshooting work. MSHA encourages mine operators to continue using additional disconnecting devices that are already installed in many existing longwall systems.

Paragraph (b) requires a caution label on the cover of each starter enclosure compartment containing the main disconnecting device. This caution label must warn miners against entering the compartment before deenergizing the incoming high-voltage circuits to the

compartment. It warns miners that the line side of the disconnect device may be energized when the device is opened and cautions them to deenergize incoming power before removing any covers. It also helps to assure that miners deenergize power to starter enclosures before removing any of the covers. There were no comments received on this provision so the final rule is unchanged from the proposed rule. MSHA recognizes that the mining industry has taken safeguards by using additional caution labels to warn miners of stored energy devices (capacitors). We encourage the industry to continue the safety practice of using caution statements that warn miners to ground the capacitors before performing work on electric circuits.

Paragraph (c) of the final rule, like the proposed rule, requires disconnecting devices to have voltage and current ratings compatible with the circuits in which they are used. This requirement ensures safe operation of these devices during normal use. The Agency received no comments on this provision. It remains the same as the proposed rule.

Paragraph (d)(1) of the final rule, like the proposed rule, requires that disconnecting devices be designed to provide visual evidence that all ungrounded power conductors are disconnected when the device is open. Visual evidence means the ability to observe the physical separation of the control and power conductors without removing any covers. There were no comments received on this provision and no changes were made to the proposed rule.

Paragraph (d)(2) of the final rule, like the proposed rule, requires that disconnecting devices be equipped to ground all power conductors when the device is ''open''. This requirement allows the circuit to be properly grounded before any work is performed on the electric circuits or equipment. It also allows discharging of any existing voltage due to capacitance between the power conductors and ground. The Agency did not receive any comments on this provision. It remains unchanged from the proposed rule.

Paragraph (d)(3) is unchanged from the proposed rule. It requires each device be equipped to lock the device in the open position. This ensures that the circuit being worked on remains deenergized until work is completed. There were no comments received in response to this provision.

Paragraph (e) of the final rule, like the proposed rule, requires that disconnecting devices, except those installed in explosion-proof enclosures, be capable of interrupting load currents without creating hazardous conditions. If the device is not designed for full load interruption, the device must be installed so that a circuit-interrupting device will deenergize the incoming power circuit before the disconnecting device opens. Use of improperly rated devices could result in the destruction of the device and injuries to miners due to flash burns or flying parts. The final rule further requires that disconnecting devices installed in explosion-proof enclosures be maintained in accordance with the approval requirements of § 18.53(f)(2)(iv) of part 18. This provision specifies that disconnecting devices be designed and installed to cause the current to be interrupted automatically prior to the opening of the contacts of the device. The Agency did not receive any comments on this provision so it remains the same as the proposed rule.

Some commenters suggested that a new paragraph (f) be added to require that any additional disconnecting devices used to deenergize a portion of the longwall equipment meet the requirements of paragraphs (c), (d), and (e). They stated that it is often necessary to maintain power on part of the longwall equipment in order to safely and efficiently perform electrical work on another part of the equipment. For example, they stated that a disconnecting device for the shearing machine circuit will permit electrical work on a deenergized shearing machine while maintaining power on the rest of the longwall. Under the final rule, individual disconnecting devices, such as cable couplers, may be used to isolate individual pieces of equipment for the purpose of performing maintenance. The final rule requires that all additional disconnecting devices satisfy the requirements of paragraphs c, d, and e. Therefore, the Agency believes that an additional provision is not necessary.

Section 75.816 Guarding of Cables

This rule is derived in part from existing § 75.807—*Installation of high-voltage transmission cables* and addresses guarding of high-voltage cables supplying longwall equipment. Until this rule, § 75.807 related to high-voltage cables in areas not in by the last open crosscut or not within 150 feet from the pillar workings. In addition to the § 75.807 requirements, § 75.816 of this final rule requires guarding of high-voltage cables where persons regularly work or travel over or under the cables and where the cables leave cable handling or support systems in the longwall face areas or are within 150 feet of the pillar workings. As provided in § 75.807, cables installed six and one half feet or more above the mine floor satisfy these requirements by location. Guarding minimizes the possibility of miners inadvertently contacting the cables. Also, cable guarding must consist of grounded metal or nonconductive flame-resistant material. High-voltage cables used to supply longwall equipment could present shock and fire hazards if the cables are damaged or defective.

Paragraph (a)(1) of the final rule, like the proposed rule, requires that cables be guarded where persons regularly work or travel over or under the cables. This minimizes accidental contact with cables. There were no comments received on this provision and it is unchanged from the proposed rule.

Paragraph (a)(2) of the final rule, like the proposed rule, requires guarding where the cables leave cable handling or support systems to extend to electric components. This provision prevents physical damage from stress and flexing that might cause shock and fire hazards. The Agency did not receive any comments on this provision and it remains the same as in the proposed rule.

Paragraph (b) of the final rule requires guarding of high-voltage cables to minimize the possibility of inadvertent contact with cables and to protect high-voltage cables from physical damage. Guarding must be constructed of grounded metal or nonconductive flame-resistant material. This standard provides minimum requirements for the physical and electrical protective characteristics of the guarding. The proposed rule required that guarding prevent miners from contacting high-voltage cables.

One commenter suggested that the provision specifically permit the use of either continuous guarding or overlapping sections of guarding. According to this commenter, overlapping sections of guarding achieve the safety goal of the provision and would reduce time-consuming and expensive repairs that could involve thousands of feet of cable to repair a small section. In response to this comment, the rule specifies the locations where cables are required to be guarded. Under the rule, the guarding material must cover the cables and continuous or overlapping guarding may be used. When joining sections of metal guarding, steps should be taken to assure proper grounding.

Other commenters suggested that this section require that guarding ''minimize'' rather than ''prevent'' the possibility of miners contacting the cables. They stated that it is not

practical to design guarding that would prevent miners from contacting the cables. This often occurs when miners are attempting to guide or train cable into its holding trough when it is loose or falls out. They suggested it is possible to design guarding that would ''minimize'' contact or ''block access'' to the cable. MSHA agrees with this commenter and modified the proposed rule. In response to these comments, this revised provision, requires a physical barrier consisting of guarding material between the cables and miners to minimize inadvertent contact with the cables, and requires mechanical protection for the cables. Also, § 75.818 of the final rule prohibits intentional contact with cables except for the purpose of training (guiding) motor and shearer cables with the use of proper protective equipment.

Section 75.817 Cable Support Systems

This section of the rule addresses handling and support systems of high-voltage cables suppling longwall equipment. Under the final rule, longwall mining systems must be equipped with cable handling and support systems that are constructed, installed, and maintained to protect high-voltage cables from damage and to minimize the possibility of miners inadvertently contacting the cables. Under the proposed rule, these systems were required to prevent miners from contacting high-voltage cables. High-voltage cables used to supply longwall equipment can present shock and fire hazards if the cables become damaged or defective. This section of the final rule provides the necessary protection to cables and miners by minimizing exposure to damaged or defective cables. This section is derived, in part, from existing requirements in § 75.807 and addresses new systems developed by the mining industry to mechanically handle and support cables. These systems are presently used on high-voltage longwall mining systems to minimize damage to the cables.

One commenter suggested that a provision be added to this section that allows the installation of guarded high-voltage cables in cable handling and support systems where hydraulic hoses and low- and medium-voltage cables are also installed. In response to this comment, high-voltage longwall equipment and associated cables are currently required by existing § 18.36(b)—*Cables between machine components* to be isolated from hydraulic lines. Also, existing § 75.807 currently requires that the high-voltage cables be placed in a manner to prevent contact with other low-voltage circuits. Isolation and placement help guard against fire and assures protection of electric cables, which could be damaged, if hydraulic lines are ruptured or conductor insulation fails. Based on MSHA experience, acceptable methods which meet § 18.36(b) requirements will be determined during the part 18 approval process. Guarding of cables by proper isolation and placement is an acceptable method to meet this requirement.

Other commenters suggested that the wording of the rule be changed to ''longwall mining equipment shall be provided with cable handling and support systems that are constructed, installed, and maintained to minimize the possibility of miners contacting the cables and to protect the high-voltage cables from damage.'' We agree with the commenters as stated in the previous discussion of § 75.816. The final rule requires that cable support systems minimize the possibility of inadvertent contact instead of preventing contact.

Section 75.818 Use of Insulated Cable Handling Equipment

This section of the final rule addresses the types of personal protective equipment that may be used when it is necessary to handle high-voltage longwall cables, the examination for defects or damage prior to use, and the intervals at which high-voltage protective equipment must be tested. Its purpose is to provide protection against electric shock hazards associated with the handling of energized high-voltage longwall cables. This section is derived, in part, from existing requirements in §§ 75.705–6—*Protective clothing; use and inspection,* 75.705–8—*Protective equipment; testing and storage* and 75.812—*Movement of high-voltage power centers and portable transformers; permit.*

Paragraph (a) of the final rule, like the proposed rule, requires that personal protective equipment be used when training or guiding, by hand, a high-voltage longwall cable into the cable handling trough when the cable inadvertently comes out. Commenters suggested that the list of protective equipment be expanded to include facial protection and protective clothing, and that the protective equipment also be capable of providing protection from a cable explosion. They stated that additional protection is needed for persons who handle high-voltage longwall cables, since persons have been burned when power conductor insulation deteriorates within the cable and the power conductors fault or contact each other, causing the cable to explode. MSHA disagrees. Shielded-type cables, required by existing regulations, provide the necessary protection for miners by limiting or preventing electrical arcing and flashover within the cable. This protection occurs as long as the cables are used in conjunction with proper mechanical protections required under § 75.817, and with proper maintenance of electrical protective devices required under § 75.814. Therefore, paragraph (a) of this final section remains as proposed.

Paragraph (b) of the final rule requires high-voltage insulated gloves, sleeves, and other insulated personal protective equipment, to have a Class 1 (7,500 maximum use volts) or higher rating that has been established by a nationally recognized consensus standard. The protective equipment must be: (1) Examined prior to each use for signs of damage or defects; (2) destroyed or removed from the underground area of the mine if found damaged or defective; and (3) electrically tested every six months according to a nationally recognized consensus standard. This provision protects against electrical shock hazards by requiring personal protective equipment to be rated for a maximum use voltage and examined before each use to determine if the equipment is safe to use. Paragraph (b) of the proposed rule required all personal protective equipment to be rated for 20,000 volts; examined before each use for visible signs of damage; removed from the underground area of the mine when damaged or defective; and electrically tested every six months.

A commenter suggested that this paragraph be modified to allow gloves to be rated for a minimum of 5,000 volts and tested every six months as described in a nationally recognized consensus standard. The Agency is not aware of any recognized consensus standards that rate gloves, sleeves, and other personal protective equipment at 5,000 volts. The commenter also stated that damaged or defective gloves should be permitted to be either removed from the underground area of the mine or destroyed.

Another commenter stated that insulated personal protective equipment should be electrically tested by the manufacturer in accordance with ASTM standards and be rated for at least the maximum nominal voltage of the circuit. The commenter also stated that personal protective equipment should be examined before each use for visible signs of damage or defects and be electrically tested at least every six months or when there is any sign of excessive wear. This commenter stated that the visible and electrical tests

should be conducted in accordance with American Society for Testing and Materials (ASTM) standards.

In response to the commenters' concerns, we agree that safety would be enhanced by adopting the ASTM standard. We have revised paragraph (b) of the proposed rule. The final rule requires insulated protective equipment, including high-voltage gloves and sleeves, to be rated a Class 1 or higher (maximum use voltage of 7,500 volts). Paragraph (b)(1) requires that this equipment be examined before each use for visible signs of damage or defects. This section requires users of protective equipment to examine it for hazardous conditions, including excessive wear. For example, a method commonly used to detect damage in insulating gloves is to test the rubber gloves by rolling the cuff tightly toward the palm of the glove in such a manner that air is entrapped inside the glove. Puncture detection may be enhanced by listening for escaping air or by feeling escaping air against the face.

In response to commenters, the Agency has revised paragraph (b) in the final rule to allow defective personal protective equipment to be destroyed or removed from the mine. The Agency agrees with the commenter that destroying this equipment when it becomes defective is as effective as removing it from the underground mine.

MSHA also received comments suggesting that insulating protective equipment be tested every six months in accordance with nationally recognized standards. The Agency agrees with this commenter and has revised paragraph (b) to require that all insulated handling equipment for use with high-voltage longwall cables be electrically tested every six months in accordance with a nationally recognized consensus standard contained in the ASTM F496–97, ''Standard Specification for In-Service Care of Insulating Gloves and Sleeves.'' The purpose of these formal testing procedures for high-voltage cable handling equipment is to provide necessary safety protections for miners and ensure that unknown equipment defects will be detected before they are a hazard to miners.

Section 75.819 Motor-Starter Enclosures; Barriers and Interlocks

Section 75.819 of the final rule, like the proposed rule, requires separation by location, partitions, or barriers of low- and medium-voltage circuits from high-voltage circuits in motor-starter enclosures and requires cover interlock switches to be installed on the cover of any motor-starter compartment containing high-voltage components. The compartment separations and interlock switches must be maintained in accordance with paragraphs (a) and (b) of § 18.53—*High-voltage longwall mining systems.* The purpose of § 75.819 is to help guard against miners coming in contact with energized internal components of high-voltage electric equipment through proper maintenance of safety devices that assure deenergization when any cover that provides access to energized high-voltage components is removed. Compartment separation also helps assure that persons are not exposed to adjacent energized high-voltage components or circuits after gaining access to compartments containing control, communication, or other low- and medium-voltage circuits.

This provision provides automatic protection for miners who may inadvertently remove a cover exposing energized high-voltage circuits should the wrong circuit be disconnected. There were no comments received on this section of the proposed rule and it remains as proposed.

Section 75.820 Electrical Work; Troubleshooting and Testing

Section 75.820 is directed at protecting miners while they are performing electrical work, including troubleshooting and testing, and the removal of belt structure. This section is derived, in part, from existing §§ 75.509—*Electric power circuit and electric equipment; deenergization,* 75.511—*Low-, medium-, or high-voltage distribution circuits and equipment; repair,* and 75.705—*Work on high-voltage lines; deenergizing and grounding* and addresses requirements for performing work on all circuits and equipment associated with high-voltage longwalls. This section applies to all low-, medium-, and high-voltage circuits and equipment associated with high-voltage longwalls. The requirements are similar to those in existing §§ 75.509 and 75.511 for work on electric circuits and equipment generally, except with additional requirements applicable to high-voltage longwall installations. These requirements include personnel qualifications and safe work procedures, including safety equipment when troubleshooting and testing, and methods to guard against contact with energized high-voltage cables during the installation and/or removal of belt structure(s). The final rule for § 75.820 is identical to the proposed rule except for changes to § 75.820(a), which is revised based on a recent Federal Mine Safety and Health Review Commission decision and §§ 75.820(d)(3) and 75.820(f) which MSHA revised due to comments. The revisions address: (1) The fact that persons qualified under § 75.153—*Electrical work; qualified person* must be able to perform electrical work on *all* circuits and equipment; (2) The type of gloves that must be worn by persons performing troubleshooting and testing; and (3) The methods used to guard against contact with a high-voltage cable during installation and/or removal of belt structure.

Paragraph (a) of the final rule requires that electrical work on all circuits and equipment associated with high-voltage longwalls be performed only by persons qualified, in accordance with § 75.153, to perform electrical work on all circuits and equipment, not just high-voltage circuits and equipment. This change is consistent with the recent Federal Mine Safety and Health Review Commission decision, *Secretary of Labor* v. *Black Mesa Pipeline, Inc.* 22 FMSHRC 708, 715 (June 30, 2000). That decision concluded that § 75.153 requires that a ''person qualified'' be knowledgeable of high-, medium-, and low-voltage circuits and equipment. Therefore, for clarification purposes, the language of this final rule has been modified to conform with this decision and the plain meaning of § 75.153. This requires that a person qualified to work on electrical circuits be knowledgeable of low-, medium- and high-voltage circuits. The Agency currently requires that qualification in all voltages be obtained before a person can become qualified under § 75.153. The requirement that persons performing electrical work be qualified for all voltages assures that persons performing work on low- and medium-voltage circuits are qualified to identify hazards that may exist on high-voltage circuits in close proximity of their work.

Some commenters suggested that paragraph (a) state that electrical work on all high-voltage circuits and any enclosure containing high-voltage components shall be performed only by persons qualified under § 75.153 to perform electrical work only on high-voltage circuits and equipment. These commenters indicated that the proposed rule would not permit persons qualified under § 75.153 to perform electrical work only on low- and/or medium-voltage circuits or equipment or perform any electrical work on circuits or equipment associated with a high-voltage longwall. The commenters further indicated that certain subsystems of the longwall are completely isolated from high-voltage circuits and equipment such as: lighting systems, communication systems, shield

control systems, hydraulic pump control systems, battery chargers, air compressors, and rock dusters. However, because many low- and medium-voltage circuits associated with high-voltage longwalls are in close proximity to the high-voltage circuits, MSHA believes it is important that anyone performing electrical work on the high-voltage longwall be knowledgeable about low-, medium- and high-voltage circuits. And, as noted above, a person qualified under § 75.153 must be knowledgeable of all voltage circuits.

Since all the circuits cannot be totally isolated, it is important that qualified persons working on the circuits of lower voltages be aware of the hazards of high-voltage circuits. Another commenter inquired as to what the high-voltage qualification requirements were and suggested that MSHA ensure that appropriate training is defined and required. MSHA's existing standard in § 75.511—*Low-, medium-, or high-voltage distribution circuits and equipment; repair* requires that only persons qualified in low-, medium- and high-voltages perform high-voltage work, and § 75.153 sets forth the procedures for their qualification. Additionally, existing § 75.160—*Training programs* requires an MSHA approved plan for retraining qualified persons. Another commenter requested that wording be added to allow anyone to perform high-voltage work under the supervision of a qualified person. Due to the hazards previously described, only qualified electricians perform high-voltage work. Therefore, except for the clarifications noted above, paragraph (a) of this section remains as proposed.

Generally, paragraphs (b)(1) through (b)(4) of § 75.820, like the proposed rule, require safety precautions to be taken by qualified electricians prior to performing electrical work. The qualified electrician is responsible for assuring that the electrical circuit is properly deenergized, that the contacts of the circuit disconnecting device are open, and that the disconnecting device is locked out with a padlock and tagged. These precautions assure that the affected circuit has been properly deenergized and disconnected so that persons performing work are not exposed to shock, electrocution, or burn hazards. Without taking precautions, such as properly locking out and tagging the affected circuit, qualified electricians would be exposed to shock and electrocution risks if someone were to inadvertently reenergize the circuit.

Paragraph (b)(1) of the final rule specifically requires that a qualified person deenergize the circuit or equipment with a circuit-interrupting device. There were no comments on paragraph (b)(1) of the proposed rule. This paragraph of the section remains as proposed.

Paragraph (b)(2) of the final rule requires that a qualified person open the disconnecting device when performing work on circuits and equipment, and if high-voltage, ground the circuits. Opening the disconnect device deenergizes the circuit which, along with grounding, protects the person working on the circuit from shock and electrocution hazards. A commenter stated that in addition to grounding the circuit prior to work being performed, that grounding hot sticks (a collapsible non-conductive pole used to de-energize electrical circuits) rated at 4,160 volts should be available at each power center and a proximity tester should be used by the qualified electrician to determine that the circuit is deenergized. In response to this comment, § 75.815(b) of the final rule requires that the disconnecting devices be maintained in accordance with the approval requirements of paragraph (f) of § 18.53. Section 18.53(f) in turn requires that the disconnecting devices ground the circuit when ''open.'' In addition, the requirement in paragraph (b)(3) of § 75.820 places responsibility on each qualified person to lock out the disconnecting device for the high-voltage circuit prior to performing work. Therefore, MSHA concludes that equipping power centers with grounding hot sticks, clamps, and proximity testers, as suggested by the commenter, is not necessary. Therefore, paragraph (b)(2) of this section remains as proposed.

Paragraph (b)(3) of the final rule, like the proposed rule, requires that disconnecting devices be locked with an individual padlock by each person performing work. Individual padlocks, removable only by the persons who installed them, place responsibility on the persons performing work to assure their personal safety. This should prevent accidental reenergization of equipment or circuits before all persons have completed work. The danger and accident history of reenergization of circuits before work is completed require such measures for the protection of miners against electrocution or electric shock. A commenter suggested that the section be reworded to permit the oncoming worker to install his/her lock, and the departing worker to remove his/her lock at the change of shifts. Another commenter suggested that MSHA recognize that service or maintenance in many cases is performed by a new crew or group of people and that a group lockout procedure be allowed. This commenter suggested that primary responsibility can be vested with an authorized employee when more than one group is working on the equipment, so that an authorized person from each group may lockout the equipment. A review conducted by the Agency in 1999 revealed that during the period 1970 to 1999, a total of 145 fatal accidents occurred by miners contacting energized circuits. Data further revealed that during a five year period between 1994 and 1999, a total of nine fatal accidents were related to failure to lockout disconnecting devices. The review also revealed that deaths and injuries had also occurred when equipment was energized before all persons had completed their work. Furthermore, the National Safety Council in *Data Sheet 237 Revision B, Methods of Locking Out Electrical Switches (1971)*, recommends that individual, not group, type lockout procedures be used. This publication is available in the rulemaking record. Consistent with Agency experience and safety recommendations, the final rule requires individual lockout rather than group lockout. MSHA is confident that this system provides the necessary safety protection because persons assigned to place and remove their own locks are more cognizant of and responsible for their own security, and more likely to take the steps necessary to assure proper deenergization. This also reduces the risk of error due to lack of communication or inadvertent reenergization. For these reasons, the paragraph remains unchanged from the proposed rule.

Paragraph (b)(4) of the final rule, like the proposed rule, requires tags used on deenergized circuits and equipment to identify each person performing work and the circuit or equipment on which work is being performed. There were no comments on this paragraph of the proposed rule and it remains as proposed.

Paragraph (c) requires, like the proposed rule, that only the persons who install a padlock and tag be permitted to remove them. This provision also provides for an exception where an operator could authorize someone else to remove the lock and tag if the person who installed them is unavailable at the mine. Such authorized person is required to be qualified to perform electrical work. Additionally, the person who had originally installed the lock and tag must be informed of the lock removal before resuming work on the circuit or equipment. A commenter stated that in the absence of the person who installed

the lock, the mine operator may designate a qualified electrician to remove the lock after it has been determined that all other affected persons are not exposed to a hazard. Paragraph (c) of the final rule requires locks to be removed by the person who installed them or by qualified persons authorized by the operator, if that person is unavailable at the mine.

Paragraph (d) of the final rule requires that certain safety procedures be followed when troubleshooting and testing energized circuits. This includes limiting troubleshooting and testing of energized circuits only to low- and medium-voltage systems. In addition, only qualified electricians wearing properly insulated rubber gloves are permitted to perform this work and only for the purpose of determining voltages and currents. This provision recognizes that, in some instances, it is necessary for circuits or equipment to remain energized for troubleshooting and testing. For example, in order to understand the nature of problems within a circuit, it may be necessary to take voltage or current readings while the circuit is energized.

Paragraph (d)(1) of the final rule, like the proposed rule, limits troubleshooting and testing of energized circuits only to low- and medium-voltage systems. Since troubleshooting and testing energized circuits is known to be inherently hazardous work, the particular skills and training of a qualified electrician are necessary for performance of these tasks. Troubleshooting and testing is limited to low- and medium-voltage energized circuits, primarily due to insulation ratings of available troubleshooting and testing equipment. Insulation ratings on equipment commonly used to troubleshoot and test in underground mines are insufficient to protect persons if such equipment is used to troubleshoot and test high-voltage circuits.

A commenter suggested that troubleshooting of energized circuits ranging from 120 to 1,000 volts (low to medium voltage) should be prohibited. This commenter indicated that the industry has already demonstrated that high-voltage longwalls can be installed, commissioned, and maintained without maintenance personnel being exposed to any voltage higher than 120 volts. The commenter further stated that if multiple utilization voltages are required in the same compartment, then each supply should have a disconnect device, and cover switches should be arranged to trip circuit-interrupting devices to cut off both voltages. Some high-voltage longwalls are designed with equipment supplied from low- and medium-voltage as well as high voltage. These hybrid-type longwall systems include both high-voltage and low- and medium-voltage equipment. This provision allows troubleshooting and testing of low- and medium-voltage circuits associated with these hybrid longwalls. Based on Agency experience with petitions for modification allowing such testing, troubleshooting, and testing of low- and medium-voltage circuits can be safely performed with proper test instruments, and with use of protective gloves that are commercially available. Therefore, paragraph (d)(1) of this section remains as proposed.

Paragraph (d)(2) of the final rule permits troubleshooting and testing of energized circuits only for the purpose of determining voltages and currents (amperes). Some commenters suggested that paragraph (d)(2) be changed to allow troubleshooting and testing to determine waveform or other electrical diagnostic testing as well as voltages and currents. The final rule, as written, is responsive to the commenter's suggestion because evaluation of waveform or diagnostic testing is normally considered to be a method of measuring voltage and current. Paragraph (d)(2) of this section remains as proposed.

Paragraph (d)(3) of the final rule requires that troubleshooting and testing of energized circuits be performed by persons qualified under § 75.153 who wear protective gloves when the voltage of the circuit exceeds 40 volts. This should prevent accidents related to contact with energized circuits while troubleshooting and testing. These gloves will provide the insulation protection necessary if a miner has inadvertent contact with energized circuits during troubleshooting and testing. A commenter stated that the circuit is designed to permit troubleshooting of 120-volt alternating current (VAC) control power. During this period, high voltage is not present while the normal/test auxiliary switch is in the ''test'' position and the incoming high-voltage disconnect is in the ''open/grounded'' position. This commenter suggested that gloves be rated for 120 VAC rather than the nominal voltage of the circuit. The Agency is not aware of any gloves rated for less than 1,000 volts. The rating of gloves is determined commercially through formal testing procedures established by national standards.

Another commenter suggested that this paragraph be changed to permit the use of dry work gloves when troubleshooting low- and medium-voltage circuits and to permit troubleshooting of high-voltage circuits. The commenter added that wearing rubber gloves should be required when working with high-voltage circuits; however, requiring that rubber gloves be worn when troubleshooting low- and medium-voltage circuits would diminish safety. In response to these comments, MSHA believes that rubber gloves do not permit sufficient dexterity, as do dry cloth gloves, for the safe troubleshooting of low- and medium-voltage circuits. For example, an ohm meter has small controls which are difficult to operate while wearing rubber gloves and the small metal probes used with the ohm meter are hard to pick up while wearing rubber gloves. A serious accident could result if probes were improperly placed in an energized circuit or dropped in close proximity to voltages up to 995 volts. In contrast, dry work gloves allow for manual dexterity while providing adequate protection. The commenter specified that his company has safely used dry work gloves when troubleshooting low- and medium-voltage circuits for 15 years. The commenter further stated that proposed § 75.820(d) would conflict with existing § 75.509—*Electric power circuit and electric equipment; deenergization* in two respects. The first is that § 75.509 permits troubleshooting of high-voltage circuits, as well as low- and medium-voltage circuits. In contrast, proposed § 75.820(d)(1) would permit troubleshooting only on low- and medium-voltage circuits. The second is that proposed § 75.820 conflicts with MSHA's interpretation of § 75.509 concerning situations where insulated rubber gloves are required. MSHA's Program Policy Manual states:

> Work gloves in good condition are acceptable for troubleshooting or testing energized low-or medium-voltage circuits or equipment. *High-voltage gloves, rated at least for the voltage of the circuit, are required for troubleshooting or testing of energized high-voltage circuits or in compartments containing exposed energized high-voltage circuits. (This portion has been corrected by MSHA Program Policy Update V–15.)*

The commenter further stated that in order to be consistent with § 75.509, as well as prudent mining practices, proposed § 75.820(d) should be changed to permit both troubleshooting of high-voltage circuits and use of dry work gloves for troubleshooting low- and medium-voltage circuits.

In response the Agency states that existing § 75.705—*Work on high-voltage lines; deenergizing and grounding* specifically applies to high-voltage circuits out from (outby) the longwall mining faces or pillar workings. Section

75.705 specifically prohibits work on high-voltage lines underground in relation to troubleshooting and testing of high-voltage circuits. Section 75.509 generally applies to all electrical circuits and is less restrictive. This final rule specifically applies to high-voltage circuits on longwalls and is consistent with the safety requirements of existing § 75.705.

Based on Agency data and experience, it is our view that attempts to troubleshoot and test energized high-voltage circuits using standard test equipment, such as volt-ohm-meters, commonly used on low- and medium-voltage circuits, is extremely hazardous. MSHA prohibits troubleshooting and testing of energized high-voltage circuits and equipment. The use of hand-held proximity testers to determine shielding continuity and energized circuits is allowed under this regulation. Troubleshooting and testing routinely involves the use of portable test instruments equipped with attached leads and metal probes used to move from point to point in a circuit for the purpose of determining voltage and/or current readings needed to target problem areas. Insulation ratings on equipment commonly used to troubleshoot and test are insufficient to protect persons if this equipment is used on high-voltage circuits. The commenter stated that the MSHA program policy manual permitted troubleshooting and testing of energized high-voltage circuits. After review, MSHA determined that this policy was inadvertently drafted in error and specifically conflicts with mandatory safety standard § 75.705. The error was corrected in MSHA Program Policy Update V–15. The printed-in-error version was never officially considered or enforced as MSHA policy.

Other commenters suggested—(1) that gloves not be required under the standard when the maximum circuit voltage does not exceed 40 volts; (2) that dry work gloves in good condition be required when the maximum circuit voltage does not exceed 150 volts or the circuit voltage exceeds 150 volts but is intrinsically safe; and (3) that insulating gloves, with protective coverings designed to prevent physical damage to the insulating material, be required when the maximum circuit voltage exceeds 150 volts and the circuit is not intrinsically safe.

MSHA agrees with some of the commenters' suggestions and has written the final rule to reflect these changes. The final rule requires the use of protective gloves when troubleshooting and testing circuits having voltages that exceed 40 volts. Based on MSHA electrical accident information and experience, 40 volts is the lowest voltage level range at which shock hazards are minimized. Other mandatory safety standards, such as §§ 77.515—*Bare signal or control wires; voltage,* 75.901—*Protection of low- and medium-voltage three-phase circuits used underground*, 75.902—*Low- and medium-voltage ground check monitor circuits,* and 77.902–1—*Fail safe ground check circuits; maximum voltage,* use 40 volts as a minimum safety voltage range level. Section 18.50—Protection against external arcs and sparks also uses 40 volts as a minimum voltage range level for shock hazard protection guidelines for electrical equipment frames. Dry work gloves, in good condition (free of holes, etc.) will be permitted on circuits where the voltage does not exceed 120 volts nominal and on circuits where the voltage exceeds 120 volts nominal but is intrinsically safe. The normal control circuit nominal voltage value is 120 volts for mining equipment. Section 75.1720—*Protective clothing, requirements* and MSHA policy allow miners to use dry gloves when working on circuits up to 1000 volts. Rubber insulating gloves rated for at least the nominal voltage of the circuit and equipped with leather protectors will be required to be used on circuits where the voltage exceeds 120 volts nominal but is not intrinsically safe. (See paragraphs (b)(3) and (b)(4)). Mine equipment typically has ratings such as 220-, 480-, 995-volts and higher. Rubber gloves are not commercially rated for each of these voltages. Rubber insulating gloves rated at 1,000 volts are commercially available at this time. The 1,000 volt rated gloves can be used on each of these circuits and, in fact, offer increased protection for troubleshooting and testing on circuits exceeding 120 volts.

MSHA's fatality data show that at least six fatalities have occurred since 1970 due to miners' contact with energized circuits while troubleshooting and testing. The provisions of § 75.820 address electrocution and shock hazards associated with troubleshooting and testing of the low- and medium-voltage portions of high-voltage longwalls and provide additional protection for persons performing work on these circuits.

Commenters suggested that the proposed rule be expanded to include facial protection, and protective clothing to minimize the risk of injury in case of a short circuit during troubleshooting and testing of an energized circuit. In support of this suggestion, commenters stated that these additional requirements were needed to protect persons from an electrical explosion, an electrical flash, and from flying debris. Commenters suggested that injuries could be minimized if protective clothing, such as a leather vest instead of polyester, was worn, as clothing made of material that melts could compound an injury.

In response, the Agency concludes that when mine operators and miners comply with the provisions of this final high-voltage rule, including proper testing, examination, and maintenance of circuits and equipment, and safe procedures during troubleshooting and testing, hazards such as flying debris, electrical arcing, and flashover can be avoided. Electrical arcing during troubleshooting and testing is normally due to either misapplication or misuse of test equipment. In some cases, electrical hazards may occur as a result of circuit insulation failure while troubleshooting. Under the final rule, only qualified individuals must be assigned to perform troubleshooting and testing. Further, they must perform thorough examinations, tests, and maintenance of circuits and equipment to help guard against the occurrence of injury due to electrical arcing caused by failure of insulation.

Paragraph (d)(4) of the final rule requires that rubber insulated gloves, when required, be rated at least for the nominal voltage of the circuit. This requirement was contained in paragraph (d)(3) of the proposed rule. Comments pertaining to this proposed rule are addressed above. The language of this provision remains the same as the proposed, but it is renumbered.

Paragraph (e) of the final rule, like the proposed rule, requires deenergization of high-voltage circuits contained in a compartment with low-or medium-voltage circuits, in order to troubleshoot or test the low-or medium-voltage circuits. Deenergizing, grounding, and locking out and tagging the high-voltage circuit provides protection against the danger of accidental contact with the high-voltage circuits while troubleshooting and testing low- and medium-voltage circuits. Some commenters suggested that high-voltage circuits should never be located in the same compartment with low- and medium-voltage circuits in order to prevent persons from contacting high-voltage circuits while testing or working on low- and medium-voltage circuits. In response to this comment, electrical closing of high-voltage contactors contained in motor-starter enclosures requires low-voltage magnetic components that are a part of the contactors. Therefore, sometimes it is necessary, to have both high voltage in

the form of a power circuit and low voltage in the form of a control circuit in the same compartment(s) of the motor-starter enclosures. In addition, compartments of motor-starter enclosures that house high-voltage disconnect switches may also contain low-and/or medium-voltage control and lighting transformers. The deenergization and lockout requirements under the new standard address the safety concerns associated with working near multiple voltage circuits. Therefore, the Agency concludes that paragraph (e) of this section should remain as proposed.

Paragraph (f) of the final rule requires that high-voltage cables located in conveyor belt entries be deenergized, guarded, or isolated by elevation prior to the installation or removal of the conveyor belt structure. The proposed rule required that the cables be deenergized prior to the removal of the structure. Other commenters suggested that the deenergization requirement should apply to the installation, as well as the removal, of conveyor belt structures. These commenters pointed out that the same type of work is performed during belt installation as during removal. The Agency agrees with these commenters and has concluded that the final rule should apply to advancing as well as retreating longwall systems. Therefore, the requirement has been changed to apply to installation as well as removal of conveyor belt structures. Contact with or damage to energized cables while installing or removing conveyor belt structures could cause risks of fire and electrocution to miners. The final rule addresses these dangers by requiring either deenergization, guarding, or proper location of the cables before installing or removing belt structures.

Commenters suggested that deenergizing the high-voltage cable for removal of the belt conveyor structure is often impractical and that an alternative would be to guard the cable from direct contact with the belt conveyor structure during removal. Reasons given for this alternative were: (1) Many of the routine jobs performed along the longwall face cannot be performed with the power off (such as repositioning of the longwall shearer, moving the shields electronically and moving the face conveyor, as well as equipment servicing and welding operations that typically contribute to the normal safe and efficient operation of the longwall) and (2) Methane monitors, face lighting, and on-board shield diagnostics would lose power if they receive electrical power through the high-voltage system that feeds the face equipment. In addition, the commenter pointed out that belt structure removal occurs 2 or 3 times a shift, taking 15 to 30 minutes each time. Other commenters suggested that this provision be deleted, since proper guarding is required by § 75.816. These commenters suggested that the requirement would result in deenergizing cables even if work is being done 10,000 feet from the cables. Another commenter suggested that this requirement should be waived if the high-voltage cable is installed on monorail because personnel are safely protected by the location of the cable.

Other reasons given for deleting the deenergization requirement were: (1) It would be less safe for miners, as it would result in deenergization of several longwall safety devices such as the face and equipment illumination system; (2) It would result in an undue burden for operators due to the time required to travel to and from the power center in order to deenergize the cable; (3) It would cause undue stress, wear and tear on electrical breakers, components, and cables due to frequent energizing and deenergizing; and (4) It would prevent most maintenance, service and support functions from being performed while the cables were deenergized. The commenter also pointed out that the occurrence of high-voltage cable faults is infrequent and the commenter has no experience of faults resulting in fire or causing shocks to miners. This commenter further stated that currently required circuit breakers and ground-fault systems provide adequate fault protection and that backup protection is provided by a ''Post Gulliver'' ground-fault system at the commenter's operation. Another commenter suggested that this requirement should only apply to cables which are not guarded and which are located in conveyor belt entries less than three feet away from the conveyor belt structure.

Another commenter suggested that the requirement should not apply where the mine operator can demonstrate that the seam height provides ample clearance of at least 6.5 feet or other methods are used to prevent any possible mechanical damage to high-voltage cables which may occur during removal of conveyor belt structures. Another commenter indicated that the phrasing of the proposed rule led the commenter to believe that MSHA was referring to the complete removal of the conveyor belt structure (as would be the case for an advancing longwall). This commenter indicated that operators are concerned about application of the rule to the more common retreating longwall situation where it is part of the routine work to frequently remove sections of conveyor structure. This commenter indicated that procedures have been developed to ensure that this work can be done without risk of high-voltage cables creating a hazard.

In response to these commenters, the Agency has changed the language of the proposed rule. The final rule allows guarding or protection by elevation as another means of protecting cables from damage and to minimize danger of contact with energized cables. Proper guarding of cables in accordance with § 75.816 or protection afforded by proper elevation would minimize miner contact with cables and minimize damage to the cables. The Agency agrees that there are safety advantages in leaving the high-voltage cable energized if the cable is properly protected during belt structure installation and removal. Examples of safety equipment that would remain energized are methane monitors and illumination systems.

Section 75.821 Testing, Examination, and Maintenance

Section 75.821 of the final rule requires that a person, qualified to perform electrical work, test and examine equipment and circuits to detect and correct conditions that could lead to an accident and injury. The section requires the qualified person to verify by signature and date that the tests and examinations have been completed. This record will include any unsafe conditions and corrective actions taken. The section further requires that the records be kept and made available for at least one year. This section was derived, in part, from existing §§ 75.512—*Electric equipment; examination, testing and maintenance,* 75.512–2—*Frequency of examinations,* 75.800–3—*Testing, examination and maintenance of circuit breakers; procedures,* and 75.800–4—*Testing, examination, and maintenance of circuit breakers; record* which generally apply to electrical equipment underground. This section applies to high-voltage equipment on the longwall face or within 150 feet of the pillar workings.

Paragraph (a) of § 75.821 requires that persons, qualified in accordance with existing § 75.153—*Electrical work; qualified person,* test and examine high-voltage longwall equipment and circuits to protect miners from electrical or operational hazardous that may exist. As noted under the § 75.820 discussion, based on the recent Federal Mine Safety and Health Review Commission *Black Mesa* decision (22 FMSHRC 708, 715; June 30, 2000), § 75.153 requires that a 'person qualified' be knowledgeable of

high-, medium-, and low-voltage circuits and equipment. Consistent with this decision and for clarification purposes, the language of paragraph (a) has been modified in the same fashion as in § 75.820(a) to conform with the ruling under this decision and the plain meaning of § 75.153. Thus, under this paragraph as revised, a person must be qualified under § 75.153 to perform electrical work on ''all'' circuits and equipment, not just high-voltage circuits. Testing and examining high-voltage longwall equipment and circuits allows qualified persons to determine that the electrical protection, equipment grounding, permissibility, cable insulation, and control devices are properly maintained to prevent fire, electric shock, ignition or operational hazards from existing on the equipment. Keeping equipment free from these hazards is assured by the training and expertise of qualified electricians. Regular testing and examination of high-voltage equipment used in face areas assures that hazardous conditions are discovered and corrected before they can cause injuries to miners. The standard requires examinations and tests of high-voltage longwall equipment at least once every 7 days.

Examinations and tests include activating the ground-fault test circuit which is required by § 75.814(c) of this final rule. The standard assures that problems which arise during normal use of mining equipment will be identified and corrected, so that miners are not exposed to hazards. Activating the ground-fault test circuit will identify any damage or defects in the ground-fault circuit and therefore protect miners from being exposed to energized longwall equipment frames.

A commenter stated that 30 CFR part 75 requires mine operators to conduct a multitude of tests in the underground environment. The commenter further stated that these tests are normally conducted on a ''daily,'' ''weekly,'' or ''monthly'' basis, and that the proposed rule is confusing and can present a problem for those operations working under nontraditional schedules. The commenter recommended that for clarity and consistency, the phrase ''once every 7 days'' be removed and the word ''weekly'' be substituted. In response to this comment, circuits and equipment used in conjunction with high-voltage longwalls are frequently being moved and subjected to heavy use, increasing the likelihood of wear and breakdown. Because of this, it is extremely important that defects in circuits and equipment be detected as quickly as possible and repaired before the occurrence of related accidents and injuries. The Agency considers it very important that the required examinations and tests be conducted as frequently as possible from the standpoint of safety and practicability, and that an examination at least once every seven days rather than weekly provides this assurance. A requirement for a weekly examination can result in the equipment not being examined for as long as 13–14 days. In addition, the seven-day requirement is consistent with similar type requirements contained in regulations promulgated by the Agency pertaining to ventilation under §§ 75.312(b)(1)(ii)—*Main mine fan examinations and records* and 75.364(a)—*Weekly examination.* Another commenter suggested that the proposed provision was too vague and in order to eliminate confusion, submitted the following examination requirements: (1) Actuate each ground-fault test circuit required by § 75.814(c); (2) Examine the cable guarding and handling system to ensure that they are properly installed and protecting the cables; (3) Determine that explosion-proof components are maintained in permissible condition; (4) Actuate the emergency stop button and verify that the corresponding circuit-interrupting device opens; and (5) Verify that the face communication system is operational. Another commenter suggested that the proposed examination requirements were so comprehensive that it would take a skilled person two days and that the more limited examination suggested by the previous commenter would cover the essential safety aspects.

In response to the comments regarding adoption of less time-consuming examination requirements, the complex high-voltage longwall mining system contains numerous cables, conductors, and pieces of equipment that require time-consuming examinations to assure safe operating conditions. Although proper circuit and equipment maintenance requires both visual and physical examinations, most examinations are visual. In addition, testing of circuits and equipment routinely includes activating available test switches to verify proper operation and causes the protective devices to open. High-voltage longwall equipment contains circuit protective devices that are mounted in heavily constructed explosion-proof enclosures containing large bolted covers and cables that are protected by heavily constructed guarding. The proposed rule required, in part, that a determination be made that protective devices, in some cases contained within these enclosures, and cables protected by the described guarding, be inspected to assure proper maintenance. The Agency believes that verification of proper maintenance regarding these items would not require, in all cases, removal of the equipment covers and cable guards in order to make this determination. Some protective device settings do not change, so frequent removal of covers to gain access for inspection serves no useful purpose and reduces safety if covers are not properly replaced. Removing and replacing guards that are installed to provide mechanical protection for cables, without good reason, could likewise result in an unsafe condition if not properly replaced.

Since 1970, Title 30 CFR has contained an examination, test, and maintenance requirement for electric equipment that is more basic than § 75.821. The Agency has been asked on several occasions to describe the required extent of proper examination of circuits and equipment. Since there are so many varieties of circuits and equipment in use in mines, it is impractical to describe a specific inspection procedure that applies to all circuits and equipment in all instances.

Consequently, a general type inspection procedure, such as that contained in this final rule, is necessary. The amount of detail needed for a given inspection is normally determined on a case-by-case basis, as the inspection takes place. For example, the testing of ground monitors would normally only require simple activation of readily available test switches; however, findings revealed during this portion of the inspection of the longwall circuits and equipment may indicate a need for more thorough examinations and tests. For example, if an ohm meter test determined that a condition existed in a cable, such as an inadvertent connection between a pilot wire and ground wire rendering a ground monitor inoperative, further examination and correction would be required to establish effective ground monitoring. For these reasons, the Agency concludes that the final rule require general type examinations and tests be conducted. Therefore, except for the change based on the *Black Mesa* decision, paragraph (a) of this section remains as proposed.

Paragraph (b) of the final rule, like the proposed rule, requires that each ground-wire monitor and corresponding circuit be examined and tested at least once each 30 days to verify that it is operating properly and will cause the corresponding circuit-interrupting device to open. This procedure assures that ground-wire monitors and corresponding circuit-interrupting

devices will operate properly to deenergize the circuits that they monitor. A commenter suggested that the requirement for testing of ground-wire monitors be relocated to another section of the rule, or possibly § 75.803—*Fail safe ground check circuits on high-voltage resistance grounded systems.* The Agency has determined that the important safety protection provided by these devices and their use on operating high-voltage longwall equipment necessitates placing ground monitor testing requirements in this section of the final rule. This is required in addition to other relevant testing requirements for other protective systems on high-voltage longwall equipment.

Another commenter suggested that the testing be limited to the operation of appropriate control circuit test devices in the power center or high-voltage motor-starter enclosure, and indicated that it should not be necessary to open any explosion-proof enclosure or to disconnect any ground wire while testing a ground-wire monitor. These commenters suggested that language be added to the provision that specifies the test be initiated by operating the test switch provided as part of the ground-wire monitor, or a similar switch installed in the power center or the high-voltage motor-starter enclosure. As stated above, proper examination and testing of ground-wire monitors and associated circuits, which include pilot wires and grounding conductors, may require more than simple activation of a test switch that normally opens the pilot wire. Therefore, paragraph (b) of this section remains as proposed.

Paragraph (c) of the final rule requires equipment to be immediately removed from service or immediately repaired when examinations or tests reveal a fire, electric shock, ignition, or operational hazard. This provision assures that equipment which may pose a danger to miners will not be used until the hazardous condition is corrected. Some commenters stated that the term ''immediately'' should be added to this provision. These commenters indicated that it is of utmost importance that whenever tests and examinations reveal malfunctions and defects, equipment must be repaired or removed from service immediately. They pointed out that operators may be reluctant to shut down a longwall operation to make necessary corrections and that confrontational situations and any misinterpretations could be avoided by adding this clarification to the standard.

The Agency agrees with the commenter and has added the word ''immediately'' to § 75.821(c) of the final rule. ''Immediately'' is intended to reflect its plain meaning that the required action be without hesitation or delay. It is emphasized, however, that the rule is referring to those safety defects that are considered hazardous, as stated under § 75.821(c). For example, some conditions, such as bare energized conductors in cables or conductors, present fire, electric shock, ignition, and possibly even operational hazards and require either immediate removal from service or immediate repair. However, conditions may exist that would not require immediate shutdown of equipment, but due to the nature of the condition, would permit continued operation of the equipment until material or parts necessary to correct the condition are procured, or would permit orderly shutdown of equipment prior to repair. For example, § 75.816 of this final rule requires guarding of high-voltage cables in specific locations. Unless there are other extenuating circumstances such as damaged cable or bare conductors present, a torn portion of guarding material would not be judged a condition that would have to be corrected immediately. It is the Agency's intent that once a condition with the potential to result in a fire, electric shock, ignition, or operational hazard is revealed correction of the condition should begin immediately. This includes arranging for orderly shutdown or removal of the equipment for repair until the necessary repair parts are obtained and installed.

Paragraph (d) of the final rule, like the proposed rule, requires the person who performs examinations and tests to certify by signature and date that they have been conducted. Also, a record is required for any unsafe condition found and any corrective action taken. This unsafe condition need not be an immediate hazard to be reported. In addition, certifications and records are required to be kept for at least one year and made available at the mine for inspection by authorized representatives of the Secretary and representatives of miners at the mine. Records and certifications of tests and repairs are valuable tools for mine operators and can be used to point out patterns of equipment defects and facilitate improvements in equipment maintenance and design. These records and certifications will assist in identifying that the required examinations were conducted, and will also assist in the investigation of accidents.

A commenter suggested that requiring the examiner's signature is not necessary and eliminates other responsible persons from entering the information as is currently allowed. This commenter pointed out that the results of the examination could be allowed to be entered by the examiner or by a responsible mine official, or information could be transferred from a checklist filled out by the examiner. In response to this commenter, high-voltage longwalls contain complex circuits and equipment that require examinations and tests be conducted only by qualified persons knowledgeable about equipment function and operation. These persons routinely acquire this knowledge through numerous hours of education, training, and experience. Once inspections, including required examinations and tests, of high-voltage longwalls are conducted by qualified persons, it can be concluded that these individuals are the only ones that have the necessary detailed knowledge and understanding of the results of the inspection. Because of this, it is appropriate that only these persons certify by signature and date that the required examinations and tests have been conducted and that unsafe conditions found have been corrected and recorded. This approach is consistent with other examination and recordkeeping requirements promulgated by MSHA.

Another commenter suggested that the operator maintain a written record of each test, examination, repair or adjustment of all circuit breakers protecting high-voltage circuits which enter any underground area of the coal mine and that such records be maintained in a book approved by the Secretary. These commenters indicated that such records are necessary to assure that tests and examinations have been made and would indicate which pieces of electrical equipment were tested and examined and which ones were not. They suggested that a reduction in the amount of recordkeeping diminishes the operator's accountability to provide proof that all equipment has been tested and examined. In response to this commenter, even though existing § 75.512 requires examination of all electric equipment, proposed §§ 75.814 through 75.822 are specific to high-voltage longwall circuits and equipment and not just high-voltage circuit breakers. Since proper test, examination, and maintenance of circuits and equipment is considered to be of extreme importance for the protection of personnel, the Agency concluded it was necessary to draft an examination and testing standard for high-voltage longwall circuits and

equipment. As stated above, the wording of § 75.821(d), which in part, requires that the person who completes the examination and tests certify by signature and date that they have been conducted. This approach is generally consistent with requirements in other regulations promulgated by the Agency. This certification and recording requirement only pertains to high-voltage longwall systems, including associated low- and medium-voltage circuits and equipment. The requirements of § 75.512 remain in effect for circuits and equipment in the mine other than that used on high-voltage longwall systems. Therefore, paragraph (d) of this section remains as proposed.

Section 75.822 Underground High-Voltage Longwall Cables

Section 75.822 of the final rule is new, derived in part from existing § 75.804—*Underground high-voltage cables.* It has been added since the proposed rule in specific response to commenters, and is a logical outgrowth of this high-voltage longwall rulemaking. This section differs from the requirements of § 75.804 by permitting the use of high-voltage cables that have an insulated center ground-check conductor that is smaller than a No. 10 AWG conductor. The Agency developed this new provision in response to industry requests and to accommodate new cable design technology that can either eliminate or significantly minimize inter-machine arcing due to the reduction of current induced into the ground-check conductor. This new cable design technology developed from MSHA and the industry's experience with using smaller ground-monitor conductor sizes in high-voltage longwall cables under MSHA granted modifications. This experience, together with comments from the high-voltage longwall rulemaking process, caused MSHA to conclude that such cable designs should be permitted under the final rule. The development of affordable smaller conductors resulted directly from the high-voltage longwall equipment design and use experience under granted modifications.

Two commenters suggested that a regulation be developed to permit the use of high-voltage cables that have a center ground-check conductor smaller than a No. 10 AWG conductor that is presently required under § 75.804(a). The commenters further stated that MSHA has allowed the use of a smaller ground-check conductor for high-voltage cables through the use of § 101(c) of the Mine Act for petitions for modification. One of these commenters stated that the use of a center ground-check conductor can either eliminate or significantly minimize inter-machine arcing and also provides improved ground-check monitor performance by reducing induced current into the ground-check conductor.

The Agency agrees with these comments, and includes a new section permitting this cable design use in light of its experience with high-voltage longwall petitions. As noted above, these new cable design provisions arise from technology developments referenced by commenters in response to the proposed rule and from the high-voltage longwall experience under the petition process. This section includes requirements from § 75.804 and allows the use of high-voltage longwall equipment cables that are designed with a center ground-check insulated conductor smaller than No. 10 AWG and metallic shields around each power conductor. Acceptable cables are those manufactured to meet nationally recognized consensus standards, such as the Insulated Cable Engineers Association (ICEA) standards and, as provided by the final rule, are designed with a stranded ground-check conductor that is no smaller than No. 16 AWG and is located in the center interstice of the cable conductors. The national consensus standards are developed by recognized experts in their fields. These cables, through the Mine Act § 101(c) petition for modification process, have been used on longwall mining equipment for the past several years and provide the necessary protection from physical damage or stress to the No. 16 AWG center ground-check conductor.

For these reasons, the Agency has determined that allowing the use of a No. 16 AWG center ground-check conductor can provide equivalent or improved protection as provided by a regular No. 10 AWG conductor. Improved protection is provided by the No. 16 AWG ground-check conductor because it is located in the center of the cable creating cable conductor symmetry. This greatly minimizes induced currents and voltages that have been found to occur when using cables where the ground-check conductors are located in the interstices between the phase conductors. These induced currents and voltages can result in arcing, fire or ignition hazards. Using cables with No. 10 AWG conductors has required the installation of external arc-suppression devices to prevent induced currents and voltages. Therefore, permitting cables with No. 16 AWG conductors located in the center of the cables, brings a safer, more efficient, and less burdensome ground-wire monitor system to the mining industry. This small ground-check conductor size is not a requirement but is offered to give added flexibility to mine operators and to minimize their cost burden where feasible. This option became available to the coal industry and coal mine equipment manufacturers as it was developed and used in high-voltage longwall systems under the petition for modification process during the last seven years.

With the advent of high-voltage longwall face equipment, the development and use of No. 16 AWG ground-check conductors for high-voltage longwall equipment became an affordable technology with additional safety benefits. This standard also eliminates the need for § 75.804(a) petitions for modification on longwalls for this purpose and facilitates the use of improved high-voltage cable designs. These cable designs should reduce the hazards associated with locating severed ground-check conductors, thereby discouraging the bypassing of ground-wire monitors when a cable has experienced a broken or severed ground-check conductor. Mines using this cable design have reported less downtime by having to locate and repair broken or severed ground-check conductors.

A commenter recommended that the word ''metallic'' not be used to describe the shielding that surrounds the individual power conductors and that the rule should allow the use of other materials to be incorporated in the construction of the shielding. The commenter did not specify what other types of materials should be used as shielding around the power conductors. Experience indicates that use of high-voltage cables with metallic shielding that surrounds the individual power conductors provides the intended protection against electrical hazards. Thus, the Agency has retained the cable design specifications that incorporate metallic shielding around each power conductor.

Section 75.1002 Installation of Electric Equipment and Conductors; Permissibility

This section of the final rule is derived from existing §§ 75.1002—*Location of trolley wires, trolley feeder wires, high-voltage cables and transformers* and 75.1002–1—*Location of other electric equipment; requirements for permissibility* and addresses requirements for conductors and cables used in or inby the last open crosscut, and electric equipment and conductors and cables used within 150

feet of pillar workings. The final rule revises existing § 75.1002 and removes § 75.1002–1, which prohibited the use of high-voltage cables inby the last open crosscut and within 150 feet of pillar workings or longwall faces. It also revises § 75.1002 related to the use of permissible equipment in these areas.

Paragraph (a) of the final rule, like the existing rule and proposed rule, continues to require that only permissible electric equipment be located within 150 feet of pillar workings or longwall faces. This equipment is specifically designed to protect miners against fire and explosion hazards in the mining face areas such as the longwall face where methane gas would likely accumulate and possibly cause an ignition or explosion.

Paragraph (b) of the final rule, like the existing rule and proposed rule, limits the types of electric conductors and cables permitted in areas where permissible equipment is required. This section prohibits the installation of conductors such as trolley wires and trolley feeder wires in areas where permissible equipment is required. Such electric conductors could provide a ready ignition source and therefore must not be used where permissible equipment is required. Permissible equipment is defined under 30 CFR § 18.2—*Definitions* and under § 318(i) of the Mine Act. Such equipment is specifically approved by MSHA for use in fire and explosive hazardous areas. However, the new final paragraph (b)(1), like the proposed rule, permits the use of shielded high-voltage longwall cable. Such shielding and design protect against arcing and other electrical ignition hazards that may occur when the outer jacket material of the cable is damaged. The use of shielded high-voltage cables supplying power to permissible longwall equipment reduces the risk of fire or explosion in face areas since these cables have equivalent or superior mechanical and electrical protective characteristics. This equipment offers other improved safety features, such as short-circuit and ground-fault protection against shock, fire, and explosion hazards. The final rule continues to prohibit the use of such nonpermissible equipment not specifically approved by MSHA for use near the actual coal extraction areas where increased fire and explosion hazards exist.

The high-voltage longwall final rule does not apply to high-voltage continuous miner use within 150 feet of pillar workings. High-voltage continuous miner petitions granted under existing § 75.1002 (§ 75.1002(b) under this final rule) will remain in effect, and mine operators who do not have granted petitions in effect must file a petition for modification of § 75.1002(b) for the future use of high-voltage continuous miners.

In addition, the high-voltage longwall final rule does not apply to nonpermissible test and diagnostic equipment use. Previously granted petitions under existing § 75.1002–1(a) (§ 75.1002(a) under this final rule) will remain in effect. After the effective date of this rule, mine operators who do not have granted petitions in effect must file a petition for modification for the use of nonpermissible test and diagnostic equipment under § 75.1002(a).

In response to a commenter's suggestion, MSHA has added the term ''longwall faces'' to paragraph (b) of the section. While longwall faces are generally considered to be part of a pillar working, the use of this term more specifically identifies the place where conductors and cables can be used. The addition of this term also maintains consistency with paragraph (a). This term was used in proposed paragraph (a) to clarify that longwall faces are included as part of the pillar working.

Paragraph (b)(1) of the final rule, like the proposed rule, permits the use of shielded high-voltage cables supplying power to permissible longwall equipment. Paragraphs (b)(2) through (b)(4) of the final rule, like the existing standards, permit the use of conductors and cables of intrinsically safe circuits, and cables and conductors supplying power to low- and medium-voltage permissible equipment in or inby the last open crosscut and within 150 feet of pillar workings or longwall faces.

Petitions for Modification

On the effective date of this final rule, all existing petitions for modification for high-voltage longwall use under § 75.1002 will be superseded. Operators are thereafter required to comply with the provisions of this final rule.

Derivation Table

The following derivation table lists: (1) Each section number of the final rule and (2) The section number of the standard from which the section is derived (existing section).

DERIVATION TABLE

Final rule	Existing section
75.2	Partly new.
75.813	N/A.
75.814(a)(1)	75.518–1 & 75.800.
75.814(a)(2)	N/A.
75.814(a)(3)	75.802.
75.814(a)(4)	75.800.

DERIVATION TABLE—Continued

Final rule	Existing section
75.814(a)(5) & (6)	N/A.
75.814(a)(7)	75.800.
75.814(b), (c) & (d)	N/A.
75.814(e)	New (75.518–1).
75.815(a) & (b)	75.808.
75.815(c)	75.520.
75.815(d)(1)	75.601 & 75.808.
75.815(d)(2)	75.705.
75.815(d)(3)	75.511.
75.815(e)	75.520.
75.816 & 75.817	75.807.
75.818(a)	75.705–6 and 75.812.
75.818(b)	75.705–7 & 75.705–8.
75.819	N/A.
75.820	75.153, 75.509, 75.511 & 75.705.
75.821	75.512, 75.512–1, 75.800–3 & 75.800–4.
75.822	N/A.
75.1002 (revised)	75.1002, 75.1002–1.

N/A: Not Applicable.

Distribution Table

The following distribution table lists: (1) Each section number of the existing standards and (2) The section number of the final rule which contains provisions derived from the corresponding existing section.

DISTRIBUTION TABLE

Existing section	Final rule
75.2	Partly new 75.2.
NA	75.813.
75.518–1 & 75.808	75.814(a)(1).
NA	75.814(a)(2).
75.802	75.814(a)(3).
75.800	75.814(a)(4).
NA	75.814(a)(5) & (6).
75.800	75.814(7).
NA	75.814(b), (c) & (d).
New (75.518–1)	75.814 (e).
75.808	75.815 (a) & (b).
75.520	75.815 (c).
75.601 & 75.808	75.815 (d)(1).
75.705	75.815 (d)(2).
75.511	75.815 (d)(3).
75.520	75.815 (e).
75.807	75.816 & 75.817.
75.705–6 & 75.812	75.818 (a).
75.705–7 & 75.705–8	75.818 (b).
NA	75.819.
75.153, 75.509, 75.511 75.705.	75.820.
75.512, 75.512–1, 75.800–3 & 75.800–4.	75.821.
NA	75.822.
75.1002 (Revised) & 75.1002–1 (Removed).	75.1002.

NA—Not Applicable.

III. Paperwork Reduction Act

The information collection requirements contained in this final rule

have been submitted to the Office of Management and Budget (OMB) for review under the Paperwork Reduction Act of 1995 (44 U.S.C. 3501–3520), as implemented by OMB in regulations at 5 CFR part 1320. The Paperwork Reduction Act of 1995 (PRA 95) defines collection of information as ''the obtaining, causing to be obtained, soliciting, or requiring the disclosure to third parties or the public of facts or opinions by or for an agency regardless of form or format.''

This rule contains information collection requirements for high-voltage longwall operators in § 18.53(h), § 75.820(b), § 75.820(e) and § 75.821(d). Annual paperwork burden hours and costs from these provisions are given in the following table. The total first year paperwork burden hours and costs of the rule are 5,736 hours and $163,929, respectively. The total burden hours and costs in each year thereafter will be 5,732 hours and $163,806, respectively.

Manufacturers seeking approval for longwall equipment continue to be required to submit applications for approval including related drawings, drawing lists, specifications, wiring diagrams, and descriptions. The paperwork burden for this application process is approved as part of a petition for modification, under OMB Control Number 1219–0065.

The information collection requirements contained in this rule for part 75 were submitted to OMB for review under the Paperwork Reduction Act of 1995 and were approved under OMB Control Number 1219–0116. This Control Number, however, expired in 1994, and the information requirements have been resubmitted to OMB for reinstatement. In accordance with § 1320.11(h) of the implementing regulations, OMB has 60 days from today's publication date in which to approve, disapprove, or instruct MSHA to make a change to the information collection requirements in this final rule.

TABLE OF ANNUAL BURDEN HOURS AND COSTS FROM THE RULE

	Annual burden Hours in first year	Annual burden hours for each year thereafter	Annual burden costs in first year	Annual burden costs for each year thereafter
Section 18.53(h)	7	3	$247	$124
Section 75.820(b) and (e)	1604	1604	45,831	45,831
Section 75.821(d)	4125	4125	117,851	117,851
Total	5736	5732	163,929	163,806

IV. Executive Order 12866 and Regulatory Flexibility Act

Executive Order 12866 requires that regulatory agencies assess both the costs and benefits of regulations. MSHA has determined that this final rule will not have an annual effect of $100 million or more on the economy and that, therefore, they are not an economically significant regulatory action pursuant to § 3(f)(1) of Executive Order (E.O.) 12866. However, we have determined that this final rule is significant under § 3(f)(4) of E.O. 12866, which defines a significant regulatory action as one that may ''* * * raise novel legal or policy issues arising out of legal mandates, the President's priorities, or the principles set forth in the Executive Order.'' MSHA completed a Regulatory Economic Analysis (REA) in which the economic impact of the rule is estimated. The REA is available from MSHA and is summarized as follows.

Population-at-Risk

MSHA estimates that this rulemaking would initially affect approximately 14,229 miners at 43 underground coal mines and six mines employing about 1,667 miners that would begin using high-voltage longwall equipment in the first year of the rule. The rule would not increase costs to small mines, which MSHA has traditionally defined as having fewer than 20 employees, because such mines do not use longwall equipment.

Benefits

The more stringent criteria and design features associated with high-voltage systems, such as compartment covers that are interlocked to prevent access to energized high-voltage conductors and equipment designed to facilitate safe testing procedures, decrease the likelihood of electrical accidents. In addition, high-voltage cables are required to be shielded around each conductor (SHD type) whereas medium-voltage cables can be shielded around the circumference of the cable (SHC type). The SHD cables are safer than the SHC cables because shielding the individual power conductors reduces the possibility of a short circuit that can cause a fire, or a shock and burn hazard when a miner touches a cable. The SHD shielding reduces the possibility of a shock hazard because an exposed energized conductor will contact the SHD shielding and activate the ground-fault protection, which removes power to the cable. The use of high-voltage SHD cables reduces the chances of cable damage which, in turn, reduces the chances of a miner coming into contact with an energized conductor(s).

Further, the use of high voltage in longwall mining operations may reduce the number of power cables running between various pieces of longwall equipment. In certain situations, the cables may also be smaller, for example, 5,000-volt (high-voltage) power cables are smaller and weigh less than 1,000-volt (medium-voltage) power cables. As a result of fewer and lighter power cables, the risk of injuries from handling power cables during longwall installation, movement, or replacement may be reduced.

Increased productivity gains can be realized when using high voltage rather than medium voltage. In cases where medium voltage is used to power larger motors and heavier duty longwall equipment, current (amperes) can increase, causing motors and/or cables to overheat. However, if high voltage rather than medium voltage is used to power the larger motors and heavier duty longwall equipment, current (amperes) is reduced, and the risk of overheating motors and/or cables diminishes. Also, motor start-up is easier when using high voltage. This increased reliability may reduce the amount of longwall equipment downtime, thereby enhancing coal productivity.

Section 75.818(b)(1) and (2) requires that high-voltage insulated gloves, sleeves, and other insulated personal protective equipment be rated as Class 1 or higher, be visibly examined before each use for signs of damage, and that such protective equipment be removed

from the underground area of the mine when damaged or defective.

Section 75.818(b)(3) requires that insulated personal protective equipment be electrically tested every six months.

Section 75.820(d)(3) requires qualified electricians to wear properly rated rubber gloves in order to perform troubleshooting and testing on low- and medium-voltage circuits in a high-voltage compartment. Currently, petitions for modification do not have this requirement. Thus, § 75.820(d)(3) provides additional safety protection during this troubleshooting and testing.

Finally, the rule continues the same electrical safety requirements developed in the petitions for modification to use high-voltage longwalls.

Compliance Costs

This rule will result in yearly net savings of $23,083,980. This includes a savings per conversion of $6,753,851 attributed to each medium-voltage longwall unit that converts to high-voltage usage. These conversion savings consist of $6,733,280 for accelerated production savings per unit, and $20,571 for filed petition savings per unit.

The net economic effect of the rule includes substantially increased productivity and cost savings for each longwall unit that converts to high-voltage equipment and cables, and a small cost annually for each longwall unit that uses high-voltage equipment and cables. Accelerated production savings are savings due to the more productive high-voltage equipment being used sooner rather than later. Filed petition savings refer to savings due to eliminating legal fees and expenses connected with a filed petition. The elimination of the need to file petitions for modification to use high-voltage longwalls will reduce the costs associated with the petition process and will require less paperwork.

MSHA estimates that the petition process would have imposed costs for legal fees and expenses of about $5,250 for an unopposed petition filing and $112,500 for an opposed petition requiring litigation, including proceedings before Administrative Law Judges, the Assistant Secretary, and courts of appeal. Since 14.3 percent (1 out of 7) of all petitions granted by MSHA in 1998 were contested and required an ALJ's decision, MSHA assumes this same percentage would be contested were future petitions to be filed. Thus, elimination of the petition process would generate a one-time filed petition savings per high-voltage longwall unit of $20,571.

In addition, eliminating the petition process would produce further savings for medium-voltage longwall units that convert to high-voltage units. The rule would eliminate delayed production that could occur as a result of a mine not being able to synchronize initial start-up of its high-voltage longwall equipment with the granting of a petition. The medium-voltage longwall units that convert would have the opportunity to obtain higher productivity yields from the use of high voltage sooner under the rule than under current procedures. Based on an average 66.1 percent increased productivity of high-voltage longwalls over lower-voltage longwalls and an average delayed production time of 78 working days, MSHA estimates that the one-time conversion accelerated production savings due to the petition process would be about $6,733,280 per high-voltage longwall unit.

With respect to individual provisions concerning the 43 existing mines that currently use high-voltage equipment and the medium-voltage longwall units that would shift to high voltage, § 75.818(b)(4) would require mines to perform an electrical test of personal protective equipment every six months. Section 75.820(d)(3) would require electricians to wear properly-rated rubber gloves to perform troubleshooting and testing on low- and medium-voltage circuits that are contained in a compartment with high-voltage circuits. Compliance cost increases of $90 per longwall unit and $168 per longwall unit are identified with §§ 75.818(b)(4) and 75.820(d)(3), respectively.

Economic Impact

The rule enhances productivity in those affected mines because it allows more efficient high-voltage longwall equipment to be established more rapidly in the relatively few underground coal mines in which it can be profitably employed. MSHA has concluded that the rule will have only a small (but favorable) effect on coal output, price, and profitability.

Feasibility

MSHA has concluded that the requirements of the final rule are both technologically and economically feasible.

This final rule is not a technology-forcing standard and does not involve activities on the frontiers of scientific knowledge. The equipment testing, recordkeeping, and rubber glove requirements all involve standard procedures or simple, off-the-shelf technologies. Other provisions of the final rule will reduce recordkeeping and petition requirements.

The final rule is clearly economically feasible insofar as it provides a yearly net *savings* of $23.08 million to high-voltage longwall mines. This includes a one-time savings of $6.75 million for each longwall mine that converts to high voltage as well as annual costs of $258 for each high-voltage longwall mine.

Regulatory Flexibility Act and Small Business Regulatory Enforcement Fairness Act (SBREFA)

The Regulatory Flexibility Act (RFA) requires regulatory agencies to consider a rule's impact on small entities. For the purposes of the RFA and this certification, MSHA has analyzed the impact of the final rule and has determined that there will be a cost savings to small entities affected by this rule.

MSHA will mail a copy of the final rule, including the preamble and regulatory flexibility certification statement, to all underground coal mine operators and miners' representatives. The final rule will also be placed on MSHA's Internet Homepage at *http://www.msha.gov,* under Statutory and Regulatory Information.

In accordance with § 605 of the RFA, MSHA certifies that this final rule will not have a significant adverse economic impact on a substantial number of small entities. No small governmental jurisdictions or nonprofit organizations are affected.

Under the Small Business Regulatory Enforcement Fairness Act amendments to the RFA, MSHA must include in the final rule a factual basis for this certification. The Agency also must publish the regulatory flexibility certification in the **Federal Register**, along with its factual basis.

Factual Basis for Certification

The Agency compared the gross costs of the rule for small mines in each sector to the revenue for that sector for both size categories analyzed (MSHA and Small Business Administration 'small entity' definitions). Given that the gross compliance costs for small mines is substantially less than 1 percent of revenue and that net costs are negative, MSHA concludes that there is no significant cost impact of the rule on small entities that use high-voltage longwall units.

Other small entities potentially affected by the rule are small manufacturers of high-voltage longwall equipment. MSHA concludes that the rule would not have a significant impact upon a substantial number of small

manufacturers of high-voltage longwall equipment.

MSHA also has determined that there are no initial net compliance costs as a result of this rule. The final rule results in a net savings. Currently mine operators are required to file a petition for modification to use high-voltage longwall equipment. This is a costly and lengthy administrative process. This final rule increases safety, effectiveness, and efficiency in the use of high-voltage longwall equipment. The lengthy approval process will be eliminated. The Agency estimates that six existing longwall mines will convert to high voltage and an additional three new longwall mines each year will elect to adopt high-voltage technology in the future.

Unfunded Mandates Reform Act of 1995

For purposes of the Unfunded Mandates Reform Act of 1995, as well as E.O. 12875, this rule does not include any Federal mandate that may result in increased expenditures by State, local, and tribal governments, or increased expenditures by the private sector of more than $100 million. MSHA is not aware of any State, local, or tribal government that either owns or operates underground coal mines.

Executive Order 13132

MSHA has reviewed this rule in accordance with Executive Order 13132 regarding federalism, and has determined that it does not have ''federalism implications.'' The rule does not ''have substantial direct effects on the States, on the relationship between the national government and the States, or on the distribution of power and responsibilities among the various levels of government.'' There are no underground coal mines or manufacturers of high-voltage longwall equipment owned or operated by any State governments.

Executive Order 13045

In accordance with Executive Order 13045, MSHA has evaluated the environmental health and safety effect of the final rule on children. The Agency has determined that the final rule will have no effect on children.

Executive Order 13084

In accordance with Executive Order 13084, MSHA certifies that the high-voltage longwall final rule does not impose substantial direct compliance costs on Indian tribal governments. MSHA is not aware of any Indian tribal governments which either own or operate underground coal mines or manufacturers high-voltage longwall equipment.

Executive Order 12630

This rule is not subject to Executive Order 12630, Governmental Actions and Interference with Constitutionally Protected Property Rights, because it does not involve implementation of a policy with takings implications.

Executive Order 12988

This regulation has been drafted and reviewed in accordance with Executive Order 12988, Civil Justice Reform, and will not unduly burden the Federal court system. The regulation has been written so as to minimize litigation and provide a clear legal standard for affected conduct, and has been reviewed carefully to eliminate drafting errors and ambiguities.

Executive Order 13211 (Energy)

In accordance with Executive Order 13211, MSHA has reviewed this final rule for its energy impacts. We have determined that the Executive Order does not apply to this final rule for the following reasons. One, this rulemaking is not considered a ''significant regulatory action'' under Executive Order 12866 and therefore the action does not meet the criteria listed in Executive Order 13211 requiring a Statement of Energy Effects. Two, the proposed rule was published before the effective date of the Executive Order. Three, MSHA has determined that this final rule will not have any adverse effects on energy supply, distribution, or use. To the contrary, as summarized in the economic analysis, MSHA expects accelerated coal production because of the implementation of this final rule. Therefore, no reasonable alternatives to this action are necessary.

List of Subjects

30 CFR Part 18

Approval regulations, Electric motor-driven mine equipment and accessories, Mine safety and health.

30 CFR Part 75

High-voltage longwall, Incorporation by reference, Mandatory safety standards, Mine safety and health, Underground coal mines.

Dated: February 25, 2002.

Dave D. Lauriski,

Assistant Secretary of Labor for Mine Safety and Health.

For the reasons set out in the preamble, chapter I of title 30 of the Code of Federal Regulations is amended as follows:

PART 18—ELECTRIC MOTOR-DRIVEN MINE EQUIPMENT AND ACCESSORIES

1. The authority citation for part 18 continues to read as follows:

Authority: 30 U.S.C. 957, 961.

2. Add § 18.53 to subpart B of part 18 to read as follows:

§ 18.53 High-voltage longwall mining systems.

(a) In each high-voltage motor-starter enclosure, with the exception of a controller on a high-voltage shearer, the disconnect device compartment, control/communications compartment, and motor contactor compartment must be separated by barriers or partitions to prevent exposure of personnel to energized high-voltage conductors or parts. In each motor-starter enclosure on a high-voltage shearer, the high-voltage components must be separated from lower voltage components by barriers or partitions to prevent exposure of personnel to energized high-voltage conductors or parts. Barriers or partitions must be constructed of grounded metal or nonconductive insulating board.

(b) Each cover of a compartment in the high-voltage motor-starter enclosure containing high-voltage components must be equipped with at least two interlock switches arranged to automatically deenergize the high-voltage components within that compartment when the cover is removed.

(c) Circuit-interrupting devices must be designed and installed to prevent automatic reclosure.

(d) Transformers with high-voltage primary windings that supply control voltages must incorporate grounded electrostatic (Faraday) shielding between the primary and secondary windings. The shielding must be connected to equipment ground by a minimum No. 12 AWG grounding conductor. The secondary nominal voltage must not exceed 120 volts, line to line.

(e) Test circuits must be provided for checking the condition of ground-wire monitors and ground-fault protection without exposing personnel to energized circuits. Each ground-test circuit must inject a primary current of 50 percent or less of the current rating of the grounding resistor through the current transformer and cause each corresponding circuit-interrupting device to open.

(f) Each motor-starter enclosure, with the exception of a controller on a high-voltage shearer, must be equipped with

a disconnect device installed to deenergize all high-voltage power conductors extending from the enclosure when the device is in the ''open'' position.

(1) When multiple disconnect devices located in the same enclosure are used to satisfy the above requirement they must be mechanically connected to provide simultaneous operation by one handle.

(2) The disconnect device must be rated for the maximum phase-to-phase voltage and the full-load current of the circuit in which it is located, and installed so that—

(i) Visual observation determines that the contacts are open without removing any cover;

(ii) The load-side power conductors are grounded when the device is in the ''open'' position;

(iii) The device can be locked in the ''open'' position;

(iv) When located in an explosion-proof enclosure, the device must be designed and installed to cause the current to be interrupted automatically prior to the opening of the contacts; and

(v) When located in a non-explosion-proof enclosure, the device must be designed and installed to cause the current to be interrupted automatically prior to the opening of the contacts, or the device must be capable of interrupting the full-load current of the circuit.

(g) Control circuits for the high-voltage motor starters must be interlocked with the disconnect device so that—

(1) The control circuit can be operated with an auxiliary switch in the ''test'' position only when the disconnect device is in the open and grounded position; and

(2) The control circuit can be operated with the auxiliary switch in the ''normal'' position only when the disconnect switch is in the closed position.

(h) A study to determine the minimum available fault current must be submitted to MSHA to ensure adequate protection for the length and conductor size of the longwall motor, shearer and trailing cables.

(i) Longwall motor and shearer cables with nominal voltages greater than 660 volts must be made of a shielded construction with a grounded metallic shield around each power conductor.

(j) High-voltage motor and shearer circuits must be provided with instantaneous ground-fault protection of not more than 0.125-amperes. Current transformers used for this protection must be of the single-window type and must be installed to encircle all three phase conductors.

(k) Safeguards against corona must be provided on all 4,160 voltage circuits in explosion-proof enclosures.

(l) The maximum pressure rise within an explosion-proof enclosure containing high-voltage switchgear must be limited to 0.83 times the design pressure.

(m) High-voltage electrical components located in high-voltage explosion-proof enclosures must not be coplanar with a single plane flame-arresting path.

(n) Rigid insulation between high-voltage terminals (Phase-to-Phase or Phase-to-Ground) must be designed with creepage distances in accordance with the following table:

MINIMUM CREEPAGE DISTANCES

Phase to phase voltage	Points of measure	Minimum creepage distances (inches) for comparative tracking index (CTI) range [1]			
		CTI≥500	380≤CTI<500	175≤CTI<380	CTI<175
2,400	Ø–Ø	1.50	1.95	2.40	2.90
	Ø–G	1.00	1.25	1.55	1.85
4,160	Ø–Ø	2.40	3.15	3.90	4.65
	Ø–G	1.50	1.95	2.40	2.90

[1] Assumes that all insulation is rated for the applied voltage or higher.

(o) Explosion-proof motor-starter enclosures must be designed to establish the minimum free distance (MFD) between the wall or cover of the enclosure and uninsulated electrical conductors inside the enclosure in accordance with the following table:

HIGH-VOLTAGE MINIMUM FREE DISTANCES (MFD)

Wall/cover thickness (in)	Steel MFD (in)			Aluminum MFD (in)		
	A [1]	B [2]	C [3]	A	B	C
¼	2.8	4.3	5.8	[4] NA	[4] NA	[4] NA
⅜	1.8	2.3	3.9	8.6	12.8	18.1
½	*1.2	2.0	2.7	6.5	9.8	13.0
⅝	*0.9	1.5	2.1	5.1	7.7	10.4
¾	*0.6	*1.1	1.6	4.1	6.3	8.6
1	(*)	*0.6	*1.0	2.9	4.5	6.2

Note *: The minimum electrical clearances must still be maintained.

[1] Column A specifies the MFD for enclosures that have available 3-phase bolted short-circuit currents of 10,000 amperes rms or less.

[2] Column B specifies the MFD for enclosures that have a maximum available 3-phase bolted short-circuit currents greater than 10,000 and less than or equal to 15,000 amperes rms.

[3] Column C specifies the MFD for enclosures that have a maximum available 3-phase bolted short-circuit currents greater than 15,000 and less than or equal to 20,000 amperes rms.

[4] Not Applicable—MSHA doesn't allow aluminum wall or covers to be ¼ inch or less in thickness (Section 18.31).

(1) For values not included in the table, the following formulas on which the table is based may be used to determine the minimum free distance.

(i) Steel Wall/Cover:

$$MFD = 2.296 \times 10^{-6} \frac{(35 + 105\ (C)\ (I_{sc})\ (t))}{(C)(d)} - \frac{d}{2}$$

(ii) Aluminum Wall/Cover:

$$MFD = 1.032 \times 10^{-5} \frac{(35 + 105\ (C)\ (I_{sc})\ (t))}{(C)(d)} - \frac{d}{2}$$

Where C is 1.4 for 2,400 volt systems or 3.0 for 4,160 volt systems, I_{sc} is the 3-phase short circuit current in amperes of the system, t is the clearing time in seconds of the outby circuit-interrupting device and d is the thickness in inches of the metal wall/cover adjacent to an area of potential arcing.

(2) The minimum free distance must be increased by 1.5 inches for 4,160 volt systems and 0.7 inches for 2,400 volt systems when the adjacent wall area is the top of the enclosure. If a steel shield is mounted in conjunction with an aluminum wall or cover, the thickness of the steel shield is used to determine the minimum free distances.

(p) The following static pressure test must be performed on each prototype design of explosion-proof enclosures containing high-voltage switchgear prior to the explosion tests. The static pressure test must also be performed on every explosion-proof enclosure containing high-voltage switchgear, at the time of manufacture, unless the manufacturer uses an MSHA accepted quality assurance procedure covering inspection of the enclosure. Procedures must include a detailed check of parts against the drawings to determine that the parts and the drawings coincide and that the minimum requirements stated in part 18 have been followed with respect to materials, dimensions, configuration and workmanship.

(1) *Test procedure.* (i) The enclosure must be internally pressurized to at least the design pressure, maintaining the pressure for a minimum of 10 seconds.

(ii) Following the pressure hold, the pressure must be removed and the pressurizing agent removed from the enclosure.

(2) *Acceptable performance.* (i) The enclosure during pressurization must not exhibit—

(A) Leakage through welds or casting; or

(B) Rupture of any part that affects the explosion-proof integrity of the enclosure.

(ii) The enclosure following removal of the pressurizing agents must not exhibit—

(A) Visible cracks in welds;

(B) Permanent deformation exceeding 0.040 inches per linear foot; or

(C) Excessive clearances along flame-arresting paths following retightening of fastenings, as necessary.

PART 75—MANDATORY SAFETY STANDARDS—UNDERGROUND COAL MINES

3. The authority citation for part 75 continues to read as follows:

Authority: 30 U.S.C. 811.

4. Amend § 75.2 by adding the following definitions:

§ 75.2 Definitions.

* * * * *

Adequate interrupting capacity. The ability of an electrical protective device, based upon its required and intended application, to safely interrupt values of current in excess of its trip setting or melting point.

* * * * *

Approval documentation. Formal papers issued by the Mine Safety and Health Administration which describe and illustrate the complete assembly of electrical machinery or accessories which have met the applicable requirements of 30 CFR part 18.

* * * * *

Circuit-interrupting device. A device designed to open and close a circuit by nonautomatic means and to open the circuit automatically at a predetermined overcurrent value without damage to the device when operated within its rating.

* * * * *

Ground fault or grounded phase. An unintentional connection between an electric circuit and the grounding system.

Motor-starter enclosure. An enclosure containing motor starting circuits and equipment.

Nominal voltage. The phase-to-phase or line-to-line root-mean-square value assigned to a circuit or system for designation of its voltage class, such as 480 or 4,160 volts. Actual voltage at which the circuit or system operates may vary from the nominal voltage within a range that permits satisfactory operation of equipment.

* * * * *

Short circuit. An abnormal connection of relatively low impedance, whether made accidentally or intentionally, between two points of different potential.

* * * * *

5. Part 75, Subpart I, Underground High-Voltage Distribution, is amended by adding §§ 75.813 through 75.822 and Appendix A under a new undesignated center heading, high-voltage longwalls, to read as follows:

Sec.

High-Voltage Longwalls

75.813 High-voltage longwalls; scope.
75.814 Electrical protection.
75.815 Disconnect devices.
75.816 Guarding of cables.
75.817 Cable handling and support systems.
75.818 Use of insulated cable handling equipment.
75.819 Motor-starter enclosures; barriers and interlocks.
75.820 Electrical work; troubleshooting and testing.
75.821 Testing, examination and maintenance.
75.822 Underground high-voltage longwall cables.
Appendix A to Subpart I—Diagrams of Inby and Outby Switching

* * * * *

High-Voltage Longwalls

§ 75.813 High-voltage longwalls; scope.

Sections 75.814 through 75.822 of this part are electrical safety standards that apply to high-voltage longwall circuits and equipment. All other existing standards in 30 CFR must also apply to these longwall circuits and equipment where appropriate.

§ 75.814 Electrical protection.

(a) High-voltage circuits must be protected against short circuits, overloads, ground faults, and undervoltages by circuit-interrupting devices of adequate interrupting capacity as follows:

(1) Current settings of short-circuit protective devices must not exceed the setting specified in approval documentation, or seventy-five percent of the minimum available phase-to-phase short-circuit current, whichever is less.

(2) Time-delay settings of short-circuit protective devices used to protect any cable extending from the section power center to a motor-starter enclosure must not exceed the settings specified in approval documentation, or 0.25-second, whichever is less. Time delay settings of short-circuit protective devices used to protect motor and shearer circuits must not exceed the settings specified in approval documentation, or 3 cycles, whichever is less.

(3) Ground-fault currents must be limited by a neutral grounding resistor to not more than—

(i) 6.5 amperes when the nominal voltage of the power circuit is 2,400 volts or less; or

(ii) 3.75 amperes when the nominal voltage of the power circuit exceeds 2,400 volts.

(4) High-voltage circuits extending from the section power center must be provided with—

(i) Ground-fault protection set to cause deenergization at not more than 40 percent of the current rating of the neutral grounding resistor;

(ii) A backup ground-fault detection device to cause deenergization when a ground fault occurs with the neutral grounding resistor open; and

(iii) Thermal protection for the grounding resistor that will deenergize the longwall power center if the resistor is subjected to a sustained ground fault. The thermal protection must operate at either 50 percent of the maximum temperature rise of the grounding resistor, or 150° C (302° F), whichever is less, and must open the ground-wire monitor circuit for the high-voltage circuit supplying the section power center. The thermal protection must not be dependent upon control power and may consist of a current transformer and overcurrent relay.

(5) High-voltage motor and shearer circuits must be provided with instantaneous ground-fault protection set at not more than 0.125-ampere.

(6) Time-delay settings of ground-fault protective devices used to provide coordination with the instantaneous ground-fault protection of motor and shearer circuits must not exceed 0.25-second.

(7) Undervoltage protection must be provided by a device which operates on loss of voltage to cause and maintain the interruption of power to a circuit to prevent automatic restarting of the equipment.

(b) Current transformers used for the ground-fault protection specified in paragraphs (a)(4)(i) and (5) of this section must be single window-type and must be installed to encircle all three phase conductors. Equipment safety grounding conductors must not pass through or be connected in series with ground-fault current transformers.

(c) Each ground-fault current device specified in paragraphs (a)(4)(i) and (5) of this section must be provided with a test circuit that will inject a primary current of 50 percent or less of the current rating of the grounding resistor through the current transformer and cause each corresponding circuit-interrupting device to open.

(d) Circuit-interrupting devices must not reclose automatically.

(e) Where two or more high-voltage cables are used to supply power to a common bus in a high-voltage enclosure, each cable must be provided with ground-wire monitoring. The ground-wire monitoring circuits must cause deenergization of each cable when either the ground-monitor or grounding conductor(s) of any cable become severed or open. On or after May 10, 2002, parallel connected cables on newly installed longwalls must be protected as follows:

(1) When one circuit-interrupting device is used to protect parallel connected cables, the circuit-interrupting device must be electrically interlocked with the cables so that the device will open when any cable is disconnected; or

(2) When two or more parallel circuit-interrupting devices are used to protect parallel connected cables, the circuit-interrupting devices must be mechanically and electrically interlocked. Mechanical interlocking must cause all devices to open simultaneously and electrical interlocking must cause all devices to open when any cable is disconnected.

§ 75.815 Disconnect devices.

(a) The section power center must be equipped with a main disconnecting device installed to deenergize all cables extending to longwall equipment when the device is in the ''open'' position. See Figures I–1 and I–2 in Appendix A to this subpart I.

(b) Disconnecting devices for motor-starter enclosures must be maintained in accordance with the approval requirements of paragraph (f) of § 18.53 of part 18 of this chapter. The compartment for the disconnect device must be provided with a caution label to warn miners against entering the compartment before deenergizing the incoming high-voltage circuits to the compartment.

(c) Disconnecting devices must be rated for the maximum phase-to-phase voltage of the circuit in which they are installed, and for the full-load current of the circuit that is supplied power through the device.

(d) Each disconnecting device must be designed and installed so that —

(1) Visual observation determines that the contacts are open without removing any cover;

(2) All load power conductors can be grounded when the device is in the ''open'' position; and

(3) The device can be locked in the ''open'' position.

(e) Disconnecting devices, except those installed in explosion-proof enclosures, must be capable of interrupting the full-load current of the circuit or designed and installed to cause the current to be interrupted automatically prior to the opening of the contacts of the device. Disconnecting devices installed in explosion-proof enclosures must be maintained in accordance with the approval requirements of paragraph (f)(2)(iv) of § 18.53 of part 18 of this chapter.

§ 75.816 Guarding of cables.

(a) High-voltage cables must be guarded at the following locations:

(1) Where persons regularly work or travel over or under the cables.

(2) Where the cables leave cable handling or support systems to extend to electric components.

(b) Guarding must minimize the possibility of miners contacting the cables and protect the cables from damage. The guarding must be made of grounded metal or nonconductive flame-resistant material.

§ 75.817 Cable handling and support systems.

Longwall mining equipment must be provided with cable-handling and support systems that are constructed, installed and maintained to minimize the possibility of miners contacting the cables and to protect the high-voltage cables from damage.

§ 75.818 Use of insulated cable handling equipment.

(a) Energized high-voltage cables must not be handled except when motor or shearer cables need to be trained. When cables need to be trained, high-voltage insulated gloves, mitts, hooks, tongs, slings, aprons, or other personal protective equipment capable of providing protection against shock hazard must be used to prevent direct contact with the cable.

(b) High-voltage insulated gloves, sleeves, and other insulated personal protective equipment must—

(1) Have a voltage rating of at least Class 1 (7,500 volts) that meets or

exceeds ASTM F496–97, ''Standard Specification for In-Service Care of Insulating Gloves and Sleeves'' (1997).

(2) Be examined before each use for visible signs of damage;

(3) Be removed from the underground area of the mine or destroyed when damaged or defective; and

(4) Be electrically tested every 6 months in accordance with publication ASTM F496–97. ASTM F496–97 (Standard Specification for In-Service Care of Insulating Gloves and Sleeves, 1997) is incorporated by reference and may be inspected at any Coal Mine Health and Safety District and Subdistrict Office, or at MSHA's Office of Standards, 4015 Wilson Boulevard, Arlington, VA., and at the Office of the Federal Register, 800 North Capitol Street, NW., Suite 700, Washington, DC. In addition, copies of the document can be purchased from the American Society for Testing and Materials, 100 Barr Harbor Drive, West Conshohocken, Pennsylvania 19428–2959. This incorporation by reference was approved by the Director of the Federal Register in accordance with 5 U.S.C. 552(a) and 1 CFR part 51.

§ 75.819 Motor-starter enclosures; barriers and interlocks.

Compartment separation and cover interlock switches for motor-starter enclosures must be maintained in accordance with the approval requirements of paragraphs (a) and (b) of § 18.53 of part 18 of this chapter.

§ 75.820 Electrical work; troubleshooting and testing.

(a) Electrical work on all circuits and equipment associated with high-voltage longwalls must be performed only by persons qualified under § 75.153 to perform electrical work on all circuits and equipment.

(b) Prior to performing electrical work, except for troubleshooting and testing of energized circuits and equipment as provided for in paragraph (d) of this section, a qualified person must do the following:

(1) Deenergize the circuit or equipment with a circuit-interrupting device.

(2) Open the circuit disconnecting device. On high-voltage circuits, ground the power conductors until work on the circuit is completed.

(3) Lock out the disconnecting device with a padlock. When more than one qualified person is performing work, each person must install an individual padlock.

(4) Tag the disconnecting device to identify each person working and the circuit or equipment on which work is being performed.

(c) Each padlock and tag must be removed only by the person who installed them, except that, if that person is unavailable at the mine, the lock and tag may be removed by a person authorized by the operator, provided—

(1) The authorized person is qualified under paragraph (a) of this section; and

(2) The operator ensures that the person who installed the lock and tag is aware of the removal before that person resumes work on the affected circuit or equipment.

(d) Troubleshooting and testing of energized circuits must be performed only—

(1) On low- and medium-voltage circuits;

(2) When the purpose of troubleshooting and testing is to determine voltages and currents; and

(3) By persons qualified to perform electrical work and who wear protective gloves on circuits that exceed 40 volts in accordance with the following table:

Circuit voltage	Type of glove required
Greater than 120 volts (nominal) (not intrinsically safe)	Rubber insulating gloves with leather protectors.
40 volts to 120 volts (nominal) (both intrinsically safe and non-intrinsically safe)	Either rubber insulating gloves with leather protectors or dry work gloves.
Greater than 120 volts (nominal) (intrinsically safe)	Either rubber insulating gloves with leather protectors or dry work gloves.

(4) Rubber insulating gloves must be rated at least for the nominal voltage of the circuit when the voltage of the circuit exceeds 120 volts nominal and is not intrinsically safe.

(e) Before troubleshooting and testing a low- or medium-voltage circuit contained in a compartment with a high-voltage circuit, the high-voltage circuit must be deenergized, disconnected, grounded, locked out and tagged in accordance with paragraph (b) of this section.

(f) Prior to the installation or removal of conveyor belt structure, high-voltage cables extending from the section power center to longwall equipment and located in the belt entries must be:

(1) Deenergized; or

(2) Guarded in accordance with § 75.816 of this part, at the location where the belt structure is being installed or removed; or

(3) Located at least 6.5 feet above the mine floor.

§ 75.821 Testing, examination and maintenance.

(a) At least once every 7 days, a person qualified in accordance with § 75.153 to perform electrical work on all circuits and equipment must test and examine each unit of high-voltage longwall equipment and circuits to determine that electrical protection, equipment grounding, permissibility, cable insulation, and control devices are being properly maintained to prevent fire, electrical shock, ignition, or operational hazards from existing on the equipment. Tests must include activating the ground-fault test circuit as required by § 75.814(c).

(b) Each ground-wire monitor and associated circuits must be examined and tested at least once each 30 days to verify proper operation and that it will cause the corresponding circuit-interrupting device to open.

(c) When examinations or tests of equipment reveal a fire, electrical shock, ignition, or operational hazard, the equipment must be removed from service immediately or repaired immediately.

(d) At the completion of examinations and tests required by this section, the person who makes the examinations and tests must certify by signature and date that they have been conducted. A record must be made of any unsafe condition found and any corrective action taken. Certifications and records must be kept for at least one year and must be made available for inspection by authorized representatives of the Secretary and representatives of miners.

§ 75.822 Underground high-voltage longwall cables.

In addition to the high-voltage cable design specifications in § 75.804 of this part, high-voltage cables for use on longwalls may be a type SHD cable with a center ground-check conductor no smaller than a No. 16 AWG stranded conductor. The cables must be MSHA accepted as flame-resistant under part 18 or approved under subpart K of part 7.

§ 75.1002–1 [Removed]

6. Remove § 75.1002–1.

7. Revise § 75.1002 to read as follows:

§ 75.1002 Installation of electric equipment and conductors; permissibility.

(a) Electric equipment must be permissible and maintained in a permissible condition when such equipment is located within 150 feet of pillar workings or longwall faces.

(b) Electric conductors and cables installed in or inby the last open crosscut or within 150 feet of pillar workings or longwall faces must be—

(1) Shielded high-voltage cables supplying power to permissible longwall equipment;

(2) Interconnecting conductors and cables of permissible longwall equipment;

(3) Conductors and cables of intrinsically safe circuits; and

(4) Cables and conductors supplying power to low- and medium-voltage permissible equipment.

BILLING CODE 4510–43–P

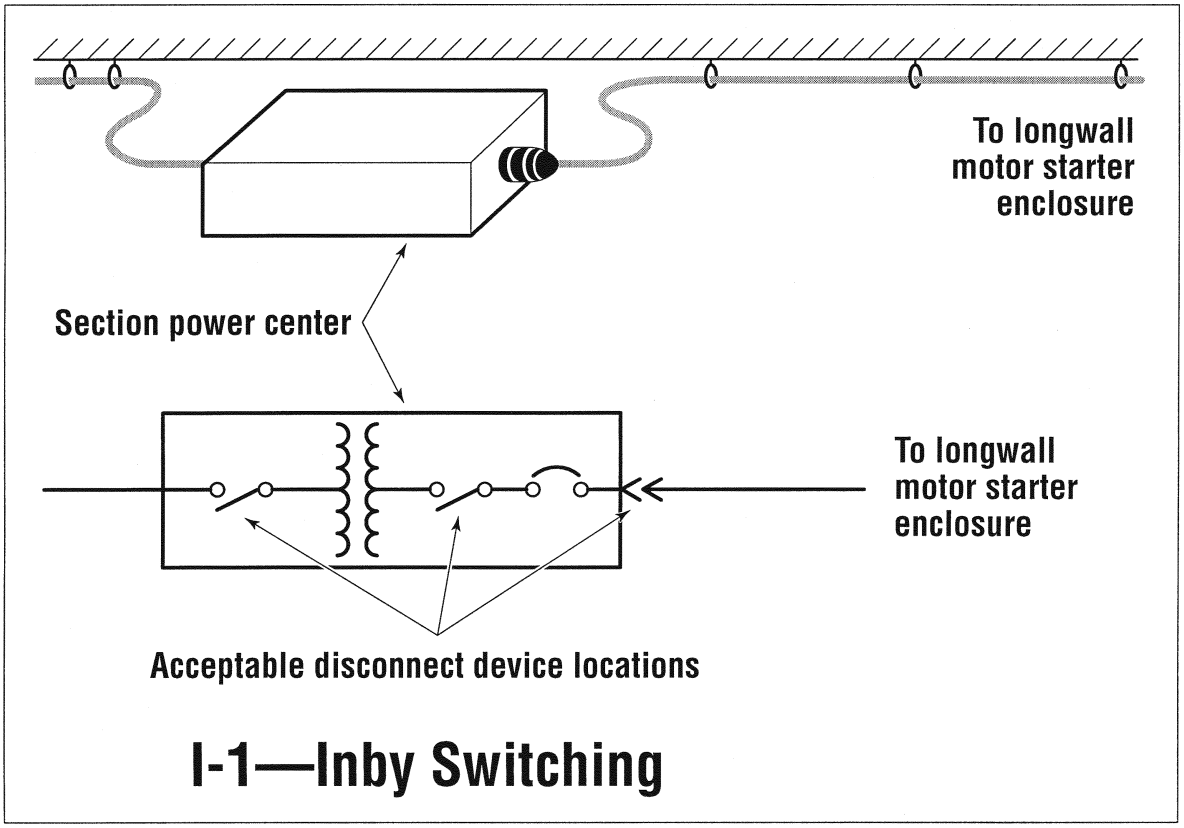

I-1—Inby Switching

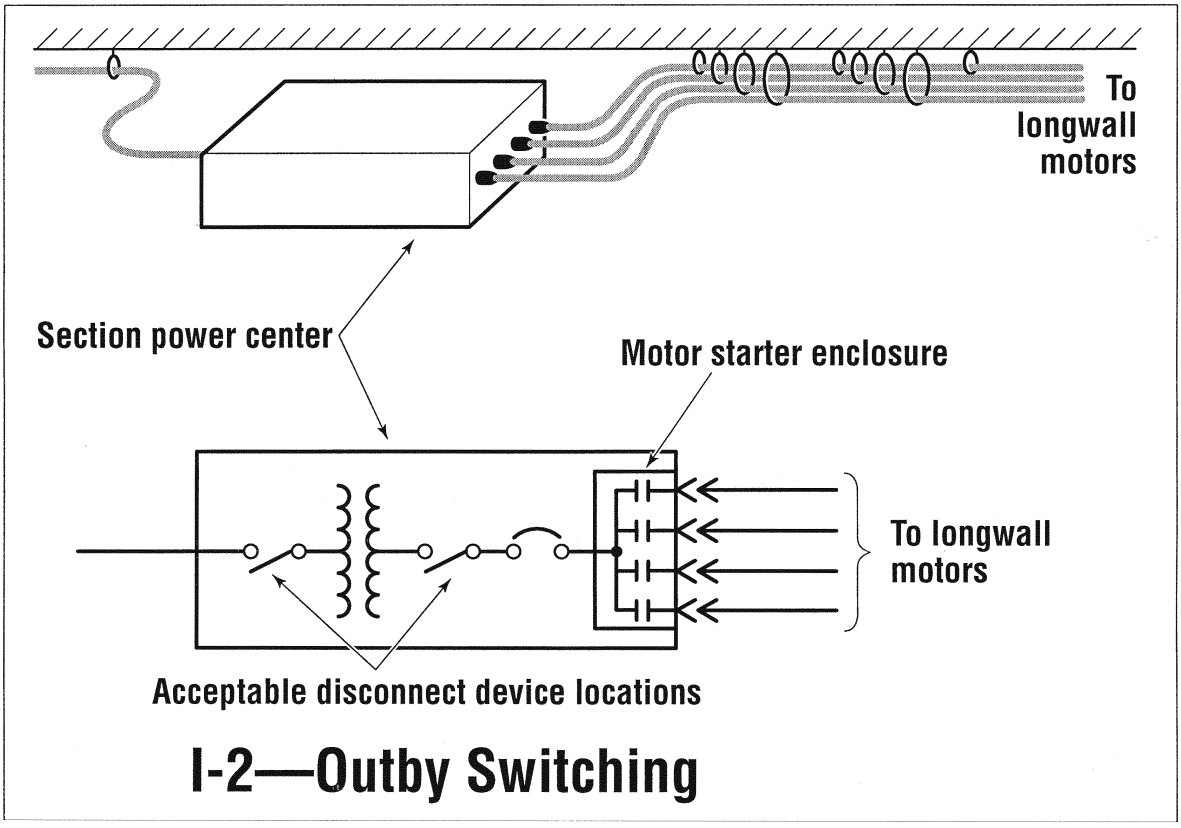

I-2—Outby Switching

[FR Doc. 02–4863 Filed 3–8–02; 8:45 am]
BILLING CODE 4510–43–C

Federal Register

Monday,
March 11, 2002

Part II

Department of Labor

Mine Safety and Health Administration

30 CFR Parts 18 and 75

Electric Motor-Driven Mine Equipment and Accessories and High-Voltage Longwall Equipment Standards for Underground Coal Mines; Final Rule

DEPARTMENT OF LABOR

Mine Safety and Health Administration

30 CFR Parts 18 and 75

RIN 1219–AA75

Electric Motor-Driven Mine Equipment and Accessories and High-Voltage Longwall Equipment Standards for Underground Coal Mines

AGENCY: Mine Safety and Health Administration (MSHA), Labor.

ACTION: Final rule.

SUMMARY: This final rule establishes MSHA's new mandatory electrical safety standards for the installation, use, and maintenance of high-voltage longwall mining systems used in underground coal mines. The final rule also includes design approval requirements for high-voltage equipment operated in longwall face areas of underground mines. These provisions allow the use of high-voltage longwall face equipment with enhanced safety protection from fire, explosion, and shock hazards. In addition to providing a safer mining environment and facilitating the use of advanced equipment designs, the final rule reduces paperwork requirements by eliminating the need for petitions for modification (variances).

DATES: This regulation is effective May 10, 2002. The incorporation by reference of certain publications listed in the rule is approved by the Director of the Federal Register May 10, 2002.

FOR FURTHER INFORMATION CONTACT: Marvin W. Nichols, Jr., Director, Office of Standards, Regulations and Variances, MSHA, 4015 Wilson Boulevard, Arlington, Virginia 22203–1984. Mr. Nichols can be reached at *nichols-marvin@msha.gov* (Internet e-mail), 703—235–1910 (voice), or 703–235–5551 (fax). You may obtain copies of the final rule in alternative formats by calling this number. The alternative formats available are either a large print version of the final rule or the final rule in an electronic file on computer disk. The final rule also is available on the Internet at *http://www.msha.gov/REGSINFO.HTM.*

SUPPLEMENTARY INFORMATION:

I. Background

On December 4, 1989, the Mine Safety and Health Administration (MSHA) published a proposed rule (54 FR 50062) to revise its electrical safety standards for underground coal mines. That proposed rule addressed all of the Agency's electrical standards for underground coal mines and allowed the use of high-voltage longwall equipment. However, it did not specifically focus on the safety issues related to the use of high-voltage longwall equipment. The Agency published a new proposed rule (57 FR 39036) on August 27, 1992, related specifically to the safe use of high-voltage longwall equipment in underground coal mines. These rules also specifically addressed approval requirements for high-voltage electrical equipment operated in longwall face areas of underground coal mines. The comment period on the proposed rule was scheduled to close on October 23, 1992, but was extended to November 13, 1992 (57 FR 48350). On October 18, 1995, (60 FR 53891), MSHA reopened the rulemaking record for additional comments to the proposed rule to provide all interested parties an opportunity to submit additional comments. The comment period was scheduled to close on November 14, 1995, but was extended to December 18, 1995 (60 FR 57203). The Agency received no requests for a public hearing on the proposed rule. The record was reopened December 28, 1999, for comments on the updated Preliminary Regulatory Impact Analysis (PRIA). The record closed February 28, 2000. Only one comment was received. The commenter agreed with our economic analysis of the cost impact of the proposed rule.

These revised standards allow the use of high-voltage longwall mining systems. Longwall mining methods have undergone numerous advances in technology during the past 25 years. These technological advances have led to improved and safer systems. The additional requirements under 30 CFR part 18 provide enhanced safety protections that are consistent with advances in mine technology that allows high-voltage switchgear to be used on face equipment. Title 30 CFR parts 18 and 75 of this final rule implements a number of changes to approval and safety requirements for high-voltage equipment to accommodate the advances in technology in a manner that protects the safety of miners.

A. Part 18 Electric Motor-Driven Mine Equipment and Accessories

Electrical equipment horsepower in mines has increased over the years. The voltages required to operate this equipment have also increased to accommodate the design of practical and efficient equipment. The design of safe, efficient, and practical high-voltage electric equipment has improved dramatically in recent years. Because of the industry's need for higher voltages and the marked improvement in the design and manufacturing technology of high-voltage components, MSHA developed rules that establish requirements for safe high-voltage electric equipment use. This rule provides improved design requirements for longwall equipment, consistent with existing requirements in 30 CFR part 18, and contains provisions that accommodate new design technology, are practical, and lessen burdens on the mining community, while preserving safety and health protections for miners.

The safety criteria supporting the rule are based on research conducted over the past 18 years by the former U.S. Bureau of Mines (USBM) and MSHA. USBM functions are now a part of the National Institute of Occupational Safety and Health. This research included the following: (1) Foster-Miller research, under USBM contract No. H0308093, which developed a recommended high-voltage permissible loadcenter criteria; (2) MSHA research, under USBM contract No. J0333909, which resulted in modified criteria to address high-voltage permissible switchgear enclosures and the development of test facilities for acceptance of high-voltage permissible loadcenters and switchgear enclosures; (3) Follow-up MSHA inspections on high-voltage machines and longwall mining systems operating under experimental permits to confirm design requirements and operational safety; (4) MSHA internal research and review of engineering reports for further analysis of hazards relating to explosion-proof enclosures which contain high-voltage switching; and, (5) Input from various technical experts throughout the mining community. These criteria are technically sound and have the general consensus of the mining community, including equipment manufacturers and other interested parties.

The first high-voltage longwall system started operating in 1985. Since that time we have issued approximately 130 system design approvals for high-voltage longwall equipment. Over the last 16 years, no electrical-type fatalities or serious injuries occurred to miners because of high-voltage equipment used in accordance with over 100 granted high-voltage petitions for modification (petitions). Because of this new improved high-voltage technology, the designed safety benefits and the observed use experience, MSHA is revising its existing 30 CFR part 18 electric motor-driven mine equipment and accessories approval requirements by adding specific design requirements

for high-voltage longwall equipment in underground mines.

MSHA received comments from all segments of the mining industry, and the final rule addresses these comments. Many commenters were in favor of the new approval requirements and were in agreement on the majority of the provisions in the proposed rule. MSHA carefully reviewed all of the comments. This resulted in the modification of four of the sixteen technical requirements addressed in the proposed rule. We considered the views of all interested parties, including: mine operators; equipment manufacturers; miners' representatives; and other government agencies in developing this final rule.

MSHA is publishing this high-voltage longwall approval rule (30 CFR part 18) along with mandatory safety standards regarding high-voltage longwall equipment (30 CFR part 75). This new 30 CFR part 18 rule provides additional high-voltage equipment specifications that must be followed by the manufacturer in order to obtain MSHA approval of the equipment. The new 30 CFR part 75 rule provides installation, use, and maintenance requirements for high-voltage longwalls in underground coal mines.

B. Part 75 High-Voltage Longwall Equipment Safety Standards

This part of the final rule provides safety requirements for underground high-voltage longwall systems. Currently, longwall mining is permitted under MSHA's existing standards only if it uses low- or medium-voltage electrical power. High-voltage longwall systems are being used, but only when approved by MSHA through the petition for modification process under § 101(c) of the Federal Mine Safety and Health Act of 1977 (Mine Act). During the last 15 years, MSHA has evaluated the safe use of high-voltage longwall equipment, under a petition process that permits a mine operator to request that the application of a safety standard be modified at a particular mine. MSHA grants a petition when it determines that a mine operator has an alternative method which provides the same measure of safety protection as the existing standard, or when the existing standard would result in diminished safety protection to miners. Over the past 15 years, MSHA has granted over 100 petitions for modification to use high-voltage electrical power with longwalls. In the Agency's evaluation of the use of high-voltage longwall mining systems, MSHA concluded that they can be safely used, provided that certain conditions are met. Specifically, the Agency found that the previous safety concerns about explosion, fire and shock hazards initially associated with high-voltage use are sufficiently addressed by this newly-developed technology. In each of the petition cases the Agency granted, MSHA performed a specific on-site investigation to verify this finding. For example, we recognized that high-voltage electric equipment and circuit design improvements in combination with sensitive electrical circuit protections reduce fire, explosion and shock hazards. Newly designed cable handling systems provide additional safety protections against electrical shock, fire and explosion hazards when the cable is moved. Further, lighter power cables are available which reduce back strain and other injury risks to miners from the heavier cable lifting and hauling often associated with the moving or lifting of low- to medium-voltage cables. Moreover, there have been no electrical fatalities and no serious electrical injuries to miners from high-voltage equipment used under the granted modifications.

Because of the new improved high-voltage technology, with its attendant safety benefits, MSHA is revising its existing 30 CFR part 75 electrical safety standards. This final rule does not reduce the protection afforded by existing 30 CFR part 75 standards. It does, however, provide increased protection from electrical hazards, and reduces paperwork burden. It also reduces the time and cost to all parties associated with the petition for modification process. This final rule is implemented in conjunction with revisions to 30 CFR part 18, that address approval requirements for high-voltage equipment. The additional requirements under 30 CFR part 18 are also consistent with advances in mine technology, allowing high-voltage switchgear to be used on face equipment with enhanced safety protection from fire, explosion and shock hazards.

MSHA received comments from all segments of the mining community. Comments from labor, industry and manufacturers generally agree with the proposed rule. The final rule, to the extent feasible and appropriate, responds to commenters' concerns and reflects general consensus of various parties. However, MSHA did not adopt all comments received.

Joint commenters representing both industry and labor recommended that operators mining under granted high-voltage petitions containing non-electrical provisions continue to comply with such provisions. Labor commenters requested that standards addressing high-voltage longwalls also include provisions addressing non-electrical safety and health areas. Specifically, they noted that high-voltage longwall systems of extended widths and lengths can adversely affect not only ventilation, but shearer mounted methane monitors, intake escapeways, exposure to respirable dust, tailgate travelways, and storage plans for self-contained self-rescuers (SCSR's), as well as return entry rockdusting during mining.

It is the Agency's view that non-electrical safety and health issues related to the use of high-voltage longwalls are fully addressed by existing safety and health standards under 30 CFR parts 70 and 75. This view has been upheld by administrative law judge, Assistant Secretary and Court of Appeals decisions. *UMWA* v. *Federal Mine Safety and Health Administration*, 931 F. 2d 908,913 (D.C. Cir. 1991). The promulgated standards relating to ventilation and escapeways under 30 CFR 75.300 *et seq.* (61 FR 9764, March 11, 1996) provide protection with respect to ventilation and escapeways. Mandatory health standards under part 70 address exposures to respirable dust. Section 75.215—*Longwall mining systems*—addresses longwall tailgate travelway protection. Storage plans for SCSRs may be approved by MSHA District Managers in accordance with the specific conditions at each mine under § 75.1714–2—*Self-rescue devices; use and location requirements.* Existing § 75.400—*Accumulation of combustible materials*—provides protection against float coal dust and § 75.402—*Rock dusting*—requires adequate rockdusting measures. MSHA continues to work on improved respirable dust protection requirements in response to recommendations made by the Secretary of Labor's Advisory Committee on the Elimination of Pneumoconiosis Among Coal Mine Workers.

MSHA is aware that several granted modifications for high-voltage longwalls contain non-electrical requirements specific to the affected mine. These requirements are the result of settlement negotiations arising out of the petition process and are not required as part of this electrical standard. Parties to the current petition process may, through a voluntary, cooperative effort, continue to follow the non-electrical provisions after this final rule becomes effective. Moreover, as indicated above, existing and new standards substantially address these concerns and result in no diminution of safety and health protection currently afforded to miners. Moreover, the Agency continually reviews existing standards for

improvements that will enhance miner safety.

Some commenters suggested that the final rule allow a longer phase-in period, where equipment modifications are necessary. The Agency does not believe that a delayed effective date is necessary. Many operators are already complying with these requirements under the petition for modification process and the modern technology necessary to implement the final rule is readily available.

II. Discussion of Final Rule

The following section-by-section portion of the preamble discusses each provision affected, starting with the provisions in part 18. The text of the final rule is included at the end of the document.

Part 18 Electric Motor-Driven Mine Equipment and Accessories

This final rule addresses only those areas where specific additions to 30 CFR part 18 are necessary for the approval of high-voltage longwalls. The existing requirements of 30 CFR part 18 that apply to this equipment have not been revised. Examples of these types of requirements are the general construction requirements of the high-voltage enclosures and the short-circuit and overload protection to be provided. The overload and short-circuit protective device settings were not revised and will continue to be evaluated under existing requirements and Agency policy.

The main safety protections addressed in the final rule are summarized into four areas: (1) Prevention of a high-voltage arc from occurring; (2) Prevention of the resulting heat or flame from igniting a methane-air mixture surrounding the machine if an arc or methane explosion occurs; (3) Prevention of enclosure failure from an increased pressure rise if an arc or methane explosion occurs within the explosion-proof enclosure; and, (4) Personal protection for miners from electrical shock hazards when working in or around the high-voltage equipment.

Section 18.53 High Voltage Longwall Mining Systems (Nameplate Ratings From 1,001 Volts Through 4,160 Volts)

Paragraph (a) of this final rule requires the separation of compartments containing low- and medium-voltage circuits from those with high-voltage circuits in each motor-starter enclosure by location, partitions or barriers. Partitions and barriers, under this final rule, like the proposed rule, are required to be constructed of grounded metal or nonconductive insulating board. These requirements protect against shock hazards which may arise from inadvertent contact with energized high-voltage circuits. With the exception of a controller on a shearer, compliance with this section requires the components within each high-voltage motor-starter enclosure be segregated into separate compartments by voltage classification. The installation of the barriers and partitions provides separation of components in each high-voltage motor-starter enclosure. When complete separation of voltage classifications is not possible with barriers or partitions where both medium- and high-voltage circuits or both low- and high-voltage circuits are connected to a component or device, that component is required to be located in the motor contactor or disconnect device compartment.

This rule covers both explosion-proof and nonexplosion-proof motor-starter enclosures that are presently used by the mining industry. MSHA's policy has been to require barriers and partitions to separate the disconnect device compartment, control/communications compartment and motor contactor compartment in both power centers and motor-starter enclosures. If a motor-starter enclosure is part of a power center, then the partitions and barriers required by this rule only apply to barriers and partitions for the disconnect device compartment, control/communications compartment, and motor-starter compartment of the power center. This rule does not apply to other parts of the power center or to separate power centers that supply power to motor-starter enclosures. The mining industry presently provides barriers for power centers to separate high-voltage components from low- and medium-voltage circuits and equipment. MSHA encourages the industry to continue to provide barriers and partitions in power centers to minimize shock hazards by limiting exposure of personnel to high-voltage components when troubleshooting and testing low- and medium-voltage circuits. If barriers and partitions are not provided on power centers, the power center must be deenergized from an outby set of high-voltage visible disconnects and the high-voltage circuit grounded before troubleshooting and testing is performed on low- or medium-voltage circuits or equipment in the same compartment with high-voltage circuits or equipment.

Commenters suggested that, because of overall machine design considerations, an exception be provided for the controller on a shearer. In response to this comment, MSHA acknowledges that a shearer is a special case. The shearer is not required under § 18.53(f) to have a disconnect switch. Therefore, in an effort to address this issue, the final rule has been modified exempting the requirements of paragraph (a) when applied to a shearer.

One commenter recommended that the term ''location'' be deleted from the final rule, suggesting that there must be a physical separation within compartments to prevent accidental contact with a high-voltage circuit while troubleshooting low- and medium-voltage circuits. Another commenter proposed the use of separate compartments having explosion-proof walls between one compartment and the next. As noted in the proposed rule, the intent of this provision is to minimize shock hazards by preventing exposure of personnel to high-voltage components when troubleshooting and testing low- and medium-voltage circuits in accordance with § 75.820. MSHA believes that this can be accomplished by various types of partitions or barriers, including designing the enclosure into several separate explosion-proof compartments. When designing the partitions or barriers, however, consideration should be given to possible effects of pressure-piling within the enclosure. The use of the word ''location'', in the proposed rule allowed the option of having separate enclosures to house the various compartments, as noted by the commenter. In response to these comments, the final rule removes the word ''location'' to provide for flexibility, but clarifies that the requirement applies to each motor-starter enclosure.

Comments were also received suggesting that we change the word ''board'' to ''material'' in regard to construction of barriers and partitions. Since the word ''board'' suggests a more sturdy barrier than ''material,'' the final rule remains as proposed.

Paragraph (b) of the final rule, like the proposed rule, requires motor-starter enclosure compartment(s) containing high-voltage components be provided with cover interlock switches. These interlock switches will protect miners entering enclosures from shock hazards resulting from accidental contact with energized circuits. A minimum of two interlock switches per cover is required and must be wired into the circuitry so that operation of either switch will deenergize the incoming high-voltage circuits. The Agency believes that a second switch coupled with required maintenance under 30 CFR 75.512 will provide the necessary protection to ensure that the high-voltage circuits are deenergized whenever a cover is

removed. MSHA recommends either a magnetic or a whisker-type switch. MSHA's follow-up inspections of high-voltage equipment with plunger-operated switches reveal that these switches may stick and not operate effectively after exposure to the mine environment.

This rule covers both explosion-proof and nonexplosion-proof high-voltage motor-starter enclosures. MSHA's high-voltage longwall petitions require interlock switches for high-voltage compartments in both power centers and motor-starter enclosures. When a motor-starter enclosure is part of a power center, the interlock switches required by this rule only apply to motor-starter compartments of the power center. This rule does not apply to other parts of the power center or to separate power centers that supply power to motor-starter enclosures. The mining industry presently provides interlock switches for high-voltage compartments on power centers. MSHA encourages the industry to continue to provide interlocks switches for high-voltage compartments of power centers.

There were no comments on this paragraph. However, the last sentence of the proposed rule was deleted to clarify the Agency's intent that at least two switches be used to satisfy 30 CFR part 18.53 (b) requirements.

Paragraph (c) of the final rule, like the proposed rule, requires that circuit-interrupting devices installed in motor-starter enclosures be designed and installed to prevent automatic reclosure. Compliance with this provision protects miners working on the circuit or in other hazardous situations from unanticipated reenergization of the circuit. For example, faults occur in underground electrical systems as a result of roof fall damage or equipment insulation failure. Under such circumstances, the use of automatic reclosing circuit-interrupting devices would create shock and fire hazards should the devices reclose automatically when a short-circuit or ground-fault condition exists in the circuit. There were no comments on this paragraph. Therefore, the language in the final rule has not been changed from the proposed rule.

Paragraph (d) of the final rule, like the proposed rule, specifies that control transformers installed in each longwall motor-starter enclosure or control transformers that supply control power to each longwall motor-starter enclosure, must have electrostatic (Faraday) shielding, grounded by at least a No. 12 American Wire Gauge (AWG) grounding conductor, installed between the primary and secondary windings. Compliance with this provision protects against shock hazards should a fault develop between the primary and secondary windings. Faraday shielding provides electrical isolation between the high-voltage primary and low-voltage secondary windings of these transformers. As a secondary benefit, Faraday shielding of control transformers assures that transients occurring on the primary circuit are not transferred to the secondary circuit. Such transients could cause premature damage to electrical control equipment and create an economic burden for the mining industry.

This rule requires Faraday shielding for control transformers located in both explosion-proof and nonexplosion-proof motor-starter enclosures that are presently used by the mining industry. Also, this rule requires Faraday shielding for control transformers that supply motor-starter compartments, even if the control transformer is located in a separate power center. This rule does not cover control transformers for power centers that do not supply power to the motor-starter enclosure.

Paragraph (d) also requires the secondary nominal voltage of the control transformer be no more than 120 volts, line-to-line. This is consistent with the existing policy interpretation of 30 CFR part 18 control voltage limitations under § 18.47. There were no comments on this paragraph and therefore, the wording remains the same as the proposed rule.

Paragraph (e) of the final rule, like the proposed rule, requires test circuits to verify the integrity and proper operation of the ground-wire monitors and ground-fault protective devices. Test circuits for ground-wire monitors and ground-fault circuits assure that the circuits can be tested frequently in a manner that minimizes the hazards to personnel conducting the tests. Incorporating these test circuits into the longwall circuitry eliminates the need to test these protective devices by other means that could result in a shock hazard by placing personnel in close proximity to exposed energized conductors.

Some commenters noted that the testing of backup ground-fault devices located across the grounding resistor would require the application of an actual phase-to-ground fault, which could be hazardous. These commenters suggested that the ground-fault test circuit inject a primary current into the transformer and not subject the equipment to an actual phase-to-ground fault. In addition, another commenter supported the opinion that it is a dangerous practice to test ground-fault protection by making direct connections between phase and ground, and stated that MSHA should establish a policy on this so that the matter is resolved.

In response to these comments, unlike the proposed rule, the final rule includes a requirement that each ground-fault test circuit be designed to inject a primary current of 50 percent or less of the maximum ground-fault current through the current transformer to cause the corresponding circuit-interrupting device to open. This requirement is necessary to reduce the likelihood of a hazardous condition resulting from a phase-to-ground fault. A similar requirement is added to the final rule under 30 CFR 75.814(c).

Paragraph (f) of the final rule requires each longwall motor-starter enclosure, with the exception of a controller on a shearer, to be equipped with a disconnect device. Opening of the device deenergizes all high-voltage power conductors extending from the enclosure, except the conductors supplying power to the enclosure. Compliance with this paragraph provides for convenient and safe deenergization of high-voltage circuits and other components during testing and troubleshooting work, thus minimizing shock hazards.

A joint industry commenter suggested that the word ''incoming'' be inserted before the phrase ''disconnect device''. MSHA believes this is implied, since the device must deenergize all high-voltage power conductors extending from the enclosure. Therefore, the language of final rule remains as proposed.

Paragraph (f)(1) of the final rule, like the proposed rule, specifies that a single handle provide for simultaneous operation through a mechanical connection of multiple switches located within an enclosure. The simultaneous operation of multiple disconnect devices by the use of a single handle ensures that all high-voltage conductors extending from the enclosure are deenergized when the disconnect device is in the open position. This arrangement ensures that personnel entering other enclosures are protected from a shock hazard resulting from accidental contact with energized circuits in the event the wrong circuit is disconnected.

The words ''isolator switch'' and ''switches'' were removed in the final rule to minimize confusion. There were no comments on this paragraph and the language in the proposed rule remains unchanged except for the above clarifications.

Paragraph (f)(2) of the final rule, like the proposed rule, further defines the requirements of a disconnect device. The switch must be rated for the maximum phase-to-phase circuit voltage of the system. The ability to verify, by visual observation, that the switch's contacts are opened is also required. This verification must be determined without the removal of any enclosure cover. The removal of an enclosure cover to verify opening of the contacts presents an increased shock hazard to miners because of exposed energized high-voltage components.

Also included under this paragraph are the requirements that all load-side power conductors be grounded and the device be provided with a means to be locked when the device is in the ''open'' position. These requirements guard against the hazard of maintenance personnel being exposed to high-voltage energized parts due to residual voltage or inadvertent energization of the circuit.

The final requirements of this paragraph address the interrupting capability of the disconnect device. A disconnect device installed in an explosion-proof enclosure must be designed and installed to cause the current to be interrupted automatically prior to the opening of the device. This requirement addresses the concern about an explosion-proof enclosure failure because of an increased pressure rise. This pressure rise can result when an arc or methane explosion occurs within the explosion-proof enclosure. When the enclosure is not explosion-proof, as in outby switching, the device is required to either be installed in the circuit so that the circuit is automatically interrupted prior to the opening of the device or the device is required to be capable of interrupting the full-load current of the circuit. There were no comments on this paragraph and the language in the proposed rule remains unchanged in the final rule.

Paragraph (g) of the final rule addresses the interlocking of the disconnect device. These interlocking requirements reduce shock hazards by increasing the probability that the high-voltage circuits will be isolated and deenergized prior to performing testing and troubleshooting on the low- and medium-voltage circuits and ensure that high-voltage circuits may only be energized at the proper time following this activity.

This rule covers both explosion-proof and nonexplosion-proof motor-starter enclosures that are presently used by the mining industry. MSHA's policy has been to interlock disconnects with the control circuit in both power centers and motor-starter enclosures. If a motor-starter enclosure is part of a power center, then this rule covers the power center. This rule does not apply to separate power centers that supply power to motor-starter enclosures. The mining industry presently provides this interlocking of the disconnect device for power centers. MSHA encourages the industry to continue to interlock disconnects with the control circuits to facilitate troubleshooting and testing high-voltage circuits and equipment while the high-voltage circuits are disconnected. This maintains the existing level of protection because the interlock disconnects provide an additional safeguard against inadvertent exposure to energized high-voltage circuits.

One commenter noted that the proposed rule calls for deenergizing the incoming high-voltage circuit if the normal/test auxiliary switch is not in the normal position while closing the main circuit-interrupting device and the disconnect device (isolator switch). This commenter stated that this requirement would necessitate a retrofit in existing longwall controllers since the normal/test switch must be in the normal position when the disconnect switch is closed in order for the control circuit to function at all. This would prohibit the closing of the circuit-interrupting device and would disable the control circuitry. With the disconnect device in the open/grounded position, the test circuitry cannot be used unless the normal/test switch is in the test position. The commenter further indicated that, in either case, the incoming high voltage does not present a hazard.

Other commenters recommended that the control circuits within each high-voltage motor-starter enclosure be interlocked with the disconnect device, except for the controller on a shearer, so that the control circuit can be powered with an auxiliary test switch when the disconnect device is in the open and grounded position; and the disconnect device cannot be closed without de-energizing the incoming high-voltage circuit unless the auxiliary test switch is in the normal operating position. These commenters stated that, in many cases, it is necessary to close the main circuit-interrupting device with the auxiliary switch in the test position.

MSHA has carefully reviewed and considered these comments. The final rule retains the requirement that the control circuit for high-voltage motor-starters can only be energized through an auxiliary test switch when the disconnect switch is open and the load power conductors of the high-voltage circuit are grounded. The proposed requirement that neither the main circuit-interrupting device nor the disconnect device can be closed without deenergizing the incoming high-voltage circuit unless the auxiliary test switch is in the normal operating position, has been replaced with a requirement which more clearly states the expected performance of the control interlock circuit. The final rule requires high-voltage control circuits to be interlocked so they can be energized only when the disconnect switch is either in the ''closed'' or the ''open and grounded'' positions. High-voltage control circuits may not be operated in any other intermediate positions of the disconnect switch or auxiliary switch. This requirement will prevent unintentional energization of high-voltage components. The control circuit can be energized only when the disconnect switch is ''open and grounded'' with the auxiliary switch in the ''test'' position, or when it is closed with the auxiliary switch in the ''normal'' position. MSHA has not included language in this paragraph to specifically exclude the controller on a shearer from these interlock requirements, as suggested by some commenters. Shearers are not required to be equipped with a disconnect device as stated in § 18.53(f) of this final rule and MSHA does not intend that this provision be applicable to shearers. Therefore, except for the above stated clarifications, the final rule remains as proposed.

Paragraph (h) of the final rule requires that the electrical protection be set at an appropriate value to provide protection for the size and length of the longwall motor and shearer cable used, based on an ''available fault current'' study that must be submitted to MSHA. Proper electrical protection is essential in preventing a fire, explosion or shock hazard resulting from inadequate sizing of electrical cables.

Appendix I of existing 30 CFR part 18 includes maximum trailing cable protective device settings and trailing cable length restrictions as specified in Table 8 and in Table 9. These have, in the past, been used as guidance in evaluating cables on longwalls rated at less than 1,000 volts. Under this final rule and consistent with agency policy, the length restrictions and device settings do not apply to high-voltage longwall motor and shearer cables. The procedures used in evaluating high-voltage longwalls cables and settings include a review of the applicant's fault-current study to determine the minimum expected short-circuit currents available at the farthest projected installation in the electrical system.

This paragraph of the final rule has been clarified, in response to a proposed 1989 electrical rule comment, to indicate that trailing cables would also be included in the required evaluation to ensure adequate protection for the length and conductor size of all cables, including longwall motor, shearer and trailing cables. However, MSHA does not intend to specify a fixed maximum setting for short-circuit protective devices, as noted by the commenter. MSHA intends to be flexible by assessing each installation individually. The submitted fault study is the basis in determining the settings, and for permitting higher trailing cable circuit protective device settings and cable lengths than specified by 30 CFR part 18. MSHA recognizes that it is practical to design longwall systems with higher circuit protective device settings and longer cable lengths in order to lessen economic burdens on the mining community while preserving safety and health protections for miners. Some commenters noted that the fault study is unique to each mine and that this requirement should not be included in 30 CFR part 18. They suggested that the regulation is more suitable for inclusion in part 75. MSHA disagrees. In order for a longwall mining system to be safely designed, the designer must know the parameters under which the longwall will be operated. These parameters would include available fault currents. The final rule requires that this information be provided to MSHA to determine whether cables are adequately protected. Historically, longwalls are custom-made systems and are not designed for more than one mining company. The fault study should take into account worst-case projections (i.e., longest cable lengths, smallest Kilo-Volt Amperes (KVA) Power Center). Enforcement personnel will also use this information to ensure compliance with § 75.518–1—*Electric equipment and circuits; overload and short circuit protection; minimum requirements.* Except as clarified above, the final rule remains as proposed.

Paragraph (i) of the final rule requires all longwall motor and shearer cables with nominal voltages greater than 660 volts to have a cable construction with a grounded metallic shield around each power conductor. This regulation requires the incorporation of the grounded shield around each power conductor providing additional personnel protection against shock and electrocution hazards. This is necessary because any cable faults would cause phase-to-ground short-circuit currents to flow. An extra level of protection is achieved because the phase-to-ground short-circuit currents, unlike the phase-to-phase short-circuit currents that may flow from faults in other cable constructions, are limited in magnitude by the grounding circuit components.

Some commenters suggested that these cables should be assembled with a grounded shield around each power conductor but that the shield should not be specified as metallic since these power systems restrict ground-fault current to reduced values and the cables are constantly flexed. They believed that an improved cable could be developed with a nonmetallic shielding material around each power conductor. In response to this comment, MSHA believes that this technology has not been demonstrated or shown to provide equivalent safety in underground coal mines. Although MSHA supports the application of new technology, questions such as splicing reliability would need to be addressed before incorporating these types of cables on longwalls. If a reliable system using this type of cable were developed and equivalent safety were demonstrated, it could be addressed under existing §§ 18.20(b)—*Quality of material, workmanship, and design* and/or 18.47(d)(6)—*Voltage limitation* through the construction and design requirements for MSHA approval. The final rule has not been modified, as suggested by commenters, and remains as proposed.

Paragraph (j) of the final rule specifies that high-voltage motor and shearer circuits be provided with instantaneous ground-fault protection set at not more than 0.125-amperes. The current transformers (CT) used for ground-fault protection are required to be of the single window-type and installed to encircle all three phase conductors. This will provide highly sensitive and responsive ground-fault detection systems, using new technology such as solid state relays, for high-voltage circuits supplying electric face equipment. The protective devices are required to operate instantaneously when exposed to ground faults that exceed the trip setting of the ground-fault protective device. Therefore, compliance with this standard will greatly reduce the likelihood of fires and shock hazards that result from ground faults on the high-voltage circuits or equipment.

The use of the single window-type current transformer encircling all three phase conductors is the most reliable method for detection of ground faults in mine power systems. This type of relaying (zero-sequence) is not affected by CT error and gives very sensitive tripping. This scheme is widely used in mining at all voltages. Requiring all three phase conductors to be encircled by the CT prohibits the equipment safety grounding conductors from passing through or being connected in series with the CT. If the safety grounding conductor passes through or is connected in series with the CT, it is possible for the fault currents to flow through parallel paths, thereby reducing the reliability of the ground fault protection.

Some commenters suggested that if the full-load current of the circuit exceeds 200 amperes, the instantaneous ground-fault protection be set at not more than 0.200-amperes. They stated that it is very difficult to produce ground-fault current transformers that can reliably discriminate between small ground-fault currents and larger motor starting currents and that when the full-load current of a circuit exceeds 200 amperes, it is reasonable to expect motor starting currents in excess of 2,000 amperes. They asserted that a small increase in the setting of the ground-fault protection is justified for certain high-current circuits and that the suggested 0.200-ampere setting would still be less than 40 percent of the maximum ground-fault current. They noted that the specification of the current transformers is very rigid and stated that the regulation should allow for new technology if it can provide equal or improved protection. In relation to ground-fault protection, a commenter focused on MSHA's statement that zero sequence type relaying ''is not affected by CT error.'' The commenters stated that, in their experience, erroneous signals are produced in the CT's if the current levels are sufficiently high. They noted that when starting currents flowing in the power circuit are in excess of 2000A it is possible that an ''error current'' exceeding 100mA may be fed to the relay, causing nuisance tripping. For this reason, it is their belief that the relays on the power center output cables to the longwall controls are now set to a higher current of 200–300mA and these cables carry the combined starting currents of two or three motors. They concluded that as a result, when the size of individual motors gets larger, this problem will be experienced on motor cables.

MSHA has reviewed these issues and determined that reliable, sensitive ground-fault protective devices are commercially available and that they have been successfully used to correct the problems described by the commenters. These devices can safely and reliably operate at 0.125-ampere or

less. The use of a single window-type current transformer to encircle only the three phase conductors assures that sensitive ground-fault devices will detect all ground faults exceeding the setting of the device. Detection devices inserted in the ground wire may not detect all ground-fault currents and could compromise the integrity of the ground circuit. Therefore, the final rule has not been modified and remains as proposed.

Paragraph (k) of the final rule, like the proposed rule, requires safeguards against corona to be provided on all 4,160 volt circuits in explosion-proof enclosures. Corona is a luminous discharge that occurs around electrical conductors that are subject to high electrical stress. One danger inherent with high-voltage equipment is that excessive electrical stress can cause premature breakdown of insulating materials, which could result in arcing, thus creating an explosion hazard in the presence of corona. Corona usually doesn't present a hazard until voltage of 8kV are reached. However, even at 4,160 volts, safeguards should be taken. This would include using cables with a corona resistant insulation such as ethylene propylene, to avoid small nicks or cuts in the cable insulation and to minimize high-voltage transients. This provision is not intended to require stress cones or similar termination schemes. There were no comments on this paragraph. The final rule has not been modified and remains as proposed.

Paragraph (l) of the final rule, like the proposed rule, requires limiting the maximum explosion pressure rise within an enclosure to 0.83 times the design pressure for any explosion-proof enclosure containing high-voltage switchgear. This requirement protects against explosion hazards that may arise from the effects of a sustained high-voltage arcing fault. This arcing fault may significantly contribute to the pressure rise created in an explosion-proof enclosure during an internal methane-air explosion. Research conducted by the former U.S. Bureau of Mines and MSHA on effects of high-voltage arcing in explosion-proof enclosures concluded that this potential increased pressure rise can be safely addressed through a combination of designing the enclosure for the increased pressure and providing electrical protective devices set to deenergize the incoming circuit before the pressure rise becomes excessive. This provision requires that the maximum explosion pressure rise must be limited to a value that can be safely contained within the explosion-proof enclosure (83 percent of the design pressure). The final rule's performance-oriented language permits compliance through any achievable means. Protective methods used in previously issued approvals and experimental permits consisted of electrical devices with rapid clearing times. However, the rule provides for flexibility and permits alternative methods that may provide equal protection, such as pressure switches or special pressure release devices. There were no comments on this paragraph. The final rule remains as proposed.

Paragraph (m) of the final rule, like the proposed rule, requires that high-voltage electrical components located in high-voltage explosion-proof enclosures cannot be coplanar with a single-plane flame-arresting path. This protective measure will further prevent the heat or flame from an arc or methane explosion in an explosion-proof enclosure from igniting a methane-air mixture surrounding the enclosure. This requirement addresses the possibility of conductor material particles being expelled from the enclosure through the flame-arresting path. Particles of molten material are emitted from the conductors whenever a short-circuit occurs. Expulsion of these particles from the enclosure can occur if their source is in the same plane as the flame-arresting path and a pressure rise coincides with the short circuit. Once these particles are expelled from the explosion-proof enclosure, they can ignite an explosive atmosphere should one be present. This possibility does not arise with multi-plane flame-arresting path surfaces because a deflection in the path would prevent ignitions by expelled particles. There were no comments on this paragraph. The final rule remains as proposed.

Paragraph (n) of the final rule, like the proposed rule, addresses MSHA's concern with the decomposition of insulating materials due to tracking. In the presence of surface contaminants, small levels of current can flow between conductors. As the currents flow, the insulation may carbonize and produce conducting tracks. The conducting tracks may grow progressively across the surface eventually bridging between conductors and causing complete breakdown. Using insulation with an adequate Comparative Tracking Index (CTI) rating can prevent tracking, thus minimizing potential arcing that could lead to an explosion hazard. Paragraph (n) requires that rigid insulation between high-voltage terminals or between high-voltage terminals and ground be designed with creepage distances in accordance with the table labeled ''Minimum Creepage Distances'' included in this section. The required creepage distances are determined based upon the phase-to-phase use voltage and the CTI of the insulation to be used. Creepage distance is based in part on the CTI of the electrical insulating material. An appropriate method of determining the CTI of the electrical insulating material is described in the American Society for Testing and Materials Standard, ASTM D3638 ''Standard Test Method For Comparative Tracking Index of Electrical Insulating Materials.'' The MSHA derived creepage distances in the table are consistent with most commercially available high-voltage components to which this provision applies. There were no comments on this paragraph. The final rule remains as proposed.

Paragraph (o) of the final rule addresses a requirement for Minimum Free Distance (MFD) within an explosion-proof motor-starter enclosure. MSHA's Internal Engineering Report Number 87021701 (available in the rulemaking record) determined that if phase-to-phase arcing occurred, there may be adequate arc energy to heat the walls of the enclosure beyond the safe working temperature. This could cause failure of the enclosure and create an explosion hazard. Distances between the wall or cover of an enclosure and uninsulated electrical conductors inside the enclosure were established to prevent wall or cover damage from phase-to-phase arcing.

Some commenters suggested that the last sentence of the proposed paragraph (o) be revised as follows: ''If a grounded ¼-inch thick steel shield is installed between the area of potential arcing and the adjacent wall/cover area, the minimum free distance requirement is satisfied.'' MSHA believes that this comment was based on a footnote present in the part 18 approval criteria established by MSHA for high-voltage equipment containing on-board switching of high-voltage circuitry. This criteria indicates that the specified MFDs may be reduced if a ¼″ thick steel shield is used between the area of potential arcing and the adjacent wall/cover area. Since this footnote did not cite a MFD or qualify the circumstances under which this shield could be used, MSHA did clarify this criteria exception in the proposed rule, and the final rule remains unchanged with respect to this clarification. A commenter also stated that a steel shield could be mounted in conjunction with an aluminum wall or cover to reduce the required minimum free distance and that the thickness of this steel shield would be used to determine the required minimum free

distance. MSHA has determined that a ¼″ thick steel shield, mounted to maintain a minimum electrical clearance, as suggested by the commenter, would not provide sufficient protection if a phase-to-phase arc occurred. The final rule also permits the use of steel shields greater than ¼″ thick to provide for flexibility and diversification in enclosure design.

Some commenters noted that the proposed regulation classified all enclosures in one of two groups: those with short-circuit currents less than 10,000 amperes and those with short-circuit currents between 10,000 and 20,000 amperes. It was their view that because of the substantial increase in minimum free distance between these groups, MSHA should permit a manufacturer to calculate the appropriate MFD when the short circuit current is between 10,000 amperes and 20,000 amperes. They also recommended that MSHA include a provision that would permit the minimum free distances to be revised based on future research in this area. Finally, they noted that the MFD for a 1-inch thick cover under Column A was omitted.

In response to these comments, MSHA has revised the Minimum Free Distance Table by adding minimum free distance information for short-circuit currents of 15,000 amperes. Additionally under the final rule in paragraph (o)(1), MSHA allows for values not presented in the table provided that they meet the specific engineering formulas on which the table is based. These formulas were developed by MSHA engineers with standard engineering calculations using data obtained from high-energy arc testing. This testing was performed during Foster-Miller research, under USBM Contract No. H0308093. The MSHA research reports and data are part of the rulemaking record and are available for review.

Equipment approved under these circumstances will be limited to equipment used only with power systems that do not generate short-circuit currents that exceed the design parameters used for establishing minimum free distance. In addition, MSHA will consider the use of shields constructed with alternate materials and the use of alternate techniques and methods that preclude the possibility of high-energy arcs heating the walls of explosion-proof enclosures beyond safe working temperatures. If upon evaluation, equivalent safety is demonstrated, MSHA will address these technological advances and the results of additional research in this area, if warranted, under §§ 18.20(b) and/or 18.47(d)(6). MSHA intentionally omitted the MFD value for a 1″ thick steel wall/cover under Column A to minimize confusion. MSHA calculated this value to be 0.3″, which is less than the minimum electrical clearance that must be maintained under § 18.24 for high-voltage equipment. As indicated above, the proposed rule has been modified in part, and adopted in part.

Paragraph (p) of the final rule, like the proposed rule, requires a static pressure test to be performed on each prototype design of explosion-proof enclosure housing high-voltage switchgear prior to explosion tests. The manufacturer is also required to use this test as a routine test on every explosion-proof enclosure housing high-voltage switchgear, at the time of manufacture, or follow an MSHA accepted quality assurance procedure covering the inspection of the enclosure. These quality assurance procedures must include a detailed check of parts against the drawings to determine: (1) That the parts and the drawings coincide and (2) that the minimum requirements stated in 30 CFR part 18 have been followed with respect to materials, dimensions, configuration and workmanship.

MSHA is concerned about the specified design pressure of an enclosure. Presently, an enclosure that is designed for 150 pounds per square inch gauge (PSIG) is tested with a methane explosion. Normally, these pressures do not exceed 100 pounds per square inch (PSI). Since the protective method to prevent over-pressurization in these enclosures would be directly related to the design pressure, MSHA has developed the static pressure test with its acceptable performance criteria to ensure each enclosure design would be capable of withstanding its design pressure. By requiring static pressure testing on each enclosure prototype, MSHA believes that the adequacy of enclosure design would be verified. Additionally, to require either subsequent static pressure testing on each enclosure manufactured or an acceptable quality assurance program guarantees the integrity of later manufactured units.

The static test procedure specifies that the enclosure be internally pressurized to a pressure no less than the design pressure, with the pressure maintained for a minimum of 10 seconds. Following the pressure hold, the pressure is removed and the pressurizing agent removed from the enclosure.

Acceptable performance criteria are provided in this final rule. Acceptable performance is achieved if the enclosure, during pressurization, does not exhibit leakage through welds or casting or rupture of any part that affects the explosion-proof integrity of the enclosure. Further, the enclosure, following removal of the pressurizing agents, must not exhibit visible cracks in welds, permanent deformation exceeding 0.040 inches per linear foot, or excessive clearances along flame-arresting paths following retightening of fastenings, as necessary. Any of the above conditions would constitute unacceptable performance.

There were no comments on this paragraph. However, the final rule is modified to clearly state the type and nature of quality assurance inspections that qualify as an MSHA accepted quality assurance procedure.

Part 75 Mandatory Safety Standards—Underground Coal Mines

The final rule revises existing standard § 75.1002—*Location of trolley wires, trolley feeder wires, high-voltage cables and transformers,* and adds §§ 75.813 through 75.822 to set out additional safety precautions that allow the use of available technology. These new safety precautions address the use of high-voltage longwall equipment in face (production) areas. As stated earlier, MSHA previously included these safety precautions in petitions granted for § 75.1002. Based on its experience with petitions for modification, the agency expects the final rule to improve safety for underground coal mining.

Under the final rule, the risk of injury related to lifting and handling of cables should be reduced since the use of high-voltage cables can reduce the weight and size of a cable used in longwall face systems.

The final rule also provides the following protection against fire, explosions, and/or shock hazards:

(1) Improved short-circuit and ground fault protection;

(2) A means to easily test the effectiveness of ground fault protection;

(3) Use of manufactured cable support systems for cables extending from the power center to the headgate;

(4) Use of insulated cable-handling equipment;

(5) Use of protective gloves to troubleshoot and test low- and medium-voltage circuits associated with high-voltage circuits;

(6) Use of additional protection for cables at points where cables leave support systems;

(7) Use of more improved ''quick handle'' disconnect devices for the purpose of performing work; and

(8) The use of barriers and interlock switches to help guard against contact

with energized circuits. The final rule requires the use of cables containing metallic shielding (SHD) around each power conductor.

Many of these final rule safety improvements are required conditions for granted modifications of § 75.1002. However the final rule, like the proposed rule, provides two additional requirements. These are gloves for troubleshooting and testing, and test circuits for ground-fault protection.

The final rule, in response to commenters' suggestions, also provides two provisions not included in the proposed rule, §§ 75.814(e) and 75.822. Section 75.814(e) requires a single circuit interrupting device for cables connected in parallel or permits parallel circuits-interrupting devices to protect parallel cables when the parallel circuit-interrupting devices are electrically and mechanically interlocked. Section 75.822 allows the use of No. 16 AWG ground-monitor conductors. These additional provisions are a logical outgrowth of the proposed rule and notice and comment process, reflecting the primary purpose of the proposed rule by allowing the use of high voltage on longwalls in a safe and efficient manner. The new provisions are in response to specific joint industry and labor comments received about parallel circuit use, and industry comments about the size of ground-check conductors. These additional provisions permit the use of high-voltage longwall systems that are safe, effective and efficient and reflect the mining community's experience with granted modifications. The ground-monitor conductor size and the multiple parallel circuit provisions are not requirements but are offered to give flexibility to mine operators to use available technology and to minimize cost burdens where feasible.

Section 75.814(e) of the final rule requires that multiple (parallel) circuits be protected by a single circuit-interrupting device rather than parallel connected circuit-interrupting devices, except when parallel devices are mechanically and electrically interlocked. This requirement is based on MSHA electrical safety experience, and experience in granting high-voltage longwall petitions for modification, and is consistent with requirements under nationally recognized consensus standards. Although multiple parallel circuits are not necessary for safe high-voltage longwall systems, they do present certain safety and cost efficiency advantages to some longwall high-voltage systems as demonstrated under MSHA's and the mining industry's petition experience. Higher currents can be used without increasing voltage levels which helps minimize cable over-heating and reduces cable insulation deterioration. Multiple parallel circuits in these systems are a logical option that resulted from this high-voltage longwall petition experience. As noted above, industry and labor suggested multiple parallel circuit use during the rulemaking comment process.

Section 75.822 allows the use of high-voltage longwall cables with a minimum No. 16 AWG center ground-monitor conductor. This provision eliminates the need for petitions for modification of § 75.804(a). It allows the use of improved high-voltage cable designs that provide increased protection against fire and shock hazards. It reduces inter-machine arcing from induced currents which can result in an ignition hazard. The cable designs were initially developed for high-voltage longwall equipment under previously granted petitions.

The cable design requirements were also requested by labor and industry during the comment period of the proposed rule. Since 1992, under MSHA-approved petitions, these cable designs have been safely used.

These new requirements not only permit multiple parallel cable use and the use of No. 16 AWG ground-monitor conductors but also minimize industry paperwork requirements. With this new technology, the final rule results in improved safety and savings for both the mining community and MSHA. Cable replacement and maintenance costs will be reduced. Also, mine operators will not need to file petitions for modification; therefore, costs associated with the petition process will be eliminated. Legal costs are incurred by all segments of the mining community in the administrative review process associated with petitions. Agency costs associated with publication, processing, investigation and review of high-voltage longwall petitions will also be eliminated.

The final rule increases safety protections and does not reduce the protections currently afforded miners.

Section 75.2 Definitions

The definitions in this section are key to proper interpretation of the electrical standards. Upon review, the Agency concluded that these definitions should also be used to describe these terms wherever they appear in 30 CFR part 75 and proposed such an approach. This approach will provide clarity and consistency in the use of these terms where they appear in all underground safety standards. All underground coal mine operators and miners representatives were sent copies of these proposed definitions as part of the complete longwall high-voltage proposed rule. There were no comments opposing this approach.

The definitions are derived from consensus standards, including the Institute of Electronic and Electrical Engineers, *The New Standards Dictionary of Electrical and Electronics Terms—Standard 100–1992, and the National Electrical Code (NEC).* Definitions found in 30 CFR part 18 of MSHA's regulations were also used as a source for this final rule. In some instances, definitions taken from these sources were changed to apply to electric circuits and equipment used in the coal mining industry.

MSHA proposed that the term ''adequate interrupting capacity'' be defined as the ability of an electrical protective device to safely interrupt all values of current which can occur at its location in excess of its trip setting or melting point. A commenter suggested that this term be defined as the ability of an electrical protective device, based upon its required and intended application, to safely interrupt values of current in excess of its trip setting or melting point. MSHA agrees and has changed the proposed definition to reflect this suggestion. This commenter suggested that the proposed definition would cause a problem, since in motor-starter enclosures of the type presently used for high-voltage longwalls, short-circuit protection is provided by a single circuit breaker common to all motor circuits, whereas overload, ground fault, and ground-monitor protection trips individual motor contactors. According to this commenter, this could result in the interruption of the intended protected circuits at a higher current value than was intended or required for that circuit, therefore, affording less protection against overheating, shock and fire hazards. The commenter further suggested that in applying the revised definition, the short-circuit relay signals the circuit breaker to interrupt the short-circuit current, whereas the ground-fault relay signals the contactor to interrupt the restricted ground-fault current. Under the final rule, adequate interrupting capacity is determined by comparing the interrupting rating of the device with the actual characteristics of the circuit to be protected. Thus, interruption of the circuit occurs at the current rating required or intended for that circuit rather than all values of current which can occur at its location.

The final rule defines ''approval documentation'' to mean formal papers issued by the Mine Safety and Health Administration which illustrate and

describe the complete assembly of electrical machinery or accessories that have complied with the applicable approval requirements of 30 CFR part 18. The rule retains the meaning of the proposed rule but, for clarification purposes, replaces ''formal document'' with the words ''formal papers'' and the verb ''document'' with the words ''describe and illustrate''. The proposed language was also changed to accurately reflect that ''approval documentation'' refers to those papers that illustrate and describe equipment meeting the ''applicable requirements of 30 CFR part 18.'' This change clarifies that approval documentation must be submitted under part 18. MSHA received no comments in regard to this definition.

Like the proposed rule, the final rule defines ''circuit-interrupting device'' as a device designed to open and close a circuit by nonautomatic means and to open the circuit automatically at a predetermined overcurrent value without damage to the device when operated within its rating. The Agency received no comments on this definition and it is unchanged from the proposed rule. This definition clarifies that circuit-interrupting devices be designed for manual closure rather than automatic, to protect against safety hazards which could result in severe bodily injury and death if unexpected automatic energization of equipment were to occur. Conversely, the device must be capable of opening the circuit automatically upon the occurrence of an electrical fault. The rating of the device must be at a value that would protect the device from damage during the automatic deenergization of the circuit.

''Ground fault or grounded phase'' is defined to mean an unintentional connection between an electric circuit and the grounding system. MSHA received no comments on this definition and it remains unchanged from the proposed rule.

Like the proposed rule, the final rule defines ''motor-starter enclosure'' to mean an enclosure containing motor starting circuits and equipment. This term describes equipment commonly used to house longwall motor-starting equipment. No comments were received on this definition and it remains unchanged.

Also like the proposed rule, the final rule defines ''nominal voltage'' to mean the phase-to-phase or line-to-line root-mean-square value assigned to a circuit or system to conveniently designate its voltage class, such as 480 or 4,160 volts. The definition clarifies that the actual operating voltage of a system or circuit may vary from its nominal voltage within a range that permits satisfactory operation of equipment. The Agency received no comments on this definition and it has not been changed.

The final rule, like the proposed rule, defines ''short circuit'' to mean an abnormal connection of relatively low impedance, whether made accidentally or intentionally, between two points of different potential. There were no comments on this definition so it remains unchanged.

Definitions of low voltage, medium voltage, and high voltage were inadvertently included in the proposed rule. No comments were received on these definitions. These terms are defined in existing rules and are not addressed in this final rule.

One commenter suggested that ''cable handling and support system'', a phrase used frequently in § 75.817—*Cable handling and support systems,* should be defined. Section 75.817 contains the performance goals that cable handling and support systems must achieve, by minimizing the possibility of miners coming into contact with cables and protecting the high-voltage cables from damage. The Agency does not believe that a definition is necessary for this term. Specifically defining a cable handling and support system would limit operator flexibility with respect to cable handling and support systems that may be designed in the future and provide equal or greater safety protection. Cable handling and support systems are understood by the plain meaning of the words.

Section 75.813 High-Voltage Longwalls; Scope

Section 75.813 describes the scope of this final rule; it identifies new §§ 75.814 through 75.822 as electrical standards that apply only to the use of high-voltage longwall circuits and equipment. The final rule, unlike the proposed rule, expands the scope to include new § 75.822. As explained below, § 75.822 is included in the final rule in response to a comment regarding the size of ground-monitor conductors in cables. This provision also eliminates the need for petitions for modification related to ground-monitor conductor size. This section also clarifies that all other existing standards in 30 CFR that are applicable to the use of high-voltage longwall circuits and equipment continue to apply. For example, safety standards, such as grounding and ground-monitor requirements contained in subparts H and I of part 75 that are currently applicable to high-voltage installations are also applicable to high-voltage longwall equipment.

Some commenters suggested that an exception should be made in the standard for shearing machines that have been previously evaluated by MSHA under part 18, using non-high-voltage criteria. However, such an exemption would exclude shearing machines from the general safety requirements contained in the final rule. Safety requirements pertaining to electrical work, such as troubleshooting and testing, and installation, examination and maintenance, contain provisions that apply to all equipment on the high-voltage longwall, including shearing machines. Other provisions relating to disconnect devices and cable handling and support systems are applicable to the equipment they address. Therefore, the Agency does not believe that a general exemption for shearing machines would promote safety.

Section 75.814 Electrical Protection

This section of the final rule is derived in part from existing §§ 75.518–1—*Electric equipment and circuits; overload and short circuit protection; minimum requirements*, 75.800—*High-voltage circuits; circuit breakers*, and 75.800–2—*Approved circuit schemes* and addresses electrical protection methods for longwall equipment supplied by high-voltage systems. The effects of ground faults, electrical arcing, heating of conductors, and short circuits can have adverse consequences to the safety of miners. Effective electrical protection for longwall equipment will reduce the potential for ignitions, fires, and miner exposure to energized equipment frames. The final rule incorporates the latest technology and provides increased worker protection for high-voltage longwall mining equipment.

Paragraph (a) of the final rule addresses requirements for short-circuit, overload, ground fault, and undervoltage protection for high-voltage cables extending from the section power center, the shearer motor cable(s), and the remaining motor cables. Short-circuit and overload protection prevent damage to cables and motors due to overheating. Ground-fault protection minimizes the risk of shock injuries and ignition hazards to miners. Under-voltage protective devices prevent automatic restarting of equipment following a loss of power.

The final rule also requires circuit-interrupting devices for high-voltage circuits that supply power to longwall equipment be properly rated to safely interrupt the current to which it may be exposed without damage. The adequacy of the circuit-interrupting device assures that the device will remain undamaged by overcurrents and faults in the system.

One commenter requested clarification regarding whether vacuum contactors can be used to provide ground-fault and overload protection since some have been approved for use on longwall controllers. Vacuum contactors are a vacuum sealed system as opposed to a circuit breaker, which interrupts the arc in air or oil. The final rule permits the use of vacuum contactors as long as these contactors meet the definition of a ''circuit-interrupting device.''

Some commenters submitted sketches of high-voltage longwall circuits, and requested an evaluation of whether the circuits would comply with the standard. It is beyond the scope of this rulemaking for MSHA to evaluate and approve such submissions. Systems and wiring designs can vary from mine to mine and from section to section within the same mine, depending on factors such as control circuit configuration, load terminations, and available fault current. MSHA will evaluate these designs on a case-by-case basis as mine operators plan to implement high-voltage longwalls at their mines and during the approval process under the applicable 30 CFR part 18 provisions.

Paragraph (a)(1) of the final rule, like the proposed rule, specifies a current setting for short-circuit protective devices. The devices, whether located in the section power center or the longwall motor-starter enclosure, are required to be set at the lower value of either the setting specified in the approval documentation pertaining to the longwall system, or 75 percent of the minimum available phase-to-phase short-circuit current. The short-circuit current settings specified during MSHA's approval process are based on the calculation of fault currents at various key locations in the system.

The results of a 1992 Agency study of fault current levels in 30 high-voltage longwall systems indicate that phase-to-phase short-circuit currents range between 1,500 and 9,000 amperes at the various motor locations. (A copy of this study is available as part of the record.) Therefore, current (ampere) settings of 75 percent of the minimum phase-to-phase short-circuit currents will establish maximum limits for trip settings of short-circuit current devices. As equipment is used and moved from one location to another in a mine, changes take place in both the equipment and electrical system that indicate a need for a change in settings for short-circuit protective devices. Some commenters suggested that a statement be added to this provision indicating that the minimum available short-circuit current be determined by calculations and not by actual in-mine short-circuit tests.

To date, it has not been necessary to conduct in-mine testing for the purpose of making determinations of proper settings of short-circuit protective devices. However, the method used to make these determinations should not be restricted to calculations, since unusual or unanticipated conditions, such as high motor starting currents, may require in-mine testing.

Paragraph (a)(2) of the final rule specifies short-circuit time delay settings for protective devices. Short-circuit devices protecting cables extending from section power centers to motor-starter enclosures may incorporate time delays limited to the settings specified in the approval documentation or 0.25-second, whichever is less. This paragraph revises the proposed rule to allow short-circuit devices protecting motor or shearer circuits to incorporate intentional time delays. The time delays may be limited to the settings specified in the approval documentation, or up to three cycles (0.050-seconds), whichever is less. The purpose of permitting a time delay is to prevent nuisance tripping during motor starting. When high-voltage longwall equipment was introduced to the mining industry, nuisance tripping problems were experienced. This nuisance tripping was caused by motor starting currents. In order to solve these problems, it may be necessary to incorporate time delays into the short-circuit protective devices. Currently, electronic relays that have a time delay to override motor starting currents are commonly used to provide short-circuit protection for high-voltage longwall circuits.

The proposed rule allowed time delays for short-circuit devices protecting cables extending from power centers to motor-starter enclosures. The maximum value of the time delay was limited to the smaller of the value specified in the approval documentation or 0.25-second (15 cycles). However, the proposed rule did not provide for time delays to be incorporated into short-circuit devices protecting motor or shearer cables. The Agency specifically solicited comments regarding elimination of intentional time delays and allowing higher short-circuit settings based on system capacity.

One commenter stated that time delays between the longwall controller and section power center should be required to permit adequate coordination with downstream devices. According to the commenter, if there is a failure in the utilization circuit, for example, the crusher motor, it is advantageous for the failure to be cleared by the circuit-interrupting device in the controller, not the section power center which acts as a back-up. This commenter further stated:

(1) Without the presently permitted time delays, the fault would also deenergize the transformer, and more than likely, personnel would reenergize the circuitry to find the location of the fault in the system;

(2) This unnecessary closing in on a faulted circuit is eliminated when the circuits are properly coordinated; and

(3) Time delays should be kept as short as possible to provide adequate coordination.

Other commenters suggested that time delays be eliminated and higher short-circuit settings be allowed based on system capacity, provided that the Agency develops test scenarios to determine the safe time delay settings. These commenters stated that elimination of time delays would offer protection in the event of a direct fault because there would not be resistor strips (overloads) available to open the circuit and remove the power. They stated that inspections have revealed that, in some cases, resistor strips are either not operable, damaged, or have been by-passed.

After careful review of this issue, the Agency has concluded that the use of time delays and subsequent lower short-circuit settings would result in coordination (selective tripping) of circuit-interrupting devices. Proper coordination of circuit-interrupting devices can result in improved safety since faulted circuits can be more easily and safely identified and isolated for the purpose of troubleshooting, testing, and repair work. Commenters also suggested that time delay settings of short-circuit protective devices used to protect any cable extending from the section power center to a motor-starter enclosure not exceed the settings specified in approval documentation or 0.30-second (18-cycles), whichever is less.

This provision is not changed from the proposed rule. MSHA's experience has been that the maximum time delay for reliable coordination is 0.25-second (15-cycles). Further, a joint standard published by the American National Standards Institute (ANSI) and the Institute of Electrical and Electronics Engineers, Inc., entitled *IEEE Recommended Practice for Protection and Coordination of Industrial and Commercial Power Systems (IEEE Buff Book)—Standard 242–1986,* allows 0.25-second time-delay to ensure reliable coordination of short-circuit protective devices. Therefore, an increase to 0.30-second is not justified.

These commenters further suggested that short-circuit protective device settings, used to protect motor and shearer circuits, should be based on the maximum asymmetrical starting current with no intentional time delay or be based on the maximum symmetrical starting current with a time delay of no more than 0.050-second (three-cycles). These commenters pointed out that modern electronic short-circuit protective devices can be made to operate within one cycle (0.017-second). These devices will respond while the motor or shearing machine starting current contains an appreciable asymmetrical component and the asymmetrical component of the motor or shearing machine starting current will be negligible near 0.050-second. They suggested that introducing a 0.050-second time delay will permit a significant reduction in the setting of the short-circuit protective devices. Another commenter suggested that it is important to recognize the difference between asymmetrical motor starting currents that persist for two (0.033-second) to three cycles (0.050-second) following contactor closure, and motor starting currents that persist for several seconds. This commenter pointed out a need for two cycles time delay. MSHA agrees that there is a difference between asymmetrical motor starting currents and symmetrical motor starting currents which can last for several seconds.

Therefore, the final rule permits limited time delays to be used in conjunction with lower settings of short-circuit protective devices rather than higher settings of short-circuit protective devices without time delays. This should result in proper coordination and subsequent selective tripping of circuit-interrupting devices and prevent nuisance tripping of circuit-interrupting devices due to high motor starting currents. In response to comments, the Agency concludes that a time delay will be necessary to allow proper starting of motors. Therefore, this provision allows short-circuit devices protecting motor or shearer circuits to incorporate intentional time delays limited to the settings specified in the approval documentation, or up to three cycles (0.050-seconds), whichever is less.

Paragraph (a)(3) of the final rule, like the proposed rule, requires ground-fault currents to be limited by a neutral grounding resistor to not more than 6.5 amperes when the nominal voltage of the power circuit is 2,400 volts or less, or 3.75 amperes when the power circuit voltage is greater than 2,400 volts. Typically, the mining industry has used grounding resistors in resistance-grounded systems that limit the ground-fault current in a circuit to 0.50 to 1.00 ampere. MSHA encourages this practice to continue. The levels specified in the final rule allow new technology to detect lower ground-fault currents and reduces shock hazards. During ground-fault conditions, the grounding resistor will dissipate heat. The final rule limits the heat dissipation by the grounding resistors to a value equivalent to the heat dissipated by grounding resistors that have been in service for numerous years on medium-voltage longwall systems. The specified values prevent grounding resistor enclosures from overheating and becoming ignition or fire sources. There were no comments on this provision and therefore it remains as stated in the proposed rule.

Paragraph (a)(4)(i) of the final rule, like the proposed rule, requires high-voltage circuits extending from the section power center to have ground-fault protection set at not more than 40 percent of the current rating of the neutral grounding resistor. These protective devices assure that circuits extending from the section power source will be quickly deenergized when they are subjected to ground faults. The final rule uses the current ratings for grounding resistors, specified in paragraph (a)(3), as a basis for setting ground-fault devices. For example, if a 6.50 ampere grounding resistor is used, the ground-fault device must operate to deenergize the circuit at 2.60 amperes (40 percent) or less. If a 0.50-ampere grounding resistor is used, the ground-fault device must operate to deenergize the circuit at 200 milliamperes or less. The 40 percent trip level provides a safety factor to assure that unexpected lower levels of ground-fault current would be detected and cause the circuit-interrupting device to open. This value also allows proper trip coordination with other protective devices. There were no comments on this section of the rule and the final rule adopts the language used in the proposed rule.

Paragraph (a)(4)(ii) of the final rule, like the proposed rule, requires backup ground-fault protection to detect an open grounding resistor. The ground-fault protective device can be a combination of a potential transformer and voltage relay, or another device(s) capable of detecting an open neutral resistor. Once an open neutral resistor is detected, the ground-fault protective device must cause the circuits extending from the power center to be deenergized. There were no comments on this section of the rule and it remains as stated in the proposed rule.

Paragraph (a)(4)(iii) of the final rule requires thermal protection for the high-voltage neutral grounding resistor, which opens the ground-check circuit for the high-voltage circuit supplying the section power center, if the grounding resistor is subjected to a sustained ground-fault current. The overtemperature rating or setting must be 50 percent of the maximum temperature rise of the grounding resistor or 150°C (302° F), whichever is less. The final rule is changed from the proposed rule to also allow the use of a current transformer, and a thermal overcurrent relay to provide the required thermal protection. The final rule uses the term ''thermal protection'' rather than ''overtemperature protection'' to permit current transformers and thermal relays or other devices such as thermostats that react to overtemperature. This change allows new technology developed by the mining industry during the last seven years.

A commenter questioned the need for these devices. In response, grounding resistors generate heat when subjected to sustained ground-faults. An overtemperature device causes interruption of the high-voltage circuit supplying the section power center by opening the ground-wire monitor circuit before extreme heat destroys the grounding resistor function. Failure of the resistor leaves the circuit unprotected against ground-faults and increases the possibility of fire and shock hazards. The commenter also requested a six-month delay in implementing this provision to allow mine operators to acquire high quality devices. It is MSHA's view that since these devices have been required to be installed on high-voltage longwall mining systems for at least the past seven years under petitions granted for § 75.1002, the devices should be readily available for use. A six month delay is not necessary.

Another commenter wanted the maximum temperature for the overtemperature device to be set at 150° C. This setting was incorporated into the 1992 proposed rule. Some commenters suggested that overtemperature protection should remove power from the power center transformer if the grounding resistor is subjected to a sustained ground fault. These commenters pointed out the following:

(1) Many power centers are equipped with an incoming high-voltage circuit breaker to provide protection for the transformer;

(2) The overtemperature protection for the grounding resistor could cause this circuit breaker to open in the event of a sustained fault; and

(3) This would remove the ground fault and make troubleshooting more convenient.

MSHA agrees that the use of an incoming high-voltage circuit breaker may be an acceptable device for removing power from the section power center when the overtemperature device is activated. However, activation of the grounding resistor overtemperature protection could be an indication of serious problems in the tripping circuits for the circuit-interrupting device(s) located in the power center. This condition warrants complete removal of power from the entire power center until the condition is properly investigated and corrected.

Another commenter stated that experience has shown that the required protection may be best provided by using a current transformer and thermal overcurrent relay rather than a thermostat. The commenter also stated that this type of protection would not be dependent upon control power and would still be able to deenergize the primary of the transformer. MSHA agrees with this comment. The final rule is changed to allow more flexibility in the use of thermal protection. It permits the use of a current transformer and a thermal overcurrent relay to provide required overtemperature protection.

Paragraph (a)(5) of the final rule, like the proposed rule, requires high-voltage motor and shearer circuits to be provided with instantaneous ground-fault protection set at not more than 0.125-ampere. This provides highly sensitive and responsive ground-fault detection systems, using existing technology, for high-voltage circuits supplying electric face equipment. Protective devices are required to operate instantaneously, greatly reducing the likelihood of fires and shock hazards caused by ground faults. Some commenters suggested that the instantaneous ground-fault protection be set at not more than 0.125-ampere if the full-load current of the circuit does not exceed 200 amperes and set at not more than 0.200-ampere if the full-load current of the circuit exceeds 200 amperes. These commenters pointed out that it is very difficult to produce ground-fault current transformers that can reliably discriminate between small ground-fault currents and larger motor starting currents. They further stated that, when the full load current of a circuit exceeds 200 amperes, it is reasonable to expect motor starting currents to exceed 2,000 amperes and that a small increase in the setting of the ground-fault protection is justified for certain high-current circuits. Finally, they stated that a 0.200-ampere setting would still be less than 40 percent of the maximum ground-fault current. Ground-fault devices are used to detect low levels of fault currents during a grounded phase condition. These sensitive devices can be influenced by extremely large values of motor starting current.

MSHA has evaluated these comments and determined that there are sensitive ground-fault protective devices commercially available that have been successfully used to respond to the conditions described by the commenters. These devices can safely and reliably operate at 0.125-amperes or less even on systems having higher motor-starting currents. A large number of existing high-voltage longwall systems use grounding resistors that limit ground-fault currents to 0.500-amperes. Raising the trip value of ground-fault devices protecting motor and shearer cables to 0.200-amperes would also have the device set at 40 percent of the current rating of the grounding resistor. This setting would be the same value as protective devices used on cables extending from power centers to motor-starter enclosures. Proper coordination of these protective devices with upstream devices may not be achievable if the trip setting is raised to 0.200-ampere. For this reason, the provision is unchanged from the proposed rule.

Paragraph (a)(6) of the final rule, like the proposed rule, allows time delay settings, not to exceed 0.25 second (15 cycles), of ground-fault protective devices to provide coordination with the instantaneous ground-fault protection of motor and shearer circuits. This provision limits the time lapses between actuation of the section power center ground-fault protective devices and those located in the motor-starter enclosure. Time delay settings allow coordination and selective tripping of circuit protective devices. This coordination and selective tripping also assures that the entire circuit deenergizes quickly to reduce exposure to shock hazards.

A commenter wanted a time delay of 0.1 second (6 cycles) for ground-fault protection for high-voltage motors. The commenter described situations where nuisance tripping occurred during starting and stopping of the motor and a time delay of 0.1 second would solve the problem. MSHA has evaluated this comment and has determined that technology is available and currently used by industry to alleviate this condition without changing the time delay. Most ground faults occur between the motor-starter enclosure and the motors or shearers. These ground faults must be removed as quickly as possible. Another commenter wanted to add wording to define the total time for ground-fault protection as 0.4 second (24 cycles) maximum for all devices. Most longwall systems now utilize two ground-fault protective devices with a time delay of 0.25 second (15 cycles) which provides adequate time for selective tripping. Thus, the final rule is unchanged from the proposed rule.

Paragraph (a)(7) of the final rule, like the proposed rule, requires an undervoltage protection device that operates on loss of voltage to cause and maintain the interruption of power to a circuit. The rule reduces the likelihood that miners will be pinned or crushed due to the automatic restarting of the equipment. A commenter suggested another means of compliance by using a ''momentary start contactor with a seal in circuit.'' In response, the rule, unchanged from the proposed rule, is performance oriented and permits any undervoltage protection provided by a device that operates on loss of voltage. Therefore, any voltage sensing device, including the method specified by the commenter, that would prevent the automatic reclosing of the circuit protective device as specified in paragraph (a) will meet the requirements of the final rule.

Paragraph (b) of the final rule, like the proposed rule, requires a single window-type current transformer to encircle the three-phase conductors for ground-fault protection. The equipment safety grounding conductors are prohibited from being passed through or connected in series with ground-fault current transformers. This configuration could defeat ground-fault protection and result in hazardous voltage on equipment frames. A single window-type current transformer must be used to provide the ground-fault protection required by paragraph (a)(4)(i) for circuits extending from the section power center to the motor-starter enclosures. It also requires the same type current transformer for ground-fault protection specified in paragraph (a)(5) for:

(1) High-voltage motor circuits extending from the motor-starter enclosures;

(2) The shearer motor circuits extending from the section power center; and

(3) Motor enclosures.

Some commenters suggested this provision should allow for alternative components if they provide equivalent or improved protection. MSHA, however, is unaware of any alternative device that provides equivalent

protection and the commenter did not specify any equivalent devices. The use of a single window-type current transformer to encircle only the three phase conductors assures that sensitive ground-fault devices will be able to detect all ground faults exceeding the setting of the device. Detection devices inserted in the ground wire may not detect all ground-fault currents and could compromise the integrity of the ground circuit. Therefore, paragraph (b) of this section remains as proposed.

Paragraph (c) of the final rule requires a ground-fault test circuit for each ground-fault current device. This test circuit must inject a current of 50 percent or less of the current rating of the grounding resistor to verify that a ground-fault condition causes the corresponding circuit-interrupting device to open. This testing procedure helps determine if ground-fault current devices function at required current levels. It will also test the sensitivity of each device to ground-fault currents. The proposed rule required each ground-fault current device to be provided with a test circuit that would inject a current of 50 percent or less of the current rating of the grounding resistor and cause each corresponding circuit-interrupting device to open. Some commenters suggested that this requirement be limited to ground-fault circuit devices required by paragraphs (a)(4)(i) and (a)(5) of this section. These commenters also suggested that the ground-fault test circuit inject a primary current into the current transformer that does not subject the equipment to an actual phase-to-ground fault. They pointed out that primary current injection tests of the ground-fault devices are safe and effective tests for those devices. They further stated that testing of the backup ground-fault devices located across the grounding resistor, such as the potential transformer and overtemperature relay, would require application of an actual phase-to-ground fault and could be hazardous to both personnel and equipment. MSHA agrees with the commenters that this method of testing is considered to be safe and effective in determining whether a device trips at its setting. In response to these comments, the final rule modifies the proposed rule, to require each ground-fault current device required by paragraphs (a)(4)(i) and (a)(5) to have a test circuit that passes a primary current of 50 percent or less of the maximum ground-fault current through the current transformer and cause the corresponding circuit-interrupting device to open.

Paragraph (d) of § 75.814, like the proposed rule, prohibits the use of circuit-interrupting devices that automatically reclose. Automatic reclosure of the circuit-interrupting device allows immediate reenergization of a circuit that has sustained a fault. Faults occur in underground electrical systems as a result of damage from roof falls or equipment insulation failure. Under such circumstances, the use of automatic reclosing circuit-interrupting devices could create shock and fire hazards when a short-circuit or ground-fault condition exists in the circuit. There were no comments on this paragraph and it remains as proposed.

The final rule includes an additional paragraph (e) that is partially derived from § 75.518–1—*Electric equipment and circuits; overload and short circuit protection; minimum requirements.* This was suggested by joint commenters from industry and labor to address concerns regarding the use of cables in parallel. The commenters suggested that when two or more cables are used to supply power to a common connection point (bus), each cable be provided with ground-wire monitoring so that all cables are deenergized when the grounding conductor becomes severed or open. In support of this suggestion, the commenters noted that when two or more cables are connected in parallel, shock hazards will exist if one cable has been disconnected and the other cable is left energized. MSHA agrees. The Agency has been incorporating this additional requirement into petitions for modification of § 75.1002 during the last four years. The final rule requirement that parallel power cables be installed with ground-wire monitor systems addresses this concern. Ground-wire monitoring in power cables has been an inherent part of the developing high-voltage longwall technology over the last 16 years. In addition, under the final rule, parallel circuits installed after the effective date of this rule must be protected by a single circuit-interrupting device rather than have circuit-interrupting devices operating in parallel unless such devices are mechanically and electrically interlocked. This is supported by the fact that 30 CFR § 75.518–1 requires overcurrent devices to conform to the provisions of the National Electric Code which prohibits parallel connections of circuit-interrupting devices.

Section 75.815 Disconnect Devices

Section 75.815 of the final rule includes requirements pertaining to disconnecting devices located in longwall power centers and in longwall equipment motor controllers that provide a safe means of disconnecting power during the performance of electrical work. It includes design and performance requirements pertaining to electrical ratings, lockout, grounding, and maintenance requirements pertaining to compliance with part 18 of Title 30 CFR. This section was derived, in part, from existing §§ 75.511, 75.520, 75.601, 75.705, and 75.808.

Paragraph (a) as in the proposed rule, requires a disconnecting device in addition to the circuit-interrupting device (required by § 75.814) in the power center that supplies power to longwall equipment. This disconnecting device provides visual evidence that the circuit is deenergized. Either a disconnecting switch or cable coupler would suffice to satisfy this requirement. Disconnecting devices in power centers facilitate the deenergization process prior to performance of electrical work. Figures I–1 and I–2 in Appendix A provide guidance for compliance with this requirement. The Agency did not receive any comments on this provision and it is unchanged from the proposed rule.

Paragraph (b) of the final rule, like the proposed rule, establishes maintenance requirements for disconnecting devices in motor-starter enclosures. Section 75.815(b) requires that disconnect devices be maintained in accordance with the approval requirements of paragraph (f) of § 18.53—*High-voltage longwall mining systems.* Section 18.53(f) requires that the load-side power conductors be grounded when the disconnecting device is open. This provision guards against the occurrence of electrical accidents by requiring the circuit disconnect device to ground the disconnected circuit before work is performed on the circuit. The final rule assures that a properly maintained safe means of deenergizing longwall circuits and equipment is readily available for use during routine operation or in the event of an emergency. Additionally, the final rule provides for safe deenergization of high-voltage circuits in the motor-starter enclosure, or equipment supplied power through the enclosure during testing and troubleshooting work. MSHA encourages mine operators to continue using additional disconnecting devices that are already installed in many existing longwall systems.

Paragraph (b) requires a caution label on the cover of each starter enclosure compartment containing the main disconnecting device. This caution label must warn miners against entering the compartment before deenergizing the incoming high-voltage circuits to the

compartment. It warns miners that the line side of the disconnect device may be energized when the device is opened and cautions them to deenergize incoming power before removing any covers. It also helps to assure that miners deenergize power to starter enclosures before removing any of the covers. There were no comments received on this provision so the final rule is unchanged from the proposed rule. MSHA recognizes that the mining industry has taken safeguards by using additional caution labels to warn miners of stored energy devices (capacitors). We encourage the industry to continue the safety practice of using caution statements that warn miners to ground the capacitors before performing work on electric circuits.

Paragraph (c) of the final rule, like the proposed rule, requires disconnecting devices to have voltage and current ratings compatible with the circuits in which they are used. This requirement ensures safe operation of these devices during normal use. The Agency received no comments on this provision. It remains the same as the proposed rule.

Paragraph (d)(1) of the final rule, like the proposed rule, requires that disconnecting devices be designed to provide visual evidence that all ungrounded power conductors are disconnected when the device is open. Visual evidence means the ability to observe the physical separation of the control and power conductors without removing any covers. There were no comments received on this provision and no changes were made to the proposed rule.

Paragraph (d)(2) of the final rule, like the proposed rule, requires that disconnecting devices be equipped to ground all power conductors when the device is ''open''. This requirement allows the circuit to be properly grounded before any work is performed on the electric circuits or equipment. It also allows discharging of any existing voltage due to capacitance between the power conductors and ground. The Agency did not receive any comments on this provision. It remains unchanged from the proposed rule.

Paragraph (d)(3) is unchanged from the proposed rule. It requires each device be equipped to lock the device in the open position. This ensures that the circuit being worked on remains deenergized until work is completed. There were no comments received in response to this provision.

Paragraph (e) of the final rule, like the proposed rule, requires that disconnecting devices, except those installed in explosion-proof enclosures, be capable of interrupting load currents without creating hazardous conditions. If the device is not designed for full load interruption, the device must be installed so that a circuit-interrupting device will deenergize the incoming power circuit before the disconnecting device opens. Use of improperly rated devices could result in the destruction of the device and injuries to miners due to flash burns or flying parts. The final rule further requires that disconnecting devices installed in explosion-proof enclosures be maintained in accordance with the approval requirements of § 18.53(f)(2)(iv) of part 18. This provision specifies that disconnecting devices be designed and installed to cause the current to be interrupted automatically prior to the opening of the contacts of the device. The Agency did not receive any comments on this provision so it remains the same as the proposed rule.

Some commenters suggested that a new paragraph (f) be added to require that any additional disconnecting devices used to deenergize a portion of the longwall equipment meet the requirements of paragraphs (c), (d), and (e). They stated that it is often necessary to maintain power on part of the longwall equipment in order to safely and efficiently perform electrical work on another part of the equipment. For example, they stated that a disconnecting device for the shearing machine circuit will permit electrical work on a deenergized shearing machine while maintaining power on the rest of the longwall. Under the final rule, individual disconnecting devices, such as cable couplers, may be used to isolate individual pieces of equipment for the purpose of performing maintenance. The final rule requires that all additional disconnecting devices satisfy the requirements of paragraphs c, d, and e. Therefore, the Agency believes that an additional provision is not necessary.

Section 75.816 Guarding of Cables

This rule is derived in part from existing § 75.807—*Installation of high-voltage transmission cables* and addresses guarding of high-voltage cables supplying longwall equipment. Until this rule, § 75.807 related to high-voltage cables in areas not in by the last open crosscut or not within 150 feet from the pillar workings. In addition to the § 75.807 requirements, § 75.816 of this final rule requires guarding of high-voltage cables where persons regularly work or travel over or under the cables and where the cables leave cable handling or support systems in the longwall face areas or are within 150 feet of the pillar workings. As provided in § 75.807, cables installed six and one half feet or more above the mine floor satisfy these requirements by location. Guarding minimizes the possibility of miners inadvertently contacting the cables. Also, cable guarding must consist of grounded metal or nonconductive flame-resistant material. High-voltage cables used to supply longwall equipment could present shock and fire hazards if the cables are damaged or defective.

Paragraph (a)(1) of the final rule, like the proposed rule, requires that cables be guarded where persons regularly work or travel over or under the cables. This minimizes accidental contact with cables. There were no comments received on this provision and it is unchanged from the proposed rule.

Paragraph (a)(2) of the final rule, like the proposed rule, requires guarding where the cables leave cable handling or support systems to extend to electric components. This provision prevents physical damage from stress and flexing that might cause shock and fire hazards. The Agency did not receive any comments on this provision and it remains the same as in the proposed rule.

Paragraph (b) of the final rule requires guarding of high-voltage cables to minimize the possibility of inadvertent contact with cables and to protect high-voltage cables from physical damage. Guarding must be constructed of grounded metal or nonconductive flame-resistant material. This standard provides minimum requirements for the physical and electrical protective characteristics of the guarding. The proposed rule required that guarding prevent miners from contacting high-voltage cables.

One commenter suggested that the provision specifically permit the use of either continuous guarding or overlapping sections of guarding. According to this commenter, overlapping sections of guarding achieve the safety goal of the provision and would reduce time-consuming and expensive repairs that could involve thousands of feet of cable to repair a small section. In response to this comment, the rule specifies the locations where cables are required to be guarded. Under the rule, the guarding material must cover the cables and continuous or overlapping guarding may be used. When joining sections of metal guarding, steps should be taken to assure proper grounding.

Other commenters suggested that this section require that guarding ''minimize'' rather than ''prevent'' the possibility of miners contacting the cables. They stated that it is not

practical to design guarding that would prevent miners from contacting the cables. This often occurs when miners are attempting to guide or train cable into its holding trough when it is loose or falls out. They suggested it is possible to design guarding that would ''minimize'' contact or ''block access'' to the cable. MSHA agrees with this commenter and modified the proposed rule. In response to these comments, this revised provision, requires a physical barrier consisting of guarding material between the cables and miners to minimize inadvertent contact with the cables, and requires mechanical protection for the cables. Also, § 75.818 of the final rule prohibits intentional contact with cables except for the purpose of training (guiding) motor and shearer cables with the use of proper protective equipment.

Section 75.817 Cable Support Systems

This section of the rule addresses handling and support systems of high-voltage cables suppling longwall equipment. Under the final rule, longwall mining systems must be equipped with cable handling and support systems that are constructed, installed, and maintained to protect high-voltage cables from damage and to minimize the possibility of miners inadvertently contacting the cables. Under the proposed rule, these systems were required to prevent miners from contacting high-voltage cables. High-voltage cables used to supply longwall equipment can present shock and fire hazards if the cables become damaged or defective. This section of the final rule provides the necessary protection to cables and miners by minimizing exposure to damaged or defective cables. This section is derived, in part, from existing requirements in § 75.807 and addresses new systems developed by the mining industry to mechanically handle and support cables. These systems are presently used on high-voltage longwall mining systems to minimize damage to the cables.

One commenter suggested that a provision be added to this section that allows the installation of guarded high-voltage cables in cable handling and support systems where hydraulic hoses and low- and medium-voltage cables are also installed. In response to this comment, high-voltage longwall equipment and associated cables are currently required by existing § 18.36(b)—*Cables between machine components* to be isolated from hydraulic lines. Also, existing § 75.807 currently requires that the high-voltage cables be placed in a manner to prevent contact with other low-voltage circuits. Isolation and placement help guard against fire and assures protection of electric cables, which could be damaged, if hydraulic lines are ruptured or conductor insulation fails. Based on MSHA experience, acceptable methods which meet § 18.36(b) requirements will be determined during the part 18 approval process. Guarding of cables by proper isolation and placement is an acceptable method to meet this requirement.

Other commenters suggested that the wording of the rule be changed to ''longwall mining equipment shall be provided with cable handling and support systems that are constructed, installed, and maintained to minimize the possibility of miners contacting the cables and to protect the high-voltage cables from damage.'' We agree with the commenters as stated in the previous discussion of § 75.816. The final rule requires that cable support systems minimize the possibility of inadvertent contact instead of preventing contact.

Section 75.818 Use of Insulated Cable Handling Equipment

This section of the final rule addresses the types of personal protective equipment that may be used when it is necessary to handle high-voltage longwall cables, the examination for defects or damage prior to use, and the intervals at which high-voltage protective equipment must be tested. Its purpose is to provide protection against electric shock hazards associated with the handling of energized high-voltage longwall cables. This section is derived, in part, from existing requirements in §§ 75.705–6—*Protective clothing; use and inspection,* 75.705–8—*Protective equipment; testing and storage* and 75.812—*Movement of high-voltage power centers and portable transformers; permit.*

Paragraph (a) of the final rule, like the proposed rule, requires that personal protective equipment be used when training or guiding, by hand, a high-voltage longwall cable into the cable handling trough when the cable inadvertently comes out. Commenters suggested that the list of protective equipment be expanded to include facial protection and protective clothing, and that the protective equipment also be capable of providing protection from a cable explosion. They stated that additional protection is needed for persons who handle high-voltage longwall cables, since persons have been burned when power conductor insulation deteriorates within the cable and the power conductors fault or contact each other, causing the cable to explode. MSHA disagrees. Shielded-type cables, required by existing regulations, provide the necessary protection for miners by limiting or preventing electrical arcing and flashover within the cable. This protection occurs as long as the cables are used in conjunction with proper mechanical protections required under § 75.817, and with proper maintenance of electrical protective devices required under § 75.814. Therefore, paragraph (a) of this final section remains as proposed.

Paragraph (b) of the final rule requires high-voltage insulated gloves, sleeves, and other insulated personal protective equipment, to have a Class 1 (7,500 maximum use volts) or higher rating that has been established by a nationally recognized consensus standard. The protective equipment must be: (1) Examined prior to each use for signs of damage or defects; (2) destroyed or removed from the underground area of the mine if found damaged or defective; and (3) electrically tested every six months according to a nationally recognized consensus standard. This provision protects against electrical shock hazards by requiring personal protective equipment to be rated for a maximum use voltage and examined before each use to determine if the equipment is safe to use. Paragraph (b) of the proposed rule required all personal protective equipment to be rated for 20,000 volts; examined before each use for visible signs of damage; removed from the underground area of the mine when damaged or defective; and electrically tested every six months.

A commenter suggested that this paragraph be modified to allow gloves to be rated for a minimum of 5,000 volts and tested every six months as described in a nationally recognized consensus standard. The Agency is not aware of any recognized consensus standards that rate gloves, sleeves, and other personal protective equipment at 5,000 volts. The commenter also stated that damaged or defective gloves should be permitted to be either removed from the underground area of the mine or destroyed.

Another commenter stated that insulated personal protective equipment should be electrically tested by the manufacturer in accordance with ASTM standards and be rated for at least the maximum nominal voltage of the circuit. The commenter also stated that personal protective equipment should be examined before each use for visible signs of damage or defects and be electrically tested at least every six months or when there is any sign of excessive wear. This commenter stated that the visible and electrical tests

should be conducted in accordance with American Society for Testing and Materials (ASTM) standards.

In response to the commenters' concerns, we agree that safety would be enhanced by adopting the ASTM standard. We have revised paragraph (b) of the proposed rule. The final rule requires insulated protective equipment, including high-voltage gloves and sleeves, to be rated a Class 1 or higher (maximum use voltage of 7,500 volts). Paragraph (b)(1) requires that this equipment be examined before each use for visible signs of damage or defects. This section requires users of protective equipment to examine it for hazardous conditions, including excessive wear. For example, a method commonly used to detect damage in insulating gloves is to test the rubber gloves by rolling the cuff tightly toward the palm of the glove in such a manner that air is entrapped inside the glove. Puncture detection may be enhanced by listening for escaping air or by feeling escaping air against the face.

In response to commenters, the Agency has revised paragraph (b) in the final rule to allow defective personal protective equipment to be destroyed or removed from the mine. The Agency agrees with the commenter that destroying this equipment when it becomes defective is as effective as removing it from the underground mine.

MSHA also received comments suggesting that insulating protective equipment be tested every six months in accordance with nationally recognized standards. The Agency agrees with this commenter and has revised paragraph (b) to require that all insulated handling equipment for use with high-voltage longwall cables be electrically tested every six months in accordance with a nationally recognized consensus standard contained in the ASTM F496–97, ''Standard Specification for In-Service Care of Insulating Gloves and Sleeves.'' The purpose of these formal testing procedures for high-voltage cable handling equipment is to provide necessary safety protections for miners and ensure that unknown equipment defects will be detected before they are a hazard to miners.

Section 75.819 Motor-Starter Enclosures; Barriers and Interlocks

Section 75.819 of the final rule, like the proposed rule, requires separation by location, partitions, or barriers of low- and medium-voltage circuits from high-voltage circuits in motor-starter enclosures and requires cover interlock switches to be installed on the cover of any motor-starter compartment containing high-voltage components. The compartment separations and interlock switches must be maintained in accordance with paragraphs (a) and (b) of § 18.53—*High-voltage longwall mining systems.* The purpose of § 75.819 is to help guard against miners coming in contact with energized internal components of high-voltage electric equipment through proper maintenance of safety devices that assure deenergization when any cover that provides access to energized high-voltage components is removed. Compartment separation also helps assure that persons are not exposed to adjacent energized high-voltage components or circuits after gaining access to compartments containing control, communication, or other low- and medium-voltage circuits.

This provision provides automatic protection for miners who may inadvertently remove a cover exposing energized high-voltage circuits should the wrong circuit be disconnected. There were no comments received on this section of the proposed rule and it remains as proposed.

Section 75.820 Electrical Work; Troubleshooting and Testing

Section 75.820 is directed at protecting miners while they are performing electrical work, including troubleshooting and testing, and the removal of belt structure. This section is derived, in part, from existing §§ 75.509—*Electric power circuit and electric equipment; deenergization,* 75.511—*Low-, medium-, or high-voltage distribution circuits and equipment; repair,* and 75.705—*Work on high-voltage lines; deenergizing and grounding* and addresses requirements for performing work on all circuits and equipment associated with high-voltage longwalls. This section applies to all low-, medium-, and high-voltage circuits and equipment associated with high-voltage longwalls. The requirements are similar to those in existing §§ 75.509 and 75.511 for work on electric circuits and equipment generally, except with additional requirements applicable to high-voltage longwall installations. These requirements include personnel qualifications and safe work procedures, including safety equipment when troubleshooting and testing, and methods to guard against contact with energized high-voltage cables during the installation and/or removal of belt structure(s). The final rule for § 75.820 is identical to the proposed rule except for changes to § 75.820(a), which is revised based on a recent Federal Mine Safety and Health Review Commission decision and §§ 75.820(d)(3) and 75.820(f) which MSHA revised due to comments. The revisions address: (1) The fact that persons qualified under § 75.153—*Electrical work; qualified person* must be able to perform electrical work on *all* circuits and equipment; (2) The type of gloves that must be worn by persons performing troubleshooting and testing; and (3) The methods used to guard against contact with a high-voltage cable during installation and/or removal of belt structure.

Paragraph (a) of the final rule requires that electrical work on all circuits and equipment associated with high-voltage longwalls be performed only by persons qualified, in accordance with § 75.153, to perform electrical work on all circuits and equipment, not just high-voltage circuits and equipment. This change is consistent with the recent Federal Mine Safety and Health Review Commission decision, *Secretary of Labor* v. *Black Mesa Pipeline, Inc.* 22 FMSHRC 708, 715 (June 30, 2000). That decision concluded that § 75.153 requires that a ''person qualified'' be knowledgeable of high-, medium-, and low-voltage circuits and equipment. Therefore, for clarification purposes, the language of this final rule has been modified to conform with this decision and the plain meaning of § 75.153. This requires that a person qualified to work on electrical circuits be knowledgeable of low-, medium- and high-voltage circuits. The Agency currently requires that qualification in all voltages be obtained before a person can become qualified under § 75.153. The requirement that persons performing electrical work be qualified for all voltages assures that persons performing work on low- and medium-voltage circuits are qualified to identify hazards that may exist on high-voltage circuits in close proximity of their work.

Some commenters suggested that paragraph (a) state that electrical work on all high-voltage circuits and any enclosure containing high-voltage components shall be performed only by persons qualified under § 75.153 to perform electrical work only on high-voltage circuits and equipment. These commenters indicated that the proposed rule would not permit persons qualified under § 75.153 to perform electrical work only on low- and/or medium-voltage circuits or equipment or perform any electrical work on circuits or equipment associated with a high-voltage longwall. The commenters further indicated that certain subsystems of the longwall are completely isolated from high-voltage circuits and equipment such as: lighting systems, communication systems, shield

control systems, hydraulic pump control systems, battery chargers, air compressors, and rock dusters. However, because many low- and medium-voltage circuits associated with high-voltage longwalls are in close proximity to the high-voltage circuits, MSHA believes it is important that anyone performing electrical work on the high-voltage longwall be knowledgeable about low-, medium- and high-voltage circuits. And, as noted above, a person qualified under § 75.153 must be knowledgeable of all voltage circuits.

Since all the circuits cannot be totally isolated, it is important that qualified persons working on the circuits of lower voltages be aware of the hazards of high-voltage circuits. Another commenter inquired as to what the high-voltage qualification requirements were and suggested that MSHA ensure that appropriate training is defined and required. MSHA's existing standard in § 75.511—*Low-, medium-, or high-voltage distribution circuits and equipment; repair* requires that only persons qualified in low-, medium- and high-voltages perform high-voltage work, and § 75.153 sets forth the procedures for their qualification. Additionally, existing § 75.160—*Training programs* requires an MSHA approved plan for retraining qualified persons. Another commenter requested that wording be added to allow anyone to perform high-voltage work under the supervision of a qualified person. Due to the hazards previously described, only qualified electricians perform high-voltage work. Therefore, except for the clarifications noted above, paragraph (a) of this section remains as proposed.

Generally, paragraphs (b)(1) through (b)(4) of § 75.820, like the proposed rule, require safety precautions to be taken by qualified electricians prior to performing electrical work. The qualified electrician is responsible for assuring that the electrical circuit is properly deenergized, that the contacts of the circuit disconnecting device are open, and that the disconnecting device is locked out with a padlock and tagged. These precautions assure that the affected circuit has been properly deenergized and disconnected so that persons performing work are not exposed to shock, electrocution, or burn hazards. Without taking precautions, such as properly locking out and tagging the affected circuit, qualified electricians would be exposed to shock and electrocution risks if someone were to inadvertently reenergize the circuit.

Paragraph (b)(1) of the final rule specifically requires that a qualified person deenergize the circuit or equipment with a circuit-interrupting device. There were no comments on paragraph (b)(1) of the proposed rule. This paragraph of the section remains as proposed.

Paragraph (b)(2) of the final rule requires that a qualified person open the disconnecting device when performing work on circuits and equipment, and if high-voltage, ground the circuits. Opening the disconnect device deenergizes the circuit which, along with grounding, protects the person working on the circuit from shock and electrocution hazards. A commenter stated that in addition to grounding the circuit prior to work being performed, that grounding hot sticks (a collapsible non-conductive pole used to de-energize electrical circuits) rated at 4,160 volts should be available at each power center and a proximity tester should be used by the qualified electrician to determine that the circuit is deenergized. In response to this comment, § 75.815(b) of the final rule requires that the disconnecting devices be maintained in accordance with the approval requirements of paragraph (f) of § 18.53. Section 18.53(f) in turn requires that the disconnecting devices ground the circuit when ''open.'' In addition, the requirement in paragraph (b)(3) of § 75.820 places responsibility on each qualified person to lock out the disconnecting device for the high-voltage circuit prior to performing work. Therefore, MSHA concludes that equipping power centers with grounding hot sticks, clamps, and proximity testers, as suggested by the commenter, is not necessary. Therefore, paragraph (b)(2) of this section remains as proposed.

Paragraph (b)(3) of the final rule, like the proposed rule, requires that disconnecting devices be locked with an individual padlock by each person performing work. Individual padlocks, removable only by the persons who installed them, place responsibility on the persons performing work to assure their personal safety. This should prevent accidental reenergization of equipment or circuits before all persons have completed work. The danger and accident history of reenergization of circuits before work is completed require such measures for the protection of miners against electrocution or electric shock. A commenter suggested that the section be reworded to permit the oncoming worker to install his/her lock, and the departing worker to remove his/her lock at the change of shifts. Another commenter suggested that MSHA recognize that service or maintenance in many cases is performed by a new crew or group of people and that a group lockout procedure be allowed. This commenter suggested that primary responsibility can be vested with an authorized employee when more than one group is working on the equipment, so that an authorized person from each group may lockout the equipment. A review conducted by the Agency in 1999 revealed that during the period 1970 to 1999, a total of 145 fatal accidents occurred by miners contacting energized circuits. Data further revealed that during a five year period between 1994 and 1999, a total of nine fatal accidents were related to failure to lockout disconnecting devices. The review also revealed that deaths and injuries had also occurred when equipment was energized before all persons had completed their work. Furthermore, the National Safety Council in *Data Sheet 237 Revision B, Methods of Locking Out Electrical Switches (1971)*, recommends that individual, not group, type lockout procedures be used. This publication is available in the rulemaking record. Consistent with Agency experience and safety recommendations, the final rule requires individual lockout rather than group lockout. MSHA is confident that this system provides the necessary safety protection because persons assigned to place and remove their own locks are more cognizant of and responsible for their own security, and more likely to take the steps necessary to assure proper deenergization. This also reduces the risk of error due to lack of communication or inadvertent reenergization. For these reasons, the paragraph remains unchanged from the proposed rule.

Paragraph (b)(4) of the final rule, like the proposed rule, requires tags used on deenergized circuits and equipment to identify each person performing work and the circuit or equipment on which work is being performed. There were no comments on this paragraph of the proposed rule and it remains as proposed.

Paragraph (c) requires, like the proposed rule, that only the persons who install a padlock and tag be permitted to remove them. This provision also provides for an exception where an operator could authorize someone else to remove the lock and tag if the person who installed them is unavailable at the mine. Such authorized person is required to be qualified to perform electrical work. Additionally, the person who had originally installed the lock and tag must be informed of the lock removal before resuming work on the circuit or equipment. A commenter stated that in the absence of the person who installed

the lock, the mine operator may designate a qualified electrician to remove the lock after it has been determined that all other affected persons are not exposed to a hazard. Paragraph (c) of the final rule requires locks to be removed by the person who installed them or by qualified persons authorized by the operator, if that person is unavailable at the mine.

Paragraph (d) of the final rule requires that certain safety procedures be followed when troubleshooting and testing energized circuits. This includes limiting troubleshooting and testing of energized circuits only to low- and medium-voltage systems. In addition, only qualified electricians wearing properly insulated rubber gloves are permitted to perform this work and only for the purpose of determining voltages and currents. This provision recognizes that, in some instances, it is necessary for circuits or equipment to remain energized for troubleshooting and testing. For example, in order to understand the nature of problems within a circuit, it may be necessary to take voltage or current readings while the circuit is energized.

Paragraph (d)(1) of the final rule, like the proposed rule, limits troubleshooting and testing of energized circuits only to low- and medium-voltage systems. Since troubleshooting and testing energized circuits is known to be inherently hazardous work, the particular skills and training of a qualified electrician are necessary for performance of these tasks. Troubleshooting and testing is limited to low- and medium-voltage energized circuits, primarily due to insulation ratings of available troubleshooting and testing equipment. Insulation ratings on equipment commonly used to troubleshoot and test in underground mines are insufficient to protect persons if such equipment is used to troubleshoot and test high-voltage circuits.

A commenter suggested that troubleshooting of energized circuits ranging from 120 to 1,000 volts (low to medium voltage) should be prohibited. This commenter indicated that the industry has already demonstrated that high-voltage longwalls can be installed, commissioned, and maintained without maintenance personnel being exposed to any voltage higher than 120 volts. The commenter further stated that if multiple utilization voltages are required in the same compartment, then each supply should have a disconnect device, and cover switches should be arranged to trip circuit-interrupting devices to cut off both voltages. Some high-voltage longwalls are designed with equipment supplied from low- and medium-voltage as well as high voltage. These hybrid-type longwall systems include both high-voltage and low- and medium-voltage equipment. This provision allows troubleshooting and testing of low- and medium-voltage circuits associated with these hybrid longwalls. Based on Agency experience with petitions for modification allowing such testing, troubleshooting, and testing of low- and medium-voltage circuits can be safely performed with proper test instruments, and with use of protective gloves that are commercially available. Therefore, paragraph (d)(1) of this section remains as proposed.

Paragraph (d)(2) of the final rule permits troubleshooting and testing of energized circuits only for the purpose of determining voltages and currents (amperes). Some commenters suggested that paragraph (d)(2) be changed to allow troubleshooting and testing to determine waveform or other electrical diagnostic testing as well as voltages and currents. The final rule, as written, is responsive to the commenter's suggestion because evaluation of waveform or diagnostic testing is normally considered to be a method of measuring voltage and current. Paragraph (d)(2) of this section remains as proposed.

Paragraph (d)(3) of the final rule requires that troubleshooting and testing of energized circuits be performed by persons qualified under § 75.153 who wear protective gloves when the voltage of the circuit exceeds 40 volts. This should prevent accidents related to contact with energized circuits while troubleshooting and testing. These gloves will provide the insulation protection necessary if a miner has inadvertent contact with energized circuits during troubleshooting and testing. A commenter stated that the circuit is designed to permit troubleshooting of 120-volt alternating current (VAC) control power. During this period, high voltage is not present while the normal/test auxiliary switch is in the ''test'' position and the incoming high-voltage disconnect is in the ''open/grounded'' position. This commenter suggested that gloves be rated for 120 VAC rather than the nominal voltage of the circuit. The Agency is not aware of any gloves rated for less than 1,000 volts. The rating of gloves is determined commercially through formal testing procedures established by national standards.

Another commenter suggested that this paragraph be changed to permit the use of dry work gloves when troubleshooting low- and medium-voltage circuits and to permit troubleshooting of high-voltage circuits. The commenter added that wearing rubber gloves should be required when working with high-voltage circuits; however, requiring that rubber gloves be worn when troubleshooting low- and medium-voltage circuits would diminish safety. In response to these comments, MSHA believes that rubber gloves do not permit sufficient dexterity, as do dry cloth gloves, for the safe troubleshooting of low- and medium-voltage circuits. For example, an ohm meter has small controls which are difficult to operate while wearing rubber gloves and the small metal probes used with the ohm meter are hard to pick up while wearing rubber gloves. A serious accident could result if probes were improperly placed in an energized circuit or dropped in close proximity to voltages up to 995 volts. In contrast, dry work gloves allow for manual dexterity while providing adequate protection. The commenter specified that his company has safely used dry work gloves when troubleshooting low- and medium-voltage circuits for 15 years. The commenter further stated that proposed § 75.820(d) would conflict with existing § 75.509—*Electric power circuit and electric equipment; deenergization* in two respects. The first is that § 75.509 permits troubleshooting of high-voltage circuits, as well as low- and medium-voltage circuits. In contrast, proposed § 75.820(d)(1) would permit troubleshooting only on low- and medium-voltage circuits. The second is that proposed § 75.820 conflicts with MSHA's interpretation of § 75.509 concerning situations where insulated rubber gloves are required. MSHA's Program Policy Manual states:

> Work gloves in good condition are acceptable for troubleshooting or testing energized low-or medium-voltage circuits or equipment. *High-voltage gloves, rated at least for the voltage of the circuit, are required for troubleshooting or testing of energized high-voltage circuits or in compartments containing exposed energized high-voltage circuits. (This portion has been corrected by MSHA Program Policy Update V–15.)*

The commenter further stated that in order to be consistent with § 75.509, as well as prudent mining practices, proposed § 75.820(d) should be changed to permit both troubleshooting of high-voltage circuits and use of dry work gloves for troubleshooting low- and medium-voltage circuits.

In response the Agency states that existing § 75.705—*Work on high-voltage lines; deenergizing and grounding* specifically applies to high-voltage circuits out from (outby) the longwall mining faces or pillar workings. Section

75.705 specifically prohibits work on high-voltage lines underground in relation to troubleshooting and testing of high-voltage circuits. Section 75.509 generally applies to all electrical circuits and is less restrictive. This final rule specifically applies to high-voltage circuits on longwalls and is consistent with the safety requirements of existing § 75.705.

Based on Agency data and experience, it is our view that attempts to troubleshoot and test energized high-voltage circuits using standard test equipment, such as volt-ohm-meters, commonly used on low- and medium-voltage circuits, is extremely hazardous. MSHA prohibits troubleshooting and testing of energized high-voltage circuits and equipment. The use of hand-held proximity testers to determine shielding continuity and energized circuits is allowed under this regulation. Troubleshooting and testing routinely involves the use of portable test instruments equipped with attached leads and metal probes used to move from point to point in a circuit for the purpose of determining voltage and/or current readings needed to target problem areas. Insulation ratings on equipment commonly used to troubleshoot and test are insufficient to protect persons if this equipment is used on high-voltage circuits. The commenter stated that the MSHA program policy manual permitted troubleshooting and testing of energized high-voltage circuits. After review, MSHA determined that this policy was inadvertently drafted in error and specifically conflicts with mandatory safety standard § 75.705. The error was corrected in MSHA Program Policy Update V–15. The printed-in-error version was never officially considered or enforced as MSHA policy.

Other commenters suggested—(1) that gloves not be required under the standard when the maximum circuit voltage does not exceed 40 volts; (2) that dry work gloves in good condition be required when the maximum circuit voltage does not exceed 150 volts or the circuit voltage exceeds 150 volts but is intrinsically safe; and (3) that insulating gloves, with protective coverings designed to prevent physical damage to the insulating material, be required when the maximum circuit voltage exceeds 150 volts and the circuit is not intrinsically safe.

MSHA agrees with some of the commenters' suggestions and has written the final rule to reflect these changes. The final rule requires the use of protective gloves when troubleshooting and testing circuits having voltages that exceed 40 volts. Based on MSHA electrical accident information and experience, 40 volts is the lowest voltage level range at which shock hazards are minimized. Other mandatory safety standards, such as §§ 77.515—*Bare signal or control wires; voltage,* 75.901—*Protection of low- and medium-voltage three-phase circuits used underground*, 75.902—*Low- and medium-voltage ground check monitor circuits,* and 77.902–1—*Fail safe ground check circuits; maximum voltage,* use 40 volts as a minimum safety voltage range level. Section 18.50—Protection against external arcs and sparks also uses 40 volts as a minimum voltage range level for shock hazard protection guidelines for electrical equipment frames. Dry work gloves, in good condition (free of holes, etc.) will be permitted on circuits where the voltage does not exceed 120 volts nominal and on circuits where the voltage exceeds 120 volts nominal but is intrinsically safe. The normal control circuit nominal voltage value is 120 volts for mining equipment. Section 75.1720—*Protective clothing, requirements* and MSHA policy allow miners to use dry gloves when working on circuits up to 1000 volts. Rubber insulating gloves rated for at least the nominal voltage of the circuit and equipped with leather protectors will be required to be used on circuits where the voltage exceeds 120 volts nominal but is not intrinsically safe. (See paragraphs (b)(3) and (b)(4)). Mine equipment typically has ratings such as 220-, 480-, 995-volts and higher. Rubber gloves are not commercially rated for each of these voltages. Rubber insulating gloves rated at 1,000 volts are commercially available at this time. The 1,000 volt rated gloves can be used on each of these circuits and, in fact, offer increased protection for troubleshooting and testing on circuits exceeding 120 volts.

MSHA's fatality data show that at least six fatalities have occurred since 1970 due to miners' contact with energized circuits while troubleshooting and testing. The provisions of § 75.820 address electrocution and shock hazards associated with troubleshooting and testing of the low- and medium-voltage portions of high-voltage longwalls and provide additional protection for persons performing work on these circuits.

Commenters suggested that the proposed rule be expanded to include facial protection, and protective clothing to minimize the risk of injury in case of a short circuit during troubleshooting and testing of an energized circuit. In support of this suggestion, commenters stated that these additional requirements were needed to protect persons from an electrical explosion, an electrical flash, and from flying debris. Commenters suggested that injuries could be minimized if protective clothing, such as a leather vest instead of polyester, was worn, as clothing made of material that melts could compound an injury.

In response, the Agency concludes that when mine operators and miners comply with the provisions of this final high-voltage rule, including proper testing, examination, and maintenance of circuits and equipment, and safe procedures during troubleshooting and testing, hazards such as flying debris, electrical arcing, and flashover can be avoided. Electrical arcing during troubleshooting and testing is normally due to either misapplication or misuse of test equipment. In some cases, electrical hazards may occur as a result of circuit insulation failure while troubleshooting. Under the final rule, only qualified individuals must be assigned to perform troubleshooting and testing. Further, they must perform thorough examinations, tests, and maintenance of circuits and equipment to help guard against the occurrence of injury due to electrical arcing caused by failure of insulation.

Paragraph (d)(4) of the final rule requires that rubber insulated gloves, when required, be rated at least for the nominal voltage of the circuit. This requirement was contained in paragraph (d)(3) of the proposed rule. Comments pertaining to this proposed rule are addressed above. The language of this provision remains the same as the proposed, but it is renumbered.

Paragraph (e) of the final rule, like the proposed rule, requires deenergization of high-voltage circuits contained in a compartment with low-or medium-voltage circuits, in order to troubleshoot or test the low-or medium-voltage circuits. Deenergizing, grounding, and locking out and tagging the high-voltage circuit provides protection against the danger of accidental contact with the high-voltage circuits while troubleshooting and testing low- and medium-voltage circuits. Some commenters suggested that high-voltage circuits should never be located in the same compartment with low- and medium-voltage circuits in order to prevent persons from contacting high-voltage circuits while testing or working on low- and medium-voltage circuits. In response to this comment, electrical closing of high-voltage contactors contained in motor-starter enclosures requires low-voltage magnetic components that are a part of the contactors. Therefore, sometimes it is necessary, to have both high voltage in

the form of a power circuit and low voltage in the form of a control circuit in the same compartment(s) of the motor-starter enclosures. In addition, compartments of motor-starter enclosures that house high-voltage disconnect switches may also contain low-and/or medium-voltage control and lighting transformers. The deenergization and lockout requirements under the new standard address the safety concerns associated with working near multiple voltage circuits. Therefore, the Agency concludes that paragraph (e) of this section should remain as proposed.

Paragraph (f) of the final rule requires that high-voltage cables located in conveyor belt entries be deenergized, guarded, or isolated by elevation prior to the installation or removal of the conveyor belt structure. The proposed rule required that the cables be deenergized prior to the removal of the structure. Other commenters suggested that the deenergization requirement should apply to the installation, as well as the removal, of conveyor belt structures. These commenters pointed out that the same type of work is performed during belt installation as during removal. The Agency agrees with these commenters and has concluded that the final rule should apply to advancing as well as retreating longwall systems. Therefore, the requirement has been changed to apply to installation as well as removal of conveyor belt structures. Contact with or damage to energized cables while installing or removing conveyor belt structures could cause risks of fire and electrocution to miners. The final rule addresses these dangers by requiring either deenergization, guarding, or proper location of the cables before installing or removing belt structures.

Commenters suggested that deenergizing the high-voltage cable for removal of the belt conveyor structure is often impractical and that an alternative would be to guard the cable from direct contact with the belt conveyor structure during removal. Reasons given for this alternative were: (1) Many of the routine jobs performed along the longwall face cannot be performed with the power off (such as repositioning of the longwall shearer, moving the shields electronically and moving the face conveyor, as well as equipment servicing and welding operations that typically contribute to the normal safe and efficient operation of the longwall) and (2) Methane monitors, face lighting, and on-board shield diagnostics would lose power if they receive electrical power through the high-voltage system that feeds the face equipment. In addition, the commenter pointed out that belt structure removal occurs 2 or 3 times a shift, taking 15 to 30 minutes each time. Other commenters suggested that this provision be deleted, since proper guarding is required by § 75.816. These commenters suggested that the requirement would result in deenergizing cables even if work is being done 10,000 feet from the cables. Another commenter suggested that this requirement should be waived if the high-voltage cable is installed on monorail because personnel are safely protected by the location of the cable.

Other reasons given for deleting the deenergization requirement were: (1) It would be less safe for miners, as it would result in deenergization of several longwall safety devices such as the face and equipment illumination system; (2) It would result in an undue burden for operators due to the time required to travel to and from the power center in order to deenergize the cable; (3) It would cause undue stress, wear and tear on electrical breakers, components, and cables due to frequent energizing and deenergizing; and (4) It would prevent most maintenance, service and support functions from being performed while the cables were deenergized. The commenter also pointed out that the occurrence of high-voltage cable faults is infrequent and the commenter has no experience of faults resulting in fire or causing shocks to miners. This commenter further stated that currently required circuit breakers and ground-fault systems provide adequate fault protection and that backup protection is provided by a ''Post Gulliver'' ground-fault system at the commenter's operation. Another commenter suggested that this requirement should only apply to cables which are not guarded and which are located in conveyor belt entries less than three feet away from the conveyor belt structure.

Another commenter suggested that the requirement should not apply where the mine operator can demonstrate that the seam height provides ample clearance of at least 6.5 feet or other methods are used to prevent any possible mechanical damage to high-voltage cables which may occur during removal of conveyor belt structures. Another commenter indicated that the phrasing of the proposed rule led the commenter to believe that MSHA was referring to the complete removal of the conveyor belt structure (as would be the case for an advancing longwall). This commenter indicated that operators are concerned about application of the rule to the more common retreating longwall situation where it is part of the routine work to frequently remove sections of conveyor structure. This commenter indicated that procedures have been developed to ensure that this work can be done without risk of high-voltage cables creating a hazard.

In response to these commenters, the Agency has changed the language of the proposed rule. The final rule allows guarding or protection by elevation as another means of protecting cables from damage and to minimize danger of contact with energized cables. Proper guarding of cables in accordance with § 75.816 or protection afforded by proper elevation would minimize miner contact with cables and minimize damage to the cables. The Agency agrees that there are safety advantages in leaving the high-voltage cable energized if the cable is properly protected during belt structure installation and removal. Examples of safety equipment that would remain energized are methane monitors and illumination systems.

Section 75.821 Testing, Examination, and Maintenance

Section 75.821 of the final rule requires that a person, qualified to perform electrical work, test and examine equipment and circuits to detect and correct conditions that could lead to an accident and injury. The section requires the qualified person to verify by signature and date that the tests and examinations have been completed. This record will include any unsafe conditions and corrective actions taken. The section further requires that the records be kept and made available for at least one year. This section was derived, in part, from existing §§ 75.512—*Electric equipment; examination, testing and maintenance,* 75.512–2—*Frequency of examinations,* 75.800–3—*Testing, examination and maintenance of circuit breakers; procedures,* and 75.800–4—*Testing, examination, and maintenance of circuit breakers; record* which generally apply to electrical equipment underground. This section applies to high-voltage equipment on the longwall face or within 150 feet of the pillar workings.

Paragraph (a) of § 75.821 requires that persons, qualified in accordance with existing § 75.153—*Electrical work; qualified person,* test and examine high-voltage longwall equipment and circuits to protect miners from electrical or operational hazardous that may exist. As noted under the § 75.820 discussion, based on the recent Federal Mine Safety and Health Review Commission *Black Mesa* decision (22 FMSHRC 708, 715; June 30, 2000), § 75.153 requires that a 'person qualified' be knowledgeable of

high-, medium-, and low-voltage circuits and equipment. Consistent with this decision and for clarification purposes, the language of paragraph (a) has been modified in the same fashion as in § 75.820(a) to conform with the ruling under this decision and the plain meaning of § 75.153. Thus, under this paragraph as revised, a person must be qualified under § 75.153 to perform electrical work on ''all'' circuits and equipment, not just high-voltage circuits. Testing and examining high-voltage longwall equipment and circuits allows qualified persons to determine that the electrical protection, equipment grounding, permissibility, cable insulation, and control devices are properly maintained to prevent fire, electric shock, ignition or operational hazards from existing on the equipment. Keeping equipment free from these hazards is assured by the training and expertise of qualified electricians. Regular testing and examination of high-voltage equipment used in face areas assures that hazardous conditions are discovered and corrected before they can cause injuries to miners. The standard requires examinations and tests of high-voltage longwall equipment at least once every 7 days.

Examinations and tests include activating the ground-fault test circuit which is required by § 75.814(c) of this final rule. The standard assures that problems which arise during normal use of mining equipment will be identified and corrected, so that miners are not exposed to hazards. Activating the ground-fault test circuit will identify any damage or defects in the ground-fault circuit and therefore protect miners from being exposed to energized longwall equipment frames.

A commenter stated that 30 CFR part 75 requires mine operators to conduct a multitude of tests in the underground environment. The commenter further stated that these tests are normally conducted on a ''daily,'' ''weekly,'' or ''monthly'' basis, and that the proposed rule is confusing and can present a problem for those operations working under nontraditional schedules. The commenter recommended that for clarity and consistency, the phrase ''once every 7 days'' be removed and the word ''weekly'' be substituted. In response to this comment, circuits and equipment used in conjunction with high-voltage longwalls are frequently being moved and subjected to heavy use, increasing the likelihood of wear and breakdown. Because of this, it is extremely important that defects in circuits and equipment be detected as quickly as possible and repaired before the occurrence of related accidents and injuries. The Agency considers it very important that the required examinations and tests be conducted as frequently as possible from the standpoint of safety and practicability, and that an examination at least once every seven days rather than weekly provides this assurance. A requirement for a weekly examination can result in the equipment not being examined for as long as 13–14 days. In addition, the seven-day requirement is consistent with similar type requirements contained in regulations promulgated by the Agency pertaining to ventilation under §§ 75.312(b)(1)(ii)—*Main mine fan examinations and records* and 75.364(a)—*Weekly examination.* Another commenter suggested that the proposed provision was too vague and in order to eliminate confusion, submitted the following examination requirements: (1) Actuate each ground-fault test circuit required by § 75.814(c); (2) Examine the cable guarding and handling system to ensure that they are properly installed and protecting the cables; (3) Determine that explosion-proof components are maintained in permissible condition; (4) Actuate the emergency stop button and verify that the corresponding circuit-interrupting device opens; and (5) Verify that the face communication system is operational. Another commenter suggested that the proposed examination requirements were so comprehensive that it would take a skilled person two days and that the more limited examination suggested by the previous commenter would cover the essential safety aspects.

In response to the comments regarding adoption of less time-consuming examination requirements, the complex high-voltage longwall mining system contains numerous cables, conductors, and pieces of equipment that require time-consuming examinations to assure safe operating conditions. Although proper circuit and equipment maintenance requires both visual and physical examinations, most examinations are visual. In addition, testing of circuits and equipment routinely includes activating available test switches to verify proper operation and causes the protective devices to open. High-voltage longwall equipment contains circuit protective devices that are mounted in heavily constructed explosion-proof enclosures containing large bolted covers and cables that are protected by heavily constructed guarding. The proposed rule required, in part, that a determination be made that protective devices, in some cases contained within these enclosures, and cables protected by the described guarding, be inspected to assure proper maintenance. The Agency believes that verification of proper maintenance regarding these items would not require, in all cases, removal of the equipment covers and cable guards in order to make this determination. Some protective device settings do not change, so frequent removal of covers to gain access for inspection serves no useful purpose and reduces safety if covers are not properly replaced. Removing and replacing guards that are installed to provide mechanical protection for cables, without good reason, could likewise result in an unsafe condition if not properly replaced.

Since 1970, Title 30 CFR has contained an examination, test, and maintenance requirement for electric equipment that is more basic than § 75.821. The Agency has been asked on several occasions to describe the required extent of proper examination of circuits and equipment. Since there are so many varieties of circuits and equipment in use in mines, it is impractical to describe a specific inspection procedure that applies to all circuits and equipment in all instances.

Consequently, a general type inspection procedure, such as that contained in this final rule, is necessary. The amount of detail needed for a given inspection is normally determined on a case-by-case basis, as the inspection takes place. For example, the testing of ground monitors would normally only require simple activation of readily available test switches; however, findings revealed during this portion of the inspection of the longwall circuits and equipment may indicate a need for more thorough examinations and tests. For example, if an ohm meter test determined that a condition existed in a cable, such as an inadvertent connection between a pilot wire and ground wire rendering a ground monitor inoperative, further examination and correction would be required to establish effective ground monitoring. For these reasons, the Agency concludes that the final rule require general type examinations and tests be conducted. Therefore, except for the change based on the *Black Mesa* decision, paragraph (a) of this section remains as proposed.

Paragraph (b) of the final rule, like the proposed rule, requires that each ground-wire monitor and corresponding circuit be examined and tested at least once each 30 days to verify that it is operating properly and will cause the corresponding circuit-interrupting device to open. This procedure assures that ground-wire monitors and corresponding circuit-interrupting

devices will operate properly to deenergize the circuits that they monitor. A commenter suggested that the requirement for testing of ground-wire monitors be relocated to another section of the rule, or possibly § 75.803—*Fail safe ground check circuits on high-voltage resistance grounded systems.* The Agency has determined that the important safety protection provided by these devices and their use on operating high-voltage longwall equipment necessitates placing ground monitor testing requirements in this section of the final rule. This is required in addition to other relevant testing requirements for other protective systems on high-voltage longwall equipment.

Another commenter suggested that the testing be limited to the operation of appropriate control circuit test devices in the power center or high-voltage motor-starter enclosure, and indicated that it should not be necessary to open any explosion-proof enclosure or to disconnect any ground wire while testing a ground-wire monitor. These commenters suggested that language be added to the provision that specifies the test be initiated by operating the test switch provided as part of the ground-wire monitor, or a similar switch installed in the power center or the high-voltage motor-starter enclosure. As stated above, proper examination and testing of ground-wire monitors and associated circuits, which include pilot wires and grounding conductors, may require more than simple activation of a test switch that normally opens the pilot wire. Therefore, paragraph (b) of this section remains as proposed.

Paragraph (c) of the final rule requires equipment to be immediately removed from service or immediately repaired when examinations or tests reveal a fire, electric shock, ignition, or operational hazard. This provision assures that equipment which may pose a danger to miners will not be used until the hazardous condition is corrected. Some commenters stated that the term ''immediately'' should be added to this provision. These commenters indicated that it is of utmost importance that whenever tests and examinations reveal malfunctions and defects, equipment must be repaired or removed from service immediately. They pointed out that operators may be reluctant to shut down a longwall operation to make necessary corrections and that confrontational situations and any misinterpretations could be avoided by adding this clarification to the standard.

The Agency agrees with the commenter and has added the word ''immediately'' to § 75.821(c) of the final rule. ''Immediately'' is intended to reflect its plain meaning that the required action be without hesitation or delay. It is emphasized, however, that the rule is referring to those safety defects that are considered hazardous, as stated under § 75.821(c). For example, some conditions, such as bare energized conductors in cables or conductors, present fire, electric shock, ignition, and possibly even operational hazards and require either immediate removal from service or immediate repair. However, conditions may exist that would not require immediate shutdown of equipment, but due to the nature of the condition, would permit continued operation of the equipment until material or parts necessary to correct the condition are procured, or would permit orderly shutdown of equipment prior to repair. For example, § 75.816 of this final rule requires guarding of high-voltage cables in specific locations. Unless there are other extenuating circumstances such as damaged cable or bare conductors present, a torn portion of guarding material would not be judged a condition that would have to be corrected immediately. It is the Agency's intent that once a condition with the potential to result in a fire, electric shock, ignition, or operational hazard is revealed correction of the condition should begin immediately. This includes arranging for orderly shutdown or removal of the equipment for repair until the necessary repair parts are obtained and installed.

Paragraph (d) of the final rule, like the proposed rule, requires the person who performs examinations and tests to certify by signature and date that they have been conducted. Also, a record is required for any unsafe condition found and any corrective action taken. This unsafe condition need not be an immediate hazard to be reported. In addition, certifications and records are required to be kept for at least one year and made available at the mine for inspection by authorized representatives of the Secretary and representatives of miners at the mine. Records and certifications of tests and repairs are valuable tools for mine operators and can be used to point out patterns of equipment defects and facilitate improvements in equipment maintenance and design. These records and certifications will assist in identifying that the required examinations were conducted, and will also assist in the investigation of accidents.

A commenter suggested that requiring the examiner's signature is not necessary and eliminates other responsible persons from entering the information as is currently allowed. This commenter pointed out that the results of the examination could be allowed to be entered by the examiner or by a responsible mine official, or information could be transferred from a checklist filled out by the examiner. In response to this commenter, high-voltage longwalls contain complex circuits and equipment that require examinations and tests be conducted only by qualified persons knowledgeable about equipment function and operation. These persons routinely acquire this knowledge through numerous hours of education, training, and experience. Once inspections, including required examinations and tests, of high-voltage longwalls are conducted by qualified persons, it can be concluded that these individuals are the only ones that have the necessary detailed knowledge and understanding of the results of the inspection. Because of this, it is appropriate that only these persons certify by signature and date that the required examinations and tests have been conducted and that unsafe conditions found have been corrected and recorded. This approach is consistent with other examination and recordkeeping requirements promulgated by MSHA.

Another commenter suggested that the operator maintain a written record of each test, examination, repair or adjustment of all circuit breakers protecting high-voltage circuits which enter any underground area of the coal mine and that such records be maintained in a book approved by the Secretary. These commenters indicated that such records are necessary to assure that tests and examinations have been made and would indicate which pieces of electrical equipment were tested and examined and which ones were not. They suggested that a reduction in the amount of recordkeeping diminishes the operator's accountability to provide proof that all equipment has been tested and examined. In response to this commenter, even though existing § 75.512 requires examination of all electric equipment, proposed §§ 75.814 through 75.822 are specific to high-voltage longwall circuits and equipment and not just high-voltage circuit breakers. Since proper test, examination, and maintenance of circuits and equipment is considered to be of extreme importance for the protection of personnel, the Agency concluded it was necessary to draft an examination and testing standard for high-voltage longwall circuits and

equipment. As stated above, the wording of § 75.821(d), which in part, requires that the person who completes the examination and tests certify by signature and date that they have been conducted. This approach is generally consistent with requirements in other regulations promulgated by the Agency. This certification and recording requirement only pertains to high-voltage longwall systems, including associated low- and medium-voltage circuits and equipment. The requirements of § 75.512 remain in effect for circuits and equipment in the mine other than that used on high-voltage longwall systems. Therefore, paragraph (d) of this section remains as proposed.

Section 75.822 Underground High-Voltage Longwall Cables

Section 75.822 of the final rule is new, derived in part from existing § 75.804—*Underground high-voltage cables.* It has been added since the proposed rule in specific response to commenters, and is a logical outgrowth of this high-voltage longwall rulemaking. This section differs from the requirements of § 75.804 by permitting the use of high-voltage cables that have an insulated center ground-check conductor that is smaller than a No. 10 AWG conductor. The Agency developed this new provision in response to industry requests and to accommodate new cable design technology that can either eliminate or significantly minimize inter-machine arcing due to the reduction of current induced into the ground-check conductor. This new cable design technology developed from MSHA and the industry's experience with using smaller ground-monitor conductor sizes in high-voltage longwall cables under MSHA granted modifications. This experience, together with comments from the high-voltage longwall rulemaking process, caused MSHA to conclude that such cable designs should be permitted under the final rule. The development of affordable smaller conductors resulted directly from the high-voltage longwall equipment design and use experience under granted modifications.

Two commenters suggested that a regulation be developed to permit the use of high-voltage cables that have a center ground-check conductor smaller than a No. 10 AWG conductor that is presently required under § 75.804(a). The commenters further stated that MSHA has allowed the use of a smaller ground-check conductor for high-voltage cables through the use of § 101(c) of the Mine Act for petitions for modification. One of these commenters stated that the use of a center ground-check conductor can either eliminate or significantly minimize inter-machine arcing and also provides improved ground-check monitor performance by reducing induced current into the ground-check conductor.

The Agency agrees with these comments, and includes a new section permitting this cable design use in light of its experience with high-voltage longwall petitions. As noted above, these new cable design provisions arise from technology developments referenced by commenters in response to the proposed rule and from the high-voltage longwall experience under the petition process. This section includes requirements from § 75.804 and allows the use of high-voltage longwall equipment cables that are designed with a center ground-check insulated conductor smaller than No. 10 AWG and metallic shields around each power conductor. Acceptable cables are those manufactured to meet nationally recognized consensus standards, such as the Insulated Cable Engineers Association (ICEA) standards and, as provided by the final rule, are designed with a stranded ground-check conductor that is no smaller than No. 16 AWG and is located in the center interstice of the cable conductors. The national consensus standards are developed by recognized experts in their fields. These cables, through the Mine Act § 101(c) petition for modification process, have been used on longwall mining equipment for the past several years and provide the necessary protection from physical damage or stress to the No. 16 AWG center ground-check conductor.

For these reasons, the Agency has determined that allowing the use of a No. 16 AWG center ground-check conductor can provide equivalent or improved protection as provided by a regular No. 10 AWG conductor. Improved protection is provided by the No. 16 AWG ground-check conductor because it is located in the center of the cable creating cable conductor symmetry. This greatly minimizes induced currents and voltages that have been found to occur when using cables where the ground-check conductors are located in the interstices between the phase conductors. These induced currents and voltages can result in arcing, fire or ignition hazards. Using cables with No. 10 AWG conductors has required the installation of external arc-suppression devices to prevent induced currents and voltages. Therefore, permitting cables with No. 16 AWG conductors located in the center of the cables, brings a safer, more efficient, and less burdensome ground-wire monitor system to the mining industry. This small ground-check conductor size is not a requirement but is offered to give added flexibility to mine operators and to minimize their cost burden where feasible. This option became available to the coal industry and coal mine equipment manufacturers as it was developed and used in high-voltage longwall systems under the petition for modification process during the last seven years.

With the advent of high-voltage longwall face equipment, the development and use of No. 16 AWG ground-check conductors for high-voltage longwall equipment became an affordable technology with additional safety benefits. This standard also eliminates the need for § 75.804(a) petitions for modification on longwalls for this purpose and facilitates the use of improved high-voltage cable designs. These cable designs should reduce the hazards associated with locating severed ground-check conductors, thereby discouraging the bypassing of ground-wire monitors when a cable has experienced a broken or severed ground-check conductor. Mines using this cable design have reported less downtime by having to locate and repair broken or severed ground-check conductors.

A commenter recommended that the word ''metallic'' not be used to describe the shielding that surrounds the individual power conductors and that the rule should allow the use of other materials to be incorporated in the construction of the shielding. The commenter did not specify what other types of materials should be used as shielding around the power conductors. Experience indicates that use of high-voltage cables with metallic shielding that surrounds the individual power conductors provides the intended protection against electrical hazards. Thus, the Agency has retained the cable design specifications that incorporate metallic shielding around each power conductor.

Section 75.1002 Installation of Electric Equipment and Conductors; Permissibility

This section of the final rule is derived from existing §§ 75.1002—*Location of trolley wires, trolley feeder wires, high-voltage cables and transformers* and 75.1002–1—*Location of other electric equipment; requirements for permissibility* and addresses requirements for conductors and cables used in or inby the last open crosscut, and electric equipment and conductors and cables used within 150

feet of pillar workings. The final rule revises existing § 75.1002 and removes § 75.1002–1, which prohibited the use of high-voltage cables inby the last open crosscut and within 150 feet of pillar workings or longwall faces. It also revises § 75.1002 related to the use of permissible equipment in these areas.

Paragraph (a) of the final rule, like the existing rule and proposed rule, continues to require that only permissible electric equipment be located within 150 feet of pillar workings or longwall faces. This equipment is specifically designed to protect miners against fire and explosion hazards in the mining face areas such as the longwall face where methane gas would likely accumulate and possibly cause an ignition or explosion.

Paragraph (b) of the final rule, like the existing rule and proposed rule, limits the types of electric conductors and cables permitted in areas where permissible equipment is required. This section prohibits the installation of conductors such as trolley wires and trolley feeder wires in areas where permissible equipment is required. Such electric conductors could provide a ready ignition source and therefore must not be used where permissible equipment is required. Permissible equipment is defined under 30 CFR § 18.2—*Definitions* and under § 318(i) of the Mine Act. Such equipment is specifically approved by MSHA for use in fire and explosive hazardous areas. However, the new final paragraph (b)(1), like the proposed rule, permits the use of shielded high-voltage longwall cable. Such shielding and design protect against arcing and other electrical ignition hazards that may occur when the outer jacket material of the cable is damaged. The use of shielded high-voltage cables supplying power to permissible longwall equipment reduces the risk of fire or explosion in face areas since these cables have equivalent or superior mechanical and electrical protective characteristics. This equipment offers other improved safety features, such as short-circuit and ground-fault protection against shock, fire, and explosion hazards. The final rule continues to prohibit the use of such nonpermissible equipment not specifically approved by MSHA for use near the actual coal extraction areas where increased fire and explosion hazards exist.

The high-voltage longwall final rule does not apply to high-voltage continuous miner use within 150 feet of pillar workings. High-voltage continuous miner petitions granted under existing § 75.1002 (§ 75.1002(b) under this final rule) will remain in effect, and mine operators who do not have granted petitions in effect must file a petition for modification of § 75.1002(b) for the future use of high-voltage continuous miners.

In addition, the high-voltage longwall final rule does not apply to nonpermissible test and diagnostic equipment use. Previously granted petitions under existing § 75.1002–1(a) (§ 75.1002(a) under this final rule) will remain in effect. After the effective date of this rule, mine operators who do not have granted petitions in effect must file a petition for modification for the use of nonpermissible test and diagnostic equipment under § 75.1002(a).

In response to a commenter's suggestion, MSHA has added the term ''longwall faces'' to paragraph (b) of the section. While longwall faces are generally considered to be part of a pillar working, the use of this term more specifically identifies the place where conductors and cables can be used. The addition of this term also maintains consistency with paragraph (a). This term was used in proposed paragraph (a) to clarify that longwall faces are included as part of the pillar working.

Paragraph (b)(1) of the final rule, like the proposed rule, permits the use of shielded high-voltage cables supplying power to permissible longwall equipment. Paragraphs (b)(2) through (b)(4) of the final rule, like the existing standards, permit the use of conductors and cables of intrinsically safe circuits, and cables and conductors supplying power to low- and medium-voltage permissible equipment in or inby the last open crosscut and within 150 feet of pillar workings or longwall faces.

Petitions for Modification

On the effective date of this final rule, all existing petitions for modification for high-voltage longwall use under § 75.1002 will be superseded. Operators are thereafter required to comply with the provisions of this final rule.

Derivation Table

The following derivation table lists: (1) Each section number of the final rule and (2) The section number of the standard from which the section is derived (existing section).

DERIVATION TABLE

Final rule	Existing section
75.2	Partly new.
75.813	N/A.
75.814(a)(1)	75.518–1 & 75.800.
75.814(a)(2)	N/A.
75.814(a)(3)	75.802.
75.814(a)(4)	75.800.

DERIVATION TABLE—Continued

Final rule	Existing section
75.814(a)(5) & (6)	N/A.
75.814(a)(7)	75.800.
75.814(b), (c) & (d)	N/A.
75.814(e)	New (75.518–1).
75.815(a) & (b)	75.808.
75.815(c)	75.520.
75.815(d)(1)	75.601 & 75.808.
75.815(d)(2)	75.705.
75.815(d)(3)	75.511.
75.815(e)	75.520.
75.816 & 75.817	75.807.
75.818(a)	75.705–6 and 75.812.
75.818(b)	75.705–7 & 75.705–8.
75.819	N/A.
75.820	75.153, 75.509, 75.511 & 75.705.
75.821	75.512, 75.512–1, 75.800–3 & 75.800–4.
75.822	N/A.
75.1002 (revised)	75.1002, 75.1002–1.

N/A: Not Applicable.

Distribution Table

The following distribution table lists: (1) Each section number of the existing standards and (2) The section number of the final rule which contains provisions derived from the corresponding existing section.

DISTRIBUTION TABLE

Existing section	Final rule
75.2	Partly new 75.2.
NA	75.813.
75.518–1 & 75.808	75.814(a)(1).
NA	75.814(a)(2).
75.802	75.814(a)(3).
75.800	75.814(a)(4).
NA	75.814(a)(5) & (6).
75.800	75.814(7).
NA	75.814(b), (c) & (d).
New (75.518–1)	75.814 (e).
75.808	75.815 (a) & (b).
75.520	75.815 (c).
75.601 & 75.808	75.815 (d)(1).
75.705	75.815 (d)(2).
75.511	75.815 (d)(3).
75.520	75.815 (e).
75.807	75.816 & 75.817.
75.705–6 & 75.812	75.818 (a).
75.705–7 & 75.705–8	75.818 (b).
NA	75.819.
75.153, 75.509, 75.511 75.705.	75.820.
75.512, 75.512–1, 75.800–3 & 75.800–4.	75.821.
NA	75.822.
75.1002 (Revised) & 75.1002–1 (Removed).	75.1002.

NA—Not Applicable.

III. Paperwork Reduction Act

The information collection requirements contained in this final rule

have been submitted to the Office of Management and Budget (OMB) for review under the Paperwork Reduction Act of 1995 (44 U.S.C. 3501–3520), as implemented by OMB in regulations at 5 CFR part 1320. The Paperwork Reduction Act of 1995 (PRA 95) defines collection of information as ''the obtaining, causing to be obtained, soliciting, or requiring the disclosure to third parties or the public of facts or opinions by or for an agency regardless of form or format.''

This rule contains information collection requirements for high-voltage longwall operators in § 18.53(h), § 75.820(b), § 75.820(e) and § 75.821(d). Annual paperwork burden hours and costs from these provisions are given in the following table. The total first year paperwork burden hours and costs of the rule are 5,736 hours and $163,929, respectively. The total burden hours and costs in each year thereafter will be 5,732 hours and $163,806, respectively.

Manufacturers seeking approval for longwall equipment continue to be required to submit applications for approval including related drawings, drawing lists, specifications, wiring diagrams, and descriptions. The paperwork burden for this application process is approved as part of a petition for modification, under OMB Control Number 1219–0065.

The information collection requirements contained in this rule for part 75 were submitted to OMB for review under the Paperwork Reduction Act of 1995 and were approved under OMB Control Number 1219–0116. This Control Number, however, expired in 1994, and the information requirements have been resubmitted to OMB for reinstatement. In accordance with § 1320.11(h) of the implementing regulations, OMB has 60 days from today's publication date in which to approve, disapprove, or instruct MSHA to make a change to the information collection requirements in this final rule.

TABLE OF ANNUAL BURDEN HOURS AND COSTS FROM THE RULE

	Annual burden Hours in first year	Annual burden hours for each year thereafter	Annual burden costs in first year	Annual burden costs for each year thereafter
Section 18.53(h)	7	3	$247	$124
Section 75.820(b) and (e)	1604	1604	45,831	45,831
Section 75.821(d)	4125	4125	117,851	117,851
Total	5736	5732	163,929	163,806

IV. Executive Order 12866 and Regulatory Flexibility Act

Executive Order 12866 requires that regulatory agencies assess both the costs and benefits of regulations. MSHA has determined that this final rule will not have an annual effect of $100 million or more on the economy and that, therefore, they are not an economically significant regulatory action pursuant to § 3(f)(1) of Executive Order (E.O.) 12866. However, we have determined that this final rule is significant under § 3(f)(4) of E.O. 12866, which defines a significant regulatory action as one that may ''* * * raise novel legal or policy issues arising out of legal mandates, the President's priorities, or the principles set forth in the Executive Order.'' MSHA completed a Regulatory Economic Analysis (REA) in which the economic impact of the rule is estimated. The REA is available from MSHA and is summarized as follows.

Population-at-Risk

MSHA estimates that this rulemaking would initially affect approximately 14,229 miners at 43 underground coal mines and six mines employing about 1,667 miners that would begin using high-voltage longwall equipment in the first year of the rule. The rule would not increase costs to small mines, which MSHA has traditionally defined as having fewer than 20 employees, because such mines do not use longwall equipment.

Benefits

The more stringent criteria and design features associated with high-voltage systems, such as compartment covers that are interlocked to prevent access to energized high-voltage conductors and equipment designed to facilitate safe testing procedures, decrease the likelihood of electrical accidents. In addition, high-voltage cables are required to be shielded around each conductor (SHD type) whereas medium-voltage cables can be shielded around the circumference of the cable (SHC type). The SHD cables are safer than the SHC cables because shielding the individual power conductors reduces the possibility of a short circuit that can cause a fire, or a shock and burn hazard when a miner touches a cable. The SHD shielding reduces the possibility of a shock hazard because an exposed energized conductor will contact the SHD shielding and activate the ground-fault protection, which removes power to the cable. The use of high-voltage SHD cables reduces the chances of cable damage which, in turn, reduces the chances of a miner coming into contact with an energized conductor(s).

Further, the use of high voltage in longwall mining operations may reduce the number of power cables running between various pieces of longwall equipment. In certain situations, the cables may also be smaller, for example, 5,000-volt (high-voltage) power cables are smaller and weigh less than 1,000-volt (medium-voltage) power cables. As a result of fewer and lighter power cables, the risk of injuries from handling power cables during longwall installation, movement, or replacement may be reduced.

Increased productivity gains can be realized when using high voltage rather than medium voltage. In cases where medium voltage is used to power larger motors and heavier duty longwall equipment, current (amperes) can increase, causing motors and/or cables to overheat. However, if high voltage rather than medium voltage is used to power the larger motors and heavier duty longwall equipment, current (amperes) is reduced, and the risk of overheating motors and/or cables diminishes. Also, motor start-up is easier when using high voltage. This increased reliability may reduce the amount of longwall equipment downtime, thereby enhancing coal productivity.

Section 75.818(b)(1) and (2) requires that high-voltage insulated gloves, sleeves, and other insulated personal protective equipment be rated as Class 1 or higher, be visibly examined before each use for signs of damage, and that such protective equipment be removed

from the underground area of the mine when damaged or defective.

Section 75.818(b)(3) requires that insulated personal protective equipment be electrically tested every six months.

Section 75.820(d)(3) requires qualified electricians to wear properly rated rubber gloves in order to perform troubleshooting and testing on low- and medium-voltage circuits in a high-voltage compartment. Currently, petitions for modification do not have this requirement. Thus, § 75.820(d)(3) provides additional safety protection during this troubleshooting and testing.

Finally, the rule continues the same electrical safety requirements developed in the petitions for modification to use high-voltage longwalls.

Compliance Costs

This rule will result in yearly net savings of $23,083,980. This includes a savings per conversion of $6,753,851 attributed to each medium-voltage longwall unit that converts to high-voltage usage. These conversion savings consist of $6,733,280 for accelerated production savings per unit, and $20,571 for filed petition savings per unit.

The net economic effect of the rule includes substantially increased productivity and cost savings for each longwall unit that converts to high-voltage equipment and cables, and a small cost annually for each longwall unit that uses high-voltage equipment and cables. Accelerated production savings are savings due to the more productive high-voltage equipment being used sooner rather than later. Filed petition savings refer to savings due to eliminating legal fees and expenses connected with a filed petition. The elimination of the need to file petitions for modification to use high-voltage longwalls will reduce the costs associated with the petition process and will require less paperwork.

MSHA estimates that the petition process would have imposed costs for legal fees and expenses of about $5,250 for an unopposed petition filing and $112,500 for an opposed petition requiring litigation, including proceedings before Administrative Law Judges, the Assistant Secretary, and courts of appeal. Since 14.3 percent (1 out of 7) of all petitions granted by MSHA in 1998 were contested and required an ALJ's decision, MSHA assumes this same percentage would be contested were future petitions to be filed. Thus, elimination of the petition process would generate a one-time filed petition savings per high-voltage longwall unit of $20,571.

In addition, eliminating the petition process would produce further savings for medium-voltage longwall units that convert to high-voltage units. The rule would eliminate delayed production that could occur as a result of a mine not being able to synchronize initial start-up of its high-voltage longwall equipment with the granting of a petition. The medium-voltage longwall units that convert would have the opportunity to obtain higher productivity yields from the use of high voltage sooner under the rule than under current procedures. Based on an average 66.1 percent increased productivity of high-voltage longwalls over lower-voltage longwalls and an average delayed production time of 78 working days, MSHA estimates that the one-time conversion accelerated production savings due to the petition process would be about $6,733,280 per high-voltage longwall unit.

With respect to individual provisions concerning the 43 existing mines that currently use high-voltage equipment and the medium-voltage longwall units that would shift to high voltage, § 75.818(b)(4) would require mines to perform an electrical test of personal protective equipment every six months. Section 75.820(d)(3) would require electricians to wear properly-rated rubber gloves to perform troubleshooting and testing on low- and medium-voltage circuits that are contained in a compartment with high-voltage circuits. Compliance cost increases of $90 per longwall unit and $168 per longwall unit are identified with §§ 75.818(b)(4) and 75.820(d)(3), respectively.

Economic Impact

The rule enhances productivity in those affected mines because it allows more efficient high-voltage longwall equipment to be established more rapidly in the relatively few underground coal mines in which it can be profitably employed. MSHA has concluded that the rule will have only a small (but favorable) effect on coal output, price, and profitability.

Feasibility

MSHA has concluded that the requirements of the final rule are both technologically and economically feasible.

This final rule is not a technology-forcing standard and does not involve activities on the frontiers of scientific knowledge. The equipment testing, recordkeeping, and rubber glove requirements all involve standard procedures or simple, off-the-shelf technologies. Other provisions of the final rule will reduce recordkeeping and petition requirements.

The final rule is clearly economically feasible insofar as it provides a yearly net *savings* of $23.08 million to high-voltage longwall mines. This includes a one-time savings of $6.75 million for each longwall mine that converts to high voltage as well as annual costs of $258 for each high-voltage longwall mine.

Regulatory Flexibility Act and Small Business Regulatory Enforcement Fairness Act (SBREFA)

The Regulatory Flexibility Act (RFA) requires regulatory agencies to consider a rule's impact on small entities. For the purposes of the RFA and this certification, MSHA has analyzed the impact of the final rule and has determined that there will be a cost savings to small entities affected by this rule.

MSHA will mail a copy of the final rule, including the preamble and regulatory flexibility certification statement, to all underground coal mine operators and miners' representatives. The final rule will also be placed on MSHA's Internet Homepage at *http://www.msha.gov,* under Statutory and Regulatory Information.

In accordance with § 605 of the RFA, MSHA certifies that this final rule will not have a significant adverse economic impact on a substantial number of small entities. No small governmental jurisdictions or nonprofit organizations are affected.

Under the Small Business Regulatory Enforcement Fairness Act amendments to the RFA, MSHA must include in the final rule a factual basis for this certification. The Agency also must publish the regulatory flexibility certification in the **Federal Register**, along with its factual basis.

Factual Basis for Certification

The Agency compared the gross costs of the rule for small mines in each sector to the revenue for that sector for both size categories analyzed (MSHA and Small Business Administration 'small entity' definitions). Given that the gross compliance costs for small mines is substantially less than 1 percent of revenue and that net costs are negative, MSHA concludes that there is no significant cost impact of the rule on small entities that use high-voltage longwall units.

Other small entities potentially affected by the rule are small manufacturers of high-voltage longwall equipment. MSHA concludes that the rule would not have a significant impact upon a substantial number of small

manufacturers of high-voltage longwall equipment.

MSHA also has determined that there are no initial net compliance costs as a result of this rule. The final rule results in a net savings. Currently mine operators are required to file a petition for modification to use high-voltage longwall equipment. This is a costly and lengthy administrative process. This final rule increases safety, effectiveness, and efficiency in the use of high-voltage longwall equipment. The lengthy approval process will be eliminated. The Agency estimates that six existing longwall mines will convert to high voltage and an additional three new longwall mines each year will elect to adopt high-voltage technology in the future.

Unfunded Mandates Reform Act of 1995

For purposes of the Unfunded Mandates Reform Act of 1995, as well as E.O. 12875, this rule does not include any Federal mandate that may result in increased expenditures by State, local, and tribal governments, or increased expenditures by the private sector of more than $100 million. MSHA is not aware of any State, local, or tribal government that either owns or operates underground coal mines.

Executive Order 13132

MSHA has reviewed this rule in accordance with Executive Order 13132 regarding federalism, and has determined that it does not have ''federalism implications.'' The rule does not ''have substantial direct effects on the States, on the relationship between the national government and the States, or on the distribution of power and responsibilities among the various levels of government.'' There are no underground coal mines or manufacturers of high-voltage longwall equipment owned or operated by any State governments.

Executive Order 13045

In accordance with Executive Order 13045, MSHA has evaluated the environmental health and safety effect of the final rule on children. The Agency has determined that the final rule will have no effect on children.

Executive Order 13084

In accordance with Executive Order 13084, MSHA certifies that the high-voltage longwall final rule does not impose substantial direct compliance costs on Indian tribal governments. MSHA is not aware of any Indian tribal governments which either own or operate underground coal mines or manufacturers high-voltage longwall equipment.

Executive Order 12630

This rule is not subject to Executive Order 12630, Governmental Actions and Interference with Constitutionally Protected Property Rights, because it does not involve implementation of a policy with takings implications.

Executive Order 12988

This regulation has been drafted and reviewed in accordance with Executive Order 12988, Civil Justice Reform, and will not unduly burden the Federal court system. The regulation has been written so as to minimize litigation and provide a clear legal standard for affected conduct, and has been reviewed carefully to eliminate drafting errors and ambiguities.

Executive Order 13211 (Energy)

In accordance with Executive Order 13211, MSHA has reviewed this final rule for its energy impacts. We have determined that the Executive Order does not apply to this final rule for the following reasons. One, this rulemaking is not considered a ''significant regulatory action'' under Executive Order 12866 and therefore the action does not meet the criteria listed in Executive Order 13211 requiring a Statement of Energy Effects. Two, the proposed rule was published before the effective date of the Executive Order. Three, MSHA has determined that this final rule will not have any adverse effects on energy supply, distribution, or use. To the contrary, as summarized in the economic analysis, MSHA expects accelerated coal production because of the implementation of this final rule. Therefore, no reasonable alternatives to this action are necessary.

List of Subjects

30 CFR Part 18

Approval regulations, Electric motor-driven mine equipment and accessories, Mine safety and health.

30 CFR Part 75

High-voltage longwall, Incorporation by reference, Mandatory safety standards, Mine safety and health, Underground coal mines.

Dated: February 25, 2002.

Dave D. Lauriski,

Assistant Secretary of Labor for Mine Safety and Health.

For the reasons set out in the preamble, chapter I of title 30 of the Code of Federal Regulations is amended as follows:

PART 18—ELECTRIC MOTOR-DRIVEN MINE EQUIPMENT AND ACCESSORIES

1. The authority citation for part 18 continues to read as follows:

Authority: 30 U.S.C. 957, 961.

2. Add § 18.53 to subpart B of part 18 to read as follows:

§ 18.53 High-voltage longwall mining systems.

(a) In each high-voltage motor-starter enclosure, with the exception of a controller on a high-voltage shearer, the disconnect device compartment, control/communications compartment, and motor contactor compartment must be separated by barriers or partitions to prevent exposure of personnel to energized high-voltage conductors or parts. In each motor-starter enclosure on a high-voltage shearer, the high-voltage components must be separated from lower voltage components by barriers or partitions to prevent exposure of personnel to energized high-voltage conductors or parts. Barriers or partitions must be constructed of grounded metal or nonconductive insulating board.

(b) Each cover of a compartment in the high-voltage motor-starter enclosure containing high-voltage components must be equipped with at least two interlock switches arranged to automatically deenergize the high-voltage components within that compartment when the cover is removed.

(c) Circuit-interrupting devices must be designed and installed to prevent automatic reclosure.

(d) Transformers with high-voltage primary windings that supply control voltages must incorporate grounded electrostatic (Faraday) shielding between the primary and secondary windings. The shielding must be connected to equipment ground by a minimum No. 12 AWG grounding conductor. The secondary nominal voltage must not exceed 120 volts, line to line.

(e) Test circuits must be provided for checking the condition of ground-wire monitors and ground-fault protection without exposing personnel to energized circuits. Each ground-test circuit must inject a primary current of 50 percent or less of the current rating of the grounding resistor through the current transformer and cause each corresponding circuit-interrupting device to open.

(f) Each motor-starter enclosure, with the exception of a controller on a high-voltage shearer, must be equipped with

a disconnect device installed to deenergize all high-voltage power conductors extending from the enclosure when the device is in the ''open'' position.

(1) When multiple disconnect devices located in the same enclosure are used to satisfy the above requirement they must be mechanically connected to provide simultaneous operation by one handle.

(2) The disconnect device must be rated for the maximum phase-to-phase voltage and the full-load current of the circuit in which it is located, and installed so that—

(i) Visual observation determines that the contacts are open without removing any cover;

(ii) The load-side power conductors are grounded when the device is in the ''open'' position;

(iii) The device can be locked in the ''open'' position;

(iv) When located in an explosion-proof enclosure, the device must be designed and installed to cause the current to be interrupted automatically prior to the opening of the contacts; and

(v) When located in a non-explosion-proof enclosure, the device must be designed and installed to cause the current to be interrupted automatically prior to the opening of the contacts, or the device must be capable of interrupting the full-load current of the circuit.

(g) Control circuits for the high-voltage motor starters must be interlocked with the disconnect device so that—

(1) The control circuit can be operated with an auxiliary switch in the ''test'' position only when the disconnect device is in the open and grounded position; and

(2) The control circuit can be operated with the auxiliary switch in the ''normal'' position only when the disconnect switch is in the closed position.

(h) A study to determine the minimum available fault current must be submitted to MSHA to ensure adequate protection for the length and conductor size of the longwall motor, shearer and trailing cables.

(i) Longwall motor and shearer cables with nominal voltages greater than 660 volts must be made of a shielded construction with a grounded metallic shield around each power conductor.

(j) High-voltage motor and shearer circuits must be provided with instantaneous ground-fault protection of not more than 0.125-amperes. Current transformers used for this protection must be of the single-window type and must be installed to encircle all three phase conductors.

(k) Safeguards against corona must be provided on all 4,160 voltage circuits in explosion-proof enclosures.

(l) The maximum pressure rise within an explosion-proof enclosure containing high-voltage switchgear must be limited to 0.83 times the design pressure.

(m) High-voltage electrical components located in high-voltage explosion-proof enclosures must not be coplanar with a single plane flame-arresting path.

(n) Rigid insulation between high-voltage terminals (Phase-to-Phase or Phase-to-Ground) must be designed with creepage distances in accordance with the following table:

MINIMUM CREEPAGE DISTANCES

Phase to phase voltage	Points of measure	Minimum creepage distances (inches) for comparative tracking index (CTI) range [1]			
		CTI≥500	380≤CTI<500	175≤CTI<380	CTI<175
2,400	Ø–Ø	1.50	1.95	2.40	2.90
	Ø–G	1.00	1.25	1.55	1.85
4,160	Ø–Ø	2.40	3.15	3.90	4.65
	Ø–G	1.50	1.95	2.40	2.90

[1] Assumes that all insulation is rated for the applied voltage or higher.

(o) Explosion-proof motor-starter enclosures must be designed to establish the minimum free distance (MFD) between the wall or cover of the enclosure and uninsulated electrical conductors inside the enclosure in accordance with the following table:

HIGH-VOLTAGE MINIMUM FREE DISTANCES (MFD)

Wall/cover thickness (in)	Steel MFD (in)			Aluminum MFD (in)		
	A [1]	B [2]	C [3]	A	B	C
¼	2.8	4.3	5.8	[4] NA	[4] NA	[4] NA
⅜	1.8	2.3	3.9	8.6	12.8	18.1
½	*1.2	2.0	2.7	6.5	9.8	13.0
⅝	*0.9	1.5	2.1	5.1	7.7	10.4
¾	*0.6	*1.1	1.6	4.1	6.3	8.6
1	(*)	*0.6	*1.0	2.9	4.5	6.2

Note *: The minimum electrical clearances must still be maintained.

[1] Column A specifies the MFD for enclosures that have available 3-phase bolted short-circuit currents of 10,000 amperes rms or less.

[2] Column B specifies the MFD for enclosures that have a maximum available 3-phase bolted short-circuit currents greater than 10,000 and less than or equal to 15,000 amperes rms.

[3] Column C specifies the MFD for enclosures that have a maximum available 3-phase bolted short-circuit currents greater than 15,000 and less than or equal to 20,000 amperes rms.

[4] Not Applicable—MSHA doesn't allow aluminum wall or covers to be ¼ inch or less in thickness (Section 18.31).

(1) For values not included in the table, the following formulas on which the table is based may be used to determine the minimum free distance.

(i) Steel Wall/Cover:

$$MFD = 2.296 \times 10^{-6} \frac{(35 + 105\ (C)\ (I_{sc})\ (t))}{(C)(d)} - \frac{d}{2}$$

(ii) Aluminum Wall/Cover:

$$MFD = 1.032 \times 10^{-5} \frac{(35 + 105\ (C)\ (I_{sc})\ (t))}{(C)(d)} - \frac{d}{2}$$

Where C is 1.4 for 2,400 volt systems or 3.0 for 4,160 volt systems, I_{sc} is the 3-phase short circuit current in amperes of the system, t is the clearing time in seconds of the outby circuit-interrupting device and d is the thickness in inches of the metal wall/cover adjacent to an area of potential arcing.

(2) The minimum free distance must be increased by 1.5 inches for 4,160 volt systems and 0.7 inches for 2,400 volt systems when the adjacent wall area is the top of the enclosure. If a steel shield is mounted in conjunction with an aluminum wall or cover, the thickness of the steel shield is used to determine the minimum free distances.

(p) The following static pressure test must be performed on each prototype design of explosion-proof enclosures containing high-voltage switchgear prior to the explosion tests. The static pressure test must also be performed on every explosion-proof enclosure containing high-voltage switchgear, at the time of manufacture, unless the manufacturer uses an MSHA accepted quality assurance procedure covering inspection of the enclosure. Procedures must include a detailed check of parts against the drawings to determine that the parts and the drawings coincide and that the minimum requirements stated in part 18 have been followed with respect to materials, dimensions, configuration and workmanship.

(1) *Test procedure.* (i) The enclosure must be internally pressurized to at least the design pressure, maintaining the pressure for a minimum of 10 seconds.

(ii) Following the pressure hold, the pressure must be removed and the pressurizing agent removed from the enclosure.

(2) *Acceptable performance.* (i) The enclosure during pressurization must not exhibit—

(A) Leakage through welds or casting; or

(B) Rupture of any part that affects the explosion-proof integrity of the enclosure.

(ii) The enclosure following removal of the pressurizing agents must not exhibit—

(A) Visible cracks in welds;

(B) Permanent deformation exceeding 0.040 inches per linear foot; or

(C) Excessive clearances along flame-arresting paths following retightening of fastenings, as necessary.

PART 75—MANDATORY SAFETY STANDARDS—UNDERGROUND COAL MINES

3. The authority citation for part 75 continues to read as follows:

Authority: 30 U.S.C. 811.

4. Amend § 75.2 by adding the following definitions:

§ 75.2 Definitions.

* * * * *

Adequate interrupting capacity. The ability of an electrical protective device, based upon its required and intended application, to safely interrupt values of current in excess of its trip setting or melting point.

* * * * *

Approval documentation. Formal papers issued by the Mine Safety and Health Administration which describe and illustrate the complete assembly of electrical machinery or accessories which have met the applicable requirements of 30 CFR part 18.

* * * * *

Circuit-interrupting device. A device designed to open and close a circuit by nonautomatic means and to open the circuit automatically at a predetermined overcurrent value without damage to the device when operated within its rating.

* * * * *

Ground fault or grounded phase. An unintentional connection between an electric circuit and the grounding system.

Motor-starter enclosure. An enclosure containing motor starting circuits and equipment.

Nominal voltage. The phase-to-phase or line-to-line root-mean-square value assigned to a circuit or system for designation of its voltage class, such as 480 or 4,160 volts. Actual voltage at which the circuit or system operates may vary from the nominal voltage within a range that permits satisfactory operation of equipment.

* * * * *

Short circuit. An abnormal connection of relatively low impedance, whether made accidentally or intentionally, between two points of different potential.

* * * * *

5. Part 75, Subpart I, Underground High-Voltage Distribution, is amended by adding §§ 75.813 through 75.822 and Appendix A under a new undesignated center heading, high-voltage longwalls, to read as follows:

Sec.

High-Voltage Longwalls

75.813 High-voltage longwalls; scope.
75.814 Electrical protection.
75.815 Disconnect devices.
75.816 Guarding of cables.
75.817 Cable handling and support systems.
75.818 Use of insulated cable handling equipment.
75.819 Motor-starter enclosures; barriers and interlocks.
75.820 Electrical work; troubleshooting and testing.
75.821 Testing, examination and maintenance.
75.822 Underground high-voltage longwall cables.
Appendix A to Subpart I—Diagrams of Inby and Outby Switching

* * * * *

High-Voltage Longwalls

§ 75.813 High-voltage longwalls; scope.

Sections 75.814 through 75.822 of this part are electrical safety standards that apply to high-voltage longwall circuits and equipment. All other existing standards in 30 CFR must also apply to these longwall circuits and equipment where appropriate.

§ 75.814 Electrical protection.

(a) High-voltage circuits must be protected against short circuits, overloads, ground faults, and undervoltages by circuit-interrupting devices of adequate interrupting capacity as follows:

(1) Current settings of short-circuit protective devices must not exceed the setting specified in approval documentation, or seventy-five percent of the minimum available phase-to-phase short-circuit current, whichever is less.

(2) Time-delay settings of short-circuit protective devices used to protect any cable extending from the section power center to a motor-starter enclosure must not exceed the settings specified in approval documentation, or 0.25-second, whichever is less. Time delay settings of short-circuit protective devices used to protect motor and shearer circuits must not exceed the settings specified in approval documentation, or 3 cycles, whichever is less.

(3) Ground-fault currents must be limited by a neutral grounding resistor to not more than—

(i) 6.5 amperes when the nominal voltage of the power circuit is 2,400 volts or less; or

(ii) 3.75 amperes when the nominal voltage of the power circuit exceeds 2,400 volts.

(4) High-voltage circuits extending from the section power center must be provided with—

(i) Ground-fault protection set to cause deenergization at not more than 40 percent of the current rating of the neutral grounding resistor;

(ii) A backup ground-fault detection device to cause deenergization when a ground fault occurs with the neutral grounding resistor open; and

(iii) Thermal protection for the grounding resistor that will deenergize the longwall power center if the resistor is subjected to a sustained ground fault. The thermal protection must operate at either 50 percent of the maximum temperature rise of the grounding resistor, or 150° C (302° F), whichever is less, and must open the ground-wire monitor circuit for the high-voltage circuit supplying the section power center. The thermal protection must not be dependent upon control power and may consist of a current transformer and overcurrent relay.

(5) High-voltage motor and shearer circuits must be provided with instantaneous ground-fault protection set at not more than 0.125-ampere.

(6) Time-delay settings of ground-fault protective devices used to provide coordination with the instantaneous ground-fault protection of motor and shearer circuits must not exceed 0.25-second.

(7) Undervoltage protection must be provided by a device which operates on loss of voltage to cause and maintain the interruption of power to a circuit to prevent automatic restarting of the equipment.

(b) Current transformers used for the ground-fault protection specified in paragraphs (a)(4)(i) and (5) of this section must be single window-type and must be installed to encircle all three phase conductors. Equipment safety grounding conductors must not pass through or be connected in series with ground-fault current transformers.

(c) Each ground-fault current device specified in paragraphs (a)(4)(i) and (5) of this section must be provided with a test circuit that will inject a primary current of 50 percent or less of the current rating of the grounding resistor through the current transformer and cause each corresponding circuit-interrupting device to open.

(d) Circuit-interrupting devices must not reclose automatically.

(e) Where two or more high-voltage cables are used to supply power to a common bus in a high-voltage enclosure, each cable must be provided with ground-wire monitoring. The ground-wire monitoring circuits must cause deenergization of each cable when either the ground-monitor or grounding conductor(s) of any cable become severed or open. On or after May 10, 2002, parallel connected cables on newly installed longwalls must be protected as follows:

(1) When one circuit-interrupting device is used to protect parallel connected cables, the circuit-interrupting device must be electrically interlocked with the cables so that the device will open when any cable is disconnected; or

(2) When two or more parallel circuit-interrupting devices are used to protect parallel connected cables, the circuit-interrupting devices must be mechanically and electrically interlocked. Mechanical interlocking must cause all devices to open simultaneously and electrical interlocking must cause all devices to open when any cable is disconnected.

§ 75.815 Disconnect devices.

(a) The section power center must be equipped with a main disconnecting device installed to deenergize all cables extending to longwall equipment when the device is in the ''open'' position. See Figures I–1 and I–2 in Appendix A to this subpart I.

(b) Disconnecting devices for motor-starter enclosures must be maintained in accordance with the approval requirements of paragraph (f) of § 18.53 of part 18 of this chapter. The compartment for the disconnect device must be provided with a caution label to warn miners against entering the compartment before deenergizing the incoming high-voltage circuits to the compartment.

(c) Disconnecting devices must be rated for the maximum phase-to-phase voltage of the circuit in which they are installed, and for the full-load current of the circuit that is supplied power through the device.

(d) Each disconnecting device must be designed and installed so that —

(1) Visual observation determines that the contacts are open without removing any cover;

(2) All load power conductors can be grounded when the device is in the ''open'' position; and

(3) The device can be locked in the ''open'' position.

(e) Disconnecting devices, except those installed in explosion-proof enclosures, must be capable of interrupting the full-load current of the circuit or designed and installed to cause the current to be interrupted automatically prior to the opening of the contacts of the device. Disconnecting devices installed in explosion-proof enclosures must be maintained in accordance with the approval requirements of paragraph (f)(2)(iv) of § 18.53 of part 18 of this chapter.

§ 75.816 Guarding of cables.

(a) High-voltage cables must be guarded at the following locations:

(1) Where persons regularly work or travel over or under the cables.

(2) Where the cables leave cable handling or support systems to extend to electric components.

(b) Guarding must minimize the possibility of miners contacting the cables and protect the cables from damage. The guarding must be made of grounded metal or nonconductive flame-resistant material.

§ 75.817 Cable handling and support systems.

Longwall mining equipment must be provided with cable-handling and support systems that are constructed, installed and maintained to minimize the possibility of miners contacting the cables and to protect the high-voltage cables from damage.

§ 75.818 Use of insulated cable handling equipment.

(a) Energized high-voltage cables must not be handled except when motor or shearer cables need to be trained. When cables need to be trained, high-voltage insulated gloves, mitts, hooks, tongs, slings, aprons, or other personal protective equipment capable of providing protection against shock hazard must be used to prevent direct contact with the cable.

(b) High-voltage insulated gloves, sleeves, and other insulated personal protective equipment must—

(1) Have a voltage rating of at least Class 1 (7,500 volts) that meets or

exceeds ASTM F496–97, ''Standard Specification for In-Service Care of Insulating Gloves and Sleeves'' (1997).

(2) Be examined before each use for visible signs of damage;

(3) Be removed from the underground area of the mine or destroyed when damaged or defective; and

(4) Be electrically tested every 6 months in accordance with publication ASTM F496–97. ASTM F496–97 (Standard Specification for In-Service Care of Insulating Gloves and Sleeves, 1997) is incorporated by reference and may be inspected at any Coal Mine Health and Safety District and Subdistrict Office, or at MSHA's Office of Standards, 4015 Wilson Boulevard, Arlington, VA., and at the Office of the Federal Register, 800 North Capitol Street, NW., Suite 700, Washington, DC. In addition, copies of the document can be purchased from the American Society for Testing and Materials, 100 Barr Harbor Drive, West Conshohocken, Pennsylvania 19428–2959. This incorporation by reference was approved by the Director of the Federal Register in accordance with 5 U.S.C. 552(a) and 1 CFR part 51.

§ 75.819 Motor-starter enclosures; barriers and interlocks.

Compartment separation and cover interlock switches for motor-starter enclosures must be maintained in accordance with the approval requirements of paragraphs (a) and (b) of § 18.53 of part 18 of this chapter.

§ 75.820 Electrical work; troubleshooting and testing.

(a) Electrical work on all circuits and equipment associated with high-voltage longwalls must be performed only by persons qualified under § 75.153 to perform electrical work on all circuits and equipment.

(b) Prior to performing electrical work, except for troubleshooting and testing of energized circuits and equipment as provided for in paragraph (d) of this section, a qualified person must do the following:

(1) Deenergize the circuit or equipment with a circuit-interrupting device.

(2) Open the circuit disconnecting device. On high-voltage circuits, ground the power conductors until work on the circuit is completed.

(3) Lock out the disconnecting device with a padlock. When more than one qualified person is performing work, each person must install an individual padlock.

(4) Tag the disconnecting device to identify each person working and the circuit or equipment on which work is being performed.

(c) Each padlock and tag must be removed only by the person who installed them, except that, if that person is unavailable at the mine, the lock and tag may be removed by a person authorized by the operator, provided—

(1) The authorized person is qualified under paragraph (a) of this section; and

(2) The operator ensures that the person who installed the lock and tag is aware of the removal before that person resumes work on the affected circuit or equipment.

(d) Troubleshooting and testing of energized circuits must be performed only—

(1) On low- and medium-voltage circuits;

(2) When the purpose of troubleshooting and testing is to determine voltages and currents; and

(3) By persons qualified to perform electrical work and who wear protective gloves on circuits that exceed 40 volts in accordance with the following table:

Circuit voltage	Type of glove required
Greater than 120 volts (nominal) (not intrinsically safe)	Rubber insulating gloves with leather protectors.
40 volts to 120 volts (nominal) (both intrinsically safe and non-intrinsically safe)	Either rubber insulating gloves with leather protectors or dry work gloves.
Greater than 120 volts (nominal) (intrinsically safe)	Either rubber insulating gloves with leather protectors or dry work gloves.

(4) Rubber insulating gloves must be rated at least for the nominal voltage of the circuit when the voltage of the circuit exceeds 120 volts nominal and is not intrinsically safe.

(e) Before troubleshooting and testing a low- or medium-voltage circuit contained in a compartment with a high-voltage circuit, the high-voltage circuit must be deenergized, disconnected, grounded, locked out and tagged in accordance with paragraph (b) of this section.

(f) Prior to the installation or removal of conveyor belt structure, high-voltage cables extending from the section power center to longwall equipment and located in the belt entries must be:

(1) Deenergized; or

(2) Guarded in accordance with § 75.816 of this part, at the location where the belt structure is being installed or removed; or

(3) Located at least 6.5 feet above the mine floor.

§ 75.821 Testing, examination and maintenance.

(a) At least once every 7 days, a person qualified in accordance with § 75.153 to perform electrical work on all circuits and equipment must test and examine each unit of high-voltage longwall equipment and circuits to determine that electrical protection, equipment grounding, permissibility, cable insulation, and control devices are being properly maintained to prevent fire, electrical shock, ignition, or operational hazards from existing on the equipment. Tests must include activating the ground-fault test circuit as required by § 75.814(c).

(b) Each ground-wire monitor and associated circuits must be examined and tested at least once each 30 days to verify proper operation and that it will cause the corresponding circuit-interrupting device to open.

(c) When examinations or tests of equipment reveal a fire, electrical shock, ignition, or operational hazard, the equipment must be removed from service immediately or repaired immediately.

(d) At the completion of examinations and tests required by this section, the person who makes the examinations and tests must certify by signature and date that they have been conducted. A record must be made of any unsafe condition found and any corrective action taken. Certifications and records must be kept for at least one year and must be made available for inspection by authorized representatives of the Secretary and representatives of miners.

§ 75.822 Underground high-voltage longwall cables.

In addition to the high-voltage cable design specifications in § 75.804 of this part, high-voltage cables for use on longwalls may be a type SHD cable with a center ground-check conductor no smaller than a No. 16 AWG stranded conductor. The cables must be MSHA accepted as flame-resistant under part 18 or approved under subpart K of part 7.

§ 75.1002–1 [Removed]

6. Remove § 75.1002–1.

7. Revise § 75.1002 to read as follows:

§ 75.1002 Installation of electric equipment and conductors; permissibility.

(a) Electric equipment must be permissible and maintained in a permissible condition when such equipment is located within 150 feet of pillar workings or longwall faces.

(b) Electric conductors and cables installed in or inby the last open crosscut or within 150 feet of pillar workings or longwall faces must be—

(1) Shielded high-voltage cables supplying power to permissible longwall equipment;

(2) Interconnecting conductors and cables of permissible longwall equipment;

(3) Conductors and cables of intrinsically safe circuits; and

(4) Cables and conductors supplying power to low- and medium-voltage permissible equipment.

BILLING CODE 4510–43–P

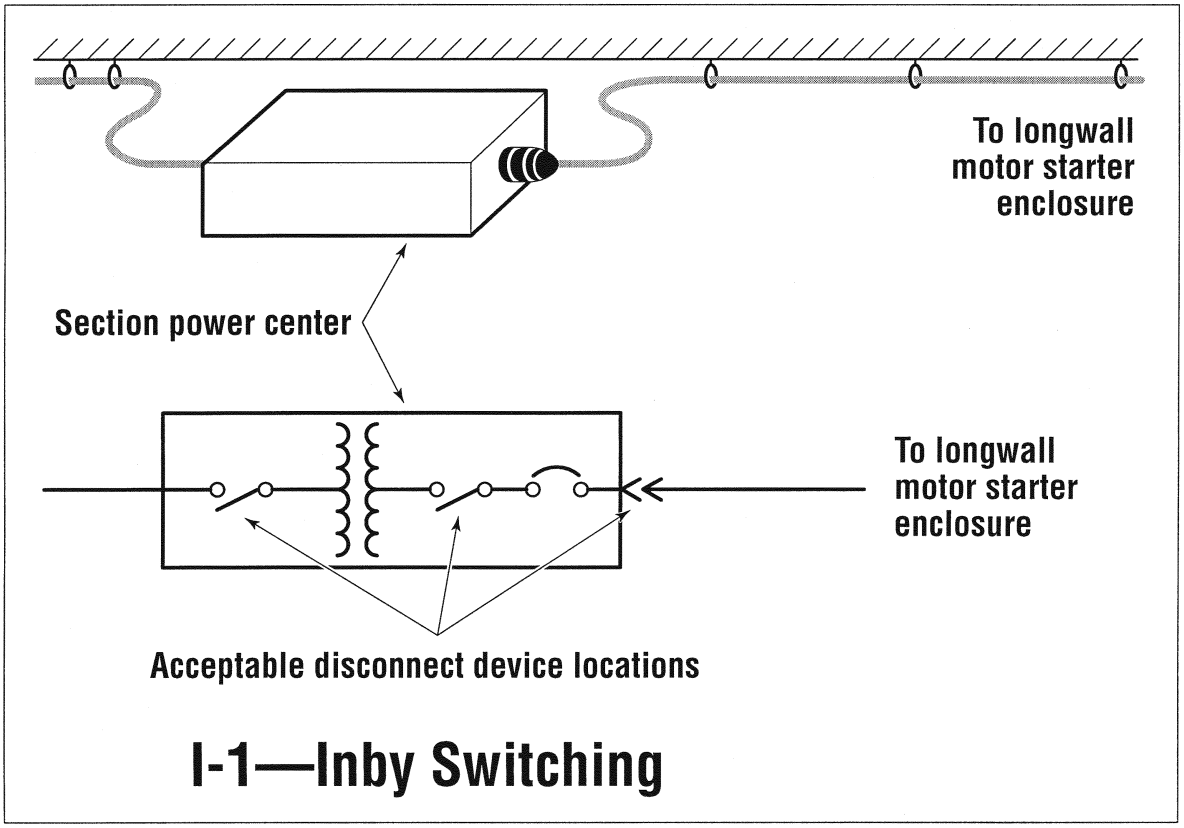

I-1—Inby Switching

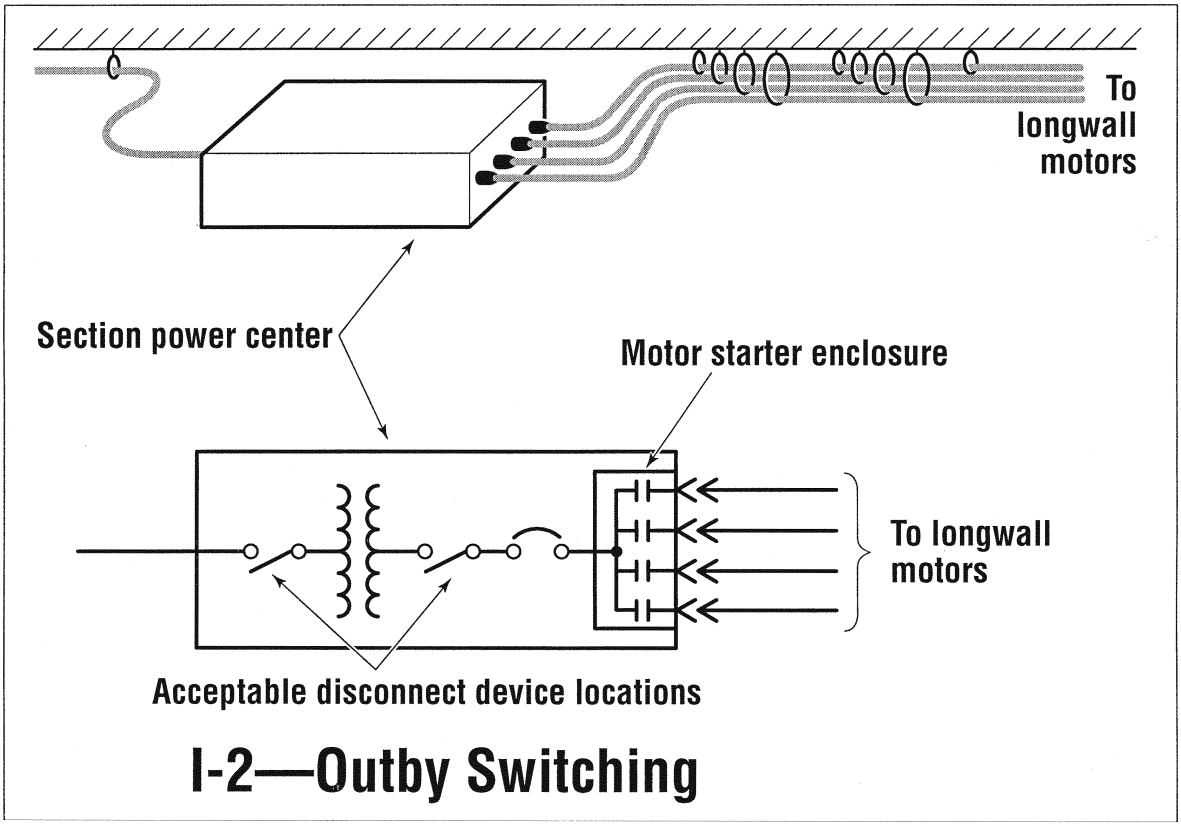

I-2—Outby Switching

[FR Doc. 02–4863 Filed 3–8–02; 8:45 am]
BILLING CODE 4510–43–C

Federal Register

Monday,
March 11, 2002

Part III

Environmental Protection Agency

40 CFR Part 721

Perfluoroalkyl Sulfonates; Significant New Use Rule; Final Rule and Supplemental Proposed Rule

ENVIRONMENTAL PROTECTION AGENCY

40 CFR Part 721

[OPPTS–50639D; FRL–6823–6]

RIN 2070–AD43

Perfluoroalkyl Sulfonates; Significant New Use Rule

AGENCY: Environmental Protection Agency (EPA).

ACTION: Final rule.

SUMMARY: EPA is issuing a significant new use rule (SNUR) under section 5(a)(2) of the Toxic Substances Control Act (TSCA) for 13 chemicals, including polymers, that are derived from perfluorooctanesulfonic acid (PFOSH) and its higher and lower homologues. These chemicals are collectively referred to as perfluoroalkyl sulfonates, or PFAS. This rule requires manufacturers and importers to notify EPA at least 90 days before commencing the manufacture or import of these chemical substances for the significant new uses described in this document. EPA believes that this action is necessary because the PFAS component of these chemical substances may be hazardous to human health and the environment. The required notice will provide EPA with the opportunity to evaluate an intended new use and associated activities and, if necessary, to prohibit or limit that activity before it occurs. This action promulgates a portion of the proposed SNUR originally published in the **Federal Register** of October 18, 2000. This action also removes from the SNUR two chemicals that were listed erroneously in that original proposal. Published elsewhere in today's issue of the **Federal Register** is a supplemental proposed rule which addresses the remainder of the chemicals listed in the original proposed SNUR.

DATES: This final rule is effective on April 10, 2002.

FOR FURTHER INFORMATION CONTACT: *For general information contact*: Barbara Cunningham, Acting Director, Environmental Assistance Division (7408M), Office of Pollution Prevention and Toxics, Environmental Protection Agency, 1200 Pennsylvania Ave., NW., Washington, DC 20460; telephone number: (202) 554–1404; e-mail address: TSCA-Hotline@epa.gov.

For technical information contact: Mary F. Dominiak, Chemical Control Division, (7405M), Office of Pollution Prevention and Toxics, Environmental Protection Agency, 1200 Pennsylvania Ave., NW., Washington, DC 20460; telephone number: (202) 564–8104; e-mail address: dominiak.mary@epa.gov.

SUPPLEMENTARY INFORMATION:

I. General Information

A. Does this Action Apply to Me?

You may be potentially affected by this action if you manufacture (defined by statute to include import) any of the chemical substances that are listed in Table 2 of this unit. Persons who intend to import any chemical substance governed by a final SNUR are subject to the TSCA section 13 (15 U.S.C. 2612) import certification requirements, and to the regulations codified at 19 CFR 12.118 through 12.127 and 12.728. Those persons must certify that they are in compliance with the SNUR requirements. The EPA policy in support of import certification appears at 40 CFR part 707, subpart B. In addition, any persons who export or intend to export any of the chemical substances listed in Table 2 of this unit are subject to the export notification provisions of TSCA section 12(b) (15 U.S.C. 2611(b)), and must comply with the export notification requirements in 40 CFR 721.20 and 40 CFR part 707, subpart D. Potentially affected categories and entities may include, but are not limited to:

TABLE 1.—POTENTIALLY AFFECTED ENTITIES

Categories	NAICS codes	Examples of potentially affected entities
Chemical Manufacturers or Importers	325	Persons who manufacture (defined by statute to include import) one or more of the subject chemical substances
Chemical Exporters	325	Persons who export, or intend to export, one or more of the subject chemical substances

This listing is not intended to be exhaustive, but rather provides a guide for readers regarding entities likely to be affected by this action. Other types of entities not listed in the table in this unit could also be affected. The North American Industrial Classification System (NAICS) codes have been provided to assist you and others in determining whether or not this action applies to certain entities. To determine whether you or your business is affected by this action, you should carefully examine the applicability provisions in 40 CFR 721.5 for SNUR-related obligations. Also, consult Unit II. Note that because this rule designates certain manufacturing and importing activities as significant new uses, persons that solely process existing stocks of the chemical substances that are covered by this action would not be subject to the rule. If you have any questions regarding the applicability of this action to a particular entity, consult the technical person listed under **FOR FURTHER INFORMATION CONTACT**.

One chemical in Table 2 of this unit is identified by both premanufacture notice (PMN) and Chemical Abstract Service number (CAS No.). In the proposed SNUR, only the PMN appeared with the chemical.

TABLE 2.—CHEMICAL SUBSTANCES COVERED BY THIS FINAL RULE

CAS No./PMN	CAS Ninth Collective Index Name
2250–98–8	1-Octanesulfonamide, N,N',N''-[phosphinylidynetris(oxy-2,1-ethanediyl)]tris[N-ethyl-1,1,2,2,3,3,4,4,5,5,6,6,7,7,8,8,8-heptadecafluoro-
30381–98–7	1-Octanesulfonamide, N,N'-[phosphinicobis(oxy-2,1-ethanediyl)]bis[N-ethyl-1,1,2,2,3,3,4,4,5,5,6,6,7,7,8,8,8-heptadecafluoro-, ammonium salt

TABLE 2.—CHEMICAL SUBSTANCES COVERED BY THIS FINAL RULE—Continued

CAS No./PMN	CAS Ninth Collective Index Name
57589–85-2	Benzoic acid, 2,3,4,5-tetrachloro-6-[[[3-[[(heptadecafluorooctyl)sulfonyl]oxy]phenyl]amino]carbonyl]-, monopotassium salt
61660–12-6	1-Octanesulfonamide, N-ethyl-1,1,2,2,3,3,4,4,5,5,6,6,7,7,8,8,8-heptadecafluoro-N-[3-(trimethoxysilyl)propyl]-
67969–69-1	1-Octanesulfonamide, N-ethyl-1,1,2,2,3,3,4,4,5,5,6,6,7,7,8,8,8-heptadecafluoro-N-[2-(phosphonooxy)ethyl]-, diammonium salt
68608–14-0	Sulfonamides, C4-8-alkane, perfluoro, N-ethyl-N-(hydroxyethyl), reaction products with 1,1'-methylenebis[4-isocyanatobenzene]
70776–36-2	2-Propenoic acid, 2-methyl-, octadecyl ester, polymer with 1,1-dichloroethene, 2-[[(heptadecafluorooctyl)sulfonyl]methylamino]ethyl 2-propenoate, N-(hydroxymethyl)-2-propenamide, 2-[methyl[(nonafluorobutyl)sulfonyl]amino]ethyl 2-propenoate, 2-[methyl[(pentadecafluoroheptyl)sulfonyl]amino]ethyl 2-propenoate, 2-[methyl[(tridecafluorohexyl)sulfonyl]amino]ethyl 2-propenoate and 2-[methyl[(undecafluoropentyl)sulfonyl]amino]ethyl 2-propenoate
127133–66–8	2-Propenoic acid, 2-methyl-, polymers with Bu methacrylate, lauryl methacrylate and 2-[methyl[(perfluoro-C4-8-alkyl)sulfonyl]amino]ethyl methacrylate
148240–78–2	Fatty acids, C18-unsatd., trimers, 2-[[(heptadecafluorooctyl)sulfonyl]methylamino]ethyl esters
148684–79–1	Sulfonamides, C4-8-alkane, perfluoro, N-(hydroxyethyl)-N-methyl, reaction products with 1,6-diisocyanatohexane homopolymer and ethylene glycol
178535–22–3	Sulfonamides, C4-8-alkane, perfluoro, N-ethyl-N-(hydroxyethyl)-, polymers with 1,1'-methylenebis[4-isocyanatobenzene] and polymethylenepolyphenylene isocyanate, 2-ethylhexyl esters, Me Et ketone oxime-blocked
P–94–2205	Polymethylenepolyphenylene isocyanate and bis(4-NCO-phenyl)methane reaction products with 2-ethyl-1-hexanol, 2-butanone, oxime, N-ethyl-N-(2- hydroxyethyl)-1-C4-C8 perfluoroalkanesulfonamide
P–96–1645 306974–63–0	Fatty acids, C18-unsatd., dimers, 2-[methyl[(perfluoro-C4-8-alkyl)sulfonyl]amino]ethyl esters

B. How Can I Get Additional Information, Including Copies of this Document or Other Related Documents?

1. *Electronically*. You may obtain electronic copies of this document, and certain other related documents that might be available electronically, from the EPA Internet Home Page at *http://www.epa.gov/*. To access this document, on the Home Page select ''Laws and Regulations,'' ''Regulations and Proposed Rules,'' and then look up the entry for this document under the ''**Federal Register**—Environmental Documents.'' You can also go directly to the **Federal Register** listings at *http://www.epa.gov/fedrgstr/*.

2. *In person*. The Agency has established an official record for this action under docket control number OPPTS–50639D. The official record consists of the documents specifically referenced in this action, any public comments received during an applicable comment period, and other information related to this action, including any information claimed as Confidential Business Information (CBI). This official record includes the documents that are physically located in the docket, as well as the documents that are referenced in those documents. The public version of the official record does not include any information claimed as CBI. The public version of the official record, which includes printed, paper versions of any electronic comments submitted during an applicable comment period, is available for inspection in the TSCA Nonconfidential Information Center, North East Mall Rm. B–607, Waterside Mall, 401 M St., SW., Washington, DC. The Center is open from noon to 4 p.m., Monday through Friday, excluding legal holidays. The telephone number for the Center is (202) 260–7099.

II. Background

A. What Action is the Agency Taking?

This rule requires persons to notify EPA at least 90 days before commencing the manufacture or import of the chemical substances identified in Table 2, Unit I.A., for the significant new use described in this document. The chemical substances identified in Table 2, Unit I.A., are 13 chemical substances, including polymers, that are derived from PFOSH and its homologues. These chemical substances are collectively referred to throughout this rule as PFAS. In the original proposed SNUR, these chemicals had been referred to collectively as perfluorooctyl sulfonates, or PFOS, but commenters noted that this generic usage of the term PFOS was inconsistent with the use by the manufacturer, the Minnesota Mining and Manufacturing Company (3M), of PFOS to refer only to chemicals with an eight-carbon, or C8, chain length. Many of the chemicals in the SNUR include a range of carbon chain lengths, although they all include C8 within the range. Accordingly, EPA will use the generic term PFAS to refer to any carbon chain length, including higher and lower homologues as well as C8, and the term PFOS to represent only those chemical substances which are predominantly C8.

The significant new use described by this document is: The manufacture or import for any use of any of the chemicals listed in Table 2, Unit I.A., on or after January 1, 2001.

The chemical substances subject to this SNUR are listed in Table 2, Unit I.A. All of these chemical substances have the potential to degrade to PFOSH in the environment. Information also suggests that these chemical substances may be converted to PFOSH via incomplete oxidation during the

incineration of PFOS-containing materials. Once PFOSH has been released to the environment, it does not undergo further chemical (hydrolysis), microbial, or photolytic degradation. PFOS is highly persistent in the environment and has a strong tendency to bioaccumulate. Studies have found PFOS in very small quantities in the blood of the general human population as well as in wildlife, indicating that exposure to the chemicals is widespread, and recent tests have raised concerns about their potential developmental, reproductive, and systemic toxicity (Refs. 1, 2, and 3). These facts, taken together, raise concerns for long term potential adverse effects in people and wildlife over time if PFOS should continue to be produced, released, and built up in the environment.

Based on all information available to EPA, including the comments filed on the proposed SNUR published in the **Federal Register** of October 18, 2000 (65 FR 62319) (FRL–6745–5), EPA believes that the chemical substances listed in Table 2, Unit I.A., were manufactured and imported in the United States only by 3M (Refs. 4 and 5). 3M committed to phase out these chemicals voluntarily by discontinuing their manufacture on a global basis by the end of December 2000, and 3M has confirmed that these chemicals were discontinued on schedule (Refs. 6 and 7). EPA believes that any manufacture or import for any use of these specific PFAS chemicals occurring after 3M's phase-out would thus be new. All manufactured PFAS has the potential to contribute to the globally available reservoir of PFAS that has resulted in the detectable levels of PFOS in the general population and wildlife. Any new manufacture or import of the PFAS chemicals listed in this rule, particularly for their historical, high volume uses, would significantly increase the magnitude and duration of exposure to these chemicals by adding to the existing burden of PFOS in the environment.

The chemical substances listed in Table 2, Unit I.A., were principally associated with uses in carpet, fabric, leather, textile, and paper coatings. None of the comments received on the proposed SNUR addressed any of these uses or focused on these particular substances. Although certain initial comments filed on the proposed SNUR sought blanket exemptions for specific uses of any chemical substances listed in the proposed SNUR, including the ones covered by this final rule, subsequent clarifications and additional correspondence submitted to the docket by the commenters indicated that none of the chemical substances listed in Table 2, Unit I.A., were or are being manufactured for, imported, or used in any of the specific uses for which they sought an exemption.

This action also removes from the original proposed SNUR two chemicals which were not included in the 3M phaseout plan. These two chemicals (CAS No. 148240–79–3 and CAS No. 148240–81–7) were listed in the originally proposed SNUR due to an error by EPA in correlating information provided by 3M with chemical identity data furnished by the Chemical Abstract Service. Comments submitted by 3M pointed out this error. EPA acknowledges that, because these two chemicals were not included in the 3M phaseout plan, they should not have been included in the original proposed SNUR. Accordingly, these two chemicals are not subject to any current proposed or final SNUR, and thus would not be subject to any corresponding SNUR-related reporting obligations.

Other chemicals originally included in the two tables in the proposed SNUR are addressed separately in a supplemental proposed SNUR published elsewhere in today's issue of the **Federal Register**. This final rule applies only to the specific chemical substances listed in Table 2, Unit I.A., on which no comments were received.

B. What is the Agency's Authority for Taking this Action?

Section 5(a)(2) of TSCA (15 U.S.C. 2604(a)(2)) authorizes EPA to determine that a use of a chemical substance is a ''significant new use.'' The Agency makes this determination by rule after considering all relevant factors, including those listed in TSCA section 5(a)(2). These factors include the volume of a chemical substance's production; the extent to which a use changes the type, form, magnitude, or duration of exposure to the substance; and the reasonably anticipated manner of producing or otherwise managing the substance. Once EPA makes this determination and promulgates a SNUR, TSCA section 5(a)(1)(B) requires persons to submit a significant new use notice (SNUN) to EPA at least 90 days before they manufacture, import, or process the chemical substance for that significant new use (15 U.S.C. 2604 (a)(1)(B)).

With respect to the chemical substances listed in Table 2, Unit I.A., all production had ceased on or before December 31, 2000, as discussed in Unit II.A. Any new manufacture or import for any use following that date would thus significantly change the volume of production, which was zero. By adding to the base amount of PFOS already detected in the environment around the world, any new manufacture or import for any use of these substances would also change the magnitude and duration of exposure to PFOS, because PFOS has been found to be both persistent and bioaccumulative. No comments submitted on the proposed SNUR suggested that these specific substances might be produced or managed any differently than they were in the past if they were to be produced again, particularly for their former uses, leading to the reasonable inference that any new manufacture or importation of these substances for any use would present hazard, exposure, and release concerns similar to those which prompted the promulgation of this SNUR. Accordingly, pursuant to TSCA section 5(a)(1)(B), EPA requires persons to submit a SNUN to EPA at least 90 days before they manufacture or import the chemical substances listed in Table 2 for any use (15 U.S.C. 2604 (a)(1)(B)).

As noted in the proposed SNUR, EPA believes that the intent of TSCA section 5(a)(1)(B) is best served by designating a use as a significant new use as of the proposal date of the SNUR, rather than as of the effective date of the final rule. If uses begun after publication of the proposed SNUR were considered to be ongoing, rather than new, it would be difficult for EPA to establish SNUR notice requirements, because any person could defeat the SNUR by initiating the proposed significant new use before the rule became final, and then argue that the use was ongoing.

Accordingly, persons who may have begun commercial manufacture or import of the PFAS chemicals listed in Table 2, Unit I.A., for the significant new uses listed in this final SNUR after the proposal was published on October 18, 2000, must stop that activity before the effective date of this final rule. Persons who ceased those activities will have to meet all SNUR notice requirements and wait until the end of the notice review period, including all extensions, before engaging in any activities designated as significant new uses. If, however, persons who may have begun commercial manufacture or import of these chemical substances between the proposal and the effective date of the SNUR meet the conditions of advance compliance as codified at 40 CFR 721.45(h), those persons will be considered to have met the final SNUR requirements for those activities.

III. References

These references have been placed in the official record that was established under docket control number OPPTS–

50639 for this rulemaking as indicated in Unit I.B.2. Reference documents identified with an Administrative Record number (AR) are cross-indexed to non-regulatory, publicly accessible information files maintained in the TSCA Nonconfidential Information Center. Copies of these documents can be obtained as described in Unit I.B.2.

1. (AR226–0620) Sulfonated Perfluorochemicals in the Environment: Sources, Dispersion, Fate, and Effects. 3M. St. Paul, MN. March 1, 2000.

2. (AR226–0547) The Science of Organic Fluorochemistry. 3M. St. Paul, MN. February 5, 1999.

3. (AR226–0548) Perfluorooctane Sulfonate: Current Summary of Human Sera, Health and Toxicology Data. 3M. St. Paul, MN. January 21, 1999.

4. (AR226–0550) Fluorochemical Use, Distribution, and Release Overview. 3M. St. Paul, MN. May 26, 1999.

5. Rice, Cody. Domestic Manufacturers or Importers of PFOS Chemicals Other Than 3M. USEPA/OPPT/EETD. Washington, DC. August 31, 2000.

6. (AR226–0600) Weppner, William A. Phase-out Plan for POSF-Based Products. 3M. St. Paul, MN. July 7, 2000.

7. (AR226–0997) Santoro, Mike. E-mail to Charles Auer, Production of PFOS Derivatives. 3M. St. Paul, MN. March 2, 2001.

IV. Regulatory Assessment Requirements

Under Executive Order 12866, entitled *Regulatory Planning and Review* (58 FR 51735, October 4, 1993), the Office of Management and Budget (OMB) has determined that SNURs are not a ''significant regulatory action'' subject to review by OMB, because SNURs do not meet the criteria in section 3(f) of the Executive order.

Based on EPA's experience with past SNURs, State, local, and tribal governments have not been impacted by these rules, and EPA does not have any reasons to believe that any State, local, or tribal government will be impacted by this rule. As such, EPA has determined that this regulatory action does not impose any enforceable duty, contain any unfunded mandate, or otherwise have any effect on small governments subject to the requirements of sections 202, 203, 204, or 205 of the Unfunded Mandates Reform Act of 1995 (UMRA) (Public Law 104–4).

This rule does not have tribal implications because it is not expected to have substantial direct effects on Indian Tribes. This does not significantly or uniquely affect the communities of Indian tribal governments, nor does it involve or impose any requirements that affect Indian Tribes. Accordingly, the requirements of section 3(b) of Executive Order 13084, entitled *Consultation and Coordination with Indian Tribal Governments* (63 FR 276755, May 19, 1998), do not apply to this rule. Executive Order 13175, entitled *Consultation and Coordination with Indian Tribal Governments* (65 FR 67249, November 6, 2000), which took effect on January 6, 2001, revokes Executive Order 13084 as of that date. EPA developed this rulemaking, however, during the period when Executive Order 13084 was in effect; thus, EPA addressed tribal considerations under Executive Order 13084. For the same reasons stated for Executive Order 13084, the requirements of Executive Order 13175 do not apply to this rule either. Nor will this action have a substantial direct effect on States, on the relationship between the national government and the States, or on the distribution of power and responsibilities among the various levels of government, as specified in Executive Order 13132, entitled *Federalism* (64 FR 43255, August 10, 1999).

This rule is not subject to Executive Order 13211, entitled *Actions Concerning Regulations That Significantly Affect Energy Supply, Distribution, or Use* (66 FR 28355, May 22, 2001), because this action is not expected to affect energy supply, distribution, or use.

In issuing this rule, EPA has taken the necessary steps to eliminate drafting errors and ambiguity, minimize potential litigation, and provide a clear legal standard for affected conduct, as required by section 3 of Executive Order 12988, entitled *Civil Justice Reform* (61 FR 4729, February 7, 1996).

EPA has complied with Executive Order 12630, entitled *Governmental Actions and Interference with Constitutionally Protected Property Rights* (53 FR 8859, March 15, 1988), by examining the takings implications of this rule in accordance with the ''Attorney General's Supplemental Guidelines for the Evaluation of Risk and Avoidance of Unanticipated Takings'' issued under the Executive Order.

This action does not involve special considerations of environmental justice related issues as required by Executive Order 12898, entitled *Federal Actions to Address Environmental Justice in Minority Populations and Low-Income Populations* (59 FR 7629, February 16, 1994).

This action is not subject to Executive Order 13045, entitled *Protection of Children from Environmental Health Risks and Safety Risks* (62 FR 19885, April 23, 1997), because this is not an economically significant regulatory action as defined by Executive Order 12866, and this action does not address environmental health or safety risks disproportionately affecting children.

In addition, since this action does not involve any technical standards, section 12(d) of the National Technology Transfer and Advancement Act of 1995 (NTTAA), Public Law 104–113, section 12(d) (15 U.S.C. 272 note), does not apply to this action.

Pursuant to section 605(b) of the Regulatory Flexibility Act (RFA) (5 U.S.C. 601 *et seq.*), the Agency hereby certifies that promulgation of this SNUR will not have a significant adverse economic impact on a substantial number of small entities. A SNUR applies to any person (including small or large entities) who intends to engage in any activity described in the rule as a ''significant new use.'' By definition of the word ''new,'' and based on all information currently available to EPA, it appears that no small or large entities currently engage in such activity. Since a SNUR requires merely that any person who intends to engage in such activity in the future must first notify EPA (by submitting a SNUN), no economic impact will even occur until someone decides to engage in those activities. As a voluntary action, it is reasonable to presume that this decision would be based on a determination by the person submitting the SNUN that the potential benefits would outweigh the costs. Although some small entities may decide to conduct such activities in the future, EPA cannot presently determine how many, if any, there may be. EPA's experience to date is that, in response to the promulgation of over 530 SNURs, the Agency has received fewer than 15 SNUNs. Of those SNUNs submitted, none appear to be from small entities. In fact, EPA expects to receive few, if any, SNUNs from either large or small entities in response to any SNUR. Therefore, EPA believes that the economic impact of complying with a SNUR is not expected to be significant or adversely impact a substantial number of small entities. This rationale has been provided to the Chief Counsel for Advocacy of the Small Business Administration.

According to the Paperwork Reduction Act (PRA), 44 U.S.C. 3501 *et seq.*, an agency may not conduct or sponsor, and a person is not required to respond to a collection of information that requires OMB approval under the

PRA, unless it has been approved by OMB and displays a currently valid OMB control number. The OMB control numbers for EPA's regulations, after initial display in the **Federal Register** and in addition to its display on any related collection instrument, are listed in 40 CFR part 9.

The information collection requirements related to this action have already been approved by OMB pursuant to the PRA under OMB control number 2070–0038 (EPA ICR No. 1188.06). This action does not impose any burden requiring additional OMB approval. If an entity were to submit a SNUN to the Agency, the annual burden is estimated to average between 98.96 and 118.92 hours per response at an estimated reporting cost of between $5,957 and $7,192 per SNUN. This burden estimate includes the time needed to review instructions, search existing data sources, gather and maintain the data needed, and complete, review and submit the required SNUN, and maintain the required records. This burden estimate does not include 1 hour of technical time at $64.30 per hour estimated to be required for customer notification of SNUR requirements, or the $2,500 user fee for submission of a SNUN ($100 for businesses with less than $40 million in annual sales).

Send any comments about the accuracy of the burden estimate, and any suggested methods for minimizing respondent burden, including through the use of automated collection techniques to the Director, Collection Strategies Division, Office of Environmental Information, Environmental Protection Agency (2822), 1200 Pennsylvania Ave., NW., Washington, DC 20460. Please remember to include the OMB control number in any correspondence, but do not submit any completed forms to this address.

V. Submission to Congress and the Comptroller General

The Congressional Review Act, 5 U.S.C. 801 *et seq.*, as added by the Small Business Regulatory Enforcement Fairness Act of 1996, generally provides that before a rule may take effect, the Agency promulgating the rule must submit a rule report, which includes a copy of the rule, to each House of the Congress and the Comptroller General of the United States. EPA will submit a report containing this rule and other required information to the U.S. Senate, the U.S. House of Representatives, and the Comptroller General of the United States prior to publication of the rule in the **Federal Register**. This rule is not a ''major rule'' as defined by 5 U.S.C. 804(2).

List of Subjects in 40 CFR Part 721

Environmental protection, Chemicals, Hazardous materials, Reporting and recordkeeping requirements, Significant new uses.

Dated: March 4, 2002.

William H. Sanders, III,

Director, Office of Pollution Prevention and Toxics.

Therefore, 40 CFR chapter I is amended as follows:

PART 721—[AMENDED]

1. The authority citation for part 721 continues to read as follows:

Authority: 15 U.S.C. 2604, 2607, and 2625(c).

2. By adding new § 721.9582 to subpart E to read as follows:

§ 721.9582 Certain perfluoroalkyl sulfonates.

(a) *Chemical substances and significant new uses subject to reporting.* (1) The chemical substances listed in Table 1 of this paragraph are subject to reporting under this section for the significant new uses described in paragraph (a)(2) of this section.

TABLE 1.—PFAS CHEMICALS SUBJECT TO REPORTING ON OR AFTER JANUARY 1, 2001

CAS No./PMN	CAS Ninth Collective Index Name
2250–98–8	1-Octanesulfonamide, N,N',N''-[phosphinylidynetris(oxy-2,1-ethanediyl)]tris[N-ethyl-1,1,2,2,3,3,4,4,5,5,6,6,7,7,8,8,8-heptadecafluoro-
30381–98–7	1-Octanesulfonamide, N,N'-[phosphinicobis(oxy-2,1-ethanediyl)]bis[N-ethyl-1,1,2,2,3,3,4,4,5,5,6,6,7,7,8,8,8-heptadecafluoro-, ammonium salt
57589–85–2	Benzoic acid, 2,3,4,5-tetrachloro-6-[[[3-[[(heptadecafluorooctyl)sulfonyl]oxy]phenyl]amino]carbonyl]-, monopotassium salt
61660–12–6	1-Octanesulfonamide, N-ethyl-1,1,2,2,3,3,4,4,5,5,6,6,7,7,8,8,8-heptadecafluoro-N-[3-(trimethoxysilyl)propyl]-
67969–69–1	1-Octanesulfonamide, N-ethyl-1,1,2,2,3,3,4,4,5,5,6,6,7,7,8,8,8-heptadecafluoro-N-[2-(phosphonooxy)ethyl]-, diammonium salt
68608–14–0	Sulfonamides, C4-8-alkane, perfluoro, N-ethyl-N-(hydroxyethyl), reaction products with 1,1'-methylenebis[4-isocyanatobenzene]
70776–36–2	2-Propenoic acid, 2-methyl-, octadecyl ester, polymer with 1,1-dichloroethene, 2-[[(heptadecafluorooctyl)sulfonyl]methylamino]ethyl 2-propenoate, N-(hydroxymethyl)-2-propenamide, 2-[methyl[(nonafluorobutyl)sulfonyl]amino]ethyl 2-propenoate, 2-[methyl[(pentadecafluoroheptyl)sulfonyl]amino]ethyl 2-propenoate, 2-[methyl[(tridecafluorohexyl)sulfonyl]amino]ethyl 2-propenoate and 2-[methyl[(undecafluoropentyl)sulfonyl]amino]ethyl 2-propenoate
127133–66–8	2-Propenoic acid, 2-methyl-, polymers with Bu methacrylate, lauryl methacrylate and 2-[methyl[(perfluoro-C4-8-alkyl)sulfonyl]amino]ethyl methacrylate
148240–78–2	Fatty acids, C18-unsatd., trimers, 2-[[(heptadecafluorooctyl)sulfonyl]methylamino]ethyl esters
148684–79–1	Sulfonamides, C4-8-alkane, perfluoro, N-(hydroxyethyl)-N-methyl, reaction products with 1,6-diisocyanatohexane homopolymer and ethylene glycol

TABLE 1.—PFAS CHEMICALS SUBJECT TO REPORTING ON OR AFTER JANUARY 1, 2001—Continued

CAS No./PMN	CAS Ninth Collective Index Name
178535–22–3	Sulfonamides, C4-8-alkane, perfluoro, N-ethyl-N-(hydroxyethyl)-, polymers with 1,1'-methylenebis[4-isocyanatobenzene] and polymethylenepolyphenylene isocyanate, 2-ethylhexyl esters, Me Et ketone oxime-blocked
P–94–2205	Polymethylenepolyphenylene isocyanate and bis(4-NCO-phenyl)methane reaction products with 2-ethyl-1-hexanol, 2-butanone, oxime, N-ethyl-N-(2- hydroxyethyl)-1-C4-C8 perfluoroalkanesulfonamide
P–96–1645 306974–63–0	Fatty acids, C18-unsatd., dimers, 2-[methyl[(perfluoro-C4-8-alkyl)sulfonyl]amino]ethyl esters

(2) The significant new uses are:

(i) Any manufacture or import for any use of any chemical listed in Table 1 of paragraph (a)(1) of this section on or after January 1, 2001.

(ii) [Reserved]

(b) [Reserved]

[FR Doc. 02–5746 Filed 3–8–02; 8:45 am]

BILLING CODE 6560–50–S

Federal Register

Monday,
March 11, 2002

Part III

Environmental Protection Agency

40 CFR Part 721

Perfluoroalkyl Sulfonates; Significant New Use Rule; Final Rule and Supplemental Proposed Rule

ENVIRONMENTAL PROTECTION AGENCY

40 CFR Part 721

[OPPTS–50639D; FRL–6823–6]

RIN 2070–AD43

Perfluoroalkyl Sulfonates; Significant New Use Rule

AGENCY: Environmental Protection Agency (EPA).

ACTION: Final rule.

SUMMARY: EPA is issuing a significant new use rule (SNUR) under section 5(a)(2) of the Toxic Substances Control Act (TSCA) for 13 chemicals, including polymers, that are derived from perfluorooctanesulfonic acid (PFOSH) and its higher and lower homologues. These chemicals are collectively referred to as perfluoroalkyl sulfonates, or PFAS. This rule requires manufacturers and importers to notify EPA at least 90 days before commencing the manufacture or import of these chemical substances for the significant new uses described in this document. EPA believes that this action is necessary because the PFAS component of these chemical substances may be hazardous to human health and the environment. The required notice will provide EPA with the opportunity to evaluate an intended new use and associated activities and, if necessary, to prohibit or limit that activity before it occurs. This action promulgates a portion of the proposed SNUR originally published in the **Federal Register** of October 18, 2000. This action also removes from the SNUR two chemicals that were listed erroneously in that original proposal. Published elsewhere in today's issue of the **Federal Register** is a supplemental proposed rule which addresses the remainder of the chemicals listed in the original proposed SNUR.

DATES: This final rule is effective on April 10, 2002.

FOR FURTHER INFORMATION CONTACT: *For general information contact*: Barbara Cunningham, Acting Director, Environmental Assistance Division (7408M), Office of Pollution Prevention and Toxics, Environmental Protection Agency, 1200 Pennsylvania Ave., NW., Washington, DC 20460; telephone number: (202) 554–1404; e-mail address: TSCA-Hotline@epa.gov.

For technical information contact: Mary F. Dominiak, Chemical Control Division, (7405M), Office of Pollution Prevention and Toxics, Environmental Protection Agency, 1200 Pennsylvania Ave., NW., Washington, DC 20460; telephone number: (202) 564–8104; e-mail address: dominiak.mary@epa.gov.

SUPPLEMENTARY INFORMATION:

I. General Information

A. Does this Action Apply to Me?

You may be potentially affected by this action if you manufacture (defined by statute to include import) any of the chemical substances that are listed in Table 2 of this unit. Persons who intend to import any chemical substance governed by a final SNUR are subject to the TSCA section 13 (15 U.S.C. 2612) import certification requirements, and to the regulations codified at 19 CFR 12.118 through 12.127 and 12.728. Those persons must certify that they are in compliance with the SNUR requirements. The EPA policy in support of import certification appears at 40 CFR part 707, subpart B. In addition, any persons who export or intend to export any of the chemical substances listed in Table 2 of this unit are subject to the export notification provisions of TSCA section 12(b) (15 U.S.C. 2611(b)), and must comply with the export notification requirements in 40 CFR 721.20 and 40 CFR part 707, subpart D. Potentially affected categories and entities may include, but are not limited to:

TABLE 1.—POTENTIALLY AFFECTED ENTITIES

Categories	NAICS codes	Examples of potentially affected entities
Chemical Manufacturers or Importers	325	Persons who manufacture (defined by statute to include import) one or more of the subject chemical substances
Chemical Exporters	325	Persons who export, or intend to export, one or more of the subject chemical substances

This listing is not intended to be exhaustive, but rather provides a guide for readers regarding entities likely to be affected by this action. Other types of entities not listed in the table in this unit could also be affected. The North American Industrial Classification System (NAICS) codes have been provided to assist you and others in determining whether or not this action applies to certain entities. To determine whether you or your business is affected by this action, you should carefully examine the applicability provisions in 40 CFR 721.5 for SNUR-related obligations. Also, consult Unit II. Note that because this rule designates certain manufacturing and importing activities as significant new uses, persons that solely process existing stocks of the chemical substances that are covered by this action would not be subject to the rule. If you have any questions regarding the applicability of this action to a particular entity, consult the technical person listed under **FOR FURTHER INFORMATION CONTACT**.

One chemical in Table 2 of this unit is identified by both premanufacture notice (PMN) and Chemical Abstract Service number (CAS No.). In the proposed SNUR, only the PMN appeared with the chemical.

TABLE 2.—CHEMICAL SUBSTANCES COVERED BY THIS FINAL RULE

CAS No./PMN	CAS Ninth Collective Index Name
2250–98–8	1-Octanesulfonamide, N,N',N''-[phosphinylidynetris(oxy-2,1-ethanediyl)]tris[N-ethyl-1,1,2,2,3,3,4,4,5,5,6,6,7,7,8,8,8-heptadecafluoro-
30381–98–7	1-Octanesulfonamide, N,N'-[phosphinicobis(oxy-2,1-ethanediyl)]bis[N-ethyl-1,1,2,2,3,3,4,4,5,5,6,6,7,7,8,8,8-heptadecafluoro-, ammonium salt

TABLE 2.—CHEMICAL SUBSTANCES COVERED BY THIS FINAL RULE—Continued

CAS No./PMN	CAS Ninth Collective Index Name
57589–85-2	Benzoic acid, 2,3,4,5-tetrachloro-6-[[[3-[[(heptadecafluorooctyl)sulfonyl]oxy]phenyl]amino]carbonyl]-, monopotassium salt
61660–12-6	1-Octanesulfonamide, N-ethyl-1,1,2,2,3,3,4,4,5,5,6,6,7,7,8,8,8-heptadecafluoro-N-[3-(trimethoxysilyl)propyl]-
67969–69-1	1-Octanesulfonamide, N-ethyl-1,1,2,2,3,3,4,4,5,5,6,6,7,7,8,8,8-heptadecafluoro-N-[2-(phosphonooxy)ethyl]-, diammonium salt
68608–14-0	Sulfonamides, C4-8-alkane, perfluoro, N-ethyl-N-(hydroxyethyl), reaction products with 1,1'-methylenebis[4-isocyanatobenzene]
70776–36-2	2-Propenoic acid, 2-methyl-, octadecyl ester, polymer with 1,1-dichloroethene, 2-[[(heptadecafluorooctyl)sulfonyl]methylamino]ethyl 2-propenoate, N-(hydroxymethyl)-2-propenamide, 2-[methyl[(nonafluorobutyl)sulfonyl]amino]ethyl 2-propenoate, 2-[methyl[(pentadecafluoroheptyl)sulfonyl]amino]ethyl 2-propenoate, 2-[methyl[(tridecafluorohexyl)sulfonyl]amino]ethyl 2-propenoate and 2-[methyl[(undecafluoropentyl)sulfonyl]amino]ethyl 2-propenoate
127133–66–8	2-Propenoic acid, 2-methyl-, polymers with Bu methacrylate, lauryl methacrylate and 2-[methyl[(perfluoro-C4-8-alkyl)sulfonyl]amino]ethyl methacrylate
148240–78–2	Fatty acids, C18-unsatd., trimers, 2-[[(heptadecafluorooctyl)sulfonyl]methylamino]ethyl esters
148684–79–1	Sulfonamides, C4-8-alkane, perfluoro, N-(hydroxyethyl)-N-methyl, reaction products with 1,6-diisocyanatohexane homopolymer and ethylene glycol
178535–22–3	Sulfonamides, C4-8-alkane, perfluoro, N-ethyl-N-(hydroxyethyl)-, polymers with 1,1'-methylenebis[4-isocyanatobenzene] and polymethylenepolyphenylene isocyanate, 2-ethylhexyl esters, Me Et ketone oxime-blocked
P–94–2205	Polymethylenepolyphenylene isocyanate and bis(4-NCO-phenyl)methane reaction products with 2-ethyl-1-hexanol, 2-butanone, oxime, N-ethyl-N-(2- hydroxyethyl)-1-C4-C8 perfluoroalkanesulfonamide
P–96–1645 306974–63–0	Fatty acids, C18-unsatd., dimers, 2-[methyl[(perfluoro-C4-8-alkyl)sulfonyl]amino]ethyl esters

B. How Can I Get Additional Information, Including Copies of this Document or Other Related Documents?

1. *Electronically*. You may obtain electronic copies of this document, and certain other related documents that might be available electronically, from the EPA Internet Home Page at *http://www.epa.gov/*. To access this document, on the Home Page select ''Laws and Regulations,'' ''Regulations and Proposed Rules,'' and then look up the entry for this document under the ''**Federal Register**—Environmental Documents.'' You can also go directly to the **Federal Register** listings at *http://www.epa.gov/fedrgstr/*.

2. *In person*. The Agency has established an official record for this action under docket control number OPPTS–50639D. The official record consists of the documents specifically referenced in this action, any public comments received during an applicable comment period, and other information related to this action, including any information claimed as Confidential Business Information (CBI). This official record includes the documents that are physically located in the docket, as well as the documents that are referenced in those documents. The public version of the official record does not include any information claimed as CBI. The public version of the official record, which includes printed, paper versions of any electronic comments submitted during an applicable comment period, is available for inspection in the TSCA Nonconfidential Information Center, North East Mall Rm. B–607, Waterside Mall, 401 M St., SW., Washington, DC. The Center is open from noon to 4 p.m., Monday through Friday, excluding legal holidays. The telephone number for the Center is (202) 260–7099.

II. Background

A. What Action is the Agency Taking?

This rule requires persons to notify EPA at least 90 days before commencing the manufacture or import of the chemical substances identified in Table 2, Unit I.A., for the significant new use described in this document. The chemical substances identified in Table 2, Unit I.A., are 13 chemical substances, including polymers, that are derived from PFOSH and its homologues. These chemical substances are collectively referred to throughout this rule as PFAS. In the original proposed SNUR, these chemicals had been referred to collectively as perfluorooctyl sulfonates, or PFOS, but commenters noted that this generic usage of the term PFOS was inconsistent with the use by the manufacturer, the Minnesota Mining and Manufacturing Company (3M), of PFOS to refer only to chemicals with an eight-carbon, or C8, chain length. Many of the chemicals in the SNUR include a range of carbon chain lengths, although they all include C8 within the range. Accordingly, EPA will use the generic term PFAS to refer to any carbon chain length, including higher and lower homologues as well as C8, and the term PFOS to represent only those chemical substances which are predominantly C8.

The significant new use described by this document is: The manufacture or import for any use of any of the chemicals listed in Table 2, Unit I.A., on or after January 1, 2001.

The chemical substances subject to this SNUR are listed in Table 2, Unit I.A. All of these chemical substances have the potential to degrade to PFOSH in the environment. Information also suggests that these chemical substances may be converted to PFOSH via incomplete oxidation during the

incineration of PFOS-containing materials. Once PFOSH has been released to the environment, it does not undergo further chemical (hydrolysis), microbial, or photolytic degradation. PFOS is highly persistent in the environment and has a strong tendency to bioaccumulate. Studies have found PFOS in very small quantities in the blood of the general human population as well as in wildlife, indicating that exposure to the chemicals is widespread, and recent tests have raised concerns about their potential developmental, reproductive, and systemic toxicity (Refs. 1, 2, and 3). These facts, taken together, raise concerns for long term potential adverse effects in people and wildlife over time if PFOS should continue to be produced, released, and built up in the environment.

Based on all information available to EPA, including the comments filed on the proposed SNUR published in the **Federal Register** of October 18, 2000 (65 FR 62319) (FRL–6745–5), EPA believes that the chemical substances listed in Table 2, Unit I.A., were manufactured and imported in the United States only by 3M (Refs. 4 and 5). 3M committed to phase out these chemicals voluntarily by discontinuing their manufacture on a global basis by the end of December 2000, and 3M has confirmed that these chemicals were discontinued on schedule (Refs. 6 and 7). EPA believes that any manufacture or import for any use of these specific PFAS chemicals occurring after 3M's phase-out would thus be new. All manufactured PFAS has the potential to contribute to the globally available reservoir of PFAS that has resulted in the detectable levels of PFOS in the general population and wildlife. Any new manufacture or import of the PFAS chemicals listed in this rule, particularly for their historical, high volume uses, would significantly increase the magnitude and duration of exposure to these chemicals by adding to the existing burden of PFOS in the environment.

The chemical substances listed in Table 2, Unit I.A., were principally associated with uses in carpet, fabric, leather, textile, and paper coatings. None of the comments received on the proposed SNUR addressed any of these uses or focused on these particular substances. Although certain initial comments filed on the proposed SNUR sought blanket exemptions for specific uses of any chemical substances listed in the proposed SNUR, including the ones covered by this final rule, subsequent clarifications and additional correspondence submitted to the docket by the commenters indicated that none of the chemical substances listed in Table 2, Unit I.A., were or are being manufactured for, imported, or used in any of the specific uses for which they sought an exemption.

This action also removes from the original proposed SNUR two chemicals which were not included in the 3M phaseout plan. These two chemicals (CAS No. 148240–79–3 and CAS No. 148240–81–7) were listed in the originally proposed SNUR due to an error by EPA in correlating information provided by 3M with chemical identity data furnished by the Chemical Abstract Service. Comments submitted by 3M pointed out this error. EPA acknowledges that, because these two chemicals were not included in the 3M phaseout plan, they should not have been included in the original proposed SNUR. Accordingly, these two chemicals are not subject to any current proposed or final SNUR, and thus would not be subject to any corresponding SNUR-related reporting obligations.

Other chemicals originally included in the two tables in the proposed SNUR are addressed separately in a supplemental proposed SNUR published elsewhere in today's issue of the **Federal Register**. This final rule applies only to the specific chemical substances listed in Table 2, Unit I.A., on which no comments were received.

B. What is the Agency's Authority for Taking this Action?

Section 5(a)(2) of TSCA (15 U.S.C. 2604(a)(2)) authorizes EPA to determine that a use of a chemical substance is a ''significant new use.'' The Agency makes this determination by rule after considering all relevant factors, including those listed in TSCA section 5(a)(2). These factors include the volume of a chemical substance's production; the extent to which a use changes the type, form, magnitude, or duration of exposure to the substance; and the reasonably anticipated manner of producing or otherwise managing the substance. Once EPA makes this determination and promulgates a SNUR, TSCA section 5(a)(1)(B) requires persons to submit a significant new use notice (SNUN) to EPA at least 90 days before they manufacture, import, or process the chemical substance for that significant new use (15 U.S.C. 2604 (a)(1)(B)).

With respect to the chemical substances listed in Table 2, Unit I.A., all production had ceased on or before December 31, 2000, as discussed in Unit II.A. Any new manufacture or import for any use following that date would thus significantly change the volume of production, which was zero. By adding to the base amount of PFOS already detected in the environment around the world, any new manufacture or import for any use of these substances would also change the magnitude and duration of exposure to PFOS, because PFOS has been found to be both persistent and bioaccumulative. No comments submitted on the proposed SNUR suggested that these specific substances might be produced or managed any differently than they were in the past if they were to be produced again, particularly for their former uses, leading to the reasonable inference that any new manufacture or importation of these substances for any use would present hazard, exposure, and release concerns similar to those which prompted the promulgation of this SNUR. Accordingly, pursuant to TSCA section 5(a)(1)(B), EPA requires persons to submit a SNUN to EPA at least 90 days before they manufacture or import the chemical substances listed in Table 2 for any use (15 U.S.C. 2604 (a)(1)(B)).

As noted in the proposed SNUR, EPA believes that the intent of TSCA section 5(a)(1)(B) is best served by designating a use as a significant new use as of the proposal date of the SNUR, rather than as of the effective date of the final rule. If uses begun after publication of the proposed SNUR were considered to be ongoing, rather than new, it would be difficult for EPA to establish SNUR notice requirements, because any person could defeat the SNUR by initiating the proposed significant new use before the rule became final, and then argue that the use was ongoing.

Accordingly, persons who may have begun commercial manufacture or import of the PFAS chemicals listed in Table 2, Unit I.A., for the significant new uses listed in this final SNUR after the proposal was published on October 18, 2000, must stop that activity before the effective date of this final rule. Persons who ceased those activities will have to meet all SNUR notice requirements and wait until the end of the notice review period, including all extensions, before engaging in any activities designated as significant new uses. If, however, persons who may have begun commercial manufacture or import of these chemical substances between the proposal and the effective date of the SNUR meet the conditions of advance compliance as codified at 40 CFR 721.45(h), those persons will be considered to have met the final SNUR requirements for those activities.

III. References

These references have been placed in the official record that was established under docket control number OPPTS–

50639 for this rulemaking as indicated in Unit I.B.2. Reference documents identified with an Administrative Record number (AR) are cross-indexed to non-regulatory, publicly accessible information files maintained in the TSCA Nonconfidential Information Center. Copies of these documents can be obtained as described in Unit I.B.2.

1. (AR226–0620) Sulfonated Perfluorochemicals in the Environment: Sources, Dispersion, Fate, and Effects. 3M. St. Paul, MN. March 1, 2000.

2. (AR226–0547) The Science of Organic Fluorochemistry. 3M. St. Paul, MN. February 5, 1999.

3. (AR226–0548) Perfluorooctane Sulfonate: Current Summary of Human Sera, Health and Toxicology Data. 3M. St. Paul, MN. January 21, 1999.

4. (AR226–0550) Fluorochemical Use, Distribution, and Release Overview. 3M. St. Paul, MN. May 26, 1999.

5. Rice, Cody. Domestic Manufacturers or Importers of PFOS Chemicals Other Than 3M. USEPA/OPPT/EETD. Washington, DC. August 31, 2000.

6. (AR226–0600) Weppner, William A. Phase-out Plan for POSF-Based Products. 3M. St. Paul, MN. July 7, 2000.

7. (AR226–0997) Santoro, Mike. E-mail to Charles Auer, Production of PFOS Derivatives. 3M. St. Paul, MN. March 2, 2001.

IV. Regulatory Assessment Requirements

Under Executive Order 12866, entitled *Regulatory Planning and Review* (58 FR 51735, October 4, 1993), the Office of Management and Budget (OMB) has determined that SNURs are not a ''significant regulatory action'' subject to review by OMB, because SNURs do not meet the criteria in section 3(f) of the Executive order.

Based on EPA's experience with past SNURs, State, local, and tribal governments have not been impacted by these rules, and EPA does not have any reasons to believe that any State, local, or tribal government will be impacted by this rule. As such, EPA has determined that this regulatory action does not impose any enforceable duty, contain any unfunded mandate, or otherwise have any effect on small governments subject to the requirements of sections 202, 203, 204, or 205 of the Unfunded Mandates Reform Act of 1995 (UMRA) (Public Law 104–4).

This rule does not have tribal implications because it is not expected to have substantial direct effects on Indian Tribes. This does not significantly or uniquely affect the communities of Indian tribal governments, nor does it involve or impose any requirements that affect Indian Tribes. Accordingly, the requirements of section 3(b) of Executive Order 13084, entitled *Consultation and Coordination with Indian Tribal Governments* (63 FR 276755, May 19, 1998), do not apply to this rule. Executive Order 13175, entitled *Consultation and Coordination with Indian Tribal Governments* (65 FR 67249, November 6, 2000), which took effect on January 6, 2001, revokes Executive Order 13084 as of that date. EPA developed this rulemaking, however, during the period when Executive Order 13084 was in effect; thus, EPA addressed tribal considerations under Executive Order 13084. For the same reasons stated for Executive Order 13084, the requirements of Executive Order 13175 do not apply to this rule either. Nor will this action have a substantial direct effect on States, on the relationship between the national government and the States, or on the distribution of power and responsibilities among the various levels of government, as specified in Executive Order 13132, entitled *Federalism* (64 FR 43255, August 10, 1999).

This rule is not subject to Executive Order 13211, entitled *Actions Concerning Regulations That Significantly Affect Energy Supply, Distribution, or Use* (66 FR 28355, May 22, 2001), because this action is not expected to affect energy supply, distribution, or use.

In issuing this rule, EPA has taken the necessary steps to eliminate drafting errors and ambiguity, minimize potential litigation, and provide a clear legal standard for affected conduct, as required by section 3 of Executive Order 12988, entitled *Civil Justice Reform* (61 FR 4729, February 7, 1996).

EPA has complied with Executive Order 12630, entitled *Governmental Actions and Interference with Constitutionally Protected Property Rights* (53 FR 8859, March 15, 1988), by examining the takings implications of this rule in accordance with the ''Attorney General's Supplemental Guidelines for the Evaluation of Risk and Avoidance of Unanticipated Takings'' issued under the Executive Order.

This action does not involve special considerations of environmental justice related issues as required by Executive Order 12898, entitled *Federal Actions to Address Environmental Justice in Minority Populations and Low-Income Populations* (59 FR 7629, February 16, 1994).

This action is not subject to Executive Order 13045, entitled *Protection of Children from Environmental Health Risks and Safety Risks* (62 FR 19885, April 23, 1997), because this is not an economically significant regulatory action as defined by Executive Order 12866, and this action does not address environmental health or safety risks disproportionately affecting children.

In addition, since this action does not involve any technical standards, section 12(d) of the National Technology Transfer and Advancement Act of 1995 (NTTAA), Public Law 104–113, section 12(d) (15 U.S.C. 272 note), does not apply to this action.

Pursuant to section 605(b) of the Regulatory Flexibility Act (RFA) (5 U.S.C. 601 *et seq.*), the Agency hereby certifies that promulgation of this SNUR will not have a significant adverse economic impact on a substantial number of small entities. A SNUR applies to any person (including small or large entities) who intends to engage in any activity described in the rule as a ''significant new use.'' By definition of the word ''new,'' and based on all information currently available to EPA, it appears that no small or large entities currently engage in such activity. Since a SNUR requires merely that any person who intends to engage in such activity in the future must first notify EPA (by submitting a SNUN), no economic impact will even occur until someone decides to engage in those activities. As a voluntary action, it is reasonable to presume that this decision would be based on a determination by the person submitting the SNUN that the potential benefits would outweigh the costs. Although some small entities may decide to conduct such activities in the future, EPA cannot presently determine how many, if any, there may be. EPA's experience to date is that, in response to the promulgation of over 530 SNURs, the Agency has received fewer than 15 SNUNs. Of those SNUNs submitted, none appear to be from small entities. In fact, EPA expects to receive few, if any, SNUNs from either large or small entities in response to any SNUR. Therefore, EPA believes that the economic impact of complying with a SNUR is not expected to be significant or adversely impact a substantial number of small entities. This rationale has been provided to the Chief Counsel for Advocacy of the Small Business Administration.

According to the Paperwork Reduction Act (PRA), 44 U.S.C. 3501 *et seq.*, an agency may not conduct or sponsor, and a person is not required to respond to a collection of information that requires OMB approval under the

PRA, unless it has been approved by OMB and displays a currently valid OMB control number. The OMB control numbers for EPA's regulations, after initial display in the **Federal Register** and in addition to its display on any related collection instrument, are listed in 40 CFR part 9.

The information collection requirements related to this action have already been approved by OMB pursuant to the PRA under OMB control number 2070–0038 (EPA ICR No. 1188.06). This action does not impose any burden requiring additional OMB approval. If an entity were to submit a SNUN to the Agency, the annual burden is estimated to average between 98.96 and 118.92 hours per response at an estimated reporting cost of between $5,957 and $7,192 per SNUN. This burden estimate includes the time needed to review instructions, search existing data sources, gather and maintain the data needed, and complete, review and submit the required SNUN, and maintain the required records. This burden estimate does not include 1 hour of technical time at $64.30 per hour estimated to be required for customer notification of SNUR requirements, or the $2,500 user fee for submission of a SNUN ($100 for businesses with less than $40 million in annual sales).

Send any comments about the accuracy of the burden estimate, and any suggested methods for minimizing respondent burden, including through the use of automated collection techniques to the Director, Collection Strategies Division, Office of Environmental Information, Environmental Protection Agency (2822), 1200 Pennsylvania Ave., NW., Washington, DC 20460. Please remember to include the OMB control number in any correspondence, but do not submit any completed forms to this address.

V. Submission to Congress and the Comptroller General

The Congressional Review Act, 5 U.S.C. 801 *et seq.*, as added by the Small Business Regulatory Enforcement Fairness Act of 1996, generally provides that before a rule may take effect, the Agency promulgating the rule must submit a rule report, which includes a copy of the rule, to each House of the Congress and the Comptroller General of the United States. EPA will submit a report containing this rule and other required information to the U.S. Senate, the U.S. House of Representatives, and the Comptroller General of the United States prior to publication of the rule in the **Federal Register**. This rule is not a ''major rule'' as defined by 5 U.S.C. 804(2).

List of Subjects in 40 CFR Part 721

Environmental protection, Chemicals, Hazardous materials, Reporting and recordkeeping requirements, Significant new uses.

Dated: March 4, 2002.

William H. Sanders, III,

Director, Office of Pollution Prevention and Toxics.

Therefore, 40 CFR chapter I is amended as follows:

PART 721—[AMENDED]

1. The authority citation for part 721 continues to read as follows:

Authority: 15 U.S.C. 2604, 2607, and 2625(c).

2. By adding new § 721.9582 to subpart E to read as follows:

§ 721.9582 Certain perfluoroalkyl sulfonates.

(a) *Chemical substances and significant new uses subject to reporting.* (1) The chemical substances listed in Table 1 of this paragraph are subject to reporting under this section for the significant new uses described in paragraph (a)(2) of this section.

TABLE 1.—PFAS CHEMICALS SUBJECT TO REPORTING ON OR AFTER JANUARY 1, 2001

CAS No./PMN	CAS Ninth Collective Index Name
2250–98–8	1-Octanesulfonamide, N,N',N''-[phosphinylidynetris(oxy-2,1-ethanediyl)]tris[N-ethyl-1,1,2,2,3,3,4,4,5,5,6,6,7,7,8,8,8-heptadecafluoro-
30381–98–7	1-Octanesulfonamide, N,N'-[phosphinicobis(oxy-2,1-ethanediyl)]bis[N-ethyl-1,1,2,2,3,3,4,4,5,5,6,6,7,7,8,8,8-heptadecafluoro-, ammonium salt
57589–85–2	Benzoic acid, 2,3,4,5-tetrachloro-6-[[[3-[[(heptadecafluorooctyl)sulfonyl]oxy]phenyl]amino]carbonyl]-, monopotassium salt
61660–12–6	1-Octanesulfonamide, N-ethyl-1,1,2,2,3,3,4,4,5,5,6,6,7,7,8,8,8-heptadecafluoro-N-[3-(trimethoxysilyl)propyl]-
67969–69–1	1-Octanesulfonamide, N-ethyl-1,1,2,2,3,3,4,4,5,5,6,6,7,7,8,8,8-heptadecafluoro-N-[2-(phosphonooxy)ethyl]-, diammonium salt
68608–14–0	Sulfonamides, C4-8-alkane, perfluoro, N-ethyl-N-(hydroxyethyl), reaction products with 1,1'-methylenebis[4-isocyanatobenzene]
70776–36–2	2-Propenoic acid, 2-methyl-, octadecyl ester, polymer with 1,1-dichloroethene, 2-[[(heptadecafluorooctyl)sulfonyl]methylamino]ethyl 2-propenoate, N-(hydroxymethyl)-2-propenamide, 2-[methyl[(nonafluorobutyl)sulfonyl]amino]ethyl 2-propenoate, 2-[methyl[(pentadecafluoroheptyl)sulfonyl]amino]ethyl 2-propenoate, 2-[methyl[(tridecafluorohexyl)sulfonyl]amino]ethyl 2-propenoate and 2-[methyl[(undecafluoropentyl)sulfonyl]amino]ethyl 2-propenoate
127133–66–8	2-Propenoic acid, 2-methyl-, polymers with Bu methacrylate, lauryl methacrylate and 2-[methyl[(perfluoro-C4-8-alkyl)sulfonyl]amino]ethyl methacrylate
148240–78–2	Fatty acids, C18-unsatd., trimers, 2-[[(heptadecafluorooctyl)sulfonyl]methylamino]ethyl esters
148684–79–1	Sulfonamides, C4-8-alkane, perfluoro, N-(hydroxyethyl)-N-methyl, reaction products with 1,6-diisocyanatohexane homopolymer and ethylene glycol

TABLE 1.—PFAS CHEMICALS SUBJECT TO REPORTING ON OR AFTER JANUARY 1, 2001—Continued

CAS No./PMN	CAS Ninth Collective Index Name
178535–22–3	Sulfonamides, C4-8-alkane, perfluoro, N-ethyl-N-(hydroxyethyl)-, polymers with 1,1'-methylenebis[4-isocyanatobenzene] and polymethylenepolyphenylene isocyanate, 2-ethylhexyl esters, Me Et ketone oxime-blocked
P–94–2205	Polymethylenepolyphenylene isocyanate and bis(4-NCO-phenyl)methane reaction products with 2-ethyl-1-hexanol, 2-butanone, oxime, N-ethyl-N-(2- hydroxyethyl)-1-C4-C8 perfluoroalkanesulfonamide
P–96–1645 306974–63–0	Fatty acids, C18-unsatd., dimers, 2-[methyl[(perfluoro-C4-8-alkyl)sulfonyl]amino]ethyl esters

(2) The significant new uses are:

(i) Any manufacture or import for any use of any chemical listed in Table 1 of paragraph (a)(1) of this section on or after January 1, 2001.

(ii) [Reserved]

(b) [Reserved]

[FR Doc. 02–5746 Filed 3–8–02; 8:45 am]

BILLING CODE 6560–50–S

ENVIRONMENTAL PROTECTION AGENCY

40 CFR Part 721

[OPPTS–50639C; FRL–6823–7]

RIN 2070–AD43

Perfluoroalkyl Sulfonates; Proposed Significant New Use Rule

AGENCY: Environmental Protection Agency (EPA).

ACTION: Supplemental proposed rule.

SUMMARY: EPA is proposing a supplemental significant new use rule (SNUR) under section 5(a)(2) of the Toxic Substances Control Act (TSCA) for the following 75 substances: Perfluorooctanesulfonic acid (PFOSH) and certain of its salts (PFOSS), perfluorooctanesulfonyl fluoride (POSF), certain higher and lower homologues of PFOSH and POSF, and certain other chemical substances, including polymers, that are derived from PFOSH and its homologues. These chemicals are collectively referred to as perfluoroalkyl sulfonates, or PFAS. This proposed rule would require manufacturers and importers to notify EPA at least 90 days before commencing the manufacture or import of these chemical substances for the significant new uses described in this document. This supplemental action takes into account comments received on an earlier proposed SNUR published in the **Federal Register** of October 18, 2000, amends the description and the list of chemicals to which this proposed SNUR would apply, and clarifies the definitions of significant new uses. EPA believes that this action is necessary because the PFAS component of these chemical substances may be hazardous to human health and the environment. The required notice will provide EPA with the opportunity to evaluate an intended new use and associated activities and, if necessary, to prohibit or limit that activity before it occurs. Published elsewhere in today's issue of the **Federal Register** is a final rule which addresses the remainder of the chemicals listed in the original proposed SNUR.

DATES: Comments, identified by docket control number OPPTS–50639C, must be received on or before April 10, 2002.

ADDRESSES: Comments may be submitted by mail, electronically, or in person. Please follow the detailed instructions for each method as provided in Unit I. of the **SUPPLEMENTARY INFORMATION**. To ensure proper receipt by EPA, it is imperative that you identify docket control number OPPTS–50639C in the subject line on the first page of your response.

FOR FURTHER INFORMATION CONTACT: *For general information contact*: Barbara Cunningham, Acting Director, Environmental Assistance Division (74080), Office of Pollution Prevention and Toxics, Environmental Protection Agency, 1200 Pennsylvania Ave., NW., Washington, DC 20460; telephone number: (202) 554–1404; e-mail address: TSCA-Hotline@epa.gov.

For technical information contact: Mary F. Dominiak, Chemical Control Division (7405M), Environmental Protection Agency, 1200 Pennsylvania Ave., NW., Washington, DC 20460; telephone number: (202) 564–8104; e-mail address: dominiak.mary@epa.gov.

SUPPLEMENTARY INFORMATION:

I. General Information

A. Does this Action Apply to Me?

You may be potentially affected by this action if you manufacture (defined by statute to include import) any of the chemical substances that are listed in Table 2 of this unit. Persons who intend to import any chemical substance governed by a final SNUR are subject to the TSCA section 13 (15 U.S.C. 2612) import certification requirements, and to the regulations codified at 19 CFR 12.118 through 12.127 and 12.728. Those persons must certify that they are in compliance with the SNUR requirements. The EPA policy in support of import certification appears at 40 CFR part 707, subpart B. In addition, any persons who export or intend to export any of the chemical substances listed in Table 2 of this unit are subject to the export notification provisions of TSCA section 12(b) (15 U.S.C. 2611(b)), and must comply with the export notification requirements in 40 CFR 721.20 and 40 CFR part 707, subpart D. Potentially affected categories and entities may include, but are not limited to:

TABLE 1.—POTENTIALLY AFFECTED ENTITIES

Categories	NAICS codes	Examples of potentially affected entities
Chemical Manufacturers or Importers	325	Persons who manufacture (defined by statute to include import) one or more of the subject chemical substances
Chemical Exporters	325	Persons who export, or intend to export, one or more of the subject chemical substances

This listing is not intended to be exhaustive, but rather provides a guide for readers regarding entities likely to be affected by this action. Other types of entities not listed in Table 1 of this unit could also be affected. The North American Industrial Classification System (NAICS) codes have been provided to assist you and others in determining whether or not this action applies to certain entities. To determine whether you or your business is affected by this action, you should carefully examine the applicability provisions in 40 CFR 721.5 for SNUR-related obligations. Also, consult Unit III. If you have any questions regarding the applicability of this action to a particular entity, consult the technical person listed under **FOR FURTHER INFORMATION CONTACT**.

Some chemicals in Table 2 of this unit are identified by both premanufacture notice (PMN) and Chemical Abstract Service numbers (CAS No.). In the original proposed SNUR, only the PMN appeared with those chemicals.

TABLE 2.—CHEMICAL SUBSTANCES COVERED BY THIS PROPOSED RULE

CAS No./PMN	CAS Ninth Collective Index Name
307–35–7	1-Octanesulfonyl fluoride, 1,1,2,2,3,3,4,4,5,5,6,6,7,7,8,8,8-heptadecafluoro-

TABLE 2.—CHEMICAL SUBSTANCES COVERED BY THIS PROPOSED RULE—Continued

CAS No./PMN	CAS Ninth Collective Index Name
307–51–7	1-Decanesulfonyl fluoride, 1,1,2,2,3,3,4,4,5,5,6,6,7,7,8,8,9,9,10,10,10-heneicosafluoro-
376–14–7	2-Propenoic acid, 2-methyl-, 2-[ethyl[(heptadecafluorooctyl)sulfonyl]amino]ethyl ester
383–07–3	2-Propenoic acid, 2-[butyl[(heptadecafluorooctyl)sulfonyl]amino]ethyl ester
423–50–7	1-Hexanesulfonyl fluoride, 1,1,2,2,3,3,4,4,5,5,6,6,6-tridecafluoro-
423–82–5	2-Propenoic acid, 2-[ethyl[(heptadecafluorooctyl)sulfonyl]amino]ethyl ester
754–91–6	1-Octanesulfonamide, 1,1,2,2,3,3,4,4,5,5,6,6,7,7,8,8,8-heptadecafluoro-
1652–63–7	1-Propanaminium, 3-[[(heptadecafluorooctyl)sulfonyl]amino]-N,N,N-trimethyl-, iodide
1691–99–2	1-Octanesulfonamide, N-ethyl-1,1,2,2,3,3,4,4,5,5,6,6,7,7,8,8,8-heptadecafluoro-N-(2-hydroxyethyl)-
1763–23–1	1-Octanesulfonic acid, 1,1,2,2,3,3,4,4,5,5,6,6,7,7,8,8,8-heptadecafluoro-
2795–39–3	1-Octanesulfonic acid, 1,1,2,2,3,3,4,4,5,5,6,6,7,7,8,8,8-heptadecafluoro-, potassium salt
2991–51–7	Glycine, N-ethyl-N-[(heptadecafluorooctyl)sulfonyl]-, potassium salt
4151–50–2	1-Octanesulfonamide, N-ethyl-1,1,2,2,3,3,4,4,5,5,6,6,7,7,8,8,8-heptadecafluoro-
14650–24–9	2-Propenoic acid, 2-methyl-, 2-[[(heptadecafluorooctyl)sulfonyl]methylamino]ethyl ester
17202–41–4	1-Nonanesulfonic acid, 1,1,2,2,3,3,4,4,5,5,6,6,7,7,8,8,9,9,9-nonadecafluoro-, ammonium salt
24448–09–7	1-Octanesulfonamide, 1,1,2,2,3,3,4,4,5,5,6,6,7,7,8,8,8-heptadecafluoro-N-(2-hydroxyethyl)-N-methyl-
25268–77–3	2-Propenoic acid, 2-[[(heptadecafluorooctyl)sulfonyl]methylamino]ethyl ester
29081–56–9	1-Octanesulfonic acid, 1,1,2,2,3,3,4,4,5,5,6,6,7,7,8,8,8-heptadecafluoro-, ammonium salt
29117–08–6	Poly(oxy-1,2-ethanediyl), .alpha.-[2-[ethyl[(heptadecafluorooctyl)sulfonyl]amino]ethyl]-.omega.-hydroxy-
29457–72–5	1-Octanesulfonic acid, 1,1,2,2,3,3,4,4,5,5,6,6,7,7,8,8,8-heptadecafluoro-, lithium salt
31506–32–8	1-Octanesulfonamide, 1,1,2,2,3,3,4,4,5,5,6,6,7,7,8,8,8-heptadecafluoro-N-methyl-
38006–74–5	1-Propanaminium, 3-[[(heptadecafluorooctyl)sulfonyl]amino]-N,N,N-trimethyl-, chloride
38850–58–7	1-Propanaminium, N-(2-hydroxyethyl)-N,N-dimethyl-3-[(3-sulfopropyl)[(tridecafluorohexyl)sulfonyl]amino]-, inner salt
55120–77–9	1-Hexanesulfonic acid, 1,1,2,2,3,3,4,4,5,5,6,6,6-tridecafluoro-, lithium salt
67584–42–3	Cyclohexanesulfonic acid, decafluoro(pentafluoroethyl)-, potassium salt
67906–42–7	1-Decanesulfonic acid, 1,1,2,2,3,3,4,4,5,5,6,6,7,7,8,8,9,9,10,10,10-heneicosafluoro-, ammonium salt
68156–01–4	Cyclohexanesulfonic acid, nonafluorobis(trifluoromethyl)-, potassium salt
68298–62–4	2-Propenoic acid, 2-[butyl[(heptadecafluorooctyl)sulfonyl]amino]ethyl ester, telomer with 2-[butyl[(pentadecafluoroheptyl)sulfonyl]amino]ethyl 2-propenoate, methyloxirane polymer with oxirane di-2-propenoate, methyloxirane polymer with oxirane mono-2-propenoate and 1-octanethiol
68329–56–6	2-Propenoic acid, eicosyl ester, polymer with 2-[[(heptadecafluorooctyl)sulfonyl]methylamino]ethyl 2-propenoate, hexadecyl 2-propenoate, 2-[methyl[(nonafluorobutyl)sulfonyl]amino]ethyl 2-propenoate, 2-[methyl[(pentadecafluoroheptyl)sulfonyl]amino]ethyl 2-propenoate, 2-[methyl[(tridecafluorohexyl)sulfonyl]amino]ethyl 2-propenoate, 2-[methyl[(undecafluoropentyl)sulfonyl]amino]ethyl 2-propenoate and octadecyl 2-propenoate
68541–80–0	2-Propenoic acid, polymer with 2-[ethyl[(heptadecafluorooctyl)sulfonyl]amino]ethyl 2-methyl-2-propenoate and octadecyl 2-propenoate
68555–90–8	2-Propenoic acid, butyl ester, polymer with 2-[[(heptadecafluorooctyl)sulfonyl]methylamino]ethyl 2-propenoate, 2-[methyl[(nonafluorobutyl)sulfonyl]amino]ethyl 2-propenoate, 2-[methyl[(pentadecafluoroheptyl)sulfonyl]amino]ethyl 2-propenoate, 2-[methyl[(tridecafluorohexyl)sulfonyl]amino]ethyl 2-propenoate and 2-[methyl[(undecafluoropentyl)sulfonyl]amino]ethyl 2-propenoate

TABLE 2.—CHEMICAL SUBSTANCES COVERED BY THIS PROPOSED RULE—Continued

CAS No./PMN	CAS Ninth Collective Index Name
68555–91–9	2-Propenoic acid, 2-methyl-, 2-[ethyl[(heptadecafluorooctyl)sulfonyl]amino]ethyl ester, polymer with 2-[ethyl[(nonafluorobutyl)sulfonyl]amino] ethyl 2-methyl-2-propenoate, 2-[ethyl[(pentadecafluoroheptyl)sulfonyl]amino]ethyl 2-methyl-2-propenoate, 2-[ethyl[(tridecafluorohexyl)sulfonyl]amino]ethyl 2-methyl-2-propenoate, 2-[ethyl[(undecafluoropentyl)sulfonyl]amino]ethyl 2-methyl-2-propenoate and octadecyl 2-methyl-2-propenoate
68555–92–0	2-Propenoic acid, 2-methyl-, 2-[[(heptadecafluorooctyl)sulfonyl]methylamino]ethyl ester, polymer with 2-[methyl[(nonafluorobutyl)sulfonyl]amino]ethyl 2-methyl-2-propenoate, 2-[methyl[(pentadecafluoroheptyl)sulfonyl]amino]ethyl 2-methyl-2-propenoate, 2-[methyl[(tridecafluorohexyl)sulfonyl]amino]ethyl 2-methyl-2-propenoate, 2-[methyl[(undecafluoropentyl)sulfonyl]amino]ethyl 2-methyl-2-propenoate and octadecyl 2-methyl-2-propenoate
68586–14–1	2-Propenoic acid, 2-[[(heptadecafluorooctyl)sulfonyl]methylamino]ethyl ester, telomer with 2-[methyl[(nonafluorobutyl)sulfonyl]amino]ethyl 2-propenoate, .alpha.-(2-methyl-1-oxo-2-propenyl)-.omega.-hydroxypoly(oxy-1,2-ethanediyl), .alpha.-(2-methyl-1-oxo-2-propenyl)-.omega.-[(2-methyl-1-oxo-2-propenyl)oxy]poly(oxy-1,2-ethanediyl), 2-[methyl[(pentadecafluoroheptyl)sulfonyl]amino]ethyl 2-propenoate, 2-[methyl[(tridecafluorohexyl)sulfonyl]amino]ethyl 2-propenoate, 2-[methyl[(undecafluoropentyl)sulfonyl]amino]ethyl 2-propenoate and 1-octanethiol
68649–26–3	1-Octanesulfonamide, N-ethyl-1,1,2,2,3,3,4,4,5,5,6,6,7,7,8,8,8-heptadecafluoro-N-(2-hydroxyethyl)-, reaction products with N-ethyl-1,1,2,2,3,3,4,4,4-nonafluoro-N-(2-hydroxyethyl)-1-butanesulfonamide, N-ethyl-1,1,2,2,3,3,4,4,5,5,6,6,7,7,7-pentadecafluoro-N-(2-hydroxyethyl)-1-heptanesulfonamide, N-ethyl-1,1,2,2,3,3,4,4,5,5,6,6,6-tridecafluoro-N-(2-hydroxyethyl)-1-hexanesulfonamide, N-ethyl-1,1,2,2,3,3,4,4,5,5,5-undecafluoro-N-(2-hydroxyethyl)-1-pentanesulfonamide, polymethylenepolyphenylene isocyanate and stearyl alc.
68891–96–3	Chromium, diaquatetrachloro[.mu.-[N-ethyl-N-[(heptadecafluorooctyl)sulfonyl]glycinato-.kappa.O:.kappa.O']]-.mu.-hydroxybis(2-methyl-1-propanol)di-
68867–60–7	2-Propenoic acid, 2-[[(heptadecafluorooctyl)sulfonyl]methylamino]ethyl ester, polymer with 2-[methyl[(nonafluorobutyl)sulfonyl]amino]ethyl 2-propenoate, 2-[methyl[(pentadecafluoroheptyl)sulfonyl]amino]ethyl 2-propenoate, 2-[methyl[(tridecafluorohexyl)sulfonyl]amino]ethyl 2-propenoate, 2-[methyl[(undecafluoropentyl)sulfonyl]amino]ethyl 2-propenoate and .alpha.-(1-oxo-2-propenyl)-.omega.-methoxypoly (oxy-1,2-ethanediyl)
68867–62–9	2-Propenoic acid, 2-methyl-, 2-[ethyl[(heptadecafluorooctyl)sulfonyl]amino]ethyl ester, telomer with 2-[ethyl[(nonafluorobutyl)sulfonyl]amino]ethyl 2-methyl-2-propenoate, 2-[ethyl[(pentadecafluoroheptyl)sulfonyl]amino]ethyl 2-methyl-2-propenoate, 2-[ethyl[(tridecafluorohexyl)sulfonyl]amino]ethyl 2-methyl-2-propenoate, 2-[ethyl[(undecafluoropentyl)sulfonyl]amino]ethyl 2-methyl-2-propenoate, 1-octanethiol and .alpha.-(1-oxo-2-propenyl)-.omega.-methoxypoly(oxy-1,2-ethanediyl)
68909–15–9	2-Propenoic acid, eicosyl ester, polymers with branched octyl acrylate, 2-[[(heptadecafluorooctyl)sulfonyl]methylamino]ethyl acrylate, 2-[methyl[(nonafluorobutyl)sulfonyl]amino]ethyl acrylate, 2-[methyl[(pentadecafluoroheptyl)sulfonyl]amino]ethyl acrylate, 2-[methyl[(tridecafluorohexyl)sulfonyl]amino]ethyl acrylate, 2-[methyl[(undecafluoropentyl)sulfonyl]amino]ethyl acrylate, polyethylene glycol acrylate Me ether and stearyl acrylate
68958–61–2	Poly(oxy-1,2-ethanediyl), .alpha.-[2-[ethyl[(heptadecafluorooctyl)sulfonyl]amino]ethyl]-.omega.-methoxy-
70225–14–8	1-Octanesulfonic acid, 1,1,2,2,3,3,4,4,5,5,6,6,7,7,8,8,8-heptadecafluoro-, compd. with 2,2'-iminobis[ethanol] (1:1)
71487–20–2	2-Propenoic acid, 2-methyl-, methyl ester, polymer with ethenylbenzene, 2-[[(heptadecafluorooctyl)sulfonyl]methylamino]ethyl 2-propenoate, 2-[methyl[(nonafluorobutyl)sulfonyl]amino]ethyl 2-propenoate, 2-[methyl[(pentadecafluoroheptyl)sulfonyl]amino]ethyl 2-propenoate, 2-[methyl[(tridecafluorohexyl)sulfonyl]amino]ethyl 2-propenoate, 2-[methyl[(undecafluoropentyl)sulfonyl]amino]ethyl 2-propenoate and 2-propenoic acid
73772–32–4	1-Propanesulfonic acid, 3-[[3-(dimethylamino)propyl][(tridecafluorohexyl)sulfonyl]amino]-2-hydroxy-, monosodium salt
81190–38–7	1-Propanaminium, N-(2-hydroxyethyl)-3-[(2-hydroxy-3-sulfopropyl)[(tridecafluorohexyl)sulfonyl]amino]-N,N-dimethyl-, hydroxide, monosodium salt

TABLE 2.—CHEMICAL SUBSTANCES COVERED BY THIS PROPOSED RULE—Continued

CAS No./PMN	CAS Ninth Collective Index Name
91081–99–1	Sulfonamides, C4-8-alkane, perfluoro, N-(hydroxyethyl)-N-methyl, reaction products with epichlorohydrin, adipates (esters)
94133–90–1	1-Propanesulfonic acid, 3-[[3-(dimethylamino)propyl][(heptadecafluorooctyl)sulfonyl]amino]-2-hydroxy-, monosodium salt
98999–57–6	Sulfonamides, C7-8-alkane, perfluoro, N-methyl-N-[2-[(1-oxo-2-propenyl)oxy]ethyl], polymers with 2-ethoxyethyl acrylate, glycidyl methacrylate and N,N,N-trimethyl-2-[(2-methyl-1-oxo-2-propenyl)oxy]ethanaminium chloride
117806–54–9	1-Heptanesulfonic acid, 1,1,2,2,3,3,4,4,5,5,6,6,7,7,7-pentadecafluoro-, lithium salt
129813–71–4	Sulfonamides, C4-8-alkane, perfluoro, N-methyl-N-(oxiranylmethyl)
148240–80–6	Fatty acids, C18-unsatd., trimers, 2-[methyl[(tridecafluorohexyl)sulfonyl]amino]ethyl esters
148240–82–8	Fatty acids, C18-unsatd., trimers, 2-[methyl[(pentadecafluoroheptyl)sulfonyl]amino]ethyl esters
182700–90–9	1-Octanesulfonamide, 1,1,2,2,3,3,4,4,5,5,6,6,7,7,8,8,8-heptadecafluoro-N-methyl-, reaction products with benzene-chlorine-sulfur chloride (S2Cl2) reaction products chlorides
L–92–0151	2-Propenoic acid, 2-methyl-, butyl ester, polymer with 2-[ethyl[(heptadecafluorooctyl)sulfonyl]amino]ethyl 2-methyl-2-propenoate, 2-[ethyl[(nonafluorobutyl)sulfonyl]amino]ethyl 2-methyl-2-propenoate, 2-[ethyl[(pentadecafluoroheptyl)sulfonyl]amino]ethyl 2-methyl-2-propenoate, 2-[ethyl[(tridecafluorohexyl)sulfonyl]amino]ethyl 2-methyl-2-propenoate and 2-propenoic acid
P–80–0183 192662–29–6	Sulfonamides, C4-8-alkane, perfluoro, N-[3-(dimethylamino)propyl], reaction products with acrylic acid
P–83–1102 306973–46–6	Fatty acids, linseed-oil, dimers, 2-[[(heptadecafluorooctyl)sulfonyl]methylamino]ethyl esters
P–84–1163 306975–56–4	Propanoic acid, 3-hydroxy-2-(hydroxymethyl)-2-methyl-, polymer with 2-ethyl-2-(hydroxymethyl)-1,3-propanediol and N,N',2-tris(6-isocyanatohexyl)imidodicarbonic diamide, reaction products with N-ethyl-1,1,2,2,3,3,4,4,5,5,6,6,7,7,8,8,8-heptadecafluoro-N-(2-hydroxyethyl)-1-octanesulfonamide and N-ethyl-1,1,2,2,3,3,4,4,5,5,6,6,7,7,7-pentadecafluoro-N-(2-hydroxyethyl)-1-heptanesulfonamide, compds. with triethylamine
P–84–1171 306975–57–5	Propanoic acid, 3-hydroxy-2-(hydroxymethyl)-2-methyl-, polymer with 1,1'-methylenebis[4-isocyanatobenzene] and 1,2,3-propanetriol, reaction products with N-ethyl-1,1,2,2,3,3,4,4,5,5,6,6,7,7,8,8,8-heptadecafluoro-N-(2-hydroxyethyl)-1-octanesulfonamide and N-ethyl-1,1,2,2,3,3,4,4,5,5,6,6,7,7,7-pentadecafluoro-N-(2-hydroxyethyl)-1-heptanesulfonamide, compds. with morpholine
P–86–0301 306973–47–7	Sulfonamides, C4-8-alkane, perfluoro, N-(hydroxyethyl)-N-methyl, reaction products with 12-hydroxystearic acid and 2,4-TDI, ammonium salts
P–86–0958 306975–62–2	2-Propenoic acid, 2-methyl-, dodecyl ester, polymers with 2-[methyl[(perfluoro-C4-8-alkyl)sulfonyl]amino]ethyl acrylate and vinylidene chloride
P–89–0799 160901–25–7	Sulfonamides, C4-8-alkane, perfluoro, N-ethyl-N-(hydroxyethyl), reaction products with 2-ethyl-1-hexanol and polymethylenepolyphenylene isocyanate
P–90–0111 306974–19–6	Sulfonamides, C4-8-alkane, perfluoro, N-methyl-N-[(3-octadecyl-2-oxo-5-oxazolidinyl)methyl]
P–91–1419 306975–84–8	Poly(oxy-1,2-ethanediyl), .alpha.-hydro-.omega.-hydroxy-, polymer with 1,6-diisocyanatohexane, N-(2-hydroxyethyl)-N-methyl perfluoro C4-8-alkane sulfonamides-blocked
P–93–1444 306975–85–9	2-Propenoic acid, 2-methyl-, dodecyl ester, polymers with N-(hydroxymethyl)-2-propenamide, 2-[methyl[(perfluoro-C4-8-alkyl)sulfonyl]amino]ethyl methacrylate, stearyl methacrylate and vinylidene chloride
P–94–0545 306976–25–0	1-Hexadecanaminium, N,N-dimethyl-N-[2-[(2-methyl-1-oxo-2-propenyl)oxy]ethyl]-, bromide, polymers with Bu acrylate, Bu methacrylate and 2-[methyl[(perfluoro-C4-8-alkyl)sulfonyl]amino]ethyl acrylate
P–94–0927 306976–55–6	2-Propenoic acid, 2-methyl-, 2-methylpropyl ester, polymer with 2,4-diisocyanato-1-methylbenzene, 2-ethyl-2-(hydroxymethyl)-1,3-propanediol and 2-propenoic acid, N-ethyl-N-(hydroxyethyl)perfluoro-C4-8-alkanesulfonamides-blocked
P–94–2206 306974–28–7	Siloxanes and Silicones, di-Me, mono[3-[(2-methyl-1-oxo-2-propenyl)oxy]propylgroup]-terminated, polymers with 2-[methyl[(perfluoro-C4-8-alkyl)sulfonyl]amino]ethyl acrylate and stearyl methacrylate

TABLE 2.—CHEMICAL SUBSTANCES COVERED BY THIS PROPOSED RULE—Continued

CAS No./PMN	CAS Ninth Collective Index Name
P–95–0120 306980–27–8	Sulfonamides, C4-8-alkane, perfluoro, N,N'-[1,6-hexanediylbis[(2-oxo-3,5-oxazolidinediyl)methylene]]bis[N-methyl-
P–96–1262 306974–45–8	Sulfonic acids, C6-8-alkane, perfluoro, compds. with polyethylene-polypropylene glycol bis(2-aminopropyl) ether
P–96–1424 306977–10–6	2-Propenoic acid, 2-methyl-, 2-(dimethylamino)ethyl ester, telomer with 2-[ethyl[(perfluoro-C4-8-alkyl)sulfonyl]amino]ethyl methacrylate and 1-octanethiol, N-oxides
P–96–1433 179005–06–2	Sulfonamides, C4-8-alkane, perfluoro, N-[3-(dimethyloxidoamino)propyl], potassium salts
P–97–0790 251099–16–8	1-Decanaminium, N-decyl-N,N-dimethyl-, salt with 1,1,2,2,3,3,4,4,5,5,6,6,7,7,8,8,8-heptadecafluoro-1-octanesulfonic acid (1:1)
P–98–0251 306978–04–1	2-Propenoic acid, butyl ester, polymers with acrylamide, 2-[methyl[(perfluoro-C4-8-alkyl)sulfonyl]amino]ethyl acrylate and vinylidene chloride
P–98–1272 306977–58–2	2-Propenoic acid, 2-methyl-, 3-(trimethoxysilyl)propyl ester, polymers with acrylic acid, 2-[methyl[(perfluoro-C4-8-alkyl)sulfonyl]amino]ethyl acrylate and propylene glycol monoacrylate, hydrolyzed, compds. with 2,2'-(methylimino)bis[ethanol]
P–99–0188 306978–65–4	Hexane, 1,6-diisocyanato-, homopolymer, N-(hydroxyethyl)-N-methyl perfluoro-C4-8-alkane sulfonamides- and stearyl alc.-blocked
P–99–0319 306979–40–8	Poly(oxy-1,2-ethanediyl), .alpha.-[2-(methylamino)ethyl]-.omega.-[(1,1,3,3-tetramethylbutyl)phenoxy]-, N-[(perfluoro-C4-8-alkyl)sulfonyl] derivs.

B. How Can I Get Additional Information, Including Copies of this Document or Other Related Documents?

1. *Electronically*. You may obtain electronic copies of this document, and certain other related documents that might be available electronically, from the EPA Internet Home Page at *http://www.epa.gov/*. To access this document, on the Home Page select ''Laws and Regulations,'' ''Regulations and Proposed Rules,'' and then look up the entry for this document under the ''**Federal Register**—Environmental Documents.'' You can also go directly to the **Federal Register** listings at *http://www.epa.gov/fedrgstr/*.

2. *In person*. The Agency has established an official record for this action under docket control number OPPTS–50639C. The official record consists of the documents specifically referenced in this action, any public comments received during an applicable comment period, and other information related to this action, including any information claimed as Confidential Business Information (CBI). This official record includes the documents that are physically located in the docket, as well as the documents that are referenced in those documents. The public version of the official record does not include any information claimed as CBI. The public version of the official record, which includes printed, paper versions of any electronic comments submitted during an applicable comment period, is available for inspection in the TSCA Nonconfidential Information Center, North East Mall Rm. B–607, Waterside Mall, 401 M St., SW., Washington, DC. The Center is open from noon to 4 p.m., Monday through Friday, excluding legal holidays. The telephone number for the Center is (202) 260–7099.

C. How and to Whom Do I Submit Comments?

You may submit comments through the mail, in person, or electronically. To ensure proper receipt by EPA, it is imperative that you identify docket control number OPPTS–50639C in the subject line on the first page of your response.

1. *By mail*. Submit your comments to: Document Control Office (7407M), Office of Pollution Prevention and Toxics (OPPT), Environmental Protection Agency, 1200 Pennsylvania Ave., NW., Washington, DC 20460.

2. *In person or by courier*. Deliver your comments to: OPPT Document Control Office (DCO) in Rm. 6428, EPA East, 1201 Constitution Ave., NW., Washington, DC. The DCO is open from 8 a.m. to 4 p.m., Monday through Friday, excluding legal holidays. The telephone number for the DCO is (202) 564–8930.

3. *Electronically*. You may submit your comments electronically by e-mail to: oppt.ncic@epa.gov, or mail your computer disk to the address identified above. Do not submit any information electronically that you consider to be CBI. Electronic comments must be submitted as an ASCII file avoiding the use of special characters and any form of encryption. Comments and data will also be accepted on standard disks in WordPerfect 6.1/8.0 or ASCII file format. All comments in electronic form must be identified by docket control number OPPTS–50639C. Electronic comments may also be filed online at many Federal Depository Libraries.

D. How Should I Handle CBI Information That I Want to Submit to the Agency?

Do not submit any information electronically that you consider to be CBI. You may claim information that you submit to EPA in response to this document as CBI by marking any part or all of that information as CBI. Information so marked will not be disclosed except in accordance with procedures set forth in 40 CFR part 2. In addition to one complete version of the comment that includes any information claimed as CBI, a copy of the comment that does not contain the information claimed as CBI must be submitted for inclusion in the public version of the official record. Information not marked confidential will be included in the public version of the official record without prior notice. If you have any questions about CBI or the procedures for claiming CBI, please consult the technical person

listed under **FOR FURTHER INFORMATION CONTACT**.

E. What Should I Consider as I Prepare My Comments for EPA?

We invite you to provide your views on the various options we propose, new approaches we have not considered, the potential impacts of the various options (including possible unintended consequences), and any data or information that you would like the Agency to consider during the development of the final action. You may find the following suggestions helpful for preparing your comments:

1. Explain your views as clearly as possible.
2. Describe any assumptions that you used.
3. Provide copies of any technical information and/or data you used that support your views.
4. If you estimate potential burden or costs, explain how you arrived at the estimate that you provide.
5. Provide specific examples to illustrate your concerns.
6. Offer alternative ways to improve the proposed rule or collection activity.
7. Make sure to submit your comments by the deadline in this document.
8. To ensure proper receipt by EPA, be sure to identify the docket control number assigned to this action in the subject line on the first page of your response. You may also provide the name, date, and **Federal Register** citation.

II. Background

A. What Action is the Agency Taking?

The Agency is supplementing the proposed SNUR published in the **Federal Register** of October 18, 2000 (65 FR 62319) (FRL–6745–5), to take into account comments submitted on that proposed rule, to amend the list of chemical substances to which the proposed SNUR would apply, and to more clearly define significant new uses of these chemical substances. This supplemental proposed rule would require persons to notify EPA at least 90 days before commencing the manufacture or import of the chemical substances identified in Table 2, Unit I.A., for the significant new uses described in this document. The chemical substances identified in Table 2, Unit I.A., are 75 chemical substances, including PFOSH, PFOSS, POSF, certain higher and lower homologues of PFOSH and POSF, and certain other chemical substances, including polymers, that are derived from PFOSH and its homologues. These chemicals are collectively referred to throughout this proposed rule as PFAS. In the original proposed SNUR, these chemicals were referred to collectively as perfluorooctylsulfonates, or PFOS, but commenters noted that this generic usage of the term PFOS was inconsistent with the use by the manufacturer, the Minnesota Mining and Manufacturing Company (3M), of PFOS to refer only to chemicals with an eight-carbon, or C8, chain length. Many of the chemicals in the proposed SNUR include a range of carbon chain lengths, although they all include C8 within the range. Accordingly, EPA will use the generic term PFAS to refer to any carbon chain length, including higher and lower homologues as well as C8, and the term PFOS to represent only those chemical substances which are predominantly C8.

The significant new uses described by this document are:

1. Any manufacture or import for any use of any chemical listed in Table 2, Unit I.A., on or after January 1, 2003, except as noted in Unit II.A.2.

2. Manufacture or import of any chemical listed in Table 2, Unit I.A., solely for one or more of the following specific uses shall not be considered as a significant new use subject to reporting under this section:

i. Use as an anti-erosion additive in fire-resistant phosphate ester aviation hydraulic fluids.

ii. Use as a component of a photoresist substance, including a photo acid generator or surfactant, or as a component of an anti-reflective coating, used in a photomicrolithography process to produce semiconductors or similar components of electronic or other miniaturized devices.

iii. Use as an intermediate only to produce other chemical substances to be used solely for the uses listed in Unit II.A.2.i. or ii.

iv. Use in a surface tension and static discharge control coating on films, papers, and printing plates, or as a surfactant or defoamer in solutions used to process films and papers, in traditional and laser medical imaging and in industrial and consumer film products.

B. What is the Agency's Authority for Taking this Action?

Section 5(a)(2) of TSCA (15 U.S.C. 2604(a)(2)) authorizes EPA to determine that a use of a chemical substance is a ''significant new use.'' The Agency makes this determination by rule after considering all relevant factors, including those listed in TSCA section 5(a)(2). These factors include the volume of a chemical substance's production; the extent to which a use changes the type, form, magnitude, or duration of exposure to the substance; and the reasonably anticipated manner of producing or otherwise managing the substance. Once EPA makes this determination and promulgates a SNUR, TSCA section 5(a)(1)(B) requires persons to submit a significant new use notice (SNUN) to EPA at least 90 days before they manufacture, import, or process the chemical substance for that significant new use (15 U.S.C. 2604 (a)(1)(B)).

C. Which General Provisions Apply?

General provisions for SNURs are published under 40 CFR part 721, subpart A. These provisions describe persons subject to the rule, recordkeeping requirements, exemptions to reporting requirements, and applicability of the rule to uses occurring before the effective date of the final rule. Note that because this proposed rule would designate certain manufacturing and importing activities as significant new uses, persons that solely process or use the chemical substances that would be covered by this action would not be subject to the rule. Provisions relating to user fees appear at 40 CFR part 700. Persons subject to this proposed SNUR would be required to comply with the same notice requirements and EPA regulatory procedures as submitters of PMNs under TSCA section 5(a)(1)(A). In particular, these requirements include: The information submission requirements of TSCA section 5(b) and 5(d)(1); the exemptions authorized by TSCA section 5 (h)(1), (2), (3), and (5); the export notification provisions of TSCA section 12(b); and the export notification requirements in 40 CFR part 707, subpart D. Once EPA receives a SNUN, EPA may take regulatory action under TSCA sections 5(e), 5(f), 6, or 7, if appropriate, to control the activities on which it has received the SNUN. If EPA does not take action, EPA is required under TSCA section 5(g) to explain in the **Federal Register** its reasons for not taking action.

III. Summary of this Supplemental Proposed Rule

The chemical substances subject to this supplemental proposed SNUR are listed in Table 2, Unit I.A. These chemical substances include PFOSH, PFOSS, POSF, certain higher and lower homologues of PFOSH and POSF, and certain other chemical substances, including polymers, that are derived from PFOSH and its homologues. All of these chemical substances are referred to collectively in this proposed rule as perfluoroalkyl sulfonates, or PFAS. In the original proposed SNUR (65 FR

62319, October 18, 2000), these chemicals had been referred to collectively as perfluorooctylsulfonates, or PFOS, but commenters noted that this generic usage of PFOS was inconsistent with 3M's use of PFOS to refer only to chemicals with an eight-carbon, or C8, chain length. Many of the chemicals in the proposed SNUR included a range of carbon chain lengths, although they all did include C8 within the range. Accordingly, EPA will use the generic term PFAS to refer to any chain length, including higher and lower homologues as well as C8, and the term PFOS to represent only those chemicals which are predominantly C8.

All of the chemical substances listed in this supplemental proposed SNUR have the potential to degrade to PFOSH in the environment. Information also suggests that these chemical substances may be converted to PFOSH via incomplete oxidation during the incineration of PFAS-containing materials. Once PFOSH has been released to the environment, it does not undergo further chemical (hydrolysis), microbial, or photolytic degradation. PFOSH is highly persistent in the environment and has a strong tendency to bioaccumulate. Studies have found PFOS chemicals in very small quantities in the blood of the general human population as well as in wildlife, indicating that exposure to the chemicals is widespread, and recent tests have raised concerns about their potential developmental, reproductive, and systemic toxicity (Refs. 1, 2, and 3). These facts, taken together, raise concerns for long term potential adverse effects in people and wildlife over time if PFOS should continue to be produced, released, and built up in the environment. A detailed discussion of these concerns appeared in the original proposed SNUR (65 FR 62319, October 18, 2000) and in the EPA Hazard Assessment document in the docket for the proposed SNUR (Ref. 4). In its comments on the proposed SNUR, 3M emphasized that no data indicated that adverse effects were currently being observed in humans and wildlife. 3M also noted that additional data under development might change some of the EPA's preliminary conclusions. 3M challenged the simplification in the preamble of EPA's characterization of certain of the hazard studies analyzed in the EPA Hazard Assessment, which 3M felt overstated some of the EPA's hazard conclusions. None of the other comments submitted on the proposal addressed the hazards, environmental fate, or exposures associated with these chemicals as described in the original proposed SNUR.

The original proposed SNUR included these and 15 other chemicals, and would have identified as a significant new use: Any manufacture or import of any of these chemicals for any use on or after January 1, 2003; and any manufacture or import in excess of specified volume limits between January 1, 2001, and December 31, 2002.

At the request of prospective commenters, EPA extended the date for submitting comments from November 17, 2000, to January 1, 2001 (65 FR 69889, November 21, 2000) (FRL–6756–9). Twenty-six timely comments were submitted on the proposed SNUR. Because of the complexity of the issues and the interest expressed by the commenters, EPA announced a public meeting on the proposed SNUR (66 FR 11243, February 23, 2001) (FRL–6771–4), which was conducted on March 27, 2001, to provide commenters with the opportunity to expand upon their comments, offer clarifications, and further explain their issues and concerns. At that meeting, several participants expressed a willingness to gather and submit additional information concerning their need for and specific use of certain of these chemicals, and EPA indicated that it would consider those post-meeting submissions as a formal part of the rulemaking record. EPA requested that these submissions include specific information on PFAS exposures and releases associated with various uses, as well as documentation about the extent to which PFAS chemical substances on the proposed SNUR lists were being obtained for specific uses from sources other than 3M, and thus would not be affected by 3M's unilateral decision to discontinue production. (Ref. 5) The final such submission was received by the EPA on October 3, 2001. All of these submissions are in the docket for this proceeding.

Following review and consideration of all the comments, correspondence, and additional submissions, EPA determined that the proposed SNUR should be promulgated as final for the 13 chemicals, employed principally in coatings for textiles, carpet, apparel, leather, and paper, on which no comments were received and which 3M, the sole manufacturer, confirmed were discontinued from manufacture before December 31, 2000. EPA also removed from the rule two chemicals that had appeared by error in the original proposed SNUR. That final rule is published elsewhere in today's issue of the **Federal Register**.

EPA determined that the remaining 75 chemicals, which appear in Table 2, Unit I.A., presented issues that warranted the proposal of this supplemental SNUR. Commenters provided information confirming that, contrary to the information available to the EPA when the original proposed SNUR was published, 3M was not the sole manufacturer of certain of the chemical substances on Table 2, Unit I.A., which commenters were importing in small quantities below mandatory reporting thresholds for their specific uses from non-3M sources outside the United States prior to the publication of the proposed SNUR. The identities, amounts, and suppliers of those specific chemicals were claimed as confidential business information (CBI), and thus cannot be specifically identified in this proposed rule.

To the extent that specific PFAS chemical substances on the proposed SNUR lists were being obtained from sources other than 3M for specific uses prior to the publication of the proposed SNUR, and thus would not be affected by 3M's unilateral decision to discontinue production, those particular uses of those specific chemicals would be considered ongoing and would not be subject to a significant new use determination. These specific uses are: As a component of a photoresist substance, including a photo acid generator or surfactant, or as a component of an anti-reflective coating, used in a photomicrolithography process to produce semiconductors or similar components of electronic or other miniaturized devices.

Accordingly, this supplemental proposed SNUR identifies these specific uses of those particular chemicals as not being significant new uses of the chemicals listed in Table 2, Unit I.A., and thus as not being subject to this proposed SNUR.

Some commenters in this industry who were not importing from non-3M sources indicated that they were using certain chemicals listed in the proposed SNUR, as well as other PFAS chemicals that were not included in the proposed SNUR. Both individually and through an industry-wide submission of mass balance data tracking the use and final disposition of these PFAS chemicals, all commenters in this industry indicated that these chemicals were used in very small quantities under 2,000 kilograms (kg) (4,400 lbs) per year total in the United States, under controlled conditions that virtually eliminated occupational exposures to the chemicals and presented very low releases to the environment. They also presented information on the lack of viable

alternatives for these chemicals because of their unique performance characteristics, and described their efforts to further reduce the use of PFAS chemicals and to continually improve their handling and disposal practices to reduce or eliminate PFAS exposures and releases. (Ref. 6)

Given the extremely low volume of use and the stringent controls on exposure and releases, EPA is proposing not to include in the definition of significant new use the manufacture or import of chemicals listed in Table 2, Unit I.A., including chemicals which had not been imported from non-3M sources prior to the publication of the proposed SNUR, for use as a component of a photoresist substance, including a photo acid generator or surfactant, or a component of an anti-reflective coating, used in a photomicrolithography process to produce semiconductors or similar components of electronic or other miniaturized devices. EPA is proposing this exclusion in recognition of the industry's commitment to continue to pursue better controls to ensure that this use will not increase the type, magnitude, or duration of exposure to PFAS chemicals.

Three commenters also provided information indicating that their specific use of the 3M formulations FC93 and FC98, which contain three of the PFAS chemicals (CAS Nos. 2795–39–3, 67584–42–3, and 68156–01–4) listed in Table 2, Unit I.A, as an anti-erosion additive in fire-resistant phosphate ester aviation hydraulic fluids, was critical to the safe performance of large cargo and passenger aircraft, and that there are at present no viable alternatives to PFAS for this use. These commenters also indicated that, although 3M has been their source, the PFAS chemicals used in this application have also been produced by other foreign sources prior to the publication of the SNUR, although they have not been imported. They reported that the total aggregate use of PFAS in this application by all aviation consumers is less than 5,000 lbs per year (2,273 kg), and that because these systems are sealed at the time of manufacture, worker exposures and releases to the environment are minimal. They noted that ongoing research for possible replacement chemicals could not produce viable alternatives for several years, because of requirements that these products meet military specifications or gain approval from the Federal Aviation Administration (FAA). (Refs. 7, 8, 9, and 10) Based on the information presented, including the very low volume of use and the low potential for exposure, as well as the critical safety nature of the use, EPA proposes to exclude the manufacture or import of these PFAS chemicals for use in this application from the definition of significant new use.

Commenters in the semiconductor and aviation hydraulics industries also indicated that, in order to produce the specific PFAS chemicals used in their applications, certain additional chemicals on the list in Table 2, Unit I.A., would be required for use as intermediate chemicals in the manufacturing process. Accordingly, EPA proposes to exclude from the significant new use definition the use of these PFAS chemicals as intermediates only to produce other chemicals used solely for the excluded semiconductor and aviation hydraulics uses.

Commenters in the photography industry, in addition to raising the semiconductor applications addressed earlier in this section, also identified as critical the use of certain PFAS chemicals in surface tension and static discharge control coatings on films, papers, and printing plates, and as surfactants and defoamers in solutions used to process films and papers, particularly in both traditional and laser medical imaging and in some industrial and consumer film products. The industry estimated the total annual use of these PFAS chemicals in medical imaging for disease diagnosis at 30,600 kg (67,320 lbs), with another 5,400 kg (11,880 lbs) used per year in industrial (i.e., oil pipeline x-ray; aerial reconnaissance photography) and some consumer applications. Some information on specific chemicals used in these applications, as well as on the sources of those chemicals, was claimed as confidential. Specific information on exposures and releases from all these uses was not provided. These commenters indicated that they were conducting research to find alternatives to these PFAS chemicals in these uses, but that they believed they would not be able to find and technically qualify viable alternatives for use before the end of the phase-out period. (Refs. 11 and 12)

EPA is proposing to exclude these photographic uses from the definition of significant new use in the SNUR, based on its understanding that the industry is actively working to move away from these PFAS chemicals and to reduce the use and release of PFAS. EPA is concerned, however, that these uses, while much lower in volume than the discontinued coating uses on textiles, apparel, carpet, furniture, and paper, are substantially greater in volume than the semiconductor and aviation uses for which exclusions are being proposed, and much less is known about the extent of exposures and releases related to these uses. EPA is concerned that new manufacture or importation for these photographic uses may significantly affect the type, magnitude, and duration of exposure to these chemicals because of their known persistence. EPA therefore specifically requests comment on this proposed exclusion of these photographic uses from the significant new use definition, particularly addressing the anticipated exposures and releases that may result from these uses, and including information on handling and disposal controls that would control, reduce, or eliminate such exposures and releases. In the absence of such information to confirm the Agency's understanding and support the proposed exclusion, EPA may include these photographic uses in the definition of significant new uses that would be subject to this SNUR at such time as a final rule is promulgated, perhaps defining the new use based on a volume cap on new manufacture or importation intended for this use.

Accordingly, EPA proposes to require persons to notify EPA at least 90 days before commencing the manufacture or import of the chemical substances identified in Table 2, Unit I.A., for the significant new uses described in this document. The significant new uses described by this notice are:

1. Any manufacture or import for any use of any chemical listed in Table 2 of Unit I.A., on or after January 1, 2003, except as noted Unit III.2.

2. Manufacture or import of any chemical listed in Table 2, Unit I.A., solely for one or more of the following specific uses shall not be considered as a significant new use subject to reporting under this section:

i. Use as an anti-erosion additive in fire-resistant phosphate ester aviation hydraulic fluids.

ii. Use as a component of a photoresist substance, including a photo acid generator or surfactant, or as a component of an anti-reflective coating, used in a photomicrolithography process to produce semiconductors or similar components of electronic or other miniaturized devices.

iii. Use as an intermediate only to produce other chemical substances to be used solely for the uses listed in Unit III.2.i. or ii.

iv. Use in a surface tension and static discharge control coating on films, papers, and printing plates, or as a surfactant or defoamer in solutions used to process films and papers, in traditional and laser medical imaging

and in industrial and consumer film products.

IV. Applicability of Proposed Rule to Uses Occurring Before the Effective Date of the Final Rule

EPA believes that the intent of TSCA section 5(a)(1)(B) is best served by designating a use as a significant new use as of the proposal date of the SNUR, rather than as of the effective date of the final rule. If uses begun after publication of the proposed SNUR were considered to be ongoing, rather than new, it would be difficult for EPA to establish SNUR notice requirements, because any person could defeat the SNUR by initiating the proposed significant new use before the rule became final, and then argue that the use was ongoing.

Persons who begin commercial manufacture or import of the PFAS chemicals listed in Table 2, Unit I.A., for the significant new uses listed in this proposed SNUR after the proposal has been published must stop that activity before the effective date of the final rule. Persons who ceased those activities will have to meet all SNUR notice requirements and wait until the end of the notice review period, including all extensions, before engaging in any activities designated as significant new uses. If, however, persons who begin commercial manufacture or import of these chemical substances between the proposal and the effective date of the SNUR meet the conditions of advance compliance as codified at 40 CFR 721.45(h), those persons will be considered to have met the final SNUR requirements for those activities.

V. Summary and Response to Comments on Original Proposed Rule

EPA received 26 timely comments on the original proposed SNUR, and numerous additional presentations and correspondence at and following the public meeting. As described in this unit and in Unit III., all of these materials were taken into consideration in the preparation of this supplemental proposed SNUR. All of these materials have been placed in docket OPPTS–50639.

One comment addressed the use of PFOS in aqueous film-forming foam (AFFF) fire fighting products, and commended the Agency for terminating this application. 3M voluntarily exited this market, and was the only producer of PFOS-based AFFF, although non-PFOS-based AFFF products using other fluorinated surfactants remain in use and are unaffected by this proposed regulation. EPA is continuing to investigate these related fluorinated surfactants to determine whether they may present issues and concerns similar to those associated with PFOS.

One comment indicated that certain of the chemicals on the list were in use and registered as active ingredients in pesticide formulations, and that chemicals in such use, being regulated by the Federal Insecticide, Fungicide, and Rodenticide Act (FIFRA), would be excluded from the TSCA definition of a ''chemical substance'' and would thus not be subject to the proposed SNUR or other reporting requirements under TSCA. Pesticides are excluded from regulation under TSCA, although pesticide intermediates (chemicals manufactured for the purpose of producing regulated pesticide ingredients) are subject to TSCA regulation. Following the publication of the proposed SNUR, however, the pesticide registrants voluntarily negotiated product stewardship agreements with the EPA Office of Pesticide Programs to cancel some registered products and to phase out others.

Three commenters noted that three PFAS chemicals included in the proposed SNUR (CAS Nos. 2795–39–3, 67584–42–3, and 68156–01–4) were components of 3M products FC93 and FC 98, currently being used in very small concentrations (generally less than 500 parts per million (ppm), or 0.05% PFOS) as anti-erosion additives in fire-resistant phosphate ester aviation hydraulic fluids, and that these uses were critical to the safe functioning of control surfaces, brakes, steering, and landing gear on virtually all large cargo, military, and passenger transport aircraft. The commenters indicated that untreated phosphate ester fluids, used for their high fire resistance, support electrochemical erosion of control valves within sealed hydraulic systems, and that these PFAS chemicals were the only additives discovered in twenty years of research that could eliminate this problem. They indicated that the total aggregate use of PFAS in this application by all aviation consumers is less than 5,000 lbs (2,273 kg) per year, and that because these systems are sealed at the time of manufacture, worker exposures and releases to the environment are minimal. They noted that ongoing research for possible replacement chemicals could not produce any viable alternatives for several years, because of requirements that these products meet military specifications or gain approval from FAA. Given the low volumes involved, the minimal exposure and release potential, the aviation safety requirements, and the demonstrated lack of viable alternatives, EPA is proposing to exclude the manufacture or importation of PFAS chemicals specifically for use as an anti-erosion additive in fire-resistant phosphate ester aviation hydraulic fluids from the definition of significant new use to which this proposed SNUR would apply. No SNUN would thus be required from a company or individual manufacturing or importing any of the PFAS chemicals on Table 2, Unit I.A., for this specific use.

Several companies in the semiconductor industry submitted comments and participated in meetings both individually and through their respective trade associations, indicating that 3M was not the only supplier of the specific PFAS chemicals used in their particular applications; some companies supplied confidential data indicating that they had been importing very small quantities of certain of these chemicals from non-3M sources. At the time the original SNUR was proposed, EPA was unaware that this importation was taking place, because the quantities involved were below the threshold for reporting such importation to the EPA. Both individually and through an industry-wide mass balance submission, the commenters indicated that these chemicals were used in very small quantities, under 2,000 kg (4,400 lbs) per year total in the United States, under controlled conditions that virtually eliminated occupational exposures to the chemicals. They also presented information concerning their search for and conversion to non-PFOS chemicals in certain applications, as well as ongoing modifications to their wastewater handling and treatment operations that would dramatically reduce their PFAS releases to the environment. They expressed an interest in continuing to work with the EPA to further reduce the use of PFAS, but indicated that, at present, viable alternatives for PFAS have not been qualified for two uses critical to both the commercial success of the industry and to its technological contributions to national security: as a component of a photoresist substance, including a photo acid generator or surfactant, or as a component of an anti-reflective coating, used in a photomicrolithography process to produce semiconductors or similar components of electronic or other miniaturized devices.

Because companies had been importing certain of the chemical substances on Table 2, Unit I.A., in very small quantities from non-3M sources for use as a component of a photoresist substance or an anti-reflective coating used in a photomicrolithography process prior to the publication of the

original proposed SNUR, EPA considers those uses of those particular substances to be ongoing, and the continuing manufacture or import of those specific PFAS chemicals for those uses, particularly in the small amounts and under the types of exposure and release controls described by the commenters, would thus not be subject to the SNUR, as reflected in this supplemental proposal. EPA further proposes to exclude from the significant new use definition these specific uses of the additional PFAS chemicals on Table 2, Unit I.A, which had not previously been imported into the United States from non-3M sources. In proposing this exclusion, EPA recognizes that the amounts involved are small, and that the industry has committed to continue to pursue better controls to ensure that this use will not increase the type, magnitude, or duration of exposure to PFAS chemicals. No SNUN would thus be required from a company or individual manufacturing or importing any of the PFAS chemicals on Table 2, Unit I.A. for this specific use.

Commenters in both the aviation and semiconductor industries also indicated that certain chemical substances listed in the SNUR are essential chemical intermediates required to make the PFAS products that are actually used in electronics manufacture and hydraulic fluids. EPA proposes to exclude from the significant new use definition the use of listed PFAS chemicals as intermediates only to produce other chemical substances to be used solely for the semiconductor and aviation uses already described.

EPA commends the aviation and semiconductor industries in particular for their diligence in providing useful tools and information and in working with the Agency to achieve a full understanding of the issues presented by PFAS in these industries. EPA further acknowledges their pledge to continue to work toward further reductions in the use and release of PFAS chemicals notwithstanding the proposed identification of these low volume, low release, and controlled exposure uses as not included within the definition of significant new uses subject to this SNUR.

Four companies and a trade association presented comments and supplementary correspondence concerning the use of PFAS chemicals in the photography industry. To the extent that those comments concerned photomicrolithography in the semiconductor context, they are addressed above in the EPA's response to the semiconductor industry in this unit. Separately from the semiconductor issues, the photography industry also identified as critical the use of certain PFAS chemicals in surface tension and static discharge control coatings on films, papers, and printing plates, and as surfactants and defoamers in solutions used to process films and papers, particularly in both traditional and laser medical imaging and in some industrial and consumer film products. The industry estimated the total annual use of these PFAS chemicals in medical imaging for disease diagnosis at 30,600 kg (67,320 lbs), with another 5,400 kg (11,880 lbs) used per year in industrial (i.e., oil pipeline x-ray; aerial reconnaissance photography) and some consumer applications. Specific information on exposures and releases from all these uses was not provided. Some of the specific chemicals used, the sources from which those chemicals were obtained, and the amounts used by individual companies were claimed as confidential business information. The photographic industry commenters expressed willingness to work toward reducing the amount of PFAS being used in their applications, but indicated concern that viable alternatives might not be available or qualified by the phase-out date announced by 3M and reflected in the original proposed SNUR. They requested an extension of the phase-out period for their claimed critical use applications.

The phase-out dates in the original proposed SNUR were determined by 3M's voluntary commitment to discontinue production of these PFAS chemicals. The basis for EPA's original SNUR proposal was that any production of these chemicals following the 3M phaseout would by definition be new, since at the time the proposal issued, 3M had been the sole producer; and any new production would necessarily affect the type, magnitude, and duration of exposure, because these chemicals are persistent. New production would add to the base amount of these chemicals already present in the environment, and widespread exposure to these chemicals has been demonstrated through the detection of PFOS in the blood of the general population and of wildlife.

The commenters did not propose a time frame for an extended phase-out of these chemicals for their specific use. Because the amount of time that might be required is uncertain, instead of proposing a specific extension of the phase-out period, EPA is proposing to exclude these photographic uses from the definition of a significant new use under the SNUR, on the understanding that the industry is actively working to move away from these PFAS chemicals and to reduce the use and release of PFAS. EPA is concerned, however, that these uses, while much lower in volume than the discontinued coating uses on textiles, apparel, carpet, furniture, and paper, are substantially greater than the semiconductor and aviation uses for which exclusions are also being proposed, and much less is known about the extent of exposures and releases related to these uses. EPA is concerned that these photographic uses may significantly affect the type, magnitude, and duration of exposure to these chemicals because of their known persistence. EPA therefore specifically requests comment on this proposed exclusion of these photographic uses, particularly addressing the anticipated exposures and releases that may result from these uses, and including information on handling and disposal controls that would control, reduce, or eliminate such exposures and releases. In the absence of such information to confirm the Agency's understanding and support the proposed exclusion, EPA may include these photographic uses in the definition of significant new uses that would be subject to this SNUR at such time as a final rule is promulgated, perhaps defining the new use based on a volume cap on new manufacture or importation intended for this use.

One commenter indicated that it imported small quantities of some of the chemicals listed in the original proposed SNUR for various applications, but gave no further information to identify which chemicals it imported, or whether 3M—which has production facilities abroad—was the source of the imported chemicals. Some of the uses mentioned in this comment have been addressed in this unit in the contexts of the industries which provided more details on use. Without more specific substantiation of the asserted importation, this comment cannot be further addressed.

One private citizen commended the EPA for taking action on PFOS, but noted that there must be more PFAS chemicals on the Inventory than were listed in the original SNUR, and that similar action should be taken to address those other chemicals. EPA is evaluating other PFAS and PFAS-related chemicals, but used the mechanism of the proposed SNUR to address the specific chemicals that it had sufficient reason to believe were either not currently in use or were being phased out by their sole producer. If regulatory action on other PFAS or PFAS-related chemicals is warranted, EPA will propose appropriate action when its evaluation is complete.

The National Aeronautics and Space Administration (NASA) noted that it used many chemicals in its Space Shuttle program and was not certain at the time of its initial comment submission whether those would include any of the PFAS chemicals in the proposed SNUR. EPA has not received any subsequent communications from NASA that would indicate that NASA concluded that the proposed SNUR would present issues.

3M provided comments suggesting some changes in the acronyms used in the proposed SNUR to make them consistent with the nomenclature customarily used by 3M and the industry. 3M also requested minor changes to the two tables of chemicals listed in the SNUR to correct the assignment of four chemicals to the wrong table, and to remove two chemicals that had not been included in 3M's phaseout plan. EPA adopted the 3M nomenclature and made the table adjustments. 3M emphasized that no data indicated that adverse effects were currently being observed in humans and wildlife. 3M also noted that additional data under development might change some of the EPA's preliminary conclusions. 3M challenged the simplification in the preamble of EPA's characterization of certain of the hazard studies analyzed in the EPA Hazard Assessment, which 3M felt overstated some of the hazard conclusions that were drawn in the assessment. 3M requested that these statements be rephrased more accurately in any discussion of hazard in the final rule.

VI. References

These references have been placed in the official record that was established under docket control number OPPTS–50639 for this rulemaking as indicated in Unit I.B.2. Reference documents identified with an Administrative Record number (AR) are cross-indexed to non-regulatory, publicly accessible information files maintained in the TSCA Nonconfidential Information Center. Copies of these documents can be obtained as described in Unit I.B.2.

1. (AR226–0620) Sulfonated Perfluorochemicals in the Environment: Sources, Dispersion, Fate, and Effects. 3M. St. Paul, MN. March 1, 2000.

2. (AR226–0547) The Science of Organic Fluorochemistry. 3M. St. Paul, MN. February 5, 1999.

3. (AR226–0548) Perfluorooctane Sulfonate: Current Summary of Human Sera, Health and Toxicology Data. 3M. St. Paul, MN. January 21, 1999.

4. Seed, Jennifer. Hazard Assessment and Biomonitoring Data on Perfluorooctane Sulfonate—PFOS. USEPA/OPPT/RAD. Washington, DC. August 31, 2000.

5. Dominiak, Mary. PFOS Public Meeting Summary and Attendee List. USEPA/OPPT/CCD. Washington, DC. April 27, 2001.

6. Harper, Stephen and Dripps, Greg. Letter (with appendices) to Charles M. Auer. Semicondustor Industry Association and Semiconductor Equipment and Materials International. Washington, DC. October 3, 2001.

7. Jarnot, Bruce. Comments of ExxonMobil Lubricants and Petroleum Specialties. Fairfax, VA. November 16, 2000.

8. Frank, Matthew. Comments of Boeing. Arlington, VA. November 17, 2000.

9. Downes, Jim. Comments of Solutia. St. Louis, MO. November 13, 2000.

10. Downes, Jim. Supplementary Comments of Solutia at EPA Public Meeting. Washington, DC. March 27, 2001.

11. O'Donoghue, John. PFOS and Imaging. Presentation of Photographic and Imaging Manufacturers Association at EPA Public Meeting. Washington, DC. March 27, 2001.

12. O'Donoghue, John. Letter to Charles M. Auer, Followup to the March 27, 2001 Public Meeting. Rochester, NY. April 24, 2001.

VII. Regulatory Assessment Requirements

Under Executive Order 12866, entitled *Regulatory Planning and Review* (58 FR 51735, October 4, 1993), the Office of Management and Budget (OMB) has determined that SNURs are not a ''significant regulatory action'' subject to review by OMB, because SNURs do not meet the criteria in section 3(f) of the Executive order.

Based on EPA's experience with past SNURs, State, local, and tribal governments have not been impacted by these rules, and EPA does not have any reasons to believe that any State, local, or tribal government will be impacted by this proposed rule. As such, EPA has determined that this regulatory action does not impose any enforceable duty, contain any unfunded mandate, or otherwise have any affect on small governments subject to the requirements of sections 202, 203, 204, or 205 of the Unfunded Mandates Reform Act of 1995 (UMRA) (Public Law 104–4).

This proposed rule does not have tribal implications because it is not expected to have substantial direct effects on Indian Tribes. This does not significantly or uniquely affect the communities of Indian tribal governments, nor does it involve or impose any requirements that affect Indian Tribes. Accordingly, the requirements of section 3(b) of Executive Order 13084, entitled *Consultation and Coordination with Indian Tribal Governments* (63 FR 276755, May 19, 1998), do not apply to this proposed rule. Executive Order 13175, entitled *Consultation and Coordination with Indian Tribal Governments* (65 FR 67249, November 6, 2000), which took effect on January 6, 2001, revokes Executive Order 13084 as of that date. EPA developed this proposed rule, however, during the period when Executive Order 13084 was in effect; thus, EPA addressed tribal considerations under Executive Order 13084. For the same reasons stated for Executive Order 13084, the requirements of Executive Order 13175 do not apply to this proposed rule either. Nor will this action have a substantial direct effect on States, on the relationship between the national government and the States, or on the distribution of power and responsibilities among the various levels of government, as specified in Executive Order 13132, entitled *Federalism* (64 FR 43255, August 10, 1999).

This proposed rule is not subject to Executive Order 13211, entitled *Actions Concerning Regulations That Significantly Affect Energy Supply, Distribution, or Use* (66 FR 28355, May 22, 2001), because this action is not expected to affect energy supply, distribution, or use.

In issuing this proposed rule, EPA has taken the necessary steps to eliminate drafting errors and ambiguity, minimize potential litigation, and provide a clear legal standard for affected conduct, as required by section 3 of Executive Order 12988, entitled *Civil Justice Reform* (61 FR 4729, February 7, 1996).

EPA has complied with Executive Order 12630, entitled *Governmental Actions and Interference with Constitutionally Protected Property Rights* (53 FR 8859, March 15, 1988), by examining the takings implications of this proposed rule in accordance with the ''Attorney General's Supplemental Guidelines for the Evaluation of Risk and Avoidance of Unanticipated Takings'' issued under the Executive order.

This action does not involve special considerations of environmental justice related issues as required by Executive Order 12898, entitled *Federal Actions to Address Environmental Justice in Minority Populations and Low-Income Populations* (59 FR 7629, February 16, 1994).

This action is not subject to Executive Order 13045, entitled *Protection of*

Children from Environmental Health Risks and Safety Risks (62 FR 19885, April 23, 1997), because this is not an economically significant regulatory action as defined by Executive Order 12866, and this action does not address environmental health or safety risks disproportionately affecting children.

In addition, since this action does not involve any technical standards, section 12(d) of the National Technology Transfer and Advancement Act of 1995 (NTTAA), Public Law 104–113, section 12(d) (15 U.S.C. 272 note), does not apply to this action.

Pursuant to section 605(b) of the Regulatory Flexibility Act (RFA) (5 U.S.C. 601 *et seq.*), the Agency hereby certifies that promulgation of this SNUR will not have a significant adverse economic impact on a substantial number of small entities. A SNUR applies to any person (including small or large entities) who intends to engage in any activity described in the rule as a ''significant new use.'' Based on all information currently available to EPA, it appears that no small or large entities currently engage in such activity. Since a SNUR requires merely that any person who intends to engage in such activity in the future must first notify EPA (by submitting a SNUN), no economic impact will even occur until someone decides to engage in those activities. As a voluntary action, it is reasonable to presume that this decision would be based on a determination by the person submitting the SNUN that the potential benefits would outweigh the costs. Although some small entities may decide to conduct such activities in the future, EPA cannot presently determine how many, if any, there may be. EPA's experience to date is that, in response to the promulgation of over 530 SNURs, the Agency has received fewer than 15 SNUNs. Of those SNUNs submitted, none appear to be from small entities. In fact, EPA expects to receive few, if any, SNUNs from either large or small entities in response to any SNUR. Therefore, EPA believes that, the economic impact of complying with a SNUR is not expected to be significant or adversely impact a substantial number of small entities. This rationale has been provided to the Chief Counsel for Advocacy of the Small Business Administration.

According to the Paperwork Reduction Act (PRA), 44 USC 3501 *et seq.*, an agency may not conduct or sponsor, and a person is not required to respond to a collection of information that requires OMB approval under the PRA, unless it has been approved by OMB and displays a currently valid OMB control number. The OMB control numbers for EPA's regulations, after initial display in the **Federal Register** and in addition to its display on any related collection instrument, are listed in 40 CFR part 9.

The information collection requirements related to this action have already been approved by OMB pursuant to the PRA under OMB control number 2070–0038 (EPA ICR No. 1188.06). This action does not impose any burden requiring additional OMB approval. If an entity were to submit a SNUN to the Agency, the annual burden is estimated to average between 98.96 and 118.92 hours per response at an estimated reporting cost of between $5,957 and $7,192 per SNUN. This burden estimate includes the time needed to review instructions, search existing data sources, gather and maintain the data needed, and complete, review and submit the required SNUN, and maintain the required records. This burden estimate does not include 1 hour of technical time at $64.30 per hour estimated to be required for customer notification of SNUR requirements, or the $2,500 user fee for submission of a SNUN ($100 for businesses with less than $40 million in annual sales).

Send any comments about the accuracy of the burden estimate, and any suggested methods for minimizing respondent burden, including through the use of automated collection techniques, as instructed in Unit I.D. or to the Director, Collection Strategies Division, Office of Environmental Information, Environmental Protection Agency (2822), 1200 Pennsylvania Ave., NW., Washington, DC 20460. Please remember to include the OMB control number in any correspondence, but do not submit any completed forms to this address.

List of Subjects in 40 CFR Part 721

Environmental protection, Chemicals, Hazardous materials, Reporting and recordkeeping requirements, Significant new uses.

Dated: March 4, 2002.

William H. Sanders, III,

Director, Office of Pollution Prevention and Toxics.

Therefore, it is proposed that 40 CFR chapter I be amended as follows:

PART 721—[AMENDED]

1. The authority citation for part 721 would continue to read as follows:

Authority: 15 U.S.C. 2604, 2607, and 2625(c).

2. By revising § 721.9582 in subpart E to read as follows:

§ 721.9582 Certain perfluoralkyl sulfonates.

(a) *Chemical substances and significant new uses subject to reporting.* (1) The chemical substances listed in Table 1 and Table 2 of this paragraph are subject to reporting under this section for the significant new uses described in paragraph (a)(2) of this section.

TABLE 1.—PFAS CHEMICALS SUBJECT TO REPORTING ON OR AFTER JANUARY 1, 2001

CAS No./PMN	CAS Ninth Collective Index Name
2250–98–8	1-Octanesulfonamide, N,N',N''-[phosphinylidynetris(oxy-2,1-ethanediyl)]tris[N-ethyl-1,1,2,2,3,3,4,4,5,5,6,6,7,7,8,8,8-heptadecafluoro-
30381–98–7	1-Octanesulfonamide, N,N'-[phosphinicobis(oxy-2,1-ethanediyl)]bis[N-ethyl-1,1,2,2,3,3,4,4,5,5,6,6,7,7,8,8,8-heptadecafluoro-, ammonium salt
57589–85–2	Benzoic acid, 2,3,4,5-tetrachloro-6-[[[3-[[(heptadecafluorooctyl)sulfonyl]oxy]phenyl]amino]carbonyl]-, monopotassium salt
61660–12–6	1-Octanesulfonamide, N-ethyl-1,1,2,2,3,3,4,4,5,5,6,6,7,7,8,8,8-heptadecafluoro-N-[3-(trimethoxysilyl)propyl]-
67969–69–1	1-Octanesulfonamide, N-ethyl-1,1,2,2,3,3,4,4,5,5,6,6,7,7,8,8,8-heptadecafluoro-N-[2-(phosphonooxy)ethyl]-, diammonium salt

TABLE 1.—PFAS CHEMICALS SUBJECT TO REPORTING ON OR AFTER JANUARY 1, 2001—Continued

CAS No./PMN	CAS Ninth Collective Index Name
68608–14–0	Sulfonamides, C4-8-alkane, perfluoro, N-ethyl-N-(hydroxyethyl), reaction products with 1,1'-methylenebis[4-isocyanatobenzene]
70776–36–2	2-Propenoic acid, 2-methyl-, octadecyl ester, polymer with 1,1-dichloroethene, 2-[[(heptadecafluorooctyl)sulfonyl]methylamino]ethyl 2-propenoate, N-(hydroxymethyl)-2-propenamide, 2-[methyl[(nonafluorobutyl)sulfonyl]amino]ethyl 2-propenoate, 2-[methyl[(pentadecafluoroheptyl)sulfonyl]amino]ethyl 2-propenoate, 2-[methyl[(tridecafluorohexyl)sulfonyl]amino]ethyl 2-propenoate and 2-[methyl[(undecafluoropentyl)sulfonyl]amino]ethyl 2-propenoate
127133–66–8	2-Propenoic acid, 2-methyl-, polymers with Bu methacrylate, lauryl methacrylate and 2-[methyl[(perfluoro-C4-8-alkyl)sulfonyl]amino]ethyl methacrylate
148240–78–2	Fatty acids, C18-unsatd., trimers, 2-[[(heptadecafluorooctyl)sulfonyl]methylamino]ethyl esters
148684–79–1	Sulfonamides, C4-8-alkane, perfluoro, N-(hydroxyethyl)-N-methyl, reaction products with 1,6-diisocyanatohexane homopolymer and ethylene glycol
178535–22–3	Sulfonamides, C4-8-alkane, perfluoro, N-ethyl-N-(hydroxyethyl)-, polymers with 1,1'-methylenebis[4-isocyanatobenzene] and polymethylenepolyphenylene isocyanate, 2-ethylhexyl esters, Me Et ketone oxime-blocked
P–94–2205	Polymethylenepolyphenylene isocyanate and bis(4-NCO-phenyl)methane reaction products with 2-ethyl-1-hexanol, 2-butanone, oxime, N-ethyl-N-(2- hydroxyethyl)-1-C4-C8 perfluoroalkanesulfonamide
P–96–1645 306974–63–0	Fatty acids, C18-unsatd., dimers, 2-[methyl[(perfluoro-C4-8-alkyl)sulfonyl]amino]ethyl esters

TABLE 2.—PFAS CHEMICALS SUBJECT TO REPORTING ON OR AFTER JANUARY 1, 2003

CAS No./PMN	CAS Ninth Collective Index Name
307–35–7	1-Octanesulfonyl fluoride, 1,1,2,2,3,3,4,4,5,5,6,6,7,7,8,8,8-heptadecafluoro-
307–51–7	1-Decanesulfonyl fluoride, 1,1,2,2,3,3,4,4,5,5,6,6,7,7,8,8,9,9,10,10,10-heneicosafluoro-
376–14–7	2-Propenoic acid, 2-methyl-, 2-[ethyl[(heptadecafluorooctyl)sulfonyl]amino]ethyl ester
383–07–3	2-Propenoic acid, 2-[butyl[(heptadecafluorooctyl)sulfonyl]amino]ethyl ester
423–50–7	1-Hexanesulfonyl fluoride, 1,1,2,2,3,3,4,4,5,5,6,6,6-tridecafluoro-
423–82–5	2-Propenoic acid, 2-[ethyl[(heptadecafluorooctyl)sulfonyl]amino]ethyl ester
754–91–6	1-Octanesulfonamide, 1,1,2,2,3,3,4,4,5,5,6,6,7,7,8,8,8-heptadecafluoro-
1652–63–7	1-Propanaminium, 3-[[(heptadecafluorooctyl)sulfonyl]amino]-N,N,N-trimethyl-, iodide
1691–99–2	1-Octanesulfonamide, N-ethyl-1,1,2,2,3,3,4,4,5,5,6,6,7,7,8,8,8-heptadecafluoro-N-(2-hydroxyethyl)-
1763–23–1	1-Octanesulfonic acid, 1,1,2,2,3,3,4,4,5,5,6,6,7,7,8,8,8-heptadecafluoro-
2795–39–3	1-Octanesulfonic acid, 1,1,2,2,3,3,4,4,5,5,6,6,7,7,8,8,8-heptadecafluoro-, potassium salt
2991–51–7	Glycine, N-ethyl-N-[(heptadecafluorooctyl)sulfonyl]-, potassium salt
4151–50–2	1-Octanesulfonamide, N-ethyl-1,1,2,2,3,3,4,4,5,5,6,6,7,7,8,8,8-heptadecafluoro-
14650–24–9	2-Propenoic acid, 2-methyl-, 2-[[(heptadecafluorooctyl)sulfonyl]methylamino]ethyl ester
17202–41–4	1-Nonanesulfonic acid, 1,1,2,2,3,3,4,4,5,5,6,6,7,7,8,8,9,9,9-nonadecafluoro-, ammonium salt
24448–09–7	1-Octanesulfonamide, 1,1,2,2,3,3,4,4,5,5,6,6,7,7,8,8,8-heptadecafluoro-N-(2-hydroxyethyl)-N-methyl-
25268–77–3	2-Propenoic acid, 2-[[(heptadecafluorooctyl)sulfonyl]methylamino]ethyl ester
29081–56–9	1-Octanesulfonic acid, 1,1,2,2,3,3,4,4,5,5,6,6,7,7,8,8,8-heptadecafluoro-, ammonium salt
29117–08–6	Poly(oxy-1,2-ethanediyl), .alpha.-[2-[ethyl[(heptadecafluorooctyl)sulfonyl]amino]ethyl]-.omega.-hydroxy-
29457–72–5	1-Octanesulfonic acid, 1,1,2,2,3,3,4,4,5,5,6,6,7,7,8,8,8-heptadecafluoro-, lithium salt

TABLE 2.—PFAS CHEMICALS SUBJECT TO REPORTING ON OR AFTER JANUARY 1, 2003—Continued

CAS No./PMN	CAS Ninth Collective Index Name
31506–32–8	1-Octanesulfonamide, 1,1,2,2,3,3,4,4,5,5,6,6,7,7,8,8,8-heptadecafluoro-N-methyl-
38006–74–5	1-Propanaminium, 3-[[(heptadecafluorooctyl)sulfonyl]amino]-N,N,N-trimethyl-, chloride
38850–58–7	1-Propanaminium, N-(2-hydroxyethyl)-N,N-dimethyl-3-[(3-sulfopropyl)[(tridecafluorohexyl)sulfonyl]amino]-, inner salt
55120–77–9	1-Hexanesulfonic acid, 1,1,2,2,3,3,4,4,5,5,6,6,6-tridecafluoro-, lithium salt
67584–42–3	Cyclohexanesulfonic acid, decafluoro(pentafluoroethyl)-, potassium salt
67906–42–7	1-Decanesulfonic acid, 1,1,2,2,3,3,4,4,5,5,6,6,7,7,8,8,9,9,10,10,10-heneicosafluoro-, ammonium salt
68156–01–4	Cyclohexanesulfonic acid, nonafluorobis(trifluoromethyl)-, potassium salt
68298–62–4	2-Propenoic acid, 2-[butyl[(heptadecafluorooctyl)sulfonyl]amino]ethyl ester, telomer with 2-[butyl[(pentadecafluoroheptyl)sulfonyl]amino]ethyl 2-propenoate, methyloxirane polymer with oxirane di-2-propenoate, methyloxirane polymer with oxirane mono-2-propenoate and 1-octanethiol
68329–56–6	2-Propenoic acid, eicosyl ester, polymer with 2-[[(heptadecafluorooctyl)sulfonyl]methylamino]ethyl 2-propenoate, hexadecyl 2-propenoate, 2-[methyl[(nonafluorobutyl)sulfonyl]amino]ethyl 2-propenoate, 2-[methyl[(pentadecafluoroheptyl)sulfonyl]amino]ethyl 2-propenoate, 2-[methyl[(tridecafluorohexyl)sulfonyl]amino]ethyl 2-propenoate, 2-[methyl[(undecafluoropentyl)sulfonyl]amino]ethyl 2-propenoate and octadecyl 2-propenoate
68541–80–0	2-Propenoic acid, polymer with 2-[ethyl[(heptadecafluorooctyl)sulfonyl]amino]ethyl 2-methyl-2-propenoate and octadecyl 2-propenoate
68555–90–8	2-Propenoic acid, butyl ester, polymer with 2-[[(heptadecafluorooctyl)sulfonyl]methylamino]ethyl 2-propenoate, 2-[methyl[(nonafluorobutyl)sulfonyl]amino]ethyl 2-propenoate, 2-[methyl[(pentadecafluoroheptyl)sulfonyl]amino]ethyl 2-propenoate, 2-[methyl[(tridecafluorohexyl)sulfonyl]amino]ethyl 2-propenoate and 2-[methyl[(undecafluoropentyl)sulfonyl]amino]ethyl 2-propenoate
68555–91–9	2-Propenoic acid, 2-methyl-, 2-[ethyl[(heptadecafluorooctyl)sulfonyl]amino]ethyl ester, polymer with 2-[ethyl[(nonafluorobutyl)sulfonyl]amino] ethyl 2-methyl-2-propenoate, 2-[ethyl[(pentadecafluoroheptyl)sulfonyl]amino]ethyl 2-methyl-2-propenoate, 2-[ethyl[(tridecafluorohexyl)sulfonyl]amino]ethyl 2-methyl-2-propenoate, 2-[ethyl[(undecafluoropentyl)sulfonyl]amino]ethyl 2-methyl-2-propenoate and octadecyl 2-methyl-2-propenoate
68555–92–0	2-Propenoic acid, 2-methyl-, 2-[[(heptadecafluorooctyl)sulfonyl]methylamino]ethyl ester, polymer with 2-[methyl[(nonafluorobutyl)sulfonyl]amino]ethyl 2-methyl-2-propenoate, 2-[methyl[(pentadecafluoroheptyl)sulfonyl]amino]ethyl 2-methyl-2-propenoate, 2-[methyl[(tridecafluorohexyl)sulfonyl]amino]ethyl 2-methyl-2-propenoate, 2-[methyl[(undecafluoropentyl)sulfonyl]amino]ethyl 2-methyl-2-propenoate and octadecyl 2-methyl-2-propenoate
68586–14–1	2-Propenoic acid, 2-[[(heptadecafluorooctyl)sulfonyl]methylamino]ethyl ester, telomer with 2-[methyl[(nonafluorobutyl)sulfonyl]amino]ethyl 2-propenoate, .alpha.-(2-methyl-1-oxo-2-propenyl)-.omega.-hydroxypoly(oxy-1,2-ethanediyl), .alpha.-(2-methyl-1-oxo-2-propenyl)-.omega.-[(2-methyl-1-oxo-2-propenyl)oxy]poly(oxy-1,2-ethanediyl), 2-[methyl[(pentadecafluoroheptyl)sulfonyl]amino]ethyl 2-propenoate, 2-[methyl[(tridecafluorohexyl)sulfonyl]amino]ethyl 2-propenoate, 2-[methyl[(undecafluoropentyl)sulfonyl]amino]ethyl 2-propenoate and 1-octanethiol
68649–26–3	1-Octanesulfonamide, N-ethyl-1,1,2,2,3,3,4,4,5,5,6,6,7,7,8,8,8-heptadecafluoro-N-(2-hydroxyethyl)-, reaction products with N-ethyl-1,1,2,2,3,3,4,4,4-nonafluoro-N-(2-hydroxyethyl)-1-butanesulfonamide, N-ethyl-1,1,2,2,3,3,4,4,5,5,6,6,7,7,7-pentadecafluoro-N-(2-hydroxyethyl)-1-heptanesulfonamide, N-ethyl-1,1,2,2,3,3,4,4,5,5,6,6,6-tridecafluoro-N-(2-hydroxyethyl)-1-hexanesulfonamide, N-ethyl-1,1,2,2,3,3,4,4,5,5,5-undecafluoro-N-(2-hydroxyethyl)-1-pentanesulfonamide, polymethylenepolyphenylene isocyanate and stearyl alc.
68891–96–3	Chromium, diaquatetrachloro[.mu.-[N-ethyl-N-[(heptadecafluorooctyl)sulfonyl]glycinato-.kappa.O:.kappa.O']]-.mu.-hydroxybis(2-methyl-1-propanol)di-
68867–60–7	2-Propenoic acid, 2-[[(heptadecafluorooctyl)sulfonyl]methylamino]ethyl ester, polymer with 2-[methyl[(nonafluorobutyl)sulfonyl]amino]ethyl 2-propenoate, 2-[methyl[(pentadecafluoroheptyl)sulfonyl]amino]ethyl 2-propenoate, 2-[methyl[(tridecafluorohexyl)sulfonyl]amino]ethyl 2-propenoate, 2-[methyl[(undecafluoropentyl)sulfonyl]amino]ethyl 2-propenoate and .alpha.-(1-oxo-2-propenyl)-.omega.-methoxypoly (oxy-1,2-ethanediyl)

TABLE 2.—PFAS CHEMICALS SUBJECT TO REPORTING ON OR AFTER JANUARY 1, 2003—Continued

CAS No./PMN	CAS Ninth Collective Index Name
68867–62–9	2-Propenoic acid, 2-methyl-, 2-[ethyl[(heptadecafluorooctyl)sulfonyl]amino]ethyl ester, telomer with 2-[ethyl[(nonafluorobutyl)sulfonyl]amino]ethyl 2-methyl-2-propenoate, 2-[ethyl[(pentadecafluoroheptyl)sulfonyl]amino]ethyl 2-methyl-2-propenoate, 2-[ethyl[(tridecafluorohexyl)sulfonyl]amino]ethyl 2-methyl-2-propenoate, 2-[ethyl[(undecafluoropentyl)sulfonyl]amino]ethyl 2-methyl-2-propenoate, 1-octanethiol and .alpha.-(1-oxo-2-propenyl)-.omega.-methoxypoly(oxy-1,2-ethanediyl)
68909–15–9	2-Propenoic acid, eicosyl ester, polymers with branched octyl acrylate, 2-[[(heptadecafluorooctyl)sulfonyl]methylamino]ethyl acrylate, 2-[methyl[(nonafluorobutyl)sulfonyl]amino]ethyl acrylate, 2-[methyl[(pentadecafluoroheptyl)sulfonyl]amino]ethyl acrylate, 2-[methyl[(tridecafluorohexyl)sulfonyl]amino]ethyl acrylate, 2-[methyl[(undecafluoropentyl)sulfonyl]amino]ethyl acrylate, polyethylene glycol acrylate Me ether and stearyl acrylate
68958–61–2	Poly(oxy-1,2-ethanediyl), .alpha.-[2-[ethyl[(heptadecafluorooctyl)sulfonyl]amino]ethyl]-.omega.-methoxy-
70225–14–8	1-Octanesulfonic acid, 1,1,2,2,3,3,4,4,5,5,6,6,7,7,8,8,8-heptadecafluoro-, compd. with 2,2'-iminobis[ethanol] (1:1)
71487–20–2	2-Propenoic acid, 2-methyl-, methyl ester, polymer with ethenylbenzene, 2-[[(heptadecafluorooctyl)sulfonyl]methylamino]ethyl 2-propenoate, 2-[methyl[(nonafluorobutyl)sulfonyl]amino]ethyl 2-propenoate, 2-[methyl[(pentadecafluoroheptyl)sulfonyl]amino]ethyl 2-propenoate, 2-[methyl[(tridecafluorohexyl)sulfonyl]amino]ethyl 2-propenoate, 2-[methyl[(undecafluoropentyl)sulfonyl]amino]ethyl 2-propenoate and 2-propenoic acid
73772–32–4	1-Propanesulfonic acid, 3-[[3-(dimethylamino)propyl][(tridecafluorohexyl)sulfonyl]amino]-2-hydroxy-, monosodium salt
81190–38–7	1-Propanaminium, N-(2-hydroxyethyl)-3-[(2-hydroxy-3-sulfopropyl)[(tridecafluorohexyl)sulfonyl]amino]-N,N-dimethyl-, hydroxide, monosodium salt
91081–99–1	Sulfonamides, C4-8-alkane, perfluoro, N-(hydroxyethyl)-N-methyl, reaction products with epichlorohydrin, adipates (esters)
94133–90–1	1-Propanesulfonic acid, 3-[[3-(dimethylamino)propyl][(heptadecafluorooctyl)sulfonyl]amino]-2-hydroxy-, monosodium salt
98999–57–6	Sulfonamides, C7-8-alkane, perfluoro, N-methyl-N-[2-[(1-oxo-2-propenyl)oxy]ethyl], polymers with 2-ethoxyethyl acrylate, glycidyl methacrylate and N,N,N-trimethyl-2-[(2-methyl-1-oxo-2-propenyl)oxy]ethanaminium chloride
117806–54–9	1-Heptanesulfonic acid, 1,1,2,2,3,3,4,4,5,5,6,6,7,7,7-pentadecafluoro-, lithium salt
129813–71–4	Sulfonamides, C4-8-alkane, perfluoro, N-methyl-N-(oxiranylmethyl)
148240–80–6	Fatty acids, C18-unsatd., trimers, 2-[methyl[(tridecafluorohexyl)sulfonyl]amino]ethyl esters
148240–82–8	Fatty acids, C18-unsatd., trimers, 2-[methyl[(pentadecafluoroheptyl)sulfonyl]amino]ethyl esters
182700–90–9	1-Octanesulfonamide, 1,1,2,2,3,3,4,4,5,5,6,6,7,7,8,8,8-heptadecafluoro-N-methyl-, reaction products with benzene-chlorine-sulfur chloride (S2Cl2) reaction products chlorides
L–92–0151	2-Propenoic acid, 2-methyl-, butyl ester, polymer with 2-[ethyl[(heptadecafluorooctyl)sulfonyl]amino]ethyl 2-methyl-2-propenoate, 2-[ethyl[(nonafluorobutyl)sulfonyl]amino]ethyl 2-methyl-2-propenoate, 2-[ethyl[(pentadecafluoroheptyl)sulfonyl]amino]ethyl 2-methyl-2-propenoate, 2-[ethyl[(tridecafluorohexyl)sulfonyl]amino]ethyl 2-methyl-2-propenoate and 2-propenoic acid
P–80–0183 192662–29–6	Sulfonamides, C4-8-alkane, perfluoro, N-[3-(dimethylamino)propyl], reaction products with acrylic acid
P–83–1102 306973–46–6	Fatty acids, linseed-oil, dimers, 2-[[(heptadecafluorooctyl)sulfonyl]methylamino]ethyl esters
P–84–1163 306975–56–4	Propanoic acid, 3-hydroxy-2-(hydroxymethyl)-2-methyl-, polymer with 2-ethyl-2-(hydroxymethyl)-1,3-propanediol and N,N',2-tris(6-isocyanatohexyl)imidodicarbonic diamide, reaction products with N-ethyl-1,1,2,2,3,3,4,4,5,5,6,6,7,7,8,8,8-heptadecafluoro-N-(2-hydroxyethyl)-1-octanesulfonamide and N-ethyl-1,1,2,2,3,3,4,4,5,5,6,6,7,7,7-pentadecafluoro-N-(2-hydroxyethyl)-1-heptanesulfonamide, compds. with triethylamine

TABLE 2.—PFAS CHEMICALS SUBJECT TO REPORTING ON OR AFTER JANUARY 1, 2003—Continued

CAS No./PMN	CAS Ninth Collective Index Name
P–84–1171 306975–57–5	Propanoic acid, 3-hydroxy-2-(hydroxymethyl)-2-methyl-, polymer with 1,1'-methylenebis[4-isocyanatobenzene] and 1,2,3-propanetriol, reaction products with N-ethyl-1,1,2,2,3,3,4,4,5,5,6,6,7,7,8,8,8-heptadecafluoro-N-(2-hydroxyethyl)-1-octanesulfonamide and N-ethyl-1,1,2,2,3,3,4,4,5,5,6,6,7,7,7-pentadecafluoro-N-(2-hydroxyethyl)-1-heptanesulfonamide, compds. with morpholine
P–86–0301 306973–47–7	Sulfonamides, C4-8-alkane, perfluoro, N-(hydroxyethyl)-N-methyl, reaction products with 12-hydroxystearic acid and 2,4-TDI, ammonium salts
P–86–0958 306975–62–2	2-Propenoic acid, 2-methyl-, dodecyl ester, polymers with 2-[methyl[(perfluoro-C4-8-alkyl)sulfonyl]amino]ethyl acrylate and vinylidene chloride
P–89–0799 160901–25–7	Sulfonamides, C4-8-alkane, perfluoro, N-ethyl-N-(hydroxyethyl), reaction products with 2-ethyl-1-hexanol and polymethylenepolyphenylene isocyanate
P–90–0111 306974–19–6	Sulfonamides, C4-8-alkane, perfluoro, N-methyl-N-[(3-octadecyl-2-oxo-5-oxazolidinyl)methyl]
P–91–1419 306975–84–8	Poly(oxy-1,2-ethanediyl), .alpha.-hydro-.omega.-hydroxy-, polymer with 1,6-diisocyanatohexane, N-(2-hydroxyethyl)-N-methyl perfluoro C4-8-alkane sulfonamides-blocked
P–93–1444 306975–85–9	2-Propenoic acid, 2-methyl-, dodecyl ester, polymers with N-(hydroxymethyl)-2-propenamide, 2-[methyl[(perfluoro-C4-8-alkyl)sulfonyl]amino]ethyl methacrylate, stearyl methacrylate and vinylidene chloride
P–94–0545 306976–25–0	1-Hexadecanaminium, N,N-dimethyl-N-[2-[(2-methyl-1-oxo-2-propenyl)oxy]ethyl]-, bromide, polymers with Bu acrylate, Bu methacrylate and 2-[methyl[(perfluoro-C4-8-alkyl)sulfonyl]amino]ethyl acrylate
P–94–0927 306976–55–6	2-Propenoic acid, 2-methyl-, 2-methylpropyl ester, polymer with 2,4-diisocyanato-1-methylbenzene, 2-ethyl-2-(hydroxymethyl)-1,3-propanediol and 2-propenoic acid, N-ethyl-N-(hydroxyethyl)perfluoro-C4-8-alkanesulfonamides-blocked
P–94–2206 306974–28–7	Siloxanes and Silicones, di-Me, mono[3-[(2-methyl-1-oxo-2-propenyl)oxy]propylgroup]-terminated, polymers with 2-[methyl[(perfluoro-C4-8-alkyl)sulfonyl]amino]ethyl acrylate and stearyl methacrylate
P–95–0120 306980–27–8	Sulfonamides, C4-8-alkane, perfluoro, N,N'-[1,6-hexanediylbis[(2-oxo-3,5-oxazolidinediyl)methylene]]bis[N-methyl-
P–96–1262 306974–45–8	Sulfonic acids, C6-8-alkane, perfluoro, compds. with polyethylene-polypropylene glycol bis(2-aminopropyl) ether
P–96–1424 306977–10–6	2-Propenoic acid, 2-methyl-, 2-(dimethylamino)ethyl ester, telomer with 2-[ethyl[(perfluoro-C4-8-alkyl)sulfonyl]amino]ethyl methacrylate and 1-octanethiol, N-oxides
P–96–1433 179005–06–2	Sulfonamides, C4-8-alkane, perfluoro, N-[3-(dimethyloxidoamino)propyl], potassium salts
P–97–0790 251099–16–8	1-Decanaminium, N-decyl-N,N-dimethyl-, salt with 1,1,2,2,3,3,4,4,5,5,6,6,7,7,8,8,8-heptadecafluoro-1-octanesulfonic acid (1:1)
P–98–0251 306978–04–1	2-Propenoic acid, butyl ester, polymers with acrylamide, 2-[methyl[(perfluoro-C4-8-alkyl)sulfonyl]amino]ethyl acrylate and vinylidene chloride
P–98–1272 306977–58–2	2-Propenoic acid, 2-methyl-, 3-(trimethoxysilyl)propyl ester, polymers with acrylic acid, 2-[methyl[(perfluoro-C4-8-alkyl)sulfonyl]amino]ethyl acrylate and propylene glycol monoacrylate, hydrolyzed, compds. with 2,2'-(methylimino)bis[ethanol]
P–99–0188 306978–65–4	Hexane, 1,6-diisocyanato-, homopolymer, N-(hydroxyethyl)-N-methyl perfluoro-C4-8-alkane sulfonamides- and stearyl alc.-blocked
P–99–0319 306979–40–8	Poly(oxy-1,2-ethanediyl), .alpha.-[2-(methylamino)ethyl]-.omega.-[(1,1,3,3-tetramethylbutyl)phenoxy]-, N-[(perfluoro-C4-8-alkyl)sulfonyl] derivs.

(2) The significant new uses are: (i) Any manufacture or import for any use of any chemical listed in Table 1 of paragraph (a)(1) of this section on or after January 1, 2001.

(ii) Any manufacture or import for any use of any chemical listed in Table 2 of paragraph (a)(1) of this section on or after January 1, 2003, except as noted in paragraph (a)(3) of this section.

(3) Manufacture or import of any chemical listed in Table 2 of paragraph (a)(1) of this section for the following specific uses shall not be considered as a significant new use subject to reporting under this section:

(i) Use as an anti-erosion additive in fire-resistant phosphate ester aviation hydraulic fluids.

(ii) Use as a component of a photoresist substance, including a photo

acid generator or surfactant, or as a component of an anti-reflective coating, used in a photomicrolithography process to produce semiconductors or similar components of electronic or other miniaturized devices.

(iii) Use as an intermediate only to produce other chemical substances to be used solely for the uses listed in paragraph (a)(3)(i) or (ii) of this section.

(iv) Use in a surface tension and static discharge control coating on films, papers, and printing plates, or as a surfactant or defoamer in solutions used to process films and papers, in traditional and laser medical imaging and in industrial and consumer film products.

(b) [Reserved]

[FR Doc. 02–5747 Filed 3–8–02; 8:45 am]

BILLING CODE 6560–50–S

ENVIRONMENTAL PROTECTION AGENCY

40 CFR Part 721

[OPPTS–50639C; FRL–6823–7]

RIN 2070–AD43

Perfluoroalkyl Sulfonates; Proposed Significant New Use Rule

AGENCY: Environmental Protection Agency (EPA).

ACTION: Supplemental proposed rule.

SUMMARY: EPA is proposing a supplemental significant new use rule (SNUR) under section 5(a)(2) of the Toxic Substances Control Act (TSCA) for the following 75 substances: Perfluorooctanesulfonic acid (PFOSH) and certain of its salts (PFOSS), perfluorooctanesulfonyl fluoride (POSF), certain higher and lower homologues of PFOSH and POSF, and certain other chemical substances, including polymers, that are derived from PFOSH and its homologues. These chemicals are collectively referred to as perfluoroalkyl sulfonates, or PFAS. This proposed rule would require manufacturers and importers to notify EPA at least 90 days before commencing the manufacture or import of these chemical substances for the significant new uses described in this document. This supplemental action takes into account comments received on an earlier proposed SNUR published in the **Federal Register** of October 18, 2000, amends the description and the list of chemicals to which this proposed SNUR would apply, and clarifies the definitions of significant new uses. EPA believes that this action is necessary because the PFAS component of these chemical substances may be hazardous to human health and the environment. The required notice will provide EPA with the opportunity to evaluate an intended new use and associated activities and, if necessary, to prohibit or limit that activity before it occurs. Published elsewhere in today's issue of the **Federal Register** is a final rule which addresses the remainder of the chemicals listed in the original proposed SNUR.

DATES: Comments, identified by docket control number OPPTS–50639C, must be received on or before April 10, 2002.

ADDRESSES: Comments may be submitted by mail, electronically, or in person. Please follow the detailed instructions for each method as provided in Unit I. of the **SUPPLEMENTARY INFORMATION**. To ensure proper receipt by EPA, it is imperative that you identify docket control number OPPTS–50639C in the subject line on the first page of your response.

FOR FURTHER INFORMATION CONTACT: *For general information contact*: Barbara Cunningham, Acting Director, Environmental Assistance Division (74080), Office of Pollution Prevention and Toxics, Environmental Protection Agency, 1200 Pennsylvania Ave., NW., Washington, DC 20460; telephone number: (202) 554–1404; e-mail address: TSCA-Hotline@epa.gov.

For technical information contact: Mary F. Dominiak, Chemical Control Division (7405M), Environmental Protection Agency, 1200 Pennsylvania Ave., NW., Washington, DC 20460; telephone number: (202) 564–8104; e-mail address: dominiak.mary@epa.gov.

SUPPLEMENTARY INFORMATION:

I. General Information

A. Does this Action Apply to Me?

You may be potentially affected by this action if you manufacture (defined by statute to include import) any of the chemical substances that are listed in Table 2 of this unit. Persons who intend to import any chemical substance governed by a final SNUR are subject to the TSCA section 13 (15 U.S.C. 2612) import certification requirements, and to the regulations codified at 19 CFR 12.118 through 12.127 and 12.728. Those persons must certify that they are in compliance with the SNUR requirements. The EPA policy in support of import certification appears at 40 CFR part 707, subpart B. In addition, any persons who export or intend to export any of the chemical substances listed in Table 2 of this unit are subject to the export notification provisions of TSCA section 12(b) (15 U.S.C. 2611(b)), and must comply with the export notification requirements in 40 CFR 721.20 and 40 CFR part 707, subpart D. Potentially affected categories and entities may include, but are not limited to:

TABLE 1.—POTENTIALLY AFFECTED ENTITIES

Categories	NAICS codes	Examples of potentially affected entities
Chemical Manufacturers or Importers	325	Persons who manufacture (defined by statute to include import) one or more of the subject chemical substances
Chemical Exporters	325	Persons who export, or intend to export, one or more of the subject chemical substances

This listing is not intended to be exhaustive, but rather provides a guide for readers regarding entities likely to be affected by this action. Other types of entities not listed in Table 1 of this unit could also be affected. The North American Industrial Classification System (NAICS) codes have been provided to assist you and others in determining whether or not this action applies to certain entities. To determine whether you or your business is affected by this action, you should carefully examine the applicability provisions in 40 CFR 721.5 for SNUR-related obligations. Also, consult Unit III. If you have any questions regarding the applicability of this action to a particular entity, consult the technical person listed under **FOR FURTHER INFORMATION CONTACT**.

Some chemicals in Table 2 of this unit are identified by both premanufacture notice (PMN) and Chemical Abstract Service numbers (CAS No.). In the original proposed SNUR, only the PMN appeared with those chemicals.

TABLE 2.—CHEMICAL SUBSTANCES COVERED BY THIS PROPOSED RULE

CAS No./PMN	CAS Ninth Collective Index Name
307–35–7	1-Octanesulfonyl fluoride, 1,1,2,2,3,3,4,4,5,5,6,6,7,7,8,8,8-heptadecafluoro-

TABLE 2.—CHEMICAL SUBSTANCES COVERED BY THIS PROPOSED RULE—Continued

CAS No./PMN	CAS Ninth Collective Index Name
307–51–7	1-Decanesulfonyl fluoride, 1,1,2,2,3,3,4,4,5,5,6,6,7,7,8,8,9,9,10,10,10-heneicosafluoro-
376–14–7	2-Propenoic acid, 2-methyl-, 2-[ethyl[(heptadecafluorooctyl)sulfonyl]amino]ethyl ester
383–07–3	2-Propenoic acid, 2-[butyl[(heptadecafluorooctyl)sulfonyl]amino]ethyl ester
423–50–7	1-Hexanesulfonyl fluoride, 1,1,2,2,3,3,4,4,5,5,6,6,6-tridecafluoro-
423–82–5	2-Propenoic acid, 2-[ethyl[(heptadecafluorooctyl)sulfonyl]amino]ethyl ester
754–91–6	1-Octanesulfonamide, 1,1,2,2,3,3,4,4,5,5,6,6,7,7,8,8,8-heptadecafluoro-
1652–63–7	1-Propanaminium, 3-[[(heptadecafluorooctyl)sulfonyl]amino]-N,N,N-trimethyl-, iodide
1691–99–2	1-Octanesulfonamide, N-ethyl-1,1,2,2,3,3,4,4,5,5,6,6,7,7,8,8,8-heptadecafluoro-N-(2-hydroxyethyl)-
1763–23–1	1-Octanesulfonic acid, 1,1,2,2,3,3,4,4,5,5,6,6,7,7,8,8,8-heptadecafluoro-
2795–39–3	1-Octanesulfonic acid, 1,1,2,2,3,3,4,4,5,5,6,6,7,7,8,8,8-heptadecafluoro-, potassium salt
2991–51–7	Glycine, N-ethyl-N-[(heptadecafluorooctyl)sulfonyl]-, potassium salt
4151–50–2	1-Octanesulfonamide, N-ethyl-1,1,2,2,3,3,4,4,5,5,6,6,7,7,8,8,8-heptadecafluoro-
14650–24–9	2-Propenoic acid, 2-methyl-, 2-[[(heptadecafluorooctyl)sulfonyl]methylamino]ethyl ester
17202–41–4	1-Nonanesulfonic acid, 1,1,2,2,3,3,4,4,5,5,6,6,7,7,8,8,9,9,9-nonadecafluoro-, ammonium salt
24448–09–7	1-Octanesulfonamide, 1,1,2,2,3,3,4,4,5,5,6,6,7,7,8,8,8-heptadecafluoro-N-(2-hydroxyethyl)-N-methyl-
25268–77–3	2-Propenoic acid, 2-[[(heptadecafluorooctyl)sulfonyl]methylamino]ethyl ester
29081–56–9	1-Octanesulfonic acid, 1,1,2,2,3,3,4,4,5,5,6,6,7,7,8,8,8-heptadecafluoro-, ammonium salt
29117–08–6	Poly(oxy-1,2-ethanediyl), .alpha.-[2-[ethyl[(heptadecafluorooctyl)sulfonyl]amino]ethyl]-.omega.-hydroxy-
29457–72–5	1-Octanesulfonic acid, 1,1,2,2,3,3,4,4,5,5,6,6,7,7,8,8,8-heptadecafluoro-, lithium salt
31506–32–8	1-Octanesulfonamide, 1,1,2,2,3,3,4,4,5,5,6,6,7,7,8,8,8-heptadecafluoro-N-methyl-
38006–74–5	1-Propanaminium, 3-[[(heptadecafluorooctyl)sulfonyl]amino]-N,N,N-trimethyl-, chloride
38850–58–7	1-Propanaminium, N-(2-hydroxyethyl)-N,N-dimethyl-3-[(3-sulfopropyl)[(tridecafluorohexyl)sulfonyl]amino]-, inner salt
55120–77–9	1-Hexanesulfonic acid, 1,1,2,2,3,3,4,4,5,5,6,6,6-tridecafluoro-, lithium salt
67584–42–3	Cyclohexanesulfonic acid, decafluoro(pentafluoroethyl)-, potassium salt
67906–42–7	1-Decanesulfonic acid, 1,1,2,2,3,3,4,4,5,5,6,6,7,7,8,8,9,9,10,10,10-heneicosafluoro-, ammonium salt
68156–01–4	Cyclohexanesulfonic acid, nonafluorobis(trifluoromethyl)-, potassium salt
68298–62–4	2-Propenoic acid, 2-[butyl[(heptadecafluorooctyl)sulfonyl]amino]ethyl ester, telomer with 2-[butyl[(pentadecafluoroheptyl)sulfonyl]amino]ethyl 2-propenoate, methyloxirane polymer with oxirane di-2-propenoate, methyloxirane polymer with oxirane mono-2-propenoate and 1-octanethiol
68329–56–6	2-Propenoic acid, eicosyl ester, polymer with 2-[[(heptadecafluorooctyl)sulfonyl]methylamino]ethyl 2-propenoate, hexadecyl 2-propenoate, 2-[methyl[(nonafluorobutyl)sulfonyl]amino]ethyl 2-propenoate, 2-[methyl[(pentadecafluoroheptyl)sulfonyl]amino]ethyl 2-propenoate, 2-[methyl[(tridecafluorohexyl)sulfonyl]amino]ethyl 2-propenoate, 2-[methyl[(undecafluoropentyl)sulfonyl]amino]ethyl 2-propenoate and octadecyl 2-propenoate
68541–80–0	2-Propenoic acid, polymer with 2-[ethyl[(heptadecafluorooctyl)sulfonyl]amino]ethyl 2-methyl-2-propenoate and octadecyl 2-propenoate
68555–90–8	2-Propenoic acid, butyl ester, polymer with 2-[[(heptadecafluorooctyl)sulfonyl]methylamino]ethyl 2-propenoate, 2-[methyl[(nonafluorobutyl)sulfonyl]amino]ethyl 2-propenoate, 2-[methyl[(pentadecafluoroheptyl)sulfonyl]amino]ethyl 2-propenoate, 2-[methyl[(tridecafluorohexyl)sulfonyl]amino]ethyl 2-propenoate and 2-[methyl[(undecafluoropentyl)sulfonyl]amino]ethyl 2-propenoate

TABLE 2.—CHEMICAL SUBSTANCES COVERED BY THIS PROPOSED RULE—Continued

CAS No./PMN	CAS Ninth Collective Index Name
68555–91–9	2-Propenoic acid, 2-methyl-, 2-[ethyl[(heptadecafluorooctyl)sulfonyl]amino]ethyl ester, polymer with 2-[ethyl[(nonafluorobutyl)sulfonyl]amino] ethyl 2-methyl-2-propenoate, 2-[ethyl[(pentadecafluoroheptyl)sulfonyl]amino]ethyl 2-methyl-2-propenoate, 2-[ethyl[(tridecafluorohexyl)sulfonyl]amino]ethyl 2-methyl-2-propenoate, 2-[ethyl[(undecafluoropentyl)sulfonyl]amino]ethyl 2-methyl-2-propenoate and octadecyl 2-methyl-2-propenoate
68555–92–0	2-Propenoic acid, 2-methyl-, 2-[[(heptadecafluorooctyl)sulfonyl]methylamino]ethyl ester, polymer with 2-[methyl[(nonafluorobutyl)sulfonyl]amino]ethyl 2-methyl-2-propenoate, 2-[methyl[(pentadecafluoroheptyl)sulfonyl]amino]ethyl 2-methyl-2-propenoate, 2-[methyl[(tridecafluorohexyl)sulfonyl]amino]ethyl 2-methyl-2-propenoate, 2-[methyl[(undecafluoropentyl)sulfonyl]amino]ethyl 2-methyl-2-propenoate and octadecyl 2-methyl-2-propenoate
68586–14–1	2-Propenoic acid, 2-[[(heptadecafluorooctyl)sulfonyl]methylamino]ethyl ester, telomer with 2-[methyl[(nonafluorobutyl)sulfonyl]amino]ethyl 2-propenoate, .alpha.-(2-methyl-1-oxo-2-propenyl)-.omega.-hydroxypoly(oxy-1,2-ethanediyl), .alpha.-(2-methyl-1-oxo-2-propenyl)-.omega.-[(2-methyl-1-oxo-2-propenyl)oxy]poly(oxy-1,2-ethanediyl), 2-[methyl[(pentadecafluoroheptyl)sulfonyl]amino]ethyl 2-propenoate, 2-[methyl[(tridecafluorohexyl)sulfonyl]amino]ethyl 2-propenoate, 2-[methyl[(undecafluoropentyl)sulfonyl]amino]ethyl 2-propenoate and 1-octanethiol
68649–26–3	1-Octanesulfonamide, N-ethyl-1,1,2,2,3,3,4,4,5,5,6,6,7,7,8,8,8-heptadecafluoro-N-(2-hydroxyethyl)-, reaction products with N-ethyl-1,1,2,2,3,3,4,4,4-nonafluoro-N-(2-hydroxyethyl)-1-butanesulfonamide, N-ethyl-1,1,2,2,3,3,4,4,5,5,6,6,7,7,7-pentadecafluoro-N-(2-hydroxyethyl)-1-heptanesulfonamide, N-ethyl-1,1,2,2,3,3,4,4,5,5,6,6,6-tridecafluoro-N-(2-hydroxyethyl)-1-hexanesulfonamide, N-ethyl-1,1,2,2,3,3,4,4,5,5,5-undecafluoro-N-(2-hydroxyethyl)-1-pentanesulfonamide, polymethylenepolyphenylene isocyanate and stearyl alc.
68891–96–3	Chromium, diaquatetrachloro[.mu.-[N-ethyl-N-[(heptadecafluorooctyl)sulfonyl]glycinato-.kappa.O:.kappa.O']]-.mu.-hydroxybis(2-methyl-1-propanol)di-
68867–60–7	2-Propenoic acid, 2-[[(heptadecafluorooctyl)sulfonyl]methylamino]ethyl ester, polymer with 2-[methyl[(nonafluorobutyl)sulfonyl]amino]ethyl 2-propenoate, 2-[methyl[(pentadecafluoroheptyl)sulfonyl]amino]ethyl 2-propenoate, 2-[methyl[(tridecafluorohexyl)sulfonyl]amino]ethyl 2-propenoate, 2-[methyl[(undecafluoropentyl)sulfonyl]amino]ethyl 2-propenoate and .alpha.-(1-oxo-2-propenyl)-.omega.-methoxypoly (oxy-1,2-ethanediyl)
68867–62–9	2-Propenoic acid, 2-methyl-, 2-[ethyl[(heptadecafluorooctyl)sulfonyl]amino]ethyl ester, telomer with 2-[ethyl[(nonafluorobutyl)sulfonyl]amino]ethyl 2-methyl-2-propenoate, 2-[ethyl[(pentadecafluoroheptyl)sulfonyl]amino]ethyl 2-methyl-2-propenoate, 2-[ethyl[(tridecafluorohexyl)sulfonyl]amino]ethyl 2-methyl-2-propenoate, 2-[ethyl[(undecafluoropentyl)sulfonyl]amino]ethyl 2-methyl-2-propenoate, 1-octanethiol and .alpha.-(1-oxo-2-propenyl)-.omega.-methoxypoly(oxy-1,2-ethanediyl)
68909–15–9	2-Propenoic acid, eicosyl ester, polymers with branched octyl acrylate, 2-[[(heptadecafluorooctyl)sulfonyl]methylamino]ethyl acrylate, 2-[methyl[(nonafluorobutyl)sulfonyl]amino]ethyl acrylate, 2-[methyl[(pentadecafluoroheptyl)sulfonyl]amino]ethyl acrylate, 2-[methyl[(tridecafluorohexyl)sulfonyl]amino]ethyl acrylate, 2-[methyl[(undecafluoropentyl)sulfonyl]amino]ethyl acrylate, polyethylene glycol acrylate Me ether and stearyl acrylate
68958–61–2	Poly(oxy-1,2-ethanediyl), .alpha.-[2-[ethyl[(heptadecafluorooctyl)sulfonyl]amino]ethyl]-.omega.-methoxy-
70225–14–8	1-Octanesulfonic acid, 1,1,2,2,3,3,4,4,5,5,6,6,7,7,8,8,8-heptadecafluoro-, compd. with 2,2'-iminobis[ethanol] (1:1)
71487–20–2	2-Propenoic acid, 2-methyl-, methyl ester, polymer with ethenylbenzene, 2-[[(heptadecafluorooctyl)sulfonyl]methylamino]ethyl 2-propenoate, 2-[methyl[(nonafluorobutyl)sulfonyl]amino]ethyl 2-propenoate, 2-[methyl[(pentadecafluoroheptyl)sulfonyl]amino]ethyl 2-propenoate, 2-[methyl[(tridecafluorohexyl)sulfonyl]amino]ethyl 2-propenoate, 2-[methyl[(undecafluoropentyl)sulfonyl]amino]ethyl 2-propenoate and 2-propenoic acid
73772–32–4	1-Propanesulfonic acid, 3-[[3-(dimethylamino)propyl][(tridecafluorohexyl)sulfonyl]amino]-2-hydroxy-, monosodium salt
81190–38–7	1-Propanaminium, N-(2-hydroxyethyl)-3-[(2-hydroxy-3-sulfopropyl)[(tridecafluorohexyl)sulfonyl]amino]-N,N-dimethyl-, hydroxide, monosodium salt

TABLE 2.—CHEMICAL SUBSTANCES COVERED BY THIS PROPOSED RULE—Continued

CAS No./PMN	CAS Ninth Collective Index Name
91081–99–1	Sulfonamides, C4-8-alkane, perfluoro, N-(hydroxyethyl)-N-methyl, reaction products with epichlorohydrin, adipates (esters)
94133–90–1	1-Propanesulfonic acid, 3-[[3-(dimethylamino)propyl][(heptadecafluorooctyl)sulfonyl]amino]-2-hydroxy-, monosodium salt
98999–57–6	Sulfonamides, C7-8-alkane, perfluoro, N-methyl-N-[2-[(1-oxo-2-propenyl)oxy]ethyl], polymers with 2-ethoxyethyl acrylate, glycidyl methacrylate and N,N,N-trimethyl-2-[(2-methyl-1-oxo-2-propenyl)oxy]ethanaminium chloride
117806–54–9	1-Heptanesulfonic acid, 1,1,2,2,3,3,4,4,5,5,6,6,7,7,7-pentadecafluoro-, lithium salt
129813–71–4	Sulfonamides, C4-8-alkane, perfluoro, N-methyl-N-(oxiranylmethyl)
148240–80–6	Fatty acids, C18-unsatd., trimers, 2-[methyl[(tridecafluorohexyl)sulfonyl]amino]ethyl esters
148240–82–8	Fatty acids, C18-unsatd., trimers, 2-[methyl[(pentadecafluoroheptyl)sulfonyl]amino]ethyl esters
182700–90–9	1-Octanesulfonamide, 1,1,2,2,3,3,4,4,5,5,6,6,7,7,8,8,8-heptadecafluoro-N-methyl-, reaction products with benzene-chlorine-sulfur chloride (S2Cl2) reaction products chlorides
L–92–0151	2-Propenoic acid, 2-methyl-, butyl ester, polymer with 2-[ethyl[(heptadecafluorooctyl)sulfonyl]amino]ethyl 2-methyl-2-propenoate, 2-[ethyl[(nonafluorobutyl)sulfonyl]amino]ethyl 2-methyl-2-propenoate, 2-[ethyl[(pentadecafluoroheptyl)sulfonyl]amino]ethyl 2-methyl-2-propenoate, 2-[ethyl[(tridecafluorohexyl)sulfonyl]amino]ethyl 2-methyl-2-propenoate and 2-propenoic acid
P–80–0183 192662–29–6	Sulfonamides, C4-8-alkane, perfluoro, N-[3-(dimethylamino)propyl], reaction products with acrylic acid
P–83–1102 306973–46–6	Fatty acids, linseed-oil, dimers, 2-[[(heptadecafluorooctyl)sulfonyl]methylamino]ethyl esters
P–84–1163 306975–56–4	Propanoic acid, 3-hydroxy-2-(hydroxymethyl)-2-methyl-, polymer with 2-ethyl-2-(hydroxymethyl)-1,3-propanediol and N,N',2-tris(6-isocyanatohexyl)imidodicarbonic diamide, reaction products with N-ethyl-1,1,2,2,3,3,4,4,5,5,6,6,7,7,8,8,8-heptadecafluoro-N-(2-hydroxyethyl)-1-octanesulfonamide and N-ethyl-1,1,2,2,3,3,4,4,5,5,6,6,7,7,7-pentadecafluoro-N-(2-hydroxyethyl)-1-heptanesulfonamide, compds. with triethylamine
P–84–1171 306975–57–5	Propanoic acid, 3-hydroxy-2-(hydroxymethyl)-2-methyl-, polymer with 1,1'-methylenebis[4-isocyanatobenzene] and 1,2,3-propanetriol, reaction products with N-ethyl-1,1,2,2,3,3,4,4,5,5,6,6,7,7,8,8,8-heptadecafluoro-N-(2-hydroxyethyl)-1-octanesulfonamide and N-ethyl-1,1,2,2,3,3,4,4,5,5,6,6,7,7,7-pentadecafluoro-N-(2-hydroxyethyl)-1-heptanesulfonamide, compds. with morpholine
P–86–0301 306973–47–7	Sulfonamides, C4-8-alkane, perfluoro, N-(hydroxyethyl)-N-methyl, reaction products with 12-hydroxystearic acid and 2,4-TDI, ammonium salts
P–86–0958 306975–62–2	2-Propenoic acid, 2-methyl-, dodecyl ester, polymers with 2-[methyl[(perfluoro-C4-8-alkyl)sulfonyl]amino]ethyl acrylate and vinylidene chloride
P–89–0799 160901–25–7	Sulfonamides, C4-8-alkane, perfluoro, N-ethyl-N-(hydroxyethyl), reaction products with 2-ethyl-1-hexanol and polymethylenepolyphenylene isocyanate
P–90–0111 306974–19–6	Sulfonamides, C4-8-alkane, perfluoro, N-methyl-N-[(3-octadecyl-2-oxo-5-oxazolidinyl)methyl]
P–91–1419 306975–84–8	Poly(oxy-1,2-ethanediyl), .alpha.-hydro-.omega.-hydroxy-, polymer with 1,6-diisocyanatohexane, N-(2-hydroxyethyl)-N-methyl perfluoro C4-8-alkane sulfonamides-blocked
P–93–1444 306975–85–9	2-Propenoic acid, 2-methyl-, dodecyl ester, polymers with N-(hydroxymethyl)-2-propenamide, 2-[methyl[(perfluoro-C4-8-alkyl)sulfonyl]amino]ethyl methacrylate, stearyl methacrylate and vinylidene chloride
P–94–0545 306976–25–0	1-Hexadecanaminium, N,N-dimethyl-N-[2-[(2-methyl-1-oxo-2-propenyl)oxy]ethyl]-, bromide, polymers with Bu acrylate, Bu methacrylate and 2-[methyl[(perfluoro-C4-8-alkyl)sulfonyl]amino]ethyl acrylate
P–94–0927 306976–55–6	2-Propenoic acid, 2-methyl-, 2-methylpropyl ester, polymer with 2,4-diisocyanato-1-methylbenzene, 2-ethyl-2-(hydroxymethyl)-1,3-propanediol and 2-propenoic acid, N-ethyl-N-(hydroxyethyl)perfluoro-C4-8-alkanesulfonamides-blocked
P–94–2206 306974–28–7	Siloxanes and Silicones, di-Me, mono[3-[(2-methyl-1-oxo-2-propenyl)oxy]propylgroup]-terminated, polymers with 2-[methyl[(perfluoro-C4-8-alkyl)sulfonyl]amino]ethyl acrylate and stearyl methacrylate

TABLE 2.—CHEMICAL SUBSTANCES COVERED BY THIS PROPOSED RULE—Continued

CAS No./PMN	CAS Ninth Collective Index Name
P–95–0120 306980–27–8	Sulfonamides, C4-8-alkane, perfluoro, N,N'-[1,6-hexanediylbis[(2-oxo-3,5-oxazolidinediyl)methylene]]bis[N-methyl-
P–96–1262 306974–45–8	Sulfonic acids, C6-8-alkane, perfluoro, compds. with polyethylene-polypropylene glycol bis(2-aminopropyl) ether
P–96–1424 306977–10–6	2-Propenoic acid, 2-methyl-, 2-(dimethylamino)ethyl ester, telomer with 2-[ethyl[(perfluoro-C4-8-alkyl)sulfonyl]amino]ethyl methacrylate and 1-octanethiol, N-oxides
P–96–1433 179005–06–2	Sulfonamides, C4-8-alkane, perfluoro, N-[3-(dimethyloxidoamino)propyl], potassium salts
P–97–0790 251099–16–8	1-Decanaminium, N-decyl-N,N-dimethyl-, salt with 1,1,2,2,3,3,4,4,5,5,6,6,7,7,8,8,8-heptadecafluoro-1-octanesulfonic acid (1:1)
P–98–0251 306978–04–1	2-Propenoic acid, butyl ester, polymers with acrylamide, 2-[methyl[(perfluoro-C4-8-alkyl)sulfonyl]amino]ethyl acrylate and vinylidene chloride
P–98–1272 306977–58–2	2-Propenoic acid, 2-methyl-, 3-(trimethoxysilyl)propyl ester, polymers with acrylic acid, 2-[methyl[(perfluoro-C4-8-alkyl)sulfonyl]amino]ethyl acrylate and propylene glycol monoacrylate, hydrolyzed, compds. with 2,2'-(methylimino)bis[ethanol]
P–99–0188 306978–65–4	Hexane, 1,6-diisocyanato-, homopolymer, N-(hydroxyethyl)-N-methyl perfluoro-C4-8-alkane sulfonamides- and stearyl alc.-blocked
P–99–0319 306979–40–8	Poly(oxy-1,2-ethanediyl), .alpha.-[2-(methylamino)ethyl]-.omega.-[(1,1,3,3-tetramethylbutyl)phenoxy]-, N-[(perfluoro-C4-8-alkyl)sulfonyl] derivs.

B. How Can I Get Additional Information, Including Copies of this Document or Other Related Documents?

1. *Electronically*. You may obtain electronic copies of this document, and certain other related documents that might be available electronically, from the EPA Internet Home Page at *http://www.epa.gov/*. To access this document, on the Home Page select ''Laws and Regulations,'' ''Regulations and Proposed Rules,'' and then look up the entry for this document under the ''**Federal Register**—Environmental Documents.'' You can also go directly to the **Federal Register** listings at *http://www.epa.gov/fedrgstr/*.

2. *In person*. The Agency has established an official record for this action under docket control number OPPTS–50639C. The official record consists of the documents specifically referenced in this action, any public comments received during an applicable comment period, and other information related to this action, including any information claimed as Confidential Business Information (CBI). This official record includes the documents that are physically located in the docket, as well as the documents that are referenced in those documents. The public version of the official record does not include any information claimed as CBI. The public version of the official record, which includes printed, paper versions of any electronic comments submitted during an applicable comment period, is available for inspection in the TSCA Nonconfidential Information Center, North East Mall Rm. B–607, Waterside Mall, 401 M St., SW., Washington, DC. The Center is open from noon to 4 p.m., Monday through Friday, excluding legal holidays. The telephone number for the Center is (202) 260–7099.

C. How and to Whom Do I Submit Comments?

You may submit comments through the mail, in person, or electronically. To ensure proper receipt by EPA, it is imperative that you identify docket control number OPPTS–50639C in the subject line on the first page of your response.

1. *By mail*. Submit your comments to: Document Control Office (7407M), Office of Pollution Prevention and Toxics (OPPT), Environmental Protection Agency, 1200 Pennsylvania Ave., NW., Washington, DC 20460.

2. *In person or by courier*. Deliver your comments to: OPPT Document Control Office (DCO) in Rm. 6428, EPA East, 1201 Constitution Ave., NW., Washington, DC. The DCO is open from 8 a.m. to 4 p.m., Monday through Friday, excluding legal holidays. The telephone number for the DCO is (202) 564–8930.

3. *Electronically*. You may submit your comments electronically by e-mail to: oppt.ncic@epa.gov, or mail your computer disk to the address identified above. Do not submit any information electronically that you consider to be CBI. Electronic comments must be submitted as an ASCII file avoiding the use of special characters and any form of encryption. Comments and data will also be accepted on standard disks in WordPerfect 6.1/8.0 or ASCII file format. All comments in electronic form must be identified by docket control number OPPTS–50639C. Electronic comments may also be filed online at many Federal Depository Libraries.

D. How Should I Handle CBI Information That I Want to Submit to the Agency?

Do not submit any information electronically that you consider to be CBI. You may claim information that you submit to EPA in response to this document as CBI by marking any part or all of that information as CBI. Information so marked will not be disclosed except in accordance with procedures set forth in 40 CFR part 2. In addition to one complete version of the comment that includes any information claimed as CBI, a copy of the comment that does not contain the information claimed as CBI must be submitted for inclusion in the public version of the official record. Information not marked confidential will be included in the public version of the official record without prior notice. If you have any questions about CBI or the procedures for claiming CBI, please consult the technical person

listed under **FOR FURTHER INFORMATION CONTACT**.

E. What Should I Consider as I Prepare My Comments for EPA?

We invite you to provide your views on the various options we propose, new approaches we have not considered, the potential impacts of the various options (including possible unintended consequences), and any data or information that you would like the Agency to consider during the development of the final action. You may find the following suggestions helpful for preparing your comments:

1. Explain your views as clearly as possible.
2. Describe any assumptions that you used.
3. Provide copies of any technical information and/or data you used that support your views.
4. If you estimate potential burden or costs, explain how you arrived at the estimate that you provide.
5. Provide specific examples to illustrate your concerns.
6. Offer alternative ways to improve the proposed rule or collection activity.
7. Make sure to submit your comments by the deadline in this document.
8. To ensure proper receipt by EPA, be sure to identify the docket control number assigned to this action in the subject line on the first page of your response. You may also provide the name, date, and **Federal Register** citation.

II. Background

A. What Action is the Agency Taking?

The Agency is supplementing the proposed SNUR published in the **Federal Register** of October 18, 2000 (65 FR 62319) (FRL–6745–5), to take into account comments submitted on that proposed rule, to amend the list of chemical substances to which the proposed SNUR would apply, and to more clearly define significant new uses of these chemical substances. This supplemental proposed rule would require persons to notify EPA at least 90 days before commencing the manufacture or import of the chemical substances identified in Table 2, Unit I.A., for the significant new uses described in this document. The chemical substances identified in Table 2, Unit I.A., are 75 chemical substances, including PFOSH, PFOSS, POSF, certain higher and lower homologues of PFOSH and POSF, and certain other chemical substances, including polymers, that are derived from PFOSH and its homologues. These chemicals are collectively referred to throughout this proposed rule as PFAS. In the original proposed SNUR, these chemicals were referred to collectively as perfluorooctylsulfonates, or PFOS, but commenters noted that this generic usage of the term PFOS was inconsistent with the use by the manufacturer, the Minnesota Mining and Manufacturing Company (3M), of PFOS to refer only to chemicals with an eight-carbon, or C8, chain length. Many of the chemicals in the proposed SNUR include a range of carbon chain lengths, although they all include C8 within the range. Accordingly, EPA will use the generic term PFAS to refer to any carbon chain length, including higher and lower homologues as well as C8, and the term PFOS to represent only those chemical substances which are predominantly C8.

The significant new uses described by this document are:

1. Any manufacture or import for any use of any chemical listed in Table 2, Unit I.A., on or after January 1, 2003, except as noted in Unit II.A.2.

2. Manufacture or import of any chemical listed in Table 2, Unit I.A., solely for one or more of the following specific uses shall not be considered as a significant new use subject to reporting under this section:

i. Use as an anti-erosion additive in fire-resistant phosphate ester aviation hydraulic fluids.

ii. Use as a component of a photoresist substance, including a photo acid generator or surfactant, or as a component of an anti-reflective coating, used in a photomicrolithography process to produce semiconductors or similar components of electronic or other miniaturized devices.

iii. Use as an intermediate only to produce other chemical substances to be used solely for the uses listed in Unit II.A.2.i. or ii.

iv. Use in a surface tension and static discharge control coating on films, papers, and printing plates, or as a surfactant or defoamer in solutions used to process films and papers, in traditional and laser medical imaging and in industrial and consumer film products.

B. What is the Agency's Authority for Taking this Action?

Section 5(a)(2) of TSCA (15 U.S.C. 2604(a)(2)) authorizes EPA to determine that a use of a chemical substance is a ''significant new use.'' The Agency makes this determination by rule after considering all relevant factors, including those listed in TSCA section 5(a)(2). These factors include the volume of a chemical substance's production; the extent to which a use changes the type, form, magnitude, or duration of exposure to the substance; and the reasonably anticipated manner of producing or otherwise managing the substance. Once EPA makes this determination and promulgates a SNUR, TSCA section 5(a)(1)(B) requires persons to submit a significant new use notice (SNUN) to EPA at least 90 days before they manufacture, import, or process the chemical substance for that significant new use (15 U.S.C. 2604 (a)(1)(B)).

C. Which General Provisions Apply?

General provisions for SNURs are published under 40 CFR part 721, subpart A. These provisions describe persons subject to the rule, recordkeeping requirements, exemptions to reporting requirements, and applicability of the rule to uses occurring before the effective date of the final rule. Note that because this proposed rule would designate certain manufacturing and importing activities as significant new uses, persons that solely process or use the chemical substances that would be covered by this action would not be subject to the rule. Provisions relating to user fees appear at 40 CFR part 700. Persons subject to this proposed SNUR would be required to comply with the same notice requirements and EPA regulatory procedures as submitters of PMNs under TSCA section 5(a)(1)(A). In particular, these requirements include: The information submission requirements of TSCA section 5(b) and 5(d)(1); the exemptions authorized by TSCA section 5 (h)(1), (2), (3), and (5); the export notification provisions of TSCA section 12(b); and the export notification requirements in 40 CFR part 707, subpart D. Once EPA receives a SNUN, EPA may take regulatory action under TSCA sections 5(e), 5(f), 6, or 7, if appropriate, to control the activities on which it has received the SNUN. If EPA does not take action, EPA is required under TSCA section 5(g) to explain in the **Federal Register** its reasons for not taking action.

III. Summary of this Supplemental Proposed Rule

The chemical substances subject to this supplemental proposed SNUR are listed in Table 2, Unit I.A. These chemical substances include PFOSH, PFOSS, POSF, certain higher and lower homologues of PFOSH and POSF, and certain other chemical substances, including polymers, that are derived from PFOSH and its homologues. All of these chemical substances are referred to collectively in this proposed rule as perfluoroalkyl sulfonates, or PFAS. In the original proposed SNUR (65 FR

62319, October 18, 2000), these chemicals had been referred to collectively as perfluorooctylsulfonates, or PFOS, but commenters noted that this generic usage of PFOS was inconsistent with 3M's use of PFOS to refer only to chemicals with an eight-carbon, or C8, chain length. Many of the chemicals in the proposed SNUR included a range of carbon chain lengths, although they all did include C8 within the range. Accordingly, EPA will use the generic term PFAS to refer to any chain length, including higher and lower homologues as well as C8, and the term PFOS to represent only those chemicals which are predominantly C8.

All of the chemical substances listed in this supplemental proposed SNUR have the potential to degrade to PFOSH in the environment. Information also suggests that these chemical substances may be converted to PFOSH via incomplete oxidation during the incineration of PFAS-containing materials. Once PFOSH has been released to the environment, it does not undergo further chemical (hydrolysis), microbial, or photolytic degradation. PFOSH is highly persistent in the environment and has a strong tendency to bioaccumulate. Studies have found PFOS chemicals in very small quantities in the blood of the general human population as well as in wildlife, indicating that exposure to the chemicals is widespread, and recent tests have raised concerns about their potential developmental, reproductive, and systemic toxicity (Refs. 1, 2, and 3). These facts, taken together, raise concerns for long term potential adverse effects in people and wildlife over time if PFOS should continue to be produced, released, and built up in the environment. A detailed discussion of these concerns appeared in the original proposed SNUR (65 FR 62319, October 18, 2000) and in the EPA Hazard Assessment document in the docket for the proposed SNUR (Ref. 4). In its comments on the proposed SNUR, 3M emphasized that no data indicated that adverse effects were currently being observed in humans and wildlife. 3M also noted that additional data under development might change some of the EPA's preliminary conclusions. 3M challenged the simplification in the preamble of EPA's characterization of certain of the hazard studies analyzed in the EPA Hazard Assessment, which 3M felt overstated some of the EPA's hazard conclusions. None of the other comments submitted on the proposal addressed the hazards, environmental fate, or exposures associated with these chemicals as described in the original proposed SNUR.

The original proposed SNUR included these and 15 other chemicals, and would have identified as a significant new use: Any manufacture or import of any of these chemicals for any use on or after January 1, 2003; and any manufacture or import in excess of specified volume limits between January 1, 2001, and December 31, 2002.

At the request of prospective commenters, EPA extended the date for submitting comments from November 17, 2000, to January 1, 2001 (65 FR 69889, November 21, 2000) (FRL–6756–9). Twenty-six timely comments were submitted on the proposed SNUR. Because of the complexity of the issues and the interest expressed by the commenters, EPA announced a public meeting on the proposed SNUR (66 FR 11243, February 23, 2001) (FRL–6771–4), which was conducted on March 27, 2001, to provide commenters with the opportunity to expand upon their comments, offer clarifications, and further explain their issues and concerns. At that meeting, several participants expressed a willingness to gather and submit additional information concerning their need for and specific use of certain of these chemicals, and EPA indicated that it would consider those post-meeting submissions as a formal part of the rulemaking record. EPA requested that these submissions include specific information on PFAS exposures and releases associated with various uses, as well as documentation about the extent to which PFAS chemical substances on the proposed SNUR lists were being obtained for specific uses from sources other than 3M, and thus would not be affected by 3M's unilateral decision to discontinue production. (Ref. 5) The final such submission was received by the EPA on October 3, 2001. All of these submissions are in the docket for this proceeding.

Following review and consideration of all the comments, correspondence, and additional submissions, EPA determined that the proposed SNUR should be promulgated as final for the 13 chemicals, employed principally in coatings for textiles, carpet, apparel, leather, and paper, on which no comments were received and which 3M, the sole manufacturer, confirmed were discontinued from manufacture before December 31, 2000. EPA also removed from the rule two chemicals that had appeared by error in the original proposed SNUR. That final rule is published elsewhere in today's issue of the **Federal Register**.

EPA determined that the remaining 75 chemicals, which appear in Table 2, Unit I.A., presented issues that warranted the proposal of this supplemental SNUR. Commenters provided information confirming that, contrary to the information available to the EPA when the original proposed SNUR was published, 3M was not the sole manufacturer of certain of the chemical substances on Table 2, Unit I.A., which commenters were importing in small quantities below mandatory reporting thresholds for their specific uses from non-3M sources outside the United States prior to the publication of the proposed SNUR. The identities, amounts, and suppliers of those specific chemicals were claimed as confidential business information (CBI), and thus cannot be specifically identified in this proposed rule.

To the extent that specific PFAS chemical substances on the proposed SNUR lists were being obtained from sources other than 3M for specific uses prior to the publication of the proposed SNUR, and thus would not be affected by 3M's unilateral decision to discontinue production, those particular uses of those specific chemicals would be considered ongoing and would not be subject to a significant new use determination. These specific uses are: As a component of a photoresist substance, including a photo acid generator or surfactant, or as a component of an anti-reflective coating, used in a photomicrolithography process to produce semiconductors or similar components of electronic or other miniaturized devices.

Accordingly, this supplemental proposed SNUR identifies these specific uses of those particular chemicals as not being significant new uses of the chemicals listed in Table 2, Unit I.A., and thus as not being subject to this proposed SNUR.

Some commenters in this industry who were not importing from non-3M sources indicated that they were using certain chemicals listed in the proposed SNUR, as well as other PFAS chemicals that were not included in the proposed SNUR. Both individually and through an industry-wide submission of mass balance data tracking the use and final disposition of these PFAS chemicals, all commenters in this industry indicated that these chemicals were used in very small quantities under 2,000 kilograms (kg) (4,400 lbs) per year total in the United States, under controlled conditions that virtually eliminated occupational exposures to the chemicals and presented very low releases to the environment. They also presented information on the lack of viable

alternatives for these chemicals because of their unique performance characteristics, and described their efforts to further reduce the use of PFAS chemicals and to continually improve their handling and disposal practices to reduce or eliminate PFAS exposures and releases. (Ref. 6)

Given the extremely low volume of use and the stringent controls on exposure and releases, EPA is proposing not to include in the definition of significant new use the manufacture or import of chemicals listed in Table 2, Unit I.A., including chemicals which had not been imported from non-3M sources prior to the publication of the proposed SNUR, for use as a component of a photoresist substance, including a photo acid generator or surfactant, or a component of an anti-reflective coating, used in a photomicrolithography process to produce semiconductors or similar components of electronic or other miniaturized devices. EPA is proposing this exclusion in recognition of the industry's commitment to continue to pursue better controls to ensure that this use will not increase the type, magnitude, or duration of exposure to PFAS chemicals.

Three commenters also provided information indicating that their specific use of the 3M formulations FC93 and FC98, which contain three of the PFAS chemicals (CAS Nos. 2795–39–3, 67584–42–3, and 68156–01–4) listed in Table 2, Unit I.A, as an anti-erosion additive in fire-resistant phosphate ester aviation hydraulic fluids, was critical to the safe performance of large cargo and passenger aircraft, and that there are at present no viable alternatives to PFAS for this use. These commenters also indicated that, although 3M has been their source, the PFAS chemicals used in this application have also been produced by other foreign sources prior to the publication of the SNUR, although they have not been imported. They reported that the total aggregate use of PFAS in this application by all aviation consumers is less than 5,000 lbs per year (2,273 kg), and that because these systems are sealed at the time of manufacture, worker exposures and releases to the environment are minimal. They noted that ongoing research for possible replacement chemicals could not produce viable alternatives for several years, because of requirements that these products meet military specifications or gain approval from the Federal Aviation Administration (FAA). (Refs. 7, 8, 9, and 10) Based on the information presented, including the very low volume of use and the low potential for exposure, as well as the critical safety nature of the use, EPA proposes to exclude the manufacture or import of these PFAS chemicals for use in this application from the definition of significant new use.

Commenters in the semiconductor and aviation hydraulics industries also indicated that, in order to produce the specific PFAS chemicals used in their applications, certain additional chemicals on the list in Table 2, Unit I.A., would be required for use as intermediate chemicals in the manufacturing process. Accordingly, EPA proposes to exclude from the significant new use definition the use of these PFAS chemicals as intermediates only to produce other chemicals used solely for the excluded semiconductor and aviation hydraulics uses.

Commenters in the photography industry, in addition to raising the semiconductor applications addressed earlier in this section, also identified as critical the use of certain PFAS chemicals in surface tension and static discharge control coatings on films, papers, and printing plates, and as surfactants and defoamers in solutions used to process films and papers, particularly in both traditional and laser medical imaging and in some industrial and consumer film products. The industry estimated the total annual use of these PFAS chemicals in medical imaging for disease diagnosis at 30,600 kg (67,320 lbs), with another 5,400 kg (11,880 lbs) used per year in industrial (i.e., oil pipeline x-ray; aerial reconnaissance photography) and some consumer applications. Some information on specific chemicals used in these applications, as well as on the sources of those chemicals, was claimed as confidential. Specific information on exposures and releases from all these uses was not provided. These commenters indicated that they were conducting research to find alternatives to these PFAS chemicals in these uses, but that they believed they would not be able to find and technically qualify viable alternatives for use before the end of the phase-out period. (Refs. 11 and 12)

EPA is proposing to exclude these photographic uses from the definition of significant new use in the SNUR, based on its understanding that the industry is actively working to move away from these PFAS chemicals and to reduce the use and release of PFAS. EPA is concerned, however, that these uses, while much lower in volume than the discontinued coating uses on textiles, apparel, carpet, furniture, and paper, are substantially greater in volume than the semiconductor and aviation uses for which exclusions are being proposed, and much less is known about the extent of exposures and releases related to these uses. EPA is concerned that new manufacture or importation for these photographic uses may significantly affect the type, magnitude, and duration of exposure to these chemicals because of their known persistence. EPA therefore specifically requests comment on this proposed exclusion of these photographic uses from the significant new use definition, particularly addressing the anticipated exposures and releases that may result from these uses, and including information on handling and disposal controls that would control, reduce, or eliminate such exposures and releases. In the absence of such information to confirm the Agency's understanding and support the proposed exclusion, EPA may include these photographic uses in the definition of significant new uses that would be subject to this SNUR at such time as a final rule is promulgated, perhaps defining the new use based on a volume cap on new manufacture or importation intended for this use.

Accordingly, EPA proposes to require persons to notify EPA at least 90 days before commencing the manufacture or import of the chemical substances identified in Table 2, Unit I.A., for the significant new uses described in this document. The significant new uses described by this notice are:

1. Any manufacture or import for any use of any chemical listed in Table 2 of Unit I.A., on or after January 1, 2003, except as noted Unit III.2.

2. Manufacture or import of any chemical listed in Table 2, Unit I.A., solely for one or more of the following specific uses shall not be considered as a significant new use subject to reporting under this section:

i. Use as an anti-erosion additive in fire-resistant phosphate ester aviation hydraulic fluids.

ii. Use as a component of a photoresist substance, including a photo acid generator or surfactant, or as a component of an anti-reflective coating, used in a photomicrolithography process to produce semiconductors or similar components of electronic or other miniaturized devices.

iii. Use as an intermediate only to produce other chemical substances to be used solely for the uses listed in Unit III.2.i. or ii.

iv. Use in a surface tension and static discharge control coating on films, papers, and printing plates, or as a surfactant or defoamer in solutions used to process films and papers, in traditional and laser medical imaging

and in industrial and consumer film products.

IV. Applicability of Proposed Rule to Uses Occurring Before the Effective Date of the Final Rule

EPA believes that the intent of TSCA section 5(a)(1)(B) is best served by designating a use as a significant new use as of the proposal date of the SNUR, rather than as of the effective date of the final rule. If uses begun after publication of the proposed SNUR were considered to be ongoing, rather than new, it would be difficult for EPA to establish SNUR notice requirements, because any person could defeat the SNUR by initiating the proposed significant new use before the rule became final, and then argue that the use was ongoing.

Persons who begin commercial manufacture or import of the PFAS chemicals listed in Table 2, Unit I.A., for the significant new uses listed in this proposed SNUR after the proposal has been published must stop that activity before the effective date of the final rule. Persons who ceased those activities will have to meet all SNUR notice requirements and wait until the end of the notice review period, including all extensions, before engaging in any activities designated as significant new uses. If, however, persons who begin commercial manufacture or import of these chemical substances between the proposal and the effective date of the SNUR meet the conditions of advance compliance as codified at 40 CFR 721.45(h), those persons will be considered to have met the final SNUR requirements for those activities.

V. Summary and Response to Comments on Original Proposed Rule

EPA received 26 timely comments on the original proposed SNUR, and numerous additional presentations and correspondence at and following the public meeting. As described in this unit and in Unit III., all of these materials were taken into consideration in the preparation of this supplemental proposed SNUR. All of these materials have been placed in docket OPPTS–50639.

One comment addressed the use of PFOS in aqueous film-forming foam (AFFF) fire fighting products, and commended the Agency for terminating this application. 3M voluntarily exited this market, and was the only producer of PFOS-based AFFF, although non-PFOS-based AFFF products using other fluorinated surfactants remain in use and are unaffected by this proposed regulation. EPA is continuing to investigate these related fluorinated surfactants to determine whether they may present issues and concerns similar to those associated with PFOS.

One comment indicated that certain of the chemicals on the list were in use and registered as active ingredients in pesticide formulations, and that chemicals in such use, being regulated by the Federal Insecticide, Fungicide, and Rodenticide Act (FIFRA), would be excluded from the TSCA definition of a ''chemical substance'' and would thus not be subject to the proposed SNUR or other reporting requirements under TSCA. Pesticides are excluded from regulation under TSCA, although pesticide intermediates (chemicals manufactured for the purpose of producing regulated pesticide ingredients) are subject to TSCA regulation. Following the publication of the proposed SNUR, however, the pesticide registrants voluntarily negotiated product stewardship agreements with the EPA Office of Pesticide Programs to cancel some registered products and to phase out others.

Three commenters noted that three PFAS chemicals included in the proposed SNUR (CAS Nos. 2795–39–3, 67584–42–3, and 68156–01–4) were components of 3M products FC93 and FC 98, currently being used in very small concentrations (generally less than 500 parts per million (ppm), or 0.05% PFOS) as anti-erosion additives in fire-resistant phosphate ester aviation hydraulic fluids, and that these uses were critical to the safe functioning of control surfaces, brakes, steering, and landing gear on virtually all large cargo, military, and passenger transport aircraft. The commenters indicated that untreated phosphate ester fluids, used for their high fire resistance, support electrochemical erosion of control valves within sealed hydraulic systems, and that these PFAS chemicals were the only additives discovered in twenty years of research that could eliminate this problem. They indicated that the total aggregate use of PFAS in this application by all aviation consumers is less than 5,000 lbs (2,273 kg) per year, and that because these systems are sealed at the time of manufacture, worker exposures and releases to the environment are minimal. They noted that ongoing research for possible replacement chemicals could not produce any viable alternatives for several years, because of requirements that these products meet military specifications or gain approval from FAA. Given the low volumes involved, the minimal exposure and release potential, the aviation safety requirements, and the demonstrated lack of viable alternatives, EPA is proposing to exclude the manufacture or importation of PFAS chemicals specifically for use as an anti-erosion additive in fire-resistant phosphate ester aviation hydraulic fluids from the definition of significant new use to which this proposed SNUR would apply. No SNUN would thus be required from a company or individual manufacturing or importing any of the PFAS chemicals on Table 2, Unit I.A., for this specific use.

Several companies in the semiconductor industry submitted comments and participated in meetings both individually and through their respective trade associations, indicating that 3M was not the only supplier of the specific PFAS chemicals used in their particular applications; some companies supplied confidential data indicating that they had been importing very small quantities of certain of these chemicals from non-3M sources. At the time the original SNUR was proposed, EPA was unaware that this importation was taking place, because the quantities involved were below the threshold for reporting such importation to the EPA. Both individually and through an industry-wide mass balance submission, the commenters indicated that these chemicals were used in very small quantities, under 2,000 kg (4,400 lbs) per year total in the United States, under controlled conditions that virtually eliminated occupational exposures to the chemicals. They also presented information concerning their search for and conversion to non-PFOS chemicals in certain applications, as well as ongoing modifications to their wastewater handling and treatment operations that would dramatically reduce their PFAS releases to the environment. They expressed an interest in continuing to work with the EPA to further reduce the use of PFAS, but indicated that, at present, viable alternatives for PFAS have not been qualified for two uses critical to both the commercial success of the industry and to its technological contributions to national security: as a component of a photoresist substance, including a photo acid generator or surfactant, or as a component of an anti-reflective coating, used in a photomicrolithography process to produce semiconductors or similar components of electronic or other miniaturized devices.

Because companies had been importing certain of the chemical substances on Table 2, Unit I.A., in very small quantities from non-3M sources for use as a component of a photoresist substance or an anti-reflective coating used in a photomicrolithography process prior to the publication of the

original proposed SNUR, EPA considers those uses of those particular substances to be ongoing, and the continuing manufacture or import of those specific PFAS chemicals for those uses, particularly in the small amounts and under the types of exposure and release controls described by the commenters, would thus not be subject to the SNUR, as reflected in this supplemental proposal. EPA further proposes to exclude from the significant new use definition these specific uses of the additional PFAS chemicals on Table 2, Unit I.A, which had not previously been imported into the United States from non-3M sources. In proposing this exclusion, EPA recognizes that the amounts involved are small, and that the industry has committed to continue to pursue better controls to ensure that this use will not increase the type, magnitude, or duration of exposure to PFAS chemicals. No SNUN would thus be required from a company or individual manufacturing or importing any of the PFAS chemicals on Table 2, Unit I.A. for this specific use.

Commenters in both the aviation and semiconductor industries also indicated that certain chemical substances listed in the SNUR are essential chemical intermediates required to make the PFAS products that are actually used in electronics manufacture and hydraulic fluids. EPA proposes to exclude from the significant new use definition the use of listed PFAS chemicals as intermediates only to produce other chemical substances to be used solely for the semiconductor and aviation uses already described.

EPA commends the aviation and semiconductor industries in particular for their diligence in providing useful tools and information and in working with the Agency to achieve a full understanding of the issues presented by PFAS in these industries. EPA further acknowledges their pledge to continue to work toward further reductions in the use and release of PFAS chemicals notwithstanding the proposed identification of these low volume, low release, and controlled exposure uses as not included within the definition of significant new uses subject to this SNUR.

Four companies and a trade association presented comments and supplementary correspondence concerning the use of PFAS chemicals in the photography industry. To the extent that those comments concerned photomicrolithography in the semiconductor context, they are addressed above in the EPA's response to the semiconductor industry in this unit. Separately from the semiconductor issues, the photography industry also identified as critical the use of certain PFAS chemicals in surface tension and static discharge control coatings on films, papers, and printing plates, and as surfactants and defoamers in solutions used to process films and papers, particularly in both traditional and laser medical imaging and in some industrial and consumer film products. The industry estimated the total annual use of these PFAS chemicals in medical imaging for disease diagnosis at 30,600 kg (67,320 lbs), with another 5,400 kg (11,880 lbs) used per year in industrial (i.e., oil pipeline x-ray; aerial reconnaissance photography) and some consumer applications. Specific information on exposures and releases from all these uses was not provided. Some of the specific chemicals used, the sources from which those chemicals were obtained, and the amounts used by individual companies were claimed as confidential business information. The photographic industry commenters expressed willingness to work toward reducing the amount of PFAS being used in their applications, but indicated concern that viable alternatives might not be available or qualified by the phase-out date announced by 3M and reflected in the original proposed SNUR. They requested an extension of the phase-out period for their claimed critical use applications.

The phase-out dates in the original proposed SNUR were determined by 3M's voluntary commitment to discontinue production of these PFAS chemicals. The basis for EPA's original SNUR proposal was that any production of these chemicals following the 3M phaseout would by definition be new, since at the time the proposal issued, 3M had been the sole producer; and any new production would necessarily affect the type, magnitude, and duration of exposure, because these chemicals are persistent. New production would add to the base amount of these chemicals already present in the environment, and widespread exposure to these chemicals has been demonstrated through the detection of PFOS in the blood of the general population and of wildlife.

The commenters did not propose a time frame for an extended phase-out of these chemicals for their specific use. Because the amount of time that might be required is uncertain, instead of proposing a specific extension of the phase-out period, EPA is proposing to exclude these photographic uses from the definition of a significant new use under the SNUR, on the understanding that the industry is actively working to move away from these PFAS chemicals and to reduce the use and release of PFAS. EPA is concerned, however, that these uses, while much lower in volume than the discontinued coating uses on textiles, apparel, carpet, furniture, and paper, are substantially greater than the semiconductor and aviation uses for which exclusions are also being proposed, and much less is known about the extent of exposures and releases related to these uses. EPA is concerned that these photographic uses may significantly affect the type, magnitude, and duration of exposure to these chemicals because of their known persistence. EPA therefore specifically requests comment on this proposed exclusion of these photographic uses, particularly addressing the anticipated exposures and releases that may result from these uses, and including information on handling and disposal controls that would control, reduce, or eliminate such exposures and releases. In the absence of such information to confirm the Agency's understanding and support the proposed exclusion, EPA may include these photographic uses in the definition of significant new uses that would be subject to this SNUR at such time as a final rule is promulgated, perhaps defining the new use based on a volume cap on new manufacture or importation intended for this use.

One commenter indicated that it imported small quantities of some of the chemicals listed in the original proposed SNUR for various applications, but gave no further information to identify which chemicals it imported, or whether 3M—which has production facilities abroad—was the source of the imported chemicals. Some of the uses mentioned in this comment have been addressed in this unit in the contexts of the industries which provided more details on use. Without more specific substantiation of the asserted importation, this comment cannot be further addressed.

One private citizen commended the EPA for taking action on PFOS, but noted that there must be more PFAS chemicals on the Inventory than were listed in the original SNUR, and that similar action should be taken to address those other chemicals. EPA is evaluating other PFAS and PFAS-related chemicals, but used the mechanism of the proposed SNUR to address the specific chemicals that it had sufficient reason to believe were either not currently in use or were being phased out by their sole producer. If regulatory action on other PFAS or PFAS-related chemicals is warranted, EPA will propose appropriate action when its evaluation is complete.

The National Aeronautics and Space Administration (NASA) noted that it used many chemicals in its Space Shuttle program and was not certain at the time of its initial comment submission whether those would include any of the PFAS chemicals in the proposed SNUR. EPA has not received any subsequent communications from NASA that would indicate that NASA concluded that the proposed SNUR would present issues.

3M provided comments suggesting some changes in the acronyms used in the proposed SNUR to make them consistent with the nomenclature customarily used by 3M and the industry. 3M also requested minor changes to the two tables of chemicals listed in the SNUR to correct the assignment of four chemicals to the wrong table, and to remove two chemicals that had not been included in 3M's phaseout plan. EPA adopted the 3M nomenclature and made the table adjustments. 3M emphasized that no data indicated that adverse effects were currently being observed in humans and wildlife. 3M also noted that additional data under development might change some of the EPA's preliminary conclusions. 3M challenged the simplification in the preamble of EPA's characterization of certain of the hazard studies analyzed in the EPA Hazard Assessment, which 3M felt overstated some of the hazard conclusions that were drawn in the assessment. 3M requested that these statements be rephrased more accurately in any discussion of hazard in the final rule.

VI. References

These references have been placed in the official record that was established under docket control number OPPTS–50639 for this rulemaking as indicated in Unit I.B.2. Reference documents identified with an Administrative Record number (AR) are cross-indexed to non-regulatory, publicly accessible information files maintained in the TSCA Nonconfidential Information Center. Copies of these documents can be obtained as described in Unit I.B.2.

1. (AR226–0620) Sulfonated Perfluorochemicals in the Environment: Sources, Dispersion, Fate, and Effects. 3M. St. Paul, MN. March 1, 2000.

2. (AR226–0547) The Science of Organic Fluorochemistry. 3M. St. Paul, MN. February 5, 1999.

3. (AR226–0548) Perfluorooctane Sulfonate: Current Summary of Human Sera, Health and Toxicology Data. 3M. St. Paul, MN. January 21, 1999.

4. Seed, Jennifer. Hazard Assessment and Biomonitoring Data on Perfluorooctane Sulfonate—PFOS. USEPA/OPPT/RAD. Washington, DC. August 31, 2000.

5. Dominiak, Mary. PFOS Public Meeting Summary and Attendee List. USEPA/OPPT/CCD. Washington, DC. April 27, 2001.

6. Harper, Stephen and Dripps, Greg. Letter (with appendices) to Charles M. Auer. Semicondustor Industry Association and Semiconductor Equipment and Materials International. Washington, DC. October 3, 2001.

7. Jarnot, Bruce. Comments of ExxonMobil Lubricants and Petroleum Specialties. Fairfax, VA. November 16, 2000.

8. Frank, Matthew. Comments of Boeing. Arlington, VA. November 17, 2000.

9. Downes, Jim. Comments of Solutia. St. Louis, MO. November 13, 2000.

10. Downes, Jim. Supplementary Comments of Solutia at EPA Public Meeting. Washington, DC. March 27, 2001.

11. O'Donoghue, John. PFOS and Imaging. Presentation of Photographic and Imaging Manufacturers Association at EPA Public Meeting. Washington, DC. March 27, 2001.

12. O'Donoghue, John. Letter to Charles M. Auer, Followup to the March 27, 2001 Public Meeting. Rochester, NY. April 24, 2001.

VII. Regulatory Assessment Requirements

Under Executive Order 12866, entitled *Regulatory Planning and Review* (58 FR 51735, October 4, 1993), the Office of Management and Budget (OMB) has determined that SNURs are not a ''significant regulatory action'' subject to review by OMB, because SNURs do not meet the criteria in section 3(f) of the Executive order.

Based on EPA's experience with past SNURs, State, local, and tribal governments have not been impacted by these rules, and EPA does not have any reasons to believe that any State, local, or tribal government will be impacted by this proposed rule. As such, EPA has determined that this regulatory action does not impose any enforceable duty, contain any unfunded mandate, or otherwise have any affect on small governments subject to the requirements of sections 202, 203, 204, or 205 of the Unfunded Mandates Reform Act of 1995 (UMRA) (Public Law 104–4).

This proposed rule does not have tribal implications because it is not expected to have substantial direct effects on Indian Tribes. This does not significantly or uniquely affect the communities of Indian tribal governments, nor does it involve or impose any requirements that affect Indian Tribes. Accordingly, the requirements of section 3(b) of Executive Order 13084, entitled *Consultation and Coordination with Indian Tribal Governments* (63 FR 276755, May 19, 1998), do not apply to this proposed rule. Executive Order 13175, entitled *Consultation and Coordination with Indian Tribal Governments* (65 FR 67249, November 6, 2000), which took effect on January 6, 2001, revokes Executive Order 13084 as of that date. EPA developed this proposed rule, however, during the period when Executive Order 13084 was in effect; thus, EPA addressed tribal considerations under Executive Order 13084. For the same reasons stated for Executive Order 13084, the requirements of Executive Order 13175 do not apply to this proposed rule either. Nor will this action have a substantial direct effect on States, on the relationship between the national government and the States, or on the distribution of power and responsibilities among the various levels of government, as specified in Executive Order 13132, entitled *Federalism* (64 FR 43255, August 10, 1999).

This proposed rule is not subject to Executive Order 13211, entitled *Actions Concerning Regulations That Significantly Affect Energy Supply, Distribution, or Use* (66 FR 28355, May 22, 2001), because this action is not expected to affect energy supply, distribution, or use.

In issuing this proposed rule, EPA has taken the necessary steps to eliminate drafting errors and ambiguity, minimize potential litigation, and provide a clear legal standard for affected conduct, as required by section 3 of Executive Order 12988, entitled *Civil Justice Reform* (61 FR 4729, February 7, 1996).

EPA has complied with Executive Order 12630, entitled *Governmental Actions and Interference with Constitutionally Protected Property Rights* (53 FR 8859, March 15, 1988), by examining the takings implications of this proposed rule in accordance with the ''Attorney General's Supplemental Guidelines for the Evaluation of Risk and Avoidance of Unanticipated Takings'' issued under the Executive order.

This action does not involve special considerations of environmental justice related issues as required by Executive Order 12898, entitled *Federal Actions to Address Environmental Justice in Minority Populations and Low-Income Populations* (59 FR 7629, February 16, 1994).

This action is not subject to Executive Order 13045, entitled *Protection of*

Children from Environmental Health Risks and Safety Risks (62 FR 19885, April 23, 1997), because this is not an economically significant regulatory action as defined by Executive Order 12866, and this action does not address environmental health or safety risks disproportionately affecting children.

In addition, since this action does not involve any technical standards, section 12(d) of the National Technology Transfer and Advancement Act of 1995 (NTTAA), Public Law 104–113, section 12(d) (15 U.S.C. 272 note), does not apply to this action.

Pursuant to section 605(b) of the Regulatory Flexibility Act (RFA) (5 U.S.C. 601 *et seq.*), the Agency hereby certifies that promulgation of this SNUR will not have a significant adverse economic impact on a substantial number of small entities. A SNUR applies to any person (including small or large entities) who intends to engage in any activity described in the rule as a ''significant new use.'' Based on all information currently available to EPA, it appears that no small or large entities currently engage in such activity. Since a SNUR requires merely that any person who intends to engage in such activity in the future must first notify EPA (by submitting a SNUN), no economic impact will even occur until someone decides to engage in those activities. As a voluntary action, it is reasonable to presume that this decision would be based on a determination by the person submitting the SNUN that the potential benefits would outweigh the costs. Although some small entities may decide to conduct such activities in the future, EPA cannot presently determine how many, if any, there may be. EPA's experience to date is that, in response to the promulgation of over 530 SNURs, the Agency has received fewer than 15 SNUNs. Of those SNUNs submitted, none appear to be from small entities. In fact, EPA expects to receive few, if any, SNUNs from either large or small entities in response to any SNUR. Therefore, EPA believes that, the economic impact of complying with a SNUR is not expected to be significant or adversely impact a substantial number of small entities. This rationale has been provided to the Chief Counsel for Advocacy of the Small Business Administration.

According to the Paperwork Reduction Act (PRA), 44 USC 3501 *et seq.*, an agency may not conduct or sponsor, and a person is not required to respond to a collection of information that requires OMB approval under the PRA, unless it has been approved by OMB and displays a currently valid OMB control number. The OMB control numbers for EPA's regulations, after initial display in the **Federal Register** and in addition to its display on any related collection instrument, are listed in 40 CFR part 9.

The information collection requirements related to this action have already been approved by OMB pursuant to the PRA under OMB control number 2070–0038 (EPA ICR No. 1188.06). This action does not impose any burden requiring additional OMB approval. If an entity were to submit a SNUN to the Agency, the annual burden is estimated to average between 98.96 and 118.92 hours per response at an estimated reporting cost of between $5,957 and $7,192 per SNUN. This burden estimate includes the time needed to review instructions, search existing data sources, gather and maintain the data needed, and complete, review and submit the required SNUN, and maintain the required records. This burden estimate does not include 1 hour of technical time at $64.30 per hour estimated to be required for customer notification of SNUR requirements, or the $2,500 user fee for submission of a SNUN ($100 for businesses with less than $40 million in annual sales).

Send any comments about the accuracy of the burden estimate, and any suggested methods for minimizing respondent burden, including through the use of automated collection techniques, as instructed in Unit I.D. or to the Director, Collection Strategies Division, Office of Environmental Information, Environmental Protection Agency (2822), 1200 Pennsylvania Ave., NW., Washington, DC 20460. Please remember to include the OMB control number in any correspondence, but do not submit any completed forms to this address.

List of Subjects in 40 CFR Part 721

Environmental protection, Chemicals, Hazardous materials, Reporting and recordkeeping requirements, Significant new uses.

Dated: March 4, 2002.

William H. Sanders, III,

Director, Office of Pollution Prevention and Toxics.

Therefore, it is proposed that 40 CFR chapter I be amended as follows:

PART 721—[AMENDED]

1. The authority citation for part 721 would continue to read as follows:

Authority: 15 U.S.C. 2604, 2607, and 2625(c).

2. By revising § 721.9582 in subpart E to read as follows:

§ 721.9582 Certain perfluoralkyl sulfonates.

(a) *Chemical substances and significant new uses subject to reporting.* (1) The chemical substances listed in Table 1 and Table 2 of this paragraph are subject to reporting under this section for the significant new uses described in paragraph (a)(2) of this section.

TABLE 1.—PFAS CHEMICALS SUBJECT TO REPORTING ON OR AFTER JANUARY 1, 2001

CAS No./PMN	CAS Ninth Collective Index Name
2250–98–8	1-Octanesulfonamide, N,N',N''-[phosphinylidynetris(oxy-2,1-ethanediyl)]tris[N-ethyl-1,1,2,2,3,3,4,4,5,5,6,6,7,7,8,8,8-heptadecafluoro-
30381–98–7	1-Octanesulfonamide, N,N'-[phosphinicobis(oxy-2,1-ethanediyl)]bis[N-ethyl-1,1,2,2,3,3,4,4,5,5,6,6,7,7,8,8,8-heptadecafluoro-, ammonium salt
57589–85–2	Benzoic acid, 2,3,4,5-tetrachloro-6-[[[3-[[(heptadecafluorooctyl)sulfonyl]oxy]phenyl]amino]carbonyl]-, monopotassium salt
61660–12–6	1-Octanesulfonamide, N-ethyl-1,1,2,2,3,3,4,4,5,5,6,6,7,7,8,8,8-heptadecafluoro-N-[3-(trimethoxysilyl)propyl]-
67969–69–1	1-Octanesulfonamide, N-ethyl-1,1,2,2,3,3,4,4,5,5,6,6,7,7,8,8,8-heptadecafluoro-N-[2-(phosphonooxy)ethyl]-, diammonium salt

TABLE 1.—PFAS CHEMICALS SUBJECT TO REPORTING ON OR AFTER JANUARY 1, 2001—Continued

CAS No./PMN	CAS Ninth Collective Index Name
68608–14–0	Sulfonamides, C4-8-alkane, perfluoro, N-ethyl-N-(hydroxyethyl), reaction products with 1,1'-methylenebis[4-isocyanatobenzene]
70776–36–2	2-Propenoic acid, 2-methyl-, octadecyl ester, polymer with 1,1-dichloroethene, 2-[[(heptadecafluorooctyl)sulfonyl]methylamino]ethyl 2-propenoate, N-(hydroxymethyl)-2-propenamide, 2-[methyl[(nonafluorobutyl)sulfonyl]amino]ethyl 2-propenoate, 2-[methyl[(pentadecafluoroheptyl)sulfonyl]amino]ethyl 2-propenoate, 2-[methyl[(tridecafluorohexyl)sulfonyl]amino]ethyl 2-propenoate and 2-[methyl[(undecafluoropentyl)sulfonyl]amino]ethyl 2-propenoate
127133–66–8	2-Propenoic acid, 2-methyl-, polymers with Bu methacrylate, lauryl methacrylate and 2-[methyl[(perfluoro-C4-8-alkyl)sulfonyl]amino]ethyl methacrylate
148240–78–2	Fatty acids, C18-unsatd., trimers, 2-[[(heptadecafluorooctyl)sulfonyl]methylamino]ethyl esters
148684–79–1	Sulfonamides, C4-8-alkane, perfluoro, N-(hydroxyethyl)-N-methyl, reaction products with 1,6-diisocyanatohexane homopolymer and ethylene glycol
178535–22–3	Sulfonamides, C4-8-alkane, perfluoro, N-ethyl-N-(hydroxyethyl)-, polymers with 1,1'-methylenebis[4-isocyanatobenzene] and polymethylenepolyphenylene isocyanate, 2-ethylhexyl esters, Me Et ketone oxime-blocked
P–94–2205	Polymethylenepolyphenylene isocyanate and bis(4-NCO-phenyl)methane reaction products with 2-ethyl-1-hexanol, 2-butanone, oxime, N-ethyl-N-(2- hydroxyethyl)-1-C4-C8 perfluoroalkanesulfonamide
P–96–1645 306974–63–0	Fatty acids, C18-unsatd., dimers, 2-[methyl[(perfluoro-C4-8-alkyl)sulfonyl]amino]ethyl esters

TABLE 2.—PFAS CHEMICALS SUBJECT TO REPORTING ON OR AFTER JANUARY 1, 2003

CAS No./PMN	CAS Ninth Collective Index Name
307–35–7	1-Octanesulfonyl fluoride, 1,1,2,2,3,3,4,4,5,5,6,6,7,7,8,8,8-heptadecafluoro-
307–51–7	1-Decanesulfonyl fluoride, 1,1,2,2,3,3,4,4,5,5,6,6,7,7,8,8,9,9,10,10,10-heneicosafluoro-
376–14–7	2-Propenoic acid, 2-methyl-, 2-[ethyl[(heptadecafluorooctyl)sulfonyl]amino]ethyl ester
383–07–3	2-Propenoic acid, 2-[butyl[(heptadecafluorooctyl)sulfonyl]amino]ethyl ester
423–50–7	1-Hexanesulfonyl fluoride, 1,1,2,2,3,3,4,4,5,5,6,6,6-tridecafluoro-
423–82–5	2-Propenoic acid, 2-[ethyl[(heptadecafluorooctyl)sulfonyl]amino]ethyl ester
754–91–6	1-Octanesulfonamide, 1,1,2,2,3,3,4,4,5,5,6,6,7,7,8,8,8-heptadecafluoro-
1652–63–7	1-Propanaminium, 3-[[(heptadecafluorooctyl)sulfonyl]amino]-N,N,N-trimethyl-, iodide
1691–99–2	1-Octanesulfonamide, N-ethyl-1,1,2,2,3,3,4,4,5,5,6,6,7,7,8,8,8-heptadecafluoro-N-(2-hydroxyethyl)-
1763–23–1	1-Octanesulfonic acid, 1,1,2,2,3,3,4,4,5,5,6,6,7,7,8,8,8-heptadecafluoro-
2795–39–3	1-Octanesulfonic acid, 1,1,2,2,3,3,4,4,5,5,6,6,7,7,8,8,8-heptadecafluoro-, potassium salt
2991–51–7	Glycine, N-ethyl-N-[(heptadecafluorooctyl)sulfonyl]-, potassium salt
4151–50–2	1-Octanesulfonamide, N-ethyl-1,1,2,2,3,3,4,4,5,5,6,6,7,7,8,8,8-heptadecafluoro-
14650–24–9	2-Propenoic acid, 2-methyl-, 2-[[(heptadecafluorooctyl)sulfonyl]methylamino]ethyl ester
17202–41–4	1-Nonanesulfonic acid, 1,1,2,2,3,3,4,4,5,5,6,6,7,7,8,8,9,9,9-nonadecafluoro-, ammonium salt
24448–09–7	1-Octanesulfonamide, 1,1,2,2,3,3,4,4,5,5,6,6,7,7,8,8,8-heptadecafluoro-N-(2-hydroxyethyl)-N-methyl-
25268–77–3	2-Propenoic acid, 2-[[(heptadecafluorooctyl)sulfonyl]methylamino]ethyl ester
29081–56–9	1-Octanesulfonic acid, 1,1,2,2,3,3,4,4,5,5,6,6,7,7,8,8,8-heptadecafluoro-, ammonium salt
29117–08–6	Poly(oxy-1,2-ethanediyl), .alpha.-[2-[ethyl[(heptadecafluorooctyl)sulfonyl]amino]ethyl]-.omega.-hydroxy-
29457–72–5	1-Octanesulfonic acid, 1,1,2,2,3,3,4,4,5,5,6,6,7,7,8,8,8-heptadecafluoro-, lithium salt

TABLE 2.—PFAS CHEMICALS SUBJECT TO REPORTING ON OR AFTER JANUARY 1, 2003—Continued

CAS No./PMN	CAS Ninth Collective Index Name
31506–32–8	1-Octanesulfonamide, 1,1,2,2,3,3,4,4,5,5,6,6,7,7,8,8,8-heptadecafluoro-N-methyl-
38006–74–5	1-Propanaminium, 3-[[(heptadecafluorooctyl)sulfonyl]amino]-N,N,N-trimethyl-, chloride
38850–58–7	1-Propanaminium, N-(2-hydroxyethyl)-N,N-dimethyl-3-[(3-sulfopropyl)[(tridecafluorohexyl)sulfonyl]amino]-, inner salt
55120–77–9	1-Hexanesulfonic acid, 1,1,2,2,3,3,4,4,5,5,6,6,6-tridecafluoro-, lithium salt
67584–42–3	Cyclohexanesulfonic acid, decafluoro(pentafluoroethyl)-, potassium salt
67906–42–7	1-Decanesulfonic acid, 1,1,2,2,3,3,4,4,5,5,6,6,7,7,8,8,9,9,10,10,10-heneicosafluoro-, ammonium salt
68156–01–4	Cyclohexanesulfonic acid, nonafluorobis(trifluoromethyl)-, potassium salt
68298–62–4	2-Propenoic acid, 2-[butyl[(heptadecafluorooctyl)sulfonyl]amino]ethyl ester, telomer with 2-[butyl[(pentadecafluoroheptyl)sulfonyl]amino]ethyl 2-propenoate, methyloxirane polymer with oxirane di-2-propenoate, methyloxirane polymer with oxirane mono-2-propenoate and 1-octanethiol
68329–56–6	2-Propenoic acid, eicosyl ester, polymer with 2-[[(heptadecafluorooctyl)sulfonyl]methylamino]ethyl 2-propenoate, hexadecyl 2-propenoate, 2-[methyl[(nonafluorobutyl)sulfonyl]amino]ethyl 2-propenoate, 2-[methyl[(pentadecafluoroheptyl)sulfonyl]amino]ethyl 2-propenoate, 2-[methyl[(tridecafluorohexyl)sulfonyl]amino]ethyl 2-propenoate, 2-[methyl[(undecafluoropentyl)sulfonyl]amino]ethyl 2-propenoate and octadecyl 2-propenoate
68541–80–0	2-Propenoic acid, polymer with 2-[ethyl[(heptadecafluorooctyl)sulfonyl]amino]ethyl 2-methyl-2-propenoate and octadecyl 2-propenoate
68555–90–8	2-Propenoic acid, butyl ester, polymer with 2-[[(heptadecafluorooctyl)sulfonyl]methylamino]ethyl 2-propenoate, 2-[methyl[(nonafluorobutyl)sulfonyl]amino]ethyl 2-propenoate, 2-[methyl[(pentadecafluoroheptyl)sulfonyl]amino]ethyl 2-propenoate, 2-[methyl[(tridecafluorohexyl)sulfonyl]amino]ethyl 2-propenoate and 2-[methyl[(undecafluoropentyl)sulfonyl]amino]ethyl 2-propenoate
68555–91–9	2-Propenoic acid, 2-methyl-, 2-[ethyl[(heptadecafluorooctyl)sulfonyl]amino]ethyl ester, polymer with 2-[ethyl[(nonafluorobutyl)sulfonyl]amino] ethyl 2-methyl-2-propenoate, 2-[ethyl[(pentadecafluoroheptyl)sulfonyl]amino]ethyl 2-methyl-2-propenoate, 2-[ethyl[(tridecafluorohexyl)sulfonyl]amino]ethyl 2-methyl-2-propenoate, 2-[ethyl[(undecafluoropentyl)sulfonyl]amino]ethyl 2-methyl-2-propenoate and octadecyl 2-methyl-2-propenoate
68555–92–0	2-Propenoic acid, 2-methyl-, 2-[[(heptadecafluorooctyl)sulfonyl]methylamino]ethyl ester, polymer with 2-[methyl[(nonafluorobutyl)sulfonyl]amino]ethyl 2-methyl-2-propenoate, 2-[methyl[(pentadecafluoroheptyl)sulfonyl]amino]ethyl 2-methyl-2-propenoate, 2-[methyl[(tridecafluorohexyl)sulfonyl]amino]ethyl 2-methyl-2-propenoate, 2-[methyl[(undecafluoropentyl)sulfonyl]amino]ethyl 2-methyl-2-propenoate and octadecyl 2-methyl-2-propenoate
68586–14–1	2-Propenoic acid, 2-[[(heptadecafluorooctyl)sulfonyl]methylamino]ethyl ester, telomer with 2-[methyl[(nonafluorobutyl)sulfonyl]amino]ethyl 2-propenoate, .alpha.-(2-methyl-1-oxo-2-propenyl)-.omega.-hydroxypoly(oxy-1,2-ethanediyl), .alpha.-(2-methyl-1-oxo-2-propenyl)-.omega.-[(2-methyl-1-oxo-2-propenyl)oxy]poly(oxy-1,2-ethanediyl), 2-[methyl[(pentadecafluoroheptyl)sulfonyl]amino]ethyl 2-propenoate, 2-[methyl[(tridecafluorohexyl)sulfonyl]amino]ethyl 2-propenoate, 2-[methyl[(undecafluoropentyl)sulfonyl]amino]ethyl 2-propenoate and 1-octanethiol
68649–26–3	1-Octanesulfonamide, N-ethyl-1,1,2,2,3,3,4,4,5,5,6,6,7,7,8,8,8-heptadecafluoro-N-(2-hydroxyethyl)-, reaction products with N-ethyl-1,1,2,2,3,3,4,4,4-nonafluoro-N-(2-hydroxyethyl)-1-butanesulfonamide, N-ethyl-1,1,2,2,3,3,4,4,5,5,6,6,7,7,7-pentadecafluoro-N-(2-hydroxyethyl)-1-heptanesulfonamide, N-ethyl-1,1,2,2,3,3,4,4,5,5,6,6,6-tridecafluoro-N-(2-hydroxyethyl)-1-hexanesulfonamide, N-ethyl-1,1,2,2,3,3,4,4,5,5,5-undecafluoro-N-(2-hydroxyethyl)-1-pentanesulfonamide, polymethylenepolyphenylene isocyanate and stearyl alc.
68891–96–3	Chromium, diaquatetrachloro[.mu.-[N-ethyl-N-[(heptadecafluorooctyl)sulfonyl]glycinato-.kappa.O:.kappa.O']]-.mu.-hydroxybis(2-methyl-1-propanol)di-
68867–60–7	2-Propenoic acid, 2-[[(heptadecafluorooctyl)sulfonyl]methylamino]ethyl ester, polymer with 2-[methyl[(nonafluorobutyl)sulfonyl]amino]ethyl 2-propenoate, 2-[methyl[(pentadecafluoroheptyl)sulfonyl]amino]ethyl 2-propenoate, 2-[methyl[(tridecafluorohexyl)sulfonyl]amino]ethyl 2-propenoate, 2-[methyl[(undecafluoropentyl)sulfonyl]amino]ethyl 2-propenoate and .alpha.-(1-oxo-2-propenyl)-.omega.-methoxypoly (oxy-1,2-ethanediyl)

TABLE 2.—PFAS CHEMICALS SUBJECT TO REPORTING ON OR AFTER JANUARY 1, 2003—Continued

CAS No./PMN	CAS Ninth Collective Index Name
68867–62–9	2-Propenoic acid, 2-methyl-, 2-[ethyl[(heptadecafluorooctyl)sulfonyl]amino]ethyl ester, telomer with 2-[ethyl[(nonafluorobutyl)sulfonyl]amino]ethyl 2-methyl-2-propenoate, 2-[ethyl[(pentadecafluoroheptyl)sulfonyl]amino]ethyl 2-methyl-2-propenoate, 2-[ethyl[(tridecafluorohexyl)sulfonyl]amino]ethyl 2-methyl-2-propenoate, 2-[ethyl[(undecafluoropentyl)sulfonyl]amino]ethyl 2-methyl-2-propenoate, 1-octanethiol and .alpha.-(1-oxo-2-propenyl)-.omega.-methoxypoly(oxy-1,2-ethanediyl)
68909–15–9	2-Propenoic acid, eicosyl ester, polymers with branched octyl acrylate, 2-[[(heptadecafluorooctyl)sulfonyl]methylamino]ethyl acrylate, 2-[methyl[(nonafluorobutyl)sulfonyl]amino]ethyl acrylate, 2-[methyl[(pentadecafluoroheptyl)sulfonyl]amino]ethyl acrylate, 2-[methyl[(tridecafluorohexyl)sulfonyl]amino]ethyl acrylate, 2-[methyl[(undecafluoropentyl)sulfonyl]amino]ethyl acrylate, polyethylene glycol acrylate Me ether and stearyl acrylate
68958–61–2	Poly(oxy-1,2-ethanediyl), .alpha.-[2-[ethyl[(heptadecafluorooctyl)sulfonyl]amino]ethyl]-.omega.-methoxy-
70225–14–8	1-Octanesulfonic acid, 1,1,2,2,3,3,4,4,5,5,6,6,7,7,8,8,8-heptadecafluoro-, compd. with 2,2'-iminobis[ethanol] (1:1)
71487–20–2	2-Propenoic acid, 2-methyl-, methyl ester, polymer with ethenylbenzene, 2-[[(heptadecafluorooctyl)sulfonyl]methylamino]ethyl 2-propenoate, 2-[methyl[(nonafluorobutyl)sulfonyl]amino]ethyl 2-propenoate, 2-[methyl[(pentadecafluoroheptyl)sulfonyl]amino]ethyl 2-propenoate, 2-[methyl[(tridecafluorohexyl)sulfonyl]amino]ethyl 2-propenoate, 2-[methyl[(undecafluoropentyl)sulfonyl]amino]ethyl 2-propenoate and 2-propenoic acid
73772–32–4	1-Propanesulfonic acid, 3-[[3-(dimethylamino)propyl][(tridecafluorohexyl)sulfonyl]amino]-2-hydroxy-, monosodium salt
81190–38–7	1-Propanaminium, N-(2-hydroxyethyl)-3-[(2-hydroxy-3-sulfopropyl)[(tridecafluorohexyl)sulfonyl]amino]-N,N-dimethyl-, hydroxide, monosodium salt
91081–99–1	Sulfonamides, C4-8-alkane, perfluoro, N-(hydroxyethyl)-N-methyl, reaction products with epichlorohydrin, adipates (esters)
94133–90–1	1-Propanesulfonic acid, 3-[[3-(dimethylamino)propyl][(heptadecafluorooctyl)sulfonyl]amino]-2-hydroxy-, monosodium salt
98999–57–6	Sulfonamides, C7-8-alkane, perfluoro, N-methyl-N-[2-[(1-oxo-2-propenyl)oxy]ethyl], polymers with 2-ethoxyethyl acrylate, glycidyl methacrylate and N,N,N-trimethyl-2-[(2-methyl-1-oxo-2-propenyl)oxy]ethanaminium chloride
117806–54–9	1-Heptanesulfonic acid, 1,1,2,2,3,3,4,4,5,5,6,6,7,7,7-pentadecafluoro-, lithium salt
129813–71–4	Sulfonamides, C4-8-alkane, perfluoro, N-methyl-N-(oxiranylmethyl)
148240–80–6	Fatty acids, C18-unsatd., trimers, 2-[methyl[(tridecafluorohexyl)sulfonyl]amino]ethyl esters
148240–82–8	Fatty acids, C18-unsatd., trimers, 2-[methyl[(pentadecafluoroheptyl)sulfonyl]amino]ethyl esters
182700–90–9	1-Octanesulfonamide, 1,1,2,2,3,3,4,4,5,5,6,6,7,7,8,8,8-heptadecafluoro-N-methyl-, reaction products with benzene-chlorine-sulfur chloride (S2Cl2) reaction products chlorides
L–92–0151	2-Propenoic acid, 2-methyl-, butyl ester, polymer with 2-[ethyl[(heptadecafluorooctyl)sulfonyl]amino]ethyl 2-methyl-2-propenoate, 2-[ethyl[(nonafluorobutyl)sulfonyl]amino]ethyl 2-methyl-2-propenoate, 2-[ethyl[(pentadecafluoroheptyl)sulfonyl]amino]ethyl 2-methyl-2-propenoate, 2-[ethyl[(tridecafluorohexyl)sulfonyl]amino]ethyl 2-methyl-2-propenoate and 2-propenoic acid
P–80–0183 192662–29–6	Sulfonamides, C4-8-alkane, perfluoro, N-[3-(dimethylamino)propyl], reaction products with acrylic acid
P–83–1102 306973–46–6	Fatty acids, linseed-oil, dimers, 2-[[(heptadecafluorooctyl)sulfonyl]methylamino]ethyl esters
P–84–1163 306975–56–4	Propanoic acid, 3-hydroxy-2-(hydroxymethyl)-2-methyl-, polymer with 2-ethyl-2-(hydroxymethyl)-1,3-propanediol and N,N',2-tris(6-isocyanatohexyl)imidodicarbonic diamide, reaction products with N-ethyl-1,1,2,2,3,3,4,4,5,5,6,6,7,7,8,8,8-heptadecafluoro-N-(2-hydroxyethyl)-1-octanesulfonamide and N-ethyl-1,1,2,2,3,3,4,4,5,5,6,6,7,7,7-pentadecafluoro-N-(2-hydroxyethyl)-1-heptanesulfonamide, compds. with triethylamine

TABLE 2.—PFAS CHEMICALS SUBJECT TO REPORTING ON OR AFTER JANUARY 1, 2003—Continued

CAS No./PMN	CAS Ninth Collective Index Name
P–84–1171 306975–57–5	Propanoic acid, 3-hydroxy-2-(hydroxymethyl)-2-methyl-, polymer with 1,1'-methylenebis[4-isocyanatobenzene] and 1,2,3-propanetriol, reaction products with N-ethyl-1,1,2,2,3,3,4,4,5,5,6,6,7,7,8,8,8-heptadecafluoro-N-(2-hydroxyethyl)-1-octanesulfonamide and N-ethyl-1,1,2,2,3,3,4,4,5,5,6,6,7,7,7-pentadecafluoro-N-(2-hydroxyethyl)-1-heptanesulfonamide, compds. with morpholine
P–86–0301 306973–47–7	Sulfonamides, C4-8-alkane, perfluoro, N-(hydroxyethyl)-N-methyl, reaction products with 12-hydroxystearic acid and 2,4-TDI, ammonium salts
P–86–0958 306975–62–2	2-Propenoic acid, 2-methyl-, dodecyl ester, polymers with 2-[methyl[(perfluoro-C4-8-alkyl)sulfonyl]amino]ethyl acrylate and vinylidene chloride
P–89–0799 160901–25–7	Sulfonamides, C4-8-alkane, perfluoro, N-ethyl-N-(hydroxyethyl), reaction products with 2-ethyl-1-hexanol and polymethylenepolyphenylene isocyanate
P–90–0111 306974–19–6	Sulfonamides, C4-8-alkane, perfluoro, N-methyl-N-[(3-octadecyl-2-oxo-5-oxazolidinyl)methyl]
P–91–1419 306975–84–8	Poly(oxy-1,2-ethanediyl), .alpha.-hydro-.omega.-hydroxy-, polymer with 1,6-diisocyanatohexane, N-(2-hydroxyethyl)-N-methyl perfluoro C4-8-alkane sulfonamides-blocked
P–93–1444 306975–85–9	2-Propenoic acid, 2-methyl-, dodecyl ester, polymers with N-(hydroxymethyl)-2-propenamide, 2-[methyl[(perfluoro-C4-8-alkyl)sulfonyl]amino]ethyl methacrylate, stearyl methacrylate and vinylidene chloride
P–94–0545 306976–25–0	1-Hexadecanaminium, N,N-dimethyl-N-[2-[(2-methyl-1-oxo-2-propenyl)oxy]ethyl]-, bromide, polymers with Bu acrylate, Bu methacrylate and 2-[methyl[(perfluoro-C4-8-alkyl)sulfonyl]amino]ethyl acrylate
P–94–0927 306976–55–6	2-Propenoic acid, 2-methyl-, 2-methylpropyl ester, polymer with 2,4-diisocyanato-1-methylbenzene, 2-ethyl-2-(hydroxymethyl)-1,3-propanediol and 2-propenoic acid, N-ethyl-N-(hydroxyethyl)perfluoro-C4-8-alkanesulfonamides-blocked
P–94–2206 306974–28–7	Siloxanes and Silicones, di-Me, mono[3-[(2-methyl-1-oxo-2-propenyl)oxy]propylgroup]-terminated, polymers with 2-[methyl[(perfluoro-C4-8-alkyl)sulfonyl]amino]ethyl acrylate and stearyl methacrylate
P–95–0120 306980–27–8	Sulfonamides, C4-8-alkane, perfluoro, N,N'-[1,6-hexanediylbis[(2-oxo-3,5-oxazolidinediyl)methylene]]bis[N-methyl-
P–96–1262 306974–45–8	Sulfonic acids, C6-8-alkane, perfluoro, compds. with polyethylene-polypropylene glycol bis(2-aminopropyl) ether
P–96–1424 306977–10–6	2-Propenoic acid, 2-methyl-, 2-(dimethylamino)ethyl ester, telomer with 2-[ethyl[(perfluoro-C4-8-alkyl)sulfonyl]amino]ethyl methacrylate and 1-octanethiol, N-oxides
P–96–1433 179005–06–2	Sulfonamides, C4-8-alkane, perfluoro, N-[3-(dimethyloxidoamino)propyl], potassium salts
P–97–0790 251099–16–8	1-Decanaminium, N-decyl-N,N-dimethyl-, salt with 1,1,2,2,3,3,4,4,5,5,6,6,7,7,8,8,8-heptadecafluoro-1-octanesulfonic acid (1:1)
P–98–0251 306978–04–1	2-Propenoic acid, butyl ester, polymers with acrylamide, 2-[methyl[(perfluoro-C4-8-alkyl)sulfonyl]amino]ethyl acrylate and vinylidene chloride
P–98–1272 306977–58–2	2-Propenoic acid, 2-methyl-, 3-(trimethoxysilyl)propyl ester, polymers with acrylic acid, 2-[methyl[(perfluoro-C4-8-alkyl)sulfonyl]amino]ethyl acrylate and propylene glycol monoacrylate, hydrolyzed, compds. with 2,2'-(methylimino)bis[ethanol]
P–99–0188 306978–65–4	Hexane, 1,6-diisocyanato-, homopolymer, N-(hydroxyethyl)-N-methyl perfluoro-C4-8-alkane sulfonamides- and stearyl alc.-blocked
P–99–0319 306979–40–8	Poly(oxy-1,2-ethanediyl), .alpha.-[2-(methylamino)ethyl]-.omega.-[(1,1,3,3-tetramethylbutyl)phenoxy]-, N-[(perfluoro-C4-8-alkyl)sulfonyl] derivs.

(2) The significant new uses are: (i) Any manufacture or import for any use of any chemical listed in Table 1 of paragraph (a)(1) of this section on or after January 1, 2001.

(ii) Any manufacture or import for any use of any chemical listed in Table 2 of paragraph (a)(1) of this section on or after January 1, 2003, except as noted in paragraph (a)(3) of this section.

(3) Manufacture or import of any chemical listed in Table 2 of paragraph (a)(1) of this section for the following specific uses shall not be considered as a significant new use subject to reporting under this section:

(i) Use as an anti-erosion additive in fire-resistant phosphate ester aviation hydraulic fluids.

(ii) Use as a component of a photoresist substance, including a photo

acid generator or surfactant, or as a component of an anti-reflective coating, used in a photomicrolithography process to produce semiconductors or similar components of electronic or other miniaturized devices.

(iii) Use as an intermediate only to produce other chemical substances to be used solely for the uses listed in paragraph (a)(3)(i) or (ii) of this section.

(iv) Use in a surface tension and static discharge control coating on films, papers, and printing plates, or as a surfactant or defoamer in solutions used to process films and papers, in traditional and laser medical imaging and in industrial and consumer film products.

(b) [Reserved]

[FR Doc. 02–5747 Filed 3–8–02; 8:45 am]

BILLING CODE 6560–50–S

Reader Aids

Federal Register

Vol. 67, No. 47

Monday, March 11, 2002

CUSTOMER SERVICE AND INFORMATION

Federal Register/Code of Federal Regulations

General Information, indexes and other finding aids	**202–523–5227**
Laws	**523–5227**
Presidential Documents	
Executive orders and proclamations	**523–5227**
The United States Government Manual	**523–5227**
Other Services	
Electronic and on-line services (voice)	**523–3447**
Privacy Act Compilation	**523–3187**
Public Laws Update Service (numbers, dates, etc.)	**523–6641**
TTY for the deaf-and-hard-of-hearing	**523–5229**

ELECTRONIC RESEARCH

World Wide Web

Full text of the daily Federal Register, CFR and other publications is located at: **http://www.access.gpo.gov/nara**

Federal Register information and research tools, including Public Inspection List, indexes, and links to GPO Access are located at: **http://www.nara.gov/fedreg**

E-mail

FEDREGTOC-L (Federal Register Table of Contents LISTSERV) is an open e-mail service that provides subscribers with a digital form of the Federal Register Table of Contents. The digital form of the Federal Register Table of Contents includes HTML and PDF links to the full text of each document.

To join or leave, go to **http://listserv.access.gpo.gov** and select *Online mailing list archives, FEDREGTOC-L, Join or leave the list (or change settings);* then follow the instructions.

PENS (Public Law Electronic Notification Service) is an e-mail service that notifies subscribers of recently enacted laws.

To subscribe, go to **http://hydra.gsa.gov/archives/publaws-l.html** and select *Join or leave the list* (or change settings); then follow the instructions.

FEDREGTOC-L and **PENS** are mailing lists only. We cannot respond to specific inquiries.

Reference questions. Send questions and comments about the Federal Register system to: **info@fedreg.nara.gov**

The Federal Register staff cannot interpret specific documents or regulations.

FEDERAL REGISTER PAGES AND DATE, MARCH

9389–9580 1
9581–9888 4
9889–10098 5
10099–10318 6
10319–10598 7
10599–10826 8
10826–11030 8

CFR PARTS AFFECTED DURING MARCH

At the end of each month, the Office of the Federal Register publishes separately a List of CFR Sections Affected (LSA), which lists parts and sections affected by documents published since the revision date of each title.

3 CFR

Proclamations:
7525 10311
7526 10313
7527 10315
7528 10317
7529 10553
7530 10825

Administrative Orders:
Presidential Determinations:
No. 2002-07 of February 23, 2002 9889
No. 2002-08 of March 4, 2002 10599
Memorandums:
Memorandum of March 5, 2002 10593

4 CFR

Proposed Rules:
21 9418

5 CFR

630 9581

7 CFR

29 9895
301 9389
900 10827
1200 10827
1703 10830

Proposed Rules:
948 9418
985 10848
1124 9622
1135 9622

8 CFR

217 10260

10 CFR

Proposed Rules:
60 10853

12 CFR

614 9581
619 9581
907 9897
908 9897

Proposed Rules:
966 10337
985 10339

14 CFR

11 9552
21 9552
23 9552
25 10601
36 9552
39 ..... 9390, 9392, 9394, 9395, 9396, 9582, 10099, 10603, 10606, 10831, 10969
63 9552
65 9552
71 ..... 9399, 10833, 10834, 10835, 10836, 10838, 10839, 10840, 10841, 10843
73 9552
91 9552
97 ..... 10319, 10320
119 9552
121 9552
125 9552
129 9552
135 9552

Proposed Rules:
23 ..... 10857, 10858
39 ..... 9420, 9627, 10859, 10862
71 10864

15 CFR

734 ..... 10608, 10611
738 10611
740 ..... 10608, 10611
742 ..... 10608, 10611
743 10611
748 10611
774 ..... 10608, 10611

16 CFR

20 9919
250 9923
259 9924

Proposed Rules:
Ch. 1 9630

18 CFR

1315 9924

19 CFR

Proposed Rules:
10 10636
122 9423

21 CFR

56 9584
58 9584
60 9584
101 9584
522 9400

Proposed Rules:
56 10115

22 CFR

41 10322

24 CFR

Proposed Rules:
17 10818

26 CFR

Proposed Rules:
1 ..... 9631, 9929, 10640

46 10652
301 ....9631, 9929

29 CFR

Proposed Rules:
1910 9934

30 CFR

18 10972
75 10972

31 CFR

103 9874
Proposed Rules:
103 9879

32 CFR

Proposed Rules:
3 9632

33 CFR

165 ...9400, 9588, 9589, 10324, 10325, 10327, 10618
334 10843
Proposed Rules:
151 9632
325 10822
334 10866

34 CFR

Proposed Rules:
Ch. II 9935

37 CFR

202 10329
Proposed Rules:
201 10652

38 CFR

3 10330
36 ....9402, 10619
Proposed Rules:
3 ....9638, 10866

39 CFR

111 10619
Proposed Rules:
111 10340

40 CFR

51 10844
52 .....9403, 9405, 9591, 10099, 10844
62 10620
70 9594
96 10844
97 10844
180 10622
271 9406
721 11008
Proposed Rules:
52 .....9424, 9425, 9640, 10116, 10653
62 10656
70 9641
141 10532
261 10341
271 9427
281 10353
721 11008

42 CFR

413 9556
419 9556
489 9556
Proposed Rules:
403 ....10262, 10293
457 9936

44 CFR

59 10631
61 10631

46 CFR

Proposed Rules:
28 9939
109 9939
122 9939
131 9939
169 9939
185 9939
199 9939

47 CFR

1 10634
22 9596
54 10846
64 9610
73 ....9925, 10846
74 9617
76 10332
Proposed Rules:
Ch. I 10656
1 10658
25 ....9641, 10969
51 10659
54 10867
73 .....9428, 9646, 9945, 10660, 10871, 10872
76 10660

48 CFR

Ch. 1 10529
17 10528
22 10528
36 10528

49 CFR

172 9926
390 9410
1002 10332
Proposed Rules:
538 10873
571 10050

50 CFR

17 10101
600 10490
622 10113
660 10490
679 .....9416, 9928, 10113, 10635, 10847
Proposed Rules:
17 ....9806, 10118
648 ....9646, 10119

REMINDERS

The items in this list were editorially compiled as an aid to Federal Register users. Inclusion or exclusion from this list has no legal significance.

RULES GOING INTO EFFECT MARCH 11, 2002

AGRICULTURE DEPARTMENT

Agricultural Marketing Service

Practice and procedure:

Marketing agreements and orders, petitions, etc.; proceedings; published 3-11-02

AGRICULTURE DEPARTMENT

Rural Utilities Service

Rural development:

Distance Learning and Telemedicine Loan and Grant Program; published 1-23-02

COMMERCE DEPARTMENT

National Oceanic and Atmospheric Administration

Endangered and threatened species:

West Coast salmonids; four evolutionarily significant units; take; published 1-9-02

ENVIRONMENTAL PROTECTION AGENCY

Air programs; State authority delegations:

Virginia; published 1-8-02

Air quality implementation plans; approval and promulgation; various States:

Alaska; published 1-8-02

California; published 2-7-02

Nevada; published 2-8-02

West Virginia; published 2-8-02

FEDERAL COMMUNICATIONS COMMISSION

Digital television stations; table of assignments:

New York; published 2-4-02

Radio stations; table of assignments:

Georgia; published 2-8-02

HEALTH AND HUMAN SERVICES DEPARTMENT

Food and Drug Administration

Human drugs:

Topical antifungal products (OTC); final monograph amendment; published 2-8-02

TRANSPORTATION DEPARTMENT

Federal Aviation Administration

Airworthiness directives:

Boeing; published 2-4-02

Fairchild; published 1-30-02

COMMENTS DUE NEXT WEEK

AGRICULTURE DEPARTMENT

Animal and Plant Health Inspection Service

Viruses, serums, toxins, etc.:

Virus-Serum-Toxin Act; records and reports amendment; comment request; comments due by 3-18-02; published 1-15-02 [FR 02-00938]

COMMERCE DEPARTMENT

National Oceanic and Atmospheric Administration

Fishery conservation and management:

Caribbean, Gulf of Mexico, and South Atlantic fisheries—

South Atlantic shrimp; comments due by 3-21-02; published 2-19-02 [FR 02-03979]

Importation, exportation, and transportation of wildlife:

Incidental take permits—

Chewuch River, WA; habitat conservation plan; comments due by 3-18-02; published 2-15-02 [FR 02-03815]

DEFENSE DEPARTMENT

Engineers Corps

Danger zones and restricted areas:

Kennebec River, ME; Bath Ironworks Shipyard; comments due by 3-18-02; published 2-14-02 [FR 02-03557]

ENVIRONMENTAL PROTECTION AGENCY

Acquisition regulations:

Contractor performance evaluations; comments due by 3-22-02; published 2-20-02 [FR 02-04068]

Air pollutants, hazardous; national emission standards:

Delegations' provisions; clarifications; comments due by 3-18-02; published 1-16-02 [FR 02-00188]

Air pollution control; new motor vehicles and engines:

Heavy-duty diesel engines and vehicles; 2004 and later model year emission standards; nonconformance penalties; comments due by 3-18-02; published 1-16-02 [FR 02-01109]

ENVIRONMENTAL PROTECTION AGENCY

Air quality implementation plans; √A√approval and promulgation; various States; air quality planning purposes; designation of areas:

Massachusetts; comments due by 3-21-02; published 2-19-02 [FR 02-03758]

ENVIRONMENTAL PROTECTION AGENCY

Air quality implementation plans; √A√approval and promulgation; various States; air quality planning purposes; designation of areas:

Massachusetts; comments due by 3-21-02; published 2-19-02 [FR 02-03759]

Pesticides; tolerances in food, animal feeds, and raw agricultural commodities:

Benomyl; comments due by 3-18-02; published 1-15-02 [FR 02-00964]

Casein, etc.; comments due by 3-18-02; published 1-15-02 [FR 02-00699]

Nicotine; comments due by 3-18-02; published 1-16-02 [FR 02-00628]

Sodium starch glycolate; comments due by 3-18-02; published 1-17-02 [FR 02-01247]

Superfund program:

National oil and hazardous substances contingency plan—

National priorities list update; comments due by 3-21-02; published 2-19-02 [FR 02-03655]

ENVIRONMENTAL PROTECTION AGENCY

Superfund program:

National oil and hazardous substances contingency plan—

National priorities list update; comments due by 3-21-02; published 2-19-02 [FR 02-03653]

ENVIRONMENTAL PROTECTION AGENCY

Superfund program:

National oil and hazardous substances contingency plan—

National priorities list update; comments due by 3-21-02; published 2-19-02 [FR 02-03654]

ENVIRONMENTAL PROTECTION AGENCY

Superfund program:

National oil and hazardous substances contingency plan—

National priorities list update; comments due by 3-21-02; published 2-19-02 [FR 02-03764]

ENVIRONMENTAL PROTECTION AGENCY

Superfund program:

National oil and hazardous substances contingency plan—

National priorities list update; comments due by 3-21-02; published 2-19-02 [FR 02-03765]

ENVIRONMENTAL PROTECTION AGENCY

Superfund program:

National oil and hazardous substances contingency plan—

National priorities list update; comments due by 3-22-02; published 2-20-02 [FR 02-03919]

ENVIRONMENTAL PROTECTION AGENCY

Superfund program:

National oil and hazardous substances contingency plan—

National priorities list update; comments due by 3-22-02; published 2-20-02 [FR 02-03920]

Toxic substances:

Significant new uses—

C.I. Pigment orange 20, etc.; comments due by 3-18-02; published 1-15-02 [FR 02-00963]

FEDERAL COMMUNICATIONS COMMISSION

Common carrier services:

Telecommunications Act of 1996; implementation—

Wireline services offering advanced telecommunications capability; deployment; comments due by 3-18-02; published 1-15-02 [FR 02-00902]

Radio stations; table of assignments:

Oklahoma; comments due by 3-18-02; published 2-8-02 [FR 02-03030]

Various States; comments due by 3-18-02; published 2-8-02 [FR 02-03031]

INTERIOR DEPARTMENT

Fish and Wildlife Service

Importation, exportation, and transportation of wildlife:

Incidental take permits—
Chewuch River, WA; habitat conservation plan; comments due by 3-18-02; published 2-15-02 [FR 02-03815]

JUSTICE DEPARTMENT
Executive Office for Immigration Review:
Immigration Appeals Board; case management; procedural reforms; comments due by 3-21-02; published 2-19-02 [FR 02-03801]

JUSTICE DEPARTMENT
Parole Commission
Federal prisoners; paroling and releasing, etc.:
District of Columbia Code—
Parolees arrested and held in District of Columbia on warrants charging them with parole violations; revocation process; comments due by 3-19-02; published 1-18-02 [FR 02-01308]

RAILROAD RETIREMENT BOARD
Railroad Unemployment Insurance Act:
Employers' contributions and contribution reports; filing via Internet; comments due by 3-18-02; published 1-16-02 [FR 02-01095]

TRANSPORTATION DEPARTMENT
Coast Guard
Ports and waterways safety:
North Carolina sea coast and Cape Fear River and Beaufort Inlet approaches; port access routes study; comments due by 3-19-02; published 1-18-02 [FR 02-01371]

TRANSPORTATION DEPARTMENT
Computer reservation systems, carrier-owned; expiration date extension; comments due by 3-18-02; published 2-15-02 [FR 02-03924]

TRANSPORTATION DEPARTMENT
Federal Aviation Administration
Airworthiness directives:
Bell; comments due by 3-18-02; published 1-16-02 [FR 02-01057]
Dassault; comments due by 3-18-02; published 2-15-02 [FR 02-03584]

TRANSPORTATION DEPARTMENT
Federal Aviation Administration
Airworthiness directives:
Eurocopter France; comments due by 3-18-02; published 1-16-02 [FR 02-01056]

TRANSPORTATION DEPARTMENT
Federal Aviation Administration
Airworthiness directives:
MD Helicopters, Inc.; comments due by 3-18-02; published 1-16-02 [FR 02-01058]

TRANSPORTATION DEPARTMENT
Federal Aviation Administration
Airworthiness directives:
MD Helicopters, Inc.; comments due by 3-18-02; published 1-17-02 [FR 02-01054]

TRANSPORTATION DEPARTMENT
Federal Aviation Administration
Airworthiness standards:
Transport category airplanes—
Flightdeck design; security considerations; comments due by 3-18-02; published 1-15-02 [FR 02-00965]

TRANSPORTATION DEPARTMENT
Transportation Security Administration
Aviation security infrastructure fees
Correction; comments due by 3-18-02; published 2-25-02 [FR C2-04148]
Aviation security infrastructure fees; imposition; comments due by 3-18-02; published 2-20-02 [FR 02-04148]

LIST OF PUBLIC LAWS

This is a continuing list of public bills from the current session of Congress which have become Federal laws. It may be used in conjunction with "P L U S" (Public Laws Update Service) on 202–523–6641. This list is also available online at *http://www.nara.gov/fedreg/plawcurr.html*.

The text of laws is not published in the **Federal Register** but may be ordered in "slip law" (individual pamphlet) form from the Superintendent of Documents, U.S. Government Printing Office, Washington, DC 20402 (phone, 202–512–1808). The text will also be made available on the Internet from GPO Access at *http://www.access.gpo.gov/nara/nara005.html*. Some laws may not yet be available.

H.J. Res. 82/P.L. 107–143
Recognizing the 91st birthday of Ronald Reagan. (Feb. 14, 2002; 116 Stat. 17)

S. 737/P.L. 107–144
To designate the facility of the United States Postal Service located at 811 South Main Street in Yerington, Nevada, as the "Joseph E. Dini, Jr. Post Office". (Feb. 14, 2002; 116 Stat. 18)

S. 970/P.L. 107–145
To designate the facility of the United States Postal Service located at 39 Tremont Street, Paris Hill, Maine, as the "Horatio King Post Office Building". (Feb. 14, 2002; 116 Stat. 19)

S. 1026/P.L. 107–146
To designate the United States Post Office located at 60 Third Avenue in Long Branch, New Jersey, as the "Pat King Post Office Building". (Feb. 14, 2002; 116 Stat. 20)

Last List Feburary 14, 2002

Public Laws Electronic Notification Service (PENS)

PENS is a free electronic mail notification service of newly enacted public laws. To subscribe, go to *http://hydra.gsa.gov/archives/publaws-l.html* or send E-mail to **listserv@listserv.gsa.gov** with the following text message:

SUBSCRIBE PUBLAWS-L
Your Name.

Note: This service is strictly for E-mail notification of new laws. The text of laws is not available through this service. **PENS** cannot respond to specific inquiries sent to this address.

CFR CHECKLIST

This checklist, prepared by the Office of the Federal Register, is published weekly. It is arranged in the order of CFR titles, stock numbers, prices, and revision dates.

An asterisk (*) precedes each entry that has been issued since last week and which is now available for sale at the Government Printing Office.

A checklist of current CFR volumes comprising a complete CFR set, also appears in the latest issue of the LSA (List of CFR Sections Affected), which is revised monthly.

The CFR is available free on-line through the Government Printing Office's GPO Access Service at http://www.access.gpo.gov/nara/cfr/index.html. For information about GPO Access call the GPO User Support Team at 1-888-293-6498 (toll free) or 202-512-1530.

The annual rate for subscription to all revised paper volumes is $1195.00 domestic, $298.75 additional for foreign mailing.

Mail orders to the Superintendent of Documents, Attn: New Orders, P.O. Box 371954, Pittsburgh, PA 15250–7954. All orders must be accompanied by remittance (check, money order, GPO Deposit Account, VISA, Master Card, or Discover). Charge orders may be telephoned to the GPO Order Desk, Monday through Friday, at **(202) 512–1800** from 8:00 a.m. to 4:00 p.m. eastern time, or FAX your charge orders to **(202) 512-2250**.

Title	Stock Number	Price	Revision Date
***1, 2 (2** Reserved)	(869–048–00001–1)	9.00	Jan. 1, 2002
3 (1997 Compilation and Parts 100 and 101)	(869–044–00002–4)	36.00	[1] Jan. 1, 2001
***4**	(869–048–00003–8)	9.00	[7] Jan. 1, 2002
5 Parts:			
1–699	(869–044–00004–1)	53.00	Jan. 1, 2001
700–1199	(869–044–00005–9)	44.00	Jan. 1, 2001
1200–End, 6 (6 Reserved)	(869–044–00006–7)	55.00	Jan. 1, 2001
7 Parts:			
1–26	(869–048–00001–1)	41.00	Jan. 1, 2002
27–52	(869–044–00008–3)	45.00	Jan. 1, 2001
53–209	(869–048–00009–7)	36.00	Jan. 1, 2002
210–299	(869–044–00010–5)	56.00	Jan. 1, 2001
300–399	(869–048–00011–9)	42.00	Jan. 1, 2002
*400–699	(869–048–00012–7)	57.00	Jan. 1, 2002
700–899	(869–044–00013–0)	50.00	Jan. 1, 2001
900–999	(869–044–00014–8)	54.00	Jan. 1, 2001
1000–1199	(869–044–00015–6)	24.00	Jan. 1, 2001
1200–1599	(869–044–00016–4)	55.00	Jan. 1, 2001
1600–1899	(869–044–00017–2)	57.00	Jan. 1, 2001
1900–1939	(869–044–00018–1)	21.00	[4] Jan. 1, 2001
1940–1949	(869–044–00019–9)	37.00	[4] Jan. 1, 2001
1950–1999	(869–044–00020–2)	45.00	Jan. 1, 2001
2000–End	(869–044–00021–1)	43.00	Jan. 1, 2001
8	(869–044–00022–9)	54.00	Jan. 1, 2001
9 Parts:			
1–199	(869–044–00023–7)	55.00	Jan. 1, 2001
200–End	(869–044–00024–5)	53.00	Jan. 1, 2001
10 Parts:			
*1–50	(869–048–00025–4)	58.00	Jan. 1, 2002
51–199	(869–044–00026–1)	52.00	Jan. 1, 2001
200–499	(869–044–00027–0)	53.00	Jan. 1, 2001
*500–End	(869–048–00028–3)	58.00	Jan. 1, 2002
11	(869–048–00029–1)	34.00	Jan. 1, 2002
12 Parts:			
1–199	(869–048–00030–5)	30.00	Jan. 1, 2002
*200–219	(869–048–00031–3)	36.00	Jan. 1, 2002
*220–299	(869–048–00032–1)	58.00	Jan. 1, 2002
300–499	(869–048–00033–0)	45.00	Jan. 1, 2002
500–599	(869–044–00034–2)	38.00	Jan. 1, 2001
600–End	(869–044–00035–1)	57.00	Jan. 1, 2001
***13**	(869–048–00036–4)	47.00	Jan. 1, 2002
14 Parts:			
1–59	(869–044–00037–7)	57.00	Jan. 1, 2001
60–139	(869–044–00038–5)	55.00	Jan. 1, 2001
140–199	(869–044–00039–3)	26.00	Jan. 1, 2001
200–1199	(869–044–00040–7)	44.00	Jan. 1, 2001
1200–End	(869–044–00041–5)	37.00	Jan. 1, 2001
15 Parts:			
0–299	(869–044–00042–3)	36.00	Jan. 1, 2001
300–799	(869–044–00043–1)	54.00	Jan. 1, 2001
800–End	(869–044–00044–0)	40.00	Jan. 1, 2001
16 Parts:			
0–999	(869–044–00045–8)	45.00	Jan. 1, 2001
1000–End	(869–044–00046–6)	53.00	Jan. 1, 2001
17 Parts:			
1–199	(869–044–00048–2)	45.00	Apr. 1, 2001
200–239	(869–044–00049–1)	51.00	Apr. 1, 2001
240–End	(869–044–00050–4)	55.00	Apr. 1, 2001
18 Parts:			
1–399	(869–044–00051–2)	56.00	Apr. 1, 2001
400–End	(869–044–00052–1)	23.00	Apr. 1, 2001
19 Parts:			
1–140	(869–044–00053–9)	54.00	Apr. 1, 2001
141–199	(869–044–00054–7)	53.00	Apr. 1, 2001
200–End	(869–044–00055–5)	20.00	[5] Apr. 1, 2001
20 Parts:			
1–399	(869–044–00056–3)	45.00	Apr. 1, 2001
400–499	(869–044–00057–1)	57.00	Apr. 1, 2001
500–End	(869–044–00058–0)	57.00	Apr. 1, 2001
21 Parts:			
1–99	(869–044–00059–8)	37.00	Apr. 1, 2001
100–169	(869–044–00060–1)	44.00	Apr. 1, 2001
170–199	(869–044–00061–0)	45.00	Apr. 1, 2001
200–299	(869–044–00062–8)	16.00	Apr. 1, 2001
300–499	(869–044–00063–6)	27.00	Apr. 1, 2001
500–599	(869–044–00064–4)	44.00	Apr. 1, 2001
600–799	(869–044–00065–2)	15.00	Apr. 1, 2001
800–1299	(869–044–00066–1)	52.00	Apr. 1, 2001
1300–End	(869–044–00067–9)	20.00	Apr. 1, 2001
22 Parts:			
1–299	(869–044–00068–7)	56.00	Apr. 1, 2001
300–End	(869–044–00069–5)	42.00	Apr. 1, 2001
23	(869–044–00070–9)	40.00	Apr. 1, 2001
24 Parts:			
0–199	(869–044–00071–7)	53.00	Apr. 1, 2001
200–499	(869–044–00072–5)	45.00	Apr. 1, 2001
500–699	(869–044–00073–3)	27.00	Apr. 1, 2001
700–1699	(869–044–00074–1)	55.00	Apr. 1, 2001
1700–End	(869–044–00075–0)	28.00	Apr. 1, 2001
25	(869–044–00076–8)	57.00	Apr. 1, 2001
26 Parts:			
§§ 1.0-1–1.60	(869–044–00077–6)	43.00	Apr. 1, 2001
§§ 1.61–1.169	(869–044–00078–4)	57.00	Apr. 1, 2001
§§ 1.170–1.300	(869–044–00079–2)	52.00	Apr. 1, 2001
§§ 1.301–1.400	(869–044–00080–6)	41.00	Apr. 1, 2001
§§ 1.401–1.440	(869–044–00081–4)	58.00	Apr. 1, 2001
§§ 1.441-1.500	(869-044-00082-2)	45.00	Apr. 1, 2001
§§ 1.501–1.640	(869–044–00083–1)	44.00	Apr. 1, 2001
§§ 1.641–1.850	(869–044–00084–9)	53.00	Apr. 1, 2001
§§ 1.851–1.907	(869–044–00085–7)	54.00	Apr. 1, 2001
§§ 1.908–1.1000	(869–044–00086–5)	53.00	Apr. 1, 2001
§§ 1.1001–1.1400	(869–044–00087–3)	55.00	Apr. 1, 2001
§§ 1.1401–End	(869–044–00088–1)	58.00	Apr. 1, 2001
2–29	(869–044–00089–0)	54.00	Apr. 1, 2001
30–39	(869–044–00090–3)	37.00	Apr. 1, 2001
40–49	(869–044–00091–1)	25.00	Apr. 1, 2001
50–299	(869–044–00092–0)	23.00	Apr. 1, 2001
300–499	(869–044–00093–8)	54.00	Apr. 1, 2001
500–599	(869–044–00094–6)	12.00	[5] Apr. 1, 2001
600–End	(869–044–00095–4)	15.00	Apr. 1, 2001
27 Parts:			
1–199	(869–044–00096–2)	57.00	Apr. 1, 2001

Title	Stock Number	Price	Revision Date
200–End	(869–044–00097–1)	26.00	Apr. 1, 2001
28 Parts:			
0-42	(869–044–00098–9)	55.00	July 1, 2001
43-end	(869-044-00099-7)	50.00	July 1, 2001
29 Parts:			
0–99	(869–044–00100–4)	45.00	July 1, 2001
100–499	(869–044–00101–2)	14.00	[6]July 1, 2001
500–899	(869–044–00102–1)	47.00	[6]July 1, 2001
900–1899	(869–044–00103–9)	33.00	July 1, 2001
1900–1910 (§§ 1900 to 1910.999)	(869–044–00104–7)	55.00	July 1, 2001
1910 (§§ 1910.1000 to end)	(869–044–00105–5)	42.00	July 1, 2001
1911–1925	(869–044–00106–3)	20.00	[6]July 1, 2001
1926	(869–044–00107–1)	45.00	July 1, 2001
1927–End	(869–044–00108–0)	55.00	July 1, 2001
30 Parts:			
1–199	(869–044–00109–8)	52.00	July 1, 2001
200–699	(869–044–00110–1)	45.00	July 1, 2001
700–End	(869–044–00111–7)	53.00	July 1, 2001
31 Parts:			
0–199	(869–044–00112–8)	32.00	July 1, 2001
200–End	(869–044–00113–6)	56.00	July 1, 2001
32 Parts:			
1–39, Vol. I		15.00	[2] July 1, 1984
1–39, Vol. II		19.00	[2] July 1, 1984
1–39, Vol. III		18.00	[2] July 1, 1984
1–190	(869–044–00114–4)	51.00	[6]July 1, 2001
191–399	(869–044–00115–2)	57.00	July 1, 2001
400–629	(869–044–00116–8)	35.00	[6]July 1, 2001
630–699	(869–044–00117–9)	34.00	July 1, 2001
700–799	(869–044–00118–7)	42.00	July 1, 2001
800–End	(869–044–00119–5)	44.00	July 1, 2001
33 Parts:			
1–124	(869–044–00120–9)	45.00	July 1, 2001
125–199	(869–044–00121–7)	55.00	July 1, 2001
200–End	(869–044–00122–5)	45.00	July 1, 2001
34 Parts:			
1–299	(869–044–00123–3)	43.00	July 1, 2001
300–399	(869–044–00124–1)	40.00	July 1, 2001
400–End	(869–044–00125–0)	56.00	July 1, 2001
35	(869–044–00126–8)	10.00	[6]July 1, 2001
36 Parts			
1–199	(869–044–00127–6)	34.00	July 1, 2001
200–299	(869–044–00128–4)	33.00	July 1, 2001
300–End	(869–044–00129–2)	55.00	July 1, 2001
37	(869–044–00130–6)	45.00	July 1, 2001
38 Parts:			
0–17	(869–044–00131–4)	53.00	July 1, 2001
18–End	(869–044–00132–2)	55.00	July 1, 2001
39	(869–044–00133–1)	37.00	July 1, 2001
40 Parts:			
1–49	(869–044–00134–9)	54.00	July 1, 2001
50–51	(869–044–00135–7)	38.00	July 1, 2001
52 (52.01–52.1018)	(869–044–00136–5)	50.00	July 1, 2001
52 (52.1019–End)	(869–044–00137–3)	55.00	July 1, 2001
53–59	(869–044–00138–1)	28.00	July 1, 2001
60 (60.1–End)	(869–044–00139–0)	53.00	July 1, 2001
60 (Apps)	(869–044–00140–3)	51.00	July 1, 2001
61–62	(869–044–00141–1)	35.00	July 1, 2001
63 (63.1–63.599)	(869–044–00142–0)	53.00	July 1, 2001
63 (63.600–63.1199)	(869–044–00143–8)	44.00	July 1, 2001
63 (63.1200-End)	(869–044–00144–6)	56.00	July 1, 2001
64–71	(869–044–00145–4)	26.00	July 1, 2001
72–80	(869–044–00146–2)	55.00	July 1, 2001
81–85	(869–044–00147–1)	45.00	July 1, 2001
86 (86.1–86.599–99)	(869–044–00148–9)	52.00	July 1, 2001
86 (86.600–1–End)	(869–044–00149–7)	45.00	July 1, 2001
87–99	(869–044–00150–1)	54.00	July 1, 2001
100–135	(869–044–00151–9)	38.00	July 1, 2001
136–149	(869–044–00152–7)	55.00	July 1, 2001
150–189	(869–044–00153–5)	52.00	July 1, 2001
190–259	(869–044–00154–3)	34.00	July 1, 2001
260–265	(869–044–00155–1)	45.00	July 1, 2001
266–299	(869–044–00156–0)	45.00	July 1, 2001
300–399	(869–044–00157–8)	41.00	July 1, 2001
400–424	(869–044–00158–6)	51.00	July 1, 2001
425–699	(869–044–00159–4)	55.00	July 1, 2001
700–789	(869–044–00160–8)	55.00	July 1, 2001
790–End	(869–044–00161–6)	44.00	July 1, 2001
41 Chapters:			
1, 1–1 to 1–10		13.00	[3] July 1, 1984
1, 1–11 to Appendix, 2 (2 Reserved)		13.00	[3] July 1, 1984
3–6		14.00	[3] July 1, 1984
7		6.00	[3] July 1, 1984
8		4.50	[3] July 1, 1984
9		13.00	[3] July 1, 1984
10–17		9.50	[3] July 1, 1984
18, Vol. I, Parts 1–5		13.00	[3] July 1, 1984
18, Vol. II, Parts 6–19		13.00	[3] July 1, 1984
18, Vol. III, Parts 20–52		13.00	[3] July 1, 1984
19–100		13.00	[3] July 1, 1984
1–100	(869–044–00162–4)	22.00	July 1, 2001
101	(869–044–00163–2)	45.00	July 1, 2001
102–200	(869–044–00164–1)	33.00	July 1, 2001
201–End	(869–044–00165–9)	24.00	July 1, 2001
42 Parts:			
1–399	(869–044–00166–7)	51.00	Oct. 1, 2001
400–429	(869–044–00167–5)	59.00	Oct. 1, 2001
430–End	(869–044–00168–3)	58.00	Oct. 1, 2001
43 Parts:			
1–999	(869–044–00169–1)	45.00	Oct. 1, 2001
1000–end	(869–044–00170–5)	56.00	Oct. 1, 2001
44	(869–044–00171–3)	45.00	Oct. 1, 2001
45 Parts:			
1–199	(869–044–00172–1)	53.00	Oct. 1, 2001
200–499	(869–044–00173–0)	31.00	Oct. 1, 2001
500–1199	(869–044–00174–8)	45.00	Oct. 1, 2001
1200–End	(869–044–00175–6)	55.00	Oct. 1, 2001
46 Parts:			
1–40	(869–044–00176–4)	43.00	Oct. 1, 2001
41–69	(869–044–00177–2)	35.00	Oct. 1, 2001
70–89	(869–044–00178–1)	13.00	Oct. 1, 2001
90–139	(869–044–00179–9)	41.00	Oct. 1, 2001
140–155	(869–044–00180–2)	24.00	Oct. 1, 2001
156–165	(869–044–00181–1)	31.00	Oct. 1, 2001
166–199	(869–044–00182–9)	42.00	Oct. 1, 2001
200–499	(869–044–00183–7)	36.00	Oct. 1, 2001
500–End	(869–044–00184–5)	23.00	Oct. 1, 2001
47 Parts:			
0–19	(869–044–00185–3)	55.00	Oct. 1, 2001
20–39	(869–044–00186–1)	43.00	Oct. 1, 2001
40–69	(869–044–00187–0)	36.00	Oct. 1, 2001
70–79	(869–044–00188–8)	58.00	Oct. 1, 2001
80–End	(869–044–00189–6)	55.00	Oct. 1, 2001
48 Chapters:			
1 (Parts 1–51)	(869–044–00190–0)	60.00	Oct. 1, 2001
1 (Parts 52–99)	(869–044–00191–8)	45.00	Oct. 1, 2001
2 (Parts 201–299)	(869–044–00192–6)	53.00	Oct. 1, 2001
3–6	(869–044–00193–4)	31.00	Oct. 1, 2001
7–14	(869–044–00194–2)	51.00	Oct. 1, 2001
15–28	(869–044–00195–1)	53.00	Oct. 1, 2001
29–End	(869–044–00196–9)	38.00	Oct. 1, 2001
49 Parts:			
1–99	(869–044–00197–7)	55.00	Oct. 1, 2001
100–185	(869–044–00198–5)	60.00	Oct. 1, 2001
186–199	(869–044–00199–3)	18.00	Oct. 1, 2001
200–399	(869–044–00200–1)	60.00	Oct. 1, 2001
400–999	(869–044–00201–9)	58.00	Oct. 1, 2001
1000–1199	(869–044–00202–7)	26.00	Oct. 1, 2001

Title	Stock Number	Price	Revision Date
1200–End	(869–044–00203–5)	21.00	Oct. 1, 2001
50 Parts:			
1–199	(869–044–00204–3)	63.00	Oct. 1, 2001
200–599	(869–044–00205–1)	36.00	Oct. 1, 2001
600–End	(869–044–00206–0)	55.00	Oct. 1, 2001
CFR Index and Findings Aids	(869–044–00047–4)	56.00	Jan. 1, 2001
Complete 2001 CFR set		1,195.00	2001
Microfiche CFR Edition:			
Subscription (mailed as issued)		298.00	2000
Individual copies		2.00	2000
Complete set (one-time mailing)		290.00	2000
Complete set (one-time mailing)		247.00	1999

[1] Because Title 3 is an annual compilation, this volume and all previous volumes should be retained as a permanent reference source.

[2] The July 1, 1985 edition of 32 CFR Parts 1–189 contains a note only for Parts 1–39 inclusive. For the full text of the Defense Acquisition Regulations in Parts 1–39, consult the three CFR volumes issued as of July 1, 1984, containing those parts.

[3] The July 1, 1985 edition of 41 CFR Chapters 1–100 contains a note only for Chapters 1 to 49 inclusive. For the full text of procurement regulations in Chapters 1 to 49, consult the eleven CFR volumes issued as of July 1, 1984 containing those chapters.

[4] No amendments to this volume were promulgated during the period January 1, 2000, through January 1, 2001. The CFR volume issued as of January 1, 2000 should be retained.

[5] No amendments to this volume were promulgated during the period April 1, 2000, through April 1, 2001. The CFR volume issued as of April 1, 2000 should be retained.

[6] No amendments to this volume were promulgated during the period July 1, 2000, through July 1, 2001. The CFR volume issued as of July 1, 2000 should be retained.

[7] No amendments to this volume were promulgated during the period January 1, 2001, through January 1, 2002. The CFR volume issued as of January 1, 2001 should be retained..