AUTHENTICATED
U.S. GOVERNMENT
INFORMATION
GPO

Federal Register

2–01–02 Friday
Vol. 67 No. 22 Feb. 1, 2002
Pages 4869–5040

The **FEDERAL REGISTER** is published daily, Monday through Friday, except official holidays, by the Office of the Federal Register, National Archives and Records Administration, Washington, DC 20408, under the Federal Register Act (44 U.S.C. Ch. 15) and the regulations of the Administrative Committee of the Federal Register (1 CFR Ch. I). The Superintendent of Documents, U.S. Government Printing Office, Washington, DC 20402 is the exclusive distributor of the official edition.

The **Federal Register** provides a uniform system for making available to the public regulations and legal notices issued by Federal agencies. These include Presidential proclamations and Executive Orders, Federal agency documents having general applicability and legal effect, documents required to be published by act of Congress, and other Federal agency documents of public interest.

Documents are on file for public inspection in the Office of the Federal Register the day before they are published, unless the issuing agency requests earlier filing. For a list of documents currently on file for public inspection, see http://www.nara.gov/fedreg.

The seal of the National Archives and Records Administration authenticates the Federal Register as the official serial publication established under the Federal Register Act. Under 44 U.S.C. 1507, the contents of the **Federal Register** shall be judicially noticed.

The **Federal Register** is published in paper and on 24x microfiche. It is also available online at no charge as one of the databases on GPO Access, a service of the U.S. Government Printing Office.

The online edition of the **Federal Register** is issued under the authority of the Administrative Committee of the Federal Register as the official legal equivalent of the paper and microfiche editions (44 U.S.C. 4101 and 1 CFR 5.10). It is updated by 6 a.m. each day the **Federal Register** is published and it includes both text and graphics from Volume 59, Number 1 (January 2, 1994) forward.

GPO Access users can choose to retrieve online **Federal Register** documents as TEXT (ASCII text, graphics omitted), PDF (Adobe Portable Document Format, including full text and all graphics), or SUMMARY (abbreviated text) files. Users should carefully check retrieved material to ensure that documents were properly downloaded.

On the World Wide Web, connect to the **Federal Register** at http://www.access.gpo.gov/nara. Those without World Wide Web access can also connect with a local WAIS client, by Telnet to swais.access.gpo.gov, or by dialing (202) 512–1661 with a computer and modem. When using Telnet or modem, type swais, then log in as guest with no password.

For more information about GPO Access, contact the GPO Access User Support Team by E-mail at gpoaccess@gpo.gov; by fax at (202) 512–1262; or call (202) 512–1530 or 1–888–293–6498 (toll free) between 7 a.m. and 5 p.m. Eastern time, Monday–Friday, except Federal holidays.

The annual subscription price for the **Federal Register** paper edition is $699, or $764 for a combined **Federal Register, Federal Register** Index and List of CFR Sections Affected (LSA) subscription; the microfiche edition of the **Federal Register** including the **Federal Register** Index and LSA is $264. Six month subscriptions are available for one-half the annual rate. The charge for individual copies in paper form is $10.00 for each issue, or $10.00 for each group of pages as actually bound; or $2.00 for each issue in microfiche form. All prices include regular domestic postage and handling. International customers please add 25% for foreign handling. Remit check or money order, made payable to the Superintendent of Documents, or charge to your GPO Deposit Account, VISA, MasterCard or Discover. Mail to: New Orders, Superintendent of Documents, P.O. Box 371954, Pittsburgh, PA 15250–7954.

There are no restrictions on the republication of material appearing in the **Federal Register.**

How To Cite This Publication: Use the volume number and the page number. Example: 67 FR 12345.

SUBSCRIPTIONS AND COPIES

PUBLIC	
Subscriptions:	
Paper or fiche	**202–512–1800**
Assistance with public subscriptions	**202–512–1806**
General online information	**202–512–1530; 1–888–293–6498**
Single copies/back copies:	
Paper or fiche	**202–512–1800**
Assistance with public single copies	**1–866–512–1800 (Toll-Free)**
FEDERAL AGENCIES	
Subscriptions:	
Paper or fiche	**202–523–5243**
Assistance with Federal agency subscriptions	**202–523–5243**

What's NEW!

Federal Register Table of Contents via e-mail

Subscribe to FEDREGTOC, to receive the **Federal Register** Table of Contents in your e-mail every day.

If you get the HTML version, you can click directly to any document in the issue.

To subscribe, go to **http://listserv.access.gpo.gov** and select:

Online mailing list archives
FEDREGTOC-L
Join or leave the list

Then follow the instructions.

Printed on recycled paper.

Contents

Federal Register

Vol. 67, No. 22

Friday, February 1, 2002

Agricultural Marketing Service
PROPOSED RULES
Tobacco inspection:
Mandatory grading; producer referenda, 4926–4927

Agriculture Department
See Agricultural Marketing Service
See Animal and Plant Health Inspection Service
See Rural Telephone Bank

Animal and Plant Health Inspection Service
RULES
Importation and exportation of animals and animal products:
Bovine spongiform encephalopathy; disease status change—
Slovakia and Slovenia, 4877–4878
Plant-related quarantine; foreign:
Unshu oranges from Japan, 4873–4877
PROPOSED RULES
Exportation and importation of animals and animal products:
Rinderpest and foot-and-mouth disease; disease status change—
Estonia, 4927–4930

Architectural and Transportation Barriers Compliance Board
NOTICES
Meetings:
Public Rights-of-Way Access Advisory Committee, 4943

Blind or Severely Disabled, Committee for Purchase From People Who Are
See Committee for Purchase From People Who Are Blind or Severely Disabled

Centers for Medicare & Medicaid Services
NOTICES
Agency information collection activities:
Proposed collection; comment request, 4982–4985
Submission for OMB review; comment request, 4985–4988
2451

Coast Guard
RULES
Drawbridge operations:
Iowa and Illinois, 4909
Ports and waterways safety:
St. Croix, U.S. Virgin Islands; security zone, 4911–4913
St. Thomas, U.S. Virgin Islands; security zones, 4909–4911
NOTICES
Bridges:
Vancouver, WA; Vancouver Railroad Bridge across Columbia River; hearing, 5032–5033

Commerce Department
See International Trade Administration
See National Oceanic and Atmospheric Administration

Committee for Purchase From People Who Are Blind or Severely Disabled
NOTICES
Agency information collection activities:
Proposed collection; comment request, 4944
Procurement list; additions and deletions, 4944, 4945

Copyright Office, Library of Congress
NOTICES
Copyright Arbitration Royalty Panels; list of arbitrators, 5000–5001

Customs Service
PROPOSED RULES
Border Release Advanced Screening and Selectivity (BRASS) Program; procedures, 4930–4938

Defense Department
NOTICES
Agency information collection activities:
Proposed collection; comment request, 4948–4949
Submission for OMB review; comment request, 4949

Education Department
NOTICES
Grants and cooperative agreements; availability, etc.:
Elementary and secondary education—
High School Equivalency Program and College Assistance Migrant Program, 4949–4950
Postsecondary education:
Accrediting agencies and State approval agencies for vocational and nurse education institutions; national recognition; comment request, 4950–4952

Employment Standards Administration
NOTICES
Agency information collection activities:
Proposed collection; comment request; correction, 4999
Minimum wages for Federal and federally-assisted construction; general wage determination decisions, 4999–5000

Energy Department
See Federal Energy Regulatory Commission
NOTICES
Grants and cooperative agreements; availability, etc.:
Locomotive emissions reduction and efficiency improvements; research and development, 4952

Environmental Protection Agency
RULES
Pesticides; tolerances in food, animal feeds, and raw agricultural commodities:
Bifenazate, 4913–4922
NOTICES
Agency information collection activities:
Proposed collection; comment request, 4957
Environmental statements; availability, etc.:
Agency statements—
Comment availability, 4957–4958
Weekly receipts, 4959
Meetings:
Environmental Laboratory Advisory Board, 4959–4960

Executive Office of the President
See Presidential Documents

Federal Accounting Standards Advisory Board
NOTICES
Meetings, 4960

Federal Aviation Administration
RULES
Airworthiness directives:
Bell, 4878–4895
Eurocopter France, 4895–4898
Class E airspace, 4898–4899
NOTICES
Advisory circulars; availability, etc.:
Ice contaminated tailplane stall, 5033
Exemption petitions; summary and disposition, 5033, 5034
Reports and guidance documents; availability, etc.:
Designated Alteration Station activities, 5034

Federal Communications Commission
PROPOSED RULES
Digital television stations; table of assignments:
Kansas, 4941
Radio stations; table of assignments:
Alabama, 4941
NOTICES
Agency information collection activities:
Proposed collection; comment request, 4960, 4961
Reporting and recordkeeping requirements, 4961–4962

Federal Deposit Insurance Corporation
NOTICES
Meetings; Sunshine Act, 4962

Federal Energy Regulatory Commission
NOTICES
Applications, hearings, determinations, etc.:
ANR Pipeline Co., 4952–4953
Columbia Gulf Transmission Co., 4953
Enbridge Pipelines (Midla) Inc., 4953–4954
Midwestern Gas Transmission Co., 4954
Reliant Energy Gas Transmission Co., 4954–4955
Transcontinental Gas Pipe Line Corp., 4955
Williams Field Services-Matagorda Offshore Co., LLC, 4955–4956
Williston Basin Interstate Pipeline Co., 4956
Wyoming Interstate Co., Ltd., 4956

Federal Register Office
NOTICES
Public Laws; cumulative list:
107th Congress; First Session, 5037–5040

Federal Reserve System
NOTICES
Banks and bank holding companies:
Change in bank control, 4962
Formations, acquisitions, and mergers, 4962–4963

Federal Trade Commission
RULES
Textile Fiber Products Identification Act:
Natureworks PLA; new generic fiber name and definition, 4901–4904
NOTICES
Prohibited trade practices:
Ely Lilly & Co., 4963–4964

Financial Management Service
See Fiscal Service

Fiscal Service
NOTICES
Surety companies and reinsuring companies; application and renewal fees, 5035

Fish and Wildlife Service
PROPOSED RULES
Rulemaking documents; opportunity to resubmit comments due to interruption of mail service, 4940
NOTICES
Comprehensive conservation plans; availability, etc.:
Great Dismal Swamp National Wildlife Refuge, VA and NC, 4993
Interruption of mail service; opportunity to resubmit comments, 4992–4993
Meetings:
Klamath River Basin Fisheries Task Force, 4994

Food and Drug Administration
RULES
Human drugs:
Prescription drugs; labeling requirements, 4904–4907
NOTICES
Meetings:
Best practices for reducing transfusion errors; public workshop, 4988–4989

General Services Administration
RULES
Federal travel:
Relocation income tax allowance tax tables, 4923–4925

Health and Human Services Department
See Centers for Medicare & Medicaid Services
See Food and Drug Administration
See Substance Abuse and Mental Health Services Administration
NOTICES
Federal claims; interest rates on overdue debts, 4965
Meetings:
Bioethics, President's Council, 4965
Privacy Act:
Systems of records, 4965–4967
Reports and guidance documents; availability, etc.:
Limited English proficient persons; Civil Rights Act Title VI prohibition against national origin discrimination; policy guidance, 4968–4982

Housing and Urban Development Department
NOTICES
Grants and cooperative agreements; availability, etc.:
Facilities to assist homeless—
Excess and surplus Federal property, 4990–4992

Immigration and Naturalization Service
NOTICES
Temporary protected status program designations:
Angola, 4997–4999

Interior Department
See Fish and Wildlife Service
See Land Management Bureau
See National Park Service
NOTICES
Interruption of mail service; opportunity to resubmit comments, 4992–4993

Internal Revenue Service
RULES
Income taxes:
Disqualified person; definition, 4907–4909
PROPOSED RULES
Procedure and administration:
Agent for certain purposes; definition, 4938–4939
NOTICES
Agency information collection activities:
Proposed collection; comment request, 5035–5036

International Trade Administration
NOTICES
Antidumping and countervailing duties:
Administrative review requests, 4945–4947

International Trade Commission
NOTICES
Import investigations:
Individually quick frozen red raspberries from—
Chile, 4994–4995
Polyethylene terephthalate film, sheet, and strip from—
India and Taiwan, 4995–4997

Justice Department
See Immigration and Naturalization Service

Labor Department
See Employment Standards Administration

Land Management Bureau
PROPOSED RULES
Rulemaking documents; opportunity to resubmit comments due to interruption of mail service, 4940
NOTICES
Interruption of mail service; opportunity to resubmit comments, 4992–4993

Library of Congress
See Copyright Office, Library of Congress

National Aeronautics and Space Administration
NOTICES
Meetings:
Advisory Council
Space Science Advisory Committee, 5001

National Oceanic and Atmospheric Administration
NOTICES
Meetings:
Mid-Atlantic Fishery Management Council, 4947
Pacific Fishery Management Council, 4947

National Park Service
NOTICES
Meetings:
Acadia National Park Advisory Commission, 4994

Nuclear Regulatory Commission
NOTICES
Decommissioning plans; sites:
West Valley Demonstration Project and Site, NY, 5003–5012
Environmental statements; availability, etc.:
Florida Power & Light Co., 5012–5013
Meetings:
Medical Uses of Isotopes Advisory Committee, 5013
Applications, hearings, determinations, etc.:
AmerGen Energy Co., LLC, 5001–5002
Exelon Generation Co., LLC, 5002–5003
Tennessee Valley Authority, 5003

Presidential Documents
EXECUTIVE ORDERS
Government agencies and employees:
USA Freedom Corps; establishment (EO 13254), 4869–4871

Public Debt Bureau
See Fiscal Service

Public Health Service
See Food and Drug Administration
See Substance Abuse and Mental Health Services Administration

Research and Special Programs Administration
PROPOSED RULES
Hazardous materials:
Hazardous materials transportation—
Cargo tank motor vehicles; construction and maintenance requirements; correction, 4941–4942

Rural Telephone Bank
NOTICES
Meetings; Sunshine Act, 4943

Securities and Exchange Commission
NOTICES
Investment Company Act of 1940:
Exemption applications—
Memorial Funds et al., 5013–5015
Self-regulatory organizations; proposed rule changes:
American Stock Exchange LLC, 5015–5016
Chicago Board Options Exchange, Inc., 5016–5018
International Securities Exchange LLC, 5018–5019
National Association of Securities Dealers, Inc., 5019–5023
New York Stock Exchange, Inc., 5024–5027
Philadelphia Stock Exchange, Inc., 5027–5029

Social Security Administration
NOTICES
Agency information collection activities:
Reporting and recordkeeping requirements; proposed collection, comment request; and submission for OMB review, comment request, 5029–5031

State Department
NOTICES
Art objects; importation for exhibition:
Central European Avant-Gardes: Exchange and Transformation (1910-1930), 5031
Tapestry in the Renaissance: Art and Magnificence, 5031–5032

Substance Abuse and Mental Health Services Administration
NOTICES
Federal agency urine drug testing; certified laboratories meeting minimum standards, list, 4989–4990

Surface Transportation Board
NOTICES
Rail carriers:
Cost recovery procedures—
Productivity adjustment, 5034–5035

Tennessee Valley Authority
NOTICES
Agency information collection activities:
Proposed collection; comment request, 5032

Transportation Department
See Coast Guard
See Federal Aviation Administration
See Research and Special Programs Administration
See Surface Transportation Board
RULES
Procedural regulations:
Air Transportation Safety and System Stabilization Act; air carriers compensation procedures, 4899–4901

Treasury Department
See Customs Service
See Fiscal Service
See Internal Revenue Service

Veterans Affairs Department
PROPOSED RULES
Board of Veterans Appeals:
Appeals regulations and rules of practice—
Appeal withdrawal procedures; restriction removed, plus clarification, 4939–4940

Separate Parts In This Issue

Part II
Reader Aids, Office of the Federal Register, National Archives and Records Administration, 5037–5040

Reader Aids
Consult the Reader Aids section at the end of this issue for phone numbers, online resources, finding aids, reminders, and notice of recently enacted public laws.
To subscribe to the Federal Register Table of Contents LISTSERV electronic mailing list, go to http://listserv.access.gpo.gov and select Online mailing list archives, FEDREGTOC-L, Join or leave the list (or change settings); then follow the instructions.

CFR PARTS AFFECTED IN THIS ISSUE

A cumulative list of the parts affected this month can be found in the Reader Aids section at the end of this issue.

3 CFR
Executive Orders:
13254 4869
7 CFR
319 4873
Proposed Rules:
29 4926
9 CFR
94 4877
Proposed Rules:
94 4927
14 CFR
39 (3 documents) ...4878, 4895, 4896
71 4898
330 4899
16 CFR
303 4901
19 CFR
Proposed Rules:
24 4930
123 4930
132 4930
142 4930
21 CFR
10 4904
201 4904
250 4904
290 4904
310 4904
329 4904
341 4904
361 4904
369 4904
606 4904
610 4904
26 CFR
1 4907
Proposed Rules:
301 4938
33 CFR
117 4909
165 (2 documents) 4909, 4911
38 CFR
Proposed Rules:
20 4939
40 CFR
180 4913
41 CFR
302–11 4923
43 CFR
Proposed Rules:
3809 4940
47 CFR
Proposed Rules:
73 (2 documents) 4941
49 CFR
Proposed Rules:
107 4941
171 4941
172 4941
173 4941
177 4941
178 4941
180 4941
50 CFR
Proposed Rules:
Ch. I 4940

Federal Register
Vol. 67, No. 22
Friday, February 1, 2002

Presidential Documents

Title 3—

The President

Executive Order 13254 of January 29, 2002

Establishing the USA Freedom Corps

By the authority vested in me as President by the Constitution and the laws of the United States of America, it is hereby ordered as follows:

Section 1. *Policy.* Building on our Nation's rich tradition of citizen service, this Administration's policy is to foster a culture of responsibility, service, and citizenship by promoting, expanding, and enhancing public service opportunities for all Americans and by making these opportunities readily available to citizens from all geographic areas, professions, and walks of life. More specifically, this Administration encourages all Americans to serve their country for the equivalent of at least 2 years (4,000 hours) over their lifetimes. Toward those ends, the executive departments, agencies, and offices constituting the USA Freedom Corps shall coordinate and strengthen Federal and other service opportunities, including opportunities for participation in homeland security preparedness and response, other areas of public and social service, and international service. The executive branch departments, agencies, and offices also will work with State and local governments and private entities to foster and encourage participation in public and social service programs, as appropriate.

Sec. 2. *USA Freedom Corps.* The USA Freedom Corps shall be an interagency initiative, bringing together executive branch departments, agencies, and offices with public service programs and components, including but not limited to programs and components with the following functions:

(i) recruiting, mobilizing, and encouraging all Americans to engage in public service;

(ii) providing concrete opportunities to engage in public service;

(iii) providing the public with access to information about public service opportunities through Federal programs and elsewhere; and

(iv) providing recognition and awards to volunteers and other participants in public service programs.

Sec. 3. *USA Freedom Corps Council.* (a) *Establishment and Mission.* There shall be a USA Freedom Corps Council (Council) chaired by the President and composed of heads of executive branch departments, agencies, and offices, which shall have the following functions:

(i) serving as a forum for Federal officials responsible for public service programs to coordinate and improve public service programs and activities administered by the executive branch;

(ii) working to encourage all Americans to engage in public service, whether through Federal programs or otherwise;

(iii) advising the President and heads of executive branch departments, agencies, and offices concerning the optimization of current Federal programs to enhance public service opportunities;

(iv) coordinating public outreach and publicity of citizen service opportunities provided by Federal programs;

(v) encouraging schools, universities, private public service organizations, and other non-Federal entities to foster and reward public service;

(vi) studying the availability of public service opportunities provided by the Federal Government and elsewhere; and

(vii) tracking progress in participation in public service programs.

(b) *Membership.* In addition to the Chair, the members of the Council shall be the heads of the executive branch departments, agencies, and offices listed below, or their designees, and such other officers of the executive branch as the President may from time to time designate. Every member of the Council or designee shall be a full-time or permanent part-time officer or employee of the Federal Government. Members shall not be compensated for their service on the Council in addition to the salaries they receive as employees or officers of the Federal Government.

(i) Vice President;

(ii) Attorney General;

(iii) Secretary of State;

(iv) Secretary of Health and Human Services;

(v) Secretary of Commerce;

(vi) Secretary of Education;

(vii) Secretary of Veterans Affairs;

(viii) Director of the Federal Emergency Management Agency;

(ix) Chief Executive Officer of the Corporation for National and Community Service;

(x) Director of the Peace Corps;

(xi) Administrator of the United States Agency for International Development;

(xii) Director of the USA Freedom Corps Office; and

(xiii) Director of the Office of Faith-Based and Community Initiatives.

(c) *Chair.* The President shall be the Chair of the USA Freedom Corps Council, and in his absence, the Vice President shall serve as Chair. The Director of the USA Freedom Corps Office may, at the President's direction, preside over meetings of the Council in the President's and Vice President's absence.

(d) *Honorary Co-Chair.* The President may, from time to time, designate an Honorary Co-Chair or Co-Chairs, who shall serve in an advisory role to the Council and to the President on matters considered by the Council. Any Honorary Co-Chair shall be a full-time or permanent part-time employee or officer of the Federal Government.

(e) *Meetings.* The Council shall meet at the President's direction. The Director of the USA Freedom Corps Office shall be responsible, at the President's direction, for determining the agenda, ensuring that necessary papers are prepared, and recording Council actions and Presidential decisions.

(f) *Responsibilities of Executive Branch Departments, Agencies, and Offices.*

(i) Members of the Council shall remain responsible for overseeing the programs administered by their respective departments, agencies, and offices. Each such department, agency, and office will retain its authority and responsibility to administer those programs according to law;

(ii) Each executive branch department, agency, or office with responsibility for programs relating to the functions and missions of the USA Freedom Corps as described in section 2 of this order shall be responsible for identifying those public service opportunities and coordinating with the USA Freedom Corps Council to ensure that such programs are, if appropriate, publicized and encouraged by the Council; and

(iii) Upon the request of the Chair, and to the extent permitted by law, the heads of executive branch departments and agencies shall provide the Council with relevant information.

Sec. 4. *USA Freedom Corps Office.* (a) *General.* The USA Freedom Corps also shall be supported by a USA Freedom Corps Office (Office), which

shall be a component of the White House Office. The USA Freedom Corps Office shall have a Director who shall be appointed by the President. The Director shall be assisted by an appropriate staff within the White House Office.

(b) *Presidential Recognition to Participants in USA Freedom Corps Programs.* In addition to supporting and facilitating the functions of the Council listed in section 3 of this order, the Office shall support the President in providing recognition to volunteers and other participants in programs and activities relating to the functions and missions of the USA Freedom Corps as described in section 2 of this order.

Sec. 5. *General Provisions.* (a) The White House Office shall provide the Council and Office with such funding and administrative support, to the extent permitted by law and subject to the availability of appropriations, as directed by the Chief of Staff to the President to carry out the provisions of this order.

(b) This order does not alter the existing authorities or roles of executive branch departments, agencies, or offices. Nothing in this order shall supersede any requirement made by or under law.

(c) This order does not create any right or benefit, substantive or procedural, enforceable at law or equity, against the United States, its departments, agencies, or other entities, its officers or employees, or any other person.

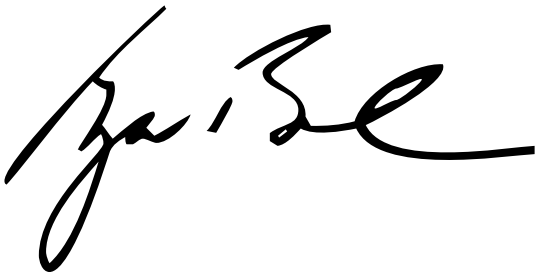

THE WHITE HOUSE,
January 29, 2002.

[FR Doc. 02–2638
Filed 1–31–02; 8:45 am]
Billing code 3195–01–P

Federal Register
Vol. 67, No. 22
Friday, February 1, 2002

Presidential Documents

Title 3—

The President

Executive Order 13254 of January 29, 2002

Establishing the USA Freedom Corps

By the authority vested in me as President by the Constitution and the laws of the United States of America, it is hereby ordered as follows:

Section 1. *Policy.* Building on our Nation's rich tradition of citizen service, this Administration's policy is to foster a culture of responsibility, service, and citizenship by promoting, expanding, and enhancing public service opportunities for all Americans and by making these opportunities readily available to citizens from all geographic areas, professions, and walks of life. More specifically, this Administration encourages all Americans to serve their country for the equivalent of at least 2 years (4,000 hours) over their lifetimes. Toward those ends, the executive departments, agencies, and offices constituting the USA Freedom Corps shall coordinate and strengthen Federal and other service opportunities, including opportunities for participation in homeland security preparedness and response, other areas of public and social service, and international service. The executive branch departments, agencies, and offices also will work with State and local governments and private entities to foster and encourage participation in public and social service programs, as appropriate.

Sec. 2. *USA Freedom Corps.* The USA Freedom Corps shall be an interagency initiative, bringing together executive branch departments, agencies, and offices with public service programs and components, including but not limited to programs and components with the following functions:

(i) recruiting, mobilizing, and encouraging all Americans to engage in public service;

(ii) providing concrete opportunities to engage in public service;

(iii) providing the public with access to information about public service opportunities through Federal programs and elsewhere; and

(iv) providing recognition and awards to volunteers and other participants in public service programs.

Sec. 3. *USA Freedom Corps Council.* (a) *Establishment and Mission.* There shall be a USA Freedom Corps Council (Council) chaired by the President and composed of heads of executive branch departments, agencies, and offices, which shall have the following functions:

(i) serving as a forum for Federal officials responsible for public service programs to coordinate and improve public service programs and activities administered by the executive branch;

(ii) working to encourage all Americans to engage in public service, whether through Federal programs or otherwise;

(iii) advising the President and heads of executive branch departments, agencies, and offices concerning the optimization of current Federal programs to enhance public service opportunities;

(iv) coordinating public outreach and publicity of citizen service opportunities provided by Federal programs;

(v) encouraging schools, universities, private public service organizations, and other non-Federal entities to foster and reward public service;

(vi) studying the availability of public service opportunities provided by the Federal Government and elsewhere; and

(vii) tracking progress in participation in public service programs.

(b) *Membership.* In addition to the Chair, the members of the Council shall be the heads of the executive branch departments, agencies, and offices listed below, or their designees, and such other officers of the executive branch as the President may from time to time designate. Every member of the Council or designee shall be a full-time or permanent part-time officer or employee of the Federal Government. Members shall not be compensated for their service on the Council in addition to the salaries they receive as employees or officers of the Federal Government.

(i) Vice President;

(ii) Attorney General;

(iii) Secretary of State;

(iv) Secretary of Health and Human Services;

(v) Secretary of Commerce;

(vi) Secretary of Education;

(vii) Secretary of Veterans Affairs;

(viii) Director of the Federal Emergency Management Agency;

(ix) Chief Executive Officer of the Corporation for National and Community Service;

(x) Director of the Peace Corps;

(xi) Administrator of the United States Agency for International Development;

(xii) Director of the USA Freedom Corps Office; and

(xiii) Director of the Office of Faith-Based and Community Initiatives.

(c) *Chair.* The President shall be the Chair of the USA Freedom Corps Council, and in his absence, the Vice President shall serve as Chair. The Director of the USA Freedom Corps Office may, at the President's direction, preside over meetings of the Council in the President's and Vice President's absence.

(d) *Honorary Co-Chair.* The President may, from time to time, designate an Honorary Co-Chair or Co-Chairs, who shall serve in an advisory role to the Council and to the President on matters considered by the Council. Any Honorary Co-Chair shall be a full-time or permanent part-time employee or officer of the Federal Government.

(e) *Meetings.* The Council shall meet at the President's direction. The Director of the USA Freedom Corps Office shall be responsible, at the President's direction, for determining the agenda, ensuring that necessary papers are prepared, and recording Council actions and Presidential decisions.

(f) *Responsibilities of Executive Branch Departments, Agencies, and Offices.*

(i) Members of the Council shall remain responsible for overseeing the programs administered by their respective departments, agencies, and offices. Each such department, agency, and office will retain its authority and responsibility to administer those programs according to law;

(ii) Each executive branch department, agency, or office with responsibility for programs relating to the functions and missions of the USA Freedom Corps as described in section 2 of this order shall be responsible for identifying those public service opportunities and coordinating with the USA Freedom Corps Council to ensure that such programs are, if appropriate, publicized and encouraged by the Council; and

(iii) Upon the request of the Chair, and to the extent permitted by law, the heads of executive branch departments and agencies shall provide the Council with relevant information.

Sec. 4. *USA Freedom Corps Office.* (a) *General.* The USA Freedom Corps also shall be supported by a USA Freedom Corps Office (Office), which

shall be a component of the White House Office. The USA Freedom Corps Office shall have a Director who shall be appointed by the President. The Director shall be assisted by an appropriate staff within the White House Office.

(b) *Presidential Recognition to Participants in USA Freedom Corps Programs.* In addition to supporting and facilitating the functions of the Council listed in section 3 of this order, the Office shall support the President in providing recognition to volunteers and other participants in programs and activities relating to the functions and missions of the USA Freedom Corps as described in section 2 of this order.

Sec. 5. *General Provisions.* (a) The White House Office shall provide the Council and Office with such funding and administrative support, to the extent permitted by law and subject to the availability of appropriations, as directed by the Chief of Staff to the President to carry out the provisions of this order.

(b) This order does not alter the existing authorities or roles of executive branch departments, agencies, or offices. Nothing in this order shall supersede any requirement made by or under law.

(c) This order does not create any right or benefit, substantive or procedural, enforceable at law or equity, against the United States, its departments, agencies, or other entities, its officers or employees, or any other person.

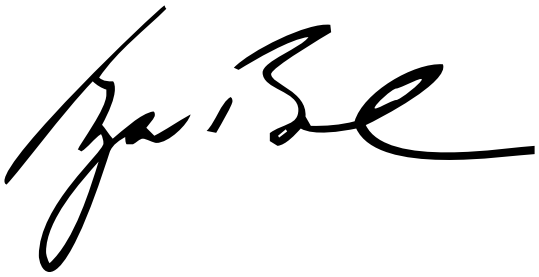

THE WHITE HOUSE,
January 29, 2002.

[FR Doc. 02–2638
Filed 1–31–02; 8:45 am]
Billing code 3195–01–P

Rules and Regulations

Federal Register
Vol. 67, No. 22
Friday, February 1, 2002

This section of the FEDERAL REGISTER contains regulatory documents having general applicability and legal effect, most of which are keyed to and codified in the Code of Federal Regulations, which is published under 50 titles pursuant to 44 U.S.C. 1510.

The Code of Federal Regulations is sold by the Superintendent of Documents. Prices of new books are listed in the first FEDERAL REGISTER issue of each week.

DEPARTMENT OF AGRICULTURE

Animal and Plant Health Inspection Service

7 CFR Part 319

[Docket No. 99–099–2]

RIN 0579–AB17

Importation of Unshu Oranges From Japan

AGENCY: Animal and Plant Health Inspection Service, USDA.

ACTION: Final rule.

SUMMARY: We are amending the regulations governing the importation of citrus fruit to allow, under certain conditions, Unshu oranges grown on Kyushu Island, Japan, to be imported into non-citrus-producing areas of the United States. We are also amending the regulations for importing Unshu oranges from Honshu Island, Japan, by requiring fumigation using methyl bromide prior to exportation and by allowing the fruit to be distributed to additional areas in the United States, including citrus-producing areas. In addition, we are removing the requirement for individually wrapping Unshu oranges imported from Japan or the Republic of Korea. These actions would relieve restrictions on the importation into and distribution within the United States of Unshu oranges without presenting a significant risk of introducing citrus canker or other diseases or pests of plants.

EFFECTIVE DATE: January 28, 2002.

FOR FURTHER INFORMATION CONTACT: Dr. Inder P. Gadh, Import Specialist, Phytosanitary Issues Management Team, PPQ, APHIS, 4700 River Road Unit 140, Riverdale, MD 20737–1236; (301) 734–6799.

SUPPLEMENTARY INFORMATION:

Background

Citrus canker is a disease that affects citrus and is caused by the infectious bacterium *Xanthomonas campestris* pv. *citri* (Hasse) Dye. The strain of citrus canker that occurs in Japan infects twigs, leaves, and fruit in a wide spectrum of citrus species.

Currently, the regulations in 7 CFR 319.28 (referred to below as the regulations) prohibit the importation of citrus from Eastern and Southeastern Asia, Japan, Brazil, Paraguay, and other designated areas, with certain exceptions. One exception is for Unshu oranges (*Citrus reticulata* Blanco var. *unshu,* also known as Satsuma) grown in citrus-canker-free areas of Japan or on Cheju Island, Republic of Korea. After meeting certain growing, packing, and inspection requirements, Unshu oranges may be imported from these areas of Japan and Korea into any area of the United States except American Samoa, Arizona, California, Florida, Louisiana, the Northern Mariana Islands, Puerto Rico, Texas, and the U.S. Virgin Islands. Also, under the regulations in 7 CFR 301.11, the interstate movement of Unshu oranges is prohibited from any State or area into which they may be imported into or through any State or area where importation is prohibited under § 319.28.

Unshu oranges eligible for importation into the United States are grown under a system of safeguards in citrus-canker-free areas in Japan and Korea. Unshu oranges are known to be resistant to citrus canker, and the system of safeguards established in the regulations for Unshu oranges approximately 30 years ago has proven effective, as evidenced by the record of citrus-canker-free imports.

On April 18, 2001, we published in the **Federal Register** (66 FR 19892–19898, Docket No. 99–099–1) a proposed rule to amend regulations governing the importation of citrus fruit to allow, under certain conditions, Unshu oranges grown on Kyushu Island, Japan, to be imported into non-citrus-producing areas of the United States. We also proposed to amend the regulations for importing Unshu oranges from Honshu Island, Japan, by requiring fumigation using methyl bromide prior to exportation and by allowing the fruit to be distributed to additional areas in the United States, including citrus-producing areas. Finally, we proposed to remove the requirement for individually wrapping Unshu oranges imported from Japan or the Republic of Korea.

We solicited comments concerning our proposal for 60 days ending June 18, 2001. We received five comments by that date. These comments were from State agricultural agencies, a citrus growers cooperative, and a university. All of the commenters raised specific concerns regarding the proposed rule. Those concerns are discussed below by topic.

Two commenters opposed allowing Unshu oranges from Japan to enter citrus-producing areas of the United States under any conditions due to the risk of citrus canker. One of the commenters argued that fruit treatments and growing area inspections have not been conclusively proven to eliminate that risk. We believe that the risk of citrus canker being introduced into citrus-producing areas via imported Unshu oranges is almost nonexistent. The pest risk assessment estimated that the probability of the citrus canker bacterium (*Xanthomonas campestris* pv. *citri*) from imported Unshu orange fruits coming in contact with and infecting a suitable host material and establishing was nearly zero. The published literature indicates that no authenticated outbreak of citrus canker has ever been traced back to the importation of infected fruit. In addition, the Unshu oranges are known for their resistance to the disease.

Three commenters opposed removing the requirement to wrap individual oranges, especially given some Unshu oranges from Japan would be allowed into citrus-producing areas and others would not. These commenters argued that once cartons are opened and fruit distributed, it would be difficult to identify the origin of individual oranges. As we noted in the proposed rule, we will continue to require that each box containing fruit will have to be clearly marked with the States into which the fruit may be imported, and from which they are prohibited removal under a Federal plant quarantine. Our experience has shown that Unshu oranges are marketed and retailed by the box. We do not think that wrapping of individual fruits with tissue paper provides additional phytosanitary security; any importers engaged in swapping boxes to misrepresent the

origin (i.e., Kyushu-grown oranges in Honshu boxes) could also engage in swapping or fabricating wrapping papers.

Three commenters suggested that methyl bromide fumigation should be required for all Unshu oranges entering the United States from Japan, not just for Unshu oranges grown on Honshu. One of these commenters argued that three mealybugs identified in the pest risk assessment (*Planococcus kraunhiae, P. lilacinus,* and *Pseudococcus cryptus*) have a relatively wide host range and could move from imported Unshu oranges to other host material and become established in the United States. APHIS' fumigation requirement for the oranges grown on Honshu is an additional protective measure imposed because the Honshu-grown fruit can be distributed in U.S. citrus-producing areas. Because the distribution of Kyushu-grown fruit will be limited to non-citrus-producing areas, we believe that the existing safeguards will be sufficient. During the required inspections by APHIS personnel in Japan and at the U.S. port of entry, APHIS inspectors specifically target mealybugs; any shipments of Unshu oranges from Kyushu or Honshu found to be infested with mealybugs (or any other quarantine significant pest) will be prohibited entry into the United States.

Two commenters suggested that APHIS should update the 1995 pest risk assessment ''Importation of Japanese Unshu Orange Fruit into Citrus Producing States,'' given the age of the document and the fact that Japan's work plan for the Unshu orange program does not refer to some of the pests identified as quarantine significant (e.g., the citrus fruit fly) in the pest risk assessment. We believe that the 1995 risk assessment is still applicable, given that no incidence of citrus canker or finding of a new pest of concern in the Japanese production areas has been reported or recorded since the assessment was prepared. With regard to Japan's work plan, it has not been necessary for that document to address the citrus fruit fly because that pest is not known to occur on Honshu, which has been the only area from which Unshu oranges could be imported into the United States. We will work with Japanese officials to ensure that the programmatic changes resulting from this rule are reflected in an updated work plan.

Two commenters suggested that the risks presented by citrus canker and citrus greening would require that minimal acceptable growing and domestic movement standards within Japan be the same as those imposed on Florida for movement of commercial citrus. Citrus greening disease and its vector, *Diaphorina citri,* are reported as occurring only in the Ryuku Archipelago in Japan and have not been reported on Honshu or Kyushu. While *D. citri* was detected in southeastern Florida in June 1998—the only reported detection of the pest in the United States—populations of the pest are being controlled through a classical biological control program, according to a pest alert prepared by the University of Florida and the Florida Department of Agriculture and Consumer Services, Division of Plant Industry. Further, *D. citri* breeds exclusively on young flush and feeds on leaves and shoots of citrus, and the citrus greening bacterium is phloem restricted, making the fruit an unlikely pathway for the vector or the disease. With regard to citrus canker, we have noted in this document and elsewhere that Unshu oranges themselves are highly resistant to citrus canker and the required growing conditions in Japan all but eliminate the risk of citrus canker being introduced via Unshu oranges from Japan.

Therefore, for the reasons given in the proposed rule and in this document, we are adopting the proposed rule as a final rule, without change.

Effective Date

This is a substantive rule that relieves restrictions and, pursuant to the provisions of 5 U.S.C. 553, may be made effective less than 30 days after publication in the **Federal Register**.

Immediate implementation of this rule is necessary to provide relief to those persons who are adversely affected by restrictions we no longer find warranted. The shipping season for Unshu oranges from Japan is in progress. Making this rule effective immediately will allow interested producers and others in the marketing chain to benefit during this year's shipping season. Therefore, the Administrator of the Animal and Plant Health Inspection Service has determined that this rule should be effective upon signature.

Executive Order 12866 and Regulatory Flexibility Act

This final rule has been reviewed under Executive Order 12866. The rule has been determined to be not significant for the purposes of Executive Order 12866 and, therefore, has not been reviewed by the Office of Management and Budget.

The economic analysis for the changes in this document is set forth below. It provides a cost-benefit analysis as required by Executive Order 12866 and an analysis of the potential economic effects on small entities as required by the Regulatory Flexibility Act.

In the data used to prepare this analysis, the terms ''tangerine'' and ''mandarin'' are generally interchangeable. Both refer to varieties of *Citrus reticulata*. For example, National Agricultural Statistics Service (NASS) production data are aggregated under ''tangerine,'' while Census Bureau trade data use the term ''mandarin.'' Because of its familiarity, we use only the term ''tangerine'' in this analysis.

Unshu oranges (*Citrus reticulata* var. *unshu*) are a variety of tangerine currently allowed to be imported into the United States from citrus canker-free production areas of Japan and Korea. They may be imported into any part of the United States except for commercial citrus-producing areas. This rule amends the provisions regarding the importation of Unshu oranges from Honshu Island, where all such shipments from Japan originated prior to this rule, and allow importations from four prefectures on Kyushu Island. Unshu oranges imported from Honshu Island will no longer be prohibited from being distributed in five citrus-producing States (Arizona, California, Florida, Louisiana, and Texas), and postharvest treatment with methyl bromide will be mandatory. Unshu oranges from Kyushu Island will be prohibited from being distributed in those five citrus-producing States, American Samoa, the Northern Mariana Islands, Puerto Rico, and the U.S. Virgin Islands, and methyl bromide treatment will not be mandatory. This rule also removes the requirement that imported Unshu oranges be individually wrapped, regardless of whether they come from Japan or Korea.

Because Unshu oranges are not grown in the United States, entities that might be affected by this rule will be producers of other tangerine varieties, assuming Unshu oranges can be considered a substitute fruit. Annual receipts of $750,000 or less is the small-entity criterion set by the Small Business Administration for establishments primarily engaged in the production of citrus fruits. Most tangerine producers in the United States are small entities. Although the *1997 Census of Agriculture* excluded information on California's ''honey tangerine'' growers to avoid disclosing data for individual farms, the information that is available for ''other tangerine'' growers in California and other States indicates that most operations are small.

Quantities of Unshu oranges imported from Japan and Korea between 1994 and 1999 are shown in Table 1. Unshu orange imports from Japan between 1994 and 1999 averaged 240 metric tons per year.

TABLE 1—UNSHU ORANGE IMPORTS BY THE UNITED STATES FROM JAPAN AND KOREA

[In metric tons]

Year	Japan	Korea	Total
1994	324	.....	324
1995	232	43	275
1996	165	214	379
1997	144	887	1,031
1998	224	31	255
1999	349	377	726

Source: Ministry of Agriculture, Forestry and Fisheries, Japan.

Japan's Ministry of Agriculture, Forestry and Fisheries is unable to project future Unshu orange exports to the United States that may result from this final rule. For the purposes of this analysis, therefore, we estimated that the level of imports would be double the 1994–1999 average, i.e., 480 metric tons per year. Adding to this amount the average of yearly imports from Korea shown in Table 1, namely, 310 metric tons, would mean 790 metric tons of Unshu oranges imported annually. The estimated increase in imports from Japan may be too high, but we do not have information that would allow a more factually based projection. A high estimate of the potential increase in Japan's Unshu orange exports to the United States lends confidence to our conclusion regarding the potential economic effect on U.S. tangerine producers.

U.S. tangerine production, imports, and domestic supplies are shown in Table 2. U.S. net imports were less than 4 percent of the domestic supply in 1997–98. In addition, as Table 2 shows, the United States shifted from being a net exporter from 1994 through 1996 to being a net importer of tangerines beginning in 1996, reflecting increased demand for imported varieties. Annual exports from 1994 through 1998 were fairly constant at about 33,400 metric tons. Imports, however, increased sharply, from about 20,000 metric tons in 1994–95, to about 42,800 metric tons in 1997–98.

TABLE 2—U.S. FRESH TANGERINE PRODUCTION AND IMPORTATION

[In metric tons]

Year	U.S. production [1]	Net imports [2]	Domestic supply [3]
1994–95	190,046	−13,794	176,251
1995–96	220,985	−9,477	211,508
1996–97	255,020	1,742	256,762
1997–98	220,878	8,848	229,726

[1] Excludes processed fruit. Source: Production data from NASS, *Agricultural Statistics,* Tables 5–23 and 5–24.

[2] "Net imports" are imports minus exports. Calendar year data arranged to correspond to NASS cross-year production data. Net import data source: *World Trade Atlas,* Global Trade Information Services, Inc., based on data from U.S. Department of Commerce, Bureau of the Census.

[3] U.S. production (excluding processed fruit) plus net imports.

Comparing Unshu orange imports shown in Table 1 with U.S. tangerine supplies shown in Table 2, it is apparent that Unshu orange imports comprise a small portion of total supply. From 1994–95 to 1997–98, they averaged only 0.23 percent of U.S. tangerine supply, and when only the fruit imported from Japan is considered, 0.11 percent. The hypothesized import level, 790 metric tons a year, represents only 0.36 percent of the average annual tangerine domestic supply over this 4-year period. This very small percentage suggests that any effect of Unshu orange imports, as a substitute fruit, on the sales and prices of other tangerine varieties as a whole would not be significant.

One seedless variety that is similar to the Unshu orange is the Satsuma. In the United States, it is commercially grown only in California, where there were 1,368 acres of bearing and 753 acres of nonbearing (young) trees as of May 1999, according to the California Department of Food and Agriculture. Satsuma production statistics are not recorded at the national or State level. Nearly all commercial production takes place in Fresno, Kern, and Tulare Counties, CA. Of these, only Fresno County maintains information specific to Satsumas. In 1997–98, there were 2,332 metric tons of Satsuma produced on 470 acres in Fresno County. Based on those production levels, we estimate that the entire area of California planted with Satsuma annually produces 6,785 metric tons of fruit and could potentially produce 10,520 metric tons of fruit. The hypothesized quantity of Unshu orange imports, 790 metric tons, represents 11.6 and 7.5 percent, respectively, of the estimated California Satsuma production levels (i.e., the estimated annual production and estimated potential production levels).

Direct access to California markets will allow Unshu orange imports from Honshu Island to compete more directly for California's Satsuma consumers. However, prices of the two varieties are not competitive. Wholesale prices for Satsuma in 1997–98 were about 40 to 50 cents per pound. Wholesale prices for Unshu oranges for the past 6 to 7 years have been around $1.40 to $1.50 per pound ($45 to $48 per 32-pound container). One company has been the sole importer of Unshu oranges from Japan for more than 10 years. Information from the U.S. Department of Commerce, Bureau of the Census, shows that the average price of all tangerines imported by the United States from 1994 to 1998 was more in line with Satsuma prices, at about 47 cents per pound. A price difference of this magnitude implies distinct markets; it is highly unlikely that Satsuma customers will be willing to pay a threefold premium for a substitute variety. There may be latent demand for Unshu oranges in the United States, but the extent to which this demand draws away consumers of Satsuma and other domestic tangerine varieties is expected to be marginal. More likely, Unshu orange sales in citrus-producing States and elsewhere will be to an expanding base of niche customers willing to pay the premium price for Unshu oranges.

The effect on the demand for other *Citrus reticulata* varieties from increased levels of Unshu orange imports is expected to be negligible. Even when the analysis focuses more narrowly on a similar tangerine variety, the Satsuma, the higher prices paid for Unshu oranges strongly indicate a distinct market, with any effect on Satsuma sales likely to be insignificant.

An increase in the importation of Unshu oranges is expected, given the addition of Unshu oranges grown on Kyushu Island and the opportunity for Unshu oranges from Honshu Island to be marketed in U.S. citrus-producing States. The requirement that shipments from Honshu Island be fumigated using methyl bromide will not affect the volume of Unshu oranges exported, since all shipments from that island are already fumigated voluntarily. Whether the fruit continues to be wrapped after individual fruit wrappers are no longer required will probably be determined largely by customer preference.

As explained, increases in the quantity of Unshu oranges imported from Japan are not expected to have a significant economic effect on U.S. tangerine producers, whether the producer is a small or large entity.

Cost-Benefit Analysis and Analysis of Alternatives

Economic effects on U.S. producers and consumers resulting from this rule are expected to be insignificant. As described, projected Unshu orange imports represent about one-third of 1 percent of domestic tangerine supply. This small amount is unlikely to affect the demand for other tangerines, especially given that Unshu orange prices are triple those of other tangerines. U.S. retailers and consumers of Unshu oranges will benefit, particularly those in citrus-producing States that currently do not have direct access to them.

Alternatives to this rule would be to either maintain existing import regulations or propose restrictions different from those set forth here. The risk assessment supports neither alternative. Japanese sources and U.S. destinations can be expanded without jeopardizing the U.S. citrus industry. The economic effect will be positive, but very minor.

Under these circumstances, the Administrator of the Animal and Plant Health Inspection Service has determined that this action would not have a significant economic impact on a substantial number of small entities.

Executive Order 12988

This final rule allows Unshu oranges to be imported into the United States from Japan. State and local laws and regulations regarding Unshu oranges imported under this rule will be preempted while the fruit is in foreign commerce. Fresh Unshu oranges are generally imported for immediate distribution and sale to the consuming public, and remain in foreign commerce until sold to the ultimate consumer. The question of when foreign commerce ceases in other cases must be addressed on a case-by-case basis. No retroactive effect will be given to this rule, and this rule will not require administrative proceedings before parties may file suit in court challenging this rule.

National Environmental Policy Act

An environmental assessment and finding of no significant impact have been prepared for this final rule. The assessment provides a basis for the conclusion that the importation of Unshu oranges grown at approved locations in Japan and imported into certain areas of the United States under the conditions specified in this final rule will not present a risk of introducing or disseminating citrus canker, citrus fruit fly, and mealybugs and will not have a significant impact on the quality of the human environment. Based on the finding of no significant impact, the Administrator of the Animal and Plant Health Inspection Service has determined that an environmental impact statement need not be prepared.

The environmental assessment and finding of no significant impact were prepared in accordance with: (1) The National Environmental Policy Act of 1969 (NEPA), as amended (42 U.S.C. 4321 *et seq.*), (2) regulations of the Council on Environmental Quality for implementing the procedural provisions of NEPA (40 CFR parts 1500–1508), (3) USDA regulations implementing NEPA (7 CFR part 1b), and (4) APHIS' NEPA Implementing Procedures (7 CFR part 372).

Copies of the environmental assessment and finding of no significant impact are available for public inspection at USDA, room 1141, South Building, 14th Street and Independence Avenue SW., Washington, DC, between 8 a.m. and 4:30 p.m., Monday through Friday, except holidays. Persons wishing to inspect copies are requested to call ahead on (202) 690–2817 to facilitate entry into the reading room. In addition, copies may be obtained by writing to the individual listed under **FOR FURTHER INFORMATION CONTACT**.

Paperwork Reduction Act

In accordance with the Paperwork Reduction Act of 1995 (44 U.S.C. 3501 *et seq.*), the information collection or recordkeeping requirements included in this rule have been approved by the Office of Management and Budget (OMB) under OMB control number 0579–0173.

List of Subjects in 7 CFR Part 319

Bees, Coffee, Cotton, Fruits, Honey, Imports, Logs, Nursery Stock, Plant diseases and pests, Quarantine, Reporting and recordkeeping requirements, Rice, Vegetables.

Accordingly, we are amending 7 CFR part 319 as follows:

PART 319—FOREIGN QUARANTINE NOTICES

1. The authority citation for part 319 continues to read as follows:

Authority: 7 U.S.C. 166, 450, 7711–7714, 7718, 7731, 7732, and 7751–7754; 21 U.S.C. 136 and 136a; 7 CFR 2.22, 2.80, and 371.3.

2. Section 319.28 is amended as follows:

a. Paragraphs (b)(2), (b)(3), (b)(4), and (b)(6) are redesignated as paragraphs (b)(3), (b)(4), (b)(6), and (b)(7), respectively.

b. Paragraph (b) introductory text is revised, paragraph (b)(5) is added, and newly redesignated paragraphs (b)(6)(i) and (b)(7) are revised.

c. New paragraph (b)(2) is added.

§ 319.28 Notice of quarantine.

* * * * *

(b) The prohibition does not apply to Unshu oranges (*Citrus reticulata* Blanco var. *unshu,* Swingle [Citrus unshiu Marcovitch, Tanaka]), also known as Satsuma, grown in Japan or on Cheju Island, Republic of Korea, and imported under permit into any area of the United States except for those areas specified in paragraph (b)(7) of this section: *Provided*, that each of the following safeguards is fully carried out:

* * * * *

(2) In Unshu orange export areas and buffer zones on Kyushu Island, Japan, trapping for the citrus fruit fly (*Bactrocera tsuneonis*) must be conducted as prescribed by the Japanese Government's Ministry of Agriculture, Forestry and Fisheries and the U.S. Department of Agriculture. If fruit flies are detected, then shipping will be suspended from the export area until negative trapping shows the problem has been resolved.

* * * * *

(5) Each shipment of oranges grown on Honshu Island, Japan, must be fumigated with methyl bromide after harvest and prior to exportation to the United States. Fumigation must be at the rate of 3 lbs./1,000 cu. ft. for 2 hours at 59 °F or above at normal atmospheric pressure (chamber only) with a load factor of 32 percent or below.

(6) * * *

(i) The individual boxes in which the oranges are shipped must be stamped or printed with a statement specifying the States into which the Unshu oranges may be imported, and from which they are prohibited removal under a Federal plant quarantine.

* * * * *

(7) The Unshu oranges may be imported into the United States only through a port of entry listed in § 319.37–14, except as follows:

(i) Unshu oranges from Honshu Island, Japan, may not be imported into American Samoa, the Northern Mariana Islands, Puerto Rico, or the U.S. Virgin Islands.

(ii) Unshu oranges from Kyushu Island, Japan (Prefectures of Fukuoka, Kumanmoto, Nagasaki, and Saga only), or Cheju Island, Republic of Korea, may not be imported into American Samoa, Arizona, California, Florida, Hawaii, Louisiana, the Northern Mariana

Islands, Puerto Rico, Texas, or the U.S. Virgin Islands.

* * * * *

Done in Washington, DC, this 28th day of January 2002.

W. Ron DeHaven,

Acting Administrator, Animal and Plant Health Inspection Service.

[FR Doc. 02–2492 Filed 1–31–02; 8:45 am]

BILLING CODE 3410–34–P

DEPARTMENT OF AGRICULTURE

Animal and Plant Health Inspection Service

9 CFR Part 94

[Docket No. 01–122–1]

Change in Disease Status of Slovakia and Slovenia Because of BSE

AGENCY: Animal and Plant Health Inspection Service, USDA.

ACTION: Interim rule and request for comments.

SUMMARY: We are amending the regulations by adding Slovakia and Slovenia to the list of regions where bovine spongiform encephalopathy exists because the disease has been detected in native-born animals in those regions. Slovakia and Slovenia are currently listed among the regions that present an undue risk of introducing bovine spongiform encephalopathy into the United States. Therefore, the effect of this action is a continued restriction on the importation of ruminants that have been in Slovakia or Slovenia and meat, meat products, and certain other products of ruminants that have been in either of those countries. This action is necessary in order to update the disease status of Slovakia and Slovenia regarding bovine spongiform encephalopathy.

DATES: This interim rule is effective February 1, 2002. We invite you to comment on this docket. We will consider all comments we receive that are postmarked, delivered, or e-mailed by April 2, 2002.

ADDRESSES: You may submit comments by postal mail/commercial delivery or by e-mail. If you use postal mail/commercial delivery, please send four copies of your comment (an original and three copies) to: Docket No. 01–122–1, Regulatory Analysis and Development, PPD, APHIS, Station 3C71, 4700 River Road Unit 118, Riverdale, MD 20737–1238. Please state that your comment refers to Docket No. 01–122–1. If you use e-mail, address your comment to *regulations@aphis.usda.gov.* Your comment must be contained in the body of your message; do not send attached files. Please include your name and address in your message and ''Docket No. 01–122–1'' on the subject line.

You may read any comments that we receive on this docket in our reading room. The reading room is located in room 1141 of the USDA South Building, 14th Street and Independence Avenue SW., Washington, DC. Normal reading room hours are 8 a.m. to 4:30 p.m., Monday through Friday, except holidays. To be sure someone is there to help you, please call (202) 690–2817 before coming.

APHIS documents published in the **Federal Register**, and related information, including the names of organizations and individuals who have commented on APHIS dockets, are available on the Internet at http://www.aphis.usda.gov/ppd/rad/webrepor.html.

FOR FURTHER INFORMATION CONTACT: Dr. Gary Colgrove, Chief Staff Veterinarian, Sanitary Issues Management Staff, National Center for Import and Export, VS, APHIS, 4700 River Road Unit 38, Riverdale, MD 20737–1231; (301) 734–4356.

SUPPLEMENTARY INFORMATION:

Background

The regulations in 9 CFR parts 93, 94, 95, and 96 (referred to below as the regulations) govern the importation of certain animals, birds, poultry, meat, other animal products and byproducts, hay, and straw into the United States in order to prevent the introduction of various animal diseases, including bovine spongiform encephalopathy (BSE).

BSE is a neurological disease of cattle and is not known to exist in the United States. It appears that BSE is primarily spread through the use of ruminant feed containing protein and other products from ruminants infected with BSE. Therefore, BSE could become established in the United States if materials carrying the BSE agent, such as certain meat, animal products, and animal byproducts from ruminants, are imported into the United States and are fed to ruminants in the United States. BSE could also become established in the United States if ruminants with BSE are imported into the United States.

Sections 94.18, 95.4, and 96.2 of the regulations prohibit or restrict the importation of certain meat and other animal products and byproducts from ruminants that have been in regions in which BSE exists or in which there is an undue risk of introducing BSE into the United States.

Paragraph (a)(1) of § 94.18 lists the regions in which BSE exists. Paragraph (a)(2) lists the regions that present an undue risk of introducing BSE into the United States because their import requirements are less restrictive than those that would be acceptable for import into the United States and/or because the regions have inadequate surveillance. Paragraph (b) of § 94.18 prohibits the importation of fresh, frozen, and chilled meat, meat products, and most other edible products of ruminants that have been in any region listed in paragraphs (a)(1) or (a)(2). Paragraph (c) of § 94.18 restricts the importation of gelatin derived from ruminants that have been in any of these regions. Section 95.4 prohibits or restricts the importation of certain byproducts from ruminants that have been in any of those regions, and § 96.2 prohibits the importation of casings, except stomach casings, from ruminants that have been in any of these regions. Additionally, the regulations in 9 CFR part 93 pertaining to the importation of live animals provide that the Animal and Plant Health Inspection Service may deny the importation of ruminants from regions where a communicable disease such as BSE exists and from regions that present risks of introducing communicable diseases into the United States (see § 93.404(a)(3)).

Currently, Slovakia and Slovenia are among the regions listed in § 94.18(a)(2), which are regions that present an undue risk of introducing BSE into the United States. (Slovakia is currently listed in § 94.18(a)(2) as ''the Slovak Republic.'') However, on October 5, 2001, a case of BSE was confirmed in a native-born animal in Slovakia. A case of BSE was confirmed in a native-born animal in Slovenia on November 21, 2001. Therefore, in order to update the disease status of these regions regarding BSE, we are amending the regulations by removing Slovakia and Slovenia from the list in § 94.18(a)(2) of regions that present an undue risk of introducing BSE into the United States and adding Slovakia and Slovenia to the list in § 94.18(a)(1) of regions where BSE is known to exist. The effect of this action is a continued restriction on the importation of ruminants that have been in Slovakia or Slovenia and on the importation of meat, meat products, and certain other products and byproducts of ruminants that have been in either of those countries.

Miscellaneous

As noted above, the regulations in § 94.18(a)(2) have referred to Slovakia

by its conventional long form name, the Slovak Republic. For consistency with the manner in which we refer to other countries in the regulations, we use the conventional short form designation of ''Slovakia'' in this interim rule.

Emergency Action

This rulemaking is necessary on an emergency basis to update the disease status of Slovakia and Slovenia regarding BSE. Under these circumstances, the Administrator has determined that prior notice and opportunity for public comment are contrary to the public interest and that there is good cause under 5 U.S.C. 553 for making this rule effective less than 30 days after publication in the **Federal Register**.

We will consider comments we receive during the comment period for this interim rule (see **DATES** above). After the comment period closes, we will publish another document in the **Federal Register**. The document will include a discussion of any comments we receive and any amendments we are making to the rule as a result of the comments.

Executive Order 12866 and Regulatory Flexibility Act

This rule has been reviewed under Executive Order 12866. For this action, the Office of Management and Budget has waived its review process required by Executive Order 12866.

We are amending the regulations by adding Slovakia and Slovenia to the list of regions where BSE exists because the disease has been detected in native-born animals in those regions. Slovakia and Slovenia are currently listed among the regions that present an undue risk of introducing BSE into the United States. Regardless of which of the two lists a region is on, the same restrictions apply to the importation of ruminants and meat, meat products, and most other products and byproducts of ruminants that have been in the region. Therefore, this action, which is necessary in order to update the disease status of Slovakia and Slovenia regarding BSE, will not result in any change in the restrictions that apply to the importation of ruminants and meat, meat products, and certain other products and byproducts of ruminants that have been in Slovakia and Slovenia.

Under these circumstances, the Administrator of the Animal and Plant Health Inspection Service has determined that this action will not have a significant economic impact on a substantial number of small entities.

Executive Order 12988

This rule has been reviewed under Executive Order 12988, Civil Justice Reform. This rule: (1) Preempts all State and local laws and regulations that are inconsistent with this rule; (2) has no retroactive effect; and (3) does not require administrative proceedings before parties may file suit in court challenging this rule.

Paperwork Reduction Act

This interim rule contains no information collection or recordkeeping requirements under the Paperwork Reduction Act of 1995 (44 U.S.C. 3501 *et seq.*).

List of Subjects in 9 CFR Part 94

Animal diseases, Imports, Livestock, Meat and meat products, Milk, Poultry and poultry products, Reporting and recordkeeping requirements.

Accordingly, we are amending 9 CFR part 94 as follows:

PART 94—RINDERPEST, FOOT-AND-MOUTH DISEASE, FOWL PEST (FOWL PLAGUE), EXOTIC NEWCASTLE DISEASE, AFRICAN SWINE FEVER, HOG CHOLERA, AND BOVINE SPONGIFORM ENCEPHALOPATHY: PROHIBITED AND RESTRICTED IMPORTATIONS

1. The authority citation for part 94 continues to read as follows:

Authority: 7 U.S.C. 450, 7711, 7712, 7713, 7714, 7751, and 7754; 19 U.S.C. 1306; 21 U.S.C. 111, 114a, 134a, 134b, 134c, 134f, 136, and 136a; 31 U.S.C. 9701; 42 U.S.C. 4331 and 4332; 7 CFR 2.22, 2.80, and 371.4.

§ 94.18 [Amended]

2. Section 94.18 is amended as follows:

a. In paragraph (a)(1), by adding, in alphabetical order, the words ''Slovakia, Slovenia,''.

b. In paragraph (a)(2), by removing the words ''the Slovak Republic, Slovenia,''.

Done in Washington, DC, this 28th day of January 2002.

W. Ron DeHaven,

Acting Administrator, Animal and Plant Health Inspection Service.

[FR Doc. 02–2494 Filed 1–31–02; 8:45 am]

BILLING CODE 3410–34–U

DEPARTMENT OF TRANSPORTATION

Federal Aviation Administration

14 CFR Part 39

[Docket No. 2001–SW–14–AD; Amendment 39–12628; AD 2002–01–31]

RIN 2120–AA64

Airworthiness Directives; Model HH–1K, TH–1F, TH–1L, UH–1A, UH–1B, UH–1E, UH–1F, UH–1H, UH–1L, UH–1P, and Southwest Florida Aviation Model SW204, SW204HP, SW205, and SW205A–1 Helicopters, Manufactured by Bell Helicopter Textron, Inc. for the Armed Forces of the United States

AGENCY: Federal Aviation Administration, DOT.

ACTION: Final rule.

SUMMARY: This amendment supersedes an existing airworthiness directive (AD) that applies to Model HH–1K, TH–1F, TH–1L, UH–1A, UH–1B, UH–1E, UH–1F, UH–1H, UH–1L, UH–1P, and Southwest Florida Aviation Model SW204, SW204HP, SW205, and SW205A–1 helicopters, manufactured by Bell Helicopter Textron, Inc. (BHTI) for the Armed Forces of the United States. That AD currently requires establishing retirement lives for certain main rotor masts, creating a component history card or equivalent record, and identifying and replacing any unairworthy masts. That AD also contains certain requirements regarding the hub spring, conducting inspections based on the retirement index number (RIN), and sending information to the FAA. This AD contains the same requirements but would establish a retirement life for the main rotor trunnion (trunnion) based on monitoring the number of torque events and flight hours rather than flight hours only as currently required. This AD also adds a note clarifying that the mast serial number (S/N) is defined by 5 or fewer digits plus various prefixes. This amendment is prompted by the determination that monitoring the number of torque events and flight hours for the trunnion is more accurate than by monitoring flight hours only to establish a retirement life. The actions specified by this AD are intended to prevent failure of a mast or trunnion, separation of the main rotor system, and subsequent loss of control of the helicopter.

EFFECTIVE DATE: March 8, 2002.

FOR FURTHER INFORMATION CONTACT: Michael Kohner, Aviation Safety Engineer, FAA, Rotorcraft Directorate, Rotorcraft Certification Office, Fort

Worth, Texas 76193–0170, telephone (817) 222–5447, fax (817) 222–5783.

SUPPLEMENTARY INFORMATION: A proposal to amend 14 CFR part 39 by superseding AD 2000–22–51, Amendment 39–12034 (65 FR 77263, December 11, 2000), which applies to Model HH–1K, TH–1F, TH–1L, UH–1A, UH–1B, UH–1E, UH–1F, UH–1H, UH–1L, UH–1P, and Southwest Florida Aviation Model SW204, SW204HP, SW205, and SW205A–1 helicopters, manufactured by BHTI for the Armed Forces of the United States, was published in the **Federal Register** on September 21, 2001 (66 FR 48631). In addition to retaining several of the requirements of AD 2000–22–51, that action proposed establishing a retirement life for the trunnions based on monitoring the number of torque events and flight hours. Also proposed was adding a note clarifying that the mast S/N is defined by 5 or fewer digits plus various prefixes.

Interested persons have been afforded an opportunity to participate in the making of this amendment. Due consideration has been given to the comment received.

The one commenter states that when the details in paragraphs (a)(2)(i) and (b)(2)(i) of the AD are unavailable for a particular component but the total time-in-service (TIS) is known, he suggests that the worst possible combination for RIN and TIS count should be applied and recorded and the FAA should not require that the component be removed from service. The FAA does not concur. Even assuming the worst case scenario proposed by the commenter would not necessarily provide an appropriate safety margin. The helicopter model installation history and the hours TIS are required to ensure that the mast or trunnion has not been installed on any ineligible helicopter. Masts purchased from the U.S. military should have the part records with the helicopter model installation history and hours TIS.

The FAA has determined that air safety and the public interest require the adoption of the rule as proposed except that an editorial change has been made to the reporting requirements information, paragraph (9) of the AD. The FAA has determined that this change neither increases the economic burden on any operator nor increases the scope of the AD.

The FAA estimates that this AD will affect 75 helicopters of U.S. registry. The FAA also estimates that it will take 10 work hours to replace the trunnion, 2 work hours per helicopter to create a new component history card or equivalent record for the trunnions and that the average labor rate is $60 per work hour. Required trunnions will cost approximately $5,300 per helicopter. Based on these figures, the total cost impact of this AD on U.S. operators is estimated to be $451,500.

The regulations adopted herein will not have a substantial direct effect on the States, on the relationship between the national Government and the States, or on the distribution of power and responsibilities among the various levels of government. Therefore, it is determined that this final rule does not have federalism implications under Executive Order 13132.

For the reasons discussed above, I certify that this action (1) is not a ''significant regulatory action'' under Executive Order 12866; (2) is not a ''significant rule'' under DOT Regulatory Policies and Procedures (44 FR 11034, February 26, 1979); and (3) will not have a significant economic impact, positive or negative, on a substantial number of small entities under the criteria of the Regulatory Flexibility Act. A final evaluation has been prepared for this action and it is contained in the Rules Docket. A copy of it may be obtained from the Rules Docket at the FAA, Office of the Regional Counsel, Southwest Region, 2601 Meacham Blvd., Room 663, Fort Worth, Texas.

List of Subjects in 14 CFR Part 39

Air transportation, Aircraft, Aviation safety, Safety.

Adoption of the Amendment

Accordingly, pursuant to the authority delegated to me by the Administrator, the Federal Aviation Administration amends part 39 of the Federal Aviation Regulations (14 CFR part 39) as follows:

PART 39—AIRWORTHINESS DIRECTIVES

1. The authority citation for part 39 continues to read as follows:

Authority: 49 U.S.C. 106(g), 40113, 44701.

§ 39.13 [Amended]

2. Section 39.13 is amended by removing Amendment 39–12034 (65 FR 77263, December 11, 2000), and by adding a new airworthiness directive (AD), Amendment 39–12628, to read as follows:

2002–01–31 Arrow Falcon Exporters, Inc. (Previously Utah State University); Firefly Aviation Helicopter Services (Previously Erickson Air-crane Co.); Garlick Helicopters, Inc.; Hawkins and Powers Aviation, Inc.; International Helicopters, Inc.; Robinson Air Crane, Inc.; Smith Helicopters; Southern Helicopter, Inc.; Southwest Florida Aviation; Tamarack Helicopters, Inc. (Previously Ranger Helicopter Services, Inc.); U.S. Helicopter, Inc.; Western International Aviation, Inc., and Williams Helicopter Corporation (Previously Scott Paper Co.):

Amendment 39–12628. Docket No. 2001-SW–14-AD. Supersedes AD 2000–22–51, Amendment 39–12034, Docket No. 2000–SW–42–AD.

Applicability: Model HH–1K, TH–1F, TH–1L, UH–1A, UH–1B, UH–1E, UH–1F, UH–1H, UH–1L, and UH–1P; and Southwest Florida Aviation SW204, SW204HP, SW205, and SW205A–1 helicopters, manufactured by Bell Helicopter Textron Inc. (BHTI) for the Armed Forces of the United States, with main rotor mast (mast), part number (P/N) 204–011–450–007, –105, or –109, or main rotor trunnion (trunnion), P/N 204–011–105–001, installed, certificated in any category.

Note 1: This AD applies to each helicopter identified in the preceding applicability provision, regardless of whether it has been otherwise modified, altered, or repaired in the area subject to the requirements of this AD. For helicopters that have been modified, altered, or repaired so that the performance of the requirements of this AD is affected, the owner/operator must request approval for an alternative method of compliance in accordance with paragraph (c) of this AD. The request should include an assessment of the effect of the modification, alteration, or repair on the unsafe condition addressed by this AD; and if the unsafe condition has not been eliminated, the request should include specific proposed actions to address it.

Compliance: Required as indicated, unless accomplished previously.

Note 2: This AD requires using new factors to recalculate the FACTORED flight hours and the accumulated Retirement Index Number (RIN) for masts installed on certain helicopter models. This AD also expands the serial number (S/N) applicability for the one-time special inspection of the mast.

To prevent failure of a mast or trunnion, separation of the main rotor system, and subsequent loss of control of the helicopter, accomplish the following:

(a) For the mast, P/N 204–011–450–007, –105, or –109:

Note 3: The next higher assembly level for the affected P/N's are the 204–040–366 mast assemblies. Check the helicopter records for the appropriate P/N and assembly level.

(1) Within 10 hours time-in-service (TIS), create a component history card or equivalent record for the mast.

(2) Within 10 hours TIS, determine and record the accumulated RIN and revised hours TIS for the mast as follows:

(i) Review the helicopter maintenance records for the mast. If you do not know the helicopter model installation history or hours TIS of the mast, remove the mast from service, identify the mast as unairworthy, and replace it with an airworthy mast before further flight.

(ii) Calculate the accumulated RIN and the revised hours TIS for the mast in accordance with the instructions in Appendix 1 to this AD. For those hours TIS the mast has been installed on any other helicopter, calculate the RIN for that trunnion in accordance with the requirements for those helicopters.

(iii) Record the accumulated RIN and revised hours TIS for the mast on the component history card or equivalent record. Use the revised hours TIS as the new hours TIS for the mast.

(3) Before further flight after accomplishing the requirements of paragraph (a)(2) of this AD, remove from service any mast that has accumulated 265,000 or more RIN or 15,000 or more revised hours TIS and identify the mast as unairworthy. Replace the mast with an airworthy mast.

(4) Within 25 hours TIS, remove any hub spring installed on any affected helicopter.

Note 4: U.S. Army Modification Work Order (MWO) 55–1520–242–50–1 pertains to the removal of the hub spring and replacement of any required parts. U.S. Army Safety of Flight Message UH–1–00–10 dated July 19, 2000, also pertains to the subject of this AD.

(5) Determine whether a mast with a S/N less than and including 52720, 61433 through 61444, or 61457 through 61465 (regardless of prefix), has *ever* been installed on a helicopter while operated *with* a hub spring.

Note 5: The mast S/N consists of 5 or less numerical digits and may be preceded by one of the following prefixes: NFS, N9, H, AC9, CP, FA, H9, N19, RH9, or NC. There may be other prefixes in addition to those listed. The prefix and S/N may or may not be separated by a dash.

(i) If a mast has *never* been installed on a helicopter while operated with a hub spring, before reaching 100,000 RIN, inspect the upper and lower snap ring grooves in the damper clamp splined area for:

(A) A minimum radius of 0.020 inch around the entire circumference (see Figures 1 and 2), using a 100x or higher magnification. If any snap ring groove radius is less than 0.020 inch, identify the mast as unairworthy and replace it with an airworthy mast before exceeding 100,000 RIN.

(B) A burr (see Figures 1 through 3), using a 200x or higher magnification. If a burr is found in any snap ring groove/spline intersection, identify the mast as unairworthy and replace it with an airworthy mast before exceeding 170,000 RIN.

(ii) If a mast has ever been installed on a helicopter while operated *with* a hub spring or if you do not know whether a hub spring has ever been installed, before reaching 100,000 RIN or 400 *unfactored* flight hours, whichever occurs first, inspect the upper and lower snap ring grooves in the damper clamp splined area for:

(A) A minimum radius of 0.020 inch around the entire circumference (see Figures 1 and 2), using a 100x or higher magnification. If any snap ring groove radius is less than 0.020 inch, identify the mast as unairworthy and replace it with an airworthy mast before further flight.

(B) A burr (see Figures 1 through 3), using a 200x or higher magnification. If a burr is found in any snap ring groove/spline intersection, identify the mast as unairworthy and replace it with an airworthy mast before further flight.

(6) After accomplishing the requirements of paragraph (a)(2) of this AD, continue to calculate the accumulated RIN for the mast by multiplying all takeoff and external load lifts by the RIN factors defined in columns (D) and (G) of Table 1 of Appendix 1 of this AD.

(7) After accomplishing the requirements of paragraph (a)(2) of this AD, continue to count the hours TIS for the mast. Any hours TIS for the mast while installed on a helicopter operated *with* a hub spring or those hours during which you do not know whether a hub spring was installed must be factored in accordance with the instructions in Appendix 1 of this AD.

(8) This AD establishes a retirement life of 265,000 accumulated RIN or 15,000 hours TIS, whichever occurs first, for mast, P/N 204–011–450–007, –105, and –109.

(9) Within 10 days after completing the inspections required by paragraph (a)(5) of this AD, send the information contained on the AD compliance inspection report sample format contained in Appendix 2 to the Manager, Rotorcraft Certification Office, Federal Aviation Administration, Fort Worth, Texas, 76193–0170, USA. Information collection requirements contained in this AD have been approved by the Office of Management and Budget (OMB) under the provisions of the Paperwork Reduction Act of 1980 (44 U.S.C. 3501 *et seq.*) and have been assigned OMB Control Number 2120–0056.

BILLING CODE 4910–13–V

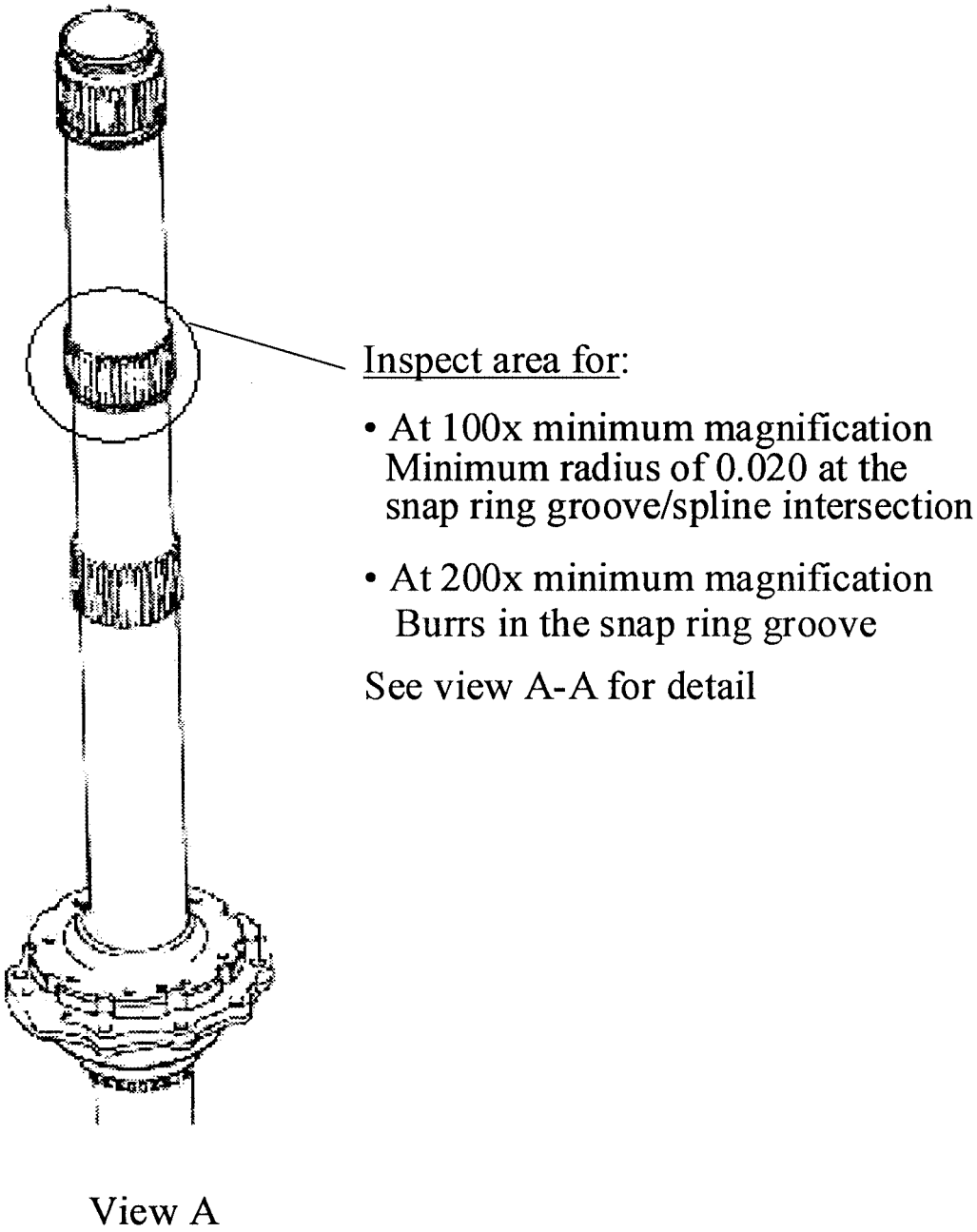
Inspect area for:
• At 100x minimum magnification
Minimum radius of 0.020 at the
snap ring groove/spline intersection
• At 200x minimum magnification
Burrs in the snap ring groove
See view A-A for detail
View A

Figure 1

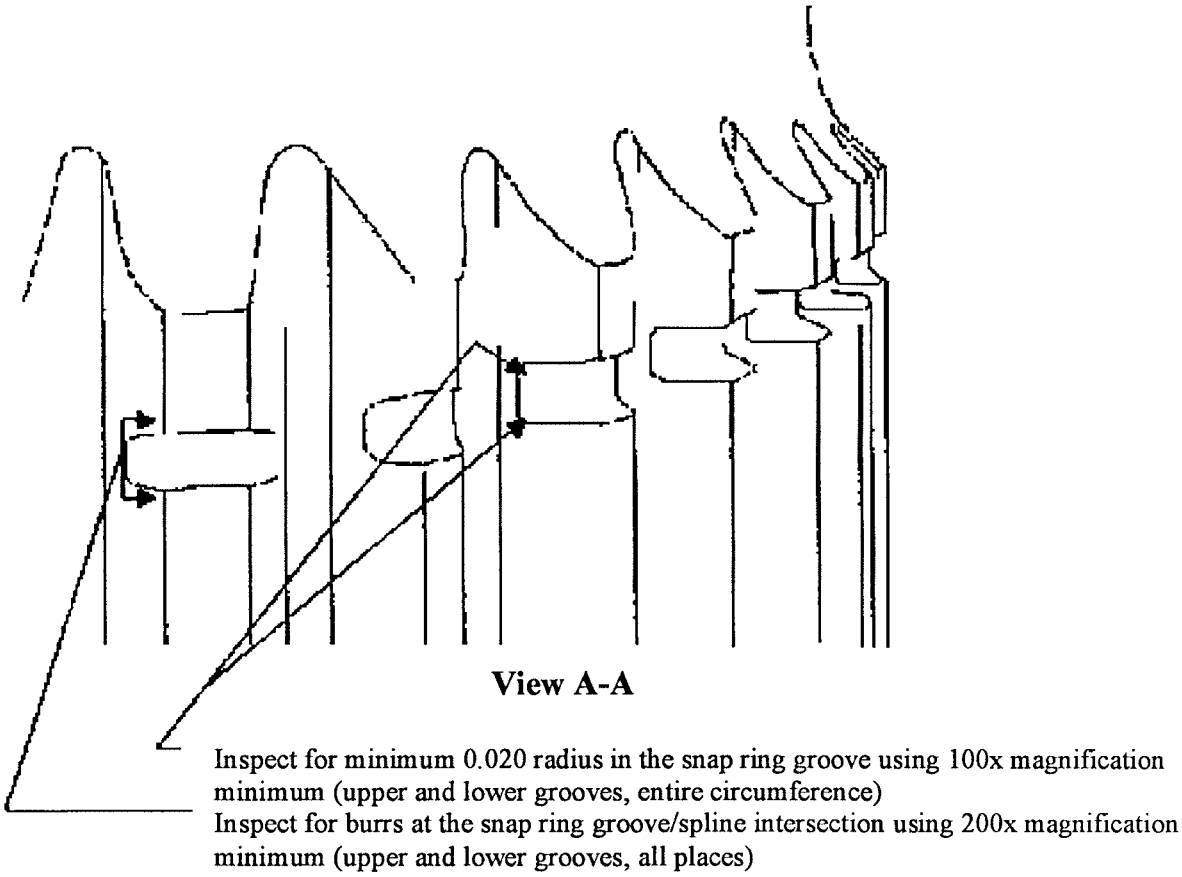

Figure 2
Snap Ring Groove/Spline Intersection

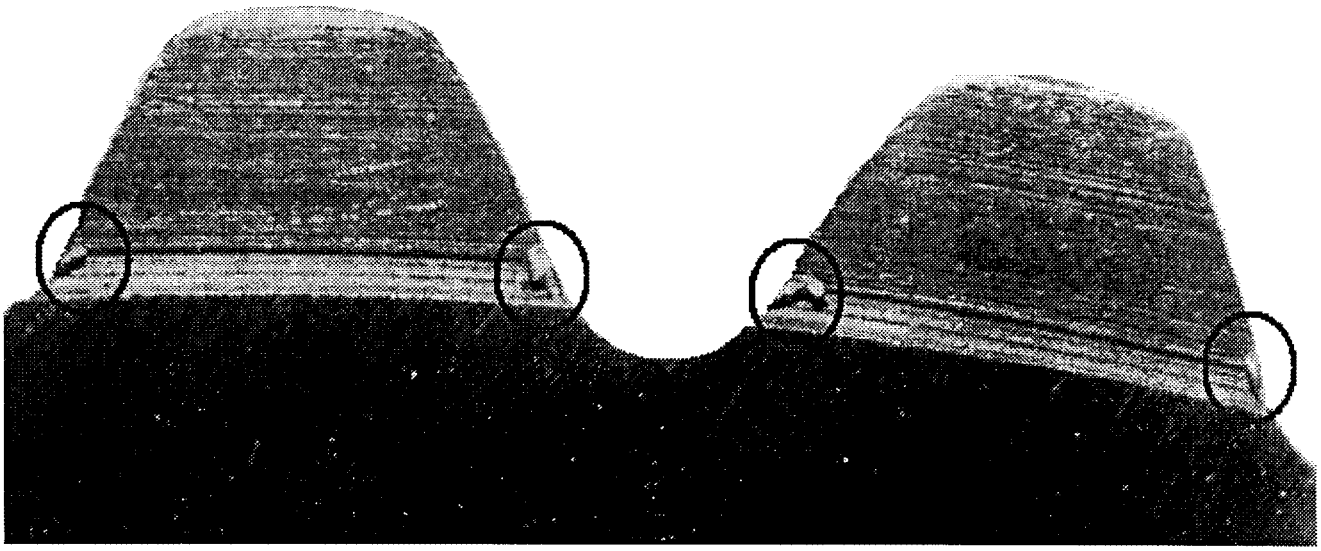

Cutaway View Looking Down from Inside Snap Ring Groove
Typical Burrs at Snap Ring Groove/Spline Intersection
Burrs are to be Inspected at 200x Minimum Magnification

Figure 3
Typical Burr at Snap Ring Groove

(b) For the trunnion, P/N 204–011–105–001:

(1) Within 10 hours TIS, create a component history card or equivalent record for the trunnion.

(2) Within 10 hours TIS, determine and record the accumulated RIN and revised hours TIS for the trunnion as follows:

(i) Review the helicopter maintenance records for the trunnion. If the helicopter model installation history or hours TIS of the trunnion are unknown, remove the trunnion from service, identify the trunnion as unairworthy, and replace it with an airworthy trunnion before further flight.

(ii) Calculate the accumulated RIN and the revised hours TIS in accordance with the instructions in Appendix 3 to this AD. For those hours TIS the trunnion has been installed on any other helicopter, calculate the RIN for that trunnion in accordance with the requirements for those helicopters.

(iii) Record the accumulated RIN and revised hours TIS for the trunnion on the component history card or equivalent record. Use the revised hours TIS as the new hours TIS for the trunnion.

(3) Before further flight after accomplishing the requirements of paragraph (b)(2) of this AD, remove from service any trunnion that has accumulated 300,000 or more RIN or 15,000 or more revised hours TIS and identify the trunnion as unairworthy. Replace the trunnion with an airworthy trunnion.

(4) After accomplishing the requirements of paragraph (b)(2) of this AD, continue to calculate the accumulated RIN for the trunnion by multiplying all takeoff and external load lifts by the RIN factors defined in columns (D) and (G) of Table 1 of Appendix 3 to this AD.

(5) After accomplishing the requirements of paragraph (b)(2) of this AD, continue to count the hours TIS for the trunnion.

(6) This AD establishes a retirement life of 300,000 accumulated RIN or 15,000 hours TIS, whichever occurs first, for the trunnion, P/N 204–011–105–001.

(c) An alternative method of compliance or adjustment of the compliance time that provides an acceptable level of safety may be used if approved by the Manager, Rotorcraft Certification Office, FAA. Operators shall submit their requests through an FAA Principal Maintenance Inspector, who may concur or comment and then send it to the Manager, Rotorcraft Certification Office.

Note 6: Information concerning the existence of approved alternative methods of compliance with this AD, if any, may be obtained from the Manager, Rotorcraft Certification Office.

(d) Special flight permits may be issued in accordance with 14 CFR 21.197 and 21.199 to operate the helicopter to a location where the requirements of this AD can be accomplished.

Appendix 1—Instructions for Calculating the RIN and Revised Hours TIS

Definitions for the RIN:

The overall *fatigue life* of a main rotor mast is a function of the number of cycles of torque, lift, and bending loads applied to it during the various modes of operation. The mast experiences both high cycle fatigue and low cycle fatigue during operation.

The *high cycle fatigue life* of the mast is a function of high frequency but relatively low level cyclic loads, which are primarily

induced by rotor rpm. The high cycle fatigue life limit for the mast is defined in terms of hours TIS because rotor rpm is basically a constant value.

The *low cycle fatigue life* of the mast is a function of the number of less frequent but relatively high level cyclic loads experienced primarily during takeoffs and external load lifts. The low cycle fatigue life limit for the mast is expressed in terms of the accumulated RIN.

A *load cycle* is a power cycle caused by a repeating or fluctuating load that alternates from a starting power value, goes to a higher power value, and returns to the starting power value.

The *accumulated RIN* is defined as the total number of load cycles multiplied by a **RIN factor** to account for the difference in torque levels applied to the same mast (since manufactured) when installed in different helicopter models. The level of torque applied to the mast is directly proportional to the transmission output horsepower.

The *unfactored hours TIS* is the time from the moment a helicopter leaves the surface of the earth until it touches it at the next point of landing with no factors applied.

The *FACTORED flight hours* is the *unfactored* hours TIS multiplied by a frequency of event hour factor based on the torque (horsepower) of the helicopter model in which it was installed and the usage of the helicopter.

The *revised hours TIS* is the new hours TIS for the mast as determined by following the instructions in this appendix.

An *external load lift* is defined as a lift where the load is carried, or extends, outside of the aircraft fuselage.

Calculation of RIN and Revised Hours TIS:

There are two methods for calculating the accumulated RIN and the revised hours TIS, depending on the available service history information for the mast. In some cases, one method will be used for a portion of the mast service history, and the other method will be used for another portion of the mast service history. Both methods require knowledge of all the helicopter models in which the mast was installed.

Calculation of RIN and Revised Hours TIS when the Exact Number of Takeoffs and External Load Lifts is Known (Reference Tables 1 and 3):

Table 1 of Appendix 1 is the worksheet for calculating the accumulated mast RIN when the exact number of takeoffs and external load lifts is *known.* Table 3 of Appendix 1 is the worksheet that has the frequency of event hour factors to calculate the FACTORED flight hours for the *unfactored* hours TIS for the mast while installed on a helicopter operated *with* a hub spring or the hub spring installation history *is unknown.*

The RIN factor for each external load lift is twice that specified for each takeoff because two torque events are experienced during a typical external load lift.

Using Table 1, calculate accumulated RIN as follows:

1. Enter the total number of takeoffs for the particular mast model/helicopter model combination in column (C).

2. Multiply the value entered in column (C) by the RIN factor listed in column (D), and enter the result in column (E). This is the total accumulated RIN due to takeoffs.

3. Enter the total number of external load lifts for the particular mast model/helicopter model combination in column (F).

4. Multiply the value entered in column (F) by the RIN factor listed in column (G), and enter the result in column (H). This is the accumulated RIN due to external load lifts.

5. Add the values from column (E) and column (H) and enter the result in column (I). This is the total accumulated RIN to-date for the mast for the particular mast model/helicopter model combination.

6. Add the accumulated RIN subtotals for the various mast model/helicopter combinations in column (I) and enter the result in the space provided. This is the total accumulated RIN for the mast.

Using Table 3, calculate the revised hours TIS as follows:

7. Determine the *unfactored* hours TIS for the mast while installed on a helicopter operated *with* a hub spring or the number of hours TIS for which you do not know whether a hub spring was installed for each of the particular mast model/helicopter model combinations.

8. Determine the frequency of events per hour for each of the particular mast model/helicopter model combinations dividing the combined number of takeoffs and external load lifts by the corresponding *unfactored* hours TIS.

9. Multiply the value for *unfactored* hours TIS for each of the particular mast model/helicopter model combinations by the appropriate value in column (E) of Table 3 for the frequency of event hour factor. These are the total FACTORED flight hours for the particular mast model/helicopter model combinations.

10. Add the FACTORED flight hour subtotals for each of the particular mast model/helicopter model combinations. This is the total FACTORED flight hours for the mast while installed on a helicopter operated *with* a hub spring or when you do not know whether a hub spring was installed.

11. Determine the *unfactored* hours TIS for the mast while installed on a helicopter operated *without* a hub spring.

12. Add to the total FACTORED flight hours for the mast while installed on a helicopter operated *with* a hub spring or those hours during which you do not know whether a hub spring was installed to the *unfactored* hours TIS as determined in step 11. This is the total revised hours TIS for the mast when the exact number of takeoffs and external load lifts is known.

Calculation of RIN and Revised Hours TIS when Exact Number of Takeoffs and External Load Lifts is Unknown (Reference Tables 2, 3, and 4):

Tables 2, 3, and 4 of Appendix 1 are the worksheets for calculating the FACTORED flight hours and accumulated mast RIN when the exact number of takeoffs and external load lifts *is unknown.*

Using Tables 2, 3, and 4, calculate the accumulated mast RIN and revised hours TIS as follows:

1. Enter the *unfactored* hours TIS for the particular mast model/helicopter model combination in column (C) of Tables 2 and 3.

2. Using service history for the mast, select the appropriate frequency of event hour factor from column (E) of Tables 2 and 3 based on the total combined number of takeoffs and external load lifts per hour shown in column (D).

3. Multiply the value for *unfactored* hours TIS entered in column (C) by the appropriate value in column (E) for the frequency of event hour factor as determined in step 2. Enter the result in column (F) of Tables 2 and 3. This is the total FACTORED flight hours for the particular mast model/helicopter model combination.

4. Enter the value for FACTORED flight hours from column (F) of Tables 2 and 3 into column (C) of Table 4.

5. Using Table 4, multiply the value for FACTORED flight hours in column (C) by the appropriate RIN conversion factor listed in column (D), by the appropriate RIN adjustment factor in column (E), and enter the result in column (F). This is the accumulated RIN to-date for the particular mast model/helicopter model combination.

6. Add the accumulated RIN subtotals for the various mast model/helicopter model combinations in column (F) of Table 4 and enter the result in the space provided. This is the total accumulated RIN for the mast.

7. Add the factored flight hour subtotals for the various mast model/helicopter model combinations as determined in steps 1 through 4. This is the total revised hours TIS for the mast when the exact number of takeoffs and external load lifts *is unknown.*

Sample Mast Calculation

Given the following known service history for the mast:

Mast, P/N 204–011–450–007, was first purchased as a United States military surplus part with valid historical records. The mast had accumulated 550 hours military TIS on an Army UH–1H with a hub spring installed.

The mast was first installed on a restricted category UH–1H former military helicopter for 250 hours TIS. The helicopter had a rating of 1100 takeoff horsepower (T.O. hp) at sea level standard day conditions (SLS), and the operation of the helicopter *without* a hub spring cannot be determined. The helicopter was used for fire fighting operations and the exact number of takeoffs and external load lifts is unknown. It is known, however, that the helicopter averaged less than 15 combined takeoffs and external load lifts per hour.

The mast was then removed and subsequently installed on a restricted category UH–1E former military helicopter (1100 T.O. hp SLS rating) *without* a hub spring for 450 hours TIS. It is known that the helicopter was used primarily for aerial surveying for the first 200 hours of operation. The exact number of takeoffs and external load lifts is unknown, but it is known that the helicopter averaged less than 16 takeoffs per hour, with no external load lifts. It was subsequently used for repeated heavy lift operation for the next 250 hours of operation and averaged between 25 and 31 combined

takeoffs and external load lifts per hour during this period of time.

The mast was then removed and installed on another restricted category UH–1H former military helicopter (1100 T.O. hp SLS rating) for a total of 150 hours TIS with accurate records indicating that it experienced 100 takeoffs and 2,450 external load lifts. A hub spring was installed on the helicopter for the first 50 hours of operation with a calculated average of 19 combined takeoffs and external load lifts per hour (as determined from aircraft records for the first 50 hours of operation). The hub spring was subsequently removed for the remaining 100 hours TIS.

Calculate the FACTORED flight hours and total accumulated RIN for the mast as follows:

FACTORED Flight Hours and Accumulated RIN while installed in U.S. military Model UH–1H:

Calculate FACTORED flight hours from Table 3 as follows:
FACTORED Flight Hours
= (*unfactored* hours TIS) × (frequency of event hour factor)
= (column C) × (column E)
= (550) × (10)
= 5,500 hours

Then using Table 4, calculate the accumulated RIN as follows:
Accumulated RIN
= (FACTORED flight hours) × (RIN conversion factor) × (RIN adjustment factor)
= (column C) × (column D) × (column E)
= (5,500) × (20) × (1)
= 110,000 RIN

FACTORED Flight Hours and Accumulated RIN while installed in restricted category Model UH–1H:

Calculate FACTORED flight hours from Table 3 as follows:
FACTORED Flight Hours
= (*unfactored* hours TIS) × (frequency of event hour factor)
= (column C) × (column E)
= (250) × (14)
= 3,500 hours

Then using Table 4, calculate the accumulated RIN as follows:
Accumulated RIN
= (FACTORED flight hours) × (RIN conversion factor) × (RIN adjustment factor)
= (column C) × (column D) × (column E)
= (3,500) × (20) × (1)
= 70,000 RIN

FACTORED Flight Hours and Accumulated RIN while installed in restricted category Model UH–1E:

Calculate FACTORED flight hours from Table 2 as follows:
FACTORED Flight Hours (for first 200 hrs.)
= (*unfactored* hours TIS) × (frequency of event hour factor)
= (column C) × (column E)
= (200) × (5)
= 1,000 hours
FACTORED Flight Hours (for next 250 hrs.)
= (*unfactored* hours TIS) × (frequency of event hour factor)
= (column C) × (column E)
= (250) × (10)
= 2,500 hours

Then using Table 4, calculate the accumulated RIN as follows:
Accumulated RIN
= (FACTORED flight hours) × (RIN conversion factor) × (RIN adjustment factor)
= (column C) × (column D) × (column E)
= (1,000) × (20) × (1) + (2,500) × (20) × (1)
= 20,000 + 50,000
= 70,000 RIN

FACTORED Flight Hours and Accumulated RIN while installed in another restricted category Model UH–1H:

Calculate the accumulated RIN from Table 1 and the given number of takeoffs and external load lifts as follows:
Accumulated RIN
= (number of takeoffs × RIN factor per takeoff) + (number of external load lifts × RIN factor per external load lifts.
= (column C) × (column D) + (column F) × (column G)
= (100) × (3) + (2,450) × (6)
= 15,000 RIN

Calculate the FACTORED flight hours for the mast while installed on a helicopter operated *with* a hub spring or when you do not know whether a hub spring was installed using the frequency of event hour factors from Table 3 as follows:
FACTORED Flight Hours (w/ hub spring)
= (*unfactored* hours TIS) × (frequency of event hour factor)
= (column C) × (column E)
= (50) × (16)
= 800 hours
Unfactored Hours TIS (w/o hub spring)
= (unfactored hours TIS)
= 100 hours

Note that the FACTORED flight hours are not used in the accumulated RIN calculations when the number of takeoffs and external load lifts *is known.*

Calculate the Total Accumulated RIN and Revised Hours TIS as follows:

The total accumulated RIN to-date for the mast is the sum of the subtotals from Tables 1 and 4.
Total Accumulated RIN
= 110,000 + 70,000 + 70,000 + 15,000
= 265,000

The total FACTORED flight hours for the mast is the sum of the subtotals from Tables 2 and 3 and the total FACTORED flight hours as determined in the preceding step 12 when the exact number of takeoff and external load lifts *is known.*
Total FACTORED Flight Hours
= 5,500 + 3,500 + 1,000 + 2,500 + 800
= 13,300 hours

The revised hours TIS to-date for the mast is the sum of the total FACTORED flight hours and the additional *unfactored* hours TIS for the mast while installed on a helicopter operated without a hub spring and the exact number of takeoffs and external load lifts *is known.*
Revised Hours TIS
= 5,500 + 3,500 + 1,000 + 2,500 + 800 + 100
= 13,300 + 100
= 13,400 hours

Both the total accumulated RIN and the revised hours TIS need to be determined and checked for exceeding the allowable life limits for the mast. Also, note that the recalculated total accumulated RIN for this sample mast would be 265,000 RIN. Therefore, this mast would be removed from service.

The values for the sample problem are shown in Tables 1–4 for illustration purposes only. The FACTORED flight hours TIS shown in the brackets in Table 3 are calculated for the mast while installed on a helicopter operated with a hub spring or when you do not know whether a hub spring was installed and the exact number of takeoffs and external load lifts *is known*. These FACTORED flight hours are not used in the accumulated RIN calculations.

BILLING CODE 4910–13–U

Mast RIN Calculation Based on Takeoffs and External Load Lifts

Mast A/C Model Installation	Mast P/N 204-011-450	Number Of Takeoffs	RIN Factor Per Takeoff	Total Takeoff RIN	Number of External Load Lifts	RIN Factor Per External Load Lift	Total External Load Lift RIN	Accumulated RIN
(A)	(B)	(C)	(D)	(E) =(C) x (D)	(F)	(G)	(H) =(F) x (G)	(I) =(E) + (H)
Restricted Category TIS (≤700 T.O. hp SLS)	204-011-450-007		0.25			0.5		
	204-011-450-105		0.25			0.5		
	204-011-450-109		0.25			0.5		
Restricted Category TIS (700<T.O. hp SLS ≤1000)	204-011-450-007		1.5			3		
	204-011-450-105		1.5			3		
	204-011-450-109		1.5			3		
Restricted Category TIS (1000<T.O. hp SLS ≤1100)	204-011-450-007	*100*	3	*300*	*2,450*	6	*14,700*	*15,000*
	204-011-450-105		3			6		
	204-011-450-109		3			6		
Restricted Category TIS (1100<T.O. hp SLS ≤1290)	204-011-450-007		6			12		
	204-011-450-105		6			12		
	204-011-450-109		6			12		
Restricted Category TIS (>1290 T.O. hp SLS)	204-011-450-007		Contact FAA*			Contact FAA*		Contact FAA*
	204-011-450-105							
	204-011-450-109							
Total RIN=								*15,000*

*Contact FAA at (817) 222-5447

Appendix 1 - Table 1

Calculation of Mast FACTORED Flight Hours (Without a Hub Spring Installed)

Mast A/C Model Installation	Mast P/N 204-011-450 (without a hub spring installed)	*Unfactored* Hours TIS on Model	Frequency Of Events Per Hour	Frequency of Event Hour Factor	FACTORED Flight Hours On Model
(A)	(B)	(C)	(D)	(E)	(F) = (C) x (E)
Restricted Category TIS (≤700 T.O. hp SLS)	204-011-450-007, –105, or –109		1.0-37.00	1.00	
			37.01-46.00	1.25	
			46.01-55.00	1.50	
			55.01-63.00	1.75	
			Greater than 63.00	Contact FAA*	
			Unknown	1.75	
Restricted Category TIS (700<T.O. hp SLS ≤1000)	204-011-450-007, –105, or –109		1.0-7.00	1.00	
			7.01-13.00	2.00	
			13.01-18.00	3.00	
			18.01-30.00	5.00	
			30.01-41.00	7.00	
			41.01-52.00	9.00	
			52.01-63.00	11.00	
			Greater than 63.00	Contact FAA*	
			Unknown	11.00	
Restricted Category TIS (1000<T.O. hp SLS ≤1100)	204-011-450-007, –105, or –109		1.0-5.00	1.00	
			5.01-7.00	2.00	
			7.01-10.00	3.00	
		200	10.01-16.00	5.00	***1,000***
			16.01-24.00	7.50	
		250	24.01-31.00	10.00	***2,500***
			31.01-46.00	15.00	
			46.01-61.00	20.00	
			Greater than 61.00	Contact FAA*	
			Unknown	20.00	
Restricted Category TIS (1100<T.O. hp SLS ≤1290)	204-011-450-007, –105, or –109		1.0-5.00	2.10	
			5.01-7.00	4.00	
			7.01-10.00	6.00	
			10.01-15.00	9.00	
			15.01-19.00	12.00	
			19.01-25.00	16.00	
			25.01-31.00	20.00	
			31.01-46.00	30.00	
			46.01-60.00	40.00	
			Greater than 60.00	Contact FAA*	
			Unknown	40.00	
Military TIS	204-011-450-007, –105,				
(≤700 T.O. hp SLS)	or –109		All	1.00	
(≤1000 T.O. hp SLS)			All	2.00	
(≤1100 T.O. hp SLS)			All	3.50	
(≤1290 T.O. hp SLS)			All	7.00	
(>1290 T.O. hp SLS)			All	Contact FAA*	

*Contact FAA at (817) 222–5447

Appendix 1 - Table 2

Calculation of Mast FACTORED Flight Hours (With a Hub Spring Installed)

Mast A/C Model Installation	Mast P/N 204-011-450 (*with* a hub spring or for which you do not know whether a hub spring was installed)	*Unfactored* Hours TIS on Model	Frequency Of Events Per Hour	Frequency of Event Hour Factor	FACTORED Flight Hours On Model
(A)	(B)	(C)	(D)	(E)	(F) = (C) x (E)
Restricted Category TIS (≤700 T.O. hp SLS)	204-011-450-007, –105, or –109		1.0-6.00	10.00	
			6.01-12.00	10.25	
			12.01-21.00	10.50	
			21.01-39.00	11.00	
			39.01-63.00	11.75	
			Greater than 63.00	Contact FAA*	
			Unknown	11.75	
Restricted Category TIS (700<T.O. hp SLS ≤1000)	204-011-450-007, –105, or –109		1.0-6.00	10.00	
			6.01-15.00	12.00	
			15.01-26.00	14.00	
			26.01-37.00	16.00	
			37.01-49.00	18.00	
			49.01-63.00	21.00	
			Greater than 63.00	Contact FAA*	
			Unknown	21.00	
Restricted Category TIS (1000<T.O. hp SLS ≤1100)	204-011-450-007, –105, or –109		1.0-6.00	10.00	
			6.01-9.00	12.00	
		250	9.01-15.00	14.00	***3,500***
		<50>	15.01-21.00	16.00	***<800>***
			21.01-33.00	20.00	
			33.01-45.00	24.00	
			45.01-61.00	30.00	
			Greater than 61.00	Contact FAA*	
			Unknown	30.00	
Restricted Category TIS (1100<T.O. hp SLS ≤1290)	204-011-450-007, –105, or –109		1.0-6.00	10.00	
			6.01-11.00	15.00	
			11.01-18.00	20.00	
			18.01-26.00	25.00	
			26.01-33.00	30.00	
			33.01-40.00	35.00	
			40.01-48.00	40.00	
			48.01-60.00	50.00	
			Greater than 60.00	Contact FAA*	
			Unknown	50.00	
Military TIS					
(≤1290 hp T.O. SLS)	204-011-450-007, –105,	***550***	All	10.00	***5,500***
(>1290 hp T.O. SLS)	or –109		All	Contact FAA*	

*Contact FAA at (817) 222–5447

Appendix 1 - Table 3

Mast RIN Calculation Based on Hours TIS

Mast A/C Model Installation	Mast P/N 204-011-450	FACTORED Flight Hours On Model	RIN Conversion Factor	RIN Adjustment Per AD 2000-15-52	Accumulated RIN
(A)	(B)	(C) (From Table 2 of Appendix I)	(D)	(E)	(F) =(C) x (D) x (E)
Restricted Category or Military TIS with (≤1290 T.O. hp SLS)	204-011-450-007	*12,500*	20	1	*250,000*
	204-011-450-105		20	1	
	204-011-450-109		20	1	
Restricted Category or Military TIS with (>1290 T.O. hp SLS)	204-011-450-007	Contact FAA*	Contact FAA*	Contact FAA*	Contact FAA*
	204-011-450-105				
	204-011-450-109				
Total RIN=					*250,000*

Contact FAA at (817) 222–5447

Appendix 1 - Table 4

Subtotals for the FACTORED Flight Hours and Accumulated RIN
For Table 4 of the Sample Mast Calculation:

FACTORED Flight Hours				Accumulated RIN
5,500	X	20	=	110,000
3,500	X	20	=	70,000
3,500	X	20	=	70,000
12,500				250,000

BILLING CODE 4910–13–C

Appendix 2—AD Compliance Inspection Report (Sample Format) P/N 204–011–450–007/–105/–109 Main Rotor Mast

Provide the following information and mail or fax it to: Manager, Rotorcraft Certification Office, Federal Aviation Administration, Fort Worth, Texas, 76193–0170, USA, Fax: 817–222–5783

Aircraft Registration No:
Helicopter Model:
Helicopter S/N:
Mast P/N:
Mast S/N:
Mast RIN:
Mast Total TIS:
Inspection Results

Were any radii during inspection of this mast determined to be less than 0.020 inch? If yes, what was the dimension measured?
Was a burr found in the inspected snap ring grooves?
Were cracks noted during the inspection?
Who performed this inspection?
Provide any other comments?

Appendix 3—Instructions for Calculating Trunnion RIN and Revised Hours TIS

Definitions for the RIN:

The overall *fatigue life* of a main rotor trunnion is a function of the number of cycles of torque, lift, and bending loads applied to it during the various modes of operation. The trunnion experiences both high cycle fatigue and low cycle fatigue during operation.

The *high cycle fatigue life* of the trunnion is a function of high frequency but relatively low level cyclic loads, which are primarily induced by rotor rpm. The high cycle fatigue life limit for the trunnion is defined in terms of hours TIS because rotor rpm is basically a constant value.

The *low cycle fatigue life* of the trunnion is a function of the number of less frequent but relatively high level cyclic loads experienced primarily during takeoffs and external load lifts. The low cycle fatigue life limit for the trunnion is expressed in terms of the accumulated RIN.

A *load cycle* is a power cycle caused by a repeating or fluctuating load that alternates from a starting power value, goes to a higher power value, and returns to the starting power value.

The *accumulated RIN* is defined as the total number of load cycles multiplied by a RIN factor to account for the difference in torque levels applied to the same trunnion (since manufactured) when installed in different helicopter models. The level of torque applied to the trunnion is directly proportional to the transmission output horsepower.

The *unfactored hours TIS* is the time from the moment a helicopter leaves the surface of the earth until it touches it at the next point of landing with no factors applied.

The *FACTORED flight hours* is the *unfactored* hours TIS multiplied by a frequency of event hour factor based on the torque (horsepower) of the helicopter model in which it was installed and the usage of the helicopter.

The *revised hours TIS* is the new hours TIS for the trunnion as determined by following the instructions in this appendix.

An *external load lift* is defined as a lift where the load is carried, or extends, outside of the aircraft fuselage.

Calculation of RIN and Revised Hours TIS:

There are two methods for calculating the accumulated RIN and the revised hours TIS, depending on the available service history information for the trunnion. In some cases, one method will be used for a portion of the trunnion service history, and the other method will be used for another portion of the trunnion service history. Both methods require knowledge of all the helicopter models in which the trunnion was installed.

Calculation of RIN and Revised Hours TIS when the Exact Number of Takeoffs and External Load Lifts is Known (Reference Table 1):

Table 1 of Appendix 3 is the worksheet for calculating the accumulated trunnion RIN when the exact number of takeoffs and external load lifts is *known.*

The RIN factor for each external load lift is twice that specified for each takeoff because two torque events are experienced during a typical external load lift.

Using Table 1, calculate the accumulated RIN as follows:

1. Enter the total number of takeoffs for the particular trunnion model/helicopter model combination in column (C).
2. Multiply the value entered in column (C) by the RIN factor listed in column (D), and enter the result in column (E). This is the total accumulated RIN due to takeoffs.
3. Enter the total number of external load lifts for the particular trunnion model/helicopter model combination in column (F).
4. Multiply the value entered in column (F) by the RIN factor listed in column (G), and enter the result in column (H). This is the accumulated RIN due to external load lifts.
5. Add the values from column (E) and column (H) and enter the result in column (I). This is the total accumulated RIN to-date for the trunnion for the particular trunnion model/helicopter model combination.
6. Add the accumulated RIN subtotals for the various trunnion model/helicopter combinations in column (I) and enter the result in the space provided. This is the total accumulated RIN for the trunnion.

Calculation of RIN and Revised Hours TIS when Exact Number of Takeoffs and External Load Lifts is Unknown (Reference Tables 2 and 3):

Tables 2 and 3 of Appendix 3 are the worksheets for calculating the FACTORED flight hours and accumulated trunnion RIN when the exact number of takeoffs and external load lifts *is unknown.*

Using Tables 2 and 3, calculate the accumulated trunnion RIN and revised hours TIS as follows:

1. Enter the *unfactored* hours TIS for the particular trunnion model/helicopter model combination in column (C) of Table 2.
2. Using service history for the trunnion, select the appropriate frequency of event hour factor from column (E) of Table 2 based on the total combined number of takeoffs and external load lifts per hour shown in column (D).
3. Multiply the value for *unfactored* hours TIS entered in column (C) by the appropriate value in column (E) for the frequency of event hour factor as determined in step 2. Enter the result in column (F) of Table 2. This is the total FACTORED flight hours for the particular trunnion model/helicopter model combination.
4. Enter the value for FACTORED flight hours from column (F) of Table 2 into column (C) of Table 3.
5. Using Table 3, multiply the value for FACTORED flight hours in column (C) by the appropriate RIN conversion factor listed in column (D), by the appropriate RIN adjustment factor in column (E), and enter the result in column (F). This is the accumulated RIN to-date for the particular trunnion model/helicopter model combination.
6. Add the accumulated RIN subtotals for the various trunnion model/helicopter model combinations in column (F) of Table 3 and enter the result in the space provided. This is the total accumulated RIN for the trunnion.
7. Add the factored flight hour subtotals for the various trunnion model/helicopter model combinations as determined in steps 1 through 4. This is the total revised hours TIS for the trunnion when the exact number of takeoffs and external load lifts is *unknown.*

Sample Trunnion Calculation

Given the following known service history for the trunnion:

Trunnion, P/N 204–011–105–001, was first purchased as a United States military surplus part with valid historical records. The trunnion had accumulated 550 hours military TIS on an Army UH–1H.

The trunnion was first installed on a restricted category UH–1H former military helicopter (1100 T.O. hp SLS rating) for 450 hours TIS. It is known that the helicopter was used primarily for aerial surveying for the first 200 hours of operation. The exact number of takeoffs and external load lifts is unknown, but it is known that the helicopter averaged less than 16 takeoffs per hour with no external load lifts. It was subsequently used for repeated heavy lift operation for the next 250 hours of operation and averaged between 25 and 31 combined takeoffs and external load lifts per hour during this period of time.

The trunnion was then removed and subsequently installed on a restricted category UH–1E former military helicopter (1100 T.O. hp SLS rating) for a total of 150 hours TIS with accurate records indicating that it experienced 100 takeoffs and 2,450 external load lifts.

Calculate the FACTORED flight hours and total accumulated RIN for the trunnion as follows:

FACTORED Flight Hours and Accumulated RIN while installed in U.S. military Model UH–1H:

Calculate FACTORED flight hours from Table 2 as follows:

FACTORED Flight Hours

= (*unfactored* hours TIS) × (frequency of event hour factor)
=(column C) × (column E)
=(550) × (1)
=550 hours

Then using Table 3, calculate the accumulated RIN as follows:

Accumulated RIN
= (FACTORED flight hours) × (RIN conversion factor) × (RIN adjustment factor)
= (column C) × (column D) × (column E)
= (550) × (20) × (1)
= 11,000 RIN

FACTORED Flight Hours and Accumulated RIN while installed in restricted category Model UH–1H:

Calculate FACTORED flight hours from Table 2 as follows:

FACTORED Flight Hours (for first 200 hours)
= (*unfactored* hours TIS) × (frequency of event hour factor)
= (column C) × (column E)
= (200) × (1)
= 200 hours

FACTORED Flight Hours (for next 250 hours)
= (*unfactored* hours TIS) × (frequency of event hour factor)
= (column C) × (column E)
=(250) × (2)
=500 hours

Then using Table 3, calculate the accumulated RIN as follows:

Accumulated RIN
= (FACTORED flight hours) × (RIN conversion factor) × (RIN adjustment factor)
= (column C) × (column D) × (column E)
= (200) × (20) × (1) + (500) × (20) × (1)
= 4,000 + 10,000
= 14,000 RIN

FACTORED Flight Hours and Accumulated RIN while installed in restricted category Model UH–1E:

Calculate the accumulated RIN from Table 1 and the given number of takeoffs and external load lifts as follows:

Accumulated RIN
= (number of takeoffs × RIN factor per takeoff) + (number of external load lifts × RIN factor per external load lifts)
= (column C) × (column D) + (column F) × (column G)
= (100) × (1.5) + (2,450) × (3)
= 7,500 RIN

Calculate the Total Accumulated RIN and Revised Hours TIS as follows:

The total accumulated RIN to-date for the trunnion is the sum of the subtotals from Tables 1 and 3.

Total Accumulated RIN
= 11,000 + 14,000 + 7,500
= 32,500

The total FACTORED flight hours for the trunnion is the sum of the subtotals from Table 2.

Total FACTORED Flight Hours
= 550 + 200 + 500
= 1,250 hours

The revised hours TIS to-date for the trunnion is the sum of the total FACTORED flight hours and the additional *unfactored* hours TIS for the trunnion when the exact number of takeoff and external load lifts is *known.*

Revised Hours TIS
= 550 + 200 + 500 + 150
= 1,250 + 150
= 1,400 hours

Both the total accumulated RIN and the revised hours TIS need to be determined and checked for exceeding the allowable life limits for the trunnion.

The values for the sample problem are shown in Tables 1–3 for illustration purposes only.

BILLING CODE 4910–13–U

Trunnion RIN Calculation Based on Takeoffs and External Load Lifts

Trunnion A/C Model Installation	Trunnion P/N 204-011-105	Number Of Takeoffs	RIN Factor Per Takeoff	Total Takeoff RIN	Number of External Load Lifts	RIN Factor Per External Load Lift	Total External Load Lift RIN	Accumulated RIN
(A)	(B)	(C)	(D)	(E) =(C) x (D)	(F)	(G)	(H) =(F) x (G)	(I) =(E) + (H)
Restricted Category TIS (≤700 T.O. hp SLS)	204-011-105-001		0.25			0.5		
Restricted Category TIS (700<T.O. hp SLS ≤1000)	204-011-105-001		1			2		
Restricted Category TIS (1000<T.O. hp SLS ≤1100)	204-011-105-001	100	1.5	150	2,450	3	7,350	7,500
Restricted Category TIS (1100<T.O. hp SLS ≤1290)	204-011-105-001		5			10		
Restricted Category TIS (>1290 T.O. hp SLS)	204-011-105-001		Contact FAA*			Contact FAA*		Contact FAA*
Total RIN=								*7,500*

*Contact FAA at (817) 222-5447

Appendix 3 - Table 1

Calculation of Trunnion FACTORED Flight Hours

Trunnion A/C Model Installation	Trunnion P/N 204-011-105	*Unfactored* Hours TIS on Model	Frequency Of Events Per Hour	Frequency of Event Hour Factor	FACTORED Flight Hours On Model
(A)	(B)	(C)	(D)	(E)	(F) = (C) x (E)
Restricted Category TIS (≤1000 T.O. hp SLS))	204-011-105-001		1.0-40.00	1.00	
			Greater than 40.00	Contact FAA*	
			Unknown	1.00	
Restricted Category TIS (1000<T.O. hp SLS ≤1100)	204-011-105-001	***200***	1.0-20.00	1.00	***200***
		250	20.01-44.00	2.00	***500***
			44.01-69.00	3.00	
			Greater than 69.00	Contact FAA*	
			Unknown	3.00	
Restricted Category TIS (1100<T.O. hp SLS ≤1290)	204-011-105-001		1.0-5.00	1.00	
			5.01-8.00	1.50	
			8.01-12.00	2.00	
			12.01-18.00	3.00	
			18.01-32.00	5.00	
			32.01-48.00	7.00	
			48.01-62.00	9.00	
			Greater than 62.00	Contact FAA*	
			Unknown	9.00	
Military TIS	204-011-105-001				
(≤1100 T.O. hp SLS)		***550***	All	1.00	***550***
(≤1290 T.O. hp SLS)			All	2.00	
(>1290 T.O. hp SLS)			All	Contact FAA*	

*Contact FAA at (817) 222–5447

Appendix 3 - Table 2

Trunnion RIN Calculation Based on Hours TIS

Trunnion A/C Model Installation	Trunnion P/N 204-011-105	FACTORED Flight Hours On Model	RIN Conversion Factor	RIN Adjustment Per AD 2000-15-52	Accumulated RIN
(A)	(B)	(C) (From Table 2 of Appendix I)	(D)	(E)	(F) =(C) x (D) x (E)
Restricted Category or Military TIS with (≤1000 T.O. hp SLS)	204-011-105-001		20	1.0	
Restricted Category or Military TIS with (1000<T.O. hp SLS ≤1100)	204-011-105-001	*1,250*	20	1.0	25,000
Restricted Category or Military TIS with (1100<T.O. hp SLS ≤1290)	204-011-105-001		20	1.0	
Restricted Category or Military TIS with (>1290 T.O. hp SLS)	204-011-105-001	Contact FAA*	Contact FAA*	Contact FAA*	Contact FAA*
Total RIN=					*25,000*

Contact FAA at (817) 222–5447

Appendix 3 - Table 3

Subtotals for the FACTORED Flight Hours and Accumulated RIN For Table 3 of the Sample Trunnion Calculation:

FACTORED Flight Hours				Accumulated RIN
550	X	20	=	11,000
200	X	20	=	4,000
500	X	20	=	10,000
1,250				25,000

BILLING CODE 4910–13–C

(e) This amendment becomes effective on March 8, 2002.

Issued in Fort Worth, Texas, on January 22, 2002.

Eric Bries,

Acting Manager, Rotorcraft Directorate, Aircraft Certification Service.

[FR Doc. 02–2422 Filed 1–31–02; 8:45 am]

BILLING CODE 4910–13–U

DEPARTMENT OF TRANSPORTATION

Federal Aviation Administration

14 CFR Part 39

[Docket No. 2001–SW–38–AD; Amendment 39–12625; AD 2002–01–30]

RIN 2120–AA64

Airworthiness Directives; Eurocopter France Model SE 3130, SE 313B, SA 315B, SE 3160, SA 316B, SA 316C, SA 3180, SA 318B, SA 318C, and SA 319B Helicopters

AGENCY: Federal Aviation Administration, DOT.

ACTION: Final rule; request for comments.

SUMMARY: This amendment adopts a new airworthiness directive (AD) for Eurocopter France (ECF) Model SE 3130, SE 313B, SA 315B, SE 3160, SA 316B, SA 316C, SA 3180, SA 318B, SA 318C, and SA 319B helicopters with a certain main gearbox (MGB) installed. This action requires inspecting the magnetic plug for magnetic particles at specified intervals in addition to the MGB inspections currently required. This AD also requires, within 50 hours time-in-service (TIS), dye-penetrant inspecting the MGB bevel gear for a crack, and if a crack is found, replacing the cracked bevel gear with an airworthy bevel gear before further flight. This amendment is prompted by an MGB failure due to a cracked bevel gear. This condition, if not corrected, could result in failure of the MGB, loss of the main rotor drive, and subsequent loss of control of the helicopter.

DATES: Effective February 19, 2002.

Comments for inclusion in the Rules Docket must be received on or before April 2, 2002.

ADDRESSES: Submit comments in triplicate to the Federal Aviation Administration (FAA), Office of the Regional Counsel, Southwest Region, Attention: Rules Docket No. 2001–SW–38–AD, 2601 Meacham Blvd., Room 663, Fort Worth, Texas 76137. You may also send comments electronically to the Rules Docket at the following address: 9-asw-adcomments@faa.gov.

FOR FURTHER INFORMATION CONTACT: Ed Cuevas, Aviation Safety Engineer, FAA, Rotorcraft Directorate, Regulations Group, Fort Worth, Texas 76193–0111, telephone (817) 222–5355, fax (817) 222–5961.

SUPPLEMENTARY INFORMATION: The Direction Generale De L'Aviation Civile (DGAC), the airworthiness authority for France, notified the FAA that an unsafe condition may exist on ECF Model SE 3130, SE 313B, SA 315B, SE 3160, SA 316B, SA 316C, SA 3180, SA 318B, SA 318C, and SA 319B helicopters with certain MGBs installed. The DGAC advises of the discovery of a crack on the bevel gear installed on an Alouette helicopter, which may cause failure of the MGB, subsequent loss of the main rotor drive, and an auto-rotation landing.

ECF has issued Alert Telex 01.67 and 01.32, dated April 20, 2001, and Alert Service Bulletins 01.32 and 01.67, both dated July 18, 2001, specifying a dye-penetrant inspection of both bevel gear faces in the coupling areas of the bevel gear and the bevel gear housing assembly of the MGB. The DGAC classified these service bulletins as mandatory and issued ADs 2001–149–044(A) R1, 2001–178–058(A) R1, and 2001–179–061(A) R1, all dated August 8, 2001, to ensure the continued airworthiness of these helicopters in France.

These helicopter models are manufactured in France and are type certificated for operation in the United States under the provisions of 14 CFR 21.29 and the applicable bilateral agreement. Pursuant to the applicable bilateral agreement, the DGAC has kept the FAA informed of the situation described above. The FAA has examined the findings of the DGAC, reviewed all available information, and determined that AD action is necessary for products of this type design that may operate in the United States.

This unsafe condition may exist or develop on other helicopters of the same type designs with these certain MGBs installed. We are issuing this AD to prevent failure of an MGB due to a cracked bevel gear, loss of the main rotor drive, and subsequent loss of control of the helicopter. This AD requires inspecting the MGB magnetic plug for metal particles at intervals not to exceed 10 hours TIS. This AD also requires, within 50 hours TIS, dye-penetrant inspecting the bevel gear for a crack and, if a crack is found, replacing the unairworthy bevel gear with an airworthy bevel gear before further flight. Replacing a cracked bevel gear is terminating action for the requirements of this AD.

None of the eight MGBs affected by this action are currently installed on helicopters on the U.S. Register. All helicopters included in the applicability of this rule that have an affected MGB installed are currently operated by non-U.S. operators under foreign registry; therefore, they are not directly affected by this AD action. However, the FAA considers that this rule is necessary to ensure that the unsafe condition is addressed in the event that any of these affected MGBs are imported and installed on helicopters on the U.S. Register in the future.

Should an affected MGB be imported and installed on a helicopter on the U.S. Register in the future, it would require approximately ½ work hour to review the records for a certain MGB. If the affected MGB is present, the FAA estimates that it would take 30 work hours per helicopter to inspect the bevel gear. The average labor rate is $60 per work hour. Required parts would cost approximately $14,500 per helicopter to replace a cracked bevel gear. Based on these figures, the total cost impact of this AD would be $16,330, assuming one helicopter requires replacement of the bevel gear.

Since this AD action does not affect any helicopter that is currently on the U.S. register, it has no adverse economic impact and imposes no additional burden on any person. Therefore, notice and public procedures hereon are unnecessary and the amendment may be made effective in less than 30 days after publication in the **Federal Register**.

Comments Invited

Although this action is in the form of a final rule that involves requirements affecting flight safety and, thus, was not preceded by notice and an opportunity for public comment, comments are invited on this rule. Interested persons are invited to comment on this rule by submitting such written data, views, or arguments as they may desire. Communications should identify the Rules Docket number and be submitted in triplicate to the address specified under the caption **ADDRESSES.** All communications received on or before the closing date for comments will be considered, and this rule may be amended in light of the comments received. Factual information that supports the commenter's ideas and suggestions is extremely helpful in evaluating the effectiveness of the AD action and determining whether additional rulemaking action would be needed.

Comments are specifically invited on the overall regulatory, economic, environmental, and energy aspects of the rule that might suggest a need to modify the rule. All comments submitted will be available in the Rules Docket for examination by interested persons. A report that summarizes each FAA-public contact concerned with the substance of this AD will be filed in the Rules Docket.

Commenters wishing the FAA to acknowledge receipt of their mailed comments submitted in response to this rule must submit a self-addressed, stamped postcard on which the following statement is made: ''Comments to Docket No. 2001–SW–38–AD.'' The postcard will be date stamped and returned to the commenter.

The regulations adopted herein will not have a substantial direct effect on the States, on the relationship between the national Government and the States, or on the distribution of power and responsibilities among the various levels of government. Therefore, it is determined that this final rule does not have federalism implications under Executive Order 13132.

The FAA has determined that notice and prior public comment are unnecessary in promulgating this regulation; therefore, it can be issued immediately to correct an unsafe condition in aircraft since none of these model helicopters are registered in the United States. The FAA has also determined that this regulation is not a ''significant regulatory action'' under Executive Order 12866. It has been determined further that this action involves an emergency regulation under DOT Regulatory Policies and Procedures (44 FR 11034, February 26, 1979). If it is determined that this emergency regulation otherwise would be significant under DOT Regulatory Policies and Procedures, a final regulatory evaluation will be prepared and placed in the Rules Docket. A copy of it, if filed, may be obtained from the Rules Docket at the location provided under the caption **ADDRESSES.**

List of Subjects in CFR Part 39

Air transportation, Aircraft, Aviation safety, Safety.

Adoption of the Amendment

Accordingly, pursuant to the authority delegated to me by the Administrator, the Federal Aviation Administration amends part 39 of the Federal Aviation Regulations (14 CFR part 39) as follows:

PART 39—AIRWORTHINESS DIRECTIVES

1. The authority citation for part 39 continues to read as follows:

Authority: 49 U.S.C. 106(g), 40113, 44701.

§ 39.13 [Amended]

2. Section 39.13 is amended by adding a new airworthiness directive to read as follows:

2002–01–30 Eurocopter France: Amendment 39–12625. Docket No. 20.1–SW–38–AD.

Applicability: Model SE 3130, SE 313B, SA 315B, SE 3160, SA 316B, SA 316C, SA 3180, SA 318B, SA 318C, and SA 319B, helicopters with a main gearbox (MGB), part number 319A62–00–000.4 with serial number M1242, M2194, M2516, NT3488, NT3563, 3–2888, 3–3091, or 3–11336, installed, certificated in any category.

Note 1: This AD applies to each helicopter identified in the preceding applicability provision, regardless of whether it has been otherwise modified, altered, or repaired in the area subject to the requirements of this AD. For helicopters that have been modified, altered, or repaired so that the performance of the requirements of this AD is affected, the owner/operator must request approval for an alternative method of compliance in accordance with paragraph (d) of this AD. The request should include an assessment of the effect of the modification, alteration, or repair on the unsafe condition addressed by this AD; and if the unsafe condition has not been eliminated, the request should include specific proposed actions to address it.

Compliance: Required as indicated, unless accomplished previously.

To prevent failure of the MGB due to a cracked bevel gear, loss of the main rotor drive, and subsequent loss of control of the helicopter, accomplish the following:

(a) At intervals not to exceed 10 hours time-in-service (TIS), inspect the MGB magnet plug for metal particles. This 10-hour inspection is in addition to those currently required by the maintenance manual.

(b) Within 50 hours TIS, dye-penetrant inspect both faces of the MGB bevel gear in the coupling area of the bevel gear shaft and in the coupling area of the bevel gear housing for a crack. If a crack is found, replace the unairworthy part with an airworthy part before further flight.

Note 2: Eurocopter France Alert Service Bulletins 01.32 and 01.67, both dated July 18, 2001, pertain to the subject of this AD.

(c) Completing the dye-penetrant inspection required by paragraph (b) of this AD and finding no cracks or replacing the bevel gear with an airworthy bevel gear is terminating action for the requirements of this AD.

(d) An alternative method of compliance or adjustment of the compliance time that provides an acceptable level of safety may be used if approved by the Manager, Regulations Group, Rotorcraft Directorate, FAA. Operators shall submit their requests through an FAA Principal Maintenance Inspector, who may concur or comment and then send it to the Manager, Regulations Group.

Note 3: Information concerning the existence of approved alternative methods of compliance with this AD, if any, may be obtained from the Regulations Group.

(e) Special flight permits may be issued in accordance with 14 CFR 21.197 and 21.199 to operate the helicopter to a location where the requirements of this AD can be accomplished.

(f) This amendment becomes effective on February 19, 2002.

Note 4: The subject of this AD is addressed in Direction Generale De L'Aviation Civile (France) ADs 2001–149–044(A) R1, 2001–178–058(A) R1, and 2001–179–061(A) R1, all dated August 8, 2001.

Issued in Fort Worth, Texas, on January 22, 2002.

Eric Bries,

Acting Manager, Rotorcraft Directorate, Aircraft Certification Service.

[FR Doc. 02–2423 Filed 1–31–02; 8:45 am]

BILLING CODE 4910–13–M

DEPARTMENT OF TRANSPORTATION

Federal Aviation Administration

14 CFR Part 39

[Docket No. 2001–SW–71–AD; Amendment 39–12627; AD 2001–26–54]

RIN 2120–AA64

Airworthiness Directives; Eurocopter France Model EC 155B Helicopters

AGENCY: Federal Aviation Administration, DOT.

ACTION: Final rule; request for comments.

SUMMARY: This document publishes in the **Federal Register** an amendment adopting Airworthiness Directive (AD) 2001–26–54, which was sent previously to all known U.S. owners and operators of Eurocopter France (ECF) Model EC 155B helicopters by individual letters. This AD requires, before further Instrument Flight Rule (IFR) flight, inserting a copy of the AD into the Limitations Section of the Rotorcraft Flight Manual (RFM) and replacing each affected Smart Multifunction Display (SMD45H) as specified. Removing the AD from the RFM is required after replacing each affected SMD45H. This AD is prompted by the discovery of an error in the assembly of an internal connector of the SMD45H that sometimes results in an inversion of the display information. The SMD45H provides the flightcrew with essential flight and navigation information. The actions specified by this AD are intended to prevent erroneous flight or

navigation display information, produced by a faulty SMD45H, and subsequent loss of control of the helicopter.

DATES: Effective February 19, 2002 to all persons except those persons to whom it was made immediately effective by Emergency AD 2001–26–54, issued on December 21, 2001, which contained the requirements of this amendment.

Comments for inclusion in the Rules Docket must be received on or before April 2, 2002.

ADDRESSES: Submit comments in triplicate to the Federal Aviation Administration (FAA), Office of the Regional Counsel, Southwest Region, Attention: Rules Docket No. 2001–SW–71–AD, 2601 Meacham Blvd., Room 663, Fort Worth, Texas 76137. You may also send comments electronically to the Rules Docket at the following address: 9-asw-adcomments@faa.gov.

FOR FURTHER INFORMATION CONTACT: Jorge Castillo, Aviation Safety Engineer, FAA, Rotorcraft Directorate, Rotorcraft Standards Staff, Fort Worth, Texas 76193–0110, telephone (817) 222–5127, fax (817) 222–5961.

SUPPLEMENTARY INFORMATION: On December 21, 2001, the FAA issued Emergency AD 2001–26–54 for ECF Model EC 155B which requires, before further IFR flight, inserting a copy of the AD into the Limitations Section of the RFM and replacing each affected SMD45H as specified. Removing the AD from the RFM is required after replacing each affected SMD45H. That action was prompted by the discovery of an error in the assembly of an internal connector of the SMD45H that sometimes results in an inversion of the display information. The SMD45H provides the flightcrew with essential flight and navigation information. The emergency AD was issued to prevent erroneous flight or navigation display information, produced by a faulty SMD45H, and subsequent loss of control of the helicopter.

The FAA has reviewed Eurocopter Alert Service Bulletin No. 04A002, dated October 3, 2001 (ASB). The ASB specifies, in order to resume IFR operation, to immediately replace certain SMD45Hs. The ASB also specifies affixing placards and inserting RFM supplements informing the pilot of display anomalies, certain restrictions, and certain limitations until all SMD45Hs have been replaced.

The Direction Generale De L'Aviation Civile (DGAC), the airworthiness authority for France, notified the FAA that an unsafe condition may exist on Eurocopter France Model EC 155B helicopters. The DGAC advises that sometimes an inversion of the symbols occurs on some of the SMD45Hs. The DGAC classified the ASB as mandatory and issued AD No. 2001–439–002(A)R1, dated October 31, 2001.

This helicopter model is manufactured in France and is type certificated for operation in the United States under the provision of 14 CFR 21.29 and the applicable bilateral agreement. Pursuant to this bilateral agreement, the DGAC has kept the FAA informed of the situation described above. The FAA has examined the findings of the DGAC, reviewed all available information, and determined that AD action is necessary for products of this type design that are certificated for operations in the United States.

Since the unsafe condition described is likely to exist or develop on other helicopters of the same type design, the FAA issued Emergency AD 2001–26–54 to prevent erroneous flight or navigation display information, produced by a faulty SMD45H, and subsequent loss of control of the helicopter. The AD requires, before further IFR flight, the following:

- Inserting a copy of the AD into the Limitations Section of the RFM to prohibit IFR flight until the affected SMD45Hs are replaced.
- Replacing each affected SMD45H with the corresponding SMD45Hs as specified in the AD.
- After replacing the SMD45Hs in accordance with the AD, removing the AD from the RFM.

Replacing each specified SMD45H and removing the AD from the RFM are terminating actions for the requirements of the AD. The short compliance time involved is required because the previously described critical unsafe condition can adversely affect the controllability of the helicopter. Therefore, the actions described previously are required before further IFR flight, and this AD must be issued immediately.

Since it was found that immediate corrective action was required, notice and opportunity for prior public comment thereon were impracticable and contrary to the public interest, and good cause existed to make the AD effective immediately by individual letters issued on December 21, 2001 to all known U.S. owners and operators of ECF Model EC 155B. These conditions still exist, and the AD is hereby published in the **Federal Register** as an amendment to 14 CFR 39.13 to make it effective to all persons.

The FAA estimates that 3 helicopters of U.S. registry will be affected by this AD, that it will take approximately 6 work hours per helicopter to replace each SMD45H, and that the average labor rate is $60 per work hour. The manufacturer has stated that they will provide the SMD45Hs at no cost. Based on these figures, the total cost impact of the AD on U.S. operators is estimated to be $1080 to replace a SMD45H on each affected helicopter.

Comments Invited

Although this action is in the form of a final rule that involves requirements affecting flight safety and, thus, was not preceded by notice and an opportunity for public comment, comments are invited on this rule. Interested persons are invited to comment on this rule by submitting such written data, views, or arguments as they may desire. Communications should identify the Rules Docket number and be submitted in triplicate to the address specified under the caption **ADDRESSES**. All communications received on or before the closing date for comments will be considered, and this rule may be amended in light of the comments received. Factual information that supports the commenter's ideas and suggestions is extremely helpful in evaluating the effectiveness of the AD action and determining whether additional rulemaking action would be needed.

Comments are specifically invited on the overall regulatory, economic, environmental, and energy aspects of the rule that might suggest a need to modify the rule. All comments submitted will be available in the Rules Docket for examination by interested persons. A report that summarizes each FAA-public contact concerned with the substance of this AD will be filed in the Rules Docket.

Commenters wishing the FAA to acknowledge receipt of their mailed comments submitted in response to this rule must submit a self-addressed, stamped postcard on which the following statement is made: ''Comments to Docket No. 2001–SW–71–AD.'' The postcard will be date stamped and returned to the commenter.

The regulations adopted herein will not have a substantial direct effect on the States, on the relationship between the national Government and the States, or on the distribution of power and responsibilities among the various levels of government. Therefore, it is determined that this final rule does not have federalism implications under Executive Order 13132.

The FAA has determined that this regulation is an emergency regulation that must be issued immediately to

correct an unsafe condition in aircraft, and that it is not a ''significant regulatory action'' under Executive Order 12866. It has been determined further that this action involves an emergency regulation under DOT Regulatory Policies and Procedures (44 FR 11034, February 26, 1979). If it is determined that this emergency regulation otherwise would be significant under DOT Regulatory Policies and Procedures, a final regulatory evaluation will be prepared and placed in the Rules Docket. A copy of it, if filed, may be obtained from the Rules Docket at the FAA, Office of the Regional Counsel, Southwest Region, 2601 Meacham Blvd., Room 663, Fort Worth, Texas.

List of Subjects in 14 CFR Part 39

Air transportation, Aircraft, Aviation safety, Safety.

Adoption of the Amendment

Accordingly, pursuant to the authority delegated to me by the Administrator, the Federal Aviation Administration amends part 39 of the Federal Aviation Regulations (14 CFR part 39) as follows:

PART 39—AIRWORTHINESS DIRECTIVES

1. The authority citation for part 39 continues to read as follows:

Authority: 49 U.S.C. 106(g), 40113, 44701.

§ 39.13 [Amended]

2. Section 39.13 is amended by adding a new airworthiness directive to read as follows:

2001 26–54 Eurocopter France: Amendment 39–12627. Docket No. 2001–SW–71–AD.

Applicability: Model EC 155B helicopters with a Smart Multifunction Display (SMD45H) as the primary flight display (PFD) or navigation display (ND), certificated in any category.

Note 1: This AD applies to each helicopter identified in the preceding applicability provision, regardless of whether it has been otherwise modified, altered, or repaired in the area subject to the requirements of this AD. For helicopters that have been modified, altered, or repaired so that the performance of the requirements of this AD is affected, the owner/operator must request approval for an alternative method of compliance in accordance with paragraph (e) of this AD. The request should include an assessment of the effect of the modification, alteration, or repair on the unsafe condition addressed by this AD; and if the unsafe condition has not been eliminated, the request should include specific proposed actions to address it.

Compliance: Required before further Instrument Flight Rule (IFR) flight, unless accomplished previously.

To prevent erroneous flight or navigation display information, produced by a faulty SMD45H, and subsequent loss of control of the helicopter, accomplish the following:

(a) Insert a copy of this AD into the Limitations Section of the Rotorcraft Flight Manual (RFM) to prohibit IFR flight until the old part-numbered SMD45Hs listed in Table 1 of this AD are replaced.

(b) Replace each old part-numbered SMD45H with the corresponding new part-numbered SMD45H as specified in Table 1 of this AD:

TABLE 1—RETROFIT KIT EC135–31A–002–2.C SMD45H

Old part number	New part number
(1) C19209VF11	C19209VG11
(2) C19267VF11	C19267VG11
(3) C19267EF10	C19267EG10

(c) After replacing the old part-numbered SMD45Hs in accordance with paragraph (b) of this AD, remove this AD from the RFM.

(d) Replacing each specified SMD45H and removing this AD from the RFM are terminating actions for the requirements of this AD.

(e) An alternative method of compliance or adjustment of the compliance time that provides an acceptable level of safety may be used if approved by the Manager, Regulations Group, Rotorcraft Directorate, FAA. Operators shall submit their requests through an FAA Principal Maintenance Inspector, who may concur or comment and then send it to the Manager, Regulations Group.

Note 2: Information concerning the existence of approved alternative methods of compliance with this AD, if any, may be obtained from the Regulations Group.

(f) Special flight permits will not be issued.

(g) This amendment becomes effective on February 19, 2002, to all persons except those persons to whom it was made immediately effective by Emergency AD 2001–26–54, issued December 21, 2001, which contained the requirements of this amendment.

Note 3: The subject of this AD is addressed in Direction Generale De L'Aviation Civile (France) AD No. 2001–439–002(A)R1, October 31, 2001.

Issued in Fort Worth, Texas, on January 17, 2002.

David A. Downey,

Manager, Rotorcraft Directorate, Aircraft Certification Service.

[FR Doc. 02–2425 Filed 1–31–02; 8:45 am]

BILLING CODE 4910–13–P

DEPARTMENT OF TRANSPORTATION

Federal Aviation Administration

14 CFR Part 71

[Airspace Docket No. 01–AWP–26]

Establishment of Class E Airspace; Kayenta, AZ

AGENCY: Federal Aviation Administration (FAA), DOT.

ACTION: Final rule.

SUMMARY: This action establishes a Class E airspace at Kayenta, AZ. The establishment of a Special Area Navigation (RNAV) Global Positing System (GPS) Standard Instrument Approach Procedure (SIAP) RNAV (GPS) Runway (RWY) 02 SIAP, RNAV (GPS) RWY 20 SIAP, and the existence of a Special Non-Directional Radio Beacon (NDB) SIAP at Bedard Field, Kayenta AZ has made action necessary. Additional controlled airspace extending upward from 700 feet or more above the surface of the earth is needed to contain aircraft executing the RNAV (GPS) RWY 02 SIAP, RNAV (GPS) RWY 20 SIAP and NDB SIAP to Bedard Field. The intended effect of this action is to provide adequate controlled airspace for Instrument Flight Rules operations at Bedard Field, Kayenta, AZ.

EFFECTIVE DATE: 0901 UTC February 21, 2002.

FOR FURTHER INFORMATION CONTACT: Jeri Carson, Airspace Specialist, Airspace Branch, AWP–520, Air Traffic Division, Western-Pacific Region, Federal Aviation Administration, 15000 Aviation Boulevard, Lawndale, California 90261, telephone (310) 725–6611.

SUPPLEMENTARY INFORMATION:

History

On November 7, 2001, the FAA proposed to amend 14 CFR part 71 by establishing a Class E airspace area at Kayenta, AZ (66 FR 56258). Additional controlled airspace extending upward from 700 feet or more above the surface is needed to contain aircraft executing the RNAV (GPS) RWY 02 SIAP, RNAV (GPS) RWY 20 SIAP, and a NBD SIAP at Bedard Field, Kayenta, AZ. This action will provide adequate controlled airspace for aircraft executing the RNAV (GPS) RWY 02 SIAP, RNAV (GPS) RWY 20 SIAP, and a NDB SIAP to Bedard Field, Kayenta, AZ.

Interested parties were invited to participate in this rulemaking proceeding by submitting written comments on the proposal to the FAA. No comments to the proposal were

received. Class E airspace designations for airspace extending from 700 feet or more above the surface of the earth are published in paragraph 6005 of FAA Order 7400.9J dated August 31, 2001, and effective September 16, 2001, which is incorporated by reference in 14 CFR 71.1. The Class E airspace designation listed in this document will be published subsequently in the Order.

The Rule

This amendment to 14 CFR part 71 establishes a Class E airspace area at Kayenta, CA. The establishment of a Special RNAV (GPS) RWY 02, RNAV (GPS) RWY 20 SIAP has made this action necessary. The effect of this action will provide adequate airspace for aircraft executing the RNAV (GPS) RWY 02, RNAV (GPS) RWY 20, and NDB SIAP at Bedard Field, Kayenta, AZ.

The FAA has determined that this regulation only involves an established body of technical regulations for which frequent and routine amendments are necessary to keep them operationally current. Therefore, this regulation—(1) is not a ''significant regulatory action'' under Executive Order 128660; (2) is not a ''significant rule'' under DOT Regulatory Policies and Procedures (44 FR 11034; February 26, 1979); and (3) does not warrant preparation of a Regulatory Evaluation as the anticipated impact is so minimal. Since this is a routine matter that will only affect air traffic procedures and air navigation, it is certified that this rule will not have a significant economic impact on a substantial number of small entities under the criteria of the Regulatory Flexibility Act.

List of Subjects in 14 CFR Part 71

Airspace, Incorporation by reference, Navigation (air).

Adoption of the Amendment

In consideration of the foregoing, the Federal Aviation Administration amends 14 CFR part 71 as follows:

PART 71—DESIGNATION OF CLASS A, CLASS B, CLASS C, CLASS D, AND CLASS E AIRSPACE AREAS; AIRWAYS; ROUTES; AND REPORTING POINTS

1. The authority citation for 14 CFR part 71 continues to read as follows:

Authority: 49 U.S.C. 106(g), 40103, 40113, 40120; E.O. 10854, 24 FR 9565, 3 CFR, 1959–1963 Comp., p. 389; 14 CFR 11.69.

§ 71.1 [Amended]

2. The incorporation by reference in 14 CFR 71.1 of the Federal Aviation Administration Order 7400.9J, Airspace Designations and Reporting Points, dated August 31, 2001, and effective September 16, 2001, is amended as follows:

Paragraph 6005 Class E airspace areas extending upward from 700 feet or more above the surface of the earth.

* * * * *

AWP AZ E5 Kayenta, AZ [NEW]

Bedard Field, AZ
(Lat. 36°28′18″N, long. 110°25′05″W)

That airspace extending upward from 700 feet above the surface within a 6.6 mile radius of the Bedard Field, and that airspace within 2.0 miles each side of the 219° bearing from the airport extending from the 6.6 mile radius to 10 miles southwest of Bedard Field, and that airspace within 1.0 mile each side of the 034° bearing from the airport extending from the 6.6 mile radius to 11 miles northeast of Bedard Field.

* * * * *

Issued in Los Angeles, California, on January 8, 2002.

John Clancy,

Manager Air Traffic Division, Western-Pacific Region.

[FR Doc. 02–2539 Filed 1–31–02; 8:45 am]

BILLING CODE 4910–13–M

DEPARTMENT OF TRANSPORTATION

Office of the Secretary

14 CFR Part 330

[Docket OST–2001–10885]

RIN 2105–AD06

Procedures for Compensation of Air Carriers

AGENCY: Office of the Secretary, DOT.

ACTION: Final rule; amendment.

SUMMARY: On September 22, 2001, President Bush signed into law the Air Transportation Safety and System Stabilization Act (''the Act''). The Act makes available to the President funds to compensate air carriers, as defined in the Act, for direct losses suffered as a result of any Federal ground stop order and incremental losses beginning September 11, 2001, and ending December 31, 2001, resulting from the September 11 terrorist attacks on the United States. In order to fulfill Congress' intent to expeditiously provide compensation to eligible air carriers, the Department used procedures set out in Program Guidance Letters to make initial estimated payments amounting to about 50 percent of the authorized funds. On October 29, 2001, the Department published a final rule and request for comments establishing application procedures for air carriers interested in requesting compensation under this statute. On January 2, 2002, the Department published amendments to the final rule responding to comments and establishing a deadline for submitting applications by indirect air carriers and wet lessors. This document further amends the final rule to allow additional time for indirect air carriers and wet lessors to submit applications for compensation.

DATES: This rule is effective February 1, 2002.

FOR FURTHER INFORMATION CONTACT: Steven Hatley, U.S. Department of Transportation, Office of International Aviation, 400 7th Street, SW., Room 6402, Washington, DC 20590. Telephone 202–366–1213.

SUPPLEMENTARY INFORMATION: As a consequence of the terrorist attacks on the United States on September 11, 2001, the U.S. commercial aviation industry suffered severe financial losses. These losses placed the financial survival of many air carriers at risk. Acting rapidly to preserve the continued viability of the U.S. air transportation system, President Bush sought and Congress enacted the Air Transportation Safety and System Stabilization Act (''the Act''), Public Law 107–42.

Under section 101(a)(2)(A–B) of the Act, a total of $5 billion in compensation is provided for ''direct losses incurred beginning on September 11, 2001, by air carriers as a result of any Federal ground stop order issued by the Secretary of Transportation or any subsequent order which continues or renews such stoppage; and the incremental losses incurred beginning September 11, 2001 and ending December 31, 2001, by air carriers as a direct result of such attacks.'' The Department of Transportation previously disbursed initial estimated payments of nearly $2.5 billion of the $5 billion amount that Congress authorized, using procedures set forth in the Department's Program Guidance Letters that were widely distributed and posted on the Department's web site.

On October 29, 2001 (66 FR 54616), the Department published in the **Federal Register** a final rule and request for comments to establish procedures for air carriers who had received or wished to receive compensation under the Act. On January 2, 2002 (67 FR 250), the Department published amendments to the final rule responding to comments and establishing a deadline for submitting requests for compensation by indirect air carriers and wet lessors. Under the amended

final rule, indirect air carriers and wet lessors could submit an application for compensation within 14 days of the January 2, 2002 publication date.

Request for Extension of Time

On January 16, 2002, the Department received a ''Request for Extension of Time to Submit Applications for Compensation Pursuant to 14 CFR Part 330'' from the New York/New Jersey Foreign Freight Forwarders and Brokers Association, Inc., the J.F.K. Airport Customs Broker Association Inc., and the South Florida Non-Vessel-Operating Common Carriers and Non-Aircraft-Operating Common Carriers Association, Inc. In the request, the Associations cite the lack of notice that indirect air carriers would be considered ''eligible'' for compensation and that 14 days is an inadequate amount of time to ''prepare, identify shipments (actual and lost), properly document all losses related to air cargo operations during the Act's stated time period (September 11 through December 31, 2001), and submit all required materials prior to the January 16, 2002 deadline.'' The Associations requested an extension through January 30, 2002.

DOT Response

After reviewing the request for extension of time, the Department has determined that a reasonable basis exists for extending the time period. First, although the compensation provisions of the Act had been implemented soon after its enactment, the Associations are correct that the first indication that indirect air carriers and wet lessors could be eligible for compensation—albeit under narrow circumstances—did not occur until January 2. Second, the Department is sensitive to the fact that small businesses may not have had the opportunity to thoroughly review the regulations and collect the necessary information within the 14 days provided. Third, extending the time period for indirect air carriers and wet lessors to submit a compensation application is consistent with the longer time period we gave air taxis (which are also primarily small businesses) to submit a compensation application. Finally, we believe that any potential prejudice to other carriers that have applied for compensation can be largely mitigated by proceeding with further payments of estimated compensation under the Act based on an estimate of the maximum number of revenue ton-miles (RTM) that could be reasonably claimed by both present and new applicants.

Accordingly, the Department hereby amends the final rule to allow an additional 7 calendar days from the date of this publication for indirect air carriers and wet lessors to submit a compensation application. However, we will adhere strictly to this new deadline. The Department will not accept late submissions unless an indirect air carrier or wet lessor demonstrates to the satisfaction of the Department that extremely unusual, extenuating circumstances, completely beyond its control, prevented it from making a timely submission and the Department determines that accepting the application is in the public interest.

Information Applicants Must Submit

Like all other applicants, indirect carriers and wet lessors (air carriers who provide ''lift'' to other air carriers under wet leases) applying under § 330.21(d), which is the section that contains the application deadline being extended today, should be careful to meet the documentation requirements of the regulations.

In administering the regulatory requirements, DOT is aware that the financial situations of some carriers may be extremely precarious, and that Congress intended they be afforded prompt action on their applications for relief. However, DOT must be scrupulous in assuring that public funds are disbursed in strict accord with statutory requirements. Thus, applicants should be aware that DOT will not process applications that fail to provide all of the information required. That information was set out in Part 330, and for all-cargo indirect air carriers and wet lessors, the data submission requirements of section 330.31 require particular attention.

A carrier that claims RTMs must document the RTMs generated for its own account, which was flown on its all-cargo flights, and it must identify the RTMs generated by other air carriers (under Aircraft, Crew, Maintenance, Insurance (ACMI) wet lease lift arrangements or other agreements). This information must be presented by carrier name and carrier code, with the number of RTMs clearly stated and segregated between RTMs generated by the claiming carrier and RTMs generated by other air carriers. Finally, applicants are again reminded that their applications must be accompanied by a certified statement, from the company's Chief Executive Officer, Chief Financial Officer, or Chief Operating Officer or, if those titles are not used, the equivalent officer, that the information was prepared under his or her supervision and is true and accurate under penalty of law. The claimant should also provide a similar certified statement from the other air carrier(s) stating that these RTMs were not claimed and will not be claimed by the other air carrier.

In meeting these requirements, applicants should especially ensure that written evidence is submitted that: (1) Demonstrates that the applicant meets the United States citizenship requirements to be an ''air carrier'' (49 U.S.C. § 40102); (2) clearly establishes the number of RTMs actually flown, segregated as necessary by the identity of the reporting carrier; (3) clearly establishes that the RTMs were generated on all-cargo flights only and not generated as ''belly cargo'' on combined passenger/cargo flights; [1] and (4) clearly establishes, in writing, both the carrier's entitlement to the RTMs and that no other carrier has claimed or will claim the RTMs.

Regulatory Analysis and Notices

This rule is an economically significant rule under Executive Order 12886, since it will facilitate the distribution of more than a billion dollars into the economy during the 12-month period following its issuance. Because of the need to move quickly to provide compensation to air carriers for the purpose of maintaining a safe, efficient, and viable commercial aviation system in the wake of the events of September 11, 2001, we are not required to provide an assessment of the potential cost and benefits of this regulatory action. The Department has determined that this rule is being issued in an emergency situation, within the meaning of Section 6(a)(3)(D) of Executive Order 12866. However, this impact is expected to be a favorable one: making these funds available to air carriers to compensate them for losses resulting from the terrorist attacks of September 11th.

Because a notice of proposed rulemaking is not required for this rulemaking under 5 U.S.C. 553, we are not required to prepare a regulatory flexibility analysis under 5 U.S.C. 604. However, we do note that this rule may have a significant economic effect on a substantial number of small entities. Among the entities in question are many indirect air carriers, wet lessors and air taxis, as well as some commuters and small certificated air carriers. In

[1] Congress set out separate eligibility schemes for passenger and cargo carriers, and included combined passenger-cargo flights within the passenger-only category. Compensation for passenger flights—including ''combi'' flights—is based upon available seat-miles, not RTMs, making it clear that Congress did not intend separate compensation for belly-cargo.

analyzing small entity impact for purposes of the Regulatory Flexibility Act, we believe that, to the extent that the rule impacts small air carriers, the impact will be a favorable one, since it will consist of receiving compensation. We have facilitated the participation of small entities in the program by allowing a longer application period for indirect air carriers, wet lessors and air taxis, which are generally the smallest carriers covered by this rule and which generally do not otherwise report traffic or financial data to the Department. The Department has also concluded that this rule does not have sufficient Federalism implications to warrant the consultation requirements of Executive Order 13132.

We are making this rule effective immediately, without prior opportunity for public notice and comment. Because of the need to move quickly to provide compensation to air carriers for the purpose of maintaining a safe, efficient, and viable commercial aviation system in the wake of the events of September 11, 2001, prior notice and comment would be impractical, unnecessary, and contrary to the public interest. Consequently, prior notice and comment under 5 U.S.C. 553 and delay of the effective date under 5 U.S.C. 801, *et seq.*, are not being provided. On the same basis, we have determined that there is good cause to make the rule effective immediately, rather than in 30 days.

The Office of Management and Budget has approved the information collection requirements of this rule, with Control Number 2105–0546.

List of Subjects in 14 CFR Part 330

Air carriers, Grant programs—transportation, Reporting and recordkeeping requirements.

Issued this 30th day of January, 2002, at Washington, DC.

Read C. Van de Water,

Assistant Secretary for Aviation and International Affairs.

For the reasons set forth in the preamble, the Department amends 14 CFR part 330 as follows:

PART 330—PROCEDURES FOR COMPENSATION OF AIR CARRIERS

1. Authority citation for Part 330 continues to read as follows:

Authority: Pub. L. 107–42, 115 Stat. 230 (49 U.S.C. 40101 note); sec. 124(d), Pub. L. 107–71, 115 Stat. 631 (49 U.S.C. 40101 note).

2. Revise § 330.21(d) introductory text to read as follows:

§ 330.21 When must air carriers apply for compensation?

* * * * *

(d) Notwithstanding any other provision of this section, if you are an eligible air carrier that did not submit an application or wishes to amend its application, you may do so by February 8, 2002 if you are one of the following:

* * * * *

[FR Doc. 02–2652 Filed 1–30–02; 4:57 pm]

BILLING CODE 4910–62–P

FEDERAL TRADE COMMISSION

16 CFR Part 303

Rules and Regulations Under the Textile Fiber Products Identification Act

AGENCY: Federal Trade Commission.

ACTION: Final rule.

SUMMARY: The Federal Trade Commission (''Commission'') announces amendments to rule 7 of the Rules and Regulations Under the Textile Fiber Products Identification Act (''Textile Rules''), to designate a new generic fiber name and establish a new generic fiber definition for a fiber manufactured by Cargill Dow, LLC (''Cargill Dow'') of Minnetonka, Minnesota. The amendments create a new subsection (y) to Rule 7 that establishes the name ''PLA'' for a fiber that Cargill Dow designates by the registered name ''Natureworks.''

EFFECTIVE DATE: February 1, 2002.

FOR FURTHER INFORMATION CONTACT: Neil Blickman, Attorney, Division of Enforcement, Federal Trade Commission, Washington, DC 20580; (202) 326–3038.

SUPPLEMENTARY INFORMATION:

I. Background

A. Statutory and Regulatory Framework

Section 4(b)(1) of the Textile Fiber Products Identification Act (''Act'') declares that a textile product will be misbranded unless it is labeled to show, among other elements, the percentages, by weight, of the constituent fibers in the product, designated by their generic names and in order of predominance by weight. 15 U.S.C. 70b(b)(1). Section 4(c) of the Act provides that the same information required by section 4(b)(1) (except the percentages) must appear in written advertisements if any disclosure or implication of fiber content is made regarding a covered textile product. 15 U.S.C. 70b(c). Section 7(c) directs the Commission to promulgate such rules, including the establishment of generic names of manufactured fibers, as are necessary to enforce the Act's directives. 15 U.S.C. 70e(c).

Rule 6 of the Textile Rules requires manufacturers to use the generic names of the fibers contained in their textile fiber products in making required disclosures of the fiber content of the products. 16 CFR 303.6. Rule 7 sets forth the generic names and definitions that the Commission has established for synthetic fibers. 16 CFR 303.7. Rule 8 sets forth the procedures for establishing new generic names. 16 CFR 303.8.

B. Procedural History

On August 28, 2000, Cargill Dow applied to the Commission for a new fiber name and definition.[1] Its application states that PLA fibers are synthetic but are derived from natural renewable resources (agricultural crops such as corn).[2] It maintained that PLA can combine certain advantages of natural fibers with those of certain synthetic fibers. Cargill Dow contended that its proprietary Natureworks PLA fiber, and PLA that may be made using alternative processes, have unique properties that, along with PLA's unique fundamental chemistry, differentiate PLA fibers from all other recognized and listed synthetic or natural fibers.

Contending that the unique chemistry of fibers made from PLA is inadequately described under existing generic names listed in the Textile Rules, Cargill Dow petitioned the Commission to establish a new generic name and definition. After an initial analysis, the Commission announced, on October 30, 2000, that it had issued Cargill Dow the designation ''CD 0001'' for temporary use in identifying PLA fiber pending a final determination as to the merits of the application for a new generic name and definition. The Commission staff further analyzed the application, and on November 17, 2000 (65 FR 69486), the Commission published a Notice of Proposed Rulemaking (''NPR'') detailing the technical aspects of Cargill Dow's fiber, and requesting public comment on Cargill Dow's application. On January 29, 2001, the comment period closed.

[1] This petition and additional information that Cargill Dow submitted are on the rulemaking record of this proceeding. This material, as well as the comments that were filed in this proceeding, are available for public inspection in accordance with the Freedom of Information Act, 5 U.S.C. 552, and the Commission's Rules of Practice, 16 CFR 4.11, at the Consumer Response Center, Public Reference Section, Room 130, Federal Trade Commission, 600 Pennsylvania Avenue, NW., Washington, DC. The comments that were filed are found under the Rules and Regulations Under the Textile Fiber Products Identification Act, 16 CFR part 303, Matter No. P948404, ''Cargill Dow Generic Fiber Petition Rulemaking.'' The comments also are available for viewing in electronic form at <<www.ftc.gov>>.

[2] PLA also is the acronym for the polymer from which the fiber is manufactured, namely polylactic acid or polylactide.

II. Description of the Fiber and Solicitation of Comments in the NPR

A. The Commission's Criteria for Granting a New Generic Fiber Name and Definition, and Related Issues

In the NPR, the Commission solicited comment on whether Cargill Dow's application meets the Commission's three criteria for granting petitions for new generic names:

1. The fiber for which a generic name is requested must have a chemical composition radically different from other fibers, and that distinctive chemical composition must result in distinctive physical properties of significance to the general public.
2. The fiber must be in active commercial use or such use must be immediately foreseen.
3. The grant of the generic name must be of importance to the consuming public at large, rather than to a small group of knowledgeable professionals such as purchasing officers for large government agencies.[3]

In the NPR, the Commission noted that repeat units of PLA are linked by ester groups, which means that PLA fiber is a polyester. The Commission agreed with Cargill Dow, however, that PLA does not fit into Rule 7's current definition of polyester. Therefore, the Commission requested public comment on whether to: (1) Broaden Rule 7's definition of polyester to include PLA fiber; (2) create a separate subcategory and definition for PLA fiber within Rule 7's definition of polyester; or (3) add a new generic fiber name and definition to Rule 7 for PLA fiber.

B. The NPR

1. Fiber Description and Proposed Name and Definition

The NPR provided a detailed description, taken from Cargill Dow's application, of PLA's chemical composition and physical and chemical properties.[4] Cargill Dow explained that PLA fibers typically are made using lactic acid as the starting material for polymer manufacture. The lactic acid comes from fermenting various sources of natural sugars. These sugars can come from annually renewable agricultural crops such as corn or sugar beets. Cargill Dow maintained that PLA's fundamental polymer chemistry allows control of certain fiber properties and makes the fiber suitable for a wide variety of technical textile fiber applications, especially apparel and performance apparel applications. Of most significance to consumers, Cargill Dow maintained that PLA fibers exhibit: (1) Low moisture absorption and high wicking, offering benefits for sports and performance apparel and products; (2) low flammability and smoke generation; (3) high resistance to ultra violet (UV) light, a benefit for performance apparel as well as outdoor furniture and furnishings applications; (4) a low index of refraction, which provides excellent color characteristics; and (5) lower specific gravity, making PLA lighter in weight than other fibers. In addition to coming from an annually renewable resource base, Cargill Dow stated that PLA fibers are readily melt-spun, offering manufacturing advantages that will result in greater consumer choice.

In the NPR, the Commission proposed the following fiber name and definition for PLA, which Cargill Dow had suggested:

> Synterra. A manufactured fiber in which the polymer is produced either (a) by the condensation of lactic acid or (b) by ring opening of the cyclic dimer, lactide, in both cases where at least 85% of the primary component is derived from a renewable resource as an integral part of the polymer chain.

In proposing this definition, the Commission noted Cargill Dow's statement that PLA used to make the fiber can be polylactic acid or polylactide. According to the company, although the lactide intermediate route used by Cargill Dow has proven most effective, direct condensation of lactic acid also will result in PLA.

2. Discussion of the Public Comments

The NPR elicited eight comments, including one from Cargill Dow.[5] Four commenters, Dystar UK Ltd, the National Corn Grower's Association, the Interface Research Corporation, and the Woolmark Company, as well as Cargill Dow, fully supported amending the Textile Rules to create a new, separate category in Rule 7 for PLA fiber and establishing a new generic fiber name and definition for Cargill Dow's fiber, as proposed by the Commission.[6] Two other commenters supported creating a new name and definition for PLA fiber, but had comments about the name and definition proposed in the NPR, as discussed below. Only one commenter, FSA, opposed creating a new name and definition for PLA.

FSA stated that PLA's physical properties and processing behavior indicate that it should be regarded as merely an advanced type of polyester with several benefits for the environment. In the NPR, although the Commission noted that the repeat units of PLA are linked by ester groups like polyester fibers, the Commission tentatively concluded that PLA fiber did not fit into the current definition for polyester in Rule 7.[7] PLA is an aliphatic polyhydroxycarboxylic acid, unlike other polyester fibers. In addition, PLA has a distinctly lower melting point and specific gravity than polyester fibers. It also appears to have better flame resistance qualities than polyester fibers. In light of PLA's unique chemical and physical properties, as well as seven other public comments, including the petitioner's, that supported creating a separate category in Rule 7 for PLA fiber, the Commission has determined not to amend the Rule to broaden the current definition for polyester in section 7(c) of the Rule to include PLA fiber.

With respect to the proposed name ''synterra,'' AFMA commented that as a result of two other commercial names now in use, consumer confusion could occur if the Commission adopted the proposed name. AFMA pointed out that ''sontara'' and ''sensura'' are trade names currently used by DuPont and Wellman Fibers, respectively, that apply to fibers, fabrics, and end-product uses similar to the anticipated uses for PLA fiber. The EC also commented that the proposed name, ''synterra,'' lacks sufficient reference to the chemical composition or physical properties of the fiber, and gives the impression of being a commercial trade name.

Finally, with respect to the new generic fiber definition, AFMA commented that the definition established by the Commission should be limited to a description of the fiber's chemical composition and should not include the method of manufacture.

---

[3] The Commission first announced these criteria on December 11, 1973 (38 FR 34112), and later clarified and reaffirmed them on December 6, 1995 (60 FR 62352), May 23, 1997 (62 FR 28342), and January 6, 1998 (63 FR 447 and 63 FR 449).

[4] 65 FR 69486, at 69487–69491 (Nov. 17, 2000). For brevity's sake, the Commission is providing a simplified description of the fiber in this notice, and refers those who wish to see detailed technical information about the fiber to the earlier description in the NPR.

[5] (1) American Fiber Manufacturers Association, Inc. (''AFMA''); (2) Dystar UK Ltd; (3) Keller and Heckman LLP on behalf of Cargill Dow; (4) National Corn Growers Association; (5) Interface Research Corporation; (6) Woolmark Company; (7) Finnish Standards Association (''FSA''); and (8) European Commission (''EC'').

[6] Cargill Dow's comment provides the Commission with the results of the consumer focus group research it sponsored. The report demonstrated that the focus group participants believed it would be most appropriate to place PLA in a separate fiber category.

[7] 65 FR 69486 (Nov. 17, 2000).

3. Discussion of the Three Criteria for Granting New Generic Names

a. Distinctive Chemical Composition and Physical Properties of Importance to the Public

The materials Cargill Dow submitted show that PLA fiber is based upon a distinctive chemical structure that is not encompassed by any existing definition in Rule 7. PLA's distinctive chemical structure results in a fiber that exhibits: low moisture absorption and high wicking, low flammability, high resistance to ultra violet light, a low index of refraction, and stability with respect to laundering and dry cleaning. In addition, the fiber comes from a renewable resource base. These properties are very important to those members of the general public who, for example, desire sports or performance apparel that is water-resistant and washable, or desire furnishings with low flammability. Thus, Cargill Dow's application meets this first criterion.

b. Active Commercial Use

Cargill Dow's petition stated that fibers produced from PLA have been made into finished goods that are ready to commercialize, and several are in test markets. When it filed its petition, Cargill Dow was in the process of building a plant in Blair, Nebraska, capable of producing approximately 30 million pounds per year of PLA. Counsel for Cargill Dow has informed Commission staff that the plant soon will be operational. Such a level of production for distribution satisfies this second criterion.

c. Importance to the Consuming Public

The Commission agrees with Cargill Dow that the granting of a generic name to describe PLA is of importance to the general public, and not just a few knowledgeable professionals such as purchasing officers for large government agencies. A new generic name will enable consumers to identify textile fiber products containing PLA (such as sports and performance apparel) that exhibit significant water-resistance, softer feel or ''hand,'' elasticity, shape retention, and improved comfort. Thus, Cargill Dow's application satisfies this third criterion.

4. Conclusion

Based on the foregoing, the Commission finds that Cargill Dow's fiber, PLA, is of a distinctive chemical composition not encompassed by any of the Textile Rules' existing generic definitions for manufactured fibers, that its physical properties are important to the public, that the fiber is in active commercial use, and that the granting of a new generic name and definition is important to the consuming public at large.

In light of the comments it received, the Commission has determined to adopt the generic name ''PLA'' to identify Cargill Dow's new manufactured fiber. The name ''PLA'' is used throughout Cargill Dow's application to identify its Natureworks fiber, and there is a precedent in the Rule, namely ''PBI,'' for adopting an acronym as a generic fiber name (16 CFR 303.7(u)). In addition, the Commission is not aware of any other aliphatic hydroxycarboxylic acid derived polymer currently being used to manufacture textile fibers. Accordingly, to avoid consumer confusion, and in the absence of any other suggested generic fiber names from the commenters or the petitioner, the Commission has determined to designate the generic name ''PLA'' for Cargill Dow's Natureworks fiber.

Further, the Commission agrees that it would be inappropriate to include methods of manufacture in the new generic fiber definition of PLA. There is no precedent for doing so in section 303.7 of the Rule, and, in the Commission's view, including methods of manufacture in the generic fiber definition would unduly limit industry research and innovation. Therefore, as a logical outgrowth of the fiber definition proposed in the NPR, the Commission has determined to define PLA generically in terms of its chemical composition.

Accordingly, in light of the materials and information submitted by Cargill Dow, as well as the public comments received during this proceeding, the Commission amends Rule 7 of the Textile Rules by adding the following new name and definition for Cargill Dow's fiber: PLA. A manufactured fiber in which the fiber-forming substance is composed of at least 85% by weight of lactic acid ester units derived from naturally occurring sugars.[8]

III. Effective Date

The Commission is making the amendments effective on February 1, 2002, as permitted by 5 U.S.C. 553(d), because the amendments do not create new obligations under the Rule; rather, they merely create a fiber name and definition that the public may use to comply with the Rule.

[8] The Commission notes that the definition of PLA it is adopting is consistent in form with, for example, the definition of Azlon, which is defined as a manufactured fiber in which the fiber-forming substance is composed of any regenerated naturally occurring proteins (16 CFR 303.7(g)).

IV. Regulatory Flexibility Act

In the NPR, the Commission tentatively concluded that the provisions of the Regulatory Flexibility Act relating to an initial regulatory analysis, 5 U.S.C. 603–604, did not apply to the proposal because the amendments, if promulgated, would not have a significant economic impact on a substantial number of small entities. The Commission believed that the proposed amendments would impose no additional obligations, penalties, or costs. The amendments simply would allow covered companies to use a new generic name for a new fiber that may not appropriately fit within current generic names and definitions, and would impose no additional labeling requirements. To ensure, however, that no substantial economic impact was overlooked, the Commission solicited public comment in the NPR on the effects of the proposed amendments on costs, profits, competitiveness of, and employment in small entities. 65 FR 69486, at 69491 (Nov. 17, 2000).

No comments were received on this issue. Accordingly, the Commission hereby certifies, pursuant to the Regulatory Flexibility Act, 5 U.S.C. 605(b), that the amendments promulgated today will not have a significant economic impact on a substantial number of small entities.

V. Paperwork Reduction Act

These amendments do not constitute ''collection[s] of information'' under the Paperwork Reduction Act of 1995, Pub. L. 104–13, 109 Stat. 163, 44 U.S.C. Chapter 35 (as amended), and its implementing regulations, 5 CFR 1320 *et seq.* Those procedures for establishing generic names that do constitute collections of information, 16 CFR 303.8, have been submitted to OMB, which has approved them and assigned them control number 3084–0101.

List of Subjects in 16 CFR Part 303

Labeling, Textile, Trade practices.

VI. Text of Amendments

For reasons set forth in the preamble, 16 CFR Part 303 is amended as follows:

PART 303—RULES AND REGULATIONS UNDER THE TEXTILE FIBER PRODUCTS IDENTIFICATION ACT

1. The authority citation for part 303 continues to read as follows:

Authority: Sec. 7(c) of the Textile Fiber Products Identification Act (15 U.S.C. 70e(c)).

2. In § 303.7, paragraph (y) is added, to read as follows:

§ 303.7 Generic names and definitions for manufactured fibers.

* * * * *

(y) *PLA.* A manufactured fiber in which the fiber-forming substance is composed of at least 85% by weight of lactic acid ester units derived from naturally occurring sugars.

By direction of the Commission.

Donald S. Clark,

Secretary.

[FR Doc. 02–2434 Filed 1–31–02; 8:45 am]

BILLING CODE 6750–01–P

DEPARTMENT OF HEALTH AND HUMAN SERVICES

Food and Drug Administration

21 CFR Parts 10, 201, 250, 290, 310, 329, 341, 361, 369, 606, and 610

[Docket No. 00N–0086]

Amendment of Regulations Regarding Certain Label Statements on Prescription Drugs

AGENCY: Food and Drug Administration, HHS.

ACTION: Final rule.

SUMMARY: The Food and Drug Administration (FDA) is amending its regulations concerning certain statements that have been required on the labels of prescription drugs generally and on certain narcotic or hypnotic (habit-forming) drugs. The agency is taking this action in accordance with provisions of the Food and Drug Administration Modernization Act of 1997 (Modernization Act).

DATES: This rule is effective April 2, 2002.

FOR FURTHER INFORMATION CONTACT:

For information regarding human drugs: Jerry Phillips, Center for Drug Evaluation and Research (HFD–400), Food and Drug Administration, 5600 Fishers Lane, Rockville, MD 20857, 301–827–3246.

For information regarding biologics: Robert A. Yetter, Center for Biologics Evaluation and Research (HFM–10), Food and Drug Administration, 1401 Rockville Pike, Rockville, MD 20852–1448, 301–827–0373.

SUPPLEMENTARY INFORMATION:

I. Background

On November 21, 1997, the Modernization Act (Public Law 105–115) was signed into law. Section 126 of the Modernization Act amended section 503(b)(4) of the Federal Food, Drug, and Cosmetic Act (the act) (21 U.S.C. 353(b)(4)) to require, at a minimum, that, prior to dispensing, the label of prescription drugs bear the symbol ''Rx only'' instead of the statement ''Caution: Federal law prohibits dispensing without prescription.'' The new label statement may be printed as either ''Rx only'' or ''℞ only.'' Section 126 of the Modernization Act also repealed section 502(d) of the act (21 U.S.C. 352(d)), which provided that a drug or device containing certain enumerated narcotic or hypnotic (habit-forming) substances or their derivatives was misbranded unless its label bore the name and quantity of the substance and the statement ''Warning—May be habit forming.'' In the **Federal Register** of April 21, 2000 (65 FR 21378), FDA proposed amending its regulations to implement these provisions of the Modernization Act.

II. Highlights of the Final Rule

The agency is finalizing without change the regulatory provisions of the proposed rule.

- The final rule amends parts 10, 201, 250, 310, 329, 361, 606, and 610 (21 CFR parts 10, 201, 250, 310, 329, 361, 606, and 610) by removing the requirement that prescription drugs be labeled with ''Caution: Federal law prohibits dispensing without prescription'' and adding in its place a requirement that prescription drugs be labeled with ''Rx only'' or ''℞ only.''
- The final rule amends parts 201 and 369 (21 CFR part 369) by removing the requirement that certain habit-forming drugs bear the statement ''Warning—May be habit forming.''
- The final rule removes part 329, Habit-Forming Drugs.
- The final rule amends part 290 (21 CFR part 290) by adding new §§ 290.1 and 290.2. Section 290.1 is being added to make clear the agency's determination that a drug that is a controlled substance listed in schedule II, III, IV, or V of the Federal Controlled Substances Act (CSA) or implementing regulations must, unless otherwise determined by the agency, be dispensed by prescription only as required by section 503(b)(1) of the act. Section 290.2 retains the exemption from the prescription-dispensing requirement in § 329.20 for small amounts of codeine in combination with other nonnarcotic active medicinal ingredients.

III. Comments on the Proposed Rule

The agency received three comments from pharmaceutical companies and one comment from an association of pharmacists.

(1). All four comments concerned the appearance of the ''Rx only'' statement on the label. In the proposed rule, the ℞ symbol appeared in bold because of type-setting limitations. FDA did not want to create the impression that it was proposing to require the ℞ symbol to appear in bold. In an attempt at clarification, a footnote was included in the proposed rule stating: ''The ℞ symbol appears in bold in this document because of type-setting limitations, however, it should not be bolded when used on the product's label'' (65 FR 21378). Two comments objected to this apparent prohibition against the use of bolding, noting that the implementing guidance discussed in section IV of this document did not prescribe whether or not the ℞ symbol or the Rx only statement generally should appear in bold. FDA agrees with these comments. The ℞ symbol and the Rx only statement may be printed in bold or in regular type.

(2). In the implementing guidance, FDA stated: ''The statement should be prominent and conspicuous, as is required by section 502(c) of the Act and 21 CFR 201.15.'' One comment suggested that manufacturers should not be permitted to determine what placement on the label is prominent and conspicuous. The comment asked that FDA require that the Rx only statement appear on the main part of the label and also that FDA establish a minimum font size for the Rx only statement relative to the other text on the label.

FDA declines to adopt this suggestion. Section 502(c) of the act provides that a drug or device is misbranded if a label statement required by the act or FDA regulations * * * ''is not prominently placed thereon with such conspicuousness (as compared with other words, statements, designs, or devices, in the labeling) and in such terms as to render it likely to be read and understood by the ordinary individual under customary conditions of purchase and use.'' FDA's regulation at § 201.15 elaborates on specific factors that could render a label statement not prominent and conspicuous. This regulation applies to the Rx only statement, and thus requirements specific to the Rx only statement are unnecessary.

(3). One comment objected to the agency's position, expressed in the implementing guidance, that manufacturers are not prohibited from using the ''Warning—May be habit forming'' statement. The Modernization Act removed the requirement that the labels of habit-forming drugs bear this statement, but did not prohibit use of the statement. However, as explained in

the guidance, FDA believes that the habit-forming characteristics of a drug product should be adequately described in the ''Drug Abuse and Dependence'' section of the package insert and that further labeled warnings are not necessary.

IV. Implementation

A guidance for industry entitled ''Implementation of Section 126 of the Food and Drug Administration Modernization Act of 1997—Elimination of Certain Labeling Requirements'' (63 FR 39100, July 21, 1998) is available on the Internet at http://www.fda. gov/cder/guidance/index.htm or http://www.fda.gov/cber/guidelines.htm. The guidance indicates that, for the time periods and under the circumstances stated below, in the exercise of its enforcement discretion, FDA does not intend to object if a sponsor does not comply with the new labeling requirements of section 126 of the Modernization Act. The guidance advises that FDA does not intend to object if sponsors of certain currently approved products implement the new requirements of section 126 of the Modernization Act at the time of the next revision of their labels, or by February 19, 2003, whichever comes first, and report these minor changes in the next annual report. For pending (unapproved) full or abbreviated applications received by the agency prior to February 19, 1998, sponsors should comply with the new labeling requirements by the time of the next revision of their labels or by February 19, 2003, whichever comes first. The guidance also advises that full or abbreviated applications received by FDA after February 19, 1998, should provide labels and labeling in compliance with the new labeling requirements.

V. Environmental Impact

The agency has determined under 21 CFR 25.30(k) that this action is of a type that does not individually or cumulatively have a significant effect on the human environment. Therefore, neither an environmental assessment nor an environmental impact statement is required.

VI. Analysis of Impacts

FDA has examined the impacts of the final rule under Executive Order 12866 and the Regulatory Flexibility Act (5 U.S.C. 601–612). Executive Order 12866 directs agencies to assess all costs and benefits of available regulatory alternatives and, when regulation is necessary, to select regulatory approaches that maximize net benefits (including potential economic, environmental, public health and safety, and other advantages; distributive impacts; and equity). The agency believes that this final rule is consistent with the regulatory philosophy and principles identified in the Executive order. As described in section IV of this document, the agency's guidance document explains that FDA will exercise its enforcement discretion in a manner that will permit companies to implement the required label changes at the time of the next revision of their labels, or by February 19, 2003, whichever comes first. Because almost all labels would typically be reprinted within this timeframe, this enforcement strategy will eliminate any significant costs that would otherwise be associated with the rule. As a result, the final rule is not a significant regulatory action as defined by the Executive order.

The Regulatory Flexibility Act requires agencies to analyze regulatory options to minimize any significant impact of a rule on a substantial number of small entities. The agency certifies that the final rule would not have a significant impact on a substantial number of small entities because the lengthy implementation period will allow companies to make the necessary label changes during the normal course of business. Therefore, under the Regulatory Flexibility Act, no further analysis is required. Section 202(a) of the Unfunded Mandates Reform Act (Public Law 104–4) requires that agencies prepare an assessment of anticipated costs and benefits before proposing any rule that may result in an expenditure by State, local, and tribal governments, in the aggregate, or by the private sector, of $100 million or more in any one year (adjusted annually for inflation). Because this rule does not impose any mandates on State, local, or tribal governments, or the private sector that will result in an expenditure of $100 million or more in any one year, FDA is not required to perform a cost-benefit analysis under the Unfunded Mandates Reform Act.

VII. Paperwork Reduction Act of 1995

FDA concludes that this final rule does not require information collections subject to review by the Office of Management and Budget (OMB) under the Paperwork Reduction Act of 1995 (the PRA) (Public Law 104–13).

FDA is amending its labeling regulations by removing the requirement that prescription drugs be labeled with ''Caution: Federal law prohibits dispensing without prescription'' and adding a requirement that prescription drugs be labeled with ''Rx only'' or ''℞ only.'' This labeling statement is not subject to review by OMB because it is ''originally supplied by the Federal Government to the recipient for the purpose of disclosure to the public'' (5 CFR 1320.3(c)(2)) and therefore does not constitute a ''collection of information'' under the PRA.

VIII. Executive Order 13132: Federalism

FDA has analyzed this final rule in accordance with Executive Order 13132: Federalism. Executive Order 13132 requires Federal agencies to carefully examine actions to determine if they contain policies that have federalism implications or that preempt existing State law. As defined in the Order, ''policies that have federalism implications'' refers to regulations, legislative comments or final legislation, and other policy statements or actions that have substantial direct effects on the States, on the relationship between the National Government and the States or on the distribution of power and responsibilities among the various levels of government.

This final rule revises FDA labeling regulations as required by the Modernization Act. Because enforcement of these labeling provisions is a Federal responsibility, there should be little, if any, impact from this rule on the States, on the relationship between the National Government and the States, or on the distribution of power and responsibilities among the various levels of government. In addition, FDA does not believe that this final rule preempts any existing State law.

Accordingly, FDA has determined that this final rule does not contain policies that have federalism implications.

List of Subjects

21 CFR Part 10

Administrative practice and procedure, News media.

21 CFR Part 201

Drugs, Labeling, Reporting and recordkeeping requirements.

21 CFR Part 250

Drugs.

21 CFR Parts 290 and 329

Drugs, Labeling.

21 CFR Part 310

Administrative practice and procedure, Drugs, Labeling, Medical devices, Reporting and recordkeeping requirements.

21 CFR Part 341

Labeling, Over-the-counter drugs.

21 CFR Part 361

Medical research, Prescription drugs, Radiation protection.

21 CFR Part 369

Labeling, Medical devices, Over-the-counter drugs.

21 CFR Part 606

Blood, Labeling, Laboratories, Reporting and recordkeeping requirements.

21 CFR Part 610

Biologics, Labeling, Reporting and recordkeeping requirements.

Therefore, under the Federal Food, Drug, and Cosmetic Act, the Public Health Service Act, and the Food and Drug Administration Modernization Act, and under authority delegated to the Commissioner of Food and Drugs, chapter I of Title 21 is amended as follows:

PART 10—ADMINISTRATIVE PRACTICES AND PROCEDURES

1. The authority citation for 21 CFR part 10 continues to read as follows:

Authority: 5 U.S.C. 551–558, 701–706; 15 U.S.C. 1451–1461; 21 U.S.C. 141–149, 321–397, 467f, 679, 821, 1034; 28 U.S.C. 2112; 42 U.S.C. 201, 262, 263b, 264.

§ 10.50 [Amended]

2. Section 10.50 *Promulgation of regulations and orders after an opportunity for a formal evidentiary public hearing* is amended by removing and reserving paragraph (c)(7).

PART 201—LABELING

3. The authority citation for 21 CFR part 201 continues to read as follows:

Authority: 21 U.S.C. 321, 331, 351, 352, 353, 355, 358, 360, 360b, 360gg–360ss, 371, 374, 379e; 42 U.S.C. 216, 241, 262, 264.

§ 201.10 [Amended]

4. Section 201.10 *Drugs; statement of ingredients* is amended in paragraph (a) by removing the phrase ''as 'Warning—May be habit forming' ''.

5. Section 201.16 is revised to read as follows:

§ 201.16 Drugs; Spanish-language version of certain required statements.

An increasing number of medications restricted to prescription use only are being labeled solely in Spanish for distribution in the Commonwealth of Puerto Rico where Spanish is the predominant language. Such labeling is authorized under § 201.15(c). One required warning, the wording of which is fixed by law in the English language, could be translated in various ways, from literal translation to loose interpretation. The statutory nature of this warning requires that the translation convey the meaning properly to avoid confusion and dilution of the purpose of the warning. Section 503(b)(4) of the Federal Food, Drug, and Cosmetic Act requires, at a minimum, that the label bear the statement ''Rx only.'' The Spanish-language version of this must be ''Solamente Rx''.

§ 201.100 [Amended]

6. Section 201.100 *Prescription drugs for human use* is amended in paragraph (b)(1) by removing the phrase '' 'Caution: Federal law prohibits dispensing without prescription' '' and by adding in its place the phrase '' 'Rx only' ''.

§ 201.120 [Amended]

7. Section 201.120 *Prescription chemicals and other prescription components* is amended in paragraph (b)(2) by removing the phrase '' 'Caution: Federal law prohibits dispensing without prescription' '' and by adding in its place the phrase '' 'Rx only' ''.

§ 201.122 [Amended]

8. Section 201.122 *Drugs for processing, repacking, or manufacturing* is amended in the first sentence of the introductory text by removing the phrase '' 'Caution: Federal law prohibits dispensing without prescription' '' and by adding in its place the phrase '' 'Rx only' ''.

§ 201.306 [Amended]

9. Section 201.306 *Potassium salt preparations intended for oral ingestion by man* is amended in paragraph (b)(1) by removing the word ''caution''.

PART 250—SPECIAL REQUIREMENTS FOR SPECIFIC HUMAN DRUGS

10. The authority citation for 21 CFR part 250 continues to read as follows:

Authority: 21 U.S.C. 321, 336, 342, 352, 353, 355, 361(a), 362(a) and (c), 371, 375(b).

§ 250.100 [Amended]

11. Section 250.100 *Amyl nitrate inhalant as a prescription drug for human use* is amended in paragraph (b) by removing the phrase ''legend 'Caution: Federal law prohibits dispensing without prescription.' '' and by adding in its place the phrase ''statement 'Rx only.' ''.

§ 250.101 [Amended]

12. Section 250.101 *Amphetamine and methamphetamine inhalers regarded as prescription drugs* is amended in paragraph (b) by removing the phrase ''legend 'Caution: Federal law prohibits dispensing without prescription.' '' and by adding in its place the phrase ''statement 'Rx only.' ''.

§ 250.105 [Amended]

13. Section 250.105 *Gelsemium-containing preparations regarded as prescription drugs* is amended in the last sentence by removing the phrase '' 'Caution: Federal law prohibits dispensing without prescription.' '' and by adding in its place the phrase '' 'Rx only.' ''.

§ 250.108 [Amended]

14. Section 250.108 *Potassium permanganate preparations as prescription drugs* is amended in paragraph (c)(1) by removing the phrase ''legend, 'Caution: Federal law prohibits dispensing without prescription.' '' and by adding in its place the phrase ''statement 'Rx only.' '' and in paragraph (c)(2) by removing the phrase '', 'Caution: Federal law prohibits dispensing without prescription.' '' and by adding in its place the phrase '' 'Rx only.' ''.

§ 250.201 [Amended]

15. Section 250.201 *Preparations for the treatment of pernicious anemia* is amended in paragraph (d) by removing the phrase ''legend 'Caution—Federal law prohibits dispensing without prescription.' '' and by adding in its place the phrase ''statement 'Rx only.' ''.

§ 250.250 [Amended]

16. Section 250.250 *Hexachlorophene, as a component of drug and cosmetic products* is amended in the last sentence of paragraph (c)(1) by removing the phrase ''legend 'Caution: Federal law prohibits dispensing without a prescription,' '' and by adding in its place the phrase ''statement 'Rx only,' '' and in paragraph (c)(4)(i) by removing the phrase ''prescription legend'' and by adding in its place the phrase ''statement 'Rx only' ''.

PART 290—CONTROLLED DRUGS

17. The authority citation for 21 CFR part 290 continues to read as follows:

Authority: 21 U.S.C. 352, 353, 355, 371.

18. Section 290.1 is added to subpart A to read as follows:

§ 290.1 Controlled substances.

Any drug that is a controlled substance listed in schedule II, III, IV, or V of the Federal Controlled Substances Act or implementing regulations must be dispensed by prescription only as required by section 503(b)(1) of the

Federal Food, Drug, and Cosmetic Act unless specifically exempted in § 290.2.

19. Section 290.2 is added to subpart A to read as follows:

§ 290.2 Exemption from prescription requirements.

The prescription-dispensing requirements of section 503(b)(1) of the Federal Food, Drug, and Cosmetic Act are not necessary for the protection of the public health with respect to a compound, mixture, or preparation containing not more than 200 milligrams of codeine per 100 milliliters or per 100 grams that also includes one or more nonnarcotic active medicinal ingredients in sufficient proportion to confer upon the compound, mixture, or preparation valuable medicinal qualities other than those possessed by codeine alone.

PART 310—NEW DRUGS

20. The authority citation for 21 CFR part 310 continues to read as follows:

Authority: 21 U.S.C. 321, 331, 351, 352, 353, 355, 360b–360f, 360j, 361(a), 371, 374, 375, 379e; 42 U.S.C. 216, 241, 242(a), 262, 263b–263n.

§ 310.103 [Amended]

21. Section 310.103 *New drug substances intended for hypersensitivity testing* is amended in paragraph (a)(3)(i) by removing the phrase '' 'Caution: Federal law prohibits dispensing without a prescription' '' and by adding in its place the phrase '' 'Rx only' ''.

PART 329—HABIT FORMING DRUGS

22. Part 329 is removed.

PART 341—COLD, COUGH, ALLERGY, BRONCHODILATOR, AND ANTIASTHMATIC DRUG PRODUCTS FOR OVER-THE-COUNTER HUMAN USE

23. The authority citation for 21 CFR part 341 continues to read as follows:

Authority: 21 U.S.C. 321, 351, 352, 353, 355, 360, 371.

§ 341.14 [Amended]

24. Section 341.14 *Antitussive active ingredients* is amended in paragraph (a)(2) by removing ''§§ 329.20(a) and 341.40'' and by adding in its place ''§ 290.2''.

PART 361—PRESCRIPTION DRUGS FOR HUMAN USE GENERALLY RECOGNIZED AS SAFE AND EFFECTIVE AND NOT MISBRANDED: DRUGS USED IN RESEARCH

25. The authority citation for 21 CFR part 361 continues to read as follows:

Authority: 21 U.S.C. 321, 351, 352, 353, 355, 371; 42 U.S.C. 262.

§ 361.1 [Amended]

26. Section 361.1 *Radioactive drugs for certain research uses* is amended in paragraph (f)(1) by removing the phrase '' 'Caution: Federal law prohibits dispensing without prescription' '' and by adding in its place the phrase '' 'Rx only' ''.

PART 369—INTERPRETATIVE STATEMENTS RE WARNINGS ON DRUGS AND DEVICES FOR OVER-THE-COUNTER SALE

27. The authority citation for 21 CFR part 369 continues to read as follows:

Authority: 21 U.S.C. 321, 331, 351, 352, 353, 355, 371.

§ 369.22 [Removed]

28. Section 369.22 is removed.

PART 606—CURRENT GOOD MANUFACTURING PRACTICE FOR BLOOD AND BLOOD COMPONENTS

29. The authority citation for 21 CFR part 606 continues to read as follows:

Authority: 21 U.S.C. 321, 331, 351, 352, 355, 360, 360j, 371, 374; 42 U.S.C. 216, 262, 263a, 264.

30. Section 606.121 is amended by revising paragraph (c)(8)(i) to read as follows:

§ 606.121 Container label.

* * * * *

(c) * * *

(8) * * *

(i) ''Rx only.''

* * * * *

PART 610—GENERAL BIOLOGICAL PRODUCTS STANDARDS

31. The authority citation for 21 CFR part 610 continues to read as follows:

Authority: 21 U.S.C. 321, 351, 352, 353, 355, 360, 371; 42 U.S.C. 216, 262, 263, 263a, 264.

§ 610.60 [Amended]

32. Section 610.60 *Container label* is amended in paragraph (a)(6) by removing the phrase '' 'Caution: Federal law prohibits dispensing without prescription,' '' and by adding in its place the phrase '' 'Rx only' ''.

§ 610.61 [Amended]

33. Section 610.61 *Package label* is amended in paragraph (s) by removing the phrase '' 'Caution: Federal law prohibits dispensing without prescription,' '' and by adding in its place the phrase '' 'Rx only' ''.

Dated: January 28, 2002.

Margaret M. Dotzel,

Associate Commissioner for Policy.

[FR Doc. 02–2548 Filed 1–31–02; 8:45 am]

BILLING CODE 4160–01–S

DEPARTMENT OF THE TREASURY

Internal Revenue Service

26 CFR Part 1

[TD 8982]

RIN 1545–AY19

Definition of Disqualified Person

AGENCY: Internal Revenue Service (IRS), Treasury.

ACTION: Final regulations.

SUMMARY: This document contains final regulations narrowing the definition of the term disqualified person for section 1031 like-kind exchanges. The amendments in the regulations are in response to recent changes in the federal banking law, especially the repeal of section 20 of the Banking Act of 1933 (commonly referred to as the Glass-Steagall Act). The regulations will affect the eligibility of certain persons to serve as escrow holders of qualified escrow accounts, trustees of qualified trusts, and qualified intermediaries.

DATES: *Effective Date:* These regulations are effective February 1, 2002.

Dates of Applicability: These regulations apply to transfers of property made by a taxpayer on or after January 17, 2001.

FOR FURTHER INFORMATION CONTACT: Brendan O'Hara, (202) 622–4920 (not a toll-free number).

SUPPLEMENTARY INFORMATION:

Background

This document contains amendments to the Income Tax Regulations (26 CFR Part 1) under § 1.1031(k)–1. On January 17, 2001, the IRS and Treasury Department published in the **Federal Register** a notice of proposed rulemaking under section 1031 (66 FR 3924). The notice proposed to amend § 1.1031(k)–1(k) by narrowing the definition of the term *disqualified person.* Comments responding to the notice were received, and a public hearing was held on June 5, 2001. After considering the comments received in response to the notice of proposed rulemaking and the statements made at the public hearing, the proposed regulations are adopted as revised by this Treasury decision. The comments and revisions are discussed below.

Explanation of Provisions

Under section 1031 and the regulations thereunder, taxpayers may use a qualified escrow account, qualified trust, or qualified intermediary to facilitate a like-kind exchange. A requirement common to qualified escrow accounts, qualified trusts, and qualified intermediaries is that the escrow holder, trustee, or intermediary may not be the taxpayer or a disqualified person.

Section 1.1031(k)–1(k) defines a disqualified person to include an agent of the taxpayer at the time of the transaction. An agent includes a person that has acted as the taxpayer's employee, attorney, accountant, investment banker or broker, or real estate agent or broker within two years of the taxpayer's transfer of relinquished property. However, in determining whether a person is a disqualified person, services provided by such person for the taxpayer with respect to section 1031 exchanges of property and routine financial, title insurance, escrow, or trust services provided to the taxpayer by a financial institution, title insurance company, or escrow company are not taken into account. Under § 1.1031(k)–1(k)(4), a person that is related to a disqualified person, determined by using the attribution rules of sections 267(b) and 707(b), but substituting 10 percent for 50 percent, is also considered a disqualified person.

As a consequence of the Gramm-Leach-Bliley Act, Public Law 106–102 (Nov. 12, 1999), 113 Stat. 1341, and other changes in policy by the Federal Reserve System in recent years, many banks are, or are in the process of becoming, members of controlled groups that include investment banking and brokerage firms. These new relationships between banks and investment banking and brokerage firms may make it difficult for some banks to continue their traditional practices of providing qualified escrow, qualified trust, and qualified intermediary services without violating the disqualified person rules. To allow banks to continue to perform these services, the proposed regulations provide that a bank that is a member of a controlled group that includes an investment banking or brokerage firm as a member will not be a disqualified person merely because the related investment banking or brokerage firm provided services to an exchange customer within a two-year period ending on the date of the transfer of the relinquished property by that customer.

Treasury and the IRS received several comments on the proposed regulations. Some commentators argued that the proposed exception to the disqualified person rules would not fulfill its intended purpose, because most banks use non-bank subsidiaries or affiliates to serve as escrow holders of qualified escrow accounts, trustees of qualified trusts, or qualified intermediaries. These commentators recommended that the proposed exception be extended to apply to subsidiaries and affiliates of banks. In response to these comments, the final regulations extend the proposed exception to bank affiliates as well as banks. For this purpose, a bank affiliate is a non-bank corporation whose principal activity is rendering services to facilitate exchanges of property intended to qualify for nonrecognition of gain under section 1031 and all of whose outstanding stock is owned by either a bank or a bank holding company (within the meaning of section 2(a) of the Bank Holding Company Act of 1956, 12 U.S.C. 1841(a)).

Some commentators noted the discrepancy between the effective date set forth in the text of the proposed regulations (i.e., applicable to transfers of relinquished property on or after the date of the final regulations) and the effective date set forth in the Preamble to those regulations (i.e., applicable to transfers of relinquished property on or after January 17, 2001). In response to the comments, the final regulations adopt the earlier of the two effective dates, and thus apply in the case of transfers of relinquished property made by a taxpayer on or after January 17, 2001.

Other commentators expressed opposition to the proposed regulations, requesting that the regulations be withdrawn. The commentators maintained that the existing regulations provide adequate exceptions to the definition of disqualified person, and that an exception for the banking industry will erode the integrity and purpose of the disqualified person concept.

Treasury and the IRS continue to believe that the amendment to the regulations is appropriate and necessary for the reasons articulated in the Preamble to the proposed regulations. Banks and their affiliates are closely regulated institutions that have historically acted as neutral and independent holders of funds. Treasury and the IRS do not believe that recent changes to federal banking laws are likely to impinge on this role to any significant degree.

Finally, one commentator requested that the final regulations include the exception from the disqualified person rule set forth in section 3.03 of Rev. Proc. 2000–37 (2000–40 I.R.B. 308). Rev. Proc. 2000–37, published to facilitate reverse like-kind exchanges, provides a safe harbor for the qualification under section 1031 of certain arrangements between taxpayers and exchange accommodation titleholders and provides for the treatment of the exchange accommodation titleholder as the beneficial owner of the property for federal income tax purposes. Section 3.03 of the revenue procedure provides that services performed for the taxpayer in connection with a person's role as the exchange accommodation titleholder are not taken into account in determining whether that person or a related person is a disqualified person. Treasury and the IRS do not believe that this rule needs to be restated in these regulations. Consequently, the final regulations do not include the exception from the disqualified person rule set forth in Rev. Proc. 2000–37.

Special Analyses

It has been determined that this Treasury decision is not a significant regulatory action as defined in Executive Order 12866. Therefore, a regulatory assessment is not required. It has also been determined that section 553(b) of the Administrative Procedure Act (5 U.S.C. chapter 5) does not apply to these regulations, and because these regulations do not impose a collection of information on small entities, the Regulatory Flexibility Act (5 U.S.C. chapter 6) does not apply. Pursuant to section 7805(f) of the Internal Revenue Code, the notice of proposed rulemaking preceding these regulations was submitted to the Chief Counsel for Advocacy of the Small Business Administration for comment on its impact on small business.

Drafting Information

The principal author of the regulations is Brendan O'Hara, Office of Associate Chief Counsel (Income Tax and Accounting). However, other personnel from the IRS and Treasury Department participated in the development of the regulations.

List of Subjects in 26 CFR Part 1

Income taxes, Reporting and recordkeeping requirements.

Adoption of Amendments to the Regulations

Accordingly, 26 CFR part 1 is amended as follows:

PART 1—INCOME TAXES

Paragraph 1. The authority citation for part 1 continues to read in part as follows:

Authority: 26 U.S.C. 7805 * * *

Par 2. In § 1.1031(k)–1, paragraph (k)(4) is revised to read as follows:

§ 1.1031(k)–1 Treatment of deferred exchanges.

* * * * *

(k) * * *

(4)(i) Except as provided in paragraph (k)(4)(ii) of this section, the person and a person described in paragraph (k)(2) of this section bear a relationship described in either section 267(b) or 707(b) (determined by substituting in each section ''10 percent'' for ''50 percent'' each place it appears).

(ii) In the case of a transfer of relinquished property made by a taxpayer on or after January 17, 2001, paragraph (k)(4)(i) of this section does not apply to a bank (as defined in section 581) or a bank affiliate if, but for this paragraph (k)(4)(ii), the bank or bank affiliate would be a disqualified person under paragraph (k)(4)(i) of this section solely because it is a member of the same controlled group (as determined under section 267(f)(1), substituting ''10 percent'' for ''50 percent' where it appears) as a person that has provided investment banking or brokerage services to the taxpayer within the 2-year period described in paragraph (k)(2) of this section. For purposes of this paragraph (k)(4)(ii), a bank affiliate is a corporation whose principal activity is rendering services to facilitate exchanges of property intended to qualify for nonrecognition of gain under section 1031 and all of whose stock is owned by either a bank or a bank holding company (within the meaning of section 2(a) of the Bank Holding Company Act of 1956 (12 U.S.C. 1841(a)).

* * * * *

Approved: January 25, 2002.

Robert E. Wenzel,

Deputy Commissioner of Internal Revenue.

Mark Weinberger,

Assistant Secretary of the Treasury.

[FR Doc. 02–2532 Filed 1–31–02; 8:45 am]

BILLING CODE 4830–01–P

DEPARTMENT OF TRANSPORTATION

Coast Guard

33 CFR Part 117

[CGD08–02–001]

RIN 2115–AE47

Drawbridge Operating Regulation; Mississippi River, Iowa and Illinois

AGENCY: Coast Guard, DOT.

ACTION: Temporary deviation.

SUMMARY: The Commander, Eighth Coast Guard District has authorized a temporary deviation from the regulation governing the Sabula Railroad Drawbridge, Mile 535.0, Upper Mississippi River at Sabula, Iowa. This deviation allows the drawbridge to remain closed to navigation for 50 days from 12:01 a.m., January 20, 2002, until 12:01 a.m., March 11, 2002. The drawbridge shall open on signal if at least twenty-four (24) hours advance notice is given.

DATES: This temporary deviation is effective from 12:01 a.m., January 20, 2002, until 12:01 a.m., March 11, 2002.

ADDRESSES: Unless otherwise indicated, documents referred to in this notice are available for inspection or copying at the office of the Eighth Coast Guard District, Bridge Administration Branch, Commander (obr), 1222 Spruce Street, St. Louis, MO 63103–2832. The Bridge Administration Branch maintains the public docket for this temporary deviation.

FOR FUTHER INFORMATION CONTACT: Roger K. Wiebusch, Bridge Administrator, at (314) 539–3900, extension 378.

SUPPLEMENTARY INFORMATION: The I & M Rail Link Railroad requested a temporary deviation on December 20, 2001 from the drawbridge operation regulations to allow the bridge owner time for preventative maintenance. The drawbridge operation regulations require that the drawbridge open on signal.

The Sabula Railroad Drawbridge provides a vertical clearance of 18.1 feet above normal pool in the closed-to-navigation position. Navigation on the waterway consists primarily of commercial tows and recreational watercraft. This deviation has been coordinated with waterway users. There were no objections.

This deviation allows the bridge to remain closed to navigation from 12:01 a.m., January 20, 2002 to 12:01 a.m., March 11, 2002 with openings provided upon receipt of twenty-four (24) hours advance notice.

Dated: January 15, 2002.

Roy J. Casto,

Rear Admiral, U.S. Coast Guard, Commander, Eighth Coast Guard District.

[FR Doc. 02–2545 Filed 1–31–02; 8:45 am]

BILLING CODE 4910–15–U

DEPARTMENT OF TRANSPORTATION

Coast Guard

33 CFR Part 165

[CGD07–01–136]

RIN 2115–AA97

Security Zones; St. Thomas, U.S. Virgin Islands

AGENCY: Coast Guard, DOT.

ACTION: Temporary final rule.

SUMMARY: The Coast Guard is establishing temporary security zones 50 yards around all cruise ships in the Port of Charlotte Amalie, St. Thomas, USVI. These security zones are needed to protect the public and the Port of Charlotte Amalie from potential subversive acts. No person or vessel will be permitted to enter or remain in these security zones unless specifically authorized by the Captain of the Port San Juan, or his designated representative.

DATES: This regulation becomes effective at 6 p.m. on December 19, 2001 and will terminate at 11:59 p.m. on June 15, 2002.

ADDRESSES: Comments and material received from the public, as well as documents indicated in this preamble as being available in the docket, are part of [CGD07–01–136] and are available for inspection or copying at Marine Safety Office San Juan, RODVAL Bldg, San Martin St. #90 Ste 400, Guaynabo, PR 00968, between 7 a.m. and 3:30 p.m. Monday through Friday, except Federal holidays.

FOR FURTHER INFORMATION CONTACT: LCDR Robert Lefevers, Marine Safety Office San Juan, Puerto Rico, at (787) 706–2440.

SUPPLEMENTARY INFORMATION:

Regulatory Information

We did not publish a notice of proposed rulemaking (NPRM) for this regulation. Under 5 U.S.C. 553(b)(B), the Coast Guard finds that good cause exists for not publishing a NPRM. Publishing a NPRM and delaying the rule's effective date would be contrary to the public interest since immediate action is needed to protect the public, ports and waterways of the United States. The

Coast Guard will issue a broadcast notice to mariners and a Marine Safety Information Bulletin via facsimile and electronic mail to advise mariners of the restriction.

For the same reasons, under 5 U.S.C. 553(d)(3), the Coast Guard finds that good cause exists for making this rule effective less than 30 days after publication in the **Federal Register**.

Background and Purpose

Based on the September 11, 2001, terrorist attacks on the World Trade Center buildings in New York and the Pentagon in Arlington, Virginia, there is an increased risk that subversive activity could be launched by vessels or persons in close proximity to the Port of Charlotte Amalie, U.S. Virgin Islands (USVI) against cruise ships in the Port.

Due to the number of passengers onboard cruise ships while moored in the Port of Charlotte Amalie, USVI, there is a risk that they are a target for subversive activity or a terrorist attack. The Captain of the Port San Juan is reducing this risk by prohibiting all vessels from coming within 50 yards of cruise ships while entering, departing, moored at any pier, or anchored in any anchorage in the Port of Charlotte Amalie, St. Thomas, USVI unless prior authorization is given by the Captain of the Port of San Juan. These temporary security zones are activated when cruise ships pass: St. Thomas Harbor green lighted buoy #3 in approximate position 18°19′19″ North, 64°55′40″ West when entering the port using St. Thomas Channel; red buoy #2 in approximate position 18°19′15″ North, 64°55′59″ West when entering the port using East Gregorie Channel; and red lighted buoy #4 in approximate position 18°18′16″ North, 64°57′30″ West when entering the port using West Gregorie Channel. These zones are deactivated when the vessel passes any of these buoys on its departure from port. United States Coast Guard and territorial law enforcement personnel will be enforcing these security zones.

Regulatory Evaluation

This rule is not a significant regulatory action under section 3(f) of Executive Order 12866, Regulatory Planning and Review, and does not require an assessment of potential costs and benefits under section 6(a)(3) of that order. The Office of Management and Budget has not reviewed it under that order. It is not significant under the regulatory policies and procedures of the Department of Transportation (DOT) (44 FR 11040; February 26, 1979) because the zones are narrow in scope and are only in effect for limited periods of time when a cruise ship is in Port.

Small Entities

Under the Regulatory Flexibility Act (5 U.S.C. 601–612), the Coast Guard considered whether this rule would have a significant economic effect upon a substantial number of small entities. ''Small entities'' include small businesses, not-for-profit organizations that are independently owned and operated and are not dominant in their fields, and governmental jurisdictions with populations of less than 50,000.

The Coast Guard certifies under 5 U.S.C. 605(b) that this rule will not have a significant economic impact on a substantial number of small entities because the zones are narrow in scope and are only in effect for limited periods of time when a cruise ship is in Port. Moreover, vessels may be allowed to enter the zones on a case-by-case basis with the permission of the Captain of the Port of San Juan.

Assistance for Small Entities

Under section 213(a) of the Small Business Regulatory Enforcement Fairness Act of 1996 (Public Law 104–121), we offer to assist small entities in understanding the rule so that they can better evaluate its effects on them and participate in the rulemaking process. If the rule will affect your small business, organization, or government jurisdiction and you have questions concerning its provisions or options for compliance, please contact the person listed under **FOR FURTHER INFORMATION CONTACT** for assistance in understanding this rule.

Small businesses may send comments on the actions of Federal employees who enforce, or otherwise determine compliance with, Federal regulations to the Small Business and Agriculture Regulatory Enforcement Ombudsman and the Regional Small each agency's responsiveness to small business. If you wish to comment on actions by employees of the Coast Guard, call 1–888–REG–FAIR (1–888–734–3247).

Collection of Information

This rule calls for no new collection of information requirements under the Paperwork Reduction Act (44 U.S.C. 3501–3520).

Federalism

A rule has implication for federalism under Executive Order 13132, Federalism, if it has a substantial direct effect on State or local governments and would either preempt State law or impose a substantial direct cost of compliance on them. We have analyzed this rule under that Order and have determined that it does not have implications for federalism.

Unfunded Mandates Reform Act

The Unfunded Mandates Reform Act of 1995 (2 U.S.C. 1531–1538) requires Federal agencies to assess the effects of their discretionary regulatory actions. In particular, the Act addresses actions that may result in the expenditure by a State, local, or tribal government, in the aggregate, or by the private sector of $100,000,000 or more in any one year. Though this rule will not result in such an expenditure, we do discuss the effects of this rule elsewhere in this preamble.

Taking of Private Property

This rule will not effect a taking of private property or otherwise have taking implications under Executive Order 12630, Governmental Actions and Interference with Constitutionally Protected Property Rights.

Civil Justice Reform

This rule meets applicable standards in sections 3(a) and 3(b)(2) of Executive Order 12988, Civil Justice Reform, to minimize litigation, eliminate ambiguity, and reduce burden.

Environmental

The Coast Guard has considered the environmental impact of this rule and concluded that under figure 2–1, paragraph 34(g), of Commandant Instruction M14475.1D that this rule is categorically excluded from further environmental documentation. A ''Categorical Exclusion Determination'' is available in the docket for inspection or copying where indicated under **ADDRESSES.**

Protection of Children

We have analyzed this rule under Executive Order 13045, Protection of Children from Environmental Health Risks and Safety Risks. This rule is not an economically significant rule and does not create an environmental risk to health or risk to safety that may disproportionately affect children.

Indian Tribal Governments

This rule does not have tribal implications under Executive Order 13175, Consultation and Coordination with Indian Tribal Governments, because it does not have a substantial direct effect on one or more Indian tribes, on the relationships between the Federal Government and Indian tribes, or on the distribution of power and responsibilities between the Federal Government and Indian tribes.

Energy Effects

We have analyzed this rule under Executive Order 13211, Actions Concerning Regulations That Significantly Affect Energy Supply, Distribution, or use. We have determined that it is not a ''significant energy action'' under Executive Order 12866 and is not likely to have a significant adverse effect on the supply, distribution, or use of energy. It has not been designated by the Administrator of the Office of Information and Regulatory Affairs as a significant energy action. Therefore, it does not require a Statement of Energy Effects under Executive Order 13211.

List of Subjects in 33 CFR Part 165

Harbors, Marine safety, Navigation (water), Reports and recordkeeping requirements, Security measures, Waterways.

For the reasons discussed in the preamble, the Coast Guard amends 33 CFR part 165, as follows:

PART 165—REGULATED NAVIGATION AREAS AND LIMITED ACCESS AREAS

1. The authority citation for part 165 continues to read as follows:

Authority: 33 U.S.C. 1231; 50 U.S.C. 191, 33 CFR 1.05–1(g), 6.04–1, 6.04–6, 160.5; 49 CFR 1.46.

2. A new temporary § 165.T07–136 is added to read as follows:

§ 165.T07–136 Security Zones; Charlotte Amalie Harbor, St. Thomas, USVI.

(a) *Regulated area.* Temporary moving security zones are established 50 yards around all cruise ships while they enter, depart, are moored at any pier or anchored in any anchorage in Charlotte Amalie Harbor. These temporary security zones are activated when cruise ships pass: St. Thomas Harbor green lighted buoy #3 in approximate position 18°19′19″ North, 64°55′40″ West when entering the port using St. Thomas Channel; red buoy #2 in approximate position 18°19′15″ North, 64°55′59″ West when entering the port using East Gregorie Channel; and red lighted buoy #4 in approximate position 18°18′16″ North, 64°57′30″ West when entering the port using West Gregorie Channel. These zones are deactivated when the cruise ship passes any of these buoys on its departure from port.

(b) *Regulations.* In accordance with the general regulations in § 165.33 of this part, no person or vessel shall enter or remain in this security zone unless specifically authorized by the Captain of the Port San Juan, a Coast Guard commissioned, warrant, or petty officer designated by him or a designated West Indies Company Security or Virgin Islands Port Authority Security Manager. The Captain of the Port will notify the public when a zone is activated and any changes in the status of the zones by Marine Safety Radio Broadcast on VHF Marine Band Radio, Channel 16 (157.1 Mhz) and by a Marine Safety Information Bulletin (MSIB) sent by facsimile and electronic mail.

(c) *Dates.* This section becomes effective at 6 p.m. on December 19, 2001 and will terminate at 11:59 p.m. on June 15, 2002.

Dated: December 17, 2001.

J.A. Servidio,

Commander, U.S. Coast Guard, Captain of the Port.

[FR Doc. 02–2546 Filed 1–31–02; 8:45 am]

BILLING CODE 4910–15–P

DEPARTMENT OF TRANSPORTATION

Coast Guard

33 CFR Part 165

[CGD07–02–002]

RIN 2115–AA97

Security Zones; St. Croix, U.S. Virgin Islands

AGENCY: Coast Guard, DOT.

ACTION: Temporary final rule.

SUMMARY: The Coast Guard is extending the temporary fixed security zone around all commercial tank and freight vessels moored at every dock at the HOVENSA refinery at St. Croix, U.S. Virgin Islands. All persons aboard commercial tank and freight vessels moored at the HOVENSA docks must remain on board for the duration of the port call unless escorted by designated HOVENSA personnel or specifically permitted to disembark by the U.S. Coast Guard Captain of the Port San Juan. This security zone is needed for national security reasons to protect the public and port of HOVENSA from potential subversive acts.

DATES: This regulation becomes effective at 5 a.m. on January 9, 2002 and will terminate at 11:59 p.m. on June 15, 2002.

ADDRESSES: Comments and material received from the public, as well as documents indicated in this preamble as being available in the docket, are part of [CGD07–02–002] and are available for inspection or copying at Marine Safety Office San Juan, RODVAL Bldg, San Martin St. #90 Ste 400, Guaynabo, PR 00968, between 7 a.m. and 3:30 p.m. Monday through Friday, except Federal holidays.

FOR FURTHER INFORMATION CONTACT: LCDR Robert Lefevers, Marine Safety Office San Juan, Puerto Rico at (787) 706–2440.

SUPPLEMENTARY INFORMATION:

Regulatory Information

We did not publish a notice of proposed rulemaking (NPRM) for this regulation. Under 5 U.S.C. 553(b)(B), the Coast Guard finds that good cause exists for not publishing a NPRM. Publishing a NPRM and delaying the rule's effective date would be contrary to the public interest since immediate action is needed to protect the public, ports and waterways of the United States. The Coast Guard will issue a broadcast notice to mariners to advise mariners of the restriction.

For the same reasons, under 5 U.S.C. 553(d)(3), the Coast Guard finds that good cause exists for making this rule effective less than 30 days after publication in the **Federal Register**.

Background and Purpose

Due to the highly volatile nature of the substances stored at the HOVENSA facility, there is a risk that subversive activity could be launched by persons aboard commercial tank and freight vessels calling at the HOVENSA facility in St Croix, USVI. The Captain of the Port San Juan is reducing this risk by prohibiting all persons aboard these vessels from disembarking while moored at the HOVENSA facility unless escorted by designated HOVENSA personnel or specifically permitted by the Captain of the Port San Juan. HOVENSA security personnel, in conjunction with local police department personnel, will be present to enforce this security zone. A security zone regulation for the same location was published in the **Federal Register** on September 28, 2001 (66 FR 49534). However, that regulation expired at 11:59 p.m. on October 15, 2001. We extended this security zone in CGD07–01–125 until December 31, 2001. The Captain of the Port San Juan has identified the need to keep a security zone in place for national security reasons and to protect the public and the port of HOVENSA from potential subversive acts.

Regulatory Evaluation

This rule is not a significant regulatory action under section 3(f) of Executive Order 12866, Regulatory Planning and Review, and does not require an assessment of potential costs and benefits under section 6(a)(3) of that order. The Office of Management and

Budget has not reviewed it under that order. It is not significant under the regulatory policies and procedures of the Department of Transportation (DOT) (44 FR 11040; February 26, 1979) because this rule is in effect for a limited time and crewmember may be allowed to disembark when escorted by designated HOVENSA security or authorized by the Captain of the Port of San Juan.

Small Entities

Under the Regulatory Flexibility Act (5 U.S.C. 601–612), the Coast Guard considered whether this rule would have a significant economic effect upon a substantial number of small entities. ''Small entities'' include small businesses, not-for-profit organizations that are independently owned and operated and are not dominant in their fields, and governmental jurisdictions with populations of less than 50,000.

The Coast Guard certifies under 5 U.S.C. 605(b) that this rule will not have a significant economic impact on a substantial number of small entities because persons may be allowed to disembark the vessels on a case by case basis with the authorization of the Captain of the Port and this temporary rule is only in effect for a limited time.

Assistance for Small Entities

Under section 213(a) of the Small Business Regulatory Enforcement Fairness Act of 1996 (Pub. L. 104–121), we offer to assist small entities in understanding the rule so that they can better evaluate its effects on them and participate in the rulemaking process. If the rule will affect your small business, organization, or government jurisdiction and you have questions concerning its provisions or options for compliance, please contact the person listed under **FOR FURTHER INFORMATION CONTACT** for assistance in understanding this rule.

Small businesses may send comments on the actions of Federal employees who enforce, or otherwise determine compliance with, Federal regulations to the Small Business and Agriculture Regulatory Enforcement Ombudsman and the Regional Small each agency's responsiveness to small business. If you wish to comment on actions by employees of the Coast Guard, call 1–888–REG–FAIR (1–888–734–3247).

Collection of Information

This rule calls for no new collection of information requirements under the Paperwork Reduction Act (44 U.S.C. 3501–3520).

Federalism

A rule has implication for federalism under Executive Order 13132, Federalism, if it has a substantial direct effect on State or local governments and would either preempt State law or impose a substantial direct cost of compliance on them. We have analyzed this rule under that Order and have determined that it does not have implications for federalism.

Unfunded Mandates Reform Act

The Unfunded Mandates Reform Act of 1995 (2 U.S.C. 1531–1538) requires Federal agencies to assess the effects of their discretionary regulatory actions. In particular, the Act addresses actions that may result in the expenditure by a State, local, or tribal government, in the aggregate, or by the private sector of $100,000,000 or more in any one year. Though this rule will not result in such an expenditure, we do discuss the effects of this rule elsewhere in this preamble.

Taking of Private Property

This rule will not effect a taking of private property or otherwise have taking implications under Executive Order 12630, Governmental Actions and Interference with Constitutionally Protected Property Rights.

Civil Justice Reform

This rule meets applicable standards in sections 3(a) and 3(b)y(2) of Executive Order 12988, Civil Justice Reform, to minimize litigation, eliminate ambiguity, and reduce burden.

Environmental

The Coast Guard has considered the environmental impact of this rule and will prepare a categorical exclusion as per Figure 2–1, paragraph 34(g) of the Coast Guard NEPA Implementing Procedures, Commandant Instruction M16475.1D.

Protection of Children

We have analyzed this rule under Executive Order 13045, Protection of Children from Environmental Health Risks and Safety Risks. This rule is not an economically significant rule and does not create an environmental risk to health or risk to safety that may disproportionately affect children.

Indian Tribal Governments

This rule does not have tribal implications under Executive Order 13175, Consultation and Coordination with Indian Tribal Governments, because it does not have a substantial direct effect on one or more Indian tribes, on the relationships between the Federal Government and Indian tribes, or on the distribution of power and responsibilities between the Federal Government and Indian tribes.

Energy Effects

We have analyzed this rule under Executive Order 13211, Actions Concerning Regulations That Significantly Affect Energy Supply, Distribution, or use. We have determined that it is not a ''significant energy action'' under Executive Order 12866 and is not likely to have a significant adverse effect on the supply, distribution, or use of energy. It has not been designated by the Administrator of the Office of Information and Regulatory Affairs as a significant energy action. Therefore, it does not require a Statement of Energy Effects under Executive Order 13211.

List of Subjects in 33 CFR Part 165

Harbors, Marine safety, Navigation (water), Reporting and recordkeeping requirements, Security measures, Waterways.

For the reasons discussed in the preamble, the Coast Guard amends 33 CFR part 165, as follows:

PART 165—REGULATED NAVIGATION AREAS AND LIMITED ACCESS AREAS

1. The authority citation for part 165 continues to read as follows:

Authority: 33 U.S.C. 1231; 50 U.S.C. 191, 33 CFR 1.05–1(g), 6.04–1, 6.04–6, 160.5; 49 CFR 1.46.

2. A new temporary § 165.T–07–002 is added to read as follows:

§ 165.T07–002 Security Zone; HOVENSA Refinery, St. Croix, U.S. Virgin Islands.

(a) *Regulated area.* A temporary fixed security zone is established around all commercial tank and freight vessels moored at every dock at the HOVENSA refinery at St Croix, U. S. Virgin Islands.

(b) *Regulations.* In accordance with the general regulations of § 165.33 of this part, all persons aboard commercial tank and freight vessels moored at the docks in the regulated area must remain on board for the duration of the port call unless escorted by designated HOVENSA personnel or specifically authorized by the Captain of the Port San Juan, or a Coast Guard commissioned, warrant, or petty officer designated by him. The Captain of the Port will notify the public of any changes in the status of this zone by Marine Safety Radio Broadcast on VHF Marine Band Radio, Channel 16 (157.1 Mhz).

(c) *Dates.* This section becomes effective at 5 a.m. on January 9, 2002,

and will terminate at 11:59 p.m. on June 15, 2002.

Dated: January 8, 2002.

J.A. Servidio,

Commander, U.S. Coast Guard, Captain of the Port.

[FR Doc. 02–2543 Filed 1–31–02; 8:45 am]

BILLING CODE 4910–15–P

ENVIRONMENTAL PROTECTION AGENCY

40 CFR Part 180

[OPP–301206; FRL–6818–3]

RIN 2070–AB78

Bifenazate; Pesticide Tolerance

AGENCY: Environmental Protection Agency (EPA).

ACTION: Final rule.

SUMMARY: This regulation establishes tolerances for (i) combined residues of bifenazate (hydrazinecarboxylic acid, 2-(4-methoxy-[1,1'-biphenyl]-3-yl), 1-methylethyl ester) and D3598 (expressed as bifenazate; diazinecarboxylic acid, 2-(4-methoxy-[1,1'-biphenyl]-3-yl), 1-methylethylester) in or on raw agricultural commodities (apple, wet pomace; cotton, undelinted seed; cotton gin byproducts (gin trash); fruit, pome group; grape; grape, raisin; hop, dried cones; nectarine; peach; plum; strawberry and in fat of cattle, goat, hog, horse and sheep and (ii) combined residues of bifenazate, D3598 (expressed as bifenazate), A1530 (1,1'-biphenyl, 4-ol) and A1530-sulfate (expressed as A1530; 1,1'-biphenyl, 4-oxysulfonic acid) in meat and meat byproducts of cattle, goat, horse, hog and sheep and milk. Uniroyal Chemical Company requested this tolerance under the Federal Food, Drug, and Cosmetic Act, as amended by the Food Quality Protection Act (FQPA) of 1996.

DATES: This regulation is effective February 1, 2002. Objections and requests for hearings, identified by docket control number OPP–301206, must be received by EPA on or before April 2, 2002.

ADDRESSES: Written objections and hearing requests may be submitted by mail, in person, or by courier. Please follow the detailed instructions for each method as provided in Unit VI. of the **SUPPLEMENTARY INFORMATION**. To ensure proper receipt by EPA, your objections and hearing requests must identify docket control number OPP–301206 in the subject line on the first page of your response.

FOR FURTHER INFORMATION CONTACT: By mail: Suku Oonnithan, Registration Division (7505C), Office of Pesticide Programs, Environmental Protection Agency, 1200 Pennsylvania Ave., NW., Washington, DC 20460; telephone number: (703) 605–0368; and e-mail address: oonnithan.suku@epa.gov.

SUPPLEMENTARY INFORMATION:

I. General Information

A. Does this Action Apply to Me?

You may be affected by this action if you are an agricultural producer, food manufacturer, or pesticide manufacturer. Potentially affected categories and entities may include, but are not limited to:

Categories	NAICS	Examples of Potentially Affected Entities
Industry	111	Crop production
	112	Animal production
	311	Food manufacturing
	32532	Pesticide manufacturing

This listing is not intended to be exhaustive, but rather provides a guide for readers regarding entities likely to be affected by this action. Other types of entities not listed in the table could also be affected. The North American Industrial Classification System (NAICS) codes have been provided to assist you and others in determining whether or not this action might apply to certain entities. If you have questions regarding the applicability of this action to a particular entity, consult the person listed under **FOR FURTHER INFORMATION CONTACT**.

B. How Can I Get Additional Information, Including Copies of this Document and Other Related Documents?

1. *Electronically*. You may obtain electronic copies of this document, and certain other related documents that might be available electronically, from the EPA Internet Home Page at http://www.epa.gov/. To access this document, on the Home Page select ''Laws and Regulations'', ''Regulations and Proposed Rules,'' and then look up the entry for this document under the ''**Federal Register**—Environmental Documents.'' You can also go directly to the **Federal Register** listings at http://www.epa.gov/fedrgstr/. To access the Office of Prevention, Pesticides, and Toxic Substances (OPPTS) Harmonized Guidelines referenced in this document, go directly to the guidelines at http://www.epa.gov/opptsfrs/home/guidelin.htm. A frequently updated electronic version of 40 CFR part 180 is available at http://www.access.gpo.gov/nara/cfr/cfrhtml_180/Title_40/40cfr180_00.html, a beta site currently under development.

2. *In person*. The Agency has established an official record for this action under docket control number OPP–301206. The official record consists of the documents specifically referenced in this action, and other information related to this action, including any information claimed as Confidential Business Information (CBI). This official record includes the documents that are physically located in the docket, as well as the documents that are referenced in those documents. The public version of the official record does not include any information claimed as CBI. The public version of the official record, which includes printed, paper versions of any electronic comments submitted during an applicable comment period is available for inspection in the Public Information and Records Integrity Branch (PIRIB), Rm. 119, Crystal Mall #2, 1921 Jefferson Davis Hwy., Arlington, VA, from 8:30 a.m. to 4 p.m., Monday through Friday, excluding legal holidays. The PIRIB telephone number is (703) 305–5805.

II. Background and Statutory Findings

In the **Federal Register** of April 18, 2001; (66 FR 19935) (FRL–6777–4), EPA issued a notice pursuant to section 408 of the Federal Food, Drug, and Cosmetic Act (FFDCA), 21 U.S.C. 346a as amended by the FQPA of 1996 (Public Law 104–170) announcing the filing of a pesticide petition (PP 0F6108) for tolerance by Uniroyal Chemical Company, Benson Road, Middlebury, CT 06749. This notice included a summary of the petition prepared by Uniroyal Chemical Company, the registrant. There were no comments received in response to the notice of filing.

The petition requested that 40 CFR part 180 be amended by establishing a tolerance for residues of the insecticide bifenazate in or on the raw agricultural commodities apple, wet pomace at 1.2 parts per million (ppm); cotton seed at 0.5 ppm; cotton, gin byproducts (gin trash) at 20 ppm; fruit, pome, group at 0.75 ppm; fruit, stone, group (except cherries) at 1.5 ppm; grape at 0.75 ppm; hop at 15 ppm and strawberry at 1.5 ppm. As cotton processed commodities fed to animals may be transferred to milk and edible tissue of ruminants, tolerances were also proposed for meat at 0.02 ppm and milk at 0.01 ppm.

Section 408(b)(2)(A)(i) of the FFDCA allows EPA to establish a tolerance (the legal limit for a pesticide chemical residue in or on a food) only if EPA

determines that the tolerance is ''safe.'' Section 408(b)(2)(A)(ii) defines ''safe'' to mean that'' there is a reasonable certainty that no harm will result from aggregate exposure to the pesticide chemical residue, including all anticipated dietary exposures and all other exposures for which there is reliable information.'' This includes exposure through drinking water and in residential settings, but does not include occupational exposure. Section 408(b)(2)(C) requires EPA to give special consideration to exposure of infants and children to the pesticide chemical residue in establishing a tolerance and to ''ensure that there is a reasonable certainty that no harm will result to infants and children from aggregate exposure to the pesticide chemical residue.''

EPA performs a number of analyses to determine the risks from aggregate exposure to pesticide residues. For further discussion of the regulatory requirements of section 408 and a complete description of the risk assessment process, see the final rule on Bifenthrin Pesticide Tolerances (62 FR 62961, November 26, 1997) (FRL–5754–7).

III. Aggregate Risk Assessment and Determination of Safety

Consistent with section 408(b)(2)(D), EPA has reviewed the available scientific data and other relevant information in support of this action. EPA has sufficient data to assess the hazards of and to make a determination on aggregate exposure, consistent with section 408(b)(2), for tolerances for combined residues of bifenazate and D3598 (expressed as bifenazate) in or on apple, wet pomace at 1.2 ppm; cattle, fat at 0.1 ppm; cotton, gin byproducts at 35 ppm; cotton, undelinted seed at 0.75 ppm; fruit, pome, group at 0.75 ppm; goat, fat at 0.1 ppm; grape at 0.75 ppm; grape, raisin at 1.2 ppm; hog, fat at 0.1 ppm; hop, dried cones at 15 ppm; horse, fat at 0.1 ppm; nectarine at 1.7 ppm; peach at 1.7 ppm; plum at 0.3 ppm; sheep, fat at 0.1 ppm; strawberry at 1.5 ppm and combined residues of bifenazate and D3598 (expressed as bifenazate), A1530 and A1530-sulfate (expressed as A1530) in: cattle, meat at 0.01 ppm; cattle, meat byproducts at 0.01 ppm; goat, meat at 0.01 ppm; goat, meat byproducts at 0.01 ppm; hog, meat at 0.01 ppm; hog, meat byproducts at 0.01 ppm; horse, meat at 0.01 ppm; horse, meat byproducts at 0.01 ppm; milk at 0.01 ppm; sheep, meat at 0.01 ppm; sheep, meat byproducts at 0.01 ppm. EPA's assessment of exposures and risks associated with establishing the tolerance follows.

A. Toxicological Profile

EPA has evaluated the available toxicity data and considered its validity, completeness, and reliability as well as the relationship of the results of the studies to human risk. EPA has also considered available information concerning the variability of the sensitivities of major identifiable subgroups of consumers, including infants and children. The nature of the toxic effects caused by bifenazate are discussed in the following Table 1 as well as the no observed adverse effect level (NOAEL) and the lowest observed adverse effect level (LOAEL) from the toxicity studies reviewed.

TABLE 1—SUBCHRONIC, CHRONIC, AND OTHER TOXICITY

OPPTS Guideline No.	Study Type (All Studies Acceptable)	Results
870.3100	90–Day oral toxicity rodents-rat	NOAEL = 13.8 mg/kg/day in males, 3.2 mg/kg/day in females. LOAEL = 27.7 mg/kg/day in males, 16.3 mg/kg/day in females based on decreased body weight gain in both sexes, decreased liver weight in males, increased spleen weight in females, and histopathology in liver in both sexes, and histopathological changes in the spleen and adrenal cortex in males.
870.3150	90–Day oral toxicity nonrodents-dog	NOAEL = 0.9 mg/kg/day in males, 1.3 mg/kg/day in females. LOAEL = 10.4 mg/kg/day in males, 10.7 mg/kg/day in females based on changes in hematological parameters in both sexes, increased bilirubin in the urine in males, increased absolute and relative liver weight in females and liver histopathologic effects in both sexes.
870.3200	21–Day dermal toxicity-rat	NOAEL = 80 mg/kg/day in males and females LOAEL = 400 mg/kg/day in males and females based on decreased body weight in females, decreased food consumption in both sexes, increased urinary ketones, increased urinary protein, increased urinary specific gravity, and decreased urinary volume in both sexes, and increased incidence of extramedullary hematopoiesis in the spleen in both sexes.
870.3700	Prenatal developmental in rodents-rat	Maternal NOAEL = 10 mg/kg/day. LOAEL = 100 mg/kg/day based on increased clinical signs, and decreased body weight, body weight gain, and food consumption. Developmental NOAEL = 500 mg/kg/day LOAEL = not established
870.3700	Prenatal developmental in nonrodents-rabbit	Maternal NOAEL = 200 mg/kg/day LOAEL = not established; Doses for the main study were selected based on a range-finding study in which groups of 5 rabbits each received 0, 125, 250, 500, 750, or 1,000 mg/kg/day during gestation days 6–19 by gavage.

TABLE 1—SUBCHRONIC, CHRONIC, AND OTHER TOXICITY—Continued

OPPTS Guideline No.	Study Type (All Studies Acceptable)	Results
		Maternal toxicity was seen as increased deaths and decreased body weight at 750 mg/kg/day and above. A treatment-related increase in the number of does aborting was seen at 250 mg/kg/day and above. Developmental NOAEL = 200 mg/kg/day. LOAEL = not established; Due to only one or two litters available in each of the treated groups in the range finding study, a clear assessment of developmental toxicity was not possible. Based on these results, doses of 10, 50, and 200 mg/kg/day were selected for the main study.
870.3800	Reproduction and fertility effects-rat	Parental/Systemic NOAEL = 1.6 mg/kg/day in males, 1.8 mg/kg/day in females. LOAEL = 6.5 mg/kg/day in males and 7.4 mg/kg/day in females based on decreased body weight, body weight gain, and food consumption in both sexes. Reproductive NOAEL = 16.4 mg/kg/day in males, 18.3 mg/kg/day in females. LOAEL = not established. Offspring NOAEL = 16.4 mg/kg/day in males, 18.3 mg/kg/day in females. LOAEL = not established.
870.4100	Chronic toxicity dogs	NOAEL = 1.01 mg/kg/day in males, 1.05 mg/kg/day in females LOAEL = 8.95 mg/kg/day in males, 10.42 mg/kg/day in females based on changes in hematological and clinical chemistry parameters in both sexes and histopathological effects in bone marrow, liver, and kidney in both sexes.
870.4300	Chronic/Carcinogenicity rats	NOAEL = 3.9 mg/kg/day in males, 4.8 mg/kg/day in females. LOAEL = 9.7 mg/kg/day in males and 9.7 mg/kg/day in females based on decreased body weight, body weight gain, and food consumption in both sexes. No evidence of carcinogenicity
870.4300	Carcinogenicity mice	NOAEL = 1.5 mg/kg/day in males, 19.7 mg/kg/day in females. LOAEL = 15.4 mg/kg/day in males, 35.7 mg/kg/day in females based on decreased body weight and body weight gain in females and hematological effects and decreased kidney weight in males. No evidence of carcinogenicity
870.5265	Gene Mutation	Non-mutagenic when tested up to 5000 ug/plate, in presence and absence of activation, in *S. typhimurium* strains TA98, TA100, TA1535 and TA1537 and *E. coli* strain WP2uvra.
870.5300	Gene Mutation	Non-mutagenic at the TK locus in L5178Y mouse lymphoma cells tested up to cytotoxic concentrations or limit of solubility, in presence and absence of S-9 activation.
870.5375	Chromosome aberration	Did not induce structural chromosome aberration in CHO-K1 cell cultures in the presence and absence of activation up to cytotoxic concentrations.
870.5385	Chromosomal aberration	Non-mutagenic in ICR mouse bone marrow micronucleus chromosomal aberrations assay up to cytotoxic concentrations.

TABLE 1—SUBCHRONIC, CHRONIC, AND OTHER TOXICITY—Continued

OPPTS Guideline No.	Study Type (All Studies Acceptable)	Results
870.7485	Metabolism and pharmacokinetics -rat	Total recovery of the administered dose was > 93% for all treatment groups. Fecal excretion was the major route of elimination (66–83% of the dose), with eight primary metabolites detected. These metabolites, as well as those identified in the urine and bile, were the result of metabolic reactions including hydrazine oxidation to the diazene (D3598), demethylation, ring hydroxylation, and molecular scission with the loss of hydrazinecarboxylic acid portion to methoxybiphenyl (D1989) with subsequent conjugation. The Metabolism Assessment Review Committee (MARC) determined that D1989 is not likely to be more toxic than the parent compound.

B. Toxicological Endpoints

The dose at which no adverse effects are observed (the NOAEL) from the toxicology study identified as appropriate for use in risk assessment is used to estimate the toxicological level of concern (LOC). However, the lowest dose at which adverse effects of concern are identified (the LOAEL) is sometimes used for risk assessment if no NOAEL was achieved in the toxicology study selected. An uncertainty factor (UF) is applied to reflect uncertainties inherent in the extrapolation from laboratory animal data to humans and in the variations in sensitivity among members of the human population as well as other unknowns. An UF of 100 is routinely used, 10X to account for interspecies differences and 10X for intra species variations.

For dietary risk assessment (other than cancer) the Agency uses the UF to calculate an acute or chronic reference dose (acute RfD or chronic RfD) where the RfD is equal to the NOAEL divided by the appropriate UF (RfD = NOAEL/UF). Where an additional safety factor is retained due to concerns unique to the FQPA, this additional factor is applied to the RfD by dividing the RfD by such additional factor. The acute or chronic Population Adjusted Dose (aPAD or cPAD) is a modification of the RfD to accommodate this type of FQPA Safety Factor.

For non-dietary risk assessments (other than cancer) the UF is used to determine the LOC. For example, when 100 is the appropriate UF (10X to account for interspecies differences and 10X for intraspecies variations) the LOC is 100. To estimate risk, a ratio of the NOAEL to exposures (margin of exposure (MOE) = NOAEL/exposure) is calculated and compared to the LOC.

The linear default risk methodology (Q*) is the primary method currently used by the Agency to quantify carcinogenic risk. The Q* approach assumes that any amount of exposure will lead to some degree of cancer risk. A Q* is calculated and used to estimate risk which represents a probability of occurrence of additional cancer cases (e.g., risk is expressed as 1×10^{-6} or one in a million). Under certain specific circumstances, MOE calculations will be used for the carcinogenic risk assessment. In this non-linear approach, a ''point of departure'' is identified below which carcinogenic effects are not expected. The point of departure is typically a NOAEL based on an endpoint related to cancer effects though it may be a different value derived from the dose response curve. To estimate risk, a ratio of the point of departure to exposure (MOE_{cancer} = point of departure/exposures) is calculated. A summary of the toxicological endpoints for bifenazate used for human risk assessment is shown in the following Table 2:

TABLE 2—SUMMARY OF TOXICOLOGICAL DOSE AND ENDPOINTS FOR BIFENAZATE FOR USE IN HUMAN RISK ASSESSMENT[1]

Exposure Scenario	Dose Used in Risk Assessment, UF	FQPA SF* and Level of Concern for Risk Assessment	Study and Toxicological Effects
Acute Dietary for general population and females 13–50 years old	None	An acute dietary endpoint was not selected based on the absence of an appropriate endpoint attributed to a single dose	None
Chronic Dietary all populations	NOAEL= 1.0 mg/kg/day; UF = 100; Chronic RfD = 0.01 mg/kg/day	FQPA SF = 1X; cPAD = cRfD/FQPA; SF = 0.01 mg/kg/day	LOAEL = 8.9/10.4 mg/kg/day [M/F] based on changes in hematological and clinical chemistry parameters, and histopathology in bone marrow, liver, and kidney in the One Year Dog Feeding Study
Incidental Oral, Short Term (1–30 days)	Oral NOAEL = 10 mg/kg/day	LOC = 100	LOAEL = 100 mg/kg/day based on clinical signs, decreased body weight and food consumption during the dosing period in the Rat Developmental Study

TABLE 2—SUMMARY OF TOXICOLOGICAL DOSE AND ENDPOINTS FOR BIFENAZATE FOR USE IN HUMAN RISK ASSESSMENT[1]—Continued

Exposure Scenario	Dose Used in Risk Assessment, UF	FQPA SF* and Level of Concern for Risk Assessment	Study and Toxicological Effects
Incidental Oral, Intermediate Term (30 days – 6 months)	Oral NOAEL = 0.9 mg/kg/day	LOC = 100	LOAEL = 10.4/10.7 mg/kg/day [M/F] based on changes in hematologic parameters in the 90–Day Subchronic Dog Study
Short-, Intermediate- and Long-Term Dermal (1–30 days, 30 days–6 months, and 6 months to lifetime) (Occupational/Residential)	Dermal NOAEL = 80 mg/kg/day	LOC for MOE = 100	LOAEL = 400 mg/kg/day based on decreased body weight and food consumption, hematologic effects, increased spleen weight and extramedullary hemapoiesis in the spleen in the 21–Day Dermal Toxicity Study in Rats
Short-Term Inhalation (1–30 days) (Occupational/Residential)	Oral NOAEL= 10 mg/kg/day (inhalation absorption rate = 100%)	LOC for MOE = 100	LOAEL = 100 mg/kg/day based on decreased body weight and food consumption in the Rat Developmental Study
Intermediate-Term Inhalation (30 days–6 months) (Occupational/Residential)	Oral study NOAEL= 0.9 mg/kg/day (inhalation absorption rate = 100%)	LOC for MOE = 100	LOAEL = 10.4/10.7 mg/kg/day based on changes in hematologic parameters in the 90–Day Dog Feeding Study
Long-Term Inhalation (6 months-lifetime) (Occupational/Residential)	Oral study NOAEL= 1.0 mg/kg/day (inhalation absorption rate = 100%)	LOC for MOE = 100	LOAEL = 8.9/10.4 mg/kg/day [M/F] based on changes in hematological and clinical chemistry parameters, and histopathology in bone marrow, liver, and kidney in the One Year Dog Feeding Study
Cancer (oral, dermal, inhalation)	Cancer classification not likely	Risk Assessment not conducted	No evidence of carcinogenicity

[1] FQPA SF = Food Quality Protection Act safety factor, LOAEL = lowest observed adverse effect level, LOC = level of concern, MOE = margin of exposure, NOAEL = no observed adverse effect level, PAD = population adjusted dose (a = acute, c = chronic), RfD = reference dose, UF = uncertainty factor.

*The reference to the FQPA Safety Factor refers to any additional safety factor retained due to concerns unique to the FQPA.

C. Exposure Assessment

1. *Dietary exposure from food and feed uses.* Tolerances have been established 40 CFR 180.572 for the combined residues of bifenazate and D3598 (expressed as bifenazate) in or on raw agricultural commodities and animal fat and combined residues of bifenazate, D3598 (expressed as bifenazate), A1530 and A1530-sulfate (expressed as A1530) in animal tissues (excluding fat) and milk. Risk assessments were conducted by EPA to assess dietary exposures from bifenazate in food as follows:

i. *Acute exposure.* The Agency did not identify an acute endpoint for the general population, infants, children, and females 13 to 50 years old. Therefore, an acute dietary exposure analysis is not necessary.

ii. *Chronic exposure.* A chronic dietary exposure analysis was conducted using the Dietary Exposure Evaluation Model (DEEM® ver 7.73) which incorporates consumption data from the USDA 1989–92 Continuing Surveys of Food Intake by Individuals (CSFII). The dietary exposure analysis assumed tolerance level residues and 100% crop treated for all registered and proposed crops. Processing factors for apple juice and grape juice were reduced to 0.23 and 0.17, respectively. The DEEM® default processing factor ratio between juice and concentrate was maintained and default processing factors were assumed for all other commodities.

There is a Federal Insecticide, Fungicide and Rodenticide Act (FIFRA) sec 18 registration for application of bifenazate to greenhouse grown tomatoes. The potential for fresh market tomatoes to enter the processed market channel from this use is minimal for the following reasons: (a) this sec 18 approval will treat only about 300 acres of greenhouse grown tomatoes in Colorado, Texas and Virginia, (b) the tomato variety grown is an indeterminant type unsuitable for processing due to less solids and higher water content, (c) fresh market tomatoes do not tolerate the bulk handling required for processing, (d) higher price for fresh tomatoes would dictate the growers not to divert greenhouse grown tomatoes to the processing market. Therefore, the dietary contribution of bifenazate residues from treated tomatoes was determined to be negligible and a zero residue in/on tomatoes was assumed for this action.

The chronic dietary food exposure estimates to bifenazate were less than The Agency 's level of concern (< 100% cPAD) for the general U.S. population and all population subgroups. The most highly exposed population was infants (< 1 year) at 52% of the cPAD.

iii. *Cancer.* The Agency classified bifenazate as ''not likely'' to be a human carcinogen according to EPA *Proposed Guidelines for Carcinogen Risk Assessment* (April 10, 1996). Therefore, a cancer dietary exposure analysis is not necessary.

2. *Dietary exposure from drinking water.* The available environmental fate data indicate that bifenazate may not persist in the environment nor have the ability to leach into ground water resources. Bifenazate dissipates quickly through metabolic processes under aerobic soil conditions (with a half-life of 30 minutes), by aqueous photolysis (half-life of 0.67 day), and by hydrolysis, especially in alkaline water (half-life of 0.08 day). In neutral and acidic water systems, bifenazate may persist for approximately one day or longer (half-lives of 0.8 day at pH 7, and 5.4 days in pH 5). Although photodegradation of bifenazate in soil may be possible, it could not be confirmed in the laboratory

due to rapid biodegradation of bifenazate under aerobic soil conditions. In the laboratory soil column studies, bifenazate showed low to no mobility in the soils tested.

Two major degradates of bifenazate were identified in the aqueous photolysis and aerobic soil metabolism studies D3598 (diazinecarboxylic acid, 2-(4-methoxy-1,1'-biphenyl]-3-yl), 1-methylethylester) and D1989 (4-methoxybiphenyl). Similar to parent bifenazate, D3598 seemed to metabolize quickly under aerobic soil conditions (half-life of 8.3 hours). D1989 on the other hand, is believed to be more persistent and have some potential to leach into the ground water resources. D1989 has an aerobic soil metabolism half-life of 60 days and was observed to have slight mobility in laboratory leaching studies. D1989 was the only degradate of bifenazate detected in terrestrial field dissipation studies, but only the 0 – 6 inches soil depth.

Since parent bifenazate and its degradate D3598 are not persistent in the environment and since there are no acute dietary endpoint data for these compounds, the Agency has decided not to consider bifenazate and D3598 as residues of concern in drinking water. Instead, D1989 was assumed to have the possible potential to contaminate the drinking water resources.

The Agency lacks sufficient monitoring exposure data to complete a comprehensive dietary exposure analysis and risk assessment for bifenazate in drinking water. Because the Agency does not have comprehensive monitoring data, drinking water concentration estimates are made by reliance on simulation or modeling taking into account data on the physical characteristics of bifenazate.

The Agency uses the FQPA Index Reservoir Screening Tool (FIRST) or the Pesticide Root Zone/Exposure Analysis Modeling System (PRZM/EXAMS), to produce estimates of pesticide concentrations in an index reservoir. The Screening Concentration in Ground Water (SCI-GROW) model is used to predict pesticide concentrations in shallow groundwater. For a screening-level assessment for surface water EPA will use FIRST (a tier 1 model) before using PRZM/EXAMS (a tier 2 model). The FIRST model is a subset of the PRZM/EXAMS model that uses a specific high-end runoff scenario for pesticides. While both FIRST and PRZM/EXAMS incorporate an index reservoir environment, the PRZM/EXAMS model includes a percent crop area factor as an adjustment to account for the maximum percent crop coverage within a watershed or drainage basin.

None of these models include consideration of the impact processing (mixing, dilution, or treatment) of raw water for distribution as drinking water would likely have on the removal of pesticides from the source water. The primary use of these models by the Agency at this stage is to provide a coarse screen for sorting out pesticides for which it is highly unlikely that drinking water concentrations would ever exceed human health levels of concern.

Since the models used are considered to be screening tools in the risk assessment process, the Agency does not use estimated environmental concentrations (EECs) from these models to quantify drinking water exposure and risk as a %RfD or %PAD. Instead, drinking water levels of comparison (DWLOCs) are calculated and used as a point of comparison against the model estimates of a pesticide's concentration in water. DWLOCs are theoretical upper limits on a pesticide's concentration in drinking water in light of total aggregate exposure to a pesticide in food, and from residential uses. Since DWLOCs address total aggregate exposure to bifenazate they are further discussed in the aggregate risk sections below.

Based on the FIRST or PRZM/EXAMS and SCI-GROW models the estimated environmental concentrations (EECs) of D1989 for acute exposures are estimated to be 18 parts per billion (ppb) for surface water and less than 1 part per trillion (ppt) for ground water. The EECs for chronic exposures are estimated to be 5 parts per billion (ppb) for surface water and <1 ppt for ground water. These concentrations were based on one application of bifenazate on hops at a maximum rate of 0.75 lb ai/acre/year, and on the assumption that bifenazate totally metabolizes and degrades to D1989.

3. *From non-dietary exposure.* The term ''residential exposure'' is used in this document to refer to non-occupational, non-dietary exposure (e.g., for lawn and garden pest control, indoor pest control, termiticides, and flea and tick control on pets). The currently registered Floramite® (EPA Reg. No. 400–481) and the proposed new product for food uses (Acramite®; EPA File Symbol: 400 LNG) of bifenazate are not expected to result in residential exposures. The Floramite® label allows application of bifenazate to landscape ornamentals at residential/recreational sites by commercial applicators only. The Acramite® label specifies agricultural use only. Therefore, this action assumes that bifenazate products will not be used by homeowners, so no homeowner exposure assessment is included. With respect to post-application residential exposures, the Agency contends that no significant post-application exposure is anticipated from treated ornamentals, either by residents or professional applicators; therefore, no residential post-application assessment is warranted.

4. *Cumulative exposure to substances with a common mechanism of toxicity.* Section 408(b)(2)(D)(v) requires that, when considering whether to establish, modify, or revoke a tolerance, the Agency consider ''available information'' concerning the cumulative effects of a particular pesticide's residues and ''other substances that have a common mechanism of toxicity.''

EPA does not have, at this time, available data to determine whether bifenazate has a common mechanism of toxicity with other substances or how to include this pesticide in a cumulative risk assessment. Unlike other pesticides for which EPA has followed a cumulative risk approach based on a common mechanism of toxicity, bifenazate does not appear to produce a toxic metabolite produced by other substances. For the purposes of this tolerance action, therefore, EPA has not assumed that bifenazate has a common mechanism of toxicity with other substances. For information regarding EPA's efforts to determine which chemicals have a common mechanism of toxicity and to evaluate the cumulative effects of such chemicals, see the final rule for Bifenthrin Pesticide Tolerances (62 FR 62961, November 26, 1997).

D. Safety Factor for Infants and Children

1. *In general.* FFDCA section 408 provides that EPA shall apply an additional tenfold margin of safety for infants and children in the case of threshold effects to account for prenatal and postnatal toxicity and the completeness of the data base on toxicity and exposure unless EPA determines that a different margin of safety will be safe for infants and children. Margins of safety are incorporated into EPA risk assessments either directly through use of a margin of exposure (MOE) analysis or through using uncertainty (safety) factors in calculating a dose level that poses no appreciable risk to humans.

2. *Prenatal and postnatal sensitivity.* There is no qualitative or quantitative toxicity evidence of increased susceptibility of rats and rabbits during

in utero exposure or during post-natal exposure based on developmental toxicity and reproductive toxicity studies performed with bifenazate.

3. *Conclusion*. There is a complete toxicity database for bifenazate and exposure data are complete or are estimated based on data that reasonably accounts for potential exposures. Based on the lack of increased susceptibility and the completeness of the toxicity and exposure databases, EPA has concluded that an additional 10X safety factor is not needed to protect infants and children.

E. Aggregate Risks and Determination of Safety

Because The Agency does not have ground and surface water monitoring data to calculate a quantitative aggregate exposure, DWLOCs were calculated. A DWLOC is a theoretical upper limit on a pesticide's concentration in drinking water in light of total aggregate exposure to a pesticide in food, drinking water, and through residential uses. A DWLOC will vary depending on the toxic endpoint, drinking water consumption, body weights, and pesticide uses. Different populations will have different DWLOCs. The Agency uses DWLOCs in the risk assessment process to assess potential concern for exposure associated with pesticides in drinking water. DWLOC values are not regulatory standards for drinking water. The Agency compares DWLOC values for each relevant population subgroup to the estimated concentration of bifenazate in surface water and ground water from the Agency' screening models. If the DWLOC values are greater than the estimated concentration of bifenazate in surface water and ground water, The Agency concludes with reasonable certainty that exposures to bifenazate in drinking water do not pose a significant human health risk.

To calculate the chronic DWLOCs, the food estimates (from DEEM®) were subtracted from the appropriate PAD value to obtain the maximum water exposure level. DWLOCs were then calculated using the standard body weights and drinking water consumption figures: 70kg/2L (adult male and U.S. population), 60 kg/2L (adult female), and 10kg/1L (infants and children). Because there is no residential exposure to bifenazate, only chronic aggregate exposures are necessary.

1. *Acute risk*. The Agency did not identify an acute endpoint for the general U.S. population, infants, children, and females 13–50 years old. Therefore, an acute risk is expected.

2. *Chronic risk*. The chronic dietary food exposure to bifenazate was estimated at 0.005242 mg/kg/day (52% of cPAD) for infants (< 1 year old) and 0.001557 mg/kg/day (16% of cPAD) for the general U.S. population. The calculated DWLOCs ranged between 48 to 320 ppb for all the population subgroups. The surface and ground water chronic EECs for the bifenazate metabolite D1989 were estimated to be 5 ppb and < 1 part per trillion (ppt), respectively. Since the chronic EECs are less than the Agency's DWLOCs for all population subgroups including infants, the chronic aggregate risk estimates are below the Agency's level of concern. Table 3 summarizes the chronic aggregate exposure to bifenazate.

TABLE 3—CHRONIC AGGREGATE EXPOSURES TO BIFENAZATE RESIDUES.

Scenario/Population Subgroup	cPAD, mg/kg/day	Chronic Food Exposure mg/kg/day	Maximum Chronic Water Exposure[1] mg/kg/day	Ground Water EEC[2], ppt	Surface Water EEC[2], ppb	Chronic DWLOC[3], ppb
U.S. Population	0.01	0.001557	0.008443	<1	5	300
All infants (< 1 year old)	0.01	0.005242	0.004758	<1	5	48
Children (1–6 years old)	0.01	0.003941	0.006059	<1	5	61
Children (7–12 years old)	0.01	0.002343	0.007657	<1	5	77
Females (13–50 years old)	0.01	0.001088	0.008912	<1	5	270
Males (13–19 years old)	0.01	0.000931	0.009069	<1	5	320
Males (20+ years old)	0.01	0.001050	0.00895	<1	5	310
Seniors (55+ years old)	0.01	0.001924	0.008076	<1	5	280

[1] Maximum chronic water exposure (mg/kg/day) = cPAD (mg/kg/day) - chronic food exposure from DEEM® (mg/kg/day); no residential exposure

[2] EECs resulting from one applications at 0.75 lbs ai/acre;

[3] The chronic DWLOCs were calculated as follows: DWLOC (µ/L) = maximum water exposure (mg/kg/day) x body weight (kg)/consumption (L/day) x 0.001 mg/µg

3. *Short-term risk*. A short term risk assessment was not performed because there are no significant exposures anticipated from registered residential non-food uses of bifenazate.

4. *Intermediate-term risk*. An intermediate term risk assessment was not performed because there are no significant post-application exposures anticipated from registered residential non-food uses of bifenazate.

5. *Aggregate cancer risk for U.S. population*. Bifenazate is not carcinogenic.

6. *Determination of safety*. Based on these risk assessments, EPA concludes that there is a reasonable certainty that no harm will result to the general population, and to infants and children from aggregate exposure to bifenazate residues.

IV. Other Considerations

A. Analytical Enforcement Methodology

The analytical methods used in the field trial, processing, and ruminant feeding have been adequately validated and are appropriate for data gathering purposes. The following paragraphs pertain to the proposed plant and livestock enforcement methods.

1. *Plant*. The method proposed for enforcement of the plant tolerances

associated with this petition has been adequately radiovalidated and validated by an independent laboratory. The Agency's Analytical Chemistry Laboratory (ACL) is currently doing a Petition Method Validation (PMV). After reviewing the independent validation, EPA believes that the PMV will at most show that relatively minor modifications or revisions may need to be made. The registrant will be required to make any modifications or revisions to the proposed enforcement method resulting from the PMV.

2. *Livestock*. The method proposed for enforcement of the animal product tolerances associated with this petition has been adequately validated by an independent laboratory. The independent laboratory validation study resulted in marginal recoveries for bifenazate (milk and kidney), D3598 (liver), and A1530-sulfate (kidney). A radiovalidation of the method was not undertaken by the registrant, as the total radioactive bifenazate and its metabolite residues were very low for analytical purposes. However, the analytical method used for quantifying residues in animal tissues were satisfactorily validated on freshly spiked matrices. The ACL is currently doing a PMV. After reviewing the independent validation, EPA believes that the PMV will at most show that relatively minor modifications or revisions may need to be made. The registrant will be required to make any modifications or revisions to the proposed enforcement method resulting from the PMV.

3. *Multiresidue method (MRM)*. The registrant submitted data concerning the recovery of bifenazate and D3598 using FDA multiresidue method protocols A, C, D, E, and F (Pesticide Analytical Manual Vol. I). Acceptable results were only attained using Protocol C. These data were forwarded to FDA for inclusion in the Pesticide Analytical Manual I. The tolerance expression for livestock commodities includes A1530 and A1530-sulfate. The registrant should submit information concerning the behavior of these compounds through the FDA multiresidue protocols.

Adequate enforcement methodology (utilizing reversed phase high pressure liquid chromatography (HPLC) and oxidative coulometric electrochemical detection) is available to enforce the tolerance expression. The method may be requested from: Francis Griffith, Analytical Chemistry Branch, Environmental Science Center, Environmental Protection Agency, 701 Mapes Road, Fort George G. Mead, MD 20755–5350; telephone number: (410) 305–2905; e-mail address: griffith.francis@epa.gov. In addition, Mulitresidue Enforcement Method, Protocol C, has been shown to be adequate for enforcing these tolerances.

B. International Residue Limits

There is neither a CODEX proposal, nor Canadian or Mexican limits for residues of bifenazate and D3598 in/on pome fruit, stone fruit, strawberry, hops, cotton, or grape or for resides of bifenazate, D3598, A1530 and A1530-sulfate in/on livestock commodities. Therefore, harmonization is not an issue for this pesticide tolerance.

C. Conditions

The submitted residue chemistry and toxicological studies are adequate for a conditional registration of bifenazate for food uses. There is high confidence in the hazard end points used for human health risk assessment. However, the following data are being required within 2 years time in order to confirm the results of the studies already reviewed by the Agency and/or to complete the database requirements prior to approval of an unconditional registration of bifenazate:

a. Confirmatory method and interference study for proposed plant and livestock enforcement.

b. Radio validation of proposed livestock enforcement method.

c. FDA multi residue methods testing of A1530 and A1530-sulfate.

d. Storage stability data for hops, strawberry, apple juice, and wet apple pomace.

e. Additional peach field trial data.

f. Additional plum field trial data.

g. Additional grape field trial data.

h. Additional cotton field trial data.

i. 28–day inhalation toxicity study. This study was requested by the Agency for further characterization of inhalation risk assessments. Due to the potential for inhalation exposure, there is concern for toxicity by the inhalation route. The 28–day inhalation toxicity study would give a dose and endpoint examined via the route of exposure of concern (i.e., route specific study) and thus would avoid using an oral study and route-to-route extrapolation. The protocol for the existing 90–day inhalation toxicity study (OPPTS 870.3465) should be followed with the exposure (treatment) ending after 28 days, instead of 90 days.

The rationale for not requiring these data before registration of food uses are provided below:

1. *Deficiencies a, b and c*. Adequate analytical methods are available for enforcement purposes. These methods were independently validated and a petition method validation is in progress at the Agency's Analytical Chemistry Laboratory. In addition, a Mulitresidue Enforcement Method, Protocol C, has been shown to be adequate for enforcing these tolerances.

2. *Deficiencies d through h*. The storage interval of almost all commodity samples collected from the field trial and processing have been validated. The storage interval for hops, strawberry, apple juice, and wet apple pomace were not validated as required and are necessary to confirm the submitted residue chemistry data. The Agency concluded that the interval from sampling until analysis was reasonable and will not invalidate the submitted data due to lack of stability of bifenazate residues of concern. For peach, plum, grape and cotton, the requirements are additional field trials to fulfil the geographical distribution and also to confirm the data already submitted and reviewed by the Agency. The crops and number of trials required are peach(2), plum(1), grape(1) and cotton(1).

3. *Deficiency i*. Bifenazate is not acutely toxic by oral, dermal or inhalation routes (Toxicity category IV). Because of low inhalation toxicity, the registrant did not do a subchronic inhalation toxicity and its absence, the Agency used for endpoint selection the oral NOAELs for short-, intermediate- and long-term inhalation exposure risk assessment for this action. To fully characterize the toxicity potential by inhalation route of exposure over long term use of bifenazate, a 28–day inhalation study is required.

V. Conclusion

Therefore, the tolerances are established for combined residues of bifenazate and D3598 (expressed as bifenazate) in or on apple, wet pomace at 1.2 ppm; cattle fat at 0.1 ppm; cotton, undelinted seed at 0.75 ppm; cotton, gin byproducts at 35 ppm; fruit, pome, group at 0.75 ppm; goat fat at 0.1 pm; grape 0.75 ppm; grape, raisin at 1.2 ppm; hog fat at 0.1 ppm; hop, dried cones at 15 ppm; horse fat at 0.1 ppm; nectarine at 1.7 ppm; peach at 1.7 ppm; plum at 0.30 ppm; sheep fat at 0.1 ppm strawberry at 1.5 ppm and combined residues of bifenazate, D3598 (expressed a bifenazate), A1530 and A1530-sulfate (expressed as A1530) in cattle meat at 0.01 ppm; cattle meat byproducts at 0.01 ppm; goat meat at 0.01 ppm; goat meat byproducts at 0.01 ppm; hog meat at 0.01 ppm; hog meat byproducts at 0.01 ppm; horse meat at 0.01 ppm; horse meat byproducts at 0.01 ppm; milk at 0.01 ppm; sheep meat at 0.01 ppm; and sheep meat byproducts at 0.01 ppm.

Some of the tolerance values requested by the registrant in their petition are different from that

determined by the Agency. The differences are due to the following reasons: The registrant requested a group tolerance for stone fruits. This is not appropriate at this time as no field trial data were submitted on cherry and apricot and/or the maximum peach (1.45 ppm) and plum (0.15 ppm) residue varied by a factor > 5x. In the case of undelinted cotton seeds and cotton gin byproducts, the Agency concluded that a higher tolerance of 0.75 ppm and 35 ppm are required as compared with 0.5 ppm and 20 ppm, respectively, for the combined residues of bifenazate and D3598 (expressed as bifenazate) due to the correction factors applied to the percent recoveries of residues for concern in the storage stability study. For meat of cattle, goat, hog, horse and sheep the registrant requested a 0.02 ppm tolerance; however, the Agency concluded that the bifenazate level used in the animal feeding study (maximum theoretical dietary burden) supports only 0.01 ppm for the combined residues of bifenazate, D3598 (expressed as bifenazate), A1530 and A1530-sulfate (expressed as A1530).

VI. Objections and Hearing Requests

Under section 408(g) of the FFDCA, as amended by the FQPA, any person may file an objection to any aspect of this regulation and may also request a hearing on those objections. The EPA procedural regulations which govern the submission of objections and requests for hearings appear in 40 CFR part 178. Although the procedures in those regulations require some modification to reflect the amendments made to the FFDCA by the FQPA of 1996, EPA will continue to use those procedures, with appropriate adjustments, until the necessary modifications can be made. The new section 408(g) provides essentially the same process for persons to ''object'' to a regulation for an exemption from the requirement of a tolerance issued by EPA under new section 408(d), as was provided in the old FFDCA sections 408 and 409. However, the period for filing objections is now 60 days, rather than 30 days.

A. What Do I Need to Do to File an Objection or Request a Hearing?

You must file your objection or request a hearing on this regulation in accordance with the instructions provided in this unit and in 40 CFR part 178. To ensure proper receipt by EPA, you must identify docket control number OPP–301206 in the subject line on the first page of your submission. All requests must be in writing, and must be mailed or delivered to the Hearing Clerk on or before April 2, 2002.

1. *Filing the request*. Your objection must specify the specific provisions in the regulation that you object to, and the grounds for the objections (40 CFR 178.25). If a hearing is requested, the objections must include a statement of the factual issues(s) on which a hearing is requested, the requestor's contentions on such issues, and a summary of any evidence relied upon by the objector (40 CFR 178.27). Information submitted in connection with an objection or hearing request may be claimed confidential by marking any part or all of that information as CBI. Information so marked will not be disclosed except in accordance with procedures set forth in 40 CFR part 2. A copy of the information that does not contain CBI must be submitted for inclusion in the public record. Information not marked confidential may be disclosed publicly by EPA without prior notice.

Mail your written request to: Office of the Hearing Clerk (1900), Environmental Protection Agency, 1200 Pennsylvania Ave., NW., Washington, DC 20460. You may also deliver your request to the Office of the Hearing Clerk in Rm. C400, Waterside Mall, 401 M St., SW., Washington, DC 20460. The Office of the Hearing Clerk is open from 8 a.m. to 4 p.m., Monday through Friday, excluding legal holidays. The telephone number for the Office of the Hearing Clerk is (202) 260–4865.

2. *Tolerance fee payment*. If you file an objection or request a hearing, you must also pay the fee prescribed by 40 CFR 180.33(i) or request a waiver of that fee pursuant to 40 CFR 180.33(m). You must mail the fee to: EPA Headquarters Accounting Operations Branch, Office of Pesticide Programs, P.O. Box 360277M, Pittsburgh, PA 15251. Please identify the fee submission by labeling it ''Tolerance Petition Fees.''

EPA is authorized to waive any fee requirement ''when in the judgement of the Administrator such a waiver or refund is equitable and not contrary to the purpose of this subsection.'' For additional information regarding the waiver of these fees, you may contact James Tompkins by phone at (703) 305–5697, by e-mail at tompkins.jim@epa.gov, or by mailing a request for information to Mr. Tompkins at Registration Division (7505C), Office of Pesticide Programs, Environmental Protection Agency, 1200 Pennsylvania Ave., NW., Washington, DC 20460.

If you would like to request a waiver of the tolerance objection fees, you must mail your request for such a waiver to: James Hollins, Information Resources and Services Division (7502C), Office of Pesticide Programs, Environmental Protection Agency, 1200 Pennsylvania Ave., NW., Washington, DC 20460.

3. *Copies for the Docket*. In addition to filing an objection or hearing request with the Hearing Clerk as described in Unit VI.A., you should also send a copy of your request to the PIRIB for its inclusion in the official record that is described in Unit I.B.2. Mail your copies, identified by docket control number OPP–301206, to: Public Information and Records Integrity Branch, Information Resources and Services Division (7502C), Office of Pesticide Programs, Environmental Protection Agency, 1200 Pennsylvania Ave., NW., Washington, DC 20460. In person or by courier, bring a copy to the location of the PIRIB described in Unit I.B.2. You may also send an electronic copy of your request via e-mail to: opp-docket@epa.gov. Please use an ASCII file format and avoid the use of special characters and any form of encryption. Copies of electronic objections and hearing requests will also be accepted on disks in WordPerfect 6.1/8.0 or ASCII file format. Do not include any CBI in your electronic copy. You may also submit an electronic copy of your request at many Federal Depository Libraries.

B. When Will the Agency Grant a Request for a Hearing?

A request for a hearing will be granted if the Administrator determines that the material submitted shows the following: There is a genuine and substantial issue of fact; there is a reasonable possibility that available evidence identified by the requestor would, if established resolve one or more of such issues in favor of the requestor, taking into account uncontested claims or facts to the contrary; and resolution of the factual issues(s) in the manner sought by the requestor would be adequate to justify the action requested (40 CFR 178.32).

VII. Regulatory Assessment Requirements

This final rule establishes a tolerance under FFDCA section 408(d) in response to a petition submitted to the Agency. The Office of Management and Budget (OMB) has exempted these types of actions from review under Executive Order 12866, entitled *Regulatory Planning and Review* (58 FR 51735, October 4, 1993). Because this rule has been exempted from review under Executive Order 12866 due to its lack of significance, this rule is not subject to Executive Order 13211, *Actions Concerning Regulations That Significantly Affect Energy Supply, Distribution, or Use* (66 FR 28355, May 22, 2001). This final rule does not

contain any information collections subject to OMB approval under the Paperwork Reduction Act (PRA), 44 U.S.C. 3501 *et seq.*, or impose any enforceable duty or contain any unfunded mandate as described under Title II of the Unfunded Mandates Reform Act of 1995 (UMRA) (Public Law 104–4). Nor does it require any special considerations under Executive Order 12898, entitled *Federal Actions to Address Environmental Justice in Minority Populations and Low-Income Populations* (59 FR 7629, February 16, 1994); or OMB review or any Agency action under Executive Order 13045, entitled *Protection of Children from Environmental Health Risks and Safety Risks* (62 FR 19885, April 23, 1997). This action does not involve any technical standards that would require Agency consideration of voluntary consensus standards pursuant to section 12(d) of the National Technology Transfer and Advancement Act of 1995 (NTTAA), Public Law 104–113, section 12(d) (15 U.S.C. 272 note). Since tolerances and exemptions that are established on the basis of a petition under FFDCA section 408(d), such as the tolerance in this final rule, do not require the issuance of a proposed rule, the requirements of the Regulatory Flexibility Act (RFA) (5 U.S.C. 601 *et seq.*) do not apply. In addition, the Agency has determined that this action will not have a substantial direct effect on States, on the relationship between the national government and the States, or on the distribution of power and responsibilities among the various levels of government, as specified in Executive Order 13132, entitled *Federalism*(64 FR 43255, August 10, 1999). Executive Order 13132 requires EPA to develop an accountable process to ensure ''meaningful and timely input by State and local officials in the development of regulatory policies that have federalism implications.'' ''Policies that have federalism implications'' is defined in the Executive Order to include regulations that have ''substantial direct effects on the States, on the relationship between the national government and the States, or on the distribution of power and responsibilities among the various levels of government.'' This final rule directly regulates growers, food processors, food handlers and food retailers, not States. This action does not alter the relationships or distribution of power and responsibilities established by Congress in the preemption provisions of FFDCA section 408(n)(4). For these same reasons, the Agency has determined that this rule does not have any ''tribal implications'' as described in Executive Order 13175, entitled *Consultation and Coordination with Indian Tribal Governments* (65 FR 67249, November 6, 2000). Executive Order 13175, requires EPA to develop an accountable process to ensure ''meaningful and timely input by tribal officials in the development of regulatory policies that have tribal implications.'' ''Policies that have tribal implications'' is defined in the Executive Order to include regulations that have ''substantial direct effects on one or more Indian tribes, on the relationship between the Federal government and the Indian tribes, or on the distribution of power and responsibilities between the Federal government and Indian tribes.'' This rule will not have substantial direct effects on tribal governments, on the relationship between the Federal government and Indian tribes, or on the distribution of power and responsibilities between the Federal government and Indian tribes, as specified in Executive Order 13175. Thus, Executive Order 13175 does not apply to this rule.

VIII. Submission to Congress and the Comptroller General

The Congressional Review Act, 5 U.S.C. 801 *et seq.*, as added by the Small Business Regulatory Enforcement Fairness Act of 1996, generally provides that before a rule may take effect, the agency promulgating the rule must submit a rule report, which includes a copy of the rule, to each House of the Congress and to the Comptroller General of the United States. EPA will submit a report containing this rule and other required information to the U.S. Senate, the U.S. House of Representatives, and the Comptroller General of the United States prior to publication of this final rule in the **Federal Register**. This final rule is not a ''major rule'' as defined by 5 U.S.C. 804(2).

List of Subjects in 40 CFR Part 180

Environmental protection, Administrative practice and procedure, Agricultural commodities, Pesticides and pests, Reporting and record keeping requirements.

Dated: January 15, 2002.

James Jones,

Acting Director, Office of Pesticide Programs.

Therefore, 40 CFR chapter I is amended as follows:

PART 180—[AMENDED]

1. The authority citation for part 180 continues to read as follows:

Authority: 21 U.S.C. 321(q), 346(a) and 371.

2. Section 180.572 is amended by adding text to paragraph (a) to read as follows:

§ 180.572 Bifenazate; tolerances for residues.

(a) *General.* (1) Tolerances are established for combined residues of bifenazate (hydrazinecarboxylic acid, 2-(4-methoxy-1,1'-biphenyl]-3-yl), 1-methylethyl ester) and D3598 expressed as bifenazate (diazinecarboxylic acid, 2-(4-methoxy-1,1'-biphenyl]-3-yl), 1-methylethylester) in or on the following commodities:

Commodity	Parts per million
Apple, wet pomace	1.2
Cattle, fat	0.1
Cotton, gin byproducts	35
Cotton, undelinted seed	0.75
Fruit, pome, group	0.75
Goat, fat	0.1
Grape	0.75
Grape, raisin	1.2
Hog, fat	0.1
Hop, dried cones	15
Horse, fat	0.1
Nectarine	1.7
Peach	1.7
Plum	0.3
Sheep, fat	0.1
Strawberry	1.5

(2) Tolerances are established for combined residues of bifenazate (hydrazinecarboxylic acid, 2-(4-methoxy-1,1'-biphenyl]-3-yl), 1-methylethyl ester) and D3598 expressed as bifenazate (diazinecarboxylic acid, 2-(4-methoxy-[1,1'-biphenyl]-3-yl), 1-methylethylester), A1530 (1,1'-biphenyl, 4-ol) and A1530-sulfate expressed as A1530 (1,1'-biphenyl, 4-oxysulfonic acid) in the following animal commodities:

Commodity	Parts per million
Cattle, meat	0.01
Cattle, meat byproducts	0.01
Goat, meat	0.01
Goat, meat byproducts	0.01
Hog, meat	0.01
Hog, meat byproducts	0.01
Horse, meat	0.01
Horse, meat byproducts	0.01
Milk	0.01
Sheep, meat	0.01
Sheep, meat byproducts	0.01

* * * * *

[FR Doc. 02–2612 Filed 1–31–02; 8:45 am]

BILLING CODE 6560–50–S

GENERAL SERVICES ADMINISTRATION

41 CFR Part 302–11

[FTR Amendment 102]

RIN 3090–AH55

Federal Travel Regulation; Relocation Income Tax (RIT) Allowance Tax Tables

AGENCY: Office of Governmentwide Policy, GSA.

ACTION: Final rule.

SUMMARY: The Federal, State, and Puerto Rico tax tables for calculating the relocation income tax (RIT) allowance must be updated yearly to reflect changes in Federal, State, and Puerto Rico income tax brackets and rates. The Federal, State, and Puerto Rico tax tables contained in this rule are for calculating the 2002 RIT allowance to be paid to relocating Federal employees.

DATES: This final rule is effective January 1, 2002, and applies for RIT allowance payments made on or after January 1, 2002.

FOR FURTHER INFORMATION CONTACT: Calvin L. Pittman, Office of Governmentwide Policy, Travel Management Policy (MTT), Washington, DC 20405, telephone (202) 501–1538.

SUPPLEMENTARY INFORMATION: This amendment provides the tax tables necessary to compute the relocation income tax (RIT) allowance for employees who are taxed in 2002 on moving expense reimbursements.

A. Background

Section 5724b of Title 5, United States Code, provides for reimbursement of substantially all Federal, State, and local income taxes incurred by a transferred Federal employee on taxable moving expense reimbursements. Policies and procedures for the calculation and payment of a RIT allowance are contained in the Federal Travel Regulation (41 CFR part 302–11). The Federal, State, and Puerto Rico tax tables for calculating RIT allowance payments are updated yearly to reflect changes in Federal, State, and Puerto Rico income tax brackets and rates.

B. Executive Order 12866

The General Services Administration (GSA) has determined that this final rule is not a significant regulatory action for the purposes of Executive Order 12866 of September 30, 1993.

C. Regulatory Flexibility Act

This final rule is not required to be published in the **Federal Register** for notice and comment; therefore, the Regulatory Flexibility Act, 5 U.S.C. 601 *et seq.*, does not apply.

D. Paperwork Reduction Act

The Paperwork Reduction Act does not apply because this final rule does not impose recordkeeping or information collection requirements, or the collection of information from offerors, contractors, or members of the public which require the approval of the Office of Management and Budget under 44 U.S.C. 3501 *et seq.*

E. Small Business Regulatory Enforcement Fairness Act

This final rule is also exempt from Congressional review prescribed under 5 U.S.C. 801 since it relates solely to agency management and personnel.

List of Subjects in 41 CFR Part 302–11

Government employees, Income taxes, Relocation allowances and entitlements, Transfers, Travel and transportation expenses.

For the reasons set forth in the preamble, 41 CFR part 302–11 is amended as follows:

PART 302—RELOCATION INCOME TAX (RIT) ALLOWANCE

1. The authority citation for 41 CFR part 302–11 continues to read as follows:

Authority: 5 U.S.C. 5738; 20 U.S.C. 905(a); E.O. 11609, 36 FR 13747, 3 CFR, 1971–1975 Comp., p. 586.

2. Appendixes A, B, C, and D to part 302–11 currently in effect are amended by adding the following tables at the end of each appendix, respectively, to read as follows:

Appendix A to Part 302–11—Federal Tax Tables for RIT Allowance

* * * * * * *

Federal Marginal Tax Rates by Earned Income Level and Filing Status—Tax Year 2001

The following table is to be used to determine the Federal marginal tax rate for Year 1 for computation of the RIT allowance as prescribed in § 302–11.8(e)(1). The following table is to be used for employees whose Year 1 occurred during calendar year 2001:

Marginal Tax Rate	Single Taxpayer		Heads of Household		Married Filing Jointly/Qualifying Widows & Widowers		Married Filing Separately	
Percent	Over	But Not Over	Over	But Not Over	Over	But Not Over	Over	But Not Over
15	$7,582	$35,363	$13,905	$51,016	$18,061	$65,011	$8,742	$32,028
28	35,363	77,472	51,016	116,612	65,011	133,818	32,028	65,470
31	77,472	154,524	116,612	180,660	133,818	193,566	65,470	99,363
36	154,524	317,548	180,660	324,522	193,566	323,455	99,363	169,100
39.6	317,548	.....	324,522	.....	323,455	.....	169,100	.....

Appendix B to Part 302–11—State Tax Tables for RIT Allowance

* * * * *

State Marginal Tax Rates by Earned Income Level—Tax Year 2001

The following table is to be used to determine the State marginal tax rates for calculation of the RIT allowance as prescribed in § 301–11.8(e)(2). The following table is to be used for employees who received covered taxable reimbursements during calendar year 2001:

Marginal tax rates (stated in percents) for the earned income amounts specified in each column.[1] [2]				
State (or District)	$20,000–$24,999	$25,000–$49,999	$50,000–$74,999	$75,000 & Over
Alabama	5	5	5	5
Alaska	0	0	0	0
Arizona	2.87	3.2	3.74	5.04
Arkansas	4.5	7	7	7
If single status [3]	6	7	7	7
California	2	4	8	9.3
If single status [4]	4	8	8	9.3
Colorado	4.63	4.63	4.63	4.63
Connecticut	4.5	4.5	4.5	4.5
Delaware	5.2	5.55	5.95	5.95
District of Columbia	7.5	9.5	9.5	9.5
Florida	0	0	0	0
Georgia	6	6	6	6
Hawaii	6.9	7.9	8.5	8.5
If single status [3]	7.9	8.5	8.5	8.5
Idaho	7.4	7.8	7.8	7.8
Illinois	3	3	3	3
Indiana	3.4	3.4	3.4	3.4
Iowa	6.48	7.92	8.98	8.98
If single status [3]	6.8	7.92	8.98	8.98
Kansas	3.5	6.25	6.25	6.45
If single status [3]	6.25	6.45	6.45	6.45
Kentucky	6	6	6	6
Louisiana	2	4	4	6
If single status [3]	4	4	6	6
Maine	4.5	7	8.5	8.5
If single status [3]	7	8.5	8.5	8.5
Maryland	4.8	4.8	4.8	4.8
Massachusetts	5.85	5.85	5.85	5.85
Michigan	4.2	4.2	4.2	4.2
Minnesota	5.36	7.05	7.05	7.85
If single status [3]	7.05	7.05	7.05	7.85
Mississippi	5	5	5	5
Missouri	6	6	6	6
Montana	9	10	11	11
Nebraska	3.49	5.01	6.68	6.68
If single status [3]	5.01	6.68	6.68	6.68
Nevada	0	0	0	0
New Hampshire	0	0	0	0
New Jersey	1.4	1.75	2.45	6.37
If single status [3]	1.4	3.5	5.525	6.37
New Mexico	3.2	6	7.1	8.2
If single status [3]	6	7.1	7.9	8.2
New York	4	5.25	6.85	6.85
If single status [3]	5.25	6.85	6.85	6.85
North Carolina	6	7	7	7.75
North Dakota	6.67	9.33	12	12
If single status [3]	8	10.67	12	12
Ohio	3.715	4.457	5.201	6.9
Oklahoma	5	6.75	6.75	6.75
If single status [3]	6.75	6.75	6.75	6.75
Oregon	9	9	9	9
Pennsylvania	2.8	2.8	2.8	2.8
Rhode Island [4]	25.5	25.5	25.5	25.5
South Carolina	7	7	7	7
South Dakota	0	0	0	0
Tennessee	0	0	0	0
Texas	0	0	0	0
Utah	7	7	7	7
Vermont [5]	24	24	24	24
Virginia	5	5.75	5.75	5.75
Washington	0	0	0	0
West Virginia	4	4.5	6	6.5
Wisconsin	6.5	6.75	6.75	6.75
Wyoming	0	0	0	0

[1] Earned income amounts that fall between the income brackets shown in this table (e.g., $24,999.45, $49,999.75) should be rounded to the nearest dollar to determine the marginal tax rate to be used in calculating the RIT allowance.

[2] If the earned income amount is less than the lowest income bracket shown in this table, the employing agency shall establish an appropriate marginal tax rate as provided in § 302–11.8(e)(2)(ii).

[3] This rate applies only to those individuals certifying that they will file under a single status within the States where they will pay income taxes. All other taxpayers, regardless of filing status, will use the other rate shown.

[4] The income tax rate for Rhode Island is 25.5 percent of Federal income tax liability for all employees. Rates shown as a percent of Federal income tax liability must be converted to a percent of income as provided in § 302–11.8(e)(2)(iii).

[5] The income tax rate for Vermont is 24 percent of Federal income tax liability for all employees. Rates shown as a percent of Federal income tax liability must be converted to a percent of income as provided in § 302–11.8(e)(2)(iii).

Appendix C to Part 302–11—Federal Tax Tables for RIT Allowance—Year 2

* * * * * * *

Federal Marginal Tax Rates by Earned Income Level and Filing Status—Tax Year 2002

The following table is to be used to determine the Federal marginal tax rate for Year 2 for computation of the RIT allowance as prescribed in § 302–11.8(e)(1). The following table is to be used for employees whose Year 1 occurred during calendar years 1992, 1993, 1994, 1995, 1996, 1997, 1998, 1999, 2000 or 2001:

Marginal tax rate Percent	Single Taxpayer		Heads of Household		Married Filing Jointly/Qualifying Widows & Widowers		Married filing separately	
	Over	But not over	Over	But not over	Over	But not over	Over	But not over
10	$8,137	$14,130	$14,743	$24,811	$20,219	$31,833	$11,770	$16,693
15	14,130	37,040	24,811	53,556	31,833	67,914	16,693	33,839
27	37,040	80,140	53,556	118,624	67,914	139,528	33,839	69,420
30	80,140	158,281	118,624	184,826	139,528	201,236	69,420	105,672
35	158,281	326,339	184,826	337,037	201,236	335,297	105,672	178,317
38.6	326,339	.....	337,037	.....	335,297	.....	178,317	.....

Appendix D to Part 302–11—Puerto Rico Tax Tables for RIT Allowance

* * * * * * *

Puerto Rico Marginal Tax Rates by Earned Income Level—Tax Year 2001

The following table is to be used to determine the Puerto Rico marginal tax rate for computation of the RIT allowance as prescribed in § 302–11.8(e)(4)(i):

Marginal Tax Rate Percent	Single Filing Status		Any Other Filing Status	
	Over	But Not Over	Over	But Not Over
11	.....	.....	.....	$25,000
16.5	.....	$25,000	.....	.....
29.5	$25,000	50,000	$25,000	50,000
33	50,000	.....	50,000	.....

Dated: January 25, 2002.

Stephen A. Perry,

Administrator of General Services.

[FR Doc. 02–2431 Filed 1–31–02; 8:45 am]

BILLING CODE 6820–34–P

Rules and Regulations

Federal Register
Vol. 67, No. 22
Friday, February 1, 2002

This section of the FEDERAL REGISTER contains regulatory documents having general applicability and legal effect, most of which are keyed to and codified in the Code of Federal Regulations, which is published under 50 titles pursuant to 44 U.S.C. 1510.

The Code of Federal Regulations is sold by the Superintendent of Documents. Prices of new books are listed in the first FEDERAL REGISTER issue of each week.

DEPARTMENT OF AGRICULTURE

Animal and Plant Health Inspection Service

7 CFR Part 319

[Docket No. 99–099–2]

RIN 0579–AB17

Importation of Unshu Oranges From Japan

AGENCY: Animal and Plant Health Inspection Service, USDA.

ACTION: Final rule.

SUMMARY: We are amending the regulations governing the importation of citrus fruit to allow, under certain conditions, Unshu oranges grown on Kyushu Island, Japan, to be imported into non-citrus-producing areas of the United States. We are also amending the regulations for importing Unshu oranges from Honshu Island, Japan, by requiring fumigation using methyl bromide prior to exportation and by allowing the fruit to be distributed to additional areas in the United States, including citrus-producing areas. In addition, we are removing the requirement for individually wrapping Unshu oranges imported from Japan or the Republic of Korea. These actions would relieve restrictions on the importation into and distribution within the United States of Unshu oranges without presenting a significant risk of introducing citrus canker or other diseases or pests of plants.

EFFECTIVE DATE: January 28, 2002.

FOR FURTHER INFORMATION CONTACT: Dr. Inder P. Gadh, Import Specialist, Phytosanitary Issues Management Team, PPQ, APHIS, 4700 River Road Unit 140, Riverdale, MD 20737–1236; (301) 734–6799.

SUPPLEMENTARY INFORMATION:

Background

Citrus canker is a disease that affects citrus and is caused by the infectious bacterium *Xanthomonas campestris* pv. *citri* (Hasse) Dye. The strain of citrus canker that occurs in Japan infects twigs, leaves, and fruit in a wide spectrum of citrus species.

Currently, the regulations in 7 CFR 319.28 (referred to below as the regulations) prohibit the importation of citrus from Eastern and Southeastern Asia, Japan, Brazil, Paraguay, and other designated areas, with certain exceptions. One exception is for Unshu oranges (*Citrus reticulata* Blanco var. *unshu,* also known as Satsuma) grown in citrus-canker-free areas of Japan or on Cheju Island, Republic of Korea. After meeting certain growing, packing, and inspection requirements, Unshu oranges may be imported from these areas of Japan and Korea into any area of the United States except American Samoa, Arizona, California, Florida, Louisiana, the Northern Mariana Islands, Puerto Rico, Texas, and the U.S. Virgin Islands. Also, under the regulations in 7 CFR 301.11, the interstate movement of Unshu oranges is prohibited from any State or area into which they may be imported into or through any State or area where importation is prohibited under § 319.28.

Unshu oranges eligible for importation into the United States are grown under a system of safeguards in citrus-canker-free areas in Japan and Korea. Unshu oranges are known to be resistant to citrus canker, and the system of safeguards established in the regulations for Unshu oranges approximately 30 years ago has proven effective, as evidenced by the record of citrus-canker-free imports.

On April 18, 2001, we published in the **Federal Register** (66 FR 19892–19898, Docket No. 99–099–1) a proposed rule to amend regulations governing the importation of citrus fruit to allow, under certain conditions, Unshu oranges grown on Kyushu Island, Japan, to be imported into non-citrus-producing areas of the United States. We also proposed to amend the regulations for importing Unshu oranges from Honshu Island, Japan, by requiring fumigation using methyl bromide prior to exportation and by allowing the fruit to be distributed to additional areas in the United States, including citrus-producing areas. Finally, we proposed to remove the requirement for individually wrapping Unshu oranges imported from Japan or the Republic of Korea.

We solicited comments concerning our proposal for 60 days ending June 18, 2001. We received five comments by that date. These comments were from State agricultural agencies, a citrus growers cooperative, and a university. All of the commenters raised specific concerns regarding the proposed rule. Those concerns are discussed below by topic.

Two commenters opposed allowing Unshu oranges from Japan to enter citrus-producing areas of the United States under any conditions due to the risk of citrus canker. One of the commenters argued that fruit treatments and growing area inspections have not been conclusively proven to eliminate that risk. We believe that the risk of citrus canker being introduced into citrus-producing areas via imported Unshu oranges is almost nonexistent. The pest risk assessment estimated that the probability of the citrus canker bacterium (*Xanthomonas campestris* pv. *citri*) from imported Unshu orange fruits coming in contact with and infecting a suitable host material and establishing was nearly zero. The published literature indicates that no authenticated outbreak of citrus canker has ever been traced back to the importation of infected fruit. In addition, the Unshu oranges are known for their resistance to the disease.

Three commenters opposed removing the requirement to wrap individual oranges, especially given some Unshu oranges from Japan would be allowed into citrus-producing areas and others would not. These commenters argued that once cartons are opened and fruit distributed, it would be difficult to identify the origin of individual oranges. As we noted in the proposed rule, we will continue to require that each box containing fruit will have to be clearly marked with the States into which the fruit may be imported, and from which they are prohibited removal under a Federal plant quarantine. Our experience has shown that Unshu oranges are marketed and retailed by the box. We do not think that wrapping of individual fruits with tissue paper provides additional phytosanitary security; any importers engaged in swapping boxes to misrepresent the

origin (i.e., Kyushu-grown oranges in Honshu boxes) could also engage in swapping or fabricating wrapping papers.

Three commenters suggested that methyl bromide fumigation should be required for all Unshu oranges entering the United States from Japan, not just for Unshu oranges grown on Honshu. One of these commenters argued that three mealybugs identified in the pest risk assessment (*Planococcus kraunhiae, P. lilacinus,* and *Pseudococcus cryptus*) have a relatively wide host range and could move from imported Unshu oranges to other host material and become established in the United States. APHIS' fumigation requirement for the oranges grown on Honshu is an additional protective measure imposed because the Honshu-grown fruit can be distributed in U.S. citrus-producing areas. Because the distribution of Kyushu-grown fruit will be limited to non-citrus-producing areas, we believe that the existing safeguards will be sufficient. During the required inspections by APHIS personnel in Japan and at the U.S. port of entry, APHIS inspectors specifically target mealybugs; any shipments of Unshu oranges from Kyushu or Honshu found to be infested with mealybugs (or any other quarantine significant pest) will be prohibited entry into the United States.

Two commenters suggested that APHIS should update the 1995 pest risk assessment ''Importation of Japanese Unshu Orange Fruit into Citrus Producing States,'' given the age of the document and the fact that Japan's work plan for the Unshu orange program does not refer to some of the pests identified as quarantine significant (e.g., the citrus fruit fly) in the pest risk assessment. We believe that the 1995 risk assessment is still applicable, given that no incidence of citrus canker or finding of a new pest of concern in the Japanese production areas has been reported or recorded since the assessment was prepared. With regard to Japan's work plan, it has not been necessary for that document to address the citrus fruit fly because that pest is not known to occur on Honshu, which has been the only area from which Unshu oranges could be imported into the United States. We will work with Japanese officials to ensure that the programmatic changes resulting from this rule are reflected in an updated work plan.

Two commenters suggested that the risks presented by citrus canker and citrus greening would require that minimal acceptable growing and domestic movement standards within Japan be the same as those imposed on Florida for movement of commercial citrus. Citrus greening disease and its vector, *Diaphorina citri,* are reported as occurring only in the Ryuku Archipelago in Japan and have not been reported on Honshu or Kyushu. While *D. citri* was detected in southeastern Florida in June 1998—the only reported detection of the pest in the United States—populations of the pest are being controlled through a classical biological control program, according to a pest alert prepared by the University of Florida and the Florida Department of Agriculture and Consumer Services, Division of Plant Industry. Further, *D. citri* breeds exclusively on young flush and feeds on leaves and shoots of citrus, and the citrus greening bacterium is phloem restricted, making the fruit an unlikely pathway for the vector or the disease. With regard to citrus canker, we have noted in this document and elsewhere that Unshu oranges themselves are highly resistant to citrus canker and the required growing conditions in Japan all but eliminate the risk of citrus canker being introduced via Unshu oranges from Japan.

Therefore, for the reasons given in the proposed rule and in this document, we are adopting the proposed rule as a final rule, without change.

Effective Date

This is a substantive rule that relieves restrictions and, pursuant to the provisions of 5 U.S.C. 553, may be made effective less than 30 days after publication in the **Federal Register**.

Immediate implementation of this rule is necessary to provide relief to those persons who are adversely affected by restrictions we no longer find warranted. The shipping season for Unshu oranges from Japan is in progress. Making this rule effective immediately will allow interested producers and others in the marketing chain to benefit during this year's shipping season. Therefore, the Administrator of the Animal and Plant Health Inspection Service has determined that this rule should be effective upon signature.

Executive Order 12866 and Regulatory Flexibility Act

This final rule has been reviewed under Executive Order 12866. The rule has been determined to be not significant for the purposes of Executive Order 12866 and, therefore, has not been reviewed by the Office of Management and Budget.

The economic analysis for the changes in this document is set forth below. It provides a cost-benefit analysis as required by Executive Order 12866 and an analysis of the potential economic effects on small entities as required by the Regulatory Flexibility Act.

In the data used to prepare this analysis, the terms ''tangerine'' and ''mandarin'' are generally interchangeable. Both refer to varieties of *Citrus reticulata*. For example, National Agricultural Statistics Service (NASS) production data are aggregated under ''tangerine,'' while Census Bureau trade data use the term ''mandarin.'' Because of its familiarity, we use only the term ''tangerine'' in this analysis.

Unshu oranges (*Citrus reticulata* var. *unshu*) are a variety of tangerine currently allowed to be imported into the United States from citrus canker-free production areas of Japan and Korea. They may be imported into any part of the United States except for commercial citrus-producing areas. This rule amends the provisions regarding the importation of Unshu oranges from Honshu Island, where all such shipments from Japan originated prior to this rule, and allow importations from four prefectures on Kyushu Island. Unshu oranges imported from Honshu Island will no longer be prohibited from being distributed in five citrus-producing States (Arizona, California, Florida, Louisiana, and Texas), and postharvest treatment with methyl bromide will be mandatory. Unshu oranges from Kyushu Island will be prohibited from being distributed in those five citrus-producing States, American Samoa, the Northern Mariana Islands, Puerto Rico, and the U.S. Virgin Islands, and methyl bromide treatment will not be mandatory. This rule also removes the requirement that imported Unshu oranges be individually wrapped, regardless of whether they come from Japan or Korea.

Because Unshu oranges are not grown in the United States, entities that might be affected by this rule will be producers of other tangerine varieties, assuming Unshu oranges can be considered a substitute fruit. Annual receipts of $750,000 or less is the small-entity criterion set by the Small Business Administration for establishments primarily engaged in the production of citrus fruits. Most tangerine producers in the United States are small entities. Although the *1997 Census of Agriculture* excluded information on California's ''honey tangerine'' growers to avoid disclosing data for individual farms, the information that is available for ''other tangerine'' growers in California and other States indicates that most operations are small.

Quantities of Unshu oranges imported from Japan and Korea between 1994 and 1999 are shown in Table 1. Unshu orange imports from Japan between 1994 and 1999 averaged 240 metric tons per year.

TABLE 1—UNSHU ORANGE IMPORTS BY THE UNITED STATES FROM JAPAN AND KOREA

[In metric tons]

Year	Japan	Korea	Total
1994	324	.....	324
1995	232	43	275
1996	165	214	379
1997	144	887	1,031
1998	224	31	255
1999	349	377	726

Source: Ministry of Agriculture, Forestry and Fisheries, Japan.

Japan's Ministry of Agriculture, Forestry and Fisheries is unable to project future Unshu orange exports to the United States that may result from this final rule. For the purposes of this analysis, therefore, we estimated that the level of imports would be double the 1994–1999 average, i.e., 480 metric tons per year. Adding to this amount the average of yearly imports from Korea shown in Table 1, namely, 310 metric tons, would mean 790 metric tons of Unshu oranges imported annually. The estimated increase in imports from Japan may be too high, but we do not have information that would allow a more factually based projection. A high estimate of the potential increase in Japan's Unshu orange exports to the United States lends confidence to our conclusion regarding the potential economic effect on U.S. tangerine producers.

U.S. tangerine production, imports, and domestic supplies are shown in Table 2. U.S. net imports were less than 4 percent of the domestic supply in 1997–98. In addition, as Table 2 shows, the United States shifted from being a net exporter from 1994 through 1996 to being a net importer of tangerines beginning in 1996, reflecting increased demand for imported varieties. Annual exports from 1994 through 1998 were fairly constant at about 33,400 metric tons. Imports, however, increased sharply, from about 20,000 metric tons in 1994–95, to about 42,800 metric tons in 1997–98.

TABLE 2—U.S. FRESH TANGERINE PRODUCTION AND IMPORTATION

[In metric tons]

Year	U.S. production [1]	Net imports [2]	Domestic supply [3]
1994–95	190,046	−13,794	176,251
1995–96	220,985	−9,477	211,508
1996–97	255,020	1,742	256,762
1997–98	220,878	8,848	229,726

[1] Excludes processed fruit. Source: Production data from NASS, *Agricultural Statistics,* Tables 5–23 and 5–24.

[2] "Net imports" are imports minus exports. Calendar year data arranged to correspond to NASS cross-year production data. Net import data source: *World Trade Atlas,* Global Trade Information Services, Inc., based on data from U.S. Department of Commerce, Bureau of the Census.

[3] U.S. production (excluding processed fruit) plus net imports.

Comparing Unshu orange imports shown in Table 1 with U.S. tangerine supplies shown in Table 2, it is apparent that Unshu orange imports comprise a small portion of total supply. From 1994–95 to 1997–98, they averaged only 0.23 percent of U.S. tangerine supply, and when only the fruit imported from Japan is considered, 0.11 percent. The hypothesized import level, 790 metric tons a year, represents only 0.36 percent of the average annual tangerine domestic supply over this 4-year period. This very small percentage suggests that any effect of Unshu orange imports, as a substitute fruit, on the sales and prices of other tangerine varieties as a whole would not be significant.

One seedless variety that is similar to the Unshu orange is the Satsuma. In the United States, it is commercially grown only in California, where there were 1,368 acres of bearing and 753 acres of nonbearing (young) trees as of May 1999, according to the California Department of Food and Agriculture. Satsuma production statistics are not recorded at the national or State level. Nearly all commercial production takes place in Fresno, Kern, and Tulare Counties, CA. Of these, only Fresno County maintains information specific to Satsumas. In 1997–98, there were 2,332 metric tons of Satsuma produced on 470 acres in Fresno County. Based on those production levels, we estimate that the entire area of California planted with Satsuma annually produces 6,785 metric tons of fruit and could potentially produce 10,520 metric tons of fruit. The hypothesized quantity of Unshu orange imports, 790 metric tons, represents 11.6 and 7.5 percent, respectively, of the estimated California Satsuma production levels (i.e., the estimated annual production and estimated potential production levels).

Direct access to California markets will allow Unshu orange imports from Honshu Island to compete more directly for California's Satsuma consumers. However, prices of the two varieties are not competitive. Wholesale prices for Satsuma in 1997–98 were about 40 to 50 cents per pound. Wholesale prices for Unshu oranges for the past 6 to 7 years have been around $1.40 to $1.50 per pound ($45 to $48 per 32-pound container). One company has been the sole importer of Unshu oranges from Japan for more than 10 years. Information from the U.S. Department of Commerce, Bureau of the Census, shows that the average price of all tangerines imported by the United States from 1994 to 1998 was more in line with Satsuma prices, at about 47 cents per pound. A price difference of this magnitude implies distinct markets; it is highly unlikely that Satsuma customers will be willing to pay a threefold premium for a substitute variety. There may be latent demand for Unshu oranges in the United States, but the extent to which this demand draws away consumers of Satsuma and other domestic tangerine varieties is expected to be marginal. More likely, Unshu orange sales in citrus-producing States and elsewhere will be to an expanding base of niche customers willing to pay the premium price for Unshu oranges.

The effect on the demand for other *Citrus reticulata* varieties from increased levels of Unshu orange imports is expected to be negligible. Even when the analysis focuses more narrowly on a similar tangerine variety, the Satsuma, the higher prices paid for Unshu oranges strongly indicate a distinct market, with any effect on Satsuma sales likely to be insignificant.

An increase in the importation of Unshu oranges is expected, given the addition of Unshu oranges grown on Kyushu Island and the opportunity for Unshu oranges from Honshu Island to be marketed in U.S. citrus-producing States. The requirement that shipments from Honshu Island be fumigated using methyl bromide will not affect the volume of Unshu oranges exported, since all shipments from that island are already fumigated voluntarily. Whether the fruit continues to be wrapped after individual fruit wrappers are no longer required will probably be determined largely by customer preference.

As explained, increases in the quantity of Unshu oranges imported from Japan are not expected to have a significant economic effect on U.S. tangerine producers, whether the producer is a small or large entity.

Cost-Benefit Analysis and Analysis of Alternatives

Economic effects on U.S. producers and consumers resulting from this rule are expected to be insignificant. As described, projected Unshu orange imports represent about one-third of 1 percent of domestic tangerine supply. This small amount is unlikely to affect the demand for other tangerines, especially given that Unshu orange prices are triple those of other tangerines. U.S. retailers and consumers of Unshu oranges will benefit, particularly those in citrus-producing States that currently do not have direct access to them.

Alternatives to this rule would be to either maintain existing import regulations or propose restrictions different from those set forth here. The risk assessment supports neither alternative. Japanese sources and U.S. destinations can be expanded without jeopardizing the U.S. citrus industry. The economic effect will be positive, but very minor.

Under these circumstances, the Administrator of the Animal and Plant Health Inspection Service has determined that this action would not have a significant economic impact on a substantial number of small entities.

Executive Order 12988

This final rule allows Unshu oranges to be imported into the United States from Japan. State and local laws and regulations regarding Unshu oranges imported under this rule will be preempted while the fruit is in foreign commerce. Fresh Unshu oranges are generally imported for immediate distribution and sale to the consuming public, and remain in foreign commerce until sold to the ultimate consumer. The question of when foreign commerce ceases in other cases must be addressed on a case-by-case basis. No retroactive effect will be given to this rule, and this rule will not require administrative proceedings before parties may file suit in court challenging this rule.

National Environmental Policy Act

An environmental assessment and finding of no significant impact have been prepared for this final rule. The assessment provides a basis for the conclusion that the importation of Unshu oranges grown at approved locations in Japan and imported into certain areas of the United States under the conditions specified in this final rule will not present a risk of introducing or disseminating citrus canker, citrus fruit fly, and mealybugs and will not have a significant impact on the quality of the human environment. Based on the finding of no significant impact, the Administrator of the Animal and Plant Health Inspection Service has determined that an environmental impact statement need not be prepared.

The environmental assessment and finding of no significant impact were prepared in accordance with: (1) The National Environmental Policy Act of 1969 (NEPA), as amended (42 U.S.C. 4321 *et seq.*), (2) regulations of the Council on Environmental Quality for implementing the procedural provisions of NEPA (40 CFR parts 1500–1508), (3) USDA regulations implementing NEPA (7 CFR part 1b), and (4) APHIS' NEPA Implementing Procedures (7 CFR part 372).

Copies of the environmental assessment and finding of no significant impact are available for public inspection at USDA, room 1141, South Building, 14th Street and Independence Avenue SW., Washington, DC, between 8 a.m. and 4:30 p.m., Monday through Friday, except holidays. Persons wishing to inspect copies are requested to call ahead on (202) 690–2817 to facilitate entry into the reading room. In addition, copies may be obtained by writing to the individual listed under **FOR FURTHER INFORMATION CONTACT**.

Paperwork Reduction Act

In accordance with the Paperwork Reduction Act of 1995 (44 U.S.C. 3501 *et seq.*), the information collection or recordkeeping requirements included in this rule have been approved by the Office of Management and Budget (OMB) under OMB control number 0579–0173.

List of Subjects in 7 CFR Part 319

Bees, Coffee, Cotton, Fruits, Honey, Imports, Logs, Nursery Stock, Plant diseases and pests, Quarantine, Reporting and recordkeeping requirements, Rice, Vegetables.

Accordingly, we are amending 7 CFR part 319 as follows:

PART 319—FOREIGN QUARANTINE NOTICES

1. The authority citation for part 319 continues to read as follows:

Authority: 7 U.S.C. 166, 450, 7711–7714, 7718, 7731, 7732, and 7751–7754; 21 U.S.C. 136 and 136a; 7 CFR 2.22, 2.80, and 371.3.

2. Section 319.28 is amended as follows:

a. Paragraphs (b)(2), (b)(3), (b)(4), and (b)(6) are redesignated as paragraphs (b)(3), (b)(4), (b)(6), and (b)(7), respectively.

b. Paragraph (b) introductory text is revised, paragraph (b)(5) is added, and newly redesignated paragraphs (b)(6)(i) and (b)(7) are revised.

c. New paragraph (b)(2) is added.

§ 319.28 Notice of quarantine.

* * * * *

(b) The prohibition does not apply to Unshu oranges (*Citrus reticulata* Blanco var. *unshu,* Swingle [Citrus unshiu Marcovitch, Tanaka]), also known as Satsuma, grown in Japan or on Cheju Island, Republic of Korea, and imported under permit into any area of the United States except for those areas specified in paragraph (b)(7) of this section: *Provided*, that each of the following safeguards is fully carried out:

* * * * *

(2) In Unshu orange export areas and buffer zones on Kyushu Island, Japan, trapping for the citrus fruit fly (*Bactrocera tsuneonis*) must be conducted as prescribed by the Japanese Government's Ministry of Agriculture, Forestry and Fisheries and the U.S. Department of Agriculture. If fruit flies are detected, then shipping will be suspended from the export area until negative trapping shows the problem has been resolved.

* * * * *

(5) Each shipment of oranges grown on Honshu Island, Japan, must be fumigated with methyl bromide after harvest and prior to exportation to the United States. Fumigation must be at the rate of 3 lbs./1,000 cu. ft. for 2 hours at 59 °F or above at normal atmospheric pressure (chamber only) with a load factor of 32 percent or below.

(6) * * *

(i) The individual boxes in which the oranges are shipped must be stamped or printed with a statement specifying the States into which the Unshu oranges may be imported, and from which they are prohibited removal under a Federal plant quarantine.

* * * * *

(7) The Unshu oranges may be imported into the United States only through a port of entry listed in § 319.37–14, except as follows:

(i) Unshu oranges from Honshu Island, Japan, may not be imported into American Samoa, the Northern Mariana Islands, Puerto Rico, or the U.S. Virgin Islands.

(ii) Unshu oranges from Kyushu Island, Japan (Prefectures of Fukuoka, Kumanmoto, Nagasaki, and Saga only), or Cheju Island, Republic of Korea, may not be imported into American Samoa, Arizona, California, Florida, Hawaii, Louisiana, the Northern Mariana

Islands, Puerto Rico, Texas, or the U.S. Virgin Islands.

* * * * *

Done in Washington, DC, this 28th day of January 2002.

W. Ron DeHaven,

Acting Administrator, Animal and Plant Health Inspection Service.

[FR Doc. 02–2492 Filed 1–31–02; 8:45 am]

BILLING CODE 3410–34–P

DEPARTMENT OF AGRICULTURE

Animal and Plant Health Inspection Service

9 CFR Part 94

[Docket No. 01–122–1]

Change in Disease Status of Slovakia and Slovenia Because of BSE

AGENCY: Animal and Plant Health Inspection Service, USDA.

ACTION: Interim rule and request for comments.

SUMMARY: We are amending the regulations by adding Slovakia and Slovenia to the list of regions where bovine spongiform encephalopathy exists because the disease has been detected in native-born animals in those regions. Slovakia and Slovenia are currently listed among the regions that present an undue risk of introducing bovine spongiform encephalopathy into the United States. Therefore, the effect of this action is a continued restriction on the importation of ruminants that have been in Slovakia or Slovenia and meat, meat products, and certain other products of ruminants that have been in either of those countries. This action is necessary in order to update the disease status of Slovakia and Slovenia regarding bovine spongiform encephalopathy.

DATES: This interim rule is effective February 1, 2002. We invite you to comment on this docket. We will consider all comments we receive that are postmarked, delivered, or e-mailed by April 2, 2002.

ADDRESSES: You may submit comments by postal mail/commercial delivery or by e-mail. If you use postal mail/commercial delivery, please send four copies of your comment (an original and three copies) to: Docket No. 01–122–1, Regulatory Analysis and Development, PPD, APHIS, Station 3C71, 4700 River Road Unit 118, Riverdale, MD 20737–1238. Please state that your comment refers to Docket No. 01–122–1. If you use e-mail, address your comment to *regulations@aphis.usda.gov.* Your comment must be contained in the body of your message; do not send attached files. Please include your name and address in your message and ''Docket No. 01–122–1'' on the subject line.

You may read any comments that we receive on this docket in our reading room. The reading room is located in room 1141 of the USDA South Building, 14th Street and Independence Avenue SW., Washington, DC. Normal reading room hours are 8 a.m. to 4:30 p.m., Monday through Friday, except holidays. To be sure someone is there to help you, please call (202) 690–2817 before coming.

APHIS documents published in the **Federal Register**, and related information, including the names of organizations and individuals who have commented on APHIS dockets, are available on the Internet at http://www.aphis.usda.gov/ppd/rad/webrepor.html.

FOR FURTHER INFORMATION CONTACT: Dr. Gary Colgrove, Chief Staff Veterinarian, Sanitary Issues Management Staff, National Center for Import and Export, VS, APHIS, 4700 River Road Unit 38, Riverdale, MD 20737–1231; (301) 734–4356.

SUPPLEMENTARY INFORMATION:

Background

The regulations in 9 CFR parts 93, 94, 95, and 96 (referred to below as the regulations) govern the importation of certain animals, birds, poultry, meat, other animal products and byproducts, hay, and straw into the United States in order to prevent the introduction of various animal diseases, including bovine spongiform encephalopathy (BSE).

BSE is a neurological disease of cattle and is not known to exist in the United States. It appears that BSE is primarily spread through the use of ruminant feed containing protein and other products from ruminants infected with BSE. Therefore, BSE could become established in the United States if materials carrying the BSE agent, such as certain meat, animal products, and animal byproducts from ruminants, are imported into the United States and are fed to ruminants in the United States. BSE could also become established in the United States if ruminants with BSE are imported into the United States.

Sections 94.18, 95.4, and 96.2 of the regulations prohibit or restrict the importation of certain meat and other animal products and byproducts from ruminants that have been in regions in which BSE exists or in which there is an undue risk of introducing BSE into the United States.

Paragraph (a)(1) of § 94.18 lists the regions in which BSE exists. Paragraph (a)(2) lists the regions that present an undue risk of introducing BSE into the United States because their import requirements are less restrictive than those that would be acceptable for import into the United States and/or because the regions have inadequate surveillance. Paragraph (b) of § 94.18 prohibits the importation of fresh, frozen, and chilled meat, meat products, and most other edible products of ruminants that have been in any region listed in paragraphs (a)(1) or (a)(2). Paragraph (c) of § 94.18 restricts the importation of gelatin derived from ruminants that have been in any of these regions. Section 95.4 prohibits or restricts the importation of certain byproducts from ruminants that have been in any of those regions, and § 96.2 prohibits the importation of casings, except stomach casings, from ruminants that have been in any of these regions. Additionally, the regulations in 9 CFR part 93 pertaining to the importation of live animals provide that the Animal and Plant Health Inspection Service may deny the importation of ruminants from regions where a communicable disease such as BSE exists and from regions that present risks of introducing communicable diseases into the United States (see § 93.404(a)(3)).

Currently, Slovakia and Slovenia are among the regions listed in § 94.18(a)(2), which are regions that present an undue risk of introducing BSE into the United States. (Slovakia is currently listed in § 94.18(a)(2) as ''the Slovak Republic.'') However, on October 5, 2001, a case of BSE was confirmed in a native-born animal in Slovakia. A case of BSE was confirmed in a native-born animal in Slovenia on November 21, 2001. Therefore, in order to update the disease status of these regions regarding BSE, we are amending the regulations by removing Slovakia and Slovenia from the list in § 94.18(a)(2) of regions that present an undue risk of introducing BSE into the United States and adding Slovakia and Slovenia to the list in § 94.18(a)(1) of regions where BSE is known to exist. The effect of this action is a continued restriction on the importation of ruminants that have been in Slovakia or Slovenia and on the importation of meat, meat products, and certain other products and byproducts of ruminants that have been in either of those countries.

Miscellaneous

As noted above, the regulations in § 94.18(a)(2) have referred to Slovakia

by its conventional long form name, the Slovak Republic. For consistency with the manner in which we refer to other countries in the regulations, we use the conventional short form designation of ''Slovakia'' in this interim rule.

Emergency Action

This rulemaking is necessary on an emergency basis to update the disease status of Slovakia and Slovenia regarding BSE. Under these circumstances, the Administrator has determined that prior notice and opportunity for public comment are contrary to the public interest and that there is good cause under 5 U.S.C. 553 for making this rule effective less than 30 days after publication in the **Federal Register**.

We will consider comments we receive during the comment period for this interim rule (see **DATES** above). After the comment period closes, we will publish another document in the **Federal Register**. The document will include a discussion of any comments we receive and any amendments we are making to the rule as a result of the comments.

Executive Order 12866 and Regulatory Flexibility Act

This rule has been reviewed under Executive Order 12866. For this action, the Office of Management and Budget has waived its review process required by Executive Order 12866.

We are amending the regulations by adding Slovakia and Slovenia to the list of regions where BSE exists because the disease has been detected in native-born animals in those regions. Slovakia and Slovenia are currently listed among the regions that present an undue risk of introducing BSE into the United States. Regardless of which of the two lists a region is on, the same restrictions apply to the importation of ruminants and meat, meat products, and most other products and byproducts of ruminants that have been in the region. Therefore, this action, which is necessary in order to update the disease status of Slovakia and Slovenia regarding BSE, will not result in any change in the restrictions that apply to the importation of ruminants and meat, meat products, and certain other products and byproducts of ruminants that have been in Slovakia and Slovenia.

Under these circumstances, the Administrator of the Animal and Plant Health Inspection Service has determined that this action will not have a significant economic impact on a substantial number of small entities.

Executive Order 12988

This rule has been reviewed under Executive Order 12988, Civil Justice Reform. This rule: (1) Preempts all State and local laws and regulations that are inconsistent with this rule; (2) has no retroactive effect; and (3) does not require administrative proceedings before parties may file suit in court challenging this rule.

Paperwork Reduction Act

This interim rule contains no information collection or recordkeeping requirements under the Paperwork Reduction Act of 1995 (44 U.S.C. 3501 *et seq.*).

List of Subjects in 9 CFR Part 94

Animal diseases, Imports, Livestock, Meat and meat products, Milk, Poultry and poultry products, Reporting and recordkeeping requirements.

Accordingly, we are amending 9 CFR part 94 as follows:

PART 94—RINDERPEST, FOOT-AND-MOUTH DISEASE, FOWL PEST (FOWL PLAGUE), EXOTIC NEWCASTLE DISEASE, AFRICAN SWINE FEVER, HOG CHOLERA, AND BOVINE SPONGIFORM ENCEPHALOPATHY: PROHIBITED AND RESTRICTED IMPORTATIONS

1. The authority citation for part 94 continues to read as follows:

Authority: 7 U.S.C. 450, 7711, 7712, 7713, 7714, 7751, and 7754; 19 U.S.C. 1306; 21 U.S.C. 111, 114a, 134a, 134b, 134c, 134f, 136, and 136a; 31 U.S.C. 9701; 42 U.S.C. 4331 and 4332; 7 CFR 2.22, 2.80, and 371.4.

§ 94.18 [Amended]

2. Section 94.18 is amended as follows:

a. In paragraph (a)(1), by adding, in alphabetical order, the words ''Slovakia, Slovenia,''.

b. In paragraph (a)(2), by removing the words ''the Slovak Republic, Slovenia,''.

Done in Washington, DC, this 28th day of January 2002.

W. Ron DeHaven,

Acting Administrator, Animal and Plant Health Inspection Service.

[FR Doc. 02–2494 Filed 1–31–02; 8:45 am]

BILLING CODE 3410–34–U

DEPARTMENT OF TRANSPORTATION

Federal Aviation Administration

14 CFR Part 39

[Docket No. 2001–SW–14–AD; Amendment 39–12628; AD 2002–01–31]

RIN 2120–AA64

Airworthiness Directives; Model HH–1K, TH–1F, TH–1L, UH–1A, UH–1B, UH–1E, UH–1F, UH–1H, UH–1L, UH–1P, and Southwest Florida Aviation Model SW204, SW204HP, SW205, and SW205A–1 Helicopters, Manufactured by Bell Helicopter Textron, Inc. for the Armed Forces of the United States

AGENCY: Federal Aviation Administration, DOT.

ACTION: Final rule.

SUMMARY: This amendment supersedes an existing airworthiness directive (AD) that applies to Model HH–1K, TH–1F, TH–1L, UH–1A, UH–1B, UH–1E, UH–1F, UH–1H, UH–1L, UH–1P, and Southwest Florida Aviation Model SW204, SW204HP, SW205, and SW205A–1 helicopters, manufactured by Bell Helicopter Textron, Inc. (BHTI) for the Armed Forces of the United States. That AD currently requires establishing retirement lives for certain main rotor masts, creating a component history card or equivalent record, and identifying and replacing any unairworthy masts. That AD also contains certain requirements regarding the hub spring, conducting inspections based on the retirement index number (RIN), and sending information to the FAA. This AD contains the same requirements but would establish a retirement life for the main rotor trunnion (trunnion) based on monitoring the number of torque events and flight hours rather than flight hours only as currently required. This AD also adds a note clarifying that the mast serial number (S/N) is defined by 5 or fewer digits plus various prefixes. This amendment is prompted by the determination that monitoring the number of torque events and flight hours for the trunnion is more accurate than by monitoring flight hours only to establish a retirement life. The actions specified by this AD are intended to prevent failure of a mast or trunnion, separation of the main rotor system, and subsequent loss of control of the helicopter.

EFFECTIVE DATE: March 8, 2002.

FOR FURTHER INFORMATION CONTACT: Michael Kohner, Aviation Safety Engineer, FAA, Rotorcraft Directorate, Rotorcraft Certification Office, Fort

Worth, Texas 76193–0170, telephone (817) 222–5447, fax (817) 222–5783.

SUPPLEMENTARY INFORMATION: A proposal to amend 14 CFR part 39 by superseding AD 2000–22–51, Amendment 39–12034 (65 FR 77263, December 11, 2000), which applies to Model HH–1K, TH–1F, TH–1L, UH–1A, UH–1B, UH–1E, UH–1F, UH–1H, UH–1L, UH–1P, and Southwest Florida Aviation Model SW204, SW204HP, SW205, and SW205A–1 helicopters, manufactured by BHTI for the Armed Forces of the United States, was published in the **Federal Register** on September 21, 2001 (66 FR 48631). In addition to retaining several of the requirements of AD 2000–22–51, that action proposed establishing a retirement life for the trunnions based on monitoring the number of torque events and flight hours. Also proposed was adding a note clarifying that the mast S/N is defined by 5 or fewer digits plus various prefixes.

Interested persons have been afforded an opportunity to participate in the making of this amendment. Due consideration has been given to the comment received.

The one commenter states that when the details in paragraphs (a)(2)(i) and (b)(2)(i) of the AD are unavailable for a particular component but the total time-in-service (TIS) is known, he suggests that the worst possible combination for RIN and TIS count should be applied and recorded and the FAA should not require that the component be removed from service. The FAA does not concur. Even assuming the worst case scenario proposed by the commenter would not necessarily provide an appropriate safety margin. The helicopter model installation history and the hours TIS are required to ensure that the mast or trunnion has not been installed on any ineligible helicopter. Masts purchased from the U.S. military should have the part records with the helicopter model installation history and hours TIS.

The FAA has determined that air safety and the public interest require the adoption of the rule as proposed except that an editorial change has been made to the reporting requirements information, paragraph (9) of the AD. The FAA has determined that this change neither increases the economic burden on any operator nor increases the scope of the AD.

The FAA estimates that this AD will affect 75 helicopters of U.S. registry. The FAA also estimates that it will take 10 work hours to replace the trunnion, 2 work hours per helicopter to create a new component history card or equivalent record for the trunnions and that the average labor rate is $60 per work hour. Required trunnions will cost approximately $5,300 per helicopter. Based on these figures, the total cost impact of this AD on U.S. operators is estimated to be $451,500.

The regulations adopted herein will not have a substantial direct effect on the States, on the relationship between the national Government and the States, or on the distribution of power and responsibilities among the various levels of government. Therefore, it is determined that this final rule does not have federalism implications under Executive Order 13132.

For the reasons discussed above, I certify that this action (1) is not a ''significant regulatory action'' under Executive Order 12866; (2) is not a ''significant rule'' under DOT Regulatory Policies and Procedures (44 FR 11034, February 26, 1979); and (3) will not have a significant economic impact, positive or negative, on a substantial number of small entities under the criteria of the Regulatory Flexibility Act. A final evaluation has been prepared for this action and it is contained in the Rules Docket. A copy of it may be obtained from the Rules Docket at the FAA, Office of the Regional Counsel, Southwest Region, 2601 Meacham Blvd., Room 663, Fort Worth, Texas.

List of Subjects in 14 CFR Part 39

Air transportation, Aircraft, Aviation safety, Safety.

Adoption of the Amendment

Accordingly, pursuant to the authority delegated to me by the Administrator, the Federal Aviation Administration amends part 39 of the Federal Aviation Regulations (14 CFR part 39) as follows:

PART 39—AIRWORTHINESS DIRECTIVES

1. The authority citation for part 39 continues to read as follows:

Authority: 49 U.S.C. 106(g), 40113, 44701.

§ 39.13 [Amended]

2. Section 39.13 is amended by removing Amendment 39–12034 (65 FR 77263, December 11, 2000), and by adding a new airworthiness directive (AD), Amendment 39–12628, to read as follows:

2002–01–31 Arrow Falcon Exporters, Inc. (Previously Utah State University); Firefly Aviation Helicopter Services (Previously Erickson Air-crane Co.); Garlick Helicopters, Inc.; Hawkins and Powers Aviation, Inc.; International Helicopters, Inc.; Robinson Air Crane, Inc.; Smith Helicopters; Southern Helicopter, Inc.; Southwest Florida Aviation; Tamarack Helicopters, Inc. (Previously Ranger Helicopter Services, Inc.); U.S. Helicopter, Inc.; Western International Aviation, Inc., and Williams Helicopter Corporation (Previously Scott Paper Co.):

Amendment 39–12628. Docket No. 2001-SW–14-AD. Supersedes AD 2000–22–51, Amendment 39–12034, Docket No. 2000–SW–42–AD.

Applicability: Model HH–1K, TH–1F, TH–1L, UH–1A, UH–1B, UH–1E, UH–1F, UH–1H, UH–1L, and UH–1P; and Southwest Florida Aviation SW204, SW204HP, SW205, and SW205A–1 helicopters, manufactured by Bell Helicopter Textron Inc. (BHTI) for the Armed Forces of the United States, with main rotor mast (mast), part number (P/N) 204–011–450–007, –105, or –109, or main rotor trunnion (trunnion), P/N 204–011–105–001, installed, certificated in any category.

Note 1: This AD applies to each helicopter identified in the preceding applicability provision, regardless of whether it has been otherwise modified, altered, or repaired in the area subject to the requirements of this AD. For helicopters that have been modified, altered, or repaired so that the performance of the requirements of this AD is affected, the owner/operator must request approval for an alternative method of compliance in accordance with paragraph (c) of this AD. The request should include an assessment of the effect of the modification, alteration, or repair on the unsafe condition addressed by this AD; and if the unsafe condition has not been eliminated, the request should include specific proposed actions to address it.

Compliance: Required as indicated, unless accomplished previously.

Note 2: This AD requires using new factors to recalculate the FACTORED flight hours and the accumulated Retirement Index Number (RIN) for masts installed on certain helicopter models. This AD also expands the serial number (S/N) applicability for the one-time special inspection of the mast.

To prevent failure of a mast or trunnion, separation of the main rotor system, and subsequent loss of control of the helicopter, accomplish the following:

(a) For the mast, P/N 204–011–450–007, –105, or –109:

Note 3: The next higher assembly level for the affected P/N's are the 204–040–366 mast assemblies. Check the helicopter records for the appropriate P/N and assembly level.

(1) Within 10 hours time-in-service (TIS), create a component history card or equivalent record for the mast.

(2) Within 10 hours TIS, determine and record the accumulated RIN and revised hours TIS for the mast as follows:

(i) Review the helicopter maintenance records for the mast. If you do not know the helicopter model installation history or hours TIS of the mast, remove the mast from service, identify the mast as unairworthy, and replace it with an airworthy mast before further flight.

(ii) Calculate the accumulated RIN and the revised hours TIS for the mast in accordance with the instructions in Appendix 1 to this AD. For those hours TIS the mast has been installed on any other helicopter, calculate the RIN for that trunnion in accordance with the requirements for those helicopters.

(iii) Record the accumulated RIN and revised hours TIS for the mast on the component history card or equivalent record. Use the revised hours TIS as the new hours TIS for the mast.

(3) Before further flight after accomplishing the requirements of paragraph (a)(2) of this AD, remove from service any mast that has accumulated 265,000 or more RIN or 15,000 or more revised hours TIS and identify the mast as unairworthy. Replace the mast with an airworthy mast.

(4) Within 25 hours TIS, remove any hub spring installed on any affected helicopter.

Note 4: U.S. Army Modification Work Order (MWO) 55–1520–242–50–1 pertains to the removal of the hub spring and replacement of any required parts. U.S. Army Safety of Flight Message UH–1–00–10 dated July 19, 2000, also pertains to the subject of this AD.

(5) Determine whether a mast with a S/N less than and including 52720, 61433 through 61444, or 61457 through 61465 (regardless of prefix), has *ever* been installed on a helicopter while operated *with* a hub spring.

Note 5: The mast S/N consists of 5 or less numerical digits and may be preceded by one of the following prefixes: NFS, N9, H, AC9, CP, FA, H9, N19, RH9, or NC. There may be other prefixes in addition to those listed. The prefix and S/N may or may not be separated by a dash.

(i) If a mast has *never* been installed on a helicopter while operated with a hub spring, before reaching 100,000 RIN, inspect the upper and lower snap ring grooves in the damper clamp splined area for:

(A) A minimum radius of 0.020 inch around the entire circumference (see Figures 1 and 2), using a 100x or higher magnification. If any snap ring groove radius is less than 0.020 inch, identify the mast as unairworthy and replace it with an airworthy mast before exceeding 100,000 RIN.

(B) A burr (see Figures 1 through 3), using a 200x or higher magnification. If a burr is found in any snap ring groove/spline intersection, identify the mast as unairworthy and replace it with an airworthy mast before exceeding 170,000 RIN.

(ii) If a mast has ever been installed on a helicopter while operated *with* a hub spring or if you do not know whether a hub spring has ever been installed, before reaching 100,000 RIN or 400 *unfactored* flight hours, whichever occurs first, inspect the upper and lower snap ring grooves in the damper clamp splined area for:

(A) A minimum radius of 0.020 inch around the entire circumference (see Figures 1 and 2), using a 100x or higher magnification. If any snap ring groove radius is less than 0.020 inch, identify the mast as unairworthy and replace it with an airworthy mast before further flight.

(B) A burr (see Figures 1 through 3), using a 200x or higher magnification. If a burr is found in any snap ring groove/spline intersection, identify the mast as unairworthy and replace it with an airworthy mast before further flight.

(6) After accomplishing the requirements of paragraph (a)(2) of this AD, continue to calculate the accumulated RIN for the mast by multiplying all takeoff and external load lifts by the RIN factors defined in columns (D) and (G) of Table 1 of Appendix 1 of this AD.

(7) After accomplishing the requirements of paragraph (a)(2) of this AD, continue to count the hours TIS for the mast. Any hours TIS for the mast while installed on a helicopter operated *with* a hub spring or those hours during which you do not know whether a hub spring was installed must be factored in accordance with the instructions in Appendix 1 of this AD.

(8) This AD establishes a retirement life of 265,000 accumulated RIN or 15,000 hours TIS, whichever occurs first, for mast, P/N 204–011–450–007, –105, and –109.

(9) Within 10 days after completing the inspections required by paragraph (a)(5) of this AD, send the information contained on the AD compliance inspection report sample format contained in Appendix 2 to the Manager, Rotorcraft Certification Office, Federal Aviation Administration, Fort Worth, Texas, 76193–0170, USA. Information collection requirements contained in this AD have been approved by the Office of Management and Budget (OMB) under the provisions of the Paperwork Reduction Act of 1980 (44 U.S.C. 3501 *et seq.*) and have been assigned OMB Control Number 2120–0056.

BILLING CODE 4910–13–V

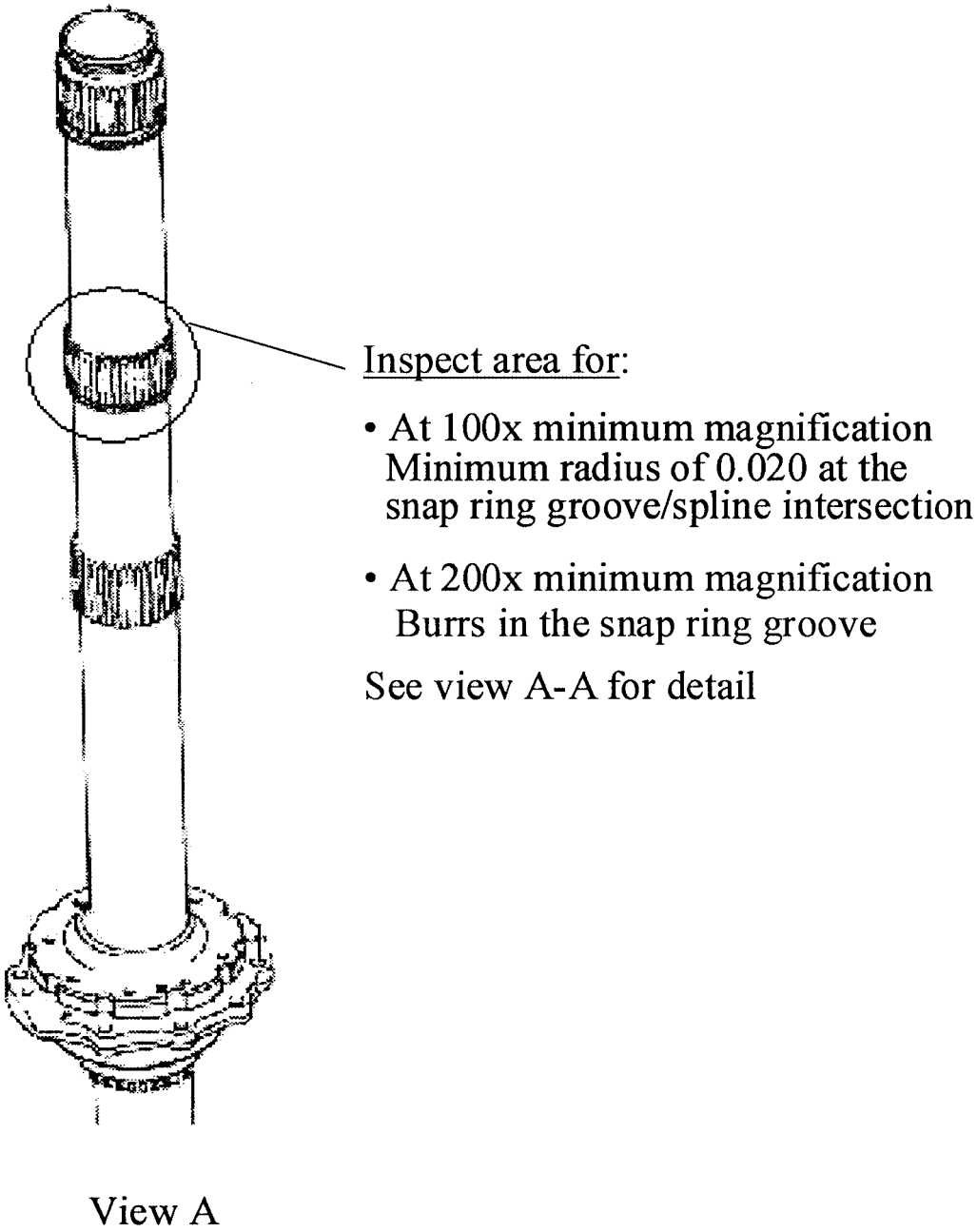
Inspect area for:
• At 100x minimum magnification
Minimum radius of 0.020 at the
snap ring groove/spline intersection
• At 200x minimum magnification
Burrs in the snap ring groove
See view A-A for detail
View A

Figure 1

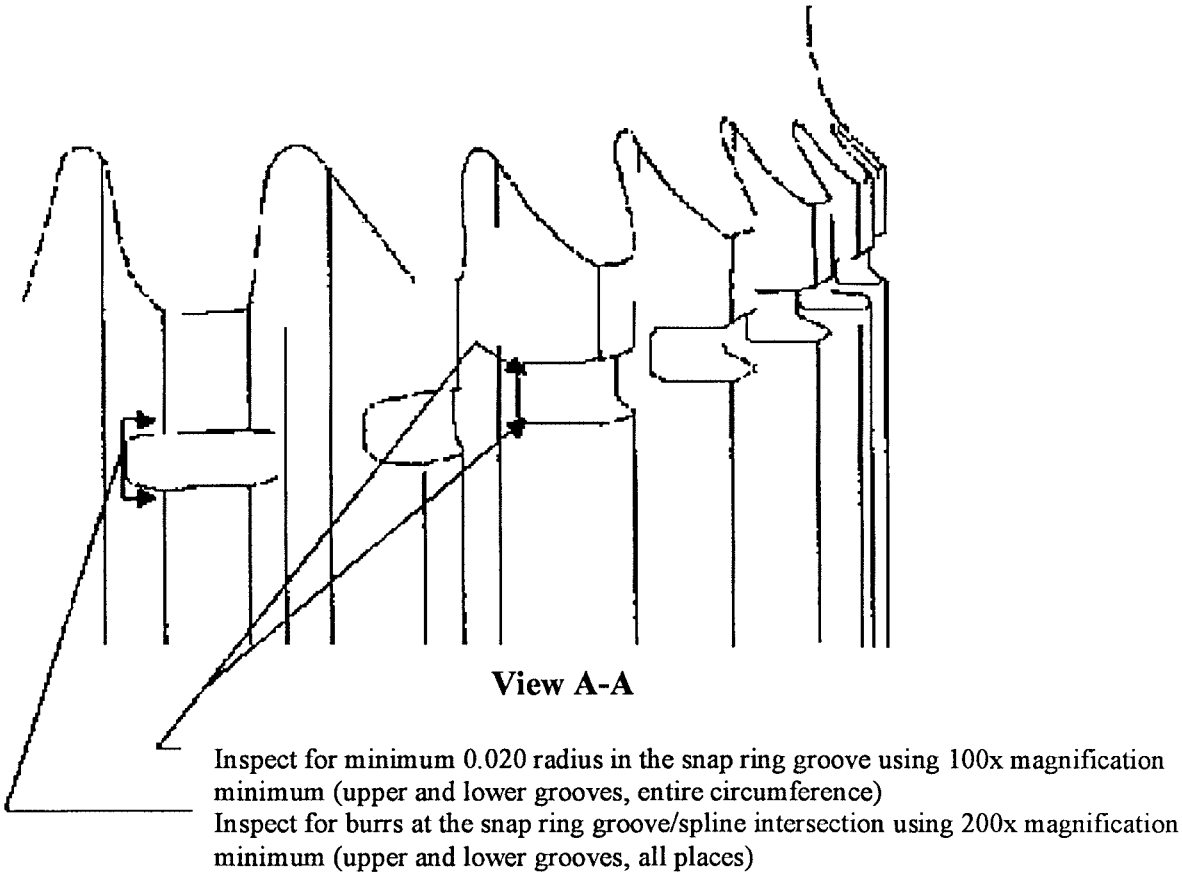

Figure 2
Snap Ring Groove/Spline Intersection

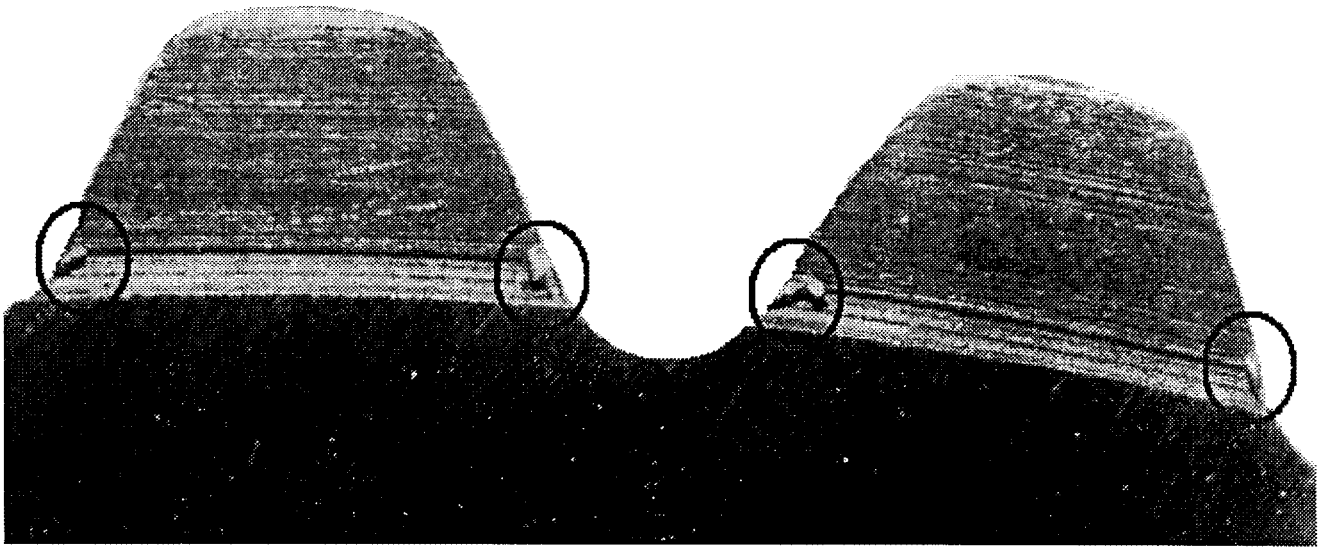

Cutaway View Looking Down from Inside Snap Ring Groove
Typical Burrs at Snap Ring Groove/Spline Intersection
Burrs are to be Inspected at 200x Minimum Magnification

Figure 3
Typical Burr at Snap Ring Groove

(b) For the trunnion, P/N 204–011–105–001:

(1) Within 10 hours TIS, create a component history card or equivalent record for the trunnion.

(2) Within 10 hours TIS, determine and record the accumulated RIN and revised hours TIS for the trunnion as follows:

(i) Review the helicopter maintenance records for the trunnion. If the helicopter model installation history or hours TIS of the trunnion are unknown, remove the trunnion from service, identify the trunnion as unairworthy, and replace it with an airworthy trunnion before further flight.

(ii) Calculate the accumulated RIN and the revised hours TIS in accordance with the instructions in Appendix 3 to this AD. For those hours TIS the trunnion has been installed on any other helicopter, calculate the RIN for that trunnion in accordance with the requirements for those helicopters.

(iii) Record the accumulated RIN and revised hours TIS for the trunnion on the component history card or equivalent record. Use the revised hours TIS as the new hours TIS for the trunnion.

(3) Before further flight after accomplishing the requirements of paragraph (b)(2) of this AD, remove from service any trunnion that has accumulated 300,000 or more RIN or 15,000 or more revised hours TIS and identify the trunnion as unairworthy. Replace the trunnion with an airworthy trunnion.

(4) After accomplishing the requirements of paragraph (b)(2) of this AD, continue to calculate the accumulated RIN for the trunnion by multiplying all takeoff and external load lifts by the RIN factors defined in columns (D) and (G) of Table 1 of Appendix 3 to this AD.

(5) After accomplishing the requirements of paragraph (b)(2) of this AD, continue to count the hours TIS for the trunnion.

(6) This AD establishes a retirement life of 300,000 accumulated RIN or 15,000 hours TIS, whichever occurs first, for the trunnion, P/N 204–011–105–001.

(c) An alternative method of compliance or adjustment of the compliance time that provides an acceptable level of safety may be used if approved by the Manager, Rotorcraft Certification Office, FAA. Operators shall submit their requests through an FAA Principal Maintenance Inspector, who may concur or comment and then send it to the Manager, Rotorcraft Certification Office.

Note 6: Information concerning the existence of approved alternative methods of compliance with this AD, if any, may be obtained from the Manager, Rotorcraft Certification Office.

(d) Special flight permits may be issued in accordance with 14 CFR 21.197 and 21.199 to operate the helicopter to a location where the requirements of this AD can be accomplished.

Appendix 1—Instructions for Calculating the RIN and Revised Hours TIS

Definitions for the RIN:

The overall *fatigue life* of a main rotor mast is a function of the number of cycles of torque, lift, and bending loads applied to it during the various modes of operation. The mast experiences both high cycle fatigue and low cycle fatigue during operation.

The *high cycle fatigue life* of the mast is a function of high frequency but relatively low level cyclic loads, which are primarily

induced by rotor rpm. The high cycle fatigue life limit for the mast is defined in terms of hours TIS because rotor rpm is basically a constant value.

The *low cycle fatigue life* of the mast is a function of the number of less frequent but relatively high level cyclic loads experienced primarily during takeoffs and external load lifts. The low cycle fatigue life limit for the mast is expressed in terms of the accumulated RIN.

A *load cycle* is a power cycle caused by a repeating or fluctuating load that alternates from a starting power value, goes to a higher power value, and returns to the starting power value.

The *accumulated RIN* is defined as the total number of load cycles multiplied by a **RIN factor** to account for the difference in torque levels applied to the same mast (since manufactured) when installed in different helicopter models. The level of torque applied to the mast is directly proportional to the transmission output horsepower.

The *unfactored hours TIS* is the time from the moment a helicopter leaves the surface of the earth until it touches it at the next point of landing with no factors applied.

The *FACTORED flight hours* is the *unfactored* hours TIS multiplied by a frequency of event hour factor based on the torque (horsepower) of the helicopter model in which it was installed and the usage of the helicopter.

The *revised hours TIS* is the new hours TIS for the mast as determined by following the instructions in this appendix.

An *external load lift* is defined as a lift where the load is carried, or extends, outside of the aircraft fuselage.

Calculation of RIN and Revised Hours TIS:

There are two methods for calculating the accumulated RIN and the revised hours TIS, depending on the available service history information for the mast. In some cases, one method will be used for a portion of the mast service history, and the other method will be used for another portion of the mast service history. Both methods require knowledge of all the helicopter models in which the mast was installed.

Calculation of RIN and Revised Hours TIS when the Exact Number of Takeoffs and External Load Lifts is Known (Reference Tables 1 and 3):

Table 1 of Appendix 1 is the worksheet for calculating the accumulated mast RIN when the exact number of takeoffs and external load lifts is *known.* Table 3 of Appendix 1 is the worksheet that has the frequency of event hour factors to calculate the FACTORED flight hours for the *unfactored* hours TIS for the mast while installed on a helicopter operated *with* a hub spring or the hub spring installation history *is unknown.*

The RIN factor for each external load lift is twice that specified for each takeoff because two torque events are experienced during a typical external load lift.

Using Table 1, calculate accumulated RIN as follows:

1. Enter the total number of takeoffs for the particular mast model/helicopter model combination in column (C).

2. Multiply the value entered in column (C) by the RIN factor listed in column (D), and enter the result in column (E). This is the total accumulated RIN due to takeoffs.

3. Enter the total number of external load lifts for the particular mast model/helicopter model combination in column (F).

4. Multiply the value entered in column (F) by the RIN factor listed in column (G), and enter the result in column (H). This is the accumulated RIN due to external load lifts.

5. Add the values from column (E) and column (H) and enter the result in column (I). This is the total accumulated RIN to-date for the mast for the particular mast model/helicopter model combination.

6. Add the accumulated RIN subtotals for the various mast model/helicopter combinations in column (I) and enter the result in the space provided. This is the total accumulated RIN for the mast.

Using Table 3, calculate the revised hours TIS as follows:

7. Determine the *unfactored* hours TIS for the mast while installed on a helicopter operated *with* a hub spring or the number of hours TIS for which you do not know whether a hub spring was installed for each of the particular mast model/helicopter model combinations.

8. Determine the frequency of events per hour for each of the particular mast model/helicopter model combinations dividing the combined number of takeoffs and external load lifts by the corresponding *unfactored* hours TIS.

9. Multiply the value for *unfactored* hours TIS for each of the particular mast model/helicopter model combinations by the appropriate value in column (E) of Table 3 for the frequency of event hour factor. These are the total FACTORED flight hours for the particular mast model/helicopter model combinations.

10. Add the FACTORED flight hour subtotals for each of the particular mast model/helicopter model combinations. This is the total FACTORED flight hours for the mast while installed on a helicopter operated *with* a hub spring or when you do not know whether a hub spring was installed.

11. Determine the *unfactored* hours TIS for the mast while installed on a helicopter operated *without* a hub spring.

12. Add to the total FACTORED flight hours for the mast while installed on a helicopter operated *with* a hub spring or those hours during which you do not know whether a hub spring was installed to the *unfactored* hours TIS as determined in step 11. This is the total revised hours TIS for the mast when the exact number of takeoffs and external load lifts is known.

Calculation of RIN and Revised Hours TIS when Exact Number of Takeoffs and External Load Lifts is Unknown (Reference Tables 2, 3, and 4):

Tables 2, 3, and 4 of Appendix 1 are the worksheets for calculating the FACTORED flight hours and accumulated mast RIN when the exact number of takeoffs and external load lifts *is unknown.*

Using Tables 2, 3, and 4, calculate the accumulated mast RIN and revised hours TIS as follows:

1. Enter the *unfactored* hours TIS for the particular mast model/helicopter model combination in column (C) of Tables 2 and 3.

2. Using service history for the mast, select the appropriate frequency of event hour factor from column (E) of Tables 2 and 3 based on the total combined number of takeoffs and external load lifts per hour shown in column (D).

3. Multiply the value for *unfactored* hours TIS entered in column (C) by the appropriate value in column (E) for the frequency of event hour factor as determined in step 2. Enter the result in column (F) of Tables 2 and 3. This is the total FACTORED flight hours for the particular mast model/helicopter model combination.

4. Enter the value for FACTORED flight hours from column (F) of Tables 2 and 3 into column (C) of Table 4.

5. Using Table 4, multiply the value for FACTORED flight hours in column (C) by the appropriate RIN conversion factor listed in column (D), by the appropriate RIN adjustment factor in column (E), and enter the result in column (F). This is the accumulated RIN to-date for the particular mast model/helicopter model combination.

6. Add the accumulated RIN subtotals for the various mast model/helicopter model combinations in column (F) of Table 4 and enter the result in the space provided. This is the total accumulated RIN for the mast.

7. Add the factored flight hour subtotals for the various mast model/helicopter model combinations as determined in steps 1 through 4. This is the total revised hours TIS for the mast when the exact number of takeoffs and external load lifts *is unknown.*

Sample Mast Calculation

Given the following known service history for the mast:

Mast, P/N 204–011–450–007, was first purchased as a United States military surplus part with valid historical records. The mast had accumulated 550 hours military TIS on an Army UH–1H with a hub spring installed.

The mast was first installed on a restricted category UH–1H former military helicopter for 250 hours TIS. The helicopter had a rating of 1100 takeoff horsepower (T.O. hp) at sea level standard day conditions (SLS), and the operation of the helicopter *without* a hub spring cannot be determined. The helicopter was used for fire fighting operations and the exact number of takeoffs and external load lifts is unknown. It is known, however, that the helicopter averaged less than 15 combined takeoffs and external load lifts per hour.

The mast was then removed and subsequently installed on a restricted category UH–1E former military helicopter (1100 T.O. hp SLS rating) *without* a hub spring for 450 hours TIS. It is known that the helicopter was used primarily for aerial surveying for the first 200 hours of operation. The exact number of takeoffs and external load lifts is unknown, but it is known that the helicopter averaged less than 16 takeoffs per hour, with no external load lifts. It was subsequently used for repeated heavy lift operation for the next 250 hours of operation and averaged between 25 and 31 combined

takeoffs and external load lifts per hour during this period of time.

The mast was then removed and installed on another restricted category UH–1H former military helicopter (1100 T.O. hp SLS rating) for a total of 150 hours TIS with accurate records indicating that it experienced 100 takeoffs and 2,450 external load lifts. A hub spring was installed on the helicopter for the first 50 hours of operation with a calculated average of 19 combined takeoffs and external load lifts per hour (as determined from aircraft records for the first 50 hours of operation). The hub spring was subsequently removed for the remaining 100 hours TIS.

Calculate the FACTORED flight hours and total accumulated RIN for the mast as follows:

FACTORED Flight Hours and Accumulated RIN while installed in U.S. military Model UH–1H:

Calculate FACTORED flight hours from Table 3 as follows:
FACTORED Flight Hours
= (*unfactored* hours TIS) × (frequency of event hour factor)
= (column C) × (column E)
= (550) × (10)
= 5,500 hours

Then using Table 4, calculate the accumulated RIN as follows:
Accumulated RIN
= (FACTORED flight hours) × (RIN conversion factor) × (RIN adjustment factor)
= (column C) × (column D) × (column E)
= (5,500) × (20) × (1)
= 110,000 RIN

FACTORED Flight Hours and Accumulated RIN while installed in restricted category Model UH–1H:

Calculate FACTORED flight hours from Table 3 as follows:
FACTORED Flight Hours
= (*unfactored* hours TIS) × (frequency of event hour factor)
= (column C) × (column E)
= (250) × (14)
= 3,500 hours

Then using Table 4, calculate the accumulated RIN as follows:
Accumulated RIN
= (FACTORED flight hours) × (RIN conversion factor) × (RIN adjustment factor)
= (column C) × (column D) × (column E)
= (3,500) × (20) × (1)
= 70,000 RIN

FACTORED Flight Hours and Accumulated RIN while installed in restricted category Model UH–1E:

Calculate FACTORED flight hours from Table 2 as follows:
FACTORED Flight Hours (for first 200 hrs.)
= (*unfactored* hours TIS) × (frequency of event hour factor)
= (column C) × (column E)
= (200) × (5)
= 1,000 hours
FACTORED Flight Hours (for next 250 hrs.)
= (*unfactored* hours TIS) × (frequency of event hour factor)
= (column C) × (column E)
= (250) × (10)
= 2,500 hours

Then using Table 4, calculate the accumulated RIN as follows:
Accumulated RIN
= (FACTORED flight hours) × (RIN conversion factor) × (RIN adjustment factor)
= (column C) × (column D) × (column E)
= (1,000) × (20) × (1) + (2,500) × (20) × (1)
= 20,000 + 50,000
= 70,000 RIN

FACTORED Flight Hours and Accumulated RIN while installed in another restricted category Model UH–1H:

Calculate the accumulated RIN from Table 1 and the given number of takeoffs and external load lifts as follows:
Accumulated RIN
= (number of takeoffs × RIN factor per takeoff) + (number of external load lifts × RIN factor per external load lifts.
= (column C) × (column D) + (column F) × (column G)
= (100) × (3) + (2,450) × (6)
= 15,000 RIN

Calculate the FACTORED flight hours for the mast while installed on a helicopter operated *with* a hub spring or when you do not know whether a hub spring was installed using the frequency of event hour factors from Table 3 as follows:
FACTORED Flight Hours (w/ hub spring)
= (*unfactored* hours TIS) × (frequency of event hour factor)
= (column C) × (column E)
= (50) × (16)
= 800 hours
Unfactored Hours TIS (w/o hub spring)
= (unfactored hours TIS)
= 100 hours

Note that the FACTORED flight hours are not used in the accumulated RIN calculations when the number of takeoffs and external load lifts *is known.*

Calculate the Total Accumulated RIN and Revised Hours TIS as follows:

The total accumulated RIN to-date for the mast is the sum of the subtotals from Tables 1 and 4.
Total Accumulated RIN
= 110,000 + 70,000 + 70,000 + 15,000
= 265,000

The total FACTORED flight hours for the mast is the sum of the subtotals from Tables 2 and 3 and the total FACTORED flight hours as determined in the preceding step 12 when the exact number of takeoff and external load lifts *is known.*
Total FACTORED Flight Hours
= 5,500 + 3,500 + 1,000 + 2,500 + 800
= 13,300 hours

The revised hours TIS to-date for the mast is the sum of the total FACTORED flight hours and the additional *unfactored* hours TIS for the mast while installed on a helicopter operated without a hub spring and the exact number of takeoffs and external load lifts *is known.*
Revised Hours TIS
= 5,500 + 3,500 + 1,000 + 2,500 + 800 + 100
= 13,300 + 100
= 13,400 hours

Both the total accumulated RIN and the revised hours TIS need to be determined and checked for exceeding the allowable life limits for the mast. Also, note that the recalculated total accumulated RIN for this sample mast would be 265,000 RIN. Therefore, this mast would be removed from service.

The values for the sample problem are shown in Tables 1–4 for illustration purposes only. The FACTORED flight hours TIS shown in the brackets in Table 3 are calculated for the mast while installed on a helicopter operated with a hub spring or when you do not know whether a hub spring was installed and the exact number of takeoffs and external load lifts *is known*. These FACTORED flight hours are not used in the accumulated RIN calculations.

BILLING CODE 4910–13–U

Mast RIN Calculation Based on Takeoffs and External Load Lifts

Mast A/C Model Installation	Mast P/N 204-011-450	Number Of Takeoffs	RIN Factor Per Takeoff	Total Takeoff RIN	Number of External Load Lifts	RIN Factor Per External Load Lift	Total External Load Lift RIN	Accumulated RIN
(A)	(B)	(C)	(D)	(E) =(C) x (D)	(F)	(G)	(H) =(F) x (G)	(I) =(E) + (H)
Restricted Category TIS (≤700 T.O. hp SLS)	204-011-450-007		0.25			0.5		
	204-011-450-105		0.25			0.5		
	204-011-450-109		0.25			0.5		
Restricted Category TIS (700<T.O. hp SLS ≤1000)	204-011-450-007		1.5			3		
	204-011-450-105		1.5			3		
	204-011-450-109		1.5			3		
Restricted Category TIS (1000<T.O. hp SLS ≤1100)	204-011-450-007	*100*	3	*300*	*2,450*	6	*14,700*	*15,000*
	204-011-450-105		3			6		
	204-011-450-109		3			6		
Restricted Category TIS (1100<T.O. hp SLS ≤1290)	204-011-450-007		6			12		
	204-011-450-105		6			12		
	204-011-450-109		6			12		
Restricted Category TIS (>1290 T.O. hp SLS)	204-011-450-007		Contact FAA*			Contact FAA*		Contact FAA*
	204-011-450-105							
	204-011-450-109							
Total RIN=								*15,000*

*Contact FAA at (817) 222-5447

Appendix 1 - Table 1

Calculation of Mast FACTORED Flight Hours (Without a Hub Spring Installed)

Mast A/C Model Installation	Mast P/N 204-011-450 (without a hub spring installed)	*Unfactored* Hours TIS on Model	Frequency Of Events Per Hour	Frequency of Event Hour Factor	FACTORED Flight Hours On Model
(A)	(B)	(C)	(D)	(E)	(F) = (C) x (E)
Restricted Category TIS (≤700 T.O. hp SLS)	204-011-450-007, –105, or –109		1.0-37.00	1.00	
			37.01-46.00	1.25	
			46.01-55.00	1.50	
			55.01-63.00	1.75	
			Greater than 63.00	Contact FAA*	
			Unknown	1.75	
Restricted Category TIS (700<T.O. hp SLS ≤1000)	204-011-450-007, –105, or –109		1.0-7.00	1.00	
			7.01-13.00	2.00	
			13.01-18.00	3.00	
			18.01-30.00	5.00	
			30.01-41.00	7.00	
			41.01-52.00	9.00	
			52.01-63.00	11.00	
			Greater than 63.00	Contact FAA*	
			Unknown	11.00	
Restricted Category TIS (1000<T.O. hp SLS ≤1100)	204-011-450-007, –105, or –109		1.0-5.00	1.00	
			5.01-7.00	2.00	
			7.01-10.00	3.00	
		200	10.01-16.00	5.00	***1,000***
			16.01-24.00	7.50	
		250	24.01-31.00	10.00	***2,500***
			31.01-46.00	15.00	
			46.01-61.00	20.00	
			Greater than 61.00	Contact FAA*	
			Unknown	20.00	
Restricted Category TIS (1100<T.O. hp SLS ≤1290)	204-011-450-007, –105, or –109		1.0-5.00	2.10	
			5.01-7.00	4.00	
			7.01-10.00	6.00	
			10.01-15.00	9.00	
			15.01-19.00	12.00	
			19.01-25.00	16.00	
			25.01-31.00	20.00	
			31.01-46.00	30.00	
			46.01-60.00	40.00	
			Greater than 60.00	Contact FAA*	
			Unknown	40.00	
Military TIS	204-011-450-007, –105,				
(≤700 T.O. hp SLS)	or –109		All	1.00	
(≤1000 T.O. hp SLS)			All	2.00	
(≤1100 T.O. hp SLS)			All	3.50	
(≤1290 T.O. hp SLS)			All	7.00	
(>1290 T.O. hp SLS)			All	Contact FAA*	

*Contact FAA at (817) 222–5447

Appendix 1 - Table 2

Calculation of Mast FACTORED Flight Hours (With a Hub Spring Installed)

Mast A/C Model Installation	Mast P/N 204-011-450 (*with* a hub spring or for which you do not know whether a hub spring was installed)	*Unfactored* Hours TIS on Model	Frequency Of Events Per Hour	Frequency of Event Hour Factor	FACTORED Flight Hours On Model
(A)	(B)	(C)	(D)	(E)	(F) = (C) x (E)
Restricted Category TIS (≤700 T.O. hp SLS)	204-011-450-007, –105, or –109		1.0-6.00	10.00	
			6.01-12.00	10.25	
			12.01-21.00	10.50	
			21.01-39.00	11.00	
			39.01-63.00	11.75	
			Greater than 63.00	Contact FAA*	
			Unknown	11.75	
Restricted Category TIS (700<T.O. hp SLS ≤1000)	204-011-450-007, –105, or –109		1.0-6.00	10.00	
			6.01-15.00	12.00	
			15.01-26.00	14.00	
			26.01-37.00	16.00	
			37.01-49.00	18.00	
			49.01-63.00	21.00	
			Greater than 63.00	Contact FAA*	
			Unknown	21.00	
Restricted Category TIS (1000<T.O. hp SLS ≤1100)	204-011-450-007, –105, or –109		1.0-6.00	10.00	
			6.01-9.00	12.00	
		250	9.01-15.00	14.00	***3,500***
		<50>	15.01-21.00	16.00	***<800>***
			21.01-33.00	20.00	
			33.01-45.00	24.00	
			45.01-61.00	30.00	
			Greater than 61.00	Contact FAA*	
			Unknown	30.00	
Restricted Category TIS (1100<T.O. hp SLS ≤1290)	204-011-450-007, –105, or –109		1.0-6.00	10.00	
			6.01-11.00	15.00	
			11.01-18.00	20.00	
			18.01-26.00	25.00	
			26.01-33.00	30.00	
			33.01-40.00	35.00	
			40.01-48.00	40.00	
			48.01-60.00	50.00	
			Greater than 60.00	Contact FAA*	
			Unknown	50.00	
Military TIS					
(≤1290 hp T.O. SLS)	204-011-450-007, –105,	***550***	All	10.00	***5,500***
(>1290 hp T.O. SLS)	or –109		All	Contact FAA*	

*Contact FAA at (817) 222–5447

Appendix 1 - Table 3

Mast RIN Calculation Based on Hours TIS

Mast A/C Model Installation	Mast P/N 204-011-450	FACTORED Flight Hours On Model	RIN Conversion Factor	RIN Adjustment Per AD 2000-15-52	Accumulated RIN
(A)	(B)	(C) (From Table 2 of Appendix I)	(D)	(E)	(F) =(C) x (D) x (E)
Restricted Category or Military TIS with (≤1290 T.O. hp SLS)	204-011-450-007	*12,500*	20	1	*250,000*
	204-011-450-105		20	1	
	204-011-450-109		20	1	
Restricted Category or Military TIS with (>1290 T.O. hp SLS)	204-011-450-007	Contact FAA*	Contact FAA*	Contact FAA*	Contact FAA*
	204-011-450-105				
	204-011-450-109				
Total RIN=					*250,000*

Contact FAA at (817) 222–5447

Appendix 1 - Table 4

Subtotals for the FACTORED Flight Hours and Accumulated RIN
For Table 4 of the Sample Mast Calculation:

FACTORED Flight Hours				Accumulated RIN
5,500	X	20	=	110,000
3,500	X	20	=	70,000
3,500	X	20	=	70,000
12,500				250,000

BILLING CODE 4910–13–C

Appendix 2—AD Compliance Inspection Report (Sample Format) P/N 204–011–450–007/–105/–109 Main Rotor Mast

Provide the following information and mail or fax it to: Manager, Rotorcraft Certification Office, Federal Aviation Administration, Fort Worth, Texas, 76193–0170, USA, Fax: 817–222–5783

Aircraft Registration No:
Helicopter Model:
Helicopter S/N:
Mast P/N:
Mast S/N:
Mast RIN:
Mast Total TIS:
Inspection Results

Were any radii during inspection of this mast determined to be less than 0.020 inch? If yes, what was the dimension measured?
Was a burr found in the inspected snap ring grooves?
Were cracks noted during the inspection?
Who performed this inspection?
Provide any other comments?

Appendix 3—Instructions for Calculating Trunnion RIN and Revised Hours TIS

Definitions for the RIN:

The overall *fatigue life* of a main rotor trunnion is a function of the number of cycles of torque, lift, and bending loads applied to it during the various modes of operation. The trunnion experiences both high cycle fatigue and low cycle fatigue during operation.

The *high cycle fatigue life* of the trunnion is a function of high frequency but relatively low level cyclic loads, which are primarily induced by rotor rpm. The high cycle fatigue life limit for the trunnion is defined in terms of hours TIS because rotor rpm is basically a constant value.

The *low cycle fatigue life* of the trunnion is a function of the number of less frequent but relatively high level cyclic loads experienced primarily during takeoffs and external load lifts. The low cycle fatigue life limit for the trunnion is expressed in terms of the accumulated RIN.

A *load cycle* is a power cycle caused by a repeating or fluctuating load that alternates from a starting power value, goes to a higher power value, and returns to the starting power value.

The *accumulated RIN* is defined as the total number of load cycles multiplied by a RIN factor to account for the difference in torque levels applied to the same trunnion (since manufactured) when installed in different helicopter models. The level of torque applied to the trunnion is directly proportional to the transmission output horsepower.

The *unfactored hours TIS* is the time from the moment a helicopter leaves the surface of the earth until it touches it at the next point of landing with no factors applied.

The *FACTORED flight hours* is the *unfactored* hours TIS multiplied by a frequency of event hour factor based on the torque (horsepower) of the helicopter model in which it was installed and the usage of the helicopter.

The *revised hours TIS* is the new hours TIS for the trunnion as determined by following the instructions in this appendix.

An *external load lift* is defined as a lift where the load is carried, or extends, outside of the aircraft fuselage.

Calculation of RIN and Revised Hours TIS:

There are two methods for calculating the accumulated RIN and the revised hours TIS, depending on the available service history information for the trunnion. In some cases, one method will be used for a portion of the trunnion service history, and the other method will be used for another portion of the trunnion service history. Both methods require knowledge of all the helicopter models in which the trunnion was installed.

Calculation of RIN and Revised Hours TIS when the Exact Number of Takeoffs and External Load Lifts is Known (Reference Table 1):

Table 1 of Appendix 3 is the worksheet for calculating the accumulated trunnion RIN when the exact number of takeoffs and external load lifts is *known.*

The RIN factor for each external load lift is twice that specified for each takeoff because two torque events are experienced during a typical external load lift.

Using Table 1, calculate the accumulated RIN as follows:

1. Enter the total number of takeoffs for the particular trunnion model/helicopter model combination in column (C).
2. Multiply the value entered in column (C) by the RIN factor listed in column (D), and enter the result in column (E). This is the total accumulated RIN due to takeoffs.
3. Enter the total number of external load lifts for the particular trunnion model/helicopter model combination in column (F).
4. Multiply the value entered in column (F) by the RIN factor listed in column (G), and enter the result in column (H). This is the accumulated RIN due to external load lifts.
5. Add the values from column (E) and column (H) and enter the result in column (I). This is the total accumulated RIN to-date for the trunnion for the particular trunnion model/helicopter model combination.
6. Add the accumulated RIN subtotals for the various trunnion model/helicopter combinations in column (I) and enter the result in the space provided. This is the total accumulated RIN for the trunnion.

Calculation of RIN and Revised Hours TIS when Exact Number of Takeoffs and External Load Lifts is Unknown (Reference Tables 2 and 3):

Tables 2 and 3 of Appendix 3 are the worksheets for calculating the FACTORED flight hours and accumulated trunnion RIN when the exact number of takeoffs and external load lifts *is unknown.*

Using Tables 2 and 3, calculate the accumulated trunnion RIN and revised hours TIS as follows:

1. Enter the *unfactored* hours TIS for the particular trunnion model/helicopter model combination in column (C) of Table 2.
2. Using service history for the trunnion, select the appropriate frequency of event hour factor from column (E) of Table 2 based on the total combined number of takeoffs and external load lifts per hour shown in column (D).
3. Multiply the value for *unfactored* hours TIS entered in column (C) by the appropriate value in column (E) for the frequency of event hour factor as determined in step 2. Enter the result in column (F) of Table 2. This is the total FACTORED flight hours for the particular trunnion model/helicopter model combination.
4. Enter the value for FACTORED flight hours from column (F) of Table 2 into column (C) of Table 3.
5. Using Table 3, multiply the value for FACTORED flight hours in column (C) by the appropriate RIN conversion factor listed in column (D), by the appropriate RIN adjustment factor in column (E), and enter the result in column (F). This is the accumulated RIN to-date for the particular trunnion model/helicopter model combination.
6. Add the accumulated RIN subtotals for the various trunnion model/helicopter model combinations in column (F) of Table 3 and enter the result in the space provided. This is the total accumulated RIN for the trunnion.
7. Add the factored flight hour subtotals for the various trunnion model/helicopter model combinations as determined in steps 1 through 4. This is the total revised hours TIS for the trunnion when the exact number of takeoffs and external load lifts is *unknown.*

Sample Trunnion Calculation

Given the following known service history for the trunnion:

Trunnion, P/N 204–011–105–001, was first purchased as a United States military surplus part with valid historical records. The trunnion had accumulated 550 hours military TIS on an Army UH–1H.

The trunnion was first installed on a restricted category UH–1H former military helicopter (1100 T.O. hp SLS rating) for 450 hours TIS. It is known that the helicopter was used primarily for aerial surveying for the first 200 hours of operation. The exact number of takeoffs and external load lifts is unknown, but it is known that the helicopter averaged less than 16 takeoffs per hour with no external load lifts. It was subsequently used for repeated heavy lift operation for the next 250 hours of operation and averaged between 25 and 31 combined takeoffs and external load lifts per hour during this period of time.

The trunnion was then removed and subsequently installed on a restricted category UH–1E former military helicopter (1100 T.O. hp SLS rating) for a total of 150 hours TIS with accurate records indicating that it experienced 100 takeoffs and 2,450 external load lifts.

Calculate the FACTORED flight hours and total accumulated RIN for the trunnion as follows:

FACTORED Flight Hours and Accumulated RIN while installed in U.S. military Model UH–1H:

Calculate FACTORED flight hours from Table 2 as follows:

FACTORED Flight Hours

= (*unfactored* hours TIS) × (frequency of event hour factor)
=(column C) × (column E)
=(550) × (1)
=550 hours

Then using Table 3, calculate the accumulated RIN as follows:

Accumulated RIN
= (FACTORED flight hours) × (RIN conversion factor) × (RIN adjustment factor)
= (column C) × (column D) × (column E)
= (550) × (20) × (1)
= 11,000 RIN

FACTORED Flight Hours and Accumulated RIN while installed in restricted category Model UH–1H:

Calculate FACTORED flight hours from Table 2 as follows:

FACTORED Flight Hours (for first 200 hours)
= (*unfactored* hours TIS) × (frequency of event hour factor)
= (column C) × (column E)
= (200) × (1)
= 200 hours

FACTORED Flight Hours (for next 250 hours)
= (*unfactored* hours TIS) × (frequency of event hour factor)
= (column C) × (column E)
=(250) × (2)
=500 hours

Then using Table 3, calculate the accumulated RIN as follows:

Accumulated RIN
= (FACTORED flight hours) × (RIN conversion factor) × (RIN adjustment factor)
= (column C) × (column D) × (column E)
= (200) × (20) × (1) + (500) × (20) × (1)
= 4,000 + 10,000
= 14,000 RIN

FACTORED Flight Hours and Accumulated RIN while installed in restricted category Model UH–1E:

Calculate the accumulated RIN from Table 1 and the given number of takeoffs and external load lifts as follows:

Accumulated RIN
= (number of takeoffs × RIN factor per takeoff) + (number of external load lifts × RIN factor per external load lifts)
= (column C) × (column D) + (column F) × (column G)
= (100) × (1.5) + (2,450) × (3)
= 7,500 RIN

Calculate the Total Accumulated RIN and Revised Hours TIS as follows:

The total accumulated RIN to-date for the trunnion is the sum of the subtotals from Tables 1 and 3.

Total Accumulated RIN
= 11,000 + 14,000 + 7,500
= 32,500

The total FACTORED flight hours for the trunnion is the sum of the subtotals from Table 2.

Total FACTORED Flight Hours
= 550 + 200 + 500
= 1,250 hours

The revised hours TIS to-date for the trunnion is the sum of the total FACTORED flight hours and the additional *unfactored* hours TIS for the trunnion when the exact number of takeoff and external load lifts is *known.*

Revised Hours TIS
= 550 + 200 + 500 + 150
= 1,250 + 150
= 1,400 hours

Both the total accumulated RIN and the revised hours TIS need to be determined and checked for exceeding the allowable life limits for the trunnion.

The values for the sample problem are shown in Tables 1–3 for illustration purposes only.

BILLING CODE 4910–13–U

Trunnion RIN Calculation Based on Takeoffs and External Load Lifts

Trunnion A/C Model Installation	Trunnion P/N 204-011-105	Number Of Takeoffs	RIN Factor Per Takeoff	Total Takeoff RIN	Number of External Load Lifts	RIN Factor Per External Load Lift	Total External Load Lift RIN	Accumulated RIN
(A)	(B)	(C)	(D)	(E) =(C) x (D)	(F)	(G)	(H) =(F) x (G)	(I) =(E) + (H)
Restricted Category TIS (≤700 T.O. hp SLS)	204-011-105-001		0.25			0.5		
Restricted Category TIS (700<T.O. hp SLS ≤1000)	204-011-105-001		1			2		
Restricted Category TIS (1000<T.O. hp SLS ≤1100)	204-011-105-001	100	1.5	150	2,450	3	7,350	7,500
Restricted Category TIS (1100<T.O. hp SLS ≤1290)	204-011-105-001		5			10		
Restricted Category TIS (>1290 T.O. hp SLS)	204-011-105-001		Contact FAA*			Contact FAA*		Contact FAA*
Total RIN=								*7,500*

*Contact FAA at (817) 222-5447

Appendix 3 - Table 1

Calculation of Trunnion FACTORED Flight Hours

Trunnion A/C Model Installation	Trunnion P/N 204-011-105	*Unfactored* Hours TIS on Model	Frequency Of Events Per Hour	Frequency of Event Hour Factor	FACTORED Flight Hours On Model
(A)	(B)	(C)	(D)	(E)	(F) = (C) x (E)
Restricted Category TIS (≤1000 T.O. hp SLS))	204-011-105-001		1.0-40.00	1.00	
			Greater than 40.00	Contact FAA*	
			Unknown	1.00	
Restricted Category TIS (1000<T.O. hp SLS ≤1100)	204-011-105-001	***200***	1.0-20.00	1.00	***200***
		250	20.01-44.00	2.00	***500***
			44.01-69.00	3.00	
			Greater than 69.00	Contact FAA*	
			Unknown	3.00	
Restricted Category TIS (1100<T.O. hp SLS ≤1290)	204-011-105-001		1.0-5.00	1.00	
			5.01-8.00	1.50	
			8.01-12.00	2.00	
			12.01-18.00	3.00	
			18.01-32.00	5.00	
			32.01-48.00	7.00	
			48.01-62.00	9.00	
			Greater than 62.00	Contact FAA*	
			Unknown	9.00	
Military TIS	204-011-105-001				
(≤1100 T.O. hp SLS)		***550***	All	1.00	***550***
(≤1290 T.O. hp SLS)			All	2.00	
(>1290 T.O. hp SLS)			All	Contact FAA*	

*Contact FAA at (817) 222–5447

Appendix 3 - Table 2

Trunnion RIN Calculation Based on Hours TIS

Trunnion A/C Model Installation	Trunnion P/N 204-011-105	FACTORED Flight Hours On Model	RIN Conversion Factor	RIN Adjustment Per AD 2000-15-52	Accumulated RIN
(A)	(B)	(C) (From Table 2 of Appendix I)	(D)	(E)	(F) =(C) x (D) x (E)
Restricted Category or Military TIS with (≤1000 T.O. hp SLS)	204-011-105-001		20	1.0	
Restricted Category or Military TIS with (1000<T.O. hp SLS ≤1100)	204-011-105-001	*1,250*	20	1.0	25,000
Restricted Category or Military TIS with (1100<T.O. hp SLS ≤1290)	204-011-105-001		20	1.0	
Restricted Category or Military TIS with (>1290 T.O. hp SLS)	204-011-105-001	Contact FAA*	Contact FAA*	Contact FAA*	Contact FAA*
Total RIN=					*25,000*

Contact FAA at (817) 222–5447

Appendix 3 - Table 3

Subtotals for the FACTORED Flight Hours and Accumulated RIN For Table 3 of the Sample Trunnion Calculation:

FACTORED Flight Hours				Accumulated RIN
550	X	20	=	11,000
200	X	20	=	4,000
500	X	20	=	10,000
1,250				25,000

BILLING CODE 4910–13–C

(e) This amendment becomes effective on March 8, 2002.

Issued in Fort Worth, Texas, on January 22, 2002.

Eric Bries,

Acting Manager, Rotorcraft Directorate, Aircraft Certification Service.

[FR Doc. 02–2422 Filed 1–31–02; 8:45 am]

BILLING CODE 4910–13–U

DEPARTMENT OF TRANSPORTATION

Federal Aviation Administration

14 CFR Part 39

[Docket No. 2001–SW–38–AD; Amendment 39–12625; AD 2002–01–30]

RIN 2120–AA64

Airworthiness Directives; Eurocopter France Model SE 3130, SE 313B, SA 315B, SE 3160, SA 316B, SA 316C, SA 3180, SA 318B, SA 318C, and SA 319B Helicopters

AGENCY: Federal Aviation Administration, DOT.

ACTION: Final rule; request for comments.

SUMMARY: This amendment adopts a new airworthiness directive (AD) for Eurocopter France (ECF) Model SE 3130, SE 313B, SA 315B, SE 3160, SA 316B, SA 316C, SA 3180, SA 318B, SA 318C, and SA 319B helicopters with a certain main gearbox (MGB) installed. This action requires inspecting the magnetic plug for magnetic particles at specified intervals in addition to the MGB inspections currently required. This AD also requires, within 50 hours time-in-service (TIS), dye-penetrant inspecting the MGB bevel gear for a crack, and if a crack is found, replacing the cracked bevel gear with an airworthy bevel gear before further flight. This amendment is prompted by an MGB failure due to a cracked bevel gear. This condition, if not corrected, could result in failure of the MGB, loss of the main rotor drive, and subsequent loss of control of the helicopter.

DATES: Effective February 19, 2002.

Comments for inclusion in the Rules Docket must be received on or before April 2, 2002.

ADDRESSES: Submit comments in triplicate to the Federal Aviation Administration (FAA), Office of the Regional Counsel, Southwest Region, Attention: Rules Docket No. 2001–SW–38–AD, 2601 Meacham Blvd., Room 663, Fort Worth, Texas 76137. You may also send comments electronically to the Rules Docket at the following address: 9-asw-adcomments@faa.gov.

FOR FURTHER INFORMATION CONTACT: Ed Cuevas, Aviation Safety Engineer, FAA, Rotorcraft Directorate, Regulations Group, Fort Worth, Texas 76193–0111, telephone (817) 222–5355, fax (817) 222–5961.

SUPPLEMENTARY INFORMATION: The Direction Generale De L'Aviation Civile (DGAC), the airworthiness authority for France, notified the FAA that an unsafe condition may exist on ECF Model SE 3130, SE 313B, SA 315B, SE 3160, SA 316B, SA 316C, SA 3180, SA 318B, SA 318C, and SA 319B helicopters with certain MGBs installed. The DGAC advises of the discovery of a crack on the bevel gear installed on an Alouette helicopter, which may cause failure of the MGB, subsequent loss of the main rotor drive, and an auto-rotation landing.

ECF has issued Alert Telex 01.67 and 01.32, dated April 20, 2001, and Alert Service Bulletins 01.32 and 01.67, both dated July 18, 2001, specifying a dye-penetrant inspection of both bevel gear faces in the coupling areas of the bevel gear and the bevel gear housing assembly of the MGB. The DGAC classified these service bulletins as mandatory and issued ADs 2001–149–044(A) R1, 2001–178–058(A) R1, and 2001–179–061(A) R1, all dated August 8, 2001, to ensure the continued airworthiness of these helicopters in France.

These helicopter models are manufactured in France and are type certificated for operation in the United States under the provisions of 14 CFR 21.29 and the applicable bilateral agreement. Pursuant to the applicable bilateral agreement, the DGAC has kept the FAA informed of the situation described above. The FAA has examined the findings of the DGAC, reviewed all available information, and determined that AD action is necessary for products of this type design that may operate in the United States.

This unsafe condition may exist or develop on other helicopters of the same type designs with these certain MGBs installed. We are issuing this AD to prevent failure of an MGB due to a cracked bevel gear, loss of the main rotor drive, and subsequent loss of control of the helicopter. This AD requires inspecting the MGB magnetic plug for metal particles at intervals not to exceed 10 hours TIS. This AD also requires, within 50 hours TIS, dye-penetrant inspecting the bevel gear for a crack and, if a crack is found, replacing the unairworthy bevel gear with an airworthy bevel gear before further flight. Replacing a cracked bevel gear is terminating action for the requirements of this AD.

None of the eight MGBs affected by this action are currently installed on helicopters on the U.S. Register. All helicopters included in the applicability of this rule that have an affected MGB installed are currently operated by non-U.S. operators under foreign registry; therefore, they are not directly affected by this AD action. However, the FAA considers that this rule is necessary to ensure that the unsafe condition is addressed in the event that any of these affected MGBs are imported and installed on helicopters on the U.S. Register in the future.

Should an affected MGB be imported and installed on a helicopter on the U.S. Register in the future, it would require approximately ½ work hour to review the records for a certain MGB. If the affected MGB is present, the FAA estimates that it would take 30 work hours per helicopter to inspect the bevel gear. The average labor rate is $60 per work hour. Required parts would cost approximately $14,500 per helicopter to replace a cracked bevel gear. Based on these figures, the total cost impact of this AD would be $16,330, assuming one helicopter requires replacement of the bevel gear.

Since this AD action does not affect any helicopter that is currently on the U.S. register, it has no adverse economic impact and imposes no additional burden on any person. Therefore, notice and public procedures hereon are unnecessary and the amendment may be made effective in less than 30 days after publication in the **Federal Register**.

Comments Invited

Although this action is in the form of a final rule that involves requirements affecting flight safety and, thus, was not preceded by notice and an opportunity for public comment, comments are invited on this rule. Interested persons are invited to comment on this rule by submitting such written data, views, or arguments as they may desire. Communications should identify the Rules Docket number and be submitted in triplicate to the address specified under the caption **ADDRESSES.** All communications received on or before the closing date for comments will be considered, and this rule may be amended in light of the comments received. Factual information that supports the commenter's ideas and suggestions is extremely helpful in evaluating the effectiveness of the AD action and determining whether additional rulemaking action would be needed.

Comments are specifically invited on the overall regulatory, economic, environmental, and energy aspects of the rule that might suggest a need to modify the rule. All comments submitted will be available in the Rules Docket for examination by interested persons. A report that summarizes each FAA-public contact concerned with the substance of this AD will be filed in the Rules Docket.

Commenters wishing the FAA to acknowledge receipt of their mailed comments submitted in response to this rule must submit a self-addressed, stamped postcard on which the following statement is made: ''Comments to Docket No. 2001–SW–38–AD.'' The postcard will be date stamped and returned to the commenter.

The regulations adopted herein will not have a substantial direct effect on the States, on the relationship between the national Government and the States, or on the distribution of power and responsibilities among the various levels of government. Therefore, it is determined that this final rule does not have federalism implications under Executive Order 13132.

The FAA has determined that notice and prior public comment are unnecessary in promulgating this regulation; therefore, it can be issued immediately to correct an unsafe condition in aircraft since none of these model helicopters are registered in the United States. The FAA has also determined that this regulation is not a ''significant regulatory action'' under Executive Order 12866. It has been determined further that this action involves an emergency regulation under DOT Regulatory Policies and Procedures (44 FR 11034, February 26, 1979). If it is determined that this emergency regulation otherwise would be significant under DOT Regulatory Policies and Procedures, a final regulatory evaluation will be prepared and placed in the Rules Docket. A copy of it, if filed, may be obtained from the Rules Docket at the location provided under the caption **ADDRESSES.**

List of Subjects in CFR Part 39

Air transportation, Aircraft, Aviation safety, Safety.

Adoption of the Amendment

Accordingly, pursuant to the authority delegated to me by the Administrator, the Federal Aviation Administration amends part 39 of the Federal Aviation Regulations (14 CFR part 39) as follows:

PART 39—AIRWORTHINESS DIRECTIVES

1. The authority citation for part 39 continues to read as follows:

Authority: 49 U.S.C. 106(g), 40113, 44701.

§ 39.13 [Amended]

2. Section 39.13 is amended by adding a new airworthiness directive to read as follows:

2002–01–30 Eurocopter France: Amendment 39–12625. Docket No. 20.1–SW–38–AD.

Applicability: Model SE 3130, SE 313B, SA 315B, SE 3160, SA 316B, SA 316C, SA 3180, SA 318B, SA 318C, and SA 319B, helicopters with a main gearbox (MGB), part number 319A62–00–000.4 with serial number M1242, M2194, M2516, NT3488, NT3563, 3–2888, 3–3091, or 3–11336, installed, certificated in any category.

Note 1: This AD applies to each helicopter identified in the preceding applicability provision, regardless of whether it has been otherwise modified, altered, or repaired in the area subject to the requirements of this AD. For helicopters that have been modified, altered, or repaired so that the performance of the requirements of this AD is affected, the owner/operator must request approval for an alternative method of compliance in accordance with paragraph (d) of this AD. The request should include an assessment of the effect of the modification, alteration, or repair on the unsafe condition addressed by this AD; and if the unsafe condition has not been eliminated, the request should include specific proposed actions to address it.

Compliance: Required as indicated, unless accomplished previously.

To prevent failure of the MGB due to a cracked bevel gear, loss of the main rotor drive, and subsequent loss of control of the helicopter, accomplish the following:

(a) At intervals not to exceed 10 hours time-in-service (TIS), inspect the MGB magnet plug for metal particles. This 10-hour inspection is in addition to those currently required by the maintenance manual.

(b) Within 50 hours TIS, dye-penetrant inspect both faces of the MGB bevel gear in the coupling area of the bevel gear shaft and in the coupling area of the bevel gear housing for a crack. If a crack is found, replace the unairworthy part with an airworthy part before further flight.

Note 2: Eurocopter France Alert Service Bulletins 01.32 and 01.67, both dated July 18, 2001, pertain to the subject of this AD.

(c) Completing the dye-penetrant inspection required by paragraph (b) of this AD and finding no cracks or replacing the bevel gear with an airworthy bevel gear is terminating action for the requirements of this AD.

(d) An alternative method of compliance or adjustment of the compliance time that provides an acceptable level of safety may be used if approved by the Manager, Regulations Group, Rotorcraft Directorate, FAA. Operators shall submit their requests through an FAA Principal Maintenance Inspector, who may concur or comment and then send it to the Manager, Regulations Group.

Note 3: Information concerning the existence of approved alternative methods of compliance with this AD, if any, may be obtained from the Regulations Group.

(e) Special flight permits may be issued in accordance with 14 CFR 21.197 and 21.199 to operate the helicopter to a location where the requirements of this AD can be accomplished.

(f) This amendment becomes effective on February 19, 2002.

Note 4: The subject of this AD is addressed in Direction Generale De L'Aviation Civile (France) ADs 2001–149–044(A) R1, 2001–178–058(A) R1, and 2001–179–061(A) R1, all dated August 8, 2001.

Issued in Fort Worth, Texas, on January 22, 2002.

Eric Bries,

Acting Manager, Rotorcraft Directorate, Aircraft Certification Service.

[FR Doc. 02–2423 Filed 1–31–02; 8:45 am]

BILLING CODE 4910–13–M

DEPARTMENT OF TRANSPORTATION

Federal Aviation Administration

14 CFR Part 39

[Docket No. 2001–SW–71–AD; Amendment 39–12627; AD 2001–26–54]

RIN 2120–AA64

Airworthiness Directives; Eurocopter France Model EC 155B Helicopters

AGENCY: Federal Aviation Administration, DOT.

ACTION: Final rule; request for comments.

SUMMARY: This document publishes in the **Federal Register** an amendment adopting Airworthiness Directive (AD) 2001–26–54, which was sent previously to all known U.S. owners and operators of Eurocopter France (ECF) Model EC 155B helicopters by individual letters. This AD requires, before further Instrument Flight Rule (IFR) flight, inserting a copy of the AD into the Limitations Section of the Rotorcraft Flight Manual (RFM) and replacing each affected Smart Multifunction Display (SMD45H) as specified. Removing the AD from the RFM is required after replacing each affected SMD45H. This AD is prompted by the discovery of an error in the assembly of an internal connector of the SMD45H that sometimes results in an inversion of the display information. The SMD45H provides the flightcrew with essential flight and navigation information. The actions specified by this AD are intended to prevent erroneous flight or

navigation display information, produced by a faulty SMD45H, and subsequent loss of control of the helicopter.

DATES: Effective February 19, 2002 to all persons except those persons to whom it was made immediately effective by Emergency AD 2001–26–54, issued on December 21, 2001, which contained the requirements of this amendment.

Comments for inclusion in the Rules Docket must be received on or before April 2, 2002.

ADDRESSES: Submit comments in triplicate to the Federal Aviation Administration (FAA), Office of the Regional Counsel, Southwest Region, Attention: Rules Docket No. 2001–SW–71–AD, 2601 Meacham Blvd., Room 663, Fort Worth, Texas 76137. You may also send comments electronically to the Rules Docket at the following address: 9-asw-adcomments@faa.gov.

FOR FURTHER INFORMATION CONTACT: Jorge Castillo, Aviation Safety Engineer, FAA, Rotorcraft Directorate, Rotorcraft Standards Staff, Fort Worth, Texas 76193–0110, telephone (817) 222–5127, fax (817) 222–5961.

SUPPLEMENTARY INFORMATION: On December 21, 2001, the FAA issued Emergency AD 2001–26–54 for ECF Model EC 155B which requires, before further IFR flight, inserting a copy of the AD into the Limitations Section of the RFM and replacing each affected SMD45H as specified. Removing the AD from the RFM is required after replacing each affected SMD45H. That action was prompted by the discovery of an error in the assembly of an internal connector of the SMD45H that sometimes results in an inversion of the display information. The SMD45H provides the flightcrew with essential flight and navigation information. The emergency AD was issued to prevent erroneous flight or navigation display information, produced by a faulty SMD45H, and subsequent loss of control of the helicopter.

The FAA has reviewed Eurocopter Alert Service Bulletin No. 04A002, dated October 3, 2001 (ASB). The ASB specifies, in order to resume IFR operation, to immediately replace certain SMD45Hs. The ASB also specifies affixing placards and inserting RFM supplements informing the pilot of display anomalies, certain restrictions, and certain limitations until all SMD45Hs have been replaced.

The Direction Generale De L'Aviation Civile (DGAC), the airworthiness authority for France, notified the FAA that an unsafe condition may exist on Eurocopter France Model EC 155B helicopters. The DGAC advises that sometimes an inversion of the symbols occurs on some of the SMD45Hs. The DGAC classified the ASB as mandatory and issued AD No. 2001–439–002(A)R1, dated October 31, 2001.

This helicopter model is manufactured in France and is type certificated for operation in the United States under the provision of 14 CFR 21.29 and the applicable bilateral agreement. Pursuant to this bilateral agreement, the DGAC has kept the FAA informed of the situation described above. The FAA has examined the findings of the DGAC, reviewed all available information, and determined that AD action is necessary for products of this type design that are certificated for operations in the United States.

Since the unsafe condition described is likely to exist or develop on other helicopters of the same type design, the FAA issued Emergency AD 2001–26–54 to prevent erroneous flight or navigation display information, produced by a faulty SMD45H, and subsequent loss of control of the helicopter. The AD requires, before further IFR flight, the following:

- Inserting a copy of the AD into the Limitations Section of the RFM to prohibit IFR flight until the affected SMD45Hs are replaced.
- Replacing each affected SMD45H with the corresponding SMD45Hs as specified in the AD.
- After replacing the SMD45Hs in accordance with the AD, removing the AD from the RFM.

Replacing each specified SMD45H and removing the AD from the RFM are terminating actions for the requirements of the AD. The short compliance time involved is required because the previously described critical unsafe condition can adversely affect the controllability of the helicopter. Therefore, the actions described previously are required before further IFR flight, and this AD must be issued immediately.

Since it was found that immediate corrective action was required, notice and opportunity for prior public comment thereon were impracticable and contrary to the public interest, and good cause existed to make the AD effective immediately by individual letters issued on December 21, 2001 to all known U.S. owners and operators of ECF Model EC 155B. These conditions still exist, and the AD is hereby published in the **Federal Register** as an amendment to 14 CFR 39.13 to make it effective to all persons.

The FAA estimates that 3 helicopters of U.S. registry will be affected by this AD, that it will take approximately 6 work hours per helicopter to replace each SMD45H, and that the average labor rate is $60 per work hour. The manufacturer has stated that they will provide the SMD45Hs at no cost. Based on these figures, the total cost impact of the AD on U.S. operators is estimated to be $1080 to replace a SMD45H on each affected helicopter.

Comments Invited

Although this action is in the form of a final rule that involves requirements affecting flight safety and, thus, was not preceded by notice and an opportunity for public comment, comments are invited on this rule. Interested persons are invited to comment on this rule by submitting such written data, views, or arguments as they may desire. Communications should identify the Rules Docket number and be submitted in triplicate to the address specified under the caption **ADDRESSES**. All communications received on or before the closing date for comments will be considered, and this rule may be amended in light of the comments received. Factual information that supports the commenter's ideas and suggestions is extremely helpful in evaluating the effectiveness of the AD action and determining whether additional rulemaking action would be needed.

Comments are specifically invited on the overall regulatory, economic, environmental, and energy aspects of the rule that might suggest a need to modify the rule. All comments submitted will be available in the Rules Docket for examination by interested persons. A report that summarizes each FAA-public contact concerned with the substance of this AD will be filed in the Rules Docket.

Commenters wishing the FAA to acknowledge receipt of their mailed comments submitted in response to this rule must submit a self-addressed, stamped postcard on which the following statement is made: ''Comments to Docket No. 2001–SW–71–AD.'' The postcard will be date stamped and returned to the commenter.

The regulations adopted herein will not have a substantial direct effect on the States, on the relationship between the national Government and the States, or on the distribution of power and responsibilities among the various levels of government. Therefore, it is determined that this final rule does not have federalism implications under Executive Order 13132.

The FAA has determined that this regulation is an emergency regulation that must be issued immediately to

correct an unsafe condition in aircraft, and that it is not a ''significant regulatory action'' under Executive Order 12866. It has been determined further that this action involves an emergency regulation under DOT Regulatory Policies and Procedures (44 FR 11034, February 26, 1979). If it is determined that this emergency regulation otherwise would be significant under DOT Regulatory Policies and Procedures, a final regulatory evaluation will be prepared and placed in the Rules Docket. A copy of it, if filed, may be obtained from the Rules Docket at the FAA, Office of the Regional Counsel, Southwest Region, 2601 Meacham Blvd., Room 663, Fort Worth, Texas.

List of Subjects in 14 CFR Part 39

Air transportation, Aircraft, Aviation safety, Safety.

Adoption of the Amendment

Accordingly, pursuant to the authority delegated to me by the Administrator, the Federal Aviation Administration amends part 39 of the Federal Aviation Regulations (14 CFR part 39) as follows:

PART 39—AIRWORTHINESS DIRECTIVES

1. The authority citation for part 39 continues to read as follows:

Authority: 49 U.S.C. 106(g), 40113, 44701.

§ 39.13 [Amended]

2. Section 39.13 is amended by adding a new airworthiness directive to read as follows:

2001 26–54 Eurocopter France: Amendment 39–12627. Docket No. 2001–SW–71–AD.

Applicability: Model EC 155B helicopters with a Smart Multifunction Display (SMD45H) as the primary flight display (PFD) or navigation display (ND), certificated in any category.

Note 1: This AD applies to each helicopter identified in the preceding applicability provision, regardless of whether it has been otherwise modified, altered, or repaired in the area subject to the requirements of this AD. For helicopters that have been modified, altered, or repaired so that the performance of the requirements of this AD is affected, the owner/operator must request approval for an alternative method of compliance in accordance with paragraph (e) of this AD. The request should include an assessment of the effect of the modification, alteration, or repair on the unsafe condition addressed by this AD; and if the unsafe condition has not been eliminated, the request should include specific proposed actions to address it.

Compliance: Required before further Instrument Flight Rule (IFR) flight, unless accomplished previously.

To prevent erroneous flight or navigation display information, produced by a faulty SMD45H, and subsequent loss of control of the helicopter, accomplish the following:

(a) Insert a copy of this AD into the Limitations Section of the Rotorcraft Flight Manual (RFM) to prohibit IFR flight until the old part-numbered SMD45Hs listed in Table 1 of this AD are replaced.

(b) Replace each old part-numbered SMD45H with the corresponding new part-numbered SMD45H as specified in Table 1 of this AD:

TABLE 1—RETROFIT KIT EC135–31A–002–2.C SMD45H

Old part number	New part number
(1) C19209VF11	C19209VG11
(2) C19267VF11	C19267VG11
(3) C19267EF10	C19267EG10

(c) After replacing the old part-numbered SMD45Hs in accordance with paragraph (b) of this AD, remove this AD from the RFM.

(d) Replacing each specified SMD45H and removing this AD from the RFM are terminating actions for the requirements of this AD.

(e) An alternative method of compliance or adjustment of the compliance time that provides an acceptable level of safety may be used if approved by the Manager, Regulations Group, Rotorcraft Directorate, FAA. Operators shall submit their requests through an FAA Principal Maintenance Inspector, who may concur or comment and then send it to the Manager, Regulations Group.

Note 2: Information concerning the existence of approved alternative methods of compliance with this AD, if any, may be obtained from the Regulations Group.

(f) Special flight permits will not be issued.

(g) This amendment becomes effective on February 19, 2002, to all persons except those persons to whom it was made immediately effective by Emergency AD 2001–26–54, issued December 21, 2001, which contained the requirements of this amendment.

Note 3: The subject of this AD is addressed in Direction Generale De L'Aviation Civile (France) AD No. 2001–439–002(A)R1, October 31, 2001.

Issued in Fort Worth, Texas, on January 17, 2002.

David A. Downey,

Manager, Rotorcraft Directorate, Aircraft Certification Service.

[FR Doc. 02–2425 Filed 1–31–02; 8:45 am]

BILLING CODE 4910–13–P

DEPARTMENT OF TRANSPORTATION

Federal Aviation Administration

14 CFR Part 71

[Airspace Docket No. 01–AWP–26]

Establishment of Class E Airspace; Kayenta, AZ

AGENCY: Federal Aviation Administration (FAA), DOT.

ACTION: Final rule.

SUMMARY: This action establishes a Class E airspace at Kayenta, AZ. The establishment of a Special Area Navigation (RNAV) Global Positing System (GPS) Standard Instrument Approach Procedure (SIAP) RNAV (GPS) Runway (RWY) 02 SIAP, RNAV (GPS) RWY 20 SIAP, and the existence of a Special Non-Directional Radio Beacon (NDB) SIAP at Bedard Field, Kayenta AZ has made action necessary. Additional controlled airspace extending upward from 700 feet or more above the surface of the earth is needed to contain aircraft executing the RNAV (GPS) RWY 02 SIAP, RNAV (GPS) RWY 20 SIAP and NDB SIAP to Bedard Field. The intended effect of this action is to provide adequate controlled airspace for Instrument Flight Rules operations at Bedard Field, Kayenta, AZ.

EFFECTIVE DATE: 0901 UTC February 21, 2002.

FOR FURTHER INFORMATION CONTACT: Jeri Carson, Airspace Specialist, Airspace Branch, AWP–520, Air Traffic Division, Western-Pacific Region, Federal Aviation Administration, 15000 Aviation Boulevard, Lawndale, California 90261, telephone (310) 725–6611.

SUPPLEMENTARY INFORMATION:

History

On November 7, 2001, the FAA proposed to amend 14 CFR part 71 by establishing a Class E airspace area at Kayenta, AZ (66 FR 56258). Additional controlled airspace extending upward from 700 feet or more above the surface is needed to contain aircraft executing the RNAV (GPS) RWY 02 SIAP, RNAV (GPS) RWY 20 SIAP, and a NBD SIAP at Bedard Field, Kayenta, AZ. This action will provide adequate controlled airspace for aircraft executing the RNAV (GPS) RWY 02 SIAP, RNAV (GPS) RWY 20 SIAP, and a NDB SIAP to Bedard Field, Kayenta, AZ.

Interested parties were invited to participate in this rulemaking proceeding by submitting written comments on the proposal to the FAA. No comments to the proposal were

received. Class E airspace designations for airspace extending from 700 feet or more above the surface of the earth are published in paragraph 6005 of FAA Order 7400.9J dated August 31, 2001, and effective September 16, 2001, which is incorporated by reference in 14 CFR 71.1. The Class E airspace designation listed in this document will be published subsequently in the Order.

The Rule

This amendment to 14 CFR part 71 establishes a Class E airspace area at Kayenta, CA. The establishment of a Special RNAV (GPS) RWY 02, RNAV (GPS) RWY 20 SIAP has made this action necessary. The effect of this action will provide adequate airspace for aircraft executing the RNAV (GPS) RWY 02, RNAV (GPS) RWY 20, and NDB SIAP at Bedard Field, Kayenta, AZ.

The FAA has determined that this regulation only involves an established body of technical regulations for which frequent and routine amendments are necessary to keep them operationally current. Therefore, this regulation—(1) is not a ''significant regulatory action'' under Executive Order 128660; (2) is not a ''significant rule'' under DOT Regulatory Policies and Procedures (44 FR 11034; February 26, 1979); and (3) does not warrant preparation of a Regulatory Evaluation as the anticipated impact is so minimal. Since this is a routine matter that will only affect air traffic procedures and air navigation, it is certified that this rule will not have a significant economic impact on a substantial number of small entities under the criteria of the Regulatory Flexibility Act.

List of Subjects in 14 CFR Part 71

Airspace, Incorporation by reference, Navigation (air).

Adoption of the Amendment

In consideration of the foregoing, the Federal Aviation Administration amends 14 CFR part 71 as follows:

PART 71—DESIGNATION OF CLASS A, CLASS B, CLASS C, CLASS D, AND CLASS E AIRSPACE AREAS; AIRWAYS; ROUTES; AND REPORTING POINTS

1. The authority citation for 14 CFR part 71 continues to read as follows:

Authority: 49 U.S.C. 106(g), 40103, 40113, 40120; E.O. 10854, 24 FR 9565, 3 CFR, 1959–1963 Comp., p. 389; 14 CFR 11.69.

§ 71.1 [Amended]

2. The incorporation by reference in 14 CFR 71.1 of the Federal Aviation Administration Order 7400.9J, Airspace Designations and Reporting Points, dated August 31, 2001, and effective September 16, 2001, is amended as follows:

Paragraph 6005 Class E airspace areas extending upward from 700 feet or more above the surface of the earth.

* * * * *

AWP AZ E5 Kayenta, AZ [NEW]

Bedard Field, AZ
(Lat. 36°28′18″N, long. 110°25′05″W)

That airspace extending upward from 700 feet above the surface within a 6.6 mile radius of the Bedard Field, and that airspace within 2.0 miles each side of the 219° bearing from the airport extending from the 6.6 mile radius to 10 miles southwest of Bedard Field, and that airspace within 1.0 mile each side of the 034° bearing from the airport extending from the 6.6 mile radius to 11 miles northeast of Bedard Field.

* * * * *

Issued in Los Angeles, California, on January 8, 2002.

John Clancy,

Manager Air Traffic Division, Western-Pacific Region.

[FR Doc. 02–2539 Filed 1–31–02; 8:45 am]

BILLING CODE 4910–13–M

DEPARTMENT OF TRANSPORTATION

Office of the Secretary

14 CFR Part 330

[Docket OST–2001–10885]

RIN 2105–AD06

Procedures for Compensation of Air Carriers

AGENCY: Office of the Secretary, DOT.

ACTION: Final rule; amendment.

SUMMARY: On September 22, 2001, President Bush signed into law the Air Transportation Safety and System Stabilization Act (''the Act''). The Act makes available to the President funds to compensate air carriers, as defined in the Act, for direct losses suffered as a result of any Federal ground stop order and incremental losses beginning September 11, 2001, and ending December 31, 2001, resulting from the September 11 terrorist attacks on the United States. In order to fulfill Congress' intent to expeditiously provide compensation to eligible air carriers, the Department used procedures set out in Program Guidance Letters to make initial estimated payments amounting to about 50 percent of the authorized funds. On October 29, 2001, the Department published a final rule and request for comments establishing application procedures for air carriers interested in requesting compensation under this statute. On January 2, 2002, the Department published amendments to the final rule responding to comments and establishing a deadline for submitting applications by indirect air carriers and wet lessors. This document further amends the final rule to allow additional time for indirect air carriers and wet lessors to submit applications for compensation.

DATES: This rule is effective February 1, 2002.

FOR FURTHER INFORMATION CONTACT: Steven Hatley, U.S. Department of Transportation, Office of International Aviation, 400 7th Street, SW., Room 6402, Washington, DC 20590. Telephone 202–366–1213.

SUPPLEMENTARY INFORMATION: As a consequence of the terrorist attacks on the United States on September 11, 2001, the U.S. commercial aviation industry suffered severe financial losses. These losses placed the financial survival of many air carriers at risk. Acting rapidly to preserve the continued viability of the U.S. air transportation system, President Bush sought and Congress enacted the Air Transportation Safety and System Stabilization Act (''the Act''), Public Law 107–42.

Under section 101(a)(2)(A–B) of the Act, a total of $5 billion in compensation is provided for ''direct losses incurred beginning on September 11, 2001, by air carriers as a result of any Federal ground stop order issued by the Secretary of Transportation or any subsequent order which continues or renews such stoppage; and the incremental losses incurred beginning September 11, 2001 and ending December 31, 2001, by air carriers as a direct result of such attacks.'' The Department of Transportation previously disbursed initial estimated payments of nearly $2.5 billion of the $5 billion amount that Congress authorized, using procedures set forth in the Department's Program Guidance Letters that were widely distributed and posted on the Department's web site.

On October 29, 2001 (66 FR 54616), the Department published in the **Federal Register** a final rule and request for comments to establish procedures for air carriers who had received or wished to receive compensation under the Act. On January 2, 2002 (67 FR 250), the Department published amendments to the final rule responding to comments and establishing a deadline for submitting requests for compensation by indirect air carriers and wet lessors. Under the amended

final rule, indirect air carriers and wet lessors could submit an application for compensation within 14 days of the January 2, 2002 publication date.

Request for Extension of Time

On January 16, 2002, the Department received a ''Request for Extension of Time to Submit Applications for Compensation Pursuant to 14 CFR Part 330'' from the New York/New Jersey Foreign Freight Forwarders and Brokers Association, Inc., the J.F.K. Airport Customs Broker Association Inc., and the South Florida Non-Vessel-Operating Common Carriers and Non-Aircraft-Operating Common Carriers Association, Inc. In the request, the Associations cite the lack of notice that indirect air carriers would be considered ''eligible'' for compensation and that 14 days is an inadequate amount of time to ''prepare, identify shipments (actual and lost), properly document all losses related to air cargo operations during the Act's stated time period (September 11 through December 31, 2001), and submit all required materials prior to the January 16, 2002 deadline.'' The Associations requested an extension through January 30, 2002.

DOT Response

After reviewing the request for extension of time, the Department has determined that a reasonable basis exists for extending the time period. First, although the compensation provisions of the Act had been implemented soon after its enactment, the Associations are correct that the first indication that indirect air carriers and wet lessors could be eligible for compensation—albeit under narrow circumstances—did not occur until January 2. Second, the Department is sensitive to the fact that small businesses may not have had the opportunity to thoroughly review the regulations and collect the necessary information within the 14 days provided. Third, extending the time period for indirect air carriers and wet lessors to submit a compensation application is consistent with the longer time period we gave air taxis (which are also primarily small businesses) to submit a compensation application. Finally, we believe that any potential prejudice to other carriers that have applied for compensation can be largely mitigated by proceeding with further payments of estimated compensation under the Act based on an estimate of the maximum number of revenue ton-miles (RTM) that could be reasonably claimed by both present and new applicants.

Accordingly, the Department hereby amends the final rule to allow an additional 7 calendar days from the date of this publication for indirect air carriers and wet lessors to submit a compensation application. However, we will adhere strictly to this new deadline. The Department will not accept late submissions unless an indirect air carrier or wet lessor demonstrates to the satisfaction of the Department that extremely unusual, extenuating circumstances, completely beyond its control, prevented it from making a timely submission and the Department determines that accepting the application is in the public interest.

Information Applicants Must Submit

Like all other applicants, indirect carriers and wet lessors (air carriers who provide ''lift'' to other air carriers under wet leases) applying under § 330.21(d), which is the section that contains the application deadline being extended today, should be careful to meet the documentation requirements of the regulations.

In administering the regulatory requirements, DOT is aware that the financial situations of some carriers may be extremely precarious, and that Congress intended they be afforded prompt action on their applications for relief. However, DOT must be scrupulous in assuring that public funds are disbursed in strict accord with statutory requirements. Thus, applicants should be aware that DOT will not process applications that fail to provide all of the information required. That information was set out in Part 330, and for all-cargo indirect air carriers and wet lessors, the data submission requirements of section 330.31 require particular attention.

A carrier that claims RTMs must document the RTMs generated for its own account, which was flown on its all-cargo flights, and it must identify the RTMs generated by other air carriers (under Aircraft, Crew, Maintenance, Insurance (ACMI) wet lease lift arrangements or other agreements). This information must be presented by carrier name and carrier code, with the number of RTMs clearly stated and segregated between RTMs generated by the claiming carrier and RTMs generated by other air carriers. Finally, applicants are again reminded that their applications must be accompanied by a certified statement, from the company's Chief Executive Officer, Chief Financial Officer, or Chief Operating Officer or, if those titles are not used, the equivalent officer, that the information was prepared under his or her supervision and is true and accurate under penalty of law. The claimant should also provide a similar certified statement from the other air carrier(s) stating that these RTMs were not claimed and will not be claimed by the other air carrier.

In meeting these requirements, applicants should especially ensure that written evidence is submitted that: (1) Demonstrates that the applicant meets the United States citizenship requirements to be an ''air carrier'' (49 U.S.C. § 40102); (2) clearly establishes the number of RTMs actually flown, segregated as necessary by the identity of the reporting carrier; (3) clearly establishes that the RTMs were generated on all-cargo flights only and not generated as ''belly cargo'' on combined passenger/cargo flights; [1] and (4) clearly establishes, in writing, both the carrier's entitlement to the RTMs and that no other carrier has claimed or will claim the RTMs.

Regulatory Analysis and Notices

This rule is an economically significant rule under Executive Order 12886, since it will facilitate the distribution of more than a billion dollars into the economy during the 12-month period following its issuance. Because of the need to move quickly to provide compensation to air carriers for the purpose of maintaining a safe, efficient, and viable commercial aviation system in the wake of the events of September 11, 2001, we are not required to provide an assessment of the potential cost and benefits of this regulatory action. The Department has determined that this rule is being issued in an emergency situation, within the meaning of Section 6(a)(3)(D) of Executive Order 12866. However, this impact is expected to be a favorable one: making these funds available to air carriers to compensate them for losses resulting from the terrorist attacks of September 11th.

Because a notice of proposed rulemaking is not required for this rulemaking under 5 U.S.C. 553, we are not required to prepare a regulatory flexibility analysis under 5 U.S.C. 604. However, we do note that this rule may have a significant economic effect on a substantial number of small entities. Among the entities in question are many indirect air carriers, wet lessors and air taxis, as well as some commuters and small certificated air carriers. In

[1] Congress set out separate eligibility schemes for passenger and cargo carriers, and included combined passenger-cargo flights within the passenger-only category. Compensation for passenger flights—including ''combi'' flights—is based upon available seat-miles, not RTMs, making it clear that Congress did not intend separate compensation for belly-cargo.

analyzing small entity impact for purposes of the Regulatory Flexibility Act, we believe that, to the extent that the rule impacts small air carriers, the impact will be a favorable one, since it will consist of receiving compensation. We have facilitated the participation of small entities in the program by allowing a longer application period for indirect air carriers, wet lessors and air taxis, which are generally the smallest carriers covered by this rule and which generally do not otherwise report traffic or financial data to the Department. The Department has also concluded that this rule does not have sufficient Federalism implications to warrant the consultation requirements of Executive Order 13132.

We are making this rule effective immediately, without prior opportunity for public notice and comment. Because of the need to move quickly to provide compensation to air carriers for the purpose of maintaining a safe, efficient, and viable commercial aviation system in the wake of the events of September 11, 2001, prior notice and comment would be impractical, unnecessary, and contrary to the public interest. Consequently, prior notice and comment under 5 U.S.C. 553 and delay of the effective date under 5 U.S.C. 801, *et seq.*, are not being provided. On the same basis, we have determined that there is good cause to make the rule effective immediately, rather than in 30 days.

The Office of Management and Budget has approved the information collection requirements of this rule, with Control Number 2105–0546.

List of Subjects in 14 CFR Part 330

Air carriers, Grant programs—transportation, Reporting and recordkeeping requirements.

Issued this 30th day of January, 2002, at Washington, DC.

Read C. Van de Water,

Assistant Secretary for Aviation and International Affairs.

For the reasons set forth in the preamble, the Department amends 14 CFR part 330 as follows:

PART 330—PROCEDURES FOR COMPENSATION OF AIR CARRIERS

1. Authority citation for Part 330 continues to read as follows:

Authority: Pub. L. 107–42, 115 Stat. 230 (49 U.S.C. 40101 note); sec. 124(d), Pub. L. 107–71, 115 Stat. 631 (49 U.S.C. 40101 note).

2. Revise § 330.21(d) introductory text to read as follows:

§ 330.21 When must air carriers apply for compensation?

* * * * *

(d) Notwithstanding any other provision of this section, if you are an eligible air carrier that did not submit an application or wishes to amend its application, you may do so by February 8, 2002 if you are one of the following:

* * * * *

[FR Doc. 02–2652 Filed 1–30–02; 4:57 pm]

BILLING CODE 4910–62–P

FEDERAL TRADE COMMISSION

16 CFR Part 303

Rules and Regulations Under the Textile Fiber Products Identification Act

AGENCY: Federal Trade Commission.

ACTION: Final rule.

SUMMARY: The Federal Trade Commission (''Commission'') announces amendments to rule 7 of the Rules and Regulations Under the Textile Fiber Products Identification Act (''Textile Rules''), to designate a new generic fiber name and establish a new generic fiber definition for a fiber manufactured by Cargill Dow, LLC (''Cargill Dow'') of Minnetonka, Minnesota. The amendments create a new subsection (y) to Rule 7 that establishes the name ''PLA'' for a fiber that Cargill Dow designates by the registered name ''Natureworks.''

EFFECTIVE DATE: February 1, 2002.

FOR FURTHER INFORMATION CONTACT: Neil Blickman, Attorney, Division of Enforcement, Federal Trade Commission, Washington, DC 20580; (202) 326–3038.

SUPPLEMENTARY INFORMATION:

I. Background

A. Statutory and Regulatory Framework

Section 4(b)(1) of the Textile Fiber Products Identification Act (''Act'') declares that a textile product will be misbranded unless it is labeled to show, among other elements, the percentages, by weight, of the constituent fibers in the product, designated by their generic names and in order of predominance by weight. 15 U.S.C. 70b(b)(1). Section 4(c) of the Act provides that the same information required by section 4(b)(1) (except the percentages) must appear in written advertisements if any disclosure or implication of fiber content is made regarding a covered textile product. 15 U.S.C. 70b(c). Section 7(c) directs the Commission to promulgate such rules, including the establishment of generic names of manufactured fibers, as are necessary to enforce the Act's directives. 15 U.S.C. 70e(c).

Rule 6 of the Textile Rules requires manufacturers to use the generic names of the fibers contained in their textile fiber products in making required disclosures of the fiber content of the products. 16 CFR 303.6. Rule 7 sets forth the generic names and definitions that the Commission has established for synthetic fibers. 16 CFR 303.7. Rule 8 sets forth the procedures for establishing new generic names. 16 CFR 303.8.

B. Procedural History

On August 28, 2000, Cargill Dow applied to the Commission for a new fiber name and definition.[1] Its application states that PLA fibers are synthetic but are derived from natural renewable resources (agricultural crops such as corn).[2] It maintained that PLA can combine certain advantages of natural fibers with those of certain synthetic fibers. Cargill Dow contended that its proprietary Natureworks PLA fiber, and PLA that may be made using alternative processes, have unique properties that, along with PLA's unique fundamental chemistry, differentiate PLA fibers from all other recognized and listed synthetic or natural fibers.

Contending that the unique chemistry of fibers made from PLA is inadequately described under existing generic names listed in the Textile Rules, Cargill Dow petitioned the Commission to establish a new generic name and definition. After an initial analysis, the Commission announced, on October 30, 2000, that it had issued Cargill Dow the designation ''CD 0001'' for temporary use in identifying PLA fiber pending a final determination as to the merits of the application for a new generic name and definition. The Commission staff further analyzed the application, and on November 17, 2000 (65 FR 69486), the Commission published a Notice of Proposed Rulemaking (''NPR'') detailing the technical aspects of Cargill Dow's fiber, and requesting public comment on Cargill Dow's application. On January 29, 2001, the comment period closed.

[1] This petition and additional information that Cargill Dow submitted are on the rulemaking record of this proceeding. This material, as well as the comments that were filed in this proceeding, are available for public inspection in accordance with the Freedom of Information Act, 5 U.S.C. 552, and the Commission's Rules of Practice, 16 CFR 4.11, at the Consumer Response Center, Public Reference Section, Room 130, Federal Trade Commission, 600 Pennsylvania Avenue, NW., Washington, DC. The comments that were filed are found under the Rules and Regulations Under the Textile Fiber Products Identification Act, 16 CFR part 303, Matter No. P948404, ''Cargill Dow Generic Fiber Petition Rulemaking.'' The comments also are available for viewing in electronic form at <<www.ftc.gov>>.

[2] PLA also is the acronym for the polymer from which the fiber is manufactured, namely polylactic acid or polylactide.

II. Description of the Fiber and Solicitation of Comments in the NPR

A. The Commission's Criteria for Granting a New Generic Fiber Name and Definition, and Related Issues

In the NPR, the Commission solicited comment on whether Cargill Dow's application meets the Commission's three criteria for granting petitions for new generic names:

1. The fiber for which a generic name is requested must have a chemical composition radically different from other fibers, and that distinctive chemical composition must result in distinctive physical properties of significance to the general public.
2. The fiber must be in active commercial use or such use must be immediately foreseen.
3. The grant of the generic name must be of importance to the consuming public at large, rather than to a small group of knowledgeable professionals such as purchasing officers for large government agencies.[3]

In the NPR, the Commission noted that repeat units of PLA are linked by ester groups, which means that PLA fiber is a polyester. The Commission agreed with Cargill Dow, however, that PLA does not fit into Rule 7's current definition of polyester. Therefore, the Commission requested public comment on whether to: (1) Broaden Rule 7's definition of polyester to include PLA fiber; (2) create a separate subcategory and definition for PLA fiber within Rule 7's definition of polyester; or (3) add a new generic fiber name and definition to Rule 7 for PLA fiber.

B. The NPR

1. Fiber Description and Proposed Name and Definition

The NPR provided a detailed description, taken from Cargill Dow's application, of PLA's chemical composition and physical and chemical properties.[4] Cargill Dow explained that PLA fibers typically are made using lactic acid as the starting material for polymer manufacture. The lactic acid comes from fermenting various sources of natural sugars. These sugars can come from annually renewable agricultural crops such as corn or sugar beets. Cargill Dow maintained that PLA's fundamental polymer chemistry allows control of certain fiber properties and makes the fiber suitable for a wide variety of technical textile fiber applications, especially apparel and performance apparel applications. Of most significance to consumers, Cargill Dow maintained that PLA fibers exhibit: (1) Low moisture absorption and high wicking, offering benefits for sports and performance apparel and products; (2) low flammability and smoke generation; (3) high resistance to ultra violet (UV) light, a benefit for performance apparel as well as outdoor furniture and furnishings applications; (4) a low index of refraction, which provides excellent color characteristics; and (5) lower specific gravity, making PLA lighter in weight than other fibers. In addition to coming from an annually renewable resource base, Cargill Dow stated that PLA fibers are readily melt-spun, offering manufacturing advantages that will result in greater consumer choice.

In the NPR, the Commission proposed the following fiber name and definition for PLA, which Cargill Dow had suggested:

> Synterra. A manufactured fiber in which the polymer is produced either (a) by the condensation of lactic acid or (b) by ring opening of the cyclic dimer, lactide, in both cases where at least 85% of the primary component is derived from a renewable resource as an integral part of the polymer chain.

In proposing this definition, the Commission noted Cargill Dow's statement that PLA used to make the fiber can be polylactic acid or polylactide. According to the company, although the lactide intermediate route used by Cargill Dow has proven most effective, direct condensation of lactic acid also will result in PLA.

2. Discussion of the Public Comments

The NPR elicited eight comments, including one from Cargill Dow.[5] Four commenters, Dystar UK Ltd, the National Corn Grower's Association, the Interface Research Corporation, and the Woolmark Company, as well as Cargill Dow, fully supported amending the Textile Rules to create a new, separate category in Rule 7 for PLA fiber and establishing a new generic fiber name and definition for Cargill Dow's fiber, as proposed by the Commission.[6] Two other commenters supported creating a new name and definition for PLA fiber, but had comments about the name and definition proposed in the NPR, as discussed below. Only one commenter, FSA, opposed creating a new name and definition for PLA.

FSA stated that PLA's physical properties and processing behavior indicate that it should be regarded as merely an advanced type of polyester with several benefits for the environment. In the NPR, although the Commission noted that the repeat units of PLA are linked by ester groups like polyester fibers, the Commission tentatively concluded that PLA fiber did not fit into the current definition for polyester in Rule 7.[7] PLA is an aliphatic polyhydroxycarboxylic acid, unlike other polyester fibers. In addition, PLA has a distinctly lower melting point and specific gravity than polyester fibers. It also appears to have better flame resistance qualities than polyester fibers. In light of PLA's unique chemical and physical properties, as well as seven other public comments, including the petitioner's, that supported creating a separate category in Rule 7 for PLA fiber, the Commission has determined not to amend the Rule to broaden the current definition for polyester in section 7(c) of the Rule to include PLA fiber.

With respect to the proposed name ''synterra,'' AFMA commented that as a result of two other commercial names now in use, consumer confusion could occur if the Commission adopted the proposed name. AFMA pointed out that ''sontara'' and ''sensura'' are trade names currently used by DuPont and Wellman Fibers, respectively, that apply to fibers, fabrics, and end-product uses similar to the anticipated uses for PLA fiber. The EC also commented that the proposed name, ''synterra,'' lacks sufficient reference to the chemical composition or physical properties of the fiber, and gives the impression of being a commercial trade name.

Finally, with respect to the new generic fiber definition, AFMA commented that the definition established by the Commission should be limited to a description of the fiber's chemical composition and should not include the method of manufacture.

---

[3] The Commission first announced these criteria on December 11, 1973 (38 FR 34112), and later clarified and reaffirmed them on December 6, 1995 (60 FR 62352), May 23, 1997 (62 FR 28342), and January 6, 1998 (63 FR 447 and 63 FR 449).

[4] 65 FR 69486, at 69487–69491 (Nov. 17, 2000). For brevity's sake, the Commission is providing a simplified description of the fiber in this notice, and refers those who wish to see detailed technical information about the fiber to the earlier description in the NPR.

[5] (1) American Fiber Manufacturers Association, Inc. (''AFMA''); (2) Dystar UK Ltd; (3) Keller and Heckman LLP on behalf of Cargill Dow; (4) National Corn Growers Association; (5) Interface Research Corporation; (6) Woolmark Company; (7) Finnish Standards Association (''FSA''); and (8) European Commission (''EC'').

[6] Cargill Dow's comment provides the Commission with the results of the consumer focus group research it sponsored. The report demonstrated that the focus group participants believed it would be most appropriate to place PLA in a separate fiber category.

[7] 65 FR 69486 (Nov. 17, 2000).

3. Discussion of the Three Criteria for Granting New Generic Names

a. Distinctive Chemical Composition and Physical Properties of Importance to the Public

The materials Cargill Dow submitted show that PLA fiber is based upon a distinctive chemical structure that is not encompassed by any existing definition in Rule 7. PLA's distinctive chemical structure results in a fiber that exhibits: low moisture absorption and high wicking, low flammability, high resistance to ultra violet light, a low index of refraction, and stability with respect to laundering and dry cleaning. In addition, the fiber comes from a renewable resource base. These properties are very important to those members of the general public who, for example, desire sports or performance apparel that is water-resistant and washable, or desire furnishings with low flammability. Thus, Cargill Dow's application meets this first criterion.

b. Active Commercial Use

Cargill Dow's petition stated that fibers produced from PLA have been made into finished goods that are ready to commercialize, and several are in test markets. When it filed its petition, Cargill Dow was in the process of building a plant in Blair, Nebraska, capable of producing approximately 30 million pounds per year of PLA. Counsel for Cargill Dow has informed Commission staff that the plant soon will be operational. Such a level of production for distribution satisfies this second criterion.

c. Importance to the Consuming Public

The Commission agrees with Cargill Dow that the granting of a generic name to describe PLA is of importance to the general public, and not just a few knowledgeable professionals such as purchasing officers for large government agencies. A new generic name will enable consumers to identify textile fiber products containing PLA (such as sports and performance apparel) that exhibit significant water-resistance, softer feel or ''hand,'' elasticity, shape retention, and improved comfort. Thus, Cargill Dow's application satisfies this third criterion.

4. Conclusion

Based on the foregoing, the Commission finds that Cargill Dow's fiber, PLA, is of a distinctive chemical composition not encompassed by any of the Textile Rules' existing generic definitions for manufactured fibers, that its physical properties are important to the public, that the fiber is in active commercial use, and that the granting of a new generic name and definition is important to the consuming public at large.

In light of the comments it received, the Commission has determined to adopt the generic name ''PLA'' to identify Cargill Dow's new manufactured fiber. The name ''PLA'' is used throughout Cargill Dow's application to identify its Natureworks fiber, and there is a precedent in the Rule, namely ''PBI,'' for adopting an acronym as a generic fiber name (16 CFR 303.7(u)). In addition, the Commission is not aware of any other aliphatic hydroxycarboxylic acid derived polymer currently being used to manufacture textile fibers. Accordingly, to avoid consumer confusion, and in the absence of any other suggested generic fiber names from the commenters or the petitioner, the Commission has determined to designate the generic name ''PLA'' for Cargill Dow's Natureworks fiber.

Further, the Commission agrees that it would be inappropriate to include methods of manufacture in the new generic fiber definition of PLA. There is no precedent for doing so in section 303.7 of the Rule, and, in the Commission's view, including methods of manufacture in the generic fiber definition would unduly limit industry research and innovation. Therefore, as a logical outgrowth of the fiber definition proposed in the NPR, the Commission has determined to define PLA generically in terms of its chemical composition.

Accordingly, in light of the materials and information submitted by Cargill Dow, as well as the public comments received during this proceeding, the Commission amends Rule 7 of the Textile Rules by adding the following new name and definition for Cargill Dow's fiber: PLA. A manufactured fiber in which the fiber-forming substance is composed of at least 85% by weight of lactic acid ester units derived from naturally occurring sugars.[8]

III. Effective Date

The Commission is making the amendments effective on February 1, 2002, as permitted by 5 U.S.C. 553(d), because the amendments do not create new obligations under the Rule; rather, they merely create a fiber name and definition that the public may use to comply with the Rule.

[8] The Commission notes that the definition of PLA it is adopting is consistent in form with, for example, the definition of Azlon, which is defined as a manufactured fiber in which the fiber-forming substance is composed of any regenerated naturally occurring proteins (16 CFR 303.7(g)).

IV. Regulatory Flexibility Act

In the NPR, the Commission tentatively concluded that the provisions of the Regulatory Flexibility Act relating to an initial regulatory analysis, 5 U.S.C. 603–604, did not apply to the proposal because the amendments, if promulgated, would not have a significant economic impact on a substantial number of small entities. The Commission believed that the proposed amendments would impose no additional obligations, penalties, or costs. The amendments simply would allow covered companies to use a new generic name for a new fiber that may not appropriately fit within current generic names and definitions, and would impose no additional labeling requirements. To ensure, however, that no substantial economic impact was overlooked, the Commission solicited public comment in the NPR on the effects of the proposed amendments on costs, profits, competitiveness of, and employment in small entities. 65 FR 69486, at 69491 (Nov. 17, 2000).

No comments were received on this issue. Accordingly, the Commission hereby certifies, pursuant to the Regulatory Flexibility Act, 5 U.S.C. 605(b), that the amendments promulgated today will not have a significant economic impact on a substantial number of small entities.

V. Paperwork Reduction Act

These amendments do not constitute ''collection[s] of information'' under the Paperwork Reduction Act of 1995, Pub. L. 104–13, 109 Stat. 163, 44 U.S.C. Chapter 35 (as amended), and its implementing regulations, 5 CFR 1320 *et seq.* Those procedures for establishing generic names that do constitute collections of information, 16 CFR 303.8, have been submitted to OMB, which has approved them and assigned them control number 3084–0101.

List of Subjects in 16 CFR Part 303

Labeling, Textile, Trade practices.

VI. Text of Amendments

For reasons set forth in the preamble, 16 CFR Part 303 is amended as follows:

PART 303—RULES AND REGULATIONS UNDER THE TEXTILE FIBER PRODUCTS IDENTIFICATION ACT

1. The authority citation for part 303 continues to read as follows:

Authority: Sec. 7(c) of the Textile Fiber Products Identification Act (15 U.S.C. 70e(c)).

2. In § 303.7, paragraph (y) is added, to read as follows:

§ 303.7 Generic names and definitions for manufactured fibers.

* * * * *

(y) *PLA.* A manufactured fiber in which the fiber-forming substance is composed of at least 85% by weight of lactic acid ester units derived from naturally occurring sugars.

By direction of the Commission.

Donald S. Clark,

Secretary.

[FR Doc. 02–2434 Filed 1–31–02; 8:45 am]

BILLING CODE 6750–01–P

DEPARTMENT OF HEALTH AND HUMAN SERVICES

Food and Drug Administration

21 CFR Parts 10, 201, 250, 290, 310, 329, 341, 361, 369, 606, and 610

[Docket No. 00N–0086]

Amendment of Regulations Regarding Certain Label Statements on Prescription Drugs

AGENCY: Food and Drug Administration, HHS.

ACTION: Final rule.

SUMMARY: The Food and Drug Administration (FDA) is amending its regulations concerning certain statements that have been required on the labels of prescription drugs generally and on certain narcotic or hypnotic (habit-forming) drugs. The agency is taking this action in accordance with provisions of the Food and Drug Administration Modernization Act of 1997 (Modernization Act).

DATES: This rule is effective April 2, 2002.

FOR FURTHER INFORMATION CONTACT:

For information regarding human drugs: Jerry Phillips, Center for Drug Evaluation and Research (HFD–400), Food and Drug Administration, 5600 Fishers Lane, Rockville, MD 20857, 301–827–3246.

For information regarding biologics: Robert A. Yetter, Center for Biologics Evaluation and Research (HFM–10), Food and Drug Administration, 1401 Rockville Pike, Rockville, MD 20852–1448, 301–827–0373.

SUPPLEMENTARY INFORMATION:

I. Background

On November 21, 1997, the Modernization Act (Public Law 105–115) was signed into law. Section 126 of the Modernization Act amended section 503(b)(4) of the Federal Food, Drug, and Cosmetic Act (the act) (21 U.S.C. 353(b)(4)) to require, at a minimum, that, prior to dispensing, the label of prescription drugs bear the symbol ''Rx only'' instead of the statement ''Caution: Federal law prohibits dispensing without prescription.'' The new label statement may be printed as either ''Rx only'' or ''℞ only.'' Section 126 of the Modernization Act also repealed section 502(d) of the act (21 U.S.C. 352(d)), which provided that a drug or device containing certain enumerated narcotic or hypnotic (habit-forming) substances or their derivatives was misbranded unless its label bore the name and quantity of the substance and the statement ''Warning—May be habit forming.'' In the **Federal Register** of April 21, 2000 (65 FR 21378), FDA proposed amending its regulations to implement these provisions of the Modernization Act.

II. Highlights of the Final Rule

The agency is finalizing without change the regulatory provisions of the proposed rule.

- The final rule amends parts 10, 201, 250, 310, 329, 361, 606, and 610 (21 CFR parts 10, 201, 250, 310, 329, 361, 606, and 610) by removing the requirement that prescription drugs be labeled with ''Caution: Federal law prohibits dispensing without prescription'' and adding in its place a requirement that prescription drugs be labeled with ''Rx only'' or ''℞ only.''
- The final rule amends parts 201 and 369 (21 CFR part 369) by removing the requirement that certain habit-forming drugs bear the statement ''Warning—May be habit forming.''
- The final rule removes part 329, Habit-Forming Drugs.
- The final rule amends part 290 (21 CFR part 290) by adding new §§ 290.1 and 290.2. Section 290.1 is being added to make clear the agency's determination that a drug that is a controlled substance listed in schedule II, III, IV, or V of the Federal Controlled Substances Act (CSA) or implementing regulations must, unless otherwise determined by the agency, be dispensed by prescription only as required by section 503(b)(1) of the act. Section 290.2 retains the exemption from the prescription-dispensing requirement in § 329.20 for small amounts of codeine in combination with other nonnarcotic active medicinal ingredients.

III. Comments on the Proposed Rule

The agency received three comments from pharmaceutical companies and one comment from an association of pharmacists.

(1). All four comments concerned the appearance of the ''Rx only'' statement on the label. In the proposed rule, the ℞ symbol appeared in bold because of type-setting limitations. FDA did not want to create the impression that it was proposing to require the ℞ symbol to appear in bold. In an attempt at clarification, a footnote was included in the proposed rule stating: ''The ℞ symbol appears in bold in this document because of type-setting limitations, however, it should not be bolded when used on the product's label'' (65 FR 21378). Two comments objected to this apparent prohibition against the use of bolding, noting that the implementing guidance discussed in section IV of this document did not prescribe whether or not the ℞ symbol or the Rx only statement generally should appear in bold. FDA agrees with these comments. The ℞ symbol and the Rx only statement may be printed in bold or in regular type.

(2). In the implementing guidance, FDA stated: ''The statement should be prominent and conspicuous, as is required by section 502(c) of the Act and 21 CFR 201.15.'' One comment suggested that manufacturers should not be permitted to determine what placement on the label is prominent and conspicuous. The comment asked that FDA require that the Rx only statement appear on the main part of the label and also that FDA establish a minimum font size for the Rx only statement relative to the other text on the label.

FDA declines to adopt this suggestion. Section 502(c) of the act provides that a drug or device is misbranded if a label statement required by the act or FDA regulations * * * ''is not prominently placed thereon with such conspicuousness (as compared with other words, statements, designs, or devices, in the labeling) and in such terms as to render it likely to be read and understood by the ordinary individual under customary conditions of purchase and use.'' FDA's regulation at § 201.15 elaborates on specific factors that could render a label statement not prominent and conspicuous. This regulation applies to the Rx only statement, and thus requirements specific to the Rx only statement are unnecessary.

(3). One comment objected to the agency's position, expressed in the implementing guidance, that manufacturers are not prohibited from using the ''Warning—May be habit forming'' statement. The Modernization Act removed the requirement that the labels of habit-forming drugs bear this statement, but did not prohibit use of the statement. However, as explained in

the guidance, FDA believes that the habit-forming characteristics of a drug product should be adequately described in the ''Drug Abuse and Dependence'' section of the package insert and that further labeled warnings are not necessary.

IV. Implementation

A guidance for industry entitled ''Implementation of Section 126 of the Food and Drug Administration Modernization Act of 1997—Elimination of Certain Labeling Requirements'' (63 FR 39100, July 21, 1998) is available on the Internet at http://www.fda. gov/cder/guidance/index.htm or http://www.fda.gov/cber/guidelines.htm. The guidance indicates that, for the time periods and under the circumstances stated below, in the exercise of its enforcement discretion, FDA does not intend to object if a sponsor does not comply with the new labeling requirements of section 126 of the Modernization Act. The guidance advises that FDA does not intend to object if sponsors of certain currently approved products implement the new requirements of section 126 of the Modernization Act at the time of the next revision of their labels, or by February 19, 2003, whichever comes first, and report these minor changes in the next annual report. For pending (unapproved) full or abbreviated applications received by the agency prior to February 19, 1998, sponsors should comply with the new labeling requirements by the time of the next revision of their labels or by February 19, 2003, whichever comes first. The guidance also advises that full or abbreviated applications received by FDA after February 19, 1998, should provide labels and labeling in compliance with the new labeling requirements.

V. Environmental Impact

The agency has determined under 21 CFR 25.30(k) that this action is of a type that does not individually or cumulatively have a significant effect on the human environment. Therefore, neither an environmental assessment nor an environmental impact statement is required.

VI. Analysis of Impacts

FDA has examined the impacts of the final rule under Executive Order 12866 and the Regulatory Flexibility Act (5 U.S.C. 601–612). Executive Order 12866 directs agencies to assess all costs and benefits of available regulatory alternatives and, when regulation is necessary, to select regulatory approaches that maximize net benefits (including potential economic, environmental, public health and safety, and other advantages; distributive impacts; and equity). The agency believes that this final rule is consistent with the regulatory philosophy and principles identified in the Executive order. As described in section IV of this document, the agency's guidance document explains that FDA will exercise its enforcement discretion in a manner that will permit companies to implement the required label changes at the time of the next revision of their labels, or by February 19, 2003, whichever comes first. Because almost all labels would typically be reprinted within this timeframe, this enforcement strategy will eliminate any significant costs that would otherwise be associated with the rule. As a result, the final rule is not a significant regulatory action as defined by the Executive order.

The Regulatory Flexibility Act requires agencies to analyze regulatory options to minimize any significant impact of a rule on a substantial number of small entities. The agency certifies that the final rule would not have a significant impact on a substantial number of small entities because the lengthy implementation period will allow companies to make the necessary label changes during the normal course of business. Therefore, under the Regulatory Flexibility Act, no further analysis is required. Section 202(a) of the Unfunded Mandates Reform Act (Public Law 104–4) requires that agencies prepare an assessment of anticipated costs and benefits before proposing any rule that may result in an expenditure by State, local, and tribal governments, in the aggregate, or by the private sector, of $100 million or more in any one year (adjusted annually for inflation). Because this rule does not impose any mandates on State, local, or tribal governments, or the private sector that will result in an expenditure of $100 million or more in any one year, FDA is not required to perform a cost-benefit analysis under the Unfunded Mandates Reform Act.

VII. Paperwork Reduction Act of 1995

FDA concludes that this final rule does not require information collections subject to review by the Office of Management and Budget (OMB) under the Paperwork Reduction Act of 1995 (the PRA) (Public Law 104–13).

FDA is amending its labeling regulations by removing the requirement that prescription drugs be labeled with ''Caution: Federal law prohibits dispensing without prescription'' and adding a requirement that prescription drugs be labeled with ''Rx only'' or ''℞ only.'' This labeling statement is not subject to review by OMB because it is ''originally supplied by the Federal Government to the recipient for the purpose of disclosure to the public'' (5 CFR 1320.3(c)(2)) and therefore does not constitute a ''collection of information'' under the PRA.

VIII. Executive Order 13132: Federalism

FDA has analyzed this final rule in accordance with Executive Order 13132: Federalism. Executive Order 13132 requires Federal agencies to carefully examine actions to determine if they contain policies that have federalism implications or that preempt existing State law. As defined in the Order, ''policies that have federalism implications'' refers to regulations, legislative comments or final legislation, and other policy statements or actions that have substantial direct effects on the States, on the relationship between the National Government and the States or on the distribution of power and responsibilities among the various levels of government.

This final rule revises FDA labeling regulations as required by the Modernization Act. Because enforcement of these labeling provisions is a Federal responsibility, there should be little, if any, impact from this rule on the States, on the relationship between the National Government and the States, or on the distribution of power and responsibilities among the various levels of government. In addition, FDA does not believe that this final rule preempts any existing State law.

Accordingly, FDA has determined that this final rule does not contain policies that have federalism implications.

List of Subjects

21 CFR Part 10

Administrative practice and procedure, News media.

21 CFR Part 201

Drugs, Labeling, Reporting and recordkeeping requirements.

21 CFR Part 250

Drugs.

21 CFR Parts 290 and 329

Drugs, Labeling.

21 CFR Part 310

Administrative practice and procedure, Drugs, Labeling, Medical devices, Reporting and recordkeeping requirements.

21 CFR Part 341

Labeling, Over-the-counter drugs.

21 CFR Part 361

Medical research, Prescription drugs, Radiation protection.

21 CFR Part 369

Labeling, Medical devices, Over-the-counter drugs.

21 CFR Part 606

Blood, Labeling, Laboratories, Reporting and recordkeeping requirements.

21 CFR Part 610

Biologics, Labeling, Reporting and recordkeeping requirements.

Therefore, under the Federal Food, Drug, and Cosmetic Act, the Public Health Service Act, and the Food and Drug Administration Modernization Act, and under authority delegated to the Commissioner of Food and Drugs, chapter I of Title 21 is amended as follows:

PART 10—ADMINISTRATIVE PRACTICES AND PROCEDURES

1. The authority citation for 21 CFR part 10 continues to read as follows:

Authority: 5 U.S.C. 551–558, 701–706; 15 U.S.C. 1451–1461; 21 U.S.C. 141–149, 321–397, 467f, 679, 821, 1034; 28 U.S.C. 2112; 42 U.S.C. 201, 262, 263b, 264.

§ 10.50 [Amended]

2. Section 10.50 *Promulgation of regulations and orders after an opportunity for a formal evidentiary public hearing* is amended by removing and reserving paragraph (c)(7).

PART 201—LABELING

3. The authority citation for 21 CFR part 201 continues to read as follows:

Authority: 21 U.S.C. 321, 331, 351, 352, 353, 355, 358, 360, 360b, 360gg–360ss, 371, 374, 379e; 42 U.S.C. 216, 241, 262, 264.

§ 201.10 [Amended]

4. Section 201.10 *Drugs; statement of ingredients* is amended in paragraph (a) by removing the phrase ''as 'Warning—May be habit forming' ''.

5. Section 201.16 is revised to read as follows:

§ 201.16 Drugs; Spanish-language version of certain required statements.

An increasing number of medications restricted to prescription use only are being labeled solely in Spanish for distribution in the Commonwealth of Puerto Rico where Spanish is the predominant language. Such labeling is authorized under § 201.15(c). One required warning, the wording of which is fixed by law in the English language, could be translated in various ways, from literal translation to loose interpretation. The statutory nature of this warning requires that the translation convey the meaning properly to avoid confusion and dilution of the purpose of the warning. Section 503(b)(4) of the Federal Food, Drug, and Cosmetic Act requires, at a minimum, that the label bear the statement ''Rx only.'' The Spanish-language version of this must be ''Solamente Rx''.

§ 201.100 [Amended]

6. Section 201.100 *Prescription drugs for human use* is amended in paragraph (b)(1) by removing the phrase '' 'Caution: Federal law prohibits dispensing without prescription' '' and by adding in its place the phrase '' 'Rx only' ''.

§ 201.120 [Amended]

7. Section 201.120 *Prescription chemicals and other prescription components* is amended in paragraph (b)(2) by removing the phrase '' 'Caution: Federal law prohibits dispensing without prescription' '' and by adding in its place the phrase '' 'Rx only' ''.

§ 201.122 [Amended]

8. Section 201.122 *Drugs for processing, repacking, or manufacturing* is amended in the first sentence of the introductory text by removing the phrase '' 'Caution: Federal law prohibits dispensing without prescription' '' and by adding in its place the phrase '' 'Rx only' ''.

§ 201.306 [Amended]

9. Section 201.306 *Potassium salt preparations intended for oral ingestion by man* is amended in paragraph (b)(1) by removing the word ''caution''.

PART 250—SPECIAL REQUIREMENTS FOR SPECIFIC HUMAN DRUGS

10. The authority citation for 21 CFR part 250 continues to read as follows:

Authority: 21 U.S.C. 321, 336, 342, 352, 353, 355, 361(a), 362(a) and (c), 371, 375(b).

§ 250.100 [Amended]

11. Section 250.100 *Amyl nitrate inhalant as a prescription drug for human use* is amended in paragraph (b) by removing the phrase ''legend 'Caution: Federal law prohibits dispensing without prescription.' '' and by adding in its place the phrase ''statement 'Rx only.' ''.

§ 250.101 [Amended]

12. Section 250.101 *Amphetamine and methamphetamine inhalers regarded as prescription drugs* is amended in paragraph (b) by removing the phrase ''legend 'Caution: Federal law prohibits dispensing without prescription.' '' and by adding in its place the phrase ''statement 'Rx only.' ''.

§ 250.105 [Amended]

13. Section 250.105 *Gelsemium-containing preparations regarded as prescription drugs* is amended in the last sentence by removing the phrase '' 'Caution: Federal law prohibits dispensing without prescription.' '' and by adding in its place the phrase '' 'Rx only.' ''.

§ 250.108 [Amended]

14. Section 250.108 *Potassium permanganate preparations as prescription drugs* is amended in paragraph (c)(1) by removing the phrase ''legend, 'Caution: Federal law prohibits dispensing without prescription.' '' and by adding in its place the phrase ''statement 'Rx only.' '' and in paragraph (c)(2) by removing the phrase '', 'Caution: Federal law prohibits dispensing without prescription.' '' and by adding in its place the phrase '' 'Rx only.' ''.

§ 250.201 [Amended]

15. Section 250.201 *Preparations for the treatment of pernicious anemia* is amended in paragraph (d) by removing the phrase ''legend 'Caution—Federal law prohibits dispensing without prescription.' '' and by adding in its place the phrase ''statement 'Rx only.' ''.

§ 250.250 [Amended]

16. Section 250.250 *Hexachlorophene, as a component of drug and cosmetic products* is amended in the last sentence of paragraph (c)(1) by removing the phrase ''legend 'Caution: Federal law prohibits dispensing without a prescription,' '' and by adding in its place the phrase ''statement 'Rx only,' '' and in paragraph (c)(4)(i) by removing the phrase ''prescription legend'' and by adding in its place the phrase ''statement 'Rx only' ''.

PART 290—CONTROLLED DRUGS

17. The authority citation for 21 CFR part 290 continues to read as follows:

Authority: 21 U.S.C. 352, 353, 355, 371.

18. Section 290.1 is added to subpart A to read as follows:

§ 290.1 Controlled substances.

Any drug that is a controlled substance listed in schedule II, III, IV, or V of the Federal Controlled Substances Act or implementing regulations must be dispensed by prescription only as required by section 503(b)(1) of the

Federal Food, Drug, and Cosmetic Act unless specifically exempted in § 290.2.

19. Section 290.2 is added to subpart A to read as follows:

§ 290.2 Exemption from prescription requirements.

The prescription-dispensing requirements of section 503(b)(1) of the Federal Food, Drug, and Cosmetic Act are not necessary for the protection of the public health with respect to a compound, mixture, or preparation containing not more than 200 milligrams of codeine per 100 milliliters or per 100 grams that also includes one or more nonnarcotic active medicinal ingredients in sufficient proportion to confer upon the compound, mixture, or preparation valuable medicinal qualities other than those possessed by codeine alone.

PART 310—NEW DRUGS

20. The authority citation for 21 CFR part 310 continues to read as follows:

Authority: 21 U.S.C. 321, 331, 351, 352, 353, 355, 360b–360f, 360j, 361(a), 371, 374, 375, 379e; 42 U.S.C. 216, 241, 242(a), 262, 263b–263n.

§ 310.103 [Amended]

21. Section 310.103 *New drug substances intended for hypersensitivity testing* is amended in paragraph (a)(3)(i) by removing the phrase '' 'Caution: Federal law prohibits dispensing without a prescription' '' and by adding in its place the phrase '' 'Rx only' ''.

PART 329—HABIT FORMING DRUGS

22. Part 329 is removed.

PART 341—COLD, COUGH, ALLERGY, BRONCHODILATOR, AND ANTIASTHMATIC DRUG PRODUCTS FOR OVER-THE-COUNTER HUMAN USE

23. The authority citation for 21 CFR part 341 continues to read as follows:

Authority: 21 U.S.C. 321, 351, 352, 353, 355, 360, 371.

§ 341.14 [Amended]

24. Section 341.14 *Antitussive active ingredients* is amended in paragraph (a)(2) by removing ''§§ 329.20(a) and 341.40'' and by adding in its place ''§ 290.2''.

PART 361—PRESCRIPTION DRUGS FOR HUMAN USE GENERALLY RECOGNIZED AS SAFE AND EFFECTIVE AND NOT MISBRANDED: DRUGS USED IN RESEARCH

25. The authority citation for 21 CFR part 361 continues to read as follows:

Authority: 21 U.S.C. 321, 351, 352, 353, 355, 371; 42 U.S.C. 262.

§ 361.1 [Amended]

26. Section 361.1 *Radioactive drugs for certain research uses* is amended in paragraph (f)(1) by removing the phrase '' 'Caution: Federal law prohibits dispensing without prescription' '' and by adding in its place the phrase '' 'Rx only' ''.

PART 369—INTERPRETATIVE STATEMENTS RE WARNINGS ON DRUGS AND DEVICES FOR OVER-THE-COUNTER SALE

27. The authority citation for 21 CFR part 369 continues to read as follows:

Authority: 21 U.S.C. 321, 331, 351, 352, 353, 355, 371.

§ 369.22 [Removed]

28. Section 369.22 is removed.

PART 606—CURRENT GOOD MANUFACTURING PRACTICE FOR BLOOD AND BLOOD COMPONENTS

29. The authority citation for 21 CFR part 606 continues to read as follows:

Authority: 21 U.S.C. 321, 331, 351, 352, 355, 360, 360j, 371, 374; 42 U.S.C. 216, 262, 263a, 264.

30. Section 606.121 is amended by revising paragraph (c)(8)(i) to read as follows:

§ 606.121 Container label.

* * * * *

(c) * * *

(8) * * *

(i) ''Rx only.''

* * * * *

PART 610—GENERAL BIOLOGICAL PRODUCTS STANDARDS

31. The authority citation for 21 CFR part 610 continues to read as follows:

Authority: 21 U.S.C. 321, 351, 352, 353, 355, 360, 371; 42 U.S.C. 216, 262, 263, 263a, 264.

§ 610.60 [Amended]

32. Section 610.60 *Container label* is amended in paragraph (a)(6) by removing the phrase '' 'Caution: Federal law prohibits dispensing without prescription,' '' and by adding in its place the phrase '' 'Rx only' ''.

§ 610.61 [Amended]

33. Section 610.61 *Package label* is amended in paragraph (s) by removing the phrase '' 'Caution: Federal law prohibits dispensing without prescription,' '' and by adding in its place the phrase '' 'Rx only' ''.

Dated: January 28, 2002.

Margaret M. Dotzel,

Associate Commissioner for Policy.

[FR Doc. 02–2548 Filed 1–31–02; 8:45 am]

BILLING CODE 4160–01–S

DEPARTMENT OF THE TREASURY

Internal Revenue Service

26 CFR Part 1

[TD 8982]

RIN 1545–AY19

Definition of Disqualified Person

AGENCY: Internal Revenue Service (IRS), Treasury.

ACTION: Final regulations.

SUMMARY: This document contains final regulations narrowing the definition of the term disqualified person for section 1031 like-kind exchanges. The amendments in the regulations are in response to recent changes in the federal banking law, especially the repeal of section 20 of the Banking Act of 1933 (commonly referred to as the Glass-Steagall Act). The regulations will affect the eligibility of certain persons to serve as escrow holders of qualified escrow accounts, trustees of qualified trusts, and qualified intermediaries.

DATES: *Effective Date:* These regulations are effective February 1, 2002.

Dates of Applicability: These regulations apply to transfers of property made by a taxpayer on or after January 17, 2001.

FOR FURTHER INFORMATION CONTACT: Brendan O'Hara, (202) 622–4920 (not a toll-free number).

SUPPLEMENTARY INFORMATION:

Background

This document contains amendments to the Income Tax Regulations (26 CFR Part 1) under § 1.1031(k)–1. On January 17, 2001, the IRS and Treasury Department published in the **Federal Register** a notice of proposed rulemaking under section 1031 (66 FR 3924). The notice proposed to amend § 1.1031(k)–1(k) by narrowing the definition of the term *disqualified person.* Comments responding to the notice were received, and a public hearing was held on June 5, 2001. After considering the comments received in response to the notice of proposed rulemaking and the statements made at the public hearing, the proposed regulations are adopted as revised by this Treasury decision. The comments and revisions are discussed below.

Explanation of Provisions

Under section 1031 and the regulations thereunder, taxpayers may use a qualified escrow account, qualified trust, or qualified intermediary to facilitate a like-kind exchange. A requirement common to qualified escrow accounts, qualified trusts, and qualified intermediaries is that the escrow holder, trustee, or intermediary may not be the taxpayer or a disqualified person.

Section 1.1031(k)–1(k) defines a disqualified person to include an agent of the taxpayer at the time of the transaction. An agent includes a person that has acted as the taxpayer's employee, attorney, accountant, investment banker or broker, or real estate agent or broker within two years of the taxpayer's transfer of relinquished property. However, in determining whether a person is a disqualified person, services provided by such person for the taxpayer with respect to section 1031 exchanges of property and routine financial, title insurance, escrow, or trust services provided to the taxpayer by a financial institution, title insurance company, or escrow company are not taken into account. Under § 1.1031(k)–1(k)(4), a person that is related to a disqualified person, determined by using the attribution rules of sections 267(b) and 707(b), but substituting 10 percent for 50 percent, is also considered a disqualified person.

As a consequence of the Gramm-Leach-Bliley Act, Public Law 106–102 (Nov. 12, 1999), 113 Stat. 1341, and other changes in policy by the Federal Reserve System in recent years, many banks are, or are in the process of becoming, members of controlled groups that include investment banking and brokerage firms. These new relationships between banks and investment banking and brokerage firms may make it difficult for some banks to continue their traditional practices of providing qualified escrow, qualified trust, and qualified intermediary services without violating the disqualified person rules. To allow banks to continue to perform these services, the proposed regulations provide that a bank that is a member of a controlled group that includes an investment banking or brokerage firm as a member will not be a disqualified person merely because the related investment banking or brokerage firm provided services to an exchange customer within a two-year period ending on the date of the transfer of the relinquished property by that customer.

Treasury and the IRS received several comments on the proposed regulations. Some commentators argued that the proposed exception to the disqualified person rules would not fulfill its intended purpose, because most banks use non-bank subsidiaries or affiliates to serve as escrow holders of qualified escrow accounts, trustees of qualified trusts, or qualified intermediaries. These commentators recommended that the proposed exception be extended to apply to subsidiaries and affiliates of banks. In response to these comments, the final regulations extend the proposed exception to bank affiliates as well as banks. For this purpose, a bank affiliate is a non-bank corporation whose principal activity is rendering services to facilitate exchanges of property intended to qualify for nonrecognition of gain under section 1031 and all of whose outstanding stock is owned by either a bank or a bank holding company (within the meaning of section 2(a) of the Bank Holding Company Act of 1956, 12 U.S.C. 1841(a)).

Some commentators noted the discrepancy between the effective date set forth in the text of the proposed regulations (i.e., applicable to transfers of relinquished property on or after the date of the final regulations) and the effective date set forth in the Preamble to those regulations (i.e., applicable to transfers of relinquished property on or after January 17, 2001). In response to the comments, the final regulations adopt the earlier of the two effective dates, and thus apply in the case of transfers of relinquished property made by a taxpayer on or after January 17, 2001.

Other commentators expressed opposition to the proposed regulations, requesting that the regulations be withdrawn. The commentators maintained that the existing regulations provide adequate exceptions to the definition of disqualified person, and that an exception for the banking industry will erode the integrity and purpose of the disqualified person concept.

Treasury and the IRS continue to believe that the amendment to the regulations is appropriate and necessary for the reasons articulated in the Preamble to the proposed regulations. Banks and their affiliates are closely regulated institutions that have historically acted as neutral and independent holders of funds. Treasury and the IRS do not believe that recent changes to federal banking laws are likely to impinge on this role to any significant degree.

Finally, one commentator requested that the final regulations include the exception from the disqualified person rule set forth in section 3.03 of Rev. Proc. 2000–37 (2000–40 I.R.B. 308). Rev. Proc. 2000–37, published to facilitate reverse like-kind exchanges, provides a safe harbor for the qualification under section 1031 of certain arrangements between taxpayers and exchange accommodation titleholders and provides for the treatment of the exchange accommodation titleholder as the beneficial owner of the property for federal income tax purposes. Section 3.03 of the revenue procedure provides that services performed for the taxpayer in connection with a person's role as the exchange accommodation titleholder are not taken into account in determining whether that person or a related person is a disqualified person. Treasury and the IRS do not believe that this rule needs to be restated in these regulations. Consequently, the final regulations do not include the exception from the disqualified person rule set forth in Rev. Proc. 2000–37.

Special Analyses

It has been determined that this Treasury decision is not a significant regulatory action as defined in Executive Order 12866. Therefore, a regulatory assessment is not required. It has also been determined that section 553(b) of the Administrative Procedure Act (5 U.S.C. chapter 5) does not apply to these regulations, and because these regulations do not impose a collection of information on small entities, the Regulatory Flexibility Act (5 U.S.C. chapter 6) does not apply. Pursuant to section 7805(f) of the Internal Revenue Code, the notice of proposed rulemaking preceding these regulations was submitted to the Chief Counsel for Advocacy of the Small Business Administration for comment on its impact on small business.

Drafting Information

The principal author of the regulations is Brendan O'Hara, Office of Associate Chief Counsel (Income Tax and Accounting). However, other personnel from the IRS and Treasury Department participated in the development of the regulations.

List of Subjects in 26 CFR Part 1

Income taxes, Reporting and recordkeeping requirements.

Adoption of Amendments to the Regulations

Accordingly, 26 CFR part 1 is amended as follows:

PART 1—INCOME TAXES

Paragraph 1. The authority citation for part 1 continues to read in part as follows:

Authority: 26 U.S.C. 7805 * * *

Par 2. In § 1.1031(k)–1, paragraph (k)(4) is revised to read as follows:

§ 1.1031(k)–1 Treatment of deferred exchanges.

* * * * *

(k) * * *

(4)(i) Except as provided in paragraph (k)(4)(ii) of this section, the person and a person described in paragraph (k)(2) of this section bear a relationship described in either section 267(b) or 707(b) (determined by substituting in each section ''10 percent'' for ''50 percent'' each place it appears).

(ii) In the case of a transfer of relinquished property made by a taxpayer on or after January 17, 2001, paragraph (k)(4)(i) of this section does not apply to a bank (as defined in section 581) or a bank affiliate if, but for this paragraph (k)(4)(ii), the bank or bank affiliate would be a disqualified person under paragraph (k)(4)(i) of this section solely because it is a member of the same controlled group (as determined under section 267(f)(1), substituting ''10 percent'' for ''50 percent' where it appears) as a person that has provided investment banking or brokerage services to the taxpayer within the 2-year period described in paragraph (k)(2) of this section. For purposes of this paragraph (k)(4)(ii), a bank affiliate is a corporation whose principal activity is rendering services to facilitate exchanges of property intended to qualify for nonrecognition of gain under section 1031 and all of whose stock is owned by either a bank or a bank holding company (within the meaning of section 2(a) of the Bank Holding Company Act of 1956 (12 U.S.C. 1841(a)).

* * * * *

Approved: January 25, 2002.

Robert E. Wenzel,

Deputy Commissioner of Internal Revenue.

Mark Weinberger,

Assistant Secretary of the Treasury.

[FR Doc. 02–2532 Filed 1–31–02; 8:45 am]

BILLING CODE 4830–01–P

DEPARTMENT OF TRANSPORTATION

Coast Guard

33 CFR Part 117

[CGD08–02–001]

RIN 2115–AE47

Drawbridge Operating Regulation; Mississippi River, Iowa and Illinois

AGENCY: Coast Guard, DOT.

ACTION: Temporary deviation.

SUMMARY: The Commander, Eighth Coast Guard District has authorized a temporary deviation from the regulation governing the Sabula Railroad Drawbridge, Mile 535.0, Upper Mississippi River at Sabula, Iowa. This deviation allows the drawbridge to remain closed to navigation for 50 days from 12:01 a.m., January 20, 2002, until 12:01 a.m., March 11, 2002. The drawbridge shall open on signal if at least twenty-four (24) hours advance notice is given.

DATES: This temporary deviation is effective from 12:01 a.m., January 20, 2002, until 12:01 a.m., March 11, 2002.

ADDRESSES: Unless otherwise indicated, documents referred to in this notice are available for inspection or copying at the office of the Eighth Coast Guard District, Bridge Administration Branch, Commander (obr), 1222 Spruce Street, St. Louis, MO 63103–2832. The Bridge Administration Branch maintains the public docket for this temporary deviation.

FOR FUTHER INFORMATION CONTACT: Roger K. Wiebusch, Bridge Administrator, at (314) 539–3900, extension 378.

SUPPLEMENTARY INFORMATION: The I & M Rail Link Railroad requested a temporary deviation on December 20, 2001 from the drawbridge operation regulations to allow the bridge owner time for preventative maintenance. The drawbridge operation regulations require that the drawbridge open on signal.

The Sabula Railroad Drawbridge provides a vertical clearance of 18.1 feet above normal pool in the closed-to-navigation position. Navigation on the waterway consists primarily of commercial tows and recreational watercraft. This deviation has been coordinated with waterway users. There were no objections.

This deviation allows the bridge to remain closed to navigation from 12:01 a.m., January 20, 2002 to 12:01 a.m., March 11, 2002 with openings provided upon receipt of twenty-four (24) hours advance notice.

Dated: January 15, 2002.

Roy J. Casto,

Rear Admiral, U.S. Coast Guard, Commander, Eighth Coast Guard District.

[FR Doc. 02–2545 Filed 1–31–02; 8:45 am]

BILLING CODE 4910–15–U

DEPARTMENT OF TRANSPORTATION

Coast Guard

33 CFR Part 165

[CGD07–01–136]

RIN 2115–AA97

Security Zones; St. Thomas, U.S. Virgin Islands

AGENCY: Coast Guard, DOT.

ACTION: Temporary final rule.

SUMMARY: The Coast Guard is establishing temporary security zones 50 yards around all cruise ships in the Port of Charlotte Amalie, St. Thomas, USVI. These security zones are needed to protect the public and the Port of Charlotte Amalie from potential subversive acts. No person or vessel will be permitted to enter or remain in these security zones unless specifically authorized by the Captain of the Port San Juan, or his designated representative.

DATES: This regulation becomes effective at 6 p.m. on December 19, 2001 and will terminate at 11:59 p.m. on June 15, 2002.

ADDRESSES: Comments and material received from the public, as well as documents indicated in this preamble as being available in the docket, are part of [CGD07–01–136] and are available for inspection or copying at Marine Safety Office San Juan, RODVAL Bldg, San Martin St. #90 Ste 400, Guaynabo, PR 00968, between 7 a.m. and 3:30 p.m. Monday through Friday, except Federal holidays.

FOR FURTHER INFORMATION CONTACT: LCDR Robert Lefevers, Marine Safety Office San Juan, Puerto Rico, at (787) 706–2440.

SUPPLEMENTARY INFORMATION:

Regulatory Information

We did not publish a notice of proposed rulemaking (NPRM) for this regulation. Under 5 U.S.C. 553(b)(B), the Coast Guard finds that good cause exists for not publishing a NPRM. Publishing a NPRM and delaying the rule's effective date would be contrary to the public interest since immediate action is needed to protect the public, ports and waterways of the United States. The

Coast Guard will issue a broadcast notice to mariners and a Marine Safety Information Bulletin via facsimile and electronic mail to advise mariners of the restriction.

For the same reasons, under 5 U.S.C. 553(d)(3), the Coast Guard finds that good cause exists for making this rule effective less than 30 days after publication in the **Federal Register**.

Background and Purpose

Based on the September 11, 2001, terrorist attacks on the World Trade Center buildings in New York and the Pentagon in Arlington, Virginia, there is an increased risk that subversive activity could be launched by vessels or persons in close proximity to the Port of Charlotte Amalie, U.S. Virgin Islands (USVI) against cruise ships in the Port.

Due to the number of passengers onboard cruise ships while moored in the Port of Charlotte Amalie, USVI, there is a risk that they are a target for subversive activity or a terrorist attack. The Captain of the Port San Juan is reducing this risk by prohibiting all vessels from coming within 50 yards of cruise ships while entering, departing, moored at any pier, or anchored in any anchorage in the Port of Charlotte Amalie, St. Thomas, USVI unless prior authorization is given by the Captain of the Port of San Juan. These temporary security zones are activated when cruise ships pass: St. Thomas Harbor green lighted buoy #3 in approximate position 18°19′19″ North, 64°55′40″ West when entering the port using St. Thomas Channel; red buoy #2 in approximate position 18°19′15″ North, 64°55′59″ West when entering the port using East Gregorie Channel; and red lighted buoy #4 in approximate position 18°18′16″ North, 64°57′30″ West when entering the port using West Gregorie Channel. These zones are deactivated when the vessel passes any of these buoys on its departure from port. United States Coast Guard and territorial law enforcement personnel will be enforcing these security zones.

Regulatory Evaluation

This rule is not a significant regulatory action under section 3(f) of Executive Order 12866, Regulatory Planning and Review, and does not require an assessment of potential costs and benefits under section 6(a)(3) of that order. The Office of Management and Budget has not reviewed it under that order. It is not significant under the regulatory policies and procedures of the Department of Transportation (DOT) (44 FR 11040; February 26, 1979) because the zones are narrow in scope and are only in effect for limited periods of time when a cruise ship is in Port.

Small Entities

Under the Regulatory Flexibility Act (5 U.S.C. 601–612), the Coast Guard considered whether this rule would have a significant economic effect upon a substantial number of small entities. ''Small entities'' include small businesses, not-for-profit organizations that are independently owned and operated and are not dominant in their fields, and governmental jurisdictions with populations of less than 50,000.

The Coast Guard certifies under 5 U.S.C. 605(b) that this rule will not have a significant economic impact on a substantial number of small entities because the zones are narrow in scope and are only in effect for limited periods of time when a cruise ship is in Port. Moreover, vessels may be allowed to enter the zones on a case-by-case basis with the permission of the Captain of the Port of San Juan.

Assistance for Small Entities

Under section 213(a) of the Small Business Regulatory Enforcement Fairness Act of 1996 (Public Law 104–121), we offer to assist small entities in understanding the rule so that they can better evaluate its effects on them and participate in the rulemaking process. If the rule will affect your small business, organization, or government jurisdiction and you have questions concerning its provisions or options for compliance, please contact the person listed under **FOR FURTHER INFORMATION CONTACT** for assistance in understanding this rule.

Small businesses may send comments on the actions of Federal employees who enforce, or otherwise determine compliance with, Federal regulations to the Small Business and Agriculture Regulatory Enforcement Ombudsman and the Regional Small each agency's responsiveness to small business. If you wish to comment on actions by employees of the Coast Guard, call 1–888–REG–FAIR (1–888–734–3247).

Collection of Information

This rule calls for no new collection of information requirements under the Paperwork Reduction Act (44 U.S.C. 3501–3520).

Federalism

A rule has implication for federalism under Executive Order 13132, Federalism, if it has a substantial direct effect on State or local governments and would either preempt State law or impose a substantial direct cost of compliance on them. We have analyzed this rule under that Order and have determined that it does not have implications for federalism.

Unfunded Mandates Reform Act

The Unfunded Mandates Reform Act of 1995 (2 U.S.C. 1531–1538) requires Federal agencies to assess the effects of their discretionary regulatory actions. In particular, the Act addresses actions that may result in the expenditure by a State, local, or tribal government, in the aggregate, or by the private sector of $100,000,000 or more in any one year. Though this rule will not result in such an expenditure, we do discuss the effects of this rule elsewhere in this preamble.

Taking of Private Property

This rule will not effect a taking of private property or otherwise have taking implications under Executive Order 12630, Governmental Actions and Interference with Constitutionally Protected Property Rights.

Civil Justice Reform

This rule meets applicable standards in sections 3(a) and 3(b)(2) of Executive Order 12988, Civil Justice Reform, to minimize litigation, eliminate ambiguity, and reduce burden.

Environmental

The Coast Guard has considered the environmental impact of this rule and concluded that under figure 2–1, paragraph 34(g), of Commandant Instruction M14475.1D that this rule is categorically excluded from further environmental documentation. A ''Categorical Exclusion Determination'' is available in the docket for inspection or copying where indicated under **ADDRESSES.**

Protection of Children

We have analyzed this rule under Executive Order 13045, Protection of Children from Environmental Health Risks and Safety Risks. This rule is not an economically significant rule and does not create an environmental risk to health or risk to safety that may disproportionately affect children.

Indian Tribal Governments

This rule does not have tribal implications under Executive Order 13175, Consultation and Coordination with Indian Tribal Governments, because it does not have a substantial direct effect on one or more Indian tribes, on the relationships between the Federal Government and Indian tribes, or on the distribution of power and responsibilities between the Federal Government and Indian tribes.

Energy Effects

We have analyzed this rule under Executive Order 13211, Actions Concerning Regulations That Significantly Affect Energy Supply, Distribution, or use. We have determined that it is not a ''significant energy action'' under Executive Order 12866 and is not likely to have a significant adverse effect on the supply, distribution, or use of energy. It has not been designated by the Administrator of the Office of Information and Regulatory Affairs as a significant energy action. Therefore, it does not require a Statement of Energy Effects under Executive Order 13211.

List of Subjects in 33 CFR Part 165

Harbors, Marine safety, Navigation (water), Reports and recordkeeping requirements, Security measures, Waterways.

For the reasons discussed in the preamble, the Coast Guard amends 33 CFR part 165, as follows:

PART 165—REGULATED NAVIGATION AREAS AND LIMITED ACCESS AREAS

1. The authority citation for part 165 continues to read as follows:

Authority: 33 U.S.C. 1231; 50 U.S.C. 191, 33 CFR 1.05–1(g), 6.04–1, 6.04–6, 160.5; 49 CFR 1.46.

2. A new temporary § 165.T07–136 is added to read as follows:

§ 165.T07–136 Security Zones; Charlotte Amalie Harbor, St. Thomas, USVI.

(a) *Regulated area.* Temporary moving security zones are established 50 yards around all cruise ships while they enter, depart, are moored at any pier or anchored in any anchorage in Charlotte Amalie Harbor. These temporary security zones are activated when cruise ships pass: St. Thomas Harbor green lighted buoy #3 in approximate position 18°19′19″ North, 64°55′40″ West when entering the port using St. Thomas Channel; red buoy #2 in approximate position 18°19′15″ North, 64°55′59″ West when entering the port using East Gregorie Channel; and red lighted buoy #4 in approximate position 18°18′16″ North, 64°57′30″ West when entering the port using West Gregorie Channel. These zones are deactivated when the cruise ship passes any of these buoys on its departure from port.

(b) *Regulations.* In accordance with the general regulations in § 165.33 of this part, no person or vessel shall enter or remain in this security zone unless specifically authorized by the Captain of the Port San Juan, a Coast Guard commissioned, warrant, or petty officer designated by him or a designated West Indies Company Security or Virgin Islands Port Authority Security Manager. The Captain of the Port will notify the public when a zone is activated and any changes in the status of the zones by Marine Safety Radio Broadcast on VHF Marine Band Radio, Channel 16 (157.1 Mhz) and by a Marine Safety Information Bulletin (MSIB) sent by facsimile and electronic mail.

(c) *Dates.* This section becomes effective at 6 p.m. on December 19, 2001 and will terminate at 11:59 p.m. on June 15, 2002.

Dated: December 17, 2001.

J.A. Servidio,

Commander, U.S. Coast Guard, Captain of the Port.

[FR Doc. 02–2546 Filed 1–31–02; 8:45 am]

BILLING CODE 4910–15–P

DEPARTMENT OF TRANSPORTATION

Coast Guard

33 CFR Part 165

[CGD07–02–002]

RIN 2115–AA97

Security Zones; St. Croix, U.S. Virgin Islands

AGENCY: Coast Guard, DOT.

ACTION: Temporary final rule.

SUMMARY: The Coast Guard is extending the temporary fixed security zone around all commercial tank and freight vessels moored at every dock at the HOVENSA refinery at St. Croix, U.S. Virgin Islands. All persons aboard commercial tank and freight vessels moored at the HOVENSA docks must remain on board for the duration of the port call unless escorted by designated HOVENSA personnel or specifically permitted to disembark by the U.S. Coast Guard Captain of the Port San Juan. This security zone is needed for national security reasons to protect the public and port of HOVENSA from potential subversive acts.

DATES: This regulation becomes effective at 5 a.m. on January 9, 2002 and will terminate at 11:59 p.m. on June 15, 2002.

ADDRESSES: Comments and material received from the public, as well as documents indicated in this preamble as being available in the docket, are part of [CGD07–02–002] and are available for inspection or copying at Marine Safety Office San Juan, RODVAL Bldg, San Martin St. #90 Ste 400, Guaynabo, PR 00968, between 7 a.m. and 3:30 p.m. Monday through Friday, except Federal holidays.

FOR FURTHER INFORMATION CONTACT: LCDR Robert Lefevers, Marine Safety Office San Juan, Puerto Rico at (787) 706–2440.

SUPPLEMENTARY INFORMATION:

Regulatory Information

We did not publish a notice of proposed rulemaking (NPRM) for this regulation. Under 5 U.S.C. 553(b)(B), the Coast Guard finds that good cause exists for not publishing a NPRM. Publishing a NPRM and delaying the rule's effective date would be contrary to the public interest since immediate action is needed to protect the public, ports and waterways of the United States. The Coast Guard will issue a broadcast notice to mariners to advise mariners of the restriction.

For the same reasons, under 5 U.S.C. 553(d)(3), the Coast Guard finds that good cause exists for making this rule effective less than 30 days after publication in the **Federal Register**.

Background and Purpose

Due to the highly volatile nature of the substances stored at the HOVENSA facility, there is a risk that subversive activity could be launched by persons aboard commercial tank and freight vessels calling at the HOVENSA facility in St Croix, USVI. The Captain of the Port San Juan is reducing this risk by prohibiting all persons aboard these vessels from disembarking while moored at the HOVENSA facility unless escorted by designated HOVENSA personnel or specifically permitted by the Captain of the Port San Juan. HOVENSA security personnel, in conjunction with local police department personnel, will be present to enforce this security zone. A security zone regulation for the same location was published in the **Federal Register** on September 28, 2001 (66 FR 49534). However, that regulation expired at 11:59 p.m. on October 15, 2001. We extended this security zone in CGD07–01–125 until December 31, 2001. The Captain of the Port San Juan has identified the need to keep a security zone in place for national security reasons and to protect the public and the port of HOVENSA from potential subversive acts.

Regulatory Evaluation

This rule is not a significant regulatory action under section 3(f) of Executive Order 12866, Regulatory Planning and Review, and does not require an assessment of potential costs and benefits under section 6(a)(3) of that order. The Office of Management and

Budget has not reviewed it under that order. It is not significant under the regulatory policies and procedures of the Department of Transportation (DOT) (44 FR 11040; February 26, 1979) because this rule is in effect for a limited time and crewmember may be allowed to disembark when escorted by designated HOVENSA security or authorized by the Captain of the Port of San Juan.

Small Entities

Under the Regulatory Flexibility Act (5 U.S.C. 601–612), the Coast Guard considered whether this rule would have a significant economic effect upon a substantial number of small entities. ''Small entities'' include small businesses, not-for-profit organizations that are independently owned and operated and are not dominant in their fields, and governmental jurisdictions with populations of less than 50,000.

The Coast Guard certifies under 5 U.S.C. 605(b) that this rule will not have a significant economic impact on a substantial number of small entities because persons may be allowed to disembark the vessels on a case by case basis with the authorization of the Captain of the Port and this temporary rule is only in effect for a limited time.

Assistance for Small Entities

Under section 213(a) of the Small Business Regulatory Enforcement Fairness Act of 1996 (Pub. L. 104–121), we offer to assist small entities in understanding the rule so that they can better evaluate its effects on them and participate in the rulemaking process. If the rule will affect your small business, organization, or government jurisdiction and you have questions concerning its provisions or options for compliance, please contact the person listed under **FOR FURTHER INFORMATION CONTACT** for assistance in understanding this rule.

Small businesses may send comments on the actions of Federal employees who enforce, or otherwise determine compliance with, Federal regulations to the Small Business and Agriculture Regulatory Enforcement Ombudsman and the Regional Small each agency's responsiveness to small business. If you wish to comment on actions by employees of the Coast Guard, call 1–888–REG–FAIR (1–888–734–3247).

Collection of Information

This rule calls for no new collection of information requirements under the Paperwork Reduction Act (44 U.S.C. 3501–3520).

Federalism

A rule has implication for federalism under Executive Order 13132, Federalism, if it has a substantial direct effect on State or local governments and would either preempt State law or impose a substantial direct cost of compliance on them. We have analyzed this rule under that Order and have determined that it does not have implications for federalism.

Unfunded Mandates Reform Act

The Unfunded Mandates Reform Act of 1995 (2 U.S.C. 1531–1538) requires Federal agencies to assess the effects of their discretionary regulatory actions. In particular, the Act addresses actions that may result in the expenditure by a State, local, or tribal government, in the aggregate, or by the private sector of $100,000,000 or more in any one year. Though this rule will not result in such an expenditure, we do discuss the effects of this rule elsewhere in this preamble.

Taking of Private Property

This rule will not effect a taking of private property or otherwise have taking implications under Executive Order 12630, Governmental Actions and Interference with Constitutionally Protected Property Rights.

Civil Justice Reform

This rule meets applicable standards in sections 3(a) and 3(b)y(2) of Executive Order 12988, Civil Justice Reform, to minimize litigation, eliminate ambiguity, and reduce burden.

Environmental

The Coast Guard has considered the environmental impact of this rule and will prepare a categorical exclusion as per Figure 2–1, paragraph 34(g) of the Coast Guard NEPA Implementing Procedures, Commandant Instruction M16475.1D.

Protection of Children

We have analyzed this rule under Executive Order 13045, Protection of Children from Environmental Health Risks and Safety Risks. This rule is not an economically significant rule and does not create an environmental risk to health or risk to safety that may disproportionately affect children.

Indian Tribal Governments

This rule does not have tribal implications under Executive Order 13175, Consultation and Coordination with Indian Tribal Governments, because it does not have a substantial direct effect on one or more Indian tribes, on the relationships between the Federal Government and Indian tribes, or on the distribution of power and responsibilities between the Federal Government and Indian tribes.

Energy Effects

We have analyzed this rule under Executive Order 13211, Actions Concerning Regulations That Significantly Affect Energy Supply, Distribution, or use. We have determined that it is not a ''significant energy action'' under Executive Order 12866 and is not likely to have a significant adverse effect on the supply, distribution, or use of energy. It has not been designated by the Administrator of the Office of Information and Regulatory Affairs as a significant energy action. Therefore, it does not require a Statement of Energy Effects under Executive Order 13211.

List of Subjects in 33 CFR Part 165

Harbors, Marine safety, Navigation (water), Reporting and recordkeeping requirements, Security measures, Waterways.

For the reasons discussed in the preamble, the Coast Guard amends 33 CFR part 165, as follows:

PART 165—REGULATED NAVIGATION AREAS AND LIMITED ACCESS AREAS

1. The authority citation for part 165 continues to read as follows:

Authority: 33 U.S.C. 1231; 50 U.S.C. 191, 33 CFR 1.05–1(g), 6.04–1, 6.04–6, 160.5; 49 CFR 1.46.

2. A new temporary § 165.T–07–002 is added to read as follows:

§ 165.T07–002 Security Zone; HOVENSA Refinery, St. Croix, U.S. Virgin Islands.

(a) *Regulated area.* A temporary fixed security zone is established around all commercial tank and freight vessels moored at every dock at the HOVENSA refinery at St Croix, U. S. Virgin Islands.

(b) *Regulations.* In accordance with the general regulations of § 165.33 of this part, all persons aboard commercial tank and freight vessels moored at the docks in the regulated area must remain on board for the duration of the port call unless escorted by designated HOVENSA personnel or specifically authorized by the Captain of the Port San Juan, or a Coast Guard commissioned, warrant, or petty officer designated by him. The Captain of the Port will notify the public of any changes in the status of this zone by Marine Safety Radio Broadcast on VHF Marine Band Radio, Channel 16 (157.1 Mhz).

(c) *Dates.* This section becomes effective at 5 a.m. on January 9, 2002,

and will terminate at 11:59 p.m. on June 15, 2002.

Dated: January 8, 2002.

J.A. Servidio,

Commander, U.S. Coast Guard, Captain of the Port.

[FR Doc. 02–2543 Filed 1–31–02; 8:45 am]

BILLING CODE 4910–15–P

ENVIRONMENTAL PROTECTION AGENCY

40 CFR Part 180

[OPP–301206; FRL–6818–3]

RIN 2070–AB78

Bifenazate; Pesticide Tolerance

AGENCY: Environmental Protection Agency (EPA).

ACTION: Final rule.

SUMMARY: This regulation establishes tolerances for (i) combined residues of bifenazate (hydrazinecarboxylic acid, 2-(4-methoxy-[1,1'-biphenyl]-3-yl), 1-methylethyl ester) and D3598 (expressed as bifenazate; diazinecarboxylic acid, 2-(4-methoxy-[1,1'-biphenyl]-3-yl), 1-methylethylester) in or on raw agricultural commodities (apple, wet pomace; cotton, undelinted seed; cotton gin byproducts (gin trash); fruit, pome group; grape; grape, raisin; hop, dried cones; nectarine; peach; plum; strawberry and in fat of cattle, goat, hog, horse and sheep and (ii) combined residues of bifenazate, D3598 (expressed as bifenazate), A1530 (1,1'-biphenyl, 4-ol) and A1530-sulfate (expressed as A1530; 1,1'-biphenyl, 4-oxysulfonic acid) in meat and meat byproducts of cattle, goat, horse, hog and sheep and milk. Uniroyal Chemical Company requested this tolerance under the Federal Food, Drug, and Cosmetic Act, as amended by the Food Quality Protection Act (FQPA) of 1996.

DATES: This regulation is effective February 1, 2002. Objections and requests for hearings, identified by docket control number OPP–301206, must be received by EPA on or before April 2, 2002.

ADDRESSES: Written objections and hearing requests may be submitted by mail, in person, or by courier. Please follow the detailed instructions for each method as provided in Unit VI. of the **SUPPLEMENTARY INFORMATION**. To ensure proper receipt by EPA, your objections and hearing requests must identify docket control number OPP–301206 in the subject line on the first page of your response.

FOR FURTHER INFORMATION CONTACT: By mail: Suku Oonnithan, Registration Division (7505C), Office of Pesticide Programs, Environmental Protection Agency, 1200 Pennsylvania Ave., NW., Washington, DC 20460; telephone number: (703) 605–0368; and e-mail address: oonnithan.suku@epa.gov.

SUPPLEMENTARY INFORMATION:

I. General Information

A. Does this Action Apply to Me?

You may be affected by this action if you are an agricultural producer, food manufacturer, or pesticide manufacturer. Potentially affected categories and entities may include, but are not limited to:

Categories	NAICS	Examples of Potentially Affected Entities
Industry	111	Crop production
	112	Animal production
	311	Food manufacturing
	32532	Pesticide manufacturing

This listing is not intended to be exhaustive, but rather provides a guide for readers regarding entities likely to be affected by this action. Other types of entities not listed in the table could also be affected. The North American Industrial Classification System (NAICS) codes have been provided to assist you and others in determining whether or not this action might apply to certain entities. If you have questions regarding the applicability of this action to a particular entity, consult the person listed under **FOR FURTHER INFORMATION CONTACT**.

B. How Can I Get Additional Information, Including Copies of this Document and Other Related Documents?

1. *Electronically*. You may obtain electronic copies of this document, and certain other related documents that might be available electronically, from the EPA Internet Home Page at http://www.epa.gov/. To access this document, on the Home Page select ''Laws and Regulations'', ''Regulations and Proposed Rules,'' and then look up the entry for this document under the ''**Federal Register**—Environmental Documents.'' You can also go directly to the **Federal Register** listings at http://www.epa.gov/fedrgstr/. To access the Office of Prevention, Pesticides, and Toxic Substances (OPPTS) Harmonized Guidelines referenced in this document, go directly to the guidelines at http://www.epa.gov/opptsfrs/home/guidelin.htm. A frequently updated electronic version of 40 CFR part 180 is available at http://www.access.gpo.gov/nara/cfr/cfrhtml_180/Title_40/40cfr180_00.html, a beta site currently under development.

2. *In person*. The Agency has established an official record for this action under docket control number OPP–301206. The official record consists of the documents specifically referenced in this action, and other information related to this action, including any information claimed as Confidential Business Information (CBI). This official record includes the documents that are physically located in the docket, as well as the documents that are referenced in those documents. The public version of the official record does not include any information claimed as CBI. The public version of the official record, which includes printed, paper versions of any electronic comments submitted during an applicable comment period is available for inspection in the Public Information and Records Integrity Branch (PIRIB), Rm. 119, Crystal Mall #2, 1921 Jefferson Davis Hwy., Arlington, VA, from 8:30 a.m. to 4 p.m., Monday through Friday, excluding legal holidays. The PIRIB telephone number is (703) 305–5805.

II. Background and Statutory Findings

In the **Federal Register** of April 18, 2001; (66 FR 19935) (FRL–6777–4), EPA issued a notice pursuant to section 408 of the Federal Food, Drug, and Cosmetic Act (FFDCA), 21 U.S.C. 346a as amended by the FQPA of 1996 (Public Law 104–170) announcing the filing of a pesticide petition (PP 0F6108) for tolerance by Uniroyal Chemical Company, Benson Road, Middlebury, CT 06749. This notice included a summary of the petition prepared by Uniroyal Chemical Company, the registrant. There were no comments received in response to the notice of filing.

The petition requested that 40 CFR part 180 be amended by establishing a tolerance for residues of the insecticide bifenazate in or on the raw agricultural commodities apple, wet pomace at 1.2 parts per million (ppm); cotton seed at 0.5 ppm; cotton, gin byproducts (gin trash) at 20 ppm; fruit, pome, group at 0.75 ppm; fruit, stone, group (except cherries) at 1.5 ppm; grape at 0.75 ppm; hop at 15 ppm and strawberry at 1.5 ppm. As cotton processed commodities fed to animals may be transferred to milk and edible tissue of ruminants, tolerances were also proposed for meat at 0.02 ppm and milk at 0.01 ppm.

Section 408(b)(2)(A)(i) of the FFDCA allows EPA to establish a tolerance (the legal limit for a pesticide chemical residue in or on a food) only if EPA

determines that the tolerance is ''safe.'' Section 408(b)(2)(A)(ii) defines ''safe'' to mean that'' there is a reasonable certainty that no harm will result from aggregate exposure to the pesticide chemical residue, including all anticipated dietary exposures and all other exposures for which there is reliable information.'' This includes exposure through drinking water and in residential settings, but does not include occupational exposure. Section 408(b)(2)(C) requires EPA to give special consideration to exposure of infants and children to the pesticide chemical residue in establishing a tolerance and to ''ensure that there is a reasonable certainty that no harm will result to infants and children from aggregate exposure to the pesticide chemical residue.''

EPA performs a number of analyses to determine the risks from aggregate exposure to pesticide residues. For further discussion of the regulatory requirements of section 408 and a complete description of the risk assessment process, see the final rule on Bifenthrin Pesticide Tolerances (62 FR 62961, November 26, 1997) (FRL–5754–7).

III. Aggregate Risk Assessment and Determination of Safety

Consistent with section 408(b)(2)(D), EPA has reviewed the available scientific data and other relevant information in support of this action. EPA has sufficient data to assess the hazards of and to make a determination on aggregate exposure, consistent with section 408(b)(2), for tolerances for combined residues of bifenazate and D3598 (expressed as bifenazate) in or on apple, wet pomace at 1.2 ppm; cattle, fat at 0.1 ppm; cotton, gin byproducts at 35 ppm; cotton, undelinted seed at 0.75 ppm; fruit, pome, group at 0.75 ppm; goat, fat at 0.1 ppm; grape at 0.75 ppm; grape, raisin at 1.2 ppm; hog, fat at 0.1 ppm; hop, dried cones at 15 ppm; horse, fat at 0.1 ppm; nectarine at 1.7 ppm; peach at 1.7 ppm; plum at 0.3 ppm; sheep, fat at 0.1 ppm; strawberry at 1.5 ppm and combined residues of bifenazate and D3598 (expressed as bifenazate), A1530 and A1530-sulfate (expressed as A1530) in: cattle, meat at 0.01 ppm; cattle, meat byproducts at 0.01 ppm; goat, meat at 0.01 ppm; goat, meat byproducts at 0.01 ppm; hog, meat at 0.01 ppm; hog, meat byproducts at 0.01 ppm; horse, meat at 0.01 ppm; horse, meat byproducts at 0.01 ppm; milk at 0.01 ppm; sheep, meat at 0.01 ppm; sheep, meat byproducts at 0.01 ppm. EPA's assessment of exposures and risks associated with establishing the tolerance follows.

A. Toxicological Profile

EPA has evaluated the available toxicity data and considered its validity, completeness, and reliability as well as the relationship of the results of the studies to human risk. EPA has also considered available information concerning the variability of the sensitivities of major identifiable subgroups of consumers, including infants and children. The nature of the toxic effects caused by bifenazate are discussed in the following Table 1 as well as the no observed adverse effect level (NOAEL) and the lowest observed adverse effect level (LOAEL) from the toxicity studies reviewed.

TABLE 1—SUBCHRONIC, CHRONIC, AND OTHER TOXICITY

OPPTS Guideline No.	Study Type (All Studies Acceptable)	Results
870.3100	90–Day oral toxicity rodents-rat	NOAEL = 13.8 mg/kg/day in males, 3.2 mg/kg/day in females. LOAEL = 27.7 mg/kg/day in males, 16.3 mg/kg/day in females based on decreased body weight gain in both sexes, decreased liver weight in males, increased spleen weight in females, and histopathology in liver in both sexes, and histopathological changes in the spleen and adrenal cortex in males.
870.3150	90–Day oral toxicity nonrodents-dog	NOAEL = 0.9 mg/kg/day in males, 1.3 mg/kg/day in females. LOAEL = 10.4 mg/kg/day in males, 10.7 mg/kg/day in females based on changes in hematological parameters in both sexes, increased bilirubin in the urine in males, increased absolute and relative liver weight in females and liver histopathologic effects in both sexes.
870.3200	21–Day dermal toxicity-rat	NOAEL = 80 mg/kg/day in males and females LOAEL = 400 mg/kg/day in males and females based on decreased body weight in females, decreased food consumption in both sexes, increased urinary ketones, increased urinary protein, increased urinary specific gravity, and decreased urinary volume in both sexes, and increased incidence of extramedullary hematopoiesis in the spleen in both sexes.
870.3700	Prenatal developmental in rodents-rat	Maternal NOAEL = 10 mg/kg/day. LOAEL = 100 mg/kg/day based on increased clinical signs, and decreased body weight, body weight gain, and food consumption. Developmental NOAEL = 500 mg/kg/day LOAEL = not established
870.3700	Prenatal developmental in nonrodents-rabbit	Maternal NOAEL = 200 mg/kg/day LOAEL = not established; Doses for the main study were selected based on a range-finding study in which groups of 5 rabbits each received 0, 125, 250, 500, 750, or 1,000 mg/kg/day during gestation days 6–19 by gavage.

TABLE 1—SUBCHRONIC, CHRONIC, AND OTHER TOXICITY—Continued

OPPTS Guideline No.	Study Type (All Studies Acceptable)	Results
		Maternal toxicity was seen as increased deaths and decreased body weight at 750 mg/kg/day and above. A treatment-related increase in the number of does aborting was seen at 250 mg/kg/day and above. Developmental NOAEL = 200 mg/kg/day. LOAEL = not established; Due to only one or two litters available in each of the treated groups in the range finding study, a clear assessment of developmental toxicity was not possible. Based on these results, doses of 10, 50, and 200 mg/kg/day were selected for the main study.
870.3800	Reproduction and fertility effects-rat	Parental/Systemic NOAEL = 1.6 mg/kg/day in males, 1.8 mg/kg/day in females. LOAEL = 6.5 mg/kg/day in males and 7.4 mg/kg/day in females based on decreased body weight, body weight gain, and food consumption in both sexes. Reproductive NOAEL = 16.4 mg/kg/day in males, 18.3 mg/kg/day in females. LOAEL = not established. Offspring NOAEL = 16.4 mg/kg/day in males, 18.3 mg/kg/day in females. LOAEL = not established.
870.4100	Chronic toxicity dogs	NOAEL = 1.01 mg/kg/day in males, 1.05 mg/kg/day in females LOAEL = 8.95 mg/kg/day in males, 10.42 mg/kg/day in females based on changes in hematological and clinical chemistry parameters in both sexes and histopathological effects in bone marrow, liver, and kidney in both sexes.
870.4300	Chronic/Carcinogenicity rats	NOAEL = 3.9 mg/kg/day in males, 4.8 mg/kg/day in females. LOAEL = 9.7 mg/kg/day in males and 9.7 mg/kg/day in females based on decreased body weight, body weight gain, and food consumption in both sexes. No evidence of carcinogenicity
870.4300	Carcinogenicity mice	NOAEL = 1.5 mg/kg/day in males, 19.7 mg/kg/day in females. LOAEL = 15.4 mg/kg/day in males, 35.7 mg/kg/day in females based on decreased body weight and body weight gain in females and hematological effects and decreased kidney weight in males. No evidence of carcinogenicity
870.5265	Gene Mutation	Non-mutagenic when tested up to 5000 ug/plate, in presence and absence of activation, in *S. typhimurium* strains TA98, TA100, TA1535 and TA1537 and *E. coli* strain WP2uvra.
870.5300	Gene Mutation	Non-mutagenic at the TK locus in L5178Y mouse lymphoma cells tested up to cytotoxic concentrations or limit of solubility, in presence and absence of S-9 activation.
870.5375	Chromosome aberration	Did not induce structural chromosome aberration in CHO-K1 cell cultures in the presence and absence of activation up to cytotoxic concentrations.
870.5385	Chromosomal aberration	Non-mutagenic in ICR mouse bone marrow micronucleus chromosomal aberrations assay up to cytotoxic concentrations.

TABLE 1—SUBCHRONIC, CHRONIC, AND OTHER TOXICITY—Continued

OPPTS Guideline No.	Study Type (All Studies Acceptable)	Results
870.7485	Metabolism and pharmacokinetics -rat	Total recovery of the administered dose was > 93% for all treatment groups. Fecal excretion was the major route of elimination (66–83% of the dose), with eight primary metabolites detected. These metabolites, as well as those identified in the urine and bile, were the result of metabolic reactions including hydrazine oxidation to the diazene (D3598), demethylation, ring hydroxylation, and molecular scission with the loss of hydrazinecarboxylic acid portion to methoxybiphenyl (D1989) with subsequent conjugation. The Metabolism Assessment Review Committee (MARC) determined that D1989 is not likely to be more toxic than the parent compound.

B. Toxicological Endpoints

The dose at which no adverse effects are observed (the NOAEL) from the toxicology study identified as appropriate for use in risk assessment is used to estimate the toxicological level of concern (LOC). However, the lowest dose at which adverse effects of concern are identified (the LOAEL) is sometimes used for risk assessment if no NOAEL was achieved in the toxicology study selected. An uncertainty factor (UF) is applied to reflect uncertainties inherent in the extrapolation from laboratory animal data to humans and in the variations in sensitivity among members of the human population as well as other unknowns. An UF of 100 is routinely used, 10X to account for interspecies differences and 10X for intra species variations.

For dietary risk assessment (other than cancer) the Agency uses the UF to calculate an acute or chronic reference dose (acute RfD or chronic RfD) where the RfD is equal to the NOAEL divided by the appropriate UF (RfD = NOAEL/UF). Where an additional safety factor is retained due to concerns unique to the FQPA, this additional factor is applied to the RfD by dividing the RfD by such additional factor. The acute or chronic Population Adjusted Dose (aPAD or cPAD) is a modification of the RfD to accommodate this type of FQPA Safety Factor.

For non-dietary risk assessments (other than cancer) the UF is used to determine the LOC. For example, when 100 is the appropriate UF (10X to account for interspecies differences and 10X for intraspecies variations) the LOC is 100. To estimate risk, a ratio of the NOAEL to exposures (margin of exposure (MOE) = NOAEL/exposure) is calculated and compared to the LOC.

The linear default risk methodology (Q*) is the primary method currently used by the Agency to quantify carcinogenic risk. The Q* approach assumes that any amount of exposure will lead to some degree of cancer risk. A Q* is calculated and used to estimate risk which represents a probability of occurrence of additional cancer cases (e.g., risk is expressed as 1×10^{-6} or one in a million). Under certain specific circumstances, MOE calculations will be used for the carcinogenic risk assessment. In this non-linear approach, a ''point of departure'' is identified below which carcinogenic effects are not expected. The point of departure is typically a NOAEL based on an endpoint related to cancer effects though it may be a different value derived from the dose response curve. To estimate risk, a ratio of the point of departure to exposure (MOE_{cancer} = point of departure/exposures) is calculated. A summary of the toxicological endpoints for bifenazate used for human risk assessment is shown in the following Table 2:

TABLE 2—SUMMARY OF TOXICOLOGICAL DOSE AND ENDPOINTS FOR BIFENAZATE FOR USE IN HUMAN RISK ASSESSMENT[1]

Exposure Scenario	Dose Used in Risk Assessment, UF	FQPA SF* and Level of Concern for Risk Assessment	Study and Toxicological Effects
Acute Dietary for general population and females 13–50 years old	None	An acute dietary endpoint was not selected based on the absence of an appropriate endpoint attributed to a single dose	None
Chronic Dietary all populations	NOAEL= 1.0 mg/kg/day; UF = 100; Chronic RfD = 0.01 mg/kg/day	FQPA SF = 1X; cPAD = cRfD/FQPA; SF = 0.01 mg/kg/day	LOAEL = 8.9/10.4 mg/kg/day [M/F] based on changes in hematological and clinical chemistry parameters, and histopathology in bone marrow, liver, and kidney in the One Year Dog Feeding Study
Incidental Oral, Short Term (1–30 days)	Oral NOAEL = 10 mg/kg/day	LOC = 100	LOAEL = 100 mg/kg/day based on clinical signs, decreased body weight and food consumption during the dosing period in the Rat Developmental Study

TABLE 2—SUMMARY OF TOXICOLOGICAL DOSE AND ENDPOINTS FOR BIFENAZATE FOR USE IN HUMAN RISK ASSESSMENT[1]—Continued

Exposure Scenario	Dose Used in Risk Assessment, UF	FQPA SF* and Level of Concern for Risk Assessment	Study and Toxicological Effects
Incidental Oral, Intermediate Term (30 days – 6 months)	Oral NOAEL = 0.9 mg/kg/day	LOC = 100	LOAEL = 10.4/10.7 mg/kg/day [M/F] based on changes in hematologic parameters in the 90–Day Subchronic Dog Study
Short-, Intermediate- and Long-Term Dermal (1–30 days, 30 days–6 months, and 6 months to lifetime) (Occupational/Residential)	Dermal NOAEL = 80 mg/kg/day	LOC for MOE = 100	LOAEL = 400 mg/kg/day based on decreased body weight and food consumption, hematologic effects, increased spleen weight and extramedullary hemapoiesis in the spleen in the 21–Day Dermal Toxicity Study in Rats
Short-Term Inhalation (1–30 days) (Occupational/Residential)	Oral NOAEL= 10 mg/kg/day (inhalation absorption rate = 100%)	LOC for MOE = 100	LOAEL = 100 mg/kg/day based on decreased body weight and food consumption in the Rat Developmental Study
Intermediate-Term Inhalation (30 days–6 months) (Occupational/Residential)	Oral study NOAEL= 0.9 mg/kg/day (inhalation absorption rate = 100%)	LOC for MOE = 100	LOAEL = 10.4/10.7 mg/kg/day based on changes in hematologic parameters in the 90–Day Dog Feeding Study
Long-Term Inhalation (6 months-lifetime) (Occupational/Residential)	Oral study NOAEL= 1.0 mg/kg/day (inhalation absorption rate = 100%)	LOC for MOE = 100	LOAEL = 8.9/10.4 mg/kg/day [M/F] based on changes in hematological and clinical chemistry parameters, and histopathology in bone marrow, liver, and kidney in the One Year Dog Feeding Study
Cancer (oral, dermal, inhalation)	Cancer classification not likely	Risk Assessment not conducted	No evidence of carcinogenicity

[1] FQPA SF = Food Quality Protection Act safety factor, LOAEL = lowest observed adverse effect level, LOC = level of concern, MOE = margin of exposure, NOAEL = no observed adverse effect level, PAD = population adjusted dose (a = acute, c = chronic), RfD = reference dose, UF = uncertainty factor.

*The reference to the FQPA Safety Factor refers to any additional safety factor retained due to concerns unique to the FQPA.

C. Exposure Assessment

1. *Dietary exposure from food and feed uses.* Tolerances have been established 40 CFR 180.572 for the combined residues of bifenazate and D3598 (expressed as bifenazate) in or on raw agricultural commodities and animal fat and combined residues of bifenazate, D3598 (expressed as bifenazate), A1530 and A1530-sulfate (expressed as A1530) in animal tissues (excluding fat) and milk. Risk assessments were conducted by EPA to assess dietary exposures from bifenazate in food as follows:

i. *Acute exposure.* The Agency did not identify an acute endpoint for the general population, infants, children, and females 13 to 50 years old. Therefore, an acute dietary exposure analysis is not necessary.

ii. *Chronic exposure.* A chronic dietary exposure analysis was conducted using the Dietary Exposure Evaluation Model (DEEM® ver 7.73) which incorporates consumption data from the USDA 1989–92 Continuing Surveys of Food Intake by Individuals (CSFII). The dietary exposure analysis assumed tolerance level residues and 100% crop treated for all registered and proposed crops. Processing factors for apple juice and grape juice were reduced to 0.23 and 0.17, respectively. The DEEM® default processing factor ratio between juice and concentrate was maintained and default processing factors were assumed for all other commodities.

There is a Federal Insecticide, Fungicide and Rodenticide Act (FIFRA) sec 18 registration for application of bifenazate to greenhouse grown tomatoes. The potential for fresh market tomatoes to enter the processed market channel from this use is minimal for the following reasons: (a) this sec 18 approval will treat only about 300 acres of greenhouse grown tomatoes in Colorado, Texas and Virginia, (b) the tomato variety grown is an indeterminant type unsuitable for processing due to less solids and higher water content, (c) fresh market tomatoes do not tolerate the bulk handling required for processing, (d) higher price for fresh tomatoes would dictate the growers not to divert greenhouse grown tomatoes to the processing market. Therefore, the dietary contribution of bifenazate residues from treated tomatoes was determined to be negligible and a zero residue in/on tomatoes was assumed for this action.

The chronic dietary food exposure estimates to bifenazate were less than The Agency 's level of concern (< 100% cPAD) for the general U.S. population and all population subgroups. The most highly exposed population was infants (< 1 year) at 52% of the cPAD.

iii. *Cancer.* The Agency classified bifenazate as ''not likely'' to be a human carcinogen according to EPA *Proposed Guidelines for Carcinogen Risk Assessment* (April 10, 1996). Therefore, a cancer dietary exposure analysis is not necessary.

2. *Dietary exposure from drinking water.* The available environmental fate data indicate that bifenazate may not persist in the environment nor have the ability to leach into ground water resources. Bifenazate dissipates quickly through metabolic processes under aerobic soil conditions (with a half-life of 30 minutes), by aqueous photolysis (half-life of 0.67 day), and by hydrolysis, especially in alkaline water (half-life of 0.08 day). In neutral and acidic water systems, bifenazate may persist for approximately one day or longer (half-lives of 0.8 day at pH 7, and 5.4 days in pH 5). Although photodegradation of bifenazate in soil may be possible, it could not be confirmed in the laboratory

due to rapid biodegradation of bifenazate under aerobic soil conditions. In the laboratory soil column studies, bifenazate showed low to no mobility in the soils tested.

Two major degradates of bifenazate were identified in the aqueous photolysis and aerobic soil metabolism studies D3598 (diazinecarboxylic acid, 2-(4-methoxy-1,1'-biphenyl]-3-yl), 1-methylethylester) and D1989 (4-methoxybiphenyl). Similar to parent bifenazate, D3598 seemed to metabolize quickly under aerobic soil conditions (half-life of 8.3 hours). D1989 on the other hand, is believed to be more persistent and have some potential to leach into the ground water resources. D1989 has an aerobic soil metabolism half-life of 60 days and was observed to have slight mobility in laboratory leaching studies. D1989 was the only degradate of bifenazate detected in terrestrial field dissipation studies, but only the 0 – 6 inches soil depth.

Since parent bifenazate and its degradate D3598 are not persistent in the environment and since there are no acute dietary endpoint data for these compounds, the Agency has decided not to consider bifenazate and D3598 as residues of concern in drinking water. Instead, D1989 was assumed to have the possible potential to contaminate the drinking water resources.

The Agency lacks sufficient monitoring exposure data to complete a comprehensive dietary exposure analysis and risk assessment for bifenazate in drinking water. Because the Agency does not have comprehensive monitoring data, drinking water concentration estimates are made by reliance on simulation or modeling taking into account data on the physical characteristics of bifenazate.

The Agency uses the FQPA Index Reservoir Screening Tool (FIRST) or the Pesticide Root Zone/Exposure Analysis Modeling System (PRZM/EXAMS), to produce estimates of pesticide concentrations in an index reservoir. The Screening Concentration in Ground Water (SCI-GROW) model is used to predict pesticide concentrations in shallow groundwater. For a screening-level assessment for surface water EPA will use FIRST (a tier 1 model) before using PRZM/EXAMS (a tier 2 model). The FIRST model is a subset of the PRZM/EXAMS model that uses a specific high-end runoff scenario for pesticides. While both FIRST and PRZM/EXAMS incorporate an index reservoir environment, the PRZM/EXAMS model includes a percent crop area factor as an adjustment to account for the maximum percent crop coverage within a watershed or drainage basin.

None of these models include consideration of the impact processing (mixing, dilution, or treatment) of raw water for distribution as drinking water would likely have on the removal of pesticides from the source water. The primary use of these models by the Agency at this stage is to provide a coarse screen for sorting out pesticides for which it is highly unlikely that drinking water concentrations would ever exceed human health levels of concern.

Since the models used are considered to be screening tools in the risk assessment process, the Agency does not use estimated environmental concentrations (EECs) from these models to quantify drinking water exposure and risk as a %RfD or %PAD. Instead, drinking water levels of comparison (DWLOCs) are calculated and used as a point of comparison against the model estimates of a pesticide's concentration in water. DWLOCs are theoretical upper limits on a pesticide's concentration in drinking water in light of total aggregate exposure to a pesticide in food, and from residential uses. Since DWLOCs address total aggregate exposure to bifenazate they are further discussed in the aggregate risk sections below.

Based on the FIRST or PRZM/EXAMS and SCI-GROW models the estimated environmental concentrations (EECs) of D1989 for acute exposures are estimated to be 18 parts per billion (ppb) for surface water and less than 1 part per trillion (ppt) for ground water. The EECs for chronic exposures are estimated to be 5 parts per billion (ppb) for surface water and <1 ppt for ground water. These concentrations were based on one application of bifenazate on hops at a maximum rate of 0.75 lb ai/acre/year, and on the assumption that bifenazate totally metabolizes and degrades to D1989.

3. *From non-dietary exposure.* The term ''residential exposure'' is used in this document to refer to non-occupational, non-dietary exposure (e.g., for lawn and garden pest control, indoor pest control, termiticides, and flea and tick control on pets). The currently registered Floramite® (EPA Reg. No. 400–481) and the proposed new product for food uses (Acramite®; EPA File Symbol: 400 LNG) of bifenazate are not expected to result in residential exposures. The Floramite® label allows application of bifenazate to landscape ornamentals at residential/recreational sites by commercial applicators only. The Acramite® label specifies agricultural use only. Therefore, this action assumes that bifenazate products will not be used by homeowners, so no homeowner exposure assessment is included. With respect to post-application residential exposures, the Agency contends that no significant post-application exposure is anticipated from treated ornamentals, either by residents or professional applicators; therefore, no residential post-application assessment is warranted.

4. *Cumulative exposure to substances with a common mechanism of toxicity.* Section 408(b)(2)(D)(v) requires that, when considering whether to establish, modify, or revoke a tolerance, the Agency consider ''available information'' concerning the cumulative effects of a particular pesticide's residues and ''other substances that have a common mechanism of toxicity.''

EPA does not have, at this time, available data to determine whether bifenazate has a common mechanism of toxicity with other substances or how to include this pesticide in a cumulative risk assessment. Unlike other pesticides for which EPA has followed a cumulative risk approach based on a common mechanism of toxicity, bifenazate does not appear to produce a toxic metabolite produced by other substances. For the purposes of this tolerance action, therefore, EPA has not assumed that bifenazate has a common mechanism of toxicity with other substances. For information regarding EPA's efforts to determine which chemicals have a common mechanism of toxicity and to evaluate the cumulative effects of such chemicals, see the final rule for Bifenthrin Pesticide Tolerances (62 FR 62961, November 26, 1997).

D. Safety Factor for Infants and Children

1. *In general.* FFDCA section 408 provides that EPA shall apply an additional tenfold margin of safety for infants and children in the case of threshold effects to account for prenatal and postnatal toxicity and the completeness of the data base on toxicity and exposure unless EPA determines that a different margin of safety will be safe for infants and children. Margins of safety are incorporated into EPA risk assessments either directly through use of a margin of exposure (MOE) analysis or through using uncertainty (safety) factors in calculating a dose level that poses no appreciable risk to humans.

2. *Prenatal and postnatal sensitivity.* There is no qualitative or quantitative toxicity evidence of increased susceptibility of rats and rabbits during

in utero exposure or during post-natal exposure based on developmental toxicity and reproductive toxicity studies performed with bifenazate.

3. *Conclusion*. There is a complete toxicity database for bifenazate and exposure data are complete or are estimated based on data that reasonably accounts for potential exposures. Based on the lack of increased susceptibility and the completeness of the toxicity and exposure databases, EPA has concluded that an additional 10X safety factor is not needed to protect infants and children.

E. Aggregate Risks and Determination of Safety

Because The Agency does not have ground and surface water monitoring data to calculate a quantitative aggregate exposure, DWLOCs were calculated. A DWLOC is a theoretical upper limit on a pesticide's concentration in drinking water in light of total aggregate exposure to a pesticide in food, drinking water, and through residential uses. A DWLOC will vary depending on the toxic endpoint, drinking water consumption, body weights, and pesticide uses. Different populations will have different DWLOCs. The Agency uses DWLOCs in the risk assessment process to assess potential concern for exposure associated with pesticides in drinking water. DWLOC values are not regulatory standards for drinking water. The Agency compares DWLOC values for each relevant population subgroup to the estimated concentration of bifenazate in surface water and ground water from the Agency' screening models. If the DWLOC values are greater than the estimated concentration of bifenazate in surface water and ground water, The Agency concludes with reasonable certainty that exposures to bifenazate in drinking water do not pose a significant human health risk.

To calculate the chronic DWLOCs, the food estimates (from DEEM®) were subtracted from the appropriate PAD value to obtain the maximum water exposure level. DWLOCs were then calculated using the standard body weights and drinking water consumption figures: 70kg/2L (adult male and U.S. population), 60 kg/2L (adult female), and 10kg/1L (infants and children). Because there is no residential exposure to bifenazate, only chronic aggregate exposures are necessary.

1. *Acute risk*. The Agency did not identify an acute endpoint for the general U.S. population, infants, children, and females 13–50 years old. Therefore, an acute risk is expected.

2. *Chronic risk*. The chronic dietary food exposure to bifenazate was estimated at 0.005242 mg/kg/day (52% of cPAD) for infants (< 1 year old) and 0.001557 mg/kg/day (16% of cPAD) for the general U.S. population. The calculated DWLOCs ranged between 48 to 320 ppb for all the population subgroups. The surface and ground water chronic EECs for the bifenazate metabolite D1989 were estimated to be 5 ppb and < 1 part per trillion (ppt), respectively. Since the chronic EECs are less than the Agency's DWLOCs for all population subgroups including infants, the chronic aggregate risk estimates are below the Agency's level of concern. Table 3 summarizes the chronic aggregate exposure to bifenazate.

TABLE 3—CHRONIC AGGREGATE EXPOSURES TO BIFENAZATE RESIDUES.

Scenario/Population Subgroup	cPAD, mg/kg/day	Chronic Food Exposure mg/kg/day	Maximum Chronic Water Exposure[1] mg/kg/day	Ground Water EEC[2], ppt	Surface Water EEC[2], ppb	Chronic DWLOC[3], ppb
U.S. Population	0.01	0.001557	0.008443	<1	5	300
All infants (< 1 year old)	0.01	0.005242	0.004758	<1	5	48
Children (1–6 years old)	0.01	0.003941	0.006059	<1	5	61
Children (7–12 years old)	0.01	0.002343	0.007657	<1	5	77
Females (13–50 years old)	0.01	0.001088	0.008912	<1	5	270
Males (13–19 years old)	0.01	0.000931	0.009069	<1	5	320
Males (20+ years old)	0.01	0.001050	0.00895	<1	5	310
Seniors (55+ years old)	0.01	0.001924	0.008076	<1	5	280

[1] Maximum chronic water exposure (mg/kg/day) = cPAD (mg/kg/day) - chronic food exposure from DEEM® (mg/kg/day); no residential exposure

[2] EECs resulting from one applications at 0.75 lbs ai/acre;

[3] The chronic DWLOCs were calculated as follows: DWLOC (µ/L) = maximum water exposure (mg/kg/day) x body weight (kg)/consumption (L/day) x 0.001 mg/µg

3. *Short-term risk*. A short term risk assessment was not performed because there are no significant exposures anticipated from registered residential non-food uses of bifenazate.

4. *Intermediate-term risk*. An intermediate term risk assessment was not performed because there are no significant post-application exposures anticipated from registered residential non-food uses of bifenazate.

5. *Aggregate cancer risk for U.S. population*. Bifenazate is not carcinogenic.

6. *Determination of safety*. Based on these risk assessments, EPA concludes that there is a reasonable certainty that no harm will result to the general population, and to infants and children from aggregate exposure to bifenazate residues.

IV. Other Considerations

A. Analytical Enforcement Methodology

The analytical methods used in the field trial, processing, and ruminant feeding have been adequately validated and are appropriate for data gathering purposes. The following paragraphs pertain to the proposed plant and livestock enforcement methods.

1. *Plant*. The method proposed for enforcement of the plant tolerances

associated with this petition has been adequately radiovalidated and validated by an independent laboratory. The Agency's Analytical Chemistry Laboratory (ACL) is currently doing a Petition Method Validation (PMV). After reviewing the independent validation, EPA believes that the PMV will at most show that relatively minor modifications or revisions may need to be made. The registrant will be required to make any modifications or revisions to the proposed enforcement method resulting from the PMV.

2. *Livestock*. The method proposed for enforcement of the animal product tolerances associated with this petition has been adequately validated by an independent laboratory. The independent laboratory validation study resulted in marginal recoveries for bifenazate (milk and kidney), D3598 (liver), and A1530-sulfate (kidney). A radiovalidation of the method was not undertaken by the registrant, as the total radioactive bifenazate and its metabolite residues were very low for analytical purposes. However, the analytical method used for quantifying residues in animal tissues were satisfactorily validated on freshly spiked matrices. The ACL is currently doing a PMV. After reviewing the independent validation, EPA believes that the PMV will at most show that relatively minor modifications or revisions may need to be made. The registrant will be required to make any modifications or revisions to the proposed enforcement method resulting from the PMV.

3. *Multiresidue method (MRM)*. The registrant submitted data concerning the recovery of bifenazate and D3598 using FDA multiresidue method protocols A, C, D, E, and F (Pesticide Analytical Manual Vol. I). Acceptable results were only attained using Protocol C. These data were forwarded to FDA for inclusion in the Pesticide Analytical Manual I. The tolerance expression for livestock commodities includes A1530 and A1530-sulfate. The registrant should submit information concerning the behavior of these compounds through the FDA multiresidue protocols.

Adequate enforcement methodology (utilizing reversed phase high pressure liquid chromatography (HPLC) and oxidative coulometric electrochemical detection) is available to enforce the tolerance expression. The method may be requested from: Francis Griffith, Analytical Chemistry Branch, Environmental Science Center, Environmental Protection Agency, 701 Mapes Road, Fort George G. Mead, MD 20755–5350; telephone number: (410) 305–2905; e-mail address: griffith.francis@epa.gov. In addition, Mulitresidue Enforcement Method, Protocol C, has been shown to be adequate for enforcing these tolerances.

B. International Residue Limits

There is neither a CODEX proposal, nor Canadian or Mexican limits for residues of bifenazate and D3598 in/on pome fruit, stone fruit, strawberry, hops, cotton, or grape or for resides of bifenazate, D3598, A1530 and A1530-sulfate in/on livestock commodities. Therefore, harmonization is not an issue for this pesticide tolerance.

C. Conditions

The submitted residue chemistry and toxicological studies are adequate for a conditional registration of bifenazate for food uses. There is high confidence in the hazard end points used for human health risk assessment. However, the following data are being required within 2 years time in order to confirm the results of the studies already reviewed by the Agency and/or to complete the database requirements prior to approval of an unconditional registration of bifenazate:

a. Confirmatory method and interference study for proposed plant and livestock enforcement.

b. Radio validation of proposed livestock enforcement method.

c. FDA multi residue methods testing of A1530 and A1530-sulfate.

d. Storage stability data for hops, strawberry, apple juice, and wet apple pomace.

e. Additional peach field trial data.

f. Additional plum field trial data.

g. Additional grape field trial data.

h. Additional cotton field trial data.

i. 28–day inhalation toxicity study. This study was requested by the Agency for further characterization of inhalation risk assessments. Due to the potential for inhalation exposure, there is concern for toxicity by the inhalation route. The 28–day inhalation toxicity study would give a dose and endpoint examined via the route of exposure of concern (i.e., route specific study) and thus would avoid using an oral study and route-to-route extrapolation. The protocol for the existing 90–day inhalation toxicity study (OPPTS 870.3465) should be followed with the exposure (treatment) ending after 28 days, instead of 90 days.

The rationale for not requiring these data before registration of food uses are provided below:

1. *Deficiencies a, b and c*. Adequate analytical methods are available for enforcement purposes. These methods were independently validated and a petition method validation is in progress at the Agency's Analytical Chemistry Laboratory. In addition, a Mulitresidue Enforcement Method, Protocol C, has been shown to be adequate for enforcing these tolerances.

2. *Deficiencies d through h*. The storage interval of almost all commodity samples collected from the field trial and processing have been validated. The storage interval for hops, strawberry, apple juice, and wet apple pomace were not validated as required and are necessary to confirm the submitted residue chemistry data. The Agency concluded that the interval from sampling until analysis was reasonable and will not invalidate the submitted data due to lack of stability of bifenazate residues of concern. For peach, plum, grape and cotton, the requirements are additional field trials to fulfil the geographical distribution and also to confirm the data already submitted and reviewed by the Agency. The crops and number of trials required are peach(2), plum(1), grape(1) and cotton(1).

3. *Deficiency i*. Bifenazate is not acutely toxic by oral, dermal or inhalation routes (Toxicity category IV). Because of low inhalation toxicity, the registrant did not do a subchronic inhalation toxicity and its absence, the Agency used for endpoint selection the oral NOAELs for short-, intermediate- and long-term inhalation exposure risk assessment for this action. To fully characterize the toxicity potential by inhalation route of exposure over long term use of bifenazate, a 28–day inhalation study is required.

V. Conclusion

Therefore, the tolerances are established for combined residues of bifenazate and D3598 (expressed as bifenazate) in or on apple, wet pomace at 1.2 ppm; cattle fat at 0.1 ppm; cotton, undelinted seed at 0.75 ppm; cotton, gin byproducts at 35 ppm; fruit, pome, group at 0.75 ppm; goat fat at 0.1 pm; grape 0.75 ppm; grape, raisin at 1.2 ppm; hog fat at 0.1 ppm; hop, dried cones at 15 ppm; horse fat at 0.1 ppm; nectarine at 1.7 ppm; peach at 1.7 ppm; plum at 0.30 ppm; sheep fat at 0.1 ppm strawberry at 1.5 ppm and combined residues of bifenazate, D3598 (expressed a bifenazate), A1530 and A1530-sulfate (expressed as A1530) in cattle meat at 0.01 ppm; cattle meat byproducts at 0.01 ppm; goat meat at 0.01 ppm; goat meat byproducts at 0.01 ppm; hog meat at 0.01 ppm; hog meat byproducts at 0.01 ppm; horse meat at 0.01 ppm; horse meat byproducts at 0.01 ppm; milk at 0.01 ppm; sheep meat at 0.01 ppm; and sheep meat byproducts at 0.01 ppm.

Some of the tolerance values requested by the registrant in their petition are different from that

determined by the Agency. The differences are due to the following reasons: The registrant requested a group tolerance for stone fruits. This is not appropriate at this time as no field trial data were submitted on cherry and apricot and/or the maximum peach (1.45 ppm) and plum (0.15 ppm) residue varied by a factor > 5x. In the case of undelinted cotton seeds and cotton gin byproducts, the Agency concluded that a higher tolerance of 0.75 ppm and 35 ppm are required as compared with 0.5 ppm and 20 ppm, respectively, for the combined residues of bifenazate and D3598 (expressed as bifenazate) due to the correction factors applied to the percent recoveries of residues for concern in the storage stability study. For meat of cattle, goat, hog, horse and sheep the registrant requested a 0.02 ppm tolerance; however, the Agency concluded that the bifenazate level used in the animal feeding study (maximum theoretical dietary burden) supports only 0.01 ppm for the combined residues of bifenazate, D3598 (expressed as bifenazate), A1530 and A1530-sulfate (expressed as A1530).

VI. Objections and Hearing Requests

Under section 408(g) of the FFDCA, as amended by the FQPA, any person may file an objection to any aspect of this regulation and may also request a hearing on those objections. The EPA procedural regulations which govern the submission of objections and requests for hearings appear in 40 CFR part 178. Although the procedures in those regulations require some modification to reflect the amendments made to the FFDCA by the FQPA of 1996, EPA will continue to use those procedures, with appropriate adjustments, until the necessary modifications can be made. The new section 408(g) provides essentially the same process for persons to ''object'' to a regulation for an exemption from the requirement of a tolerance issued by EPA under new section 408(d), as was provided in the old FFDCA sections 408 and 409. However, the period for filing objections is now 60 days, rather than 30 days.

A. What Do I Need to Do to File an Objection or Request a Hearing?

You must file your objection or request a hearing on this regulation in accordance with the instructions provided in this unit and in 40 CFR part 178. To ensure proper receipt by EPA, you must identify docket control number OPP–301206 in the subject line on the first page of your submission. All requests must be in writing, and must be mailed or delivered to the Hearing Clerk on or before April 2, 2002.

1. *Filing the request*. Your objection must specify the specific provisions in the regulation that you object to, and the grounds for the objections (40 CFR 178.25). If a hearing is requested, the objections must include a statement of the factual issues(s) on which a hearing is requested, the requestor's contentions on such issues, and a summary of any evidence relied upon by the objector (40 CFR 178.27). Information submitted in connection with an objection or hearing request may be claimed confidential by marking any part or all of that information as CBI. Information so marked will not be disclosed except in accordance with procedures set forth in 40 CFR part 2. A copy of the information that does not contain CBI must be submitted for inclusion in the public record. Information not marked confidential may be disclosed publicly by EPA without prior notice.

Mail your written request to: Office of the Hearing Clerk (1900), Environmental Protection Agency, 1200 Pennsylvania Ave., NW., Washington, DC 20460. You may also deliver your request to the Office of the Hearing Clerk in Rm. C400, Waterside Mall, 401 M St., SW., Washington, DC 20460. The Office of the Hearing Clerk is open from 8 a.m. to 4 p.m., Monday through Friday, excluding legal holidays. The telephone number for the Office of the Hearing Clerk is (202) 260–4865.

2. *Tolerance fee payment*. If you file an objection or request a hearing, you must also pay the fee prescribed by 40 CFR 180.33(i) or request a waiver of that fee pursuant to 40 CFR 180.33(m). You must mail the fee to: EPA Headquarters Accounting Operations Branch, Office of Pesticide Programs, P.O. Box 360277M, Pittsburgh, PA 15251. Please identify the fee submission by labeling it ''Tolerance Petition Fees.''

EPA is authorized to waive any fee requirement ''when in the judgement of the Administrator such a waiver or refund is equitable and not contrary to the purpose of this subsection.'' For additional information regarding the waiver of these fees, you may contact James Tompkins by phone at (703) 305–5697, by e-mail at tompkins.jim@epa.gov, or by mailing a request for information to Mr. Tompkins at Registration Division (7505C), Office of Pesticide Programs, Environmental Protection Agency, 1200 Pennsylvania Ave., NW., Washington, DC 20460.

If you would like to request a waiver of the tolerance objection fees, you must mail your request for such a waiver to: James Hollins, Information Resources and Services Division (7502C), Office of Pesticide Programs, Environmental Protection Agency, 1200 Pennsylvania Ave., NW., Washington, DC 20460.

3. *Copies for the Docket*. In addition to filing an objection or hearing request with the Hearing Clerk as described in Unit VI.A., you should also send a copy of your request to the PIRIB for its inclusion in the official record that is described in Unit I.B.2. Mail your copies, identified by docket control number OPP–301206, to: Public Information and Records Integrity Branch, Information Resources and Services Division (7502C), Office of Pesticide Programs, Environmental Protection Agency, 1200 Pennsylvania Ave., NW., Washington, DC 20460. In person or by courier, bring a copy to the location of the PIRIB described in Unit I.B.2. You may also send an electronic copy of your request via e-mail to: opp-docket@epa.gov. Please use an ASCII file format and avoid the use of special characters and any form of encryption. Copies of electronic objections and hearing requests will also be accepted on disks in WordPerfect 6.1/8.0 or ASCII file format. Do not include any CBI in your electronic copy. You may also submit an electronic copy of your request at many Federal Depository Libraries.

B. When Will the Agency Grant a Request for a Hearing?

A request for a hearing will be granted if the Administrator determines that the material submitted shows the following: There is a genuine and substantial issue of fact; there is a reasonable possibility that available evidence identified by the requestor would, if established resolve one or more of such issues in favor of the requestor, taking into account uncontested claims or facts to the contrary; and resolution of the factual issues(s) in the manner sought by the requestor would be adequate to justify the action requested (40 CFR 178.32).

VII. Regulatory Assessment Requirements

This final rule establishes a tolerance under FFDCA section 408(d) in response to a petition submitted to the Agency. The Office of Management and Budget (OMB) has exempted these types of actions from review under Executive Order 12866, entitled *Regulatory Planning and Review* (58 FR 51735, October 4, 1993). Because this rule has been exempted from review under Executive Order 12866 due to its lack of significance, this rule is not subject to Executive Order 13211, *Actions Concerning Regulations That Significantly Affect Energy Supply, Distribution, or Use* (66 FR 28355, May 22, 2001). This final rule does not

contain any information collections subject to OMB approval under the Paperwork Reduction Act (PRA), 44 U.S.C. 3501 *et seq.*, or impose any enforceable duty or contain any unfunded mandate as described under Title II of the Unfunded Mandates Reform Act of 1995 (UMRA) (Public Law 104–4). Nor does it require any special considerations under Executive Order 12898, entitled *Federal Actions to Address Environmental Justice in Minority Populations and Low-Income Populations* (59 FR 7629, February 16, 1994); or OMB review or any Agency action under Executive Order 13045, entitled *Protection of Children from Environmental Health Risks and Safety Risks* (62 FR 19885, April 23, 1997). This action does not involve any technical standards that would require Agency consideration of voluntary consensus standards pursuant to section 12(d) of the National Technology Transfer and Advancement Act of 1995 (NTTAA), Public Law 104–113, section 12(d) (15 U.S.C. 272 note). Since tolerances and exemptions that are established on the basis of a petition under FFDCA section 408(d), such as the tolerance in this final rule, do not require the issuance of a proposed rule, the requirements of the Regulatory Flexibility Act (RFA) (5 U.S.C. 601 *et seq.*) do not apply. In addition, the Agency has determined that this action will not have a substantial direct effect on States, on the relationship between the national government and the States, or on the distribution of power and responsibilities among the various levels of government, as specified in Executive Order 13132, entitled *Federalism*(64 FR 43255, August 10, 1999). Executive Order 13132 requires EPA to develop an accountable process to ensure ''meaningful and timely input by State and local officials in the development of regulatory policies that have federalism implications.'' ''Policies that have federalism implications'' is defined in the Executive Order to include regulations that have ''substantial direct effects on the States, on the relationship between the national government and the States, or on the distribution of power and responsibilities among the various levels of government.'' This final rule directly regulates growers, food processors, food handlers and food retailers, not States. This action does not alter the relationships or distribution of power and responsibilities established by Congress in the preemption provisions of FFDCA section 408(n)(4). For these same reasons, the Agency has determined that this rule does not have any ''tribal implications'' as described in Executive Order 13175, entitled *Consultation and Coordination with Indian Tribal Governments* (65 FR 67249, November 6, 2000). Executive Order 13175, requires EPA to develop an accountable process to ensure ''meaningful and timely input by tribal officials in the development of regulatory policies that have tribal implications.'' ''Policies that have tribal implications'' is defined in the Executive Order to include regulations that have ''substantial direct effects on one or more Indian tribes, on the relationship between the Federal government and the Indian tribes, or on the distribution of power and responsibilities between the Federal government and Indian tribes.'' This rule will not have substantial direct effects on tribal governments, on the relationship between the Federal government and Indian tribes, or on the distribution of power and responsibilities between the Federal government and Indian tribes, as specified in Executive Order 13175. Thus, Executive Order 13175 does not apply to this rule.

VIII. Submission to Congress and the Comptroller General

The Congressional Review Act, 5 U.S.C. 801 *et seq.*, as added by the Small Business Regulatory Enforcement Fairness Act of 1996, generally provides that before a rule may take effect, the agency promulgating the rule must submit a rule report, which includes a copy of the rule, to each House of the Congress and to the Comptroller General of the United States. EPA will submit a report containing this rule and other required information to the U.S. Senate, the U.S. House of Representatives, and the Comptroller General of the United States prior to publication of this final rule in the **Federal Register**. This final rule is not a ''major rule'' as defined by 5 U.S.C. 804(2).

List of Subjects in 40 CFR Part 180

Environmental protection, Administrative practice and procedure, Agricultural commodities, Pesticides and pests, Reporting and record keeping requirements.

Dated: January 15, 2002.

James Jones,

Acting Director, Office of Pesticide Programs.

Therefore, 40 CFR chapter I is amended as follows:

PART 180—[AMENDED]

1. The authority citation for part 180 continues to read as follows:

Authority: 21 U.S.C. 321(q), 346(a) and 371.

2. Section 180.572 is amended by adding text to paragraph (a) to read as follows:

§ 180.572 Bifenazate; tolerances for residues.

(a) *General.* (1) Tolerances are established for combined residues of bifenazate (hydrazinecarboxylic acid, 2-(4-methoxy-1,1'-biphenyl]-3-yl), 1-methylethyl ester) and D3598 expressed as bifenazate (diazinecarboxylic acid, 2-(4-methoxy-1,1'-biphenyl]-3-yl), 1-methylethylester) in or on the following commodities:

Commodity	Parts per million
Apple, wet pomace	1.2
Cattle, fat	0.1
Cotton, gin byproducts	35
Cotton, undelinted seed	0.75
Fruit, pome, group	0.75
Goat, fat	0.1
Grape	0.75
Grape, raisin	1.2
Hog, fat	0.1
Hop, dried cones	15
Horse, fat	0.1
Nectarine	1.7
Peach	1.7
Plum	0.3
Sheep, fat	0.1
Strawberry	1.5

(2) Tolerances are established for combined residues of bifenazate (hydrazinecarboxylic acid, 2-(4-methoxy-1,1'-biphenyl]-3-yl), 1-methylethyl ester) and D3598 expressed as bifenazate (diazinecarboxylic acid, 2-(4-methoxy-[1,1'-biphenyl]-3-yl), 1-methylethylester), A1530 (1,1'-biphenyl, 4-ol) and A1530-sulfate expressed as A1530 (1,1'-biphenyl, 4-oxysulfonic acid) in the following animal commodities:

Commodity	Parts per million
Cattle, meat	0.01
Cattle, meat byproducts	0.01
Goat, meat	0.01
Goat, meat byproducts	0.01
Hog, meat	0.01
Hog, meat byproducts	0.01
Horse, meat	0.01
Horse, meat byproducts	0.01
Milk	0.01
Sheep, meat	0.01
Sheep, meat byproducts	0.01

* * * * *

[FR Doc. 02–2612 Filed 1–31–02; 8:45 am]

BILLING CODE 6560–50–S

GENERAL SERVICES ADMINISTRATION

41 CFR Part 302–11

[FTR Amendment 102]

RIN 3090–AH55

Federal Travel Regulation; Relocation Income Tax (RIT) Allowance Tax Tables

AGENCY: Office of Governmentwide Policy, GSA.

ACTION: Final rule.

SUMMARY: The Federal, State, and Puerto Rico tax tables for calculating the relocation income tax (RIT) allowance must be updated yearly to reflect changes in Federal, State, and Puerto Rico income tax brackets and rates. The Federal, State, and Puerto Rico tax tables contained in this rule are for calculating the 2002 RIT allowance to be paid to relocating Federal employees.

DATES: This final rule is effective January 1, 2002, and applies for RIT allowance payments made on or after January 1, 2002.

FOR FURTHER INFORMATION CONTACT: Calvin L. Pittman, Office of Governmentwide Policy, Travel Management Policy (MTT), Washington, DC 20405, telephone (202) 501–1538.

SUPPLEMENTARY INFORMATION: This amendment provides the tax tables necessary to compute the relocation income tax (RIT) allowance for employees who are taxed in 2002 on moving expense reimbursements.

A. Background

Section 5724b of Title 5, United States Code, provides for reimbursement of substantially all Federal, State, and local income taxes incurred by a transferred Federal employee on taxable moving expense reimbursements. Policies and procedures for the calculation and payment of a RIT allowance are contained in the Federal Travel Regulation (41 CFR part 302–11). The Federal, State, and Puerto Rico tax tables for calculating RIT allowance payments are updated yearly to reflect changes in Federal, State, and Puerto Rico income tax brackets and rates.

B. Executive Order 12866

The General Services Administration (GSA) has determined that this final rule is not a significant regulatory action for the purposes of Executive Order 12866 of September 30, 1993.

C. Regulatory Flexibility Act

This final rule is not required to be published in the **Federal Register** for notice and comment; therefore, the Regulatory Flexibility Act, 5 U.S.C. 601 *et seq.*, does not apply.

D. Paperwork Reduction Act

The Paperwork Reduction Act does not apply because this final rule does not impose recordkeeping or information collection requirements, or the collection of information from offerors, contractors, or members of the public which require the approval of the Office of Management and Budget under 44 U.S.C. 3501 *et seq.*

E. Small Business Regulatory Enforcement Fairness Act

This final rule is also exempt from Congressional review prescribed under 5 U.S.C. 801 since it relates solely to agency management and personnel.

List of Subjects in 41 CFR Part 302–11

Government employees, Income taxes, Relocation allowances and entitlements, Transfers, Travel and transportation expenses.

For the reasons set forth in the preamble, 41 CFR part 302–11 is amended as follows:

PART 302—RELOCATION INCOME TAX (RIT) ALLOWANCE

1. The authority citation for 41 CFR part 302–11 continues to read as follows:

Authority: 5 U.S.C. 5738; 20 U.S.C. 905(a); E.O. 11609, 36 FR 13747, 3 CFR, 1971–1975 Comp., p. 586.

2. Appendixes A, B, C, and D to part 302–11 currently in effect are amended by adding the following tables at the end of each appendix, respectively, to read as follows:

Appendix A to Part 302–11—Federal Tax Tables for RIT Allowance

* * * * * * *

Federal Marginal Tax Rates by Earned Income Level and Filing Status—Tax Year 2001

The following table is to be used to determine the Federal marginal tax rate for Year 1 for computation of the RIT allowance as prescribed in § 302–11.8(e)(1). The following table is to be used for employees whose Year 1 occurred during calendar year 2001:

Marginal Tax Rate	Single Taxpayer		Heads of Household		Married Filing Jointly/Qualifying Widows & Widowers		Married Filing Separately	
Percent	Over	But Not Over	Over	But Not Over	Over	But Not Over	Over	But Not Over
15	$7,582	$35,363	$13,905	$51,016	$18,061	$65,011	$8,742	$32,028
28	35,363	77,472	51,016	116,612	65,011	133,818	32,028	65,470
31	77,472	154,524	116,612	180,660	133,818	193,566	65,470	99,363
36	154,524	317,548	180,660	324,522	193,566	323,455	99,363	169,100
39.6	317,548	.....	324,522	.....	323,455	.....	169,100	.....

Appendix B to Part 302–11—State Tax Tables for RIT Allowance

* * * * *

State Marginal Tax Rates by Earned Income Level—Tax Year 2001

The following table is to be used to determine the State marginal tax rates for calculation of the RIT allowance as prescribed in § 301–11.8(e)(2). The following table is to be used for employees who received covered taxable reimbursements during calendar year 2001:

Marginal tax rates (stated in percents) for the earned income amounts specified in each column.[1] [2]				
State (or District)	$20,000–$24,999	$25,000–$49,999	$50,000–$74,999	$75,000 & Over
Alabama	5	5	5	5
Alaska	0	0	0	0
Arizona	2.87	3.2	3.74	5.04
Arkansas	4.5	7	7	7
If single status [3]	6	7	7	7
California	2	4	8	9.3
If single status [4]	4	8	8	9.3
Colorado	4.63	4.63	4.63	4.63
Connecticut	4.5	4.5	4.5	4.5
Delaware	5.2	5.55	5.95	5.95
District of Columbia	7.5	9.5	9.5	9.5
Florida	0	0	0	0
Georgia	6	6	6	6
Hawaii	6.9	7.9	8.5	8.5
If single status [3]	7.9	8.5	8.5	8.5
Idaho	7.4	7.8	7.8	7.8
Illinois	3	3	3	3
Indiana	3.4	3.4	3.4	3.4
Iowa	6.48	7.92	8.98	8.98
If single status [3]	6.8	7.92	8.98	8.98
Kansas	3.5	6.25	6.25	6.45
If single status [3]	6.25	6.45	6.45	6.45
Kentucky	6	6	6	6
Louisiana	2	4	4	6
If single status [3]	4	4	6	6
Maine	4.5	7	8.5	8.5
If single status [3]	7	8.5	8.5	8.5
Maryland	4.8	4.8	4.8	4.8
Massachusetts	5.85	5.85	5.85	5.85
Michigan	4.2	4.2	4.2	4.2
Minnesota	5.36	7.05	7.05	7.85
If single status [3]	7.05	7.05	7.05	7.85
Mississippi	5	5	5	5
Missouri	6	6	6	6
Montana	9	10	11	11
Nebraska	3.49	5.01	6.68	6.68
If single status [3]	5.01	6.68	6.68	6.68
Nevada	0	0	0	0
New Hampshire	0	0	0	0
New Jersey	1.4	1.75	2.45	6.37
If single status [3]	1.4	3.5	5.525	6.37
New Mexico	3.2	6	7.1	8.2
If single status [3]	6	7.1	7.9	8.2
New York	4	5.25	6.85	6.85
If single status [3]	5.25	6.85	6.85	6.85
North Carolina	6	7	7	7.75
North Dakota	6.67	9.33	12	12
If single status [3]	8	10.67	12	12
Ohio	3.715	4.457	5.201	6.9
Oklahoma	5	6.75	6.75	6.75
If single status [3]	6.75	6.75	6.75	6.75
Oregon	9	9	9	9
Pennsylvania	2.8	2.8	2.8	2.8
Rhode Island [4]	25.5	25.5	25.5	25.5
South Carolina	7	7	7	7
South Dakota	0	0	0	0
Tennessee	0	0	0	0
Texas	0	0	0	0
Utah	7	7	7	7
Vermont [5]	24	24	24	24
Virginia	5	5.75	5.75	5.75
Washington	0	0	0	0
West Virginia	4	4.5	6	6.5
Wisconsin	6.5	6.75	6.75	6.75
Wyoming	0	0	0	0

[1] Earned income amounts that fall between the income brackets shown in this table (e.g., $24,999.45, $49,999.75) should be rounded to the nearest dollar to determine the marginal tax rate to be used in calculating the RIT allowance.

[2] If the earned income amount is less than the lowest income bracket shown in this table, the employing agency shall establish an appropriate marginal tax rate as provided in § 302–11.8(e)(2)(ii).

[3] This rate applies only to those individuals certifying that they will file under a single status within the States where they will pay income taxes. All other taxpayers, regardless of filing status, will use the other rate shown.

[4] The income tax rate for Rhode Island is 25.5 percent of Federal income tax liability for all employees. Rates shown as a percent of Federal income tax liability must be converted to a percent of income as provided in § 302–11.8(e)(2)(iii).

[5] The income tax rate for Vermont is 24 percent of Federal income tax liability for all employees. Rates shown as a percent of Federal income tax liability must be converted to a percent of income as provided in § 302–11.8(e)(2)(iii).

Appendix C to Part 302–11—Federal Tax Tables for RIT Allowance—Year 2

* * * * * * *

Federal Marginal Tax Rates by Earned Income Level and Filing Status—Tax Year 2002

The following table is to be used to determine the Federal marginal tax rate for Year 2 for computation of the RIT allowance as prescribed in § 302–11.8(e)(1). The following table is to be used for employees whose Year 1 occurred during calendar years 1992, 1993, 1994, 1995, 1996, 1997, 1998, 1999, 2000 or 2001:

Marginal tax rate Percent	Single Taxpayer		Heads of Household		Married Filing Jointly/Qualifying Widows & Widowers		Married filing separately	
	Over	But not over	Over	But not over	Over	But not over	Over	But not over
10	$8,137	$14,130	$14,743	$24,811	$20,219	$31,833	$11,770	$16,693
15	14,130	37,040	24,811	53,556	31,833	67,914	16,693	33,839
27	37,040	80,140	53,556	118,624	67,914	139,528	33,839	69,420
30	80,140	158,281	118,624	184,826	139,528	201,236	69,420	105,672
35	158,281	326,339	184,826	337,037	201,236	335,297	105,672	178,317
38.6	326,339	.....	337,037	.....	335,297	.....	178,317	.....

Appendix D to Part 302–11—Puerto Rico Tax Tables for RIT Allowance

* * * * * * *

Puerto Rico Marginal Tax Rates by Earned Income Level—Tax Year 2001

The following table is to be used to determine the Puerto Rico marginal tax rate for computation of the RIT allowance as prescribed in § 302–11.8(e)(4)(i):

Marginal Tax Rate Percent	Single Filing Status		Any Other Filing Status	
	Over	But Not Over	Over	But Not Over
11	.....	.....	.....	$25,000
16.5	.....	$25,000	.....	.....
29.5	$25,000	50,000	$25,000	50,000
33	50,000	.....	50,000	.....

Dated: January 25, 2002.

Stephen A. Perry,

Administrator of General Services.

[FR Doc. 02–2431 Filed 1–31–02; 8:45 am]

BILLING CODE 6820–34–P

Proposed Rules

Federal Register
Vol. 67, No. 22
Friday, February 1, 2002

This section of the FEDERAL REGISTER contains notices to the public of the proposed issuance of rules and regulations. The purpose of these notices is to give interested persons an opportunity to participate in the rule making prior to the adoption of the final rules.

DEPARTMENT OF AGRICULTURE

Agricultural Marketing Service

7 CFR Part 29

[Docket No. TB–02–03]

Tobacco Inspection; Producer Referenda on Mandatory Grading

AGENCY: Agricultural Marketing Service, USDA.

ACTION: Proposed rule.

SUMMARY: This proposed rule would establish procedures for referenda among producers of each kind of tobacco that is eligible for price support to determine whether they favor the mandatory grading of that kind of tobacco. Currently, tobacco that is not sold at auction is not subject to mandatory grading.

DATES: Written comments on this proposed rule must be received on or before February 11, 2002.

ADDRESSES: Send comments to John P. Duncan III, Deputy Administrator, Tobacco Programs, Agricultural Marketing Service (AMS), United States Department of Agriculture (USDA), STOP 0280, 1400 Independence Avenue, SW., Washington, DC 20250–0280. Comments will be available for public inspection at this location during regular business hours between 8 AM and 4:30 PM, Monday through Friday, except holidays.

FOR FURTHER INFORMATION CONTACT: John P. Duncan III, Deputy Administrator, Tobacco Programs, AMS, USDA, STOP 0280, 1400 Independence Avenue, SW., Washington, DC 20250–0280; telephone number (202) 205–0567.

SUPPLEMENTARY INFORMATION: Section 759 of the Agriculture, Rural Development, Food and Drug Administration, and Related Agencies Appropriations Act for 2002 (Pub. L. 107–76) (Appropriations Act) requires USDA to conduct referenda among producers of each kind of tobacco that is eligible for price support under the Agricultural Act of 1949 (7 U.S.C. 1421 *et seq.*) to determine whether a majority of producers of a kind of tobacco voting in the referendum favor the mandatory grading of that kind of tobacco. The referenda should be conducted by March 31, 2002. If a majority of the producers voting in a referendum favor the mandatory grading of that kind, USDA is directed to ensure that the kind of tobacco is graded at the time of sale for the 2002 and subsequent marketing years. The USDA is also directed to establish user fees for any such inspections. To the maximum extent practicable, these fees would be established in the same manner as user fees for the grading of tobacco sold at auction authorized under the Tobacco Inspection Act (7 U.S.C. 511 *et seq.*). Regulations for tobacco inspection, including fees and charges, appear in subpart B of 7 CFR part 29.

This proposed rule would establish procedures for conducting the producer referenda. Provisions are included for the method of conducting the referendum, eligibility for voting, a one vote limitation, form and distribution of ballots, filing and tabulation of ballots, and confidentiality. As provided for in the Appropriations Act, separate referenda would be conducted among the producers of each kind of tobacco eligible for price support. These kinds are flue-cured tobacco, types 11, 12, 13, 14; Kentucky-Tennessee fire-cured tobacco, types 22 and 23; Virginia fire-cured tobacco, type 21; Virginia sun-cured tobacco, type 37; dark air-cured tobacco, types 35 and 36; burley tobacco, type 31; and cigar filler and binder tobacco, types 42, 43, 53, 54, and 55, as set forth at 7 CFR part 1464.2.

Producers of each kind of tobacco would be eligible to vote in the referendum for that kind. Under USDA's price support program, periodic referenda are conducted among producers of specific commodities, including tobacco, to determine whether they favor the continuation of quotas. Voting eligibility is governed by 7 CFR 717.3. This proposed rule would to a great extent follow those provisions as they apply to tobacco producers and would determine eligibility to vote in the same or similar way. In general, the persons eligible to vote in a referendum for a particular kind of tobacco would be the farmers engaged in the production of the crop of such tobacco harvested in the immediately preceding crop-year prior to the holding of the referendum. This would include any person who is entitled to share in a crop of the commodity, or the proceeds thereof because he or she shares in the risks of production of the crop as an owner, landlord, tenant, or sharecropper, but would not include a landlord whose return from the crop is fixed regardless of the amount of the crop produced.

This rule proposes to administer the Appropriations Act requirements in accordance with USDA voting procedures with which the affected producers are familiar. The AMS Mandatory Grading Referenda program, producer eligibility, and procedural requirements will be governed by 7 CFR part 717, Holding of Referenda, and the definitions contained in sections 718.2 and 723.104 of that same chapter which govern USDA, Farm Service Agency (FSA) referenda for tobacco producer quotas. This avoids development of redundant requirements, besides, quota holders are familiar with these procedures. A copy of these regulations, a referendum ballot, and voting procedures are available for review in any USDA Service Center.

Executive Order 12866 and 12988

This proposed rule has been determined to be not significant for purposes of Executive Order 12866, and, therefore, has not been reviewed by the Office of Management and Budget.

This rule has been reviewed under Executive Order 12988, Civil Justice Reform. This action is not intended to have retroactive effect. The rule will not exempt any State or local laws, regulations, or policies, unless they present an irreconcilable conflict with this rule. There are no administrative procedures which must be exhausted prior to any judicial challenge to the provisions of this rule.

Regulatory Flexibility Act

In conformance with the provisions of the Regulatory Flexibility Act (5 U.S.C. 601 *et seq.*), consideration has been given to the potential economic impact upon small business. There are approximately 450,000 tobacco producers who would be eligible to vote in the referenda. Pursuant to criteria established under the Regulatory Flexibility Act, most of the tobacco producers would be considered small entities. This rule will not substantially

affect tobacco growers. Voting in the referendum is voluntary. As discussed in the following section on the Paperwork Reduction Act, the public reporting burden is minimal, an estimated 5 minutes per response. Voting will be conducted by mail. The overall impact of this proposed rule should be minimal on tobacco growers because this rule provides for referenda procedures only and relies on, to a great extent, existing procedures. Accordingly, it has been determined that this rule will not have a significant economic impact on a substantial number of small entities.

A comment period of 10 days is provided for this proposed rule. This period of time is deemed appropriate because the regulations should be in place to conduct the referenda by March 31, 2002, and also there should be sufficient time to make mailing lists to send ballots to producers eligible to vote.

Paperwork Reduction Act

The information collections proposed by this rule will be carried out using the referenda procedures of the Farm Service Agency and Form FSA MQ–5, Referendum Ballot. This rule will add no additional burden to that currently approved by OMB and assigned OMB Control Number 0560–0182 under the provisions of the Paperwork Reduction Act of 1995 (44 U.S.C. 35).

List of Subjects in 7 CFR Part 29

Administrative practices and procedures, Advisory committees, Government publications, Imports, Pesticides and pests, Reporting and recordkeeping procedures, Tobacco.

For the reasons set forth in the preamble, 7 CFR Part 29 is proposed to be amended as follows:

PART 29—TOBACCO INSPECTION

Subpart B—Regulations

1. The authority citation for subpart B is revised to read as follows:

Authority: 7 U.S.C. 511m and 511r. Section 29.74a is also issued under sec. 759, Pub. L. 107–76, 115 Stat. 741 (7 U.S.C. 511s).

2. A new § 29.74a is added to read as follows:

§ 29.74a Producer Referenda on Mandatory Grading.

(a)(1) *Method of conducting.* Referenda shall be conducted among producers persons who were engaged in the production of the following types of tobacco harvested in the immediately preceding crop year: Flue-cured tobacco, types 11, 12, 13, 14; Kentucky-Tennessee fire-cured tobacco, types 22 and 23; Virginia fire-cured tobacco, type 21; Virginia sun-cured tobacco, type 37; dark air-cured tobacco, types 35 and 36; burley tobacco, type 31; and cigar filler and binder tobacco, types 42, 43, 53, 54, and 55. A referendum will be conducted for each kind of tobacco and the results will apply to each individual kind. A producer is eligible to vote in referenda for each kind of tobacco they produce.

(2) *Farmers engaged in the production of tobacco.* For purposes of the referenda, persons engaged in the production of tobacco includes any person who is entitled to share in a crop of the tobacco or the proceeds thereof because he or she shares in the risks of production of the crop as an owner, landlord, tenant, or sharecropper (a landlord whose return from the crop is fixed regardless of the amount of the crop produced is excluded) on a farm on which such crop is planted in a workmanlike manner for harvest: Provided, That any failure to harvest the crop because of conditions beyond the control of such person shall not affect his or her status as a person engaged in the production of the crop. In addition, persons engaged in the production of tobacco also includes each person who it is determined would have had an interest as a producer in the crop on a farm for which a farm allotment under the quota program (7 CFR part 723, subpart B) for the crop was established and no acreage of the crop was planted but an acreage of the crop was regarded as planted for history acreage purposes under the applicable Farm Service Agency commodity regulations of the Department of Agriculture.

(3) *One vote limitation.* Each person eligible to vote in a particular referendum shall be entitled to only one vote in such referendum regardless of the number of farms in which such person is interested or the number of communities, counties, or States in which farms are located in which farms such person is interested: Provided, That:

(i) The individual members of a partnership shall each be entitled to one vote, but the partnership as an entity shall not be entitled to vote;

(ii) An individual eligible voter shall be entitled to one vote even though he or she is interested in an entity (including but not limited to a corporation) which entity is also eligible to vote;

(iii) A person shall also be entitled to vote in each instance of his or her capacity as a fiduciary (including but not limited to a guardian, administrator, executor or trustee) if in such fiduciary capacity he or she is eligible to vote but the person for whom he or she acts as a fiduciary shall not be eligible to vote.

(4) *Joint and family interest.* Where several persons, such as members of a family, have participated or will participate in the production of tobacco under the same lease or cropping agreement, only the person or persons who signed the lease or agreement, or agreed to an oral lease or agreement, shall be eligible to vote. Where two or more persons have produced or will produce tobacco as joint tenants, tenants in common, or owners of community property, each such person shall be entitled to one vote if otherwise eligible. The eligibility of one spouse does not affect the eligibility of the other spouse.

(5) *Minors.* A minor shall be entitled to one vote if he or she is otherwise eligible and is 18 years of age or older when he or she votes.

(6) *Interpretation.* In the case of tobacco on a farm where no acreage of tobacco is actually planted but an acreage of the commodity is regarded as planted under applicable regulations of the Department of Agriculture, persons on the farm who it is determined would have had an interest in the commodity as a producer if an acreage of the commodity had been actually planted shall be eligible to vote in the referendum.

(b) *Referenda Procedures.* See part 717 of this chapter for eligibility criteria and the procedures to be used in carrying out mandatory grading referenda. Where not inconsistent with this part, the definitions contained in parts 717, 718 and 723 will govern administration of these referenda. A copy of these regulations, a referendum ballot, and voting procedures are available for review in any USDA Service Center.

Dated: January 28, 2002.

A.J. Yates,

Administrator, Agricultural Marketing Service.

[FR Doc. 02–2403 Filed 1–29–02; 3:18 pm]

BILLING CODE 3410–02–P

DEPARTMENT OF AGRICULTURE

Animal and Plant Health Inspection Service

9 CFR Part 94

[Docket No. 01–041–1]

Change in Disease Status of Estonia With Regard to Rinderpest and Foot-and-Mouth Disease

AGENCY: Animal and Plant Health Inspection Service, USDA.

ACTION: Proposed rule.

SUMMARY: We are proposing to amend the regulations to add Estonia to the list of regions that are considered free of rinderpest and foot-and-mouth disease. We are taking this action because we have determined that Estonia is free of rinderpest and foot-and-mouth disease. We are also proposing to add Estonia to the list of regions that are subject to certain import restrictions on meat and meat products because of their proximity to or trading relationships with rinderpest-or foot-and-mouth disease-affected countries. These actions would update the disease status of Estonia with regard to rinderpest and foot-and-mouth disease while continuing to protect the United States from an introduction of those diseases by providing additional requirements for any meat and meat products imported into the United States from Estonia.

DATES: We invite you to comment on this docket. We will consider all comments we receive that are postmarked, delivered, or e-mailed by April 2, 2002.

ADDRESSES: You may submit comments by postal mail/commercial delivery or by e-mail. If you use postal mail/commercial delivery, please send four copies of your comment (an original and three copies) to: Docket No. 01–041–1, Regulatory Analysis and Development, PPD, APHIS, Station 3C71, 4700 River Road Unit 118, Riverdale, MD 20737–1238. Please state that your comment refers to Docket No. 01–041–1. If you use e-mail, address your comment to *regulations@aphis.usda.gov*. Your comment must be contained in the body of your message; do not send attached files. Please include your name and address in your message and ''Docket No. 01–041–1'' on the subject line.

You may read any comments that we receive on this docket in our reading room. The reading room is located in room 1141 of the USDA South Building, 14th Street and Independence Avenue SW., Washington, DC. Normal reading room hours are 8 a.m. to 4:30 p.m., Monday through Friday, except holidays. To be sure someone is there to help you, please call (202) 690–2817 before coming.

APHIS documents published in the **Federal Register**, and related information, including the names of organizations and individuals who have commented on APHIS dockets, are available on the Internet at *http://www.aphis.usda.gov/ppd/rad/webrepor.html*.

FOR FURTHER INFORMATION CONTACT: Dr. Hatim Gubara, Staff Veterinarian, Regionalization Evaluation Services Staff, VS, APHIS, 4700 River Road Unit 38, Riverdale, MD 20737–1231; (301) 734–5875.

SUPPLEMENTARY INFORMATION:

Background

The regulations in 9 CFR part 94 (referred to below as the regulations) govern the importation of certain animals and animal products into the United States in order to prevent the introduction of various diseases, including rinderpest, foot-and-mouth disease (FMD), African swine fever, hog cholera, and swine vesicular disease. These are dangerous and destructive communicable diseases of ruminants and swine. Section 94.1 of the regulations lists regions of the world that are declared free of rinderpest or free of both rinderpest and FMD. Rinderpest or FMD exists in all other parts of the world not listed. Section 94.11 of the regulations lists regions of the world that have been determined to be free of rinderpest and FMD, but that are subject to certain restrictions because of their proximity to or trading relationships with rinderpest-or FMD-affected regions.

In June 1999, the Animal and Plant Health Inspection Service (APHIS) received a request from Estonia's Veterinary and Food Board to recognize Estonia as free of FMD. In response to that request, and based on our review of supporting documentation accompanying the request and information obtained during a site visit, we are proposing to recognize Estonia as free of FMD. In addition, because rinderpest has never been diagnosed in Estonia and is not endemic to that region of the world, we are also proposing to recognize Estonia as free of rinderpest. Finally, we are proposing to add Estonia to the list of rinderpest- and FMD-free regions whose exports of ruminant and swine meat and products to the United States are subject to certain restrictions to ensure against the introduction of those diseases into this country.

Based on the information submitted to us by the Government of Estonia, we have reviewed and analyzed the animal health status of Estonia relative to FMD. Our review and analysis were conducted in light of the factors identified in 9 CFR 92.2, ''Application for recognition of the animal health status of a region,'' which are used to determine the level of risk associated with importing animals or animal products into the United States from a given region. Based on the information submitted to us, we have concluded the following:

Veterinary infrastructure. The veterinary services authorities in Estonia have the legal authority, organization, and infrastructure to detect, control, and eradicate FMD. Estonia's veterinary services are organized under the Veterinary and Food Board and include approximately 209 authorized veterinarians employed by the government, 841 private veterinarians, 43 laboratory veterinarians, and a number of trained technicians. Authorized veterinarians are distributed among 15 districts within Estonia, each of which falls under the supervision of a District Veterinary Officer (DVO). Each DVO reports directly to the Director General of the Central Veterinary Office. In the event of an animal disease emergency, the Minister of Agriculture delegates authority to the Veterinary and Food Board to implement control measures. The Veterinary and Food Board has the authority to call on private veterinary practitioners, police, and local authorities to provide support to the Central Veterinary Office in depopulating infected premises, disposing of animal carcasses, and controlling and restricting animal movements.

Disease history and surveillance. The last outbreak of FMD in Estonia occurred in 1982 and was traced to its origin in Latvia. Although Estonia has been declared free of FMD by the Office of International des Epizooties (OIE), an active surveillance program continues to be carried out by the Government of Estonia through the testing and monitoring of all herds for FMD.

Diagnostic capabilities. Estonia has the authority, personnel, and diagnostic capabilities to test herds for, and diagnose, FMD. Government-operated laboratories in Estonia work in close contact with international laboratories to confirm diagnoses and type-specific foreign animal pathogens.

Vaccination status. Vaccination against FMD is neither permitted nor practiced in Estonia. Emergency vaccination against FMD may be undertaken at the discretion of the Minister of Agriculture in the event of a risk of an extensive outbreak of the disease. Emergency vaccination against FMD was last implemented during the outbreak of FMD in 1982.

Disease status of adjacent regions. Estonia shares land borders with Latvia and Russia, neither of which is recognized by APHIS as being free of FMD. Estonia is also located south of Finland across the Baltic Sea and the

Gulf of Finland. Finland is recognized by APHIS as being free of FMD.

Degree of separation from adjacent regions. Estonia is sufficiently separated from regions of higher risk by numerous lakes and extensive forest and woodland areas located throughout the country.

Movement across borders. The movement of animals and animal products into Estonia from regions of higher disease risk is strictly controlled. Estonia has 20 animal inspection border posts located in Estonia with a veterinarian on duty at each to perform health examinations of live animals and inspect animal products. All live animals and animal products imported into Estonia require an animal health permit issued by a DVO.

Estonia does not permit the importation of live animals from Latvia, and does not permit the importation of live animals or animal products from Russia. Competition horses, however, are allowed to enter Estonia from Latvia and Russia when accompanied by the appropriate transit permits and health certificates.

Livestock demographics and marketing practices. Estonia has a total of 271,883 head of cattle, 304,000 pigs, 21,250 sheep, 1,116 goats, 2.43 million poultry, and 5,100 horses. The DVOs maintain an adequate system for identifying and tracking cattle and swine herds. There is no known feature of livestock production in the country that increases the risk of disease spread.

Detection and eradication of disease. FMD is a compulsorily notifiable disease in Estonia. The veterinary services in Estonia possess the authority, diagnostic capability, and personnel to rapidly detect, contain, and eradicate any incursion of FMD that might occur.

These findings are described in further detail in a qualitative evaluation that may be obtained by contacting the person listed under **FOR FURTHER INFORMATION CONTACT**. This evaluation may also be viewed on the Internet at *http://www.aphis.usda.gov/vs/reg-request.html* by following the link for current requests and supporting documentation. The qualitative evaluation documents the factors that have led us to conclude that Estonia is free of FMD. As noted previously, rinderpest has never occurred in Estonia and is not endemic to Eastern Europe. Therefore, we are proposing to recognize Estonia as free of rinderpest and FMD and add the country to the list in § 94.1(a)(2) of regions that are considered free of rinderpest and FMD.

These proposed actions would relieve certain restrictions due to FMD and rinderpest on the importation into the United States of certain live animals and animal products from Estonia. However, because Estonia shares common land borders with countries not considered free of rinderpest and FMD, the importation of meat and other products from ruminants and swine into the United States from Estonia would continue to be subject to certain restrictions.

Specifically, we are proposing to add Estonia to the list in § 94.11(a) of regions declared free of rinderpest and FMD but that are subject to special restrictions on the importation of their meat and other animal products into the United States. The regions listed in § 94.11(a) are subject to these special restrictions because they: (1) Supplement their national meat supply by importing fresh (chilled or frozen) meat of ruminants or swine from regions that are designated in § 94.1(a) as regions where rinderpest or FMD exists, (2) have a common land border with regions where rinderpest or FMD exists, or (3) import ruminants or swine from regions where rinderpest or FMD exists under conditions less restrictive than would be acceptable for importation into the United States.

Estonia has common land borders with countries not considered free of FMD. As a result, there is some risk that the meat and other animal products produced by Estonia could be commingled with the fresh (chilled or frozen) meat of animals from a region in which FMD exists and present an undue risk of introducing FMD into the United States if imported without restriction.

Under § 94.11, meat and other animal products of ruminants and swine, including ship stores, airplane meals, and baggage containing these meat or animal products, may not be imported into the United States except in accordance with § 94.11 and the applicable requirements of the USDA's Food Safety and Inspection Service at 9 CFR chapter III.

Section 94.11 generally requires that the meat and other animal products of ruminants and swine be: (1) Prepared in an inspected establishment that is eligible to have its products imported into the United States under the Federal Meat Inspection Act; and (2) accompanied by an additional certificate, issued by a full-time salaried veterinary official of the national government of the exporting region, assuring that the meat or other animal products have not been commingled with or exposed to meat or other animal products originating in, imported from, transported through, or that have otherwise been in a region where rinderpest or FMD exists.

Executive Order 12866 and Regulatory Flexibility Act

This proposed rule has been reviewed under Executive Order 12866. For this action, the Office of Management and Budget has waived its review process required by Executive Order 12866.

We are proposing to amend the regulations by adding Estonia to the list of regions that are considered free of rinderpest and FMD. We are taking this action because we have determined that Estonia is free of rinderpest and FMD. We are also proposing to add Estonia to the list of regions that are subject to certain restrictions because of their proximity to or trading relationships with rinderpest-or FMD-affected countries. These actions would update the disease status of Estonia with regard to rinderpest and FMD while continuing to protect the United States from an introduction of those diseases by providing additional requirements for any meat and meat products imported into the United States from Estonia.

The following analysis addresses the potential economic effects of this proposed rule on small entities, as required by the Regulatory Flexibility Act.

Currently, Estonia is not included in the list of regions that are considered free of rinderpest and FMD. This proposal would add Estonia to the list of regions that are considered free of rinderpest and FMD and add the country to the list of regions subject to certain restrictions because of their proximity to or trading relationships with rinderpest-or FMD-affected countries. This proposed rule would allow for the importation into the United States of ruminants and swine and any fresh (chilled or frozen) meat or other products of any ruminant or swine from Estonia under certain restrictions.

We do not expect that this proposed rule would have a significant economic impact on any entities, large or small, in the United States. Estonia does not produce sufficient quantities of ruminants or swine, or products of ruminants or swine, to significantly affect the U.S. market even if all of Estonia's production were exported to the United States.[1] For example, Estonia's production of beef and veal, mutton and lamb, and pigmeat (51,120 metric tons) was equivalent to less than 0.5 percent of those commodities produced in the United States in 2001. During the same period, Estonia's stock

[1] Realistically, not all of Estonia's production would be exported to the United States. Some of Estonia's production would be consumed domestically and some would be exported to countries other than the United States.

of live cattle, sheep, and pigs (585,200 head) was equivalent to less than 0.5 percent of comparable stock in the United States. Similarly, Estonia's milk production (690,000 metric tons) was less than 1 percent of the total production of milk in the United States in 2001.[2]

Small Entity Impact

The Regulatory Flexibility Act requires that agencies consider the economic effects of their rules on small entities. Given the small amount of Estonia's production, domestic producers in the United States are unlikely to be affected in any measurable way. Other entities that might be affected are brokers, agents, and others in the United States who would become involved in any future importation and sale of ruminants or swine or products of ruminants or swine from Estonia. The number and size of those entities is unknown, but it is reasonable to assume that most of those entities would be small according to the standards set by the U.S. Small Business Administration. However, for the reasons discussed above, any economic impact on those entities, as well as any other affected entities in the United States, should be minimal.

Under these circumstances, the Administrator of the Animal and Plant Health Inspection Service has determined that this action would not have a significant economic impact on a substantial number of small entities.

Executive Order 12988

This proposed rule has been reviewed under Executive Order 12988, Civil Justice Reform. If this proposed rule is adopted: (1) All State and local laws and regulations that are inconsistent with this rule will be preempted; (2) no retroactive effect will be given to this rule; and (3) administrative proceedings will not be required before parties may file suit in court challenging this rule.

Paperwork Reduction Act

This proposed rule contains no information collection or recordkeeping requirements under the Paperwork Reduction Act of 1995 (44 U.S.C. 3501 *et seq.*).

List of Subjects in 9 CFR Part 94

Animal disease, Imports, Livestock, Meat and meat products, Milk, Poultry and poultry products, Reporting and recordkeeping requirements.

Accordingly, we propose to amend 9 CFR part 94 as follows:

[2] Source: Food and Agriculture Organization of the United Nations.

PART 94—RINDERPEST, FOOT-AND-MOUTH DISEASE, FOWL PEST (FOWL PLAGUE), EXOTIC NEWCASTLE DISEASE, AFRICAN SWINE FEVER, HOG CHOLERA, AND BOVINE SPONGIFORM ENCEPHALOPATHY: PROHIBITED AND RESTRICTED IMPORTATIONS

1. The authority citation for part 94 would continue to read as follows:

Authority: 7 U.S.C. 450, 7711, 7712, 7713, 7714, 7751, and 7754; 19 U.S.C. 1306; 21 U.S.C. 111, 114a, 134b, 134c, 134f, 136, and 136a; 31 U.S.C. 9701; 42 U.S.C. 4331 and 4332; 7 CFR 2.22, 2.80, and 371.4.

§ 94.1 [Amended]

2. In § 94.1, paragraph (a)(2) would be amended by adding, in alphabetical order, the word ''Estonia,''.

§ 94.11 [Amended]

3. In 94.11, paragraph (1), the first sentence would be amended by adding, in alphabetical order, the word ''Estonia,''.

Done in Washington, DC, this 28th day of January 2002.

W. Ron DeHaven,

Acting Administrator, Animal and Plant Health Inspection Service.

[FR Doc. 02–2493 Filed 1–31–02; 8:45 am]

BILLING CODE 3410–34–U

DEPARTMENT OF THE TREASURY

Customs Service

19 CFR Parts 24, 123, 132, and 142

RIN 1515–AC92

Procedures Governing the Border Release Advanced Screening and Selectivity (BRASS) Program

AGENCY: Customs Service, Treasury.

ACTION: Notice of proposed rulemaking.

SUMMARY: This document proposes to amend the Customs Regulations to provide for the Border Release Advanced Screening and Selectivity (BRASS) Program, an improved automated and electronic system that will replace the Line Release method of processing certain repetitive and high volume shipments of merchandise into the U.S. Like the present Line Release Program, the proposed BRASS Program will continue to provide for the expedited processing, through the use of computers and bar-code technology, of certain high-volume, repetitively-shipped merchandise that is imported at designated locations. The proposed BRASS Program regulations also will provide for the centralized processing of applications for BRASS processing privileges, and afford administrative appeal rights to applicants who are denied participation in the BRASS Program and to participants whose BRASS processing privileges are subsequently revoked.

DATES: Comments must be received on or before April 2, 2002.

ADDRESSES: Written comments may be addressed to, and inspected at, U.S. Customs Service, Office of Regulations and Rulings—Regulations Branch, 1300 Pennsylvania Avenue, NW., Washington, DC 20229.

FOR FURTHER INFORMATION CONTACT: Enrique S. Tamayo, Office of Field Operations, Trade Programs, Cargo Release Branch; (202) 927–3112.

SUPPLEMENTARY INFORMATION:

Background

In 1992, Customs amended the Customs Regulations at part 142 (19 CFR part 142), which pertains to the entry process, to add a new subpart D to provide for the Line Release method of processing certain shipments of merchandise entering the U.S. *See,* T.D. 92–93. Line Release is an automated system designed to release and track, through the use of personal computers and bar-code technology, shipments of merchandise deemed by Customs to be repetitive and high-volume and that are imported at designated locations. Line Release was implemented as a Disc Operating System (DOS)-based program that interfaces with the Automated Commercial System (ACS). In 1999, the use of Line Release at certain high-risk locations along the land borders of the U.S. for shipments was conditioned on the imported merchandise being transported by carriers that participated in the Land Border Carrier Initiative Program (LBCIP). *See,* T.D. 99–2.

In the mid 1990s, Customs began developing the Border Release Advanced Screening and Selectivity (BRASS) Program. Like the present Line Release Program, the proposed BRASS Program will continue to provide for the expedited processing, through the use of computers and bar-code technology, of certain high-volume, repetitively-shipped merchandise that is imported at designated locations. Transactions may continue to be designated for either release under entry summary or release for immediate delivery. However, the BRASS Program is a windows-based program designed to improve and replace the DOS-based Line Release Program.

The proposed BRASS Program also improves upon the Line Release Program in two areas. First, the

proposed BRASS Program provisions provide for the centralized processing of requests for BRASS privileges at designated border locations. (Under the present Line Release Program, a decentralized application procedure is followed, whereby applications are submitted to local port directors for approval, which can result in multi-port applications being approved at one port but denied at another port. Under the proposed BRASS Program provisions, a centralized application procedure is proposed, so that there will be uniform processing of applications.) The centralized locations are at Saint Albans, Vermont (for merchandise to be entered along the northern border), and San Diego, California (for merchandise to be entered along the southern border).

Second, the proposed BRASS Program provisions improve upon the Line Release Program by affording appeal procedures for applicants who are denied participation in the BRASS Program and participating entry filers whose BRASS privileges are subsequently revoked. Two levels of administrative appeal will be provided. The first level of appeal will be to the Director of Field Operations at the Customs Management Center, which oversees the BRASS Processing Center that issues a notice of nonselection (to applicants) or adverse action (to participants). Should the first appeal result in a negative determination, a second level of appeal may be taken to the Assistant Commissioner, Office of Field Operations. Under the present Line Release Program, there are no appeal provisions for applicants or participating entry filers.

Customs is now proposing in this document to replace the Line Release Program provisions at subpart D of part 142 of the Customs Regulations with provisions regarding the BRASS Program. The current 12 sections of this subpart (§§ 142.41–142.52) will be replaced with 6 sections (§§ 142.41–142.46) that will provide for the BRASS Program. The current provisions at §§ 142.47–142.52 will be removed from the Customs Regulations (19 CFR subpart D of part 142) and the information they contain that relates to BRASS will be consolidated. Conforming reference changes also will be made to §§ 24.23, 123.71, and 132.15. Participants already in the Line Release Program do not need to reapply for participation in the BRASS Program.

It is noted that further descriptive information regarding the BRASS Program will be provided in a new BRASS Handbook, available from Customs Headquarters and at ports of entry designated for BRASS use.

Discussion of Proposed Amendments to the Regulations

Section 142.41—''Description of BRASS Program''

Under the heading ''Description of BRASS Program'', this section will explain the BRASS Program in general terms. The BRASS Program is described as an automated and electronic system designed, through the use of computers and bar-code technology, to expedite the processing and release of certain high-volume, repetitively-shipped merchandise that is imported at designated locations. BRASS transactions can be designated for either release under entry summary or release for immediate delivery. Merchandise shipments arriving by motor carrier as well as by rail may be processed through BRASS.

The paragraph provides that participation in the BRASS Program is voluntary and that participants must comply with the program's requirements, which include the pre-filing of certain import information for qualifying shipments of merchandise and special identification of those shipments with an assigned bar code. While Customs may inspect any shipment of merchandise approved for BRASS processing, in general, BRASS shipments enjoy expedited processing and release through all designated and approved BRASS ports of entry without further Customs processing.

Further, this paragraph will provide that at certain high-risk locations along the land borders of the United States (the locations are published in the **Federal Register**), the use of BRASS processing and release for particular shipments of merchandise may be denied by Customs unless the imported merchandise is transported by carriers that participate in the Land Border Carrier Initiative Program (*see* subpart H of part 123 of this chapter).

This paragraph also will caution that participants should be aware that failure to follow program requirements for BRASS-approved processing can result in revocation of their participation in the program. Further, failure to follow program requirements may result in participants being liable for civil and criminal penalties.

Further information concerning the BRASS Program will be contained in the forthcoming BRASS Handbook, that will be available from U.S. Customs Service Headquarters, BRASS Processing Centers, and at designated ports of entry approved to process BRASS shipments of merchandise.

Section 142.42—''Application for BRASS Processing''

Under the heading ''Application for BRASS processing'', this section will explain the application and decision process in 5 paragraphs. The section will discuss: (1) Who is eligible to apply to the BRASS Program, (2) what merchandise qualifies for BRASS processing, (3) how applicants apply to the BRASS Program, (4) how applications are processed through the new centralized BRASS Processing Centers, including how applicants are notified of their approval or denial to participate in the BRASS Program, and the administrative appeal procedures available to applicants denied participation, and (5) what the grounds are for denying an application.

Under the heading ''Eligible applicants'', paragraph (a) will provide that only importers that file their own entries and brokers may be applicants for the BRASS Program. The paragraph provides that applicants must be of good character.

Under the heading ''Merchandise criteria'', paragraph (b) will explain what types of merchandise qualify for BRASS processing and explain the volume requirements and examination compliance rates applicable to qualifying import transactions. Qualifying merchandise cannot be prohibited or restricted, subject to absolute quota, denied approval for importation by another Federal government agency required to approve the merchandise, or subsequently determined to be unsuitable for expedited processing under BRASS for reasons pertaining to trade policy.

Further regarding BRASS qualifying merchandise, the examination compliance rate for the qualifying import transactions must be relatively high, as established by the centralized processing center where the application will be submitted.

Because the BRASS Program exists to process and release high-volume, repetitively-shipped merchandise, an applicant will be required to establish, for each port of entry at which he requests BRASS processing, that the annual number of import transactions between the parties designated is sufficient to qualify for BRASS processing. This is a quantitative measure of the number of import transactions in which the applicant engaged in the previous year and is established by the centralized processing center where the application will be submitted. The one-year-parameter on an applicant's import transactions at the designated port of

entry is necessary to give Customs sufficient enough background to determine, in part, whether the applicant should be granted BRASS processing privileges at that requested location.

For BRASS processing privileges along the northern border, the number of import transactions claimed for eligibility must have been with the same manufacturer or shipper, and the same importer. For BRASS processing privileges along the southern border, the number of import transactions claimed for eligibility must have been with the same manufacturer or shipper, importer, and commodity. (The reason no precise number of qualifying shipments is provided for in the regulations is because each port of entry designated for BRASS use has different processing facilities and varying staff and merchandise processing levels. Specific numbers for qualifying shipments along each border will be provided for in the BRASS Handbook, which will account for shifting risk factors associated with the BRASS Program.)

Under the heading ''Application procedure'', paragraph (c) will explain that a broker or importer who files his own entries applies for participation in the BRASS Program by submitting an application for each commodity to be processed, accompanied by a representative sample of an actual commercial invoice for the product(s) sought to be processed under BRASS, to the 8 appropriate BRASS Processing Center. An application is filed on new Customs Form (CF) 7600 (Application for BRASS). On the application, the applicant must provide identification information on any other party, such as the shipper or manufacturer of the qualifying merchandise, that may be involved with the proposed BRASS transactions. Each of the parties identified will be evaluated to determine whether they are of good character.

Copies of the CF 7600 are available at any Customs BRASS port of entry. The information required to be submitted on the CF 7600 will be explained in the BRASS Handbook.

Applications for BRASS processing privileges along the southern border should be submitted to the centralized Southern Border BRASS Processing Center. The address for this processing center will be: U.S. Customs Service, 9777 Via De La Amistad, San Diego, California 92154, Attn: BRASS Processing Center.

Applications for BRASS processing privileges along the northern border should be submitted to the centralized Northern Border BRASS Processing Center. The address for this processing center will be: U.S. Customs Service, 50 S. Main St., Saint Albans, Vermont, 05478–2198, Attn: BRASS Processing Center.

Under the heading ''Notice of action on application'', paragraph (d) will explain the new centralized processing of applications through BRASS Processing Centers, how applicants are notified concerning their approval or denial to participate in the BRASS Program, and the administrative appeal procedures available to applicants denied participation. Applications will be evaluated by the appropriate BRASS Processing Center. Based on the information provided on the BRASS application, Customs makes a determination as to whether the applicant, any party listed on the BRASS application, and the merchandise meet the standards set forth in the BRASS regulations. The BRASS Processing Center then notifies the applicant in writing as to whether the application is approved or denied. (Where an application is incomplete or otherwise contains information that cannot be verified by the appropriate BRASS Processing Center, it will be returned for clarification.)

When an application is approved, Customs assigns the appropriate number of C–4 identifiers, which must be used by the entry filer for those shipments that will be processed through BRASS. A C–4 identifier (Common Commodity Classification Code) is a unique, four-element bar code assigned by the appropriate BRASS Processing Center that identifies the shipper or manufacturer, importer, entry filer, and commodity. If multiple commodities are to be processed at a designated location, then the C–4 identifier assigned for each commodity must be used.

When an application is denied, Customs will issue a notice of nonselection to the applicant. The notice of nonselection will state the reason(s) for the decision and inform the applicant of the administrative appeal procedures that he may pursue under proposed § 142.46.

Under the heading ''Grounds for denial'', paragraph (e) will delineate the specific grounds for not approving an application. This paragraph will provide that the appropriate BRASS Processing Center may deny an applicant's application for any of the following reasons:

1. A reputation imputing to the applicant criminal, dishonest, or unethical conduct, or a record of that conduct;

2. Failure of the merchandise to meet the standards set forth in the regulation;

3. Evidence that the application contains false or misleading information concerning a material fact; or

4. A determination is made that participation in the BRASS Program would endanger the revenue or security of the Customs area.

Section 142.43—''Responsibilities of Participant Accepted for BRASS Processing''

Under the heading ''Responsibilities of participant accepted for BRASS processing'', this section will provide that, when approved to participate in the BRASS Program, the applicant is denominated an ''entry filer'' for BRASS purposes. Entry filers agree to certain responsibilities. These responsibilities include the following:

1. To provide the port director, in writing, with a range of numbers for BRASS processing use, so that Customs can assign a BRASS entry number automatically to each BRASS transaction. A separate range must be provided for each BRASS site and mode of transportation. Entry filers must not assign these numbers to other import transactions. As the previously supplied range nears exhaustion, the entry filer must provide the local port director with new ranges of BRASS entry numbers;

2. To properly prepare, distribute, and use C–4 identifier(s) for BRASS shipments. If multiple commodities are to be processed at a designated location, then the C–4 identifier assigned for each commodity must be used. When multiple commodity processing is desired, the entry filer should consult with the local port director as to the number of commodities allowed to be processed per shipment at the port;

3. To immediately notify Customs in writing of any changes in the C–4 identification information that was provided on the originally-approved BRASS application by submitting a corrected BRASS application with a copy of the originally-approved application. These changes concern the identification of the shipper or manufacturer, importer, entry filer, or the commodity. The notice must include the C–4 identifier to be changed and the date the change is to be effective; and

4. To immediately notify Customs in writing of any changes regarding their method of release for BRASS shipments (from entry or immediate delivery to the other). If the release procedure is to be changed permanently, the request must include the date the change is to be effective and must be submitted to the BRASS Processing Center that issued the C–4 identifier. If the release

procedure is to be changed temporarily, the request must include the date the releases are to return to the release type originally approved. Further information concerning requests for a change in the method of release will be found in the BRASS Handbook.

Section 142.44—''BRASS Processing Procedures''

Under the heading ''BRASS processing procedures'', this section will explain the expedited processing and release procedures of the BRASS Program and the procedure when a compliance examination is ordered. Because the processing procedures for merchandise carried by motor and rail carriers are different, they are explained in separate paragraphs: the motor carrier provisions are explained at paragraph (a); and the rail carrier provisions are explained at paragraph (b). It is noted that for rail carriers, only Automated Manifest System (AMS) rail carriers are eligible for BRASS processing. In general, when shipments are presented for expedited processing and release under BRASS:

1. The merchandise must be specially identified with the proper C–4 code(s) by the entry filer and presented at a designated port (s) of entry approved to process BRASS shipments;

2. For motor carriers, the documentation to be submitted includes an original manifest (and as many copies as the particular BRASS site requires) and an original invoice, with the appropriate C–4 bar code(s) attached. For rail carriers, the documentation data must be submitted electronically;

3. Customs assigns a BRASS entry number to the transaction from the range of numbers previously provided by the entry filer for BRASS processing; and

4. Customs processes the merchandise as a BRASS transaction and the release information is either stamped on the original manifest and invoice documents or sent electronically, whichever procedure is applicable.

(a) For motor carriers, the original paper documents are stamped and the drivers are provided with a copy of the manifest, so that they may depart the port; entry filers are provided with the invoice stamped with the BRASS entry number assigned and the appropriate C–4 identifier information; and Customs retains the original, stamped manifest document;

(b) For rail carriers, the release data is electronically sent to the entry filer and to the carrier.

Occasionally, a compliance examination may be ordered by Customs. When BRASS shipments undergo a compliance examination:

1. The first three steps indicated above are followed, except that the appropriate documentation submitted to Customs is returned to the entry filer; and

2. The entry filer then either:

(a) Enters the merchandise, by preparing either a Customs Form (CF) 3461 or CF 3461 Alternate that utilizes the BRASS entry number assigned by Customs, or

(b) Applies for a special permit for immediate delivery of the merchandise, by preparing either a CF 3461 or CF 3461 Alternate with the required supporting documentation, that utilizes the BRASS entry number assigned by Customs.

Section 142.45—''Revocation of BRASS participation''

Under the heading ''Revocation of BRASS participation'', this section will explain how Customs can revoke an entry filer's privilege to participate in the BRASS Program.

Under the heading ''Immediate revocation'', paragraph (a) will delineate the specific reasons when the appropriate BRASS Processing Center or port director may immediately revoke a participant's BRASS privileges. These reasons include:

1. The application contained false or misleading information concerning a material fact;

2. Any of the parties listed on the application is subsequently indicted for, convicted of, or has committed acts which would constitute any felony or misdemeanor under United States Federal or State law. In the absence of an indictment, conviction, or other legal process, Customs has probable cause to believe the proscribed acts occurred;

3. An entry filer allows an unauthorized person or entity to use his BRASS processing privileges;

4. An entry filer refuses or otherwise fails to follow any proper order of a Customs officer or any Customs order, rule, or regulation;

5. Reasonable grounds exist to believe that Federal rules and regulations pertaining to public health or safety, Customs, or other inspectional activities have not been followed;

6. Evidence of any subsequent dishonest conduct by any of the parties listed on the application; or

7. Continuation of the entry filer's participation in the BRASS Program would endanger the revenue or security of the Customs area.

Under the heading ''Proposed revocation'', paragraph (b) will provide when the appropriate BRASS Processing Center or port director may propose to revoke a participant's BRASS privileges. These reasons will include:

1. The entry filer fails to adhere to the conditions or restrictions imposed by the BRASS Program; or

2. The entry filer does not maintain the minimal number of qualifying import transactions for a period of one year.

Under the heading ''Notice of adverse action'', paragraph (c) will explain Customs notification procedure when a decision is made to revoke an entry filer's participation in the BRASS Program. The appropriate BRASS Processing Center will notify the participant of the decision in writing. The notice will indicate whether the action is effective immediately or is proposed and will include the appropriate directions and information the nature of the decision requires.

Where the revocation of participation is to be effective immediately, the notice issued will be a notice of immediate revocation. The notice of immediate revocation will direct the entry filer to cease using his C–4 identifier on import transactions, state the reason(s) for the revocation decision, and inform the entry filer of the administrative appeal procedures that he may pursue under proposed § 142.46.

Where the revocation of participation is proposed, the notice issued will be a notice of proposed revocation. The notice of proposed revocation will inform the entry filer that he may continue to use his C–4 identifier on import transactions until such time as a notice of revocation is issued by the BRASS Processing Center, state the reason(s) for the proposed revocation, and inform the entry filer that he may file a response with the BRASS Processing Center that addresses the grounds for the action proposed within 30 calendar days of the date of issuance of the notice of proposed revocation. The entry filer may respond by accepting responsibility, explaining extenuating circumstances, and/or providing rebuttal evidence.

If the entry filer does not respond to the preliminary notice, the BRASS Processing Center will issue a notice of revocation 60 calendar days after the date the notice of proposed revocation was issued. The notice of revocation will direct the entry filer to cease using his C–4 identifier on import transactions, state the reason(s) for the revocation decision, and inform the entry filer of the administrative appeal procedures that he may pursue under proposed § 142.46.

If the entry filer files a timely response, the BRASS Processing Center

will issue a final determination regarding the entry filer's participation in the BRASS Program within 30 calendar days of the date the entry filer's response is received by the BRASS Processing Center. If this final determination is adverse, then the notice of revocation will direct the entry filer to cease using his C–4 identifier on import transactions, state the reason(s) for the revocation decision, and inform the entry filer of the administrative appeal procedures that he may pursue under proposed § 142.46.

Section 142.46—Appeals Regarding Decisions Concerning BRASS Participation

Under the heading ''Appeals regarding decisions concerning BRASS participation'', § 142.46 will explain the new administrative appeal procedures that will be provided to BRASS Program participants who receive a notice of revocation and to BRASS Program applicants who receive a notice of nonselection for participation in the BRASS Program. Two levels of administrative review are established. Appeals must be filed within 30 calendar days of the date of issuance of the notice of adverse action (nonselection or revocation). Appeals must be filed in duplicate and must set forth the appellant's responses to the grounds specified in the respective notice issued.

Paragraph (a) will explain the procedure an appellant must follow to file the first level of appeal with the Director of Field Operations at the Management Center which oversees the BRASS Processing Center that issued the notice of adverse action. Within 60 days of receipt of the appeal, the Director of Field Operations, or his designee, will make a determination regarding the appeal and notify the appellant of the decision in writing. If the determination is adverse to the appellant, the notice of appeal decision will state the reason(s) for the appeal decision and inform the appellant that within 30 calendar days of the date of issuance of the appeal decision he may administratively appeal the decision to the final level of appeal.

Paragraph (b) will explain the procedure an appellant must follow to file the final level of appeal with the Assistant Commissioner, Office of Field Operations, at Customs Headquarters. Within 60 days of receipt of the appeal, the Assistant Commissioner, or his designee, will make a determination regarding the appeal and notify the appellant of the decision in writing. If the determination is adverse to the appellant, the notice of appeal decision will state the reason(s) for the appeal decision.

Comments

Before adopting these proposed regulations as a final rule, consideration will be given to any written comments timely submitted to Customs, including comments on the clarity of this proposed rule and how it may be made easier to understand. Comments submitted will be available for public inspection in accordance with the Freedom of Information Act (5 U.S.C. 552), § 1.4 of the Treasury Department Regulations (31 CFR 1.4), and § 103.11(b) of the Customs Regulations (19 CFR 103.11(b)), on regular business days between the hours of 9 a.m. and 4:30 p.m. at the Regulations Branch, Office of Regulations and Rulings, U.S. Customs Service, 1300 Pennsylvania Avenue, NW., Suite 3000, Washington, DC.

The Regulatory Flexibility Act and Executive Order 12866

Pursuant to provisions of the Regulatory Flexibility Act (5 U.S.C. 601 *et seq.*), it is certified that, if adopted, the proposed amendments will not have a significant economic impact on a substantial number of small entities, because the proposed amendments concern a voluntary program that confers a benefit on those filers of imported merchandise that meet the eligibility requirements for BRASS processing privileges. Accordingly, the proposed amendments are not subject to the regulatory analysis or other requirements of 5 U.S.C. 603 and 604. Further, these amendments do not meet the criteria for a ''significant regulatory action'' as specified in E.O. 12866.

Paperwork Reduction Act

The collection of information in the current regulations has already been approved by the Office of Management and Budget (OMB) in accordance with the Paperwork Reduction Act of 1995 (44 U.S.C. 3507) and assigned OMB control number 1515–0181 (Line Release application). This notice of proposed rulemaking does not involve any material change to the existing approved information collection.

An agency may not conduct or sponsor, and a person is not required to respond to, a collection of information unless the collection of information displays a valid control number assigned by OMB.

Part 178 of the Customs Regulations (19 CFR part 178), which lists the information collections contained in the regulations and control numbers assigned by OMB, would be amended accordingly if this proposal is adopted.

List of Subjects

19 CFR Part 24

Customs duties and inspection, Fees, Imports, Reporting and recordkeeping requirements.

19 CFR Part 123

Administrative practice and procedure, Aircraft, Canada, Common carriers, Customs duties and inspection, Entry of merchandise, Freight, Imports, Mexico, Motor carriers, Railroads, Reporting and recordkeeping requirements, Vehicles, Vessels.

19 CFR Part 132

Agriculture and agricultural products, Customs duties and inspection, Quotas, Reporting and recordkeeping requirements.

19 CFR Part 142

Administrative practice and procedure, Common carriers, Customs duties and inspection, Computer technology, Entry of merchandise, Imports, Reporting and recordkeeping requirements.

Proposed Amendments to the Regulations

For the reasons set forth above, it is proposed to amend parts 24, 123, 132, and subpart D of part 142 of the Customs Regulations (19 CFR parts 24, 123, 132, and subpart D of part 142), as set forth below:

PART 24—CUSTOMS FINANCIAL AND ACCOUNTING PROCEDURE

1. The general authority citation for part 24 and the specific authority for § 24.23 continue to read as follows:

Authority: 5 U.S.C. 301; 19 U.S.C. 58a–58c, 66, 1202 (General Note 22, Harmonized Tariff Schedule of the United States), 1505, 1624; 26 U.S.C. 4461, 4462; 31 U.S.C. 9701.

* * * * *

Section 24.23 also issued under 19 U.S.C. 3332;

* * * * *

2. Section 24.23 is amended at paragraph (a)(4)(iii) by removing the words ''any Line Release filed at a part'' and adding, in their place, the words ''import transaction under Border Release Advanced Screening and Selectivity (BRASS) at a port''.

PART 123—CUSTOMS RELATIONS WITH CANADA AND MEXICO

1. The general authority citation for part 123 and the specific authority for § 123.71 continue to read as follows:

Authority: 19 U.S.C. 66, 1202 (General Note 22, Harmonized Tariff Schedule of the United States (HTSUS)), 1431, 1433, 1436, 1448, 1624.

* * * * *

Sections 123.71–123.76 also issued under 19 U.S.C. 1618;

* * * * *

2. In § 123.71:

a. The seventh sentence is amended by removing the words ''Line Release'' and ''Line Release entry'' and adding, in their place, respectively, the words ''Border Release Advanced Screening and Selectivity (BRASS) processing and release'' and ''BRASS processing and release''; and

b. The eighth sentence is amended by removing the words ''Line Release'' and adding, in their place, the words ''BRASS processing and release''.

PART 132—QUOTAS

1. The general authority citation for part 132 and the specific authority citation for § 132.15 continue to read as follows:

Authority: 19 U.S.C. 66, 1202 (General Note 22, Harmonized Tariff Schedule of the United States (HTSUS)), 1623, 1624.

Sections 132.15 through 132.17 also issued under 19 U.S.C. 1202 (additional U.S. Note 3 to Chapter 2, HTSUS; subchapter III of Chapter 99, HTSUS; and additional U.S. Note 8 to Chapter 17, HTSUS, respectively), 1484, 1508.

2. In § 132.15, paragraph (b)(2) is amended by removing the parenthetical words ''(*see* § 142.42(d) of this chapter)'' before the semi-colon.

PART 142—ENTRY PROCESS

1. The authority citation for part 142 continues to read as follows:

Authority: 19 U.S.C. 66, 1448, 1484, 1624.

2. Subpart D of part 142 is revised to read as follows:

Subpart D—Border Release Advanced Screening and Selectivity (BRASS) Merchandise Processing

142.41 Description of BRASS program.
142.42 Application for BRASS processing.
142.43 Responsibilities of participant accepted for BRASS processing.
142.44 BRASS processing procedures.
142.45 Revocation of BRASS participation.
142.46 Appeals regarding decisions concerning BRASS participation.

Subpart D—Border Release Advanced Screening and Selectivity (BRASS) merchandise processing.

§ 142.41 Description of BRASS program.

The Border Release Advanced Screening and Selectivity (BRASS) Program is an automated and electronic system designed, through the use of personal computers and bar-code technology, to expedite the processing and release of certain high-volume, repetitively-shipped merchandise that is imported at designated locations. BRASS transactions may be designated for either release under entry summary or release for immediate delivery. The BRASS Program encompasses merchandise shipments arriving by motor carrier as well as by rail. Participation in the BRASS Program is voluntary and participants must comply with the program's requirements, which include the pre-filing of certain import information for qualifying shipments of merchandise and special identification of those shipments with an assigned bar code. While Customs may inspect any shipment of merchandise approved for BRASS processing, in general, BRASS shipments enjoy expedited processing and release through all designated and approved BRASS ports of entry without further Customs processing. At certain high-risk locations along the land borders of the United States (the locations are published in the **Federal Register**), the use of BRASS processing and release for particular shipments of merchandise may be denied by Customs unless the imported merchandise is transported by carriers that participate in the Land Border Carrier Initiative Program (*see,* subpart H of part 123 of this chapter). Applicants should be aware that failure to follow BRASS Program requirements can result in revocation of their participation in the program. Further, failure to follow program requirements may result in participants being liable for certain civil and criminal penalties. Further information concerning the BRASS Program is contained in the BRASS Handbook, available from U.S. Customs Service Headquarters, BRASS Processing Centers, and at designated ports of entry approved to process BRASS shipments of merchandise.

§ 142.42 Application for BRASS processing.

(a) *Eligible applicants.* Only importers that file their own entries and brokers may apply to participate in the BRASS Program. Applicants must be of good character.

(b) *Merchandise criteria.*—(1) *Non-qualifying merchandise.* Merchandise qualifying for BRASS processing privileges cannot be:

(i) Prohibited or restricted;

(ii) Subject to absolute quota;

(iii) Denied approval for importation by another Federal government agency required to approve the merchandise; or

(iv) Subsequently determined to be unsuitable for expedited processing under BRASS for reasons pertaining to trade policy.

(2) *Volume requirements.* The level of import transactions, measured in quantitative terms regarding the number of high-volume, repetitively-shipped merchandise entries for the previous year at the port(s) of entry where the shipments will be entered for BRASS processing, will be considered by Customs in determining, in part, whether BRASS processing privileges should be granted to the applicant at the requested location. The level of import transactions necessary to qualify for BRASS processing is established by the centralized processing center where the application will be submitted and is determined differently based on whether the requested port(s) of entry is along the northern or southern border.

(i) *Northern border.* On the northern border, the number of import transactions with the same shipper or manufacturer and the same importer at the port(s) of entry where the shipments will be presented for BRASS processing is considered.

(ii) *Southern border.* On the southern border, the number of import transactions with the same shipper or manufacturer, importer, and commodity at the port(s) of entry where the shipments will be presented for BRASS processing is considered.

(3) *Compliance rate.* The examination compliance rate for the qualifying importations must meet Customs requirements, as established by the centralized processing center where the application will be submitted.

(c) *Application procedure.* To participate in the BRASS Program, a broker or an importer who files his own entries must submit an application for each commodity to be processed, accompanied by a representative sample of an actual commercial invoice for the product(s) sought to be processed under BRASS, to the appropriate BRASS Processing Center. Participants already in the former Line Release Program do not need to reapply for participation in the BRASS Program, provided they conduct their business in a manner consistent with the administrative portions of this subpart. An application is filed on Customs Form (CF) 7600 (Application for BRASS). On the application, the applicant must provide, among other information, identification information on any other party, such as the shipper or manufacturer of the qualifying merchandise, that may be involved with the proposed BRASS transactions. Each of the parties identified will be evaluated to determine whether they are of good character. (Copies of the CF 7600 are

available at any Customs BRASS port of entry. Additional information to be submitted on the CF 7600 is explained in the BRASS Handbook.)

(d) *Notice of action on application.* Following an evaluation of the information submitted on the CF 7600 and Customs determination as to whether the applicant, any other party listed on the application, and the merchandise meet the standards set forth in this section, the appropriate BRASS Processing Center will notify the applicant in writing as to whether the application is approved or denied. (Where an application is incomplete or otherwise contains information that cannot be verified by the appropriate BRASS Processing Center, it will be returned for clarification.) When an application is approved, Customs assigns the appropriate number of C–4 identifiers, which are to be used for those shipments that will be processed through BRASS. (A C–4 identifier (Common Commodity Classification Code), is a unique, four-element bar code assigned by the appropriate BRASS Processing Center that identifies the shipper or manufacturer, importer, filer, and commodity.) When an application is denied, Customs will issue a notice of nonselection to the applicant. The notice of nonselection will state the reason(s) for the nonselection and inform the applicant that he may administratively appeal the nonselection decision in accordance with the procedures set forth in § 142.46.

(e) *Grounds for denial.* The BRASS Processing Center may deny an application for any of the following reasons:

(1) A reputation imputing to the applicant criminal, dishonest, or unethical conduct, or a record of that conduct;

(2) Failure of the merchandise to meet the standards set forth in this section;

(3) Evidence that the application contains false or misleading information concerning a material fact; or

(4) A determination is made that participation in the BRASS Program would endanger the revenue or security of the Customs area.

§ 142.43 Responsibilities of participant accepted for BRASS processing.

When approved to participate in the BRASS Program, the applicant is denominated an ''entry filer'' for BRASS purposes. Entry filers agree to the following responsibilities:

(a) *BRASS entry number range.* Entry filers must provide the local port director, in writing, with a range of numbers for BRASS processing use, so that Customs can assign a BRASS entry number automatically to each BRASS transaction. A separate range must be provided for each BRASS site and mode of transportation. Entry filers must not assign these numbers to other import transactions. As the previously supplied range nears exhaustion, the entry filer must provide the local port director with new ranges of BRASS entry numbers;

(b) *C–4 identifier.* Entry filers are responsible for the proper preparation, distribution, and use of C–4 identifier(s). If multiple commodities are to be processed at a designated location, then the C–4 identifier assigned for each commodity must be used. When multiple commodity processing is desired, the entry filer should consult with the local port director as to the number of commodities allowed to be processed per shipment at the port;

(c) *Notification of changes in information set forth on application.* Entry filers must notify Customs immediately of any changes in information provided on the originally-approved application by submitting a corrected BRASS application, with a copy of the originally-approved application. This includes any changes regarding the shipper or manufacturer or the commodity; and

(d) *Changing election of release procedure.* Entry filers who wish to change their election of release procedure for BRASS shipments (from entry or immediate delivery to the other) from that approved in their initial BRASS application must request such change in writing. If the release procedure is to be changed permanently, the request must include the date the change is to be effective and must be submitted to the BRASS Processing Center that issued the C–4 identifier. If the release procedure is to be changed temporarily, the request must include the date the releases are to return to the release procedure originally approved. (Further information concerning requests for a change in BRASS processing can be found in the BRASS Handbook.)

§ 142.44 BRASS processing procedures.

(a) *BRASS processing procedures for motor carriers.*—(1) *Expedited processing and release.* A shipment of merchandise arriving by motor carrier is expeditiously processed and released under the BRASS Program when:

(i) *Merchandise specially designated.* The merchandise presented is specially identified with the proper C–4 code(s) and the merchandise is presented at a designated port of entry approved to process BRASS shipments;

(ii) *Documentation required to be presented.* The documentation submitted includes an original manifest (and as many copies as the particular BRASS site requires) and an original invoice that contain the C–4 identifier (as described in § 142.42(d));

(iii) *Customs processing.* Customs assigns a BRASS processing number to the transaction from the range of numbers previously provided by the entry filer for BRASS processing; and

(iv) *Customs release.* Following the BRASS processing of the merchandise, the release information is stamped on the original manifest and the invoice documents. The motor carrier is then provided with a copy of the manifest, entry filers are provided with the invoice stamped with the BRASS entry number assigned and the appropriate C–4 identifier information, and Customs retains the original, stamped manifest and may retain any other documents submitted.

(2) *Compliance examination.* When a shipment of merchandise presented for BRASS processing is ordered by Customs to undergo a compliance examination, the entry filer must then either make an entry of the merchandise, by preparing either a Customs Form (CF) 3461 or CF 3461 Alternate, or apply for a special permit for immediate delivery of the merchandise, by preparing a CF 3461 or CF 3461 Alternate with the required supporting documentation, that utilizes the BRASS processing number assigned by Customs. Customs will not accept entry or immediate delivery documentation that does not contain the Customs-assigned BRASS entry number.

(b) *BRASS processing procedures for rail carriers.*—(1) *Expedited processing and release.* A shipment of merchandise arriving by rail carrier is expeditiously processed and released under the BRASS Program when:

(i) *Merchandise specially designated.* The merchandise presented is specially identified with the proper C–4 code(s) and the merchandise is presented at a designated port of entry approved to process BRASS shipments. The BRASS rail program is limited to rail AMS carriers;

(i) *Data required to be presented.* The C–4 identifier (as described in § 142.42(d)) must be submitted electronically with the manifest; and

(ii) *Customs processing.* Customs assigns a BRASS entry number to the transaction from the range of numbers previously provided by the entry filer for BRASS processing; and

(iv) *Customs release.* Following the BRASS processing of the merchandise, the release information is electronically sent to the entry filer and to the carrier.

(2) *Compliance examination.* When a shipment of merchandise presented for BRASS processing is ordered by Customs to undergo a compliance examination, the entry filer must then either make an entry of the merchandise, by preparing either a Customs Form (CF) 3461 or 3461 Alternate, or apply for a special permit for immediate delivery of the merchandise, by preparing a CF 3461 or CF 3461 Alternate with the required supporting 22 documentation, that utilizes the BRASS processing number assigned by Customs. Customs will not accept entry or immediate delivery documentation which does not contain the Customs-assigned BRASS entry number.

§ 142.45 Revocation of BRASS participation.

(a) *Immediate revocation.* The appropriate BRASS Processing Center or port director may immediately revoke a participant's BRASS privileges for any of the following reasons:

(1) The application contained false or misleading information concerning a material fact;

(2) Any of the parties listed on the application is subsequently indicted for, convicted of, or has committed acts which would constitute any felony or misdemeanor under United States Federal or State law. In the absence of an indictment, conviction, or other legal process, Customs must have probable cause to believe the proscribed acts occurred;

(3) An entry filer allows an unauthorized person or entity to use his BRASS processing privileges;

(4) An entry filer refuses or otherwise fails to follow any proper order of a Customs officer or any Customs order, rule, or regulation;

(5) Reasonable grounds exist to believe that Federal rules and regulations pertaining to public health or safety, Customs, or other inspectional activities have not been followed;

(6) Evidence of any subsequent dishonest conduct by any of the parties listed on the application; or

(7) Continuation in the BRASS Program would endanger the revenue or security of the Customs area.

(b) *Proposed revocation.* The appropriate BRASS Processing Center or port director may propose to revoke a participant's BRASS privileges for any of the following reasons:

(1) The entry filer fails to adhere to the conditions or restrictions imposed by the BRASS Program; or

(2) The entry filer does not maintain the minimal number of qualifying import transactions for a period of one year.

(c) *Notice of adverse action.* When a decision to revoke an entry filer's participation in the BRASS Program is made, the appropriate BRASS Processing Center will notify the participant in writing. The notice will indicate whether the action is effective immediately or is proposed and will include the appropriate directions and information the nature of the decision requires:

(1) *Immediate revocation.* Where the revocation of participation is effective immediately, the notice issued will be a notice of immediate revocation. The notice of immediate revocation will direct the entry filer to cease using his C–4 identifier on import transactions, state the reason(s) for the revocation decision, and inform the entry filer that he may administratively appeal the revocation decision in accordance with the procedures set forth in § 142.46.

(2) *Proposed revocation.*—(i) *Preliminary notice.* Where the revocation of participation is proposed, the notice issued will be a notice of proposed revocation. The notice of proposed revocation will inform the entry filer that he may continue to use his C–4 identifier on import transactions until a notice of revocation is issued, state the reason(s) for the proposed revocation, and inform the participant that he may file a response with the BRASS Processing Center that addresses the grounds for the action proposed within 30 calendar days of the date of issuance of the notice of proposed revocation. The entry filer may respond by accepting responsibility, explaining extenuating circumstances, and/or providing rebuttal evidence.

(ii) *Final notice.*—(A) *Based on nonresponse.* If the entry filer does not respond to the notice of proposed revocation, the BRASS Processing Center will issue a notice of revocation 60 calendar days after the date of issuance of the notice of proposed revocation. The notice of revocation will direct the entry filer to cease using his C–4 identifier on import transactions, state the reason(s) for the revocation decision, and inform the entry filer that he may administratively appeal the revocation decision in accordance with the procedures set forth in § 142.46.

(B) *Based on response.* If the entry filer files a timely response, the BRASS Processing Center will issue a final determination regarding the entry filer's participation in the BRASS Program within 30 calendar days of the date the entry filer's response is received by the BRASS Processing Center. If this final determination is adverse, then the notice of revocation will direct the entry filer to cease using his C–4 identifier on import transactions, state the reason(s) for the revocation decision, and inform the entry filer that he may administratively appeal the revocation decision in accordance with the procedures set forth in § 142.46.

§ 142.46 Appeals regarding decisions concerning BRASS participation.

A BRASS Program participant who receives a notice of revocation or a BRASS Program applicant who receives a notice of nonselection for participation in the BRASS Program may administratively appeal Customs decision by filing an appeal in writing within 30 calendar days of the date of issuance of the notice of adverse action (nonselection or revocation). Appeals must be filed in duplicate and must set forth the appellant's responses to the grounds specified in the respective notice issued.

(a) *The Director of Field Operations.* The first appeal is to the Director of Field Operations at the Customs Management Center that oversees the BRASS Processing Center that issued the notice of adverse action (nonselection or revocation). Within 60 days of receipt of the appeal, the Director of Field Operations, or his designee, will make a determination regarding the appeal and notify the appellant of the decision in writing. If the determination is adverse to the appellant, the notice of appeal decision will state the reason(s) for the adverse determination and inform the appellant that within 30 calendar days of the date of issuance of the appeal decision he may administratively appeal the decision to the final level of appeal: The Assistant Commissioner, Office of Field Operations.

(b) *The Assistant Commissioner.* The final appeal is to the Assistant Commissioner, Office of Field Operations, U.S. Customs Service, 1300 Pennsylvania Avenue, Washington, DC 20229. Within 60 days of receipt of the appeal, the Assistant Commissioner, or his designee, will make a determination regarding the appeal and notify the appellant of the decision in writing. If the determination is adverse to the appellant, the notice of appeal decision

will state the reason(s) for the adverse determination.

Charles W. Winwood,

Acting Commissioner of Customs.

Approved: January 29, 2002.

Timothy E. Skud,

Acting Deputy Assistant Secretary of the Treasury.

[FR Doc. 02–2466 Filed 1–31–02; 8:45 am]

BILLING CODE 4820–02–P

DEPARTMENT OF THE TREASURY

Internal Revenue Service

26 CFR Part 301

[REG–120135–01]

RIN 1545–AY94

Definition of Agent for Certain Purposes

AGENCY: Internal Revenue Service (IRS), Treasury.

ACTION: Notice of proposed rulemaking.

SUMMARY: This document contains proposed regulations relating to the definition of agent for certain purposes. The proposed regulations clarify that the term agent in certain provisions of section 6103 of the Internal Revenue Code includes contractors.

DATES: Written and electronic comments and requests for a public hearing must be received by May 2, 2002.

ADDRESSES: Send submissions to CC:ITA:RU (REG–120135–01), room 5226, Internal Revenue Service, POB 7604, Ben Franklin Station, Washington, DC 20044. Submissions may be delivered Monday through Friday between the hours of 8 a.m. and 5 p.m. to CC:ITA:RU (REG–120135–01), Courier's Desk, Internal Revenue Service, 1111 Constitution Avenue, NW., Washington, DC. Alternatively, taxpayers may submit comments electronically via the Internet by selecting the ''Tax Regs'' option on the IRS Home Page, or by submitting comments directly to the IRS Internet site: *http://www.irs.ustreas.gov/tax_regs/regslist.html.*

FOR FURTHER INFORMATION CONTACT: Helene R. Newsome, 202–622–4580 (not a toll-free number).

SUPPLEMENTARY INFORMATION:

Background

Generally, returns and return information are confidential under section 6103 of the Internal Revenue Code (Code) unless a specific statutory exception applies. In cases of non-tax-related disclosures, returns and return information generally may only be disclosed to officers and employees of Federal, state, and local government agencies, and not to contractors or agents of such agencies. In certain limited circumstances, however, Congress has permitted disclosures to agents of these agencies. See sections 6103(l)(6)(B), 6103(l)(12), 6103(m)(2), 6103(m)(4), 6103(m)(5), and 6103(m)(7).

This document contains proposed regulations that clarify that the term agent in sections 6103(l) and (m) includes contractors. Clarification that the term agent includes contractors is necessary for the purpose of bringing certain statutory grants of disclosure authority into alignment with the reality of many agencies' operations. Agencies generally procure the services of third parties under public contracting laws, which do not necessarily correlate with common law concepts of agent. This clarification is also consistent with Congressional intent. For example, the Senate Finance Committee, in amending section 6103(m)(2), stated, ''Agents are those who are engaged directly in performing or assisting in collection functions for the federal government, presumably, private collection agencies who have contracted with the government to collect claims . . .'' S. Rep. No. 97–378, at 15 (1982).

This clarification does not provide any new disclosure authority, nor does it authorize the disclosure of return information to contractors that Congress has not previously specifically authorized in the Code. With regard to protection of taxpayer data, agents/contractors are subject to safeguard requirements, redisclosure prohibitions, and civil and criminal penalties for unauthorized disclosures. Accordingly, the proposed regulations do not have an impact on taxpayer privacy.

Special Analyses

It has been determined that this notice of proposed rulemaking is not a significant regulatory action as defined in Executive Order 12866. Therefore, a regulatory assessment is not required. It also has been determined that section 553(b) of the Administrative Procedure Act (5 U.S.C. chapter 5) and the Regulatory Flexibility Act (5 U.S.C. chapter 6) do not apply to these regulations, and, therefore, a Regulatory Flexibility Analysis is not required. Pursuant to section 7805(f), this notice of proposed rulemaking will be submitted to the Chief Counsel of the Small Business Administration for comment on its impact on small businesses.

Comments and Request for a Public Hearing

Before these proposed regulations are adopted as final regulations, consideration will be given to any electronic and written comments (a signed original and eight (8) copies) that are submitted timely to the IRS. The IRS and Treasury Department request comments on the clarity of the proposed rule and how it may be made easier to understand. All comments will be available for public inspection and copying. A public hearing may be scheduled if requested in writing by a person that timely submits written comments. If a public hearing is scheduled, notice of the date, time, and place for the hearing will be published in the **Federal Register**.

Drafting Information

The principal author of these regulations is Helene R. Newsome, Office of the Associate Chief Counsel (Procedure & Administration), Disclosure & Privacy Law Division.

List of Subjects in 26 CFR part 301

Employment taxes, Estate taxes, Excise taxes, Gift taxes, Income taxes, Penalties, Reporting and recordkeeping requirements.

Proposed Amendments to the Regulations

Accordingly, 26 CFR part 301 is proposed to be amended as follows:

PART 301—PROCEDURE AND ADMINISTRATION

Paragraph 1. The authority citation for part 301 is amended by adding an entry in numerical order to read as follows:

Authority: 26 U.S.C. 7805 * * *
Section 301.6103(l)–1 also issued under 26 U.S.C. 6103(q); * * *
Section 301.6103(m)–1 also issued under 26 U.S.C. 6103(q); * * *

Par. 2. Section 301.6103(l)–1 is added to read as follows:

§ 301.6103(l)–1 Disclosure of returns and return information for purposes other than tax administration.

(a) *Definition.* For purposes of applying the provisions of section 6103(l) of the Internal Revenue Code, the term *agent* includes a contractor.

(b) *Effective date.* This section is applicable on or after the date of publication of the Treasury decision adopting these regulations as final regulations in the **Federal Register**.

Par. 3. Section 301.6103(m)–1 is added to read as follows:

§ 301.6103(m)–1 Disclosure of taxpayer identity information.

(a) *Definition.* For purposes of applying the provisions of section 6103(m) of the Internal Revenue Code, the term *agent* includes a contractor.

(b) *Effective date.* This section is applicable on or after the date of publication of the Treasury decision adopting these regulations as final regulations in the **Federal Register**.

Robert E. Wenzel,

Deputy Commissioner of Internal Revenue.

[FR Doc. 02–2533 Filed 1–31–02; 8:45 am]

BILLING CODE 4830–01–P

DEPARTMENT OF VETERANS AFFAIRS

38 CFR Part 20

RIN 2900–AK71

Board of Veterans' Appeals: Rules of Practice—Appeal Withdrawal

AGENCY: Department of Veterans Affairs.

ACTION: Proposed rule.

SUMMARY: The Department of Veterans Affairs (VA) proposes amending a Board of Veterans' Appeals Rule of Practice to remove an unnecessary restriction on who may withdraw an appeal to the Board of Veterans' Appeals and to clarify appeal withdrawal procedures.

DATES: Comments must be received on or before April 2, 2002.

ADDRESSES: Mail or hand-deliver written comments to: Director, Office of Regulations Management (02D), Department of Veterans Affairs, 810 Vermont Ave., NW., Room 1154, Washington, DC 20420; or fax comments to (202) 273–9289; or e-mail comments to *''OGCRegulations@mail.va.gov''.* Comments should indicate that they are submitted in response to ''RIN 2900–AK71.'' All comments received will be available for public inspection in the Office of Regulations Management, Room 1158, between the hours of 8 a.m. and 4:30 p.m., Monday through Friday (except holidays).

FOR FURTHER INFORMATION CONTACT: Steven L. Keller, Senior Deputy Vice Chairman, Board of Veterans' Appeals, Department of Veterans Affairs, 810 Vermont Avenue, NW., Washington, DC 20420, (202) 565–5978.

SUPPLEMENTARY INFORMATION: Initial decisions on claims for Federal veterans' benefits are made at VA field offices throughout the nation. Claimants may appeal those decisions to the Board of Veterans' Appeals (Board).

Appellants may appoint a representative, typically a state or national veterans' service organization or an attorney-at-law, to assist them and act on their behalf throughout the appeal process. The Board's current Rule of Practice 204(c) (38 CFR 20.204(c)) bars an appellant's representative from withdrawing without the appellant's written consent a Notice of Disagreement or a Substantive Appeal (documents filed to initiate and to complete an appeal to the Board, respectively) that the appellant filed personally.

VA proposes removing the restriction on a representative's authority to withdraw an appeal. VA believes that the restriction, adopted in the early 1960s, is an outdated and unnecessary intrusion into the relationship between appellants and their representatives which creates needless delay through unnecessary procedural complexity. Appellants appoint representatives because of the representatives' expertise in making appropriate tactical decisions about how best to pursue the appellants' interests. They entrust the representatives with any number of important procedural decisions. While an appellant could contractually limit the authority of his or her representative, VA believes that those decisions are best left to the parties.

This proposed amendment would also fill in currently missing details about appeal withdrawal filing procedures, such as where to file, what to include in the filing, and the effect of filing. Among other things, an appellant or representative would file an appeal withdrawal with the local VA regional office, called the ''agency of original jurisdiction'' in the proposed rule, up until the time that they receive notice that the appeal has been transferred to the Board. (Such notice is required by 38 CFR 19.36.) Thereafter, they would file a withdrawal directly with the Board. The withdrawal would be effective when received by the agency of original jurisdiction up until the time the appeal is transferred to the Board. Thereafter, the withdrawal would be effective upon receipt by the Board.

VA also proposes removing the statement in the Board's current Rule of Practice 204(c) that the agency of original jurisdiction may not withdraw a Notice of Disagreement or a Substantive Appeal because the restriction would be covered under revised 38 CFR 20.204(a).

Paperwork Reduction Act

This document contains no provisions constituting a collection of information under the Paperwork Reduction Act (44 U.S.C. 3501–3520).

Executive Order 12866

This document has been reviewed by the Office of Management and Budget Under Executive Order 12866.

Regulatory Flexibility Act

The Secretary hereby certifies that this rule would not have a significant economic impact on a substantial number of small entities as they are defined in the Regulatory Flexibility Act, 5 U.S.C. 601–612, inasmuch as this rule applies to individual claimants for veterans' benefits and does not affect such entities. Therefore, pursuant to 5 U.S.C. 605(b), this rule is exempt from the initial and final regulatory flexibility analyses requirements of sections 603 and 604.

Unfunded Mandates

The Unfunded Mandates Reform Act requires, at 2 U.S.C. 1532, that agencies prepare an assessment of anticipated costs and benefits before developing any rule that may result in an expenditure by State, local, or tribal governments, in the aggregate, or by the private sector, of $100 million or more in any given year. This rule would have no consequential effect on State, local, or tribal governments.

Catalog of Federal Domestic Assistance

There is no Catalog of Federal Domestic Assistance number for this proposed rule.

List of Subjects in 38 CFR Part 20

Administrative practice and procedure, Claims, Veterans.

Approved: January 23, 2002.

Anthony J. Principi,

Secretary of Veterans Affairs.

For the reasons set out in the preamble, VA proposes amending 38 CFR part 20 as follows:

PART 20—BOARD OF VETERANS' APPEALS: RULES OF PRACTICE

1. The authority citation for part 20 continues to read as follows:

Authority: 38 U.S.C. 501(a) and as noted in specific sections.

2. Section 20.204 is revised to read as follows:

§ 20.204 Rule 204. Withdrawal of Appeal.

(a) *When and by whom filed.* Only an appellant, or an appellant's authorized representative, may withdraw an appeal. An appeal maybe withdrawn as to any or all issues involved in the appeal.

(b) *Filing.* (1) *Form and content.* Except for appeals withdrawn on the record at a hearing, appeal withdrawals

must be in writing. They must include the name of the veteran, the name of the claimant or appellant if other than the veteran (e.g., a veteran's survivor, a guardian, or a fiduciary appointed to receive VA benefits on an individual's behalf), the applicable Department of Veterans Affairs file number, and a statement that the appeal is withdrawn. If the appeal involves multiple issues, the withdrawal must specify that the appeal is withdrawn in its entirety, or list the issue(s) withdrawn from the appeal.

(2) *Where to file.* Appeal withdrawals should be filed with the agency of original jurisdiction until the appellant or representative filing the withdrawal receives notice that the appeal has been transferred to the Board. Thereafter, file the withdrawal at the following address: Director of Administrative Service (014), Board of Veterans' Appeals, 810 Vermont Avenue, NW., Washington, DC 20420.

(3) *When effective.* Until the appeal is transferred to the Board, an appeal withdrawal is effective when received by the agency of original jurisdiction. Thereafter, it is not effective until received by the Board. A withdrawal received by the Board after the Board issues a decision final under Rule 1100(a) (§ 20.1100(a) of this part) will not be effective.

(c) *Effect of filing.* Withdrawal of an appeal will be deemed a withdrawal of the Notice of Disagreement and, if filed, the Substantive Appeal, as to all issues to which the withdrawal applies. Withdrawal does not preclude filing a new Notice of Disagreement and, after a Statement of the Case is issued, a new Substantive Appeal, as to any issue withdrawn, provided such filings would be timely under this section if the appeal withdrawn had never been filed.

(Authority: 38 U.S.C. 7105(b) and (d))

[FR Doc. 02–2428 Filed 1–31–02; 8:45 am]

BILLING CODE 8320–01–P

DEPARTMENT OF THE INTERIOR

Bureau of Land Management

43 CFR Part 3809

Fish and Wildlife Service

50 CFR Chapter I

Resubmission of Comments; Interruption of Mail Service

AGENCIES: Fish and Wildlife Service and the Bureau of Land Management, Interior.

ACTION: Resubmission of comments on specific rulemaking documents.

SUMMARY: The Office of the Secretary, along with the Fish and Wildlife Service and the Bureau of Land Management give notice to the public of the opportunity to resubmit comments on specific rulemaking documents. This action is necessitated by the possibility that some comments that were submitted by the public in response to the rulemaking documents may not have been timely received by the identified bureaus due to the shutdown of the Brentwood Postal Facility in Washington, DC, on October 21, 2001. The postal facility was closed because of the threat of anthrax contamination. This action is also necessitated because the Department's Internet access, including receipt of outside e-mail, has been shut down under court order until further notice. Comments which may have been sent to the Department by e-mail since December 4, 2001, have not been received by the Department and should be resubmitted by mail to the addresses specified herein.

DATES: Resubmittal of comments on identified rulemaking documents must be postmarked no later than February 15, 2002.

ADDRESSES: The addresses for the resubmittal of comments are as follows:

- Fish and Wildlife Service, 4401 North Fairfax Drive, Office of Policy, Directives and Management, Arlington, VA 22203, unless otherwise noted.
- Bureau of Land Management, Eastern States Office, 7450 Boston Blvd., Springfield, VA 22153, unless otherwise noted.

FOR FURTHER INFORMATION CONTACT: Duncan L. Brown, Office of the Secretary, Washington, DC 202/208–4582.

SUPPLEMENTARY INFORMATION: The purpose of this document is to allow interested parties the opportunity to resubmit comments they may have sent to the Washington, DC, office of the Fish and Wildlife Service and the Bureau of Land Management on certain identified rulemaking documents. This action is taken due to the closure of the Brentwood Postal Facility, Washington, DC, has caused a delay in the delivery of mail to the Department's Washington, DC, agency addresses. In addition, the Department's Internet access, including receipt of outside e-mail, has been shut down under court order until further notice and comments which were sent by e-mail to the Department by e-mail since December 4, 2001, have not been received by the Department. To guarantee the collection of all responsive comments, the Department has decided that it will extend to interested parties the opportunity to resubmit their written comments on the identified rulemaking documents to the agency addresses identified in the **ADDRESSES** section of this document. The affected rulemaking documents are identified as follows:

Proposed Rulemaking Documents

FWS Migratory Bird Hunting—Light Goose Populations—Correction, RIN 1018–AI07
FWS Proposed Critical Habitat—3 S.Cal. Coastal Plants, RIN 1018–AG88
FWS Proposed Critical Habitat—Purple Amole, RIN 1018–AG75
FWS Proposed Critical Habitat—Sant Cruz Tarplant, RIN 1018–AG73
FWS Listing Showy Stickweed as Endangered—Reopening of Comments, RIN 1018–AF75
FWS Revised List of Migratory Birds—Proposed Rule, RIN 1018–AB72
FWS Rota Bridled White-eye Listing as Endangered, RIN 1018–AI16
FWS Kneeland Prairie Penny-cress Critical Habitat—Proposed Rule, RIN 1018–AG92
FWS Sacramento Mtns. Checkerspot Butterfly—Reopening of Comment Period/Public Hearing, RIN 1018–AH40
FWS Managing Harvest of Light Goose Populations—Proposed Rule, RIN 1018–AI07
FWS Reopening of Comment Period and Availability of Draft EIS for Monterey Spineflower Critical Habitat Determination, RIN 1018–AH04
FWS Reopening of Comment Period and Availability of Draft EA for Robust Spineflower Critical Habitat Determination, RIN 1018–AH83
FWS Reopening of Comment Period and Availability of Draft EA for Scotts Valley Spineflower Critical Habitat Determination, FIN 1018–AH82
FWS Endangered Status for the Sacramento Mtns. Checkerspot Butterfly—Proposed Rule, RIN 1018–AH40
FWS Migratory Bird Hunting—Proposed Migratory Bird Hunting Regulations, RIN 1018–AH79
BLM Proposed Rule—Mining Claims Under the General Mining Laws; Surface Management (43 CFR part 3809), RIN 1004–AD44

Dated: January 15, 2002.

P. Lynn Scarlett,

Assistant Secretary—Policy Management and Budget.

[FR Doc. 02–1917 Filed 1–31–02; 8:45 am]

BILLING CODE 4310–RK–M

FEDERAL COMMUNICATIONS COMMISSION

47 CFR Part 73

[DA 02–99, MM Docket No. 02–3, RM–10349]

Digital Television Broadcast Service; Lakin, KS

AGENCY: Federal Communications Commission.

ACTION: Proposed rule.

SUMMARY: The Commission requests comments on a petition filed by Smoky Hills Public Television, licensee of noncommercial educational station KSWK–TV, NTSC channel *3, Lakin, Kansas, requesting the substitution of DTV channel *8 for DTV channel *23. DTV Channel *8 can be allotted to Lakin, Kansas, in compliance with the principle community coverage requirements of Section 73.625(a) at reference coordinates (37–49–38 N. and 101–06–35 W.). As requested, we propose to allot DTV Channel *8 to Lakin with a power of 100 and a height above average terrain (HAAT) of 141 meters.

DATES: Comments must be filed on or before March 11, 2002, and reply comments on or before March 26, 2002.

ADDRESSES: Federal Communications Commission, 445 12th Street, SW., Room TW–A325, Washington, DC 20554. In addition to filing comments with the FCC, interested parties should serve the petitioner, or its counsel or consultant, as follows: Barry S. Persh, Dow, Lohnes & Albertson, PLLC, 1200 New Hampshire Avenue, NW., Suite 800, Washington, DC 20036 (Counsel for Smoky Hills Public Television).

FOR FURTHER INFORMATION CONTACT: Pam Blumenthal, Mass Media Bureau, (202) 418–1600.

SUPPLEMENTARY INFORMATION: This is a synopsis of the Commission's Notice of Proposed Rule Making, MM Docket No. 02–99, adopted January 17, 2002, and released January 18, 2002. The full text of this document is available for public inspection and copying during regular business hours in the FCC Reference Information Center, Portals II, 445 12th Street, SW., Room CY–A257, Washington, DC 20554. This document may also be purchased from the Commission's duplicating contractor, Qualex International, Portals II, 445 12th Street, SW., Room CY–B402, Washington, DC 20554, telephone 202–863–2893, facsimile 202–863–2898, or via e-mail *qualexint@aol.com.*

Provisions of the Regulatory Flexibility Act of 1980 do not apply to this proceeding.

Members of the public should note that from the time a Notice of Proposed Rule Making is issued until the matter is no longer subject to Commission consideration or court review, all *ex parte* contacts are prohibited in Commission proceedings, such as this one, which involve channel allotments. See 47 CFR 1.1204(b) for rules governing permissible *ex parte* contacts.

For information regarding proper filing procedures for comments, see 47 CFR 1.415 and 1.420.

List of Subjects in 47 CFR Part 73

Television, Digital television broadcasting.

For the reasons discussed in the preamble, the Federal Communications Commission proposes to amend 47 CFR part 73 as follows:

PART 73—TELEVISION BROADCAST SERVICES

1. The authority citation for part 73 continues to read as follows:

Authority: 47 U.S.C. 154, 303, 334, and 336.

§ 73.622 [Amended]

2. Section 73.622(b), the Table of Digital Television Allotments under Kansas is amended by removing DTV Channel ''*23'' and adding DTV Channel ''*8'' at Lakin.

Federal Communications Commission.

Barbara A. Kreisman,

Chief, Video Services Division, Mass Media Bureau.

[FR Doc. 02–2438 Filed 1–31–02; 8:45 am]

BILLING CODE 6712–01–P

FEDERAL COMMUNICATIONS COMMISSION

47 CFR Part 73

[DA No. 02–60; MM Docket No. 01–298; RM–10298]

Radio Broadcasting Services; Camden, AL

AGENCY: Federal Communications Commission.

ACTION: Proposed rule; dismissal.

SUMMARY: This document dismisses a proposal filed by Charles Crawford requesting the allotment of Channel 280A at Camden, Alabama, as the community's second FM broadcast service. *See* 66 FR 53755, October 24, 2001. As stated in the document, a showing of continuing interest is required before a channel will be allotted. Since there has been no interest expressed for the allotment of a channel at Camden, the *Report and Order* dismisses the proposal.

FOR FURTHER INFORMATION CONTACT: Kathleen Scheuerle, Mass Media Bureau, (202) 418–2180

SUPPLEMENTARY INFORMATION: This is a summary of the Commission's Report and Order, MM Docket No. 01–298, adopted January 2, 2002, and released January 11, 2002. The full text of this Commission decision is available for inspection and copying during regular business hours in the FCC Reference Information Center, Portals II, 445 12th Street, SW., Room CY–A257, Washington, DC 20554. The complete text of this decision may also be purchased from the Commission's duplicating contractor, Qualex international, Portals II, 445 12th Street, SW., Room CY–B402, Washington, DC 20554, telephone 202–863–2893, facsimile 202–863–2898, or via e-mail *qualexint@aol.com.*

Federal Communications Commission.

John A. Karousos,

Chief, Allocations Branch, Policy and Rules Division, Mass Media Bureau.

[FR Doc. 02–2437 Filed 1–31–02; 8:45 am]

BILLING CODE 6712–01–P

DEPARTMENT OF TRANSPORTATION

Research and Special Programs Administration

49 CFR Parts 107, 171, 172, 173, 177, 178, and 180

[Docket No. RSPA–98–3554 (HM–213)]

RIN 2137–AC90

Hazardous Materials: Requirements for Cargo Tanks; Correction and Extension of Comment Period

AGENCY: Research and Special Programs Administration (RSPA), DOT.

ACTION: Proposed rule; correction and extension of comment period.

SUMMARY: On December 4, 2001, RSPA published a notice of proposed rulemaking to update and clarify the regulations on the construction and maintenance of cargo tank motor vehicles. In response to requests by members of the regulated community, the comment period for the proposed rule is extended until April 4, 2002, to provide commenters additional time. In addition, we are correcting a minor citation error in the proposed regulatory text.

DATES: Submit comments by April 4, 2002. To the extent possible, we will consider comments received after this

date in making our decision on a final rule.

ADDRESSES: Submit comments to the Dockets Management System, U.S. Department of Transportation, Room PL 401, 400 Seventh Street, SW., Washington, DC 20590–0001. Comments should identify Docket Number RSPA–98–3554 (HM–213), and be submitted in two copies. If you wish to receive confirmation of receipt of your written comments, include a self-addressed, stamped postcard. You may also e-mail comments by accessing the Dockets Management System web site at ''*http://dms.dot.gov/*'' and following the instructions for submitting a document electronically. If you prefer, you can fax comments to 202–493–2251 for filing in the docket.

The Dockets Management System is located on the Plaza level of the Nassif Building at the Department of Transportation at the above address. You can review public dockets there between the hours of 9 a.m. and 5 p.m., Monday through Friday, except federal holidays. You can also review comments on-line at the DOT Dockets Management System web site at ''*http://dms.dot.gov/*.''

We are experiencing some delays in mail deliveries as a result of ongoing efforts to ensure that mail is not contaminated with infectious or harmful materials. We encourage you to take advantage of the opportunities provided by the DOT Dockets Management System to submit comments electronically or by fax.

FOR FURTHER INFORMATION CONTACT: Michael Johnsen (202) 366–8553, Office of Hazardous Materials Standards, Research and Special Programs Administration.

SUPPLEMENTARY INFORMATION:

Background

On December 4, 2001, the Research and Special Programs Administration (RSPA, we) published a notice of proposed rulemaking (NPRM) (66 FR 63096) under Docket RSPA–98–3554 (HM–213) to update and clarify the regulations on the construction and maintenance of cargo tank motor vehicles. The proposed rule also addressed three National Transportation Safety Board (NTSB) recommendations and several petitions for rulemaking.

Under 49 Code of Federal Regulations (CFR) 1.73(d), the Federal Motor Carrier Safety Administration (FMCSA) is delegated authority to enforce the Hazardous Materials Regulations (HMR; 49 CFR parts 171–180) , with particular emphasis on highway transportation, including regulations for construction and maintenance of cargo tank motor vehicles. FMCSA and RSPA work closely with the regulated industry through educational assistance activities and FMCSA's compliance and enforcement program. During these activities, we identified several areas in the current regulations that need updating or clarification. In addition, we received requests for clarification of the regulations and petitions for rulemaking. NTSB has also made several safety recommendations concerning cargo tank motor vehicles. In the NPRM, we proposed revisions that would apply to all cargo tank motor vehicles, and revisions that would apply to certain specification cargo tank motor vehicles used to transport certain ladings.

On December 27, 2001, the Truck Trailer Manufacturers Association (TTMA) requested an extension of the comment period (closing date of February 4, 2002). TTMA requested the extension because the TTMA Tank Conference Engineering Committee will be meeting February 26–27, 2002, in Los Angeles, CA to discuss a number of issues addressed in docket HM–213. TTMA asked for additional comment time to properly acknowledge all of its members' thoughts and concerns. In addition, on January 11, 2002, a representative of the National Propane Gas Association, National Tank Truck Carriers, Inc., Petroleum Marketers Association of America, and the Petroleum Transportation and Storage Association requested an extension of the comment period to allow for detailed analysis. RSPA agrees that extending the comment period on this technically complex rulemaking is in the public interest because it will assure thorough consideration of the proposals by all affected entities. Therefore, we are extending the comment period to April 4, 2002.

In addition, we discovered an incorrect reference in the NPRM. On page 63122, under the proposed regulatory text language for § 180.405 (o)(1), the reference ''§ 178.337–11(a)(2)'' should read ''§ 178.337–8(a)(4).''

Accordingly, the HM–213 NPRM is corrected as follows:

Correction

PART 180—[CORRECTED]

§ 180.405 [Corrected]

In proposed rule FR Doc. 01–28117, beginning on page 63096 in the issue of December 4, 2001, make the following correction to the proposed regulatory text:

On page 63122, in the third line of column 3, in § 180.405(o)(1), correct § 178.337–11(a)(2)'' to read ''§ 178.337–8(a)(4)''.

Issued in Washington, DC on January 29, 2002 under authority delegated in 49 CFR part 106.

Robert A. McGuire,

Associate Administrator for Hazardous Materials Safety, Research and Special Programs Administration.

[FR Doc. 02–2515 Filed 1–31–02; 8:45 am]

BILLING CODE 4910–60–P

Proposed Rules

Federal Register
Vol. 67, No. 22
Friday, February 1, 2002

This section of the FEDERAL REGISTER contains notices to the public of the proposed issuance of rules and regulations. The purpose of these notices is to give interested persons an opportunity to participate in the rule making prior to the adoption of the final rules.

DEPARTMENT OF AGRICULTURE

Agricultural Marketing Service

7 CFR Part 29

[Docket No. TB–02–03]

Tobacco Inspection; Producer Referenda on Mandatory Grading

AGENCY: Agricultural Marketing Service, USDA.

ACTION: Proposed rule.

SUMMARY: This proposed rule would establish procedures for referenda among producers of each kind of tobacco that is eligible for price support to determine whether they favor the mandatory grading of that kind of tobacco. Currently, tobacco that is not sold at auction is not subject to mandatory grading.

DATES: Written comments on this proposed rule must be received on or before February 11, 2002.

ADDRESSES: Send comments to John P. Duncan III, Deputy Administrator, Tobacco Programs, Agricultural Marketing Service (AMS), United States Department of Agriculture (USDA), STOP 0280, 1400 Independence Avenue, SW., Washington, DC 20250–0280. Comments will be available for public inspection at this location during regular business hours between 8 AM and 4:30 PM, Monday through Friday, except holidays.

FOR FURTHER INFORMATION CONTACT: John P. Duncan III, Deputy Administrator, Tobacco Programs, AMS, USDA, STOP 0280, 1400 Independence Avenue, SW., Washington, DC 20250–0280; telephone number (202) 205–0567.

SUPPLEMENTARY INFORMATION: Section 759 of the Agriculture, Rural Development, Food and Drug Administration, and Related Agencies Appropriations Act for 2002 (Pub. L. 107–76) (Appropriations Act) requires USDA to conduct referenda among producers of each kind of tobacco that is eligible for price support under the Agricultural Act of 1949 (7 U.S.C. 1421 *et seq.*) to determine whether a majority of producers of a kind of tobacco voting in the referendum favor the mandatory grading of that kind of tobacco. The referenda should be conducted by March 31, 2002. If a majority of the producers voting in a referendum favor the mandatory grading of that kind, USDA is directed to ensure that the kind of tobacco is graded at the time of sale for the 2002 and subsequent marketing years. The USDA is also directed to establish user fees for any such inspections. To the maximum extent practicable, these fees would be established in the same manner as user fees for the grading of tobacco sold at auction authorized under the Tobacco Inspection Act (7 U.S.C. 511 *et seq.*). Regulations for tobacco inspection, including fees and charges, appear in subpart B of 7 CFR part 29.

This proposed rule would establish procedures for conducting the producer referenda. Provisions are included for the method of conducting the referendum, eligibility for voting, a one vote limitation, form and distribution of ballots, filing and tabulation of ballots, and confidentiality. As provided for in the Appropriations Act, separate referenda would be conducted among the producers of each kind of tobacco eligible for price support. These kinds are flue-cured tobacco, types 11, 12, 13, 14; Kentucky-Tennessee fire-cured tobacco, types 22 and 23; Virginia fire-cured tobacco, type 21; Virginia sun-cured tobacco, type 37; dark air-cured tobacco, types 35 and 36; burley tobacco, type 31; and cigar filler and binder tobacco, types 42, 43, 53, 54, and 55, as set forth at 7 CFR part 1464.2.

Producers of each kind of tobacco would be eligible to vote in the referendum for that kind. Under USDA's price support program, periodic referenda are conducted among producers of specific commodities, including tobacco, to determine whether they favor the continuation of quotas. Voting eligibility is governed by 7 CFR 717.3. This proposed rule would to a great extent follow those provisions as they apply to tobacco producers and would determine eligibility to vote in the same or similar way. In general, the persons eligible to vote in a referendum for a particular kind of tobacco would be the farmers engaged in the production of the crop of such tobacco harvested in the immediately preceding crop-year prior to the holding of the referendum. This would include any person who is entitled to share in a crop of the commodity, or the proceeds thereof because he or she shares in the risks of production of the crop as an owner, landlord, tenant, or sharecropper, but would not include a landlord whose return from the crop is fixed regardless of the amount of the crop produced.

This rule proposes to administer the Appropriations Act requirements in accordance with USDA voting procedures with which the affected producers are familiar. The AMS Mandatory Grading Referenda program, producer eligibility, and procedural requirements will be governed by 7 CFR part 717, Holding of Referenda, and the definitions contained in sections 718.2 and 723.104 of that same chapter which govern USDA, Farm Service Agency (FSA) referenda for tobacco producer quotas. This avoids development of redundant requirements, besides, quota holders are familiar with these procedures. A copy of these regulations, a referendum ballot, and voting procedures are available for review in any USDA Service Center.

Executive Order 12866 and 12988

This proposed rule has been determined to be not significant for purposes of Executive Order 12866, and, therefore, has not been reviewed by the Office of Management and Budget.

This rule has been reviewed under Executive Order 12988, Civil Justice Reform. This action is not intended to have retroactive effect. The rule will not exempt any State or local laws, regulations, or policies, unless they present an irreconcilable conflict with this rule. There are no administrative procedures which must be exhausted prior to any judicial challenge to the provisions of this rule.

Regulatory Flexibility Act

In conformance with the provisions of the Regulatory Flexibility Act (5 U.S.C. 601 *et seq.*), consideration has been given to the potential economic impact upon small business. There are approximately 450,000 tobacco producers who would be eligible to vote in the referenda. Pursuant to criteria established under the Regulatory Flexibility Act, most of the tobacco producers would be considered small entities. This rule will not substantially

affect tobacco growers. Voting in the referendum is voluntary. As discussed in the following section on the Paperwork Reduction Act, the public reporting burden is minimal, an estimated 5 minutes per response. Voting will be conducted by mail. The overall impact of this proposed rule should be minimal on tobacco growers because this rule provides for referenda procedures only and relies on, to a great extent, existing procedures. Accordingly, it has been determined that this rule will not have a significant economic impact on a substantial number of small entities.

A comment period of 10 days is provided for this proposed rule. This period of time is deemed appropriate because the regulations should be in place to conduct the referenda by March 31, 2002, and also there should be sufficient time to make mailing lists to send ballots to producers eligible to vote.

Paperwork Reduction Act

The information collections proposed by this rule will be carried out using the referenda procedures of the Farm Service Agency and Form FSA MQ–5, Referendum Ballot. This rule will add no additional burden to that currently approved by OMB and assigned OMB Control Number 0560–0182 under the provisions of the Paperwork Reduction Act of 1995 (44 U.S.C. 35).

List of Subjects in 7 CFR Part 29

Administrative practices and procedures, Advisory committees, Government publications, Imports, Pesticides and pests, Reporting and recordkeeping procedures, Tobacco.

For the reasons set forth in the preamble, 7 CFR Part 29 is proposed to be amended as follows:

PART 29—TOBACCO INSPECTION

Subpart B—Regulations

1. The authority citation for subpart B is revised to read as follows:

Authority: 7 U.S.C. 511m and 511r. Section 29.74a is also issued under sec. 759, Pub. L. 107–76, 115 Stat. 741 (7 U.S.C. 511s).

2. A new § 29.74a is added to read as follows:

§ 29.74a Producer Referenda on Mandatory Grading.

(a)(1) *Method of conducting.* Referenda shall be conducted among producers persons who were engaged in the production of the following types of tobacco harvested in the immediately preceding crop year: Flue-cured tobacco, types 11, 12, 13, 14; Kentucky-Tennessee fire-cured tobacco, types 22 and 23; Virginia fire-cured tobacco, type 21; Virginia sun-cured tobacco, type 37; dark air-cured tobacco, types 35 and 36; burley tobacco, type 31; and cigar filler and binder tobacco, types 42, 43, 53, 54, and 55. A referendum will be conducted for each kind of tobacco and the results will apply to each individual kind. A producer is eligible to vote in referenda for each kind of tobacco they produce.

(2) *Farmers engaged in the production of tobacco.* For purposes of the referenda, persons engaged in the production of tobacco includes any person who is entitled to share in a crop of the tobacco or the proceeds thereof because he or she shares in the risks of production of the crop as an owner, landlord, tenant, or sharecropper (a landlord whose return from the crop is fixed regardless of the amount of the crop produced is excluded) on a farm on which such crop is planted in a workmanlike manner for harvest: Provided, That any failure to harvest the crop because of conditions beyond the control of such person shall not affect his or her status as a person engaged in the production of the crop. In addition, persons engaged in the production of tobacco also includes each person who it is determined would have had an interest as a producer in the crop on a farm for which a farm allotment under the quota program (7 CFR part 723, subpart B) for the crop was established and no acreage of the crop was planted but an acreage of the crop was regarded as planted for history acreage purposes under the applicable Farm Service Agency commodity regulations of the Department of Agriculture.

(3) *One vote limitation.* Each person eligible to vote in a particular referendum shall be entitled to only one vote in such referendum regardless of the number of farms in which such person is interested or the number of communities, counties, or States in which farms are located in which farms such person is interested: Provided, That:

(i) The individual members of a partnership shall each be entitled to one vote, but the partnership as an entity shall not be entitled to vote;

(ii) An individual eligible voter shall be entitled to one vote even though he or she is interested in an entity (including but not limited to a corporation) which entity is also eligible to vote;

(iii) A person shall also be entitled to vote in each instance of his or her capacity as a fiduciary (including but not limited to a guardian, administrator, executor or trustee) if in such fiduciary capacity he or she is eligible to vote but the person for whom he or she acts as a fiduciary shall not be eligible to vote.

(4) *Joint and family interest.* Where several persons, such as members of a family, have participated or will participate in the production of tobacco under the same lease or cropping agreement, only the person or persons who signed the lease or agreement, or agreed to an oral lease or agreement, shall be eligible to vote. Where two or more persons have produced or will produce tobacco as joint tenants, tenants in common, or owners of community property, each such person shall be entitled to one vote if otherwise eligible. The eligibility of one spouse does not affect the eligibility of the other spouse.

(5) *Minors.* A minor shall be entitled to one vote if he or she is otherwise eligible and is 18 years of age or older when he or she votes.

(6) *Interpretation.* In the case of tobacco on a farm where no acreage of tobacco is actually planted but an acreage of the commodity is regarded as planted under applicable regulations of the Department of Agriculture, persons on the farm who it is determined would have had an interest in the commodity as a producer if an acreage of the commodity had been actually planted shall be eligible to vote in the referendum.

(b) *Referenda Procedures.* See part 717 of this chapter for eligibility criteria and the procedures to be used in carrying out mandatory grading referenda. Where not inconsistent with this part, the definitions contained in parts 717, 718 and 723 will govern administration of these referenda. A copy of these regulations, a referendum ballot, and voting procedures are available for review in any USDA Service Center.

Dated: January 28, 2002.

A.J. Yates,

Administrator, Agricultural Marketing Service.

[FR Doc. 02–2403 Filed 1–29–02; 3:18 pm]

BILLING CODE 3410–02–P

DEPARTMENT OF AGRICULTURE

Animal and Plant Health Inspection Service

9 CFR Part 94

[Docket No. 01–041–1]

Change in Disease Status of Estonia With Regard to Rinderpest and Foot-and-Mouth Disease

AGENCY: Animal and Plant Health Inspection Service, USDA.

ACTION: Proposed rule.

SUMMARY: We are proposing to amend the regulations to add Estonia to the list of regions that are considered free of rinderpest and foot-and-mouth disease. We are taking this action because we have determined that Estonia is free of rinderpest and foot-and-mouth disease. We are also proposing to add Estonia to the list of regions that are subject to certain import restrictions on meat and meat products because of their proximity to or trading relationships with rinderpest-or foot-and-mouth disease-affected countries. These actions would update the disease status of Estonia with regard to rinderpest and foot-and-mouth disease while continuing to protect the United States from an introduction of those diseases by providing additional requirements for any meat and meat products imported into the United States from Estonia.

DATES: We invite you to comment on this docket. We will consider all comments we receive that are postmarked, delivered, or e-mailed by April 2, 2002.

ADDRESSES: You may submit comments by postal mail/commercial delivery or by e-mail. If you use postal mail/commercial delivery, please send four copies of your comment (an original and three copies) to: Docket No. 01–041–1, Regulatory Analysis and Development, PPD, APHIS, Station 3C71, 4700 River Road Unit 118, Riverdale, MD 20737–1238. Please state that your comment refers to Docket No. 01–041–1. If you use e-mail, address your comment to *regulations@aphis.usda.gov*. Your comment must be contained in the body of your message; do not send attached files. Please include your name and address in your message and ''Docket No. 01–041–1'' on the subject line.

You may read any comments that we receive on this docket in our reading room. The reading room is located in room 1141 of the USDA South Building, 14th Street and Independence Avenue SW., Washington, DC. Normal reading room hours are 8 a.m. to 4:30 p.m., Monday through Friday, except holidays. To be sure someone is there to help you, please call (202) 690–2817 before coming.

APHIS documents published in the **Federal Register**, and related information, including the names of organizations and individuals who have commented on APHIS dockets, are available on the Internet at *http://www.aphis.usda.gov/ppd/rad/webrepor.html*.

FOR FURTHER INFORMATION CONTACT: Dr. Hatim Gubara, Staff Veterinarian, Regionalization Evaluation Services Staff, VS, APHIS, 4700 River Road Unit 38, Riverdale, MD 20737–1231; (301) 734–5875.

SUPPLEMENTARY INFORMATION:

Background

The regulations in 9 CFR part 94 (referred to below as the regulations) govern the importation of certain animals and animal products into the United States in order to prevent the introduction of various diseases, including rinderpest, foot-and-mouth disease (FMD), African swine fever, hog cholera, and swine vesicular disease. These are dangerous and destructive communicable diseases of ruminants and swine. Section 94.1 of the regulations lists regions of the world that are declared free of rinderpest or free of both rinderpest and FMD. Rinderpest or FMD exists in all other parts of the world not listed. Section 94.11 of the regulations lists regions of the world that have been determined to be free of rinderpest and FMD, but that are subject to certain restrictions because of their proximity to or trading relationships with rinderpest-or FMD-affected regions.

In June 1999, the Animal and Plant Health Inspection Service (APHIS) received a request from Estonia's Veterinary and Food Board to recognize Estonia as free of FMD. In response to that request, and based on our review of supporting documentation accompanying the request and information obtained during a site visit, we are proposing to recognize Estonia as free of FMD. In addition, because rinderpest has never been diagnosed in Estonia and is not endemic to that region of the world, we are also proposing to recognize Estonia as free of rinderpest. Finally, we are proposing to add Estonia to the list of rinderpest- and FMD-free regions whose exports of ruminant and swine meat and products to the United States are subject to certain restrictions to ensure against the introduction of those diseases into this country.

Based on the information submitted to us by the Government of Estonia, we have reviewed and analyzed the animal health status of Estonia relative to FMD. Our review and analysis were conducted in light of the factors identified in 9 CFR 92.2, ''Application for recognition of the animal health status of a region,'' which are used to determine the level of risk associated with importing animals or animal products into the United States from a given region. Based on the information submitted to us, we have concluded the following:

Veterinary infrastructure. The veterinary services authorities in Estonia have the legal authority, organization, and infrastructure to detect, control, and eradicate FMD. Estonia's veterinary services are organized under the Veterinary and Food Board and include approximately 209 authorized veterinarians employed by the government, 841 private veterinarians, 43 laboratory veterinarians, and a number of trained technicians. Authorized veterinarians are distributed among 15 districts within Estonia, each of which falls under the supervision of a District Veterinary Officer (DVO). Each DVO reports directly to the Director General of the Central Veterinary Office. In the event of an animal disease emergency, the Minister of Agriculture delegates authority to the Veterinary and Food Board to implement control measures. The Veterinary and Food Board has the authority to call on private veterinary practitioners, police, and local authorities to provide support to the Central Veterinary Office in depopulating infected premises, disposing of animal carcasses, and controlling and restricting animal movements.

Disease history and surveillance. The last outbreak of FMD in Estonia occurred in 1982 and was traced to its origin in Latvia. Although Estonia has been declared free of FMD by the Office of International des Epizooties (OIE), an active surveillance program continues to be carried out by the Government of Estonia through the testing and monitoring of all herds for FMD.

Diagnostic capabilities. Estonia has the authority, personnel, and diagnostic capabilities to test herds for, and diagnose, FMD. Government-operated laboratories in Estonia work in close contact with international laboratories to confirm diagnoses and type-specific foreign animal pathogens.

Vaccination status. Vaccination against FMD is neither permitted nor practiced in Estonia. Emergency vaccination against FMD may be undertaken at the discretion of the Minister of Agriculture in the event of a risk of an extensive outbreak of the disease. Emergency vaccination against FMD was last implemented during the outbreak of FMD in 1982.

Disease status of adjacent regions. Estonia shares land borders with Latvia and Russia, neither of which is recognized by APHIS as being free of FMD. Estonia is also located south of Finland across the Baltic Sea and the

Gulf of Finland. Finland is recognized by APHIS as being free of FMD.

Degree of separation from adjacent regions. Estonia is sufficiently separated from regions of higher risk by numerous lakes and extensive forest and woodland areas located throughout the country.

Movement across borders. The movement of animals and animal products into Estonia from regions of higher disease risk is strictly controlled. Estonia has 20 animal inspection border posts located in Estonia with a veterinarian on duty at each to perform health examinations of live animals and inspect animal products. All live animals and animal products imported into Estonia require an animal health permit issued by a DVO.

Estonia does not permit the importation of live animals from Latvia, and does not permit the importation of live animals or animal products from Russia. Competition horses, however, are allowed to enter Estonia from Latvia and Russia when accompanied by the appropriate transit permits and health certificates.

Livestock demographics and marketing practices. Estonia has a total of 271,883 head of cattle, 304,000 pigs, 21,250 sheep, 1,116 goats, 2.43 million poultry, and 5,100 horses. The DVOs maintain an adequate system for identifying and tracking cattle and swine herds. There is no known feature of livestock production in the country that increases the risk of disease spread.

Detection and eradication of disease. FMD is a compulsorily notifiable disease in Estonia. The veterinary services in Estonia possess the authority, diagnostic capability, and personnel to rapidly detect, contain, and eradicate any incursion of FMD that might occur.

These findings are described in further detail in a qualitative evaluation that may be obtained by contacting the person listed under **FOR FURTHER INFORMATION CONTACT**. This evaluation may also be viewed on the Internet at *http://www.aphis.usda.gov/vs/reg-request.html* by following the link for current requests and supporting documentation. The qualitative evaluation documents the factors that have led us to conclude that Estonia is free of FMD. As noted previously, rinderpest has never occurred in Estonia and is not endemic to Eastern Europe. Therefore, we are proposing to recognize Estonia as free of rinderpest and FMD and add the country to the list in § 94.1(a)(2) of regions that are considered free of rinderpest and FMD.

These proposed actions would relieve certain restrictions due to FMD and rinderpest on the importation into the United States of certain live animals and animal products from Estonia. However, because Estonia shares common land borders with countries not considered free of rinderpest and FMD, the importation of meat and other products from ruminants and swine into the United States from Estonia would continue to be subject to certain restrictions.

Specifically, we are proposing to add Estonia to the list in § 94.11(a) of regions declared free of rinderpest and FMD but that are subject to special restrictions on the importation of their meat and other animal products into the United States. The regions listed in § 94.11(a) are subject to these special restrictions because they: (1) Supplement their national meat supply by importing fresh (chilled or frozen) meat of ruminants or swine from regions that are designated in § 94.1(a) as regions where rinderpest or FMD exists, (2) have a common land border with regions where rinderpest or FMD exists, or (3) import ruminants or swine from regions where rinderpest or FMD exists under conditions less restrictive than would be acceptable for importation into the United States.

Estonia has common land borders with countries not considered free of FMD. As a result, there is some risk that the meat and other animal products produced by Estonia could be commingled with the fresh (chilled or frozen) meat of animals from a region in which FMD exists and present an undue risk of introducing FMD into the United States if imported without restriction.

Under § 94.11, meat and other animal products of ruminants and swine, including ship stores, airplane meals, and baggage containing these meat or animal products, may not be imported into the United States except in accordance with § 94.11 and the applicable requirements of the USDA's Food Safety and Inspection Service at 9 CFR chapter III.

Section 94.11 generally requires that the meat and other animal products of ruminants and swine be: (1) Prepared in an inspected establishment that is eligible to have its products imported into the United States under the Federal Meat Inspection Act; and (2) accompanied by an additional certificate, issued by a full-time salaried veterinary official of the national government of the exporting region, assuring that the meat or other animal products have not been commingled with or exposed to meat or other animal products originating in, imported from, transported through, or that have otherwise been in a region where rinderpest or FMD exists.

Executive Order 12866 and Regulatory Flexibility Act

This proposed rule has been reviewed under Executive Order 12866. For this action, the Office of Management and Budget has waived its review process required by Executive Order 12866.

We are proposing to amend the regulations by adding Estonia to the list of regions that are considered free of rinderpest and FMD. We are taking this action because we have determined that Estonia is free of rinderpest and FMD. We are also proposing to add Estonia to the list of regions that are subject to certain restrictions because of their proximity to or trading relationships with rinderpest-or FMD-affected countries. These actions would update the disease status of Estonia with regard to rinderpest and FMD while continuing to protect the United States from an introduction of those diseases by providing additional requirements for any meat and meat products imported into the United States from Estonia.

The following analysis addresses the potential economic effects of this proposed rule on small entities, as required by the Regulatory Flexibility Act.

Currently, Estonia is not included in the list of regions that are considered free of rinderpest and FMD. This proposal would add Estonia to the list of regions that are considered free of rinderpest and FMD and add the country to the list of regions subject to certain restrictions because of their proximity to or trading relationships with rinderpest-or FMD-affected countries. This proposed rule would allow for the importation into the United States of ruminants and swine and any fresh (chilled or frozen) meat or other products of any ruminant or swine from Estonia under certain restrictions.

We do not expect that this proposed rule would have a significant economic impact on any entities, large or small, in the United States. Estonia does not produce sufficient quantities of ruminants or swine, or products of ruminants or swine, to significantly affect the U.S. market even if all of Estonia's production were exported to the United States.[1] For example, Estonia's production of beef and veal, mutton and lamb, and pigmeat (51,120 metric tons) was equivalent to less than 0.5 percent of those commodities produced in the United States in 2001. During the same period, Estonia's stock

[1] Realistically, not all of Estonia's production would be exported to the United States. Some of Estonia's production would be consumed domestically and some would be exported to countries other than the United States.

of live cattle, sheep, and pigs (585,200 head) was equivalent to less than 0.5 percent of comparable stock in the United States. Similarly, Estonia's milk production (690,000 metric tons) was less than 1 percent of the total production of milk in the United States in 2001.[2]

Small Entity Impact

The Regulatory Flexibility Act requires that agencies consider the economic effects of their rules on small entities. Given the small amount of Estonia's production, domestic producers in the United States are unlikely to be affected in any measurable way. Other entities that might be affected are brokers, agents, and others in the United States who would become involved in any future importation and sale of ruminants or swine or products of ruminants or swine from Estonia. The number and size of those entities is unknown, but it is reasonable to assume that most of those entities would be small according to the standards set by the U.S. Small Business Administration. However, for the reasons discussed above, any economic impact on those entities, as well as any other affected entities in the United States, should be minimal.

Under these circumstances, the Administrator of the Animal and Plant Health Inspection Service has determined that this action would not have a significant economic impact on a substantial number of small entities.

Executive Order 12988

This proposed rule has been reviewed under Executive Order 12988, Civil Justice Reform. If this proposed rule is adopted: (1) All State and local laws and regulations that are inconsistent with this rule will be preempted; (2) no retroactive effect will be given to this rule; and (3) administrative proceedings will not be required before parties may file suit in court challenging this rule.

Paperwork Reduction Act

This proposed rule contains no information collection or recordkeeping requirements under the Paperwork Reduction Act of 1995 (44 U.S.C. 3501 *et seq.*).

List of Subjects in 9 CFR Part 94

Animal disease, Imports, Livestock, Meat and meat products, Milk, Poultry and poultry products, Reporting and recordkeeping requirements.

Accordingly, we propose to amend 9 CFR part 94 as follows:

[2] Source: Food and Agriculture Organization of the United Nations.

PART 94—RINDERPEST, FOOT-AND-MOUTH DISEASE, FOWL PEST (FOWL PLAGUE), EXOTIC NEWCASTLE DISEASE, AFRICAN SWINE FEVER, HOG CHOLERA, AND BOVINE SPONGIFORM ENCEPHALOPATHY: PROHIBITED AND RESTRICTED IMPORTATIONS

1. The authority citation for part 94 would continue to read as follows:

Authority: 7 U.S.C. 450, 7711, 7712, 7713, 7714, 7751, and 7754; 19 U.S.C. 1306; 21 U.S.C. 111, 114a, 134b, 134c, 134f, 136, and 136a; 31 U.S.C. 9701; 42 U.S.C. 4331 and 4332; 7 CFR 2.22, 2.80, and 371.4.

§ 94.1 [Amended]

2. In § 94.1, paragraph (a)(2) would be amended by adding, in alphabetical order, the word ''Estonia,''.

§ 94.11 [Amended]

3. In 94.11, paragraph (1), the first sentence would be amended by adding, in alphabetical order, the word ''Estonia,''.

Done in Washington, DC, this 28th day of January 2002.

W. Ron DeHaven,

Acting Administrator, Animal and Plant Health Inspection Service.

[FR Doc. 02–2493 Filed 1–31–02; 8:45 am]

BILLING CODE 3410–34–U

DEPARTMENT OF THE TREASURY

Customs Service

19 CFR Parts 24, 123, 132, and 142

RIN 1515–AC92

Procedures Governing the Border Release Advanced Screening and Selectivity (BRASS) Program

AGENCY: Customs Service, Treasury.

ACTION: Notice of proposed rulemaking.

SUMMARY: This document proposes to amend the Customs Regulations to provide for the Border Release Advanced Screening and Selectivity (BRASS) Program, an improved automated and electronic system that will replace the Line Release method of processing certain repetitive and high volume shipments of merchandise into the U.S. Like the present Line Release Program, the proposed BRASS Program will continue to provide for the expedited processing, through the use of computers and bar-code technology, of certain high-volume, repetitively-shipped merchandise that is imported at designated locations. The proposed BRASS Program regulations also will provide for the centralized processing of applications for BRASS processing privileges, and afford administrative appeal rights to applicants who are denied participation in the BRASS Program and to participants whose BRASS processing privileges are subsequently revoked.

DATES: Comments must be received on or before April 2, 2002.

ADDRESSES: Written comments may be addressed to, and inspected at, U.S. Customs Service, Office of Regulations and Rulings—Regulations Branch, 1300 Pennsylvania Avenue, NW., Washington, DC 20229.

FOR FURTHER INFORMATION CONTACT: Enrique S. Tamayo, Office of Field Operations, Trade Programs, Cargo Release Branch; (202) 927–3112.

SUPPLEMENTARY INFORMATION:

Background

In 1992, Customs amended the Customs Regulations at part 142 (19 CFR part 142), which pertains to the entry process, to add a new subpart D to provide for the Line Release method of processing certain shipments of merchandise entering the U.S. *See,* T.D. 92–93. Line Release is an automated system designed to release and track, through the use of personal computers and bar-code technology, shipments of merchandise deemed by Customs to be repetitive and high-volume and that are imported at designated locations. Line Release was implemented as a Disc Operating System (DOS)-based program that interfaces with the Automated Commercial System (ACS). In 1999, the use of Line Release at certain high-risk locations along the land borders of the U.S. for shipments was conditioned on the imported merchandise being transported by carriers that participated in the Land Border Carrier Initiative Program (LBCIP). *See,* T.D. 99–2.

In the mid 1990s, Customs began developing the Border Release Advanced Screening and Selectivity (BRASS) Program. Like the present Line Release Program, the proposed BRASS Program will continue to provide for the expedited processing, through the use of computers and bar-code technology, of certain high-volume, repetitively-shipped merchandise that is imported at designated locations. Transactions may continue to be designated for either release under entry summary or release for immediate delivery. However, the BRASS Program is a windows-based program designed to improve and replace the DOS-based Line Release Program.

The proposed BRASS Program also improves upon the Line Release Program in two areas. First, the

proposed BRASS Program provisions provide for the centralized processing of requests for BRASS privileges at designated border locations. (Under the present Line Release Program, a decentralized application procedure is followed, whereby applications are submitted to local port directors for approval, which can result in multi-port applications being approved at one port but denied at another port. Under the proposed BRASS Program provisions, a centralized application procedure is proposed, so that there will be uniform processing of applications.) The centralized locations are at Saint Albans, Vermont (for merchandise to be entered along the northern border), and San Diego, California (for merchandise to be entered along the southern border).

Second, the proposed BRASS Program provisions improve upon the Line Release Program by affording appeal procedures for applicants who are denied participation in the BRASS Program and participating entry filers whose BRASS privileges are subsequently revoked. Two levels of administrative appeal will be provided. The first level of appeal will be to the Director of Field Operations at the Customs Management Center, which oversees the BRASS Processing Center that issues a notice of nonselection (to applicants) or adverse action (to participants). Should the first appeal result in a negative determination, a second level of appeal may be taken to the Assistant Commissioner, Office of Field Operations. Under the present Line Release Program, there are no appeal provisions for applicants or participating entry filers.

Customs is now proposing in this document to replace the Line Release Program provisions at subpart D of part 142 of the Customs Regulations with provisions regarding the BRASS Program. The current 12 sections of this subpart (§§ 142.41–142.52) will be replaced with 6 sections (§§ 142.41–142.46) that will provide for the BRASS Program. The current provisions at §§ 142.47–142.52 will be removed from the Customs Regulations (19 CFR subpart D of part 142) and the information they contain that relates to BRASS will be consolidated. Conforming reference changes also will be made to §§ 24.23, 123.71, and 132.15. Participants already in the Line Release Program do not need to reapply for participation in the BRASS Program.

It is noted that further descriptive information regarding the BRASS Program will be provided in a new BRASS Handbook, available from Customs Headquarters and at ports of entry designated for BRASS use.

Discussion of Proposed Amendments to the Regulations

Section 142.41—''Description of BRASS Program''

Under the heading ''Description of BRASS Program'', this section will explain the BRASS Program in general terms. The BRASS Program is described as an automated and electronic system designed, through the use of computers and bar-code technology, to expedite the processing and release of certain high-volume, repetitively-shipped merchandise that is imported at designated locations. BRASS transactions can be designated for either release under entry summary or release for immediate delivery. Merchandise shipments arriving by motor carrier as well as by rail may be processed through BRASS.

The paragraph provides that participation in the BRASS Program is voluntary and that participants must comply with the program's requirements, which include the pre-filing of certain import information for qualifying shipments of merchandise and special identification of those shipments with an assigned bar code. While Customs may inspect any shipment of merchandise approved for BRASS processing, in general, BRASS shipments enjoy expedited processing and release through all designated and approved BRASS ports of entry without further Customs processing.

Further, this paragraph will provide that at certain high-risk locations along the land borders of the United States (the locations are published in the **Federal Register**), the use of BRASS processing and release for particular shipments of merchandise may be denied by Customs unless the imported merchandise is transported by carriers that participate in the Land Border Carrier Initiative Program (*see* subpart H of part 123 of this chapter).

This paragraph also will caution that participants should be aware that failure to follow program requirements for BRASS-approved processing can result in revocation of their participation in the program. Further, failure to follow program requirements may result in participants being liable for civil and criminal penalties.

Further information concerning the BRASS Program will be contained in the forthcoming BRASS Handbook, that will be available from U.S. Customs Service Headquarters, BRASS Processing Centers, and at designated ports of entry approved to process BRASS shipments of merchandise.

Section 142.42—''Application for BRASS Processing''

Under the heading ''Application for BRASS processing'', this section will explain the application and decision process in 5 paragraphs. The section will discuss: (1) Who is eligible to apply to the BRASS Program, (2) what merchandise qualifies for BRASS processing, (3) how applicants apply to the BRASS Program, (4) how applications are processed through the new centralized BRASS Processing Centers, including how applicants are notified of their approval or denial to participate in the BRASS Program, and the administrative appeal procedures available to applicants denied participation, and (5) what the grounds are for denying an application.

Under the heading ''Eligible applicants'', paragraph (a) will provide that only importers that file their own entries and brokers may be applicants for the BRASS Program. The paragraph provides that applicants must be of good character.

Under the heading ''Merchandise criteria'', paragraph (b) will explain what types of merchandise qualify for BRASS processing and explain the volume requirements and examination compliance rates applicable to qualifying import transactions. Qualifying merchandise cannot be prohibited or restricted, subject to absolute quota, denied approval for importation by another Federal government agency required to approve the merchandise, or subsequently determined to be unsuitable for expedited processing under BRASS for reasons pertaining to trade policy.

Further regarding BRASS qualifying merchandise, the examination compliance rate for the qualifying import transactions must be relatively high, as established by the centralized processing center where the application will be submitted.

Because the BRASS Program exists to process and release high-volume, repetitively-shipped merchandise, an applicant will be required to establish, for each port of entry at which he requests BRASS processing, that the annual number of import transactions between the parties designated is sufficient to qualify for BRASS processing. This is a quantitative measure of the number of import transactions in which the applicant engaged in the previous year and is established by the centralized processing center where the application will be submitted. The one-year-parameter on an applicant's import transactions at the designated port of

entry is necessary to give Customs sufficient enough background to determine, in part, whether the applicant should be granted BRASS processing privileges at that requested location.

For BRASS processing privileges along the northern border, the number of import transactions claimed for eligibility must have been with the same manufacturer or shipper, and the same importer. For BRASS processing privileges along the southern border, the number of import transactions claimed for eligibility must have been with the same manufacturer or shipper, importer, and commodity. (The reason no precise number of qualifying shipments is provided for in the regulations is because each port of entry designated for BRASS use has different processing facilities and varying staff and merchandise processing levels. Specific numbers for qualifying shipments along each border will be provided for in the BRASS Handbook, which will account for shifting risk factors associated with the BRASS Program.)

Under the heading ''Application procedure'', paragraph (c) will explain that a broker or importer who files his own entries applies for participation in the BRASS Program by submitting an application for each commodity to be processed, accompanied by a representative sample of an actual commercial invoice for the product(s) sought to be processed under BRASS, to the 8 appropriate BRASS Processing Center. An application is filed on new Customs Form (CF) 7600 (Application for BRASS). On the application, the applicant must provide identification information on any other party, such as the shipper or manufacturer of the qualifying merchandise, that may be involved with the proposed BRASS transactions. Each of the parties identified will be evaluated to determine whether they are of good character.

Copies of the CF 7600 are available at any Customs BRASS port of entry. The information required to be submitted on the CF 7600 will be explained in the BRASS Handbook.

Applications for BRASS processing privileges along the southern border should be submitted to the centralized Southern Border BRASS Processing Center. The address for this processing center will be: U.S. Customs Service, 9777 Via De La Amistad, San Diego, California 92154, Attn: BRASS Processing Center.

Applications for BRASS processing privileges along the northern border should be submitted to the centralized Northern Border BRASS Processing Center. The address for this processing center will be: U.S. Customs Service, 50 S. Main St., Saint Albans, Vermont, 05478–2198, Attn: BRASS Processing Center.

Under the heading ''Notice of action on application'', paragraph (d) will explain the new centralized processing of applications through BRASS Processing Centers, how applicants are notified concerning their approval or denial to participate in the BRASS Program, and the administrative appeal procedures available to applicants denied participation. Applications will be evaluated by the appropriate BRASS Processing Center. Based on the information provided on the BRASS application, Customs makes a determination as to whether the applicant, any party listed on the BRASS application, and the merchandise meet the standards set forth in the BRASS regulations. The BRASS Processing Center then notifies the applicant in writing as to whether the application is approved or denied. (Where an application is incomplete or otherwise contains information that cannot be verified by the appropriate BRASS Processing Center, it will be returned for clarification.)

When an application is approved, Customs assigns the appropriate number of C–4 identifiers, which must be used by the entry filer for those shipments that will be processed through BRASS. A C–4 identifier (Common Commodity Classification Code) is a unique, four-element bar code assigned by the appropriate BRASS Processing Center that identifies the shipper or manufacturer, importer, entry filer, and commodity. If multiple commodities are to be processed at a designated location, then the C–4 identifier assigned for each commodity must be used.

When an application is denied, Customs will issue a notice of nonselection to the applicant. The notice of nonselection will state the reason(s) for the decision and inform the applicant of the administrative appeal procedures that he may pursue under proposed § 142.46.

Under the heading ''Grounds for denial'', paragraph (e) will delineate the specific grounds for not approving an application. This paragraph will provide that the appropriate BRASS Processing Center may deny an applicant's application for any of the following reasons:

1. A reputation imputing to the applicant criminal, dishonest, or unethical conduct, or a record of that conduct;

2. Failure of the merchandise to meet the standards set forth in the regulation;

3. Evidence that the application contains false or misleading information concerning a material fact; or

4. A determination is made that participation in the BRASS Program would endanger the revenue or security of the Customs area.

Section 142.43—''Responsibilities of Participant Accepted for BRASS Processing''

Under the heading ''Responsibilities of participant accepted for BRASS processing'', this section will provide that, when approved to participate in the BRASS Program, the applicant is denominated an ''entry filer'' for BRASS purposes. Entry filers agree to certain responsibilities. These responsibilities include the following:

1. To provide the port director, in writing, with a range of numbers for BRASS processing use, so that Customs can assign a BRASS entry number automatically to each BRASS transaction. A separate range must be provided for each BRASS site and mode of transportation. Entry filers must not assign these numbers to other import transactions. As the previously supplied range nears exhaustion, the entry filer must provide the local port director with new ranges of BRASS entry numbers;

2. To properly prepare, distribute, and use C–4 identifier(s) for BRASS shipments. If multiple commodities are to be processed at a designated location, then the C–4 identifier assigned for each commodity must be used. When multiple commodity processing is desired, the entry filer should consult with the local port director as to the number of commodities allowed to be processed per shipment at the port;

3. To immediately notify Customs in writing of any changes in the C–4 identification information that was provided on the originally-approved BRASS application by submitting a corrected BRASS application with a copy of the originally-approved application. These changes concern the identification of the shipper or manufacturer, importer, entry filer, or the commodity. The notice must include the C–4 identifier to be changed and the date the change is to be effective; and

4. To immediately notify Customs in writing of any changes regarding their method of release for BRASS shipments (from entry or immediate delivery to the other). If the release procedure is to be changed permanently, the request must include the date the change is to be effective and must be submitted to the BRASS Processing Center that issued the C–4 identifier. If the release

procedure is to be changed temporarily, the request must include the date the releases are to return to the release type originally approved. Further information concerning requests for a change in the method of release will be found in the BRASS Handbook.

Section 142.44—''BRASS Processing Procedures''

Under the heading ''BRASS processing procedures'', this section will explain the expedited processing and release procedures of the BRASS Program and the procedure when a compliance examination is ordered. Because the processing procedures for merchandise carried by motor and rail carriers are different, they are explained in separate paragraphs: the motor carrier provisions are explained at paragraph (a); and the rail carrier provisions are explained at paragraph (b). It is noted that for rail carriers, only Automated Manifest System (AMS) rail carriers are eligible for BRASS processing. In general, when shipments are presented for expedited processing and release under BRASS:

1. The merchandise must be specially identified with the proper C–4 code(s) by the entry filer and presented at a designated port (s) of entry approved to process BRASS shipments;

2. For motor carriers, the documentation to be submitted includes an original manifest (and as many copies as the particular BRASS site requires) and an original invoice, with the appropriate C–4 bar code(s) attached. For rail carriers, the documentation data must be submitted electronically;

3. Customs assigns a BRASS entry number to the transaction from the range of numbers previously provided by the entry filer for BRASS processing; and

4. Customs processes the merchandise as a BRASS transaction and the release information is either stamped on the original manifest and invoice documents or sent electronically, whichever procedure is applicable.

(a) For motor carriers, the original paper documents are stamped and the drivers are provided with a copy of the manifest, so that they may depart the port; entry filers are provided with the invoice stamped with the BRASS entry number assigned and the appropriate C–4 identifier information; and Customs retains the original, stamped manifest document;

(b) For rail carriers, the release data is electronically sent to the entry filer and to the carrier.

Occasionally, a compliance examination may be ordered by Customs. When BRASS shipments undergo a compliance examination:

1. The first three steps indicated above are followed, except that the appropriate documentation submitted to Customs is returned to the entry filer; and

2. The entry filer then either:

(a) Enters the merchandise, by preparing either a Customs Form (CF) 3461 or CF 3461 Alternate that utilizes the BRASS entry number assigned by Customs, or

(b) Applies for a special permit for immediate delivery of the merchandise, by preparing either a CF 3461 or CF 3461 Alternate with the required supporting documentation, that utilizes the BRASS entry number assigned by Customs.

Section 142.45—''Revocation of BRASS participation''

Under the heading ''Revocation of BRASS participation'', this section will explain how Customs can revoke an entry filer's privilege to participate in the BRASS Program.

Under the heading ''Immediate revocation'', paragraph (a) will delineate the specific reasons when the appropriate BRASS Processing Center or port director may immediately revoke a participant's BRASS privileges. These reasons include:

1. The application contained false or misleading information concerning a material fact;

2. Any of the parties listed on the application is subsequently indicted for, convicted of, or has committed acts which would constitute any felony or misdemeanor under United States Federal or State law. In the absence of an indictment, conviction, or other legal process, Customs has probable cause to believe the proscribed acts occurred;

3. An entry filer allows an unauthorized person or entity to use his BRASS processing privileges;

4. An entry filer refuses or otherwise fails to follow any proper order of a Customs officer or any Customs order, rule, or regulation;

5. Reasonable grounds exist to believe that Federal rules and regulations pertaining to public health or safety, Customs, or other inspectional activities have not been followed;

6. Evidence of any subsequent dishonest conduct by any of the parties listed on the application; or

7. Continuation of the entry filer's participation in the BRASS Program would endanger the revenue or security of the Customs area.

Under the heading ''Proposed revocation'', paragraph (b) will provide when the appropriate BRASS Processing Center or port director may propose to revoke a participant's BRASS privileges. These reasons will include:

1. The entry filer fails to adhere to the conditions or restrictions imposed by the BRASS Program; or

2. The entry filer does not maintain the minimal number of qualifying import transactions for a period of one year.

Under the heading ''Notice of adverse action'', paragraph (c) will explain Customs notification procedure when a decision is made to revoke an entry filer's participation in the BRASS Program. The appropriate BRASS Processing Center will notify the participant of the decision in writing. The notice will indicate whether the action is effective immediately or is proposed and will include the appropriate directions and information the nature of the decision requires.

Where the revocation of participation is to be effective immediately, the notice issued will be a notice of immediate revocation. The notice of immediate revocation will direct the entry filer to cease using his C–4 identifier on import transactions, state the reason(s) for the revocation decision, and inform the entry filer of the administrative appeal procedures that he may pursue under proposed § 142.46.

Where the revocation of participation is proposed, the notice issued will be a notice of proposed revocation. The notice of proposed revocation will inform the entry filer that he may continue to use his C–4 identifier on import transactions until such time as a notice of revocation is issued by the BRASS Processing Center, state the reason(s) for the proposed revocation, and inform the entry filer that he may file a response with the BRASS Processing Center that addresses the grounds for the action proposed within 30 calendar days of the date of issuance of the notice of proposed revocation. The entry filer may respond by accepting responsibility, explaining extenuating circumstances, and/or providing rebuttal evidence.

If the entry filer does not respond to the preliminary notice, the BRASS Processing Center will issue a notice of revocation 60 calendar days after the date the notice of proposed revocation was issued. The notice of revocation will direct the entry filer to cease using his C–4 identifier on import transactions, state the reason(s) for the revocation decision, and inform the entry filer of the administrative appeal procedures that he may pursue under proposed § 142.46.

If the entry filer files a timely response, the BRASS Processing Center

will issue a final determination regarding the entry filer's participation in the BRASS Program within 30 calendar days of the date the entry filer's response is received by the BRASS Processing Center. If this final determination is adverse, then the notice of revocation will direct the entry filer to cease using his C–4 identifier on import transactions, state the reason(s) for the revocation decision, and inform the entry filer of the administrative appeal procedures that he may pursue under proposed § 142.46.

Section 142.46—Appeals Regarding Decisions Concerning BRASS Participation

Under the heading ''Appeals regarding decisions concerning BRASS participation'', § 142.46 will explain the new administrative appeal procedures that will be provided to BRASS Program participants who receive a notice of revocation and to BRASS Program applicants who receive a notice of nonselection for participation in the BRASS Program. Two levels of administrative review are established. Appeals must be filed within 30 calendar days of the date of issuance of the notice of adverse action (nonselection or revocation). Appeals must be filed in duplicate and must set forth the appellant's responses to the grounds specified in the respective notice issued.

Paragraph (a) will explain the procedure an appellant must follow to file the first level of appeal with the Director of Field Operations at the Management Center which oversees the BRASS Processing Center that issued the notice of adverse action. Within 60 days of receipt of the appeal, the Director of Field Operations, or his designee, will make a determination regarding the appeal and notify the appellant of the decision in writing. If the determination is adverse to the appellant, the notice of appeal decision will state the reason(s) for the appeal decision and inform the appellant that within 30 calendar days of the date of issuance of the appeal decision he may administratively appeal the decision to the final level of appeal.

Paragraph (b) will explain the procedure an appellant must follow to file the final level of appeal with the Assistant Commissioner, Office of Field Operations, at Customs Headquarters. Within 60 days of receipt of the appeal, the Assistant Commissioner, or his designee, will make a determination regarding the appeal and notify the appellant of the decision in writing. If the determination is adverse to the appellant, the notice of appeal decision will state the reason(s) for the appeal decision.

Comments

Before adopting these proposed regulations as a final rule, consideration will be given to any written comments timely submitted to Customs, including comments on the clarity of this proposed rule and how it may be made easier to understand. Comments submitted will be available for public inspection in accordance with the Freedom of Information Act (5 U.S.C. 552), § 1.4 of the Treasury Department Regulations (31 CFR 1.4), and § 103.11(b) of the Customs Regulations (19 CFR 103.11(b)), on regular business days between the hours of 9 a.m. and 4:30 p.m. at the Regulations Branch, Office of Regulations and Rulings, U.S. Customs Service, 1300 Pennsylvania Avenue, NW., Suite 3000, Washington, DC.

The Regulatory Flexibility Act and Executive Order 12866

Pursuant to provisions of the Regulatory Flexibility Act (5 U.S.C. 601 *et seq.*), it is certified that, if adopted, the proposed amendments will not have a significant economic impact on a substantial number of small entities, because the proposed amendments concern a voluntary program that confers a benefit on those filers of imported merchandise that meet the eligibility requirements for BRASS processing privileges. Accordingly, the proposed amendments are not subject to the regulatory analysis or other requirements of 5 U.S.C. 603 and 604. Further, these amendments do not meet the criteria for a ''significant regulatory action'' as specified in E.O. 12866.

Paperwork Reduction Act

The collection of information in the current regulations has already been approved by the Office of Management and Budget (OMB) in accordance with the Paperwork Reduction Act of 1995 (44 U.S.C. 3507) and assigned OMB control number 1515–0181 (Line Release application). This notice of proposed rulemaking does not involve any material change to the existing approved information collection.

An agency may not conduct or sponsor, and a person is not required to respond to, a collection of information unless the collection of information displays a valid control number assigned by OMB.

Part 178 of the Customs Regulations (19 CFR part 178), which lists the information collections contained in the regulations and control numbers assigned by OMB, would be amended accordingly if this proposal is adopted.

List of Subjects

19 CFR Part 24

Customs duties and inspection, Fees, Imports, Reporting and recordkeeping requirements.

19 CFR Part 123

Administrative practice and procedure, Aircraft, Canada, Common carriers, Customs duties and inspection, Entry of merchandise, Freight, Imports, Mexico, Motor carriers, Railroads, Reporting and recordkeeping requirements, Vehicles, Vessels.

19 CFR Part 132

Agriculture and agricultural products, Customs duties and inspection, Quotas, Reporting and recordkeeping requirements.

19 CFR Part 142

Administrative practice and procedure, Common carriers, Customs duties and inspection, Computer technology, Entry of merchandise, Imports, Reporting and recordkeeping requirements.

Proposed Amendments to the Regulations

For the reasons set forth above, it is proposed to amend parts 24, 123, 132, and subpart D of part 142 of the Customs Regulations (19 CFR parts 24, 123, 132, and subpart D of part 142), as set forth below:

PART 24—CUSTOMS FINANCIAL AND ACCOUNTING PROCEDURE

1. The general authority citation for part 24 and the specific authority for § 24.23 continue to read as follows:

Authority: 5 U.S.C. 301; 19 U.S.C. 58a–58c, 66, 1202 (General Note 22, Harmonized Tariff Schedule of the United States), 1505, 1624; 26 U.S.C. 4461, 4462; 31 U.S.C. 9701.

* * * * *

Section 24.23 also issued under 19 U.S.C. 3332;

* * * * *

2. Section 24.23 is amended at paragraph (a)(4)(iii) by removing the words ''any Line Release filed at a part'' and adding, in their place, the words ''import transaction under Border Release Advanced Screening and Selectivity (BRASS) at a port''.

PART 123—CUSTOMS RELATIONS WITH CANADA AND MEXICO

1. The general authority citation for part 123 and the specific authority for § 123.71 continue to read as follows:

Authority: 19 U.S.C. 66, 1202 (General Note 22, Harmonized Tariff Schedule of the United States (HTSUS)), 1431, 1433, 1436, 1448, 1624.

* * * * *

Sections 123.71–123.76 also issued under 19 U.S.C. 1618;

* * * * *

2. In § 123.71:

a. The seventh sentence is amended by removing the words ''Line Release'' and ''Line Release entry'' and adding, in their place, respectively, the words ''Border Release Advanced Screening and Selectivity (BRASS) processing and release'' and ''BRASS processing and release''; and

b. The eighth sentence is amended by removing the words ''Line Release'' and adding, in their place, the words ''BRASS processing and release''.

PART 132—QUOTAS

1. The general authority citation for part 132 and the specific authority citation for § 132.15 continue to read as follows:

Authority: 19 U.S.C. 66, 1202 (General Note 22, Harmonized Tariff Schedule of the United States (HTSUS)), 1623, 1624.

Sections 132.15 through 132.17 also issued under 19 U.S.C. 1202 (additional U.S. Note 3 to Chapter 2, HTSUS; subchapter III of Chapter 99, HTSUS; and additional U.S. Note 8 to Chapter 17, HTSUS, respectively), 1484, 1508.

2. In § 132.15, paragraph (b)(2) is amended by removing the parenthetical words ''(*see* § 142.42(d) of this chapter)'' before the semi-colon.

PART 142—ENTRY PROCESS

1. The authority citation for part 142 continues to read as follows:

Authority: 19 U.S.C. 66, 1448, 1484, 1624.

2. Subpart D of part 142 is revised to read as follows:

Subpart D—Border Release Advanced Screening and Selectivity (BRASS) Merchandise Processing

142.41 Description of BRASS program.
142.42 Application for BRASS processing.
142.43 Responsibilities of participant accepted for BRASS processing.
142.44 BRASS processing procedures.
142.45 Revocation of BRASS participation.
142.46 Appeals regarding decisions concerning BRASS participation.

Subpart D—Border Release Advanced Screening and Selectivity (BRASS) merchandise processing.

§ 142.41 Description of BRASS program.

The Border Release Advanced Screening and Selectivity (BRASS) Program is an automated and electronic system designed, through the use of personal computers and bar-code technology, to expedite the processing and release of certain high-volume, repetitively-shipped merchandise that is imported at designated locations. BRASS transactions may be designated for either release under entry summary or release for immediate delivery. The BRASS Program encompasses merchandise shipments arriving by motor carrier as well as by rail. Participation in the BRASS Program is voluntary and participants must comply with the program's requirements, which include the pre-filing of certain import information for qualifying shipments of merchandise and special identification of those shipments with an assigned bar code. While Customs may inspect any shipment of merchandise approved for BRASS processing, in general, BRASS shipments enjoy expedited processing and release through all designated and approved BRASS ports of entry without further Customs processing. At certain high-risk locations along the land borders of the United States (the locations are published in the **Federal Register**), the use of BRASS processing and release for particular shipments of merchandise may be denied by Customs unless the imported merchandise is transported by carriers that participate in the Land Border Carrier Initiative Program (*see,* subpart H of part 123 of this chapter). Applicants should be aware that failure to follow BRASS Program requirements can result in revocation of their participation in the program. Further, failure to follow program requirements may result in participants being liable for certain civil and criminal penalties. Further information concerning the BRASS Program is contained in the BRASS Handbook, available from U.S. Customs Service Headquarters, BRASS Processing Centers, and at designated ports of entry approved to process BRASS shipments of merchandise.

§ 142.42 Application for BRASS processing.

(a) *Eligible applicants.* Only importers that file their own entries and brokers may apply to participate in the BRASS Program. Applicants must be of good character.

(b) *Merchandise criteria.*—(1) *Non-qualifying merchandise.* Merchandise qualifying for BRASS processing privileges cannot be:

(i) Prohibited or restricted;

(ii) Subject to absolute quota;

(iii) Denied approval for importation by another Federal government agency required to approve the merchandise; or

(iv) Subsequently determined to be unsuitable for expedited processing under BRASS for reasons pertaining to trade policy.

(2) *Volume requirements.* The level of import transactions, measured in quantitative terms regarding the number of high-volume, repetitively-shipped merchandise entries for the previous year at the port(s) of entry where the shipments will be entered for BRASS processing, will be considered by Customs in determining, in part, whether BRASS processing privileges should be granted to the applicant at the requested location. The level of import transactions necessary to qualify for BRASS processing is established by the centralized processing center where the application will be submitted and is determined differently based on whether the requested port(s) of entry is along the northern or southern border.

(i) *Northern border.* On the northern border, the number of import transactions with the same shipper or manufacturer and the same importer at the port(s) of entry where the shipments will be presented for BRASS processing is considered.

(ii) *Southern border.* On the southern border, the number of import transactions with the same shipper or manufacturer, importer, and commodity at the port(s) of entry where the shipments will be presented for BRASS processing is considered.

(3) *Compliance rate.* The examination compliance rate for the qualifying importations must meet Customs requirements, as established by the centralized processing center where the application will be submitted.

(c) *Application procedure.* To participate in the BRASS Program, a broker or an importer who files his own entries must submit an application for each commodity to be processed, accompanied by a representative sample of an actual commercial invoice for the product(s) sought to be processed under BRASS, to the appropriate BRASS Processing Center. Participants already in the former Line Release Program do not need to reapply for participation in the BRASS Program, provided they conduct their business in a manner consistent with the administrative portions of this subpart. An application is filed on Customs Form (CF) 7600 (Application for BRASS). On the application, the applicant must provide, among other information, identification information on any other party, such as the shipper or manufacturer of the qualifying merchandise, that may be involved with the proposed BRASS transactions. Each of the parties identified will be evaluated to determine whether they are of good character. (Copies of the CF 7600 are

available at any Customs BRASS port of entry. Additional information to be submitted on the CF 7600 is explained in the BRASS Handbook.)

(d) *Notice of action on application.* Following an evaluation of the information submitted on the CF 7600 and Customs determination as to whether the applicant, any other party listed on the application, and the merchandise meet the standards set forth in this section, the appropriate BRASS Processing Center will notify the applicant in writing as to whether the application is approved or denied. (Where an application is incomplete or otherwise contains information that cannot be verified by the appropriate BRASS Processing Center, it will be returned for clarification.) When an application is approved, Customs assigns the appropriate number of C–4 identifiers, which are to be used for those shipments that will be processed through BRASS. (A C–4 identifier (Common Commodity Classification Code), is a unique, four-element bar code assigned by the appropriate BRASS Processing Center that identifies the shipper or manufacturer, importer, filer, and commodity.) When an application is denied, Customs will issue a notice of nonselection to the applicant. The notice of nonselection will state the reason(s) for the nonselection and inform the applicant that he may administratively appeal the nonselection decision in accordance with the procedures set forth in § 142.46.

(e) *Grounds for denial.* The BRASS Processing Center may deny an application for any of the following reasons:

(1) A reputation imputing to the applicant criminal, dishonest, or unethical conduct, or a record of that conduct;

(2) Failure of the merchandise to meet the standards set forth in this section;

(3) Evidence that the application contains false or misleading information concerning a material fact; or

(4) A determination is made that participation in the BRASS Program would endanger the revenue or security of the Customs area.

§ 142.43 Responsibilities of participant accepted for BRASS processing.

When approved to participate in the BRASS Program, the applicant is denominated an ''entry filer'' for BRASS purposes. Entry filers agree to the following responsibilities:

(a) *BRASS entry number range.* Entry filers must provide the local port director, in writing, with a range of numbers for BRASS processing use, so that Customs can assign a BRASS entry number automatically to each BRASS transaction. A separate range must be provided for each BRASS site and mode of transportation. Entry filers must not assign these numbers to other import transactions. As the previously supplied range nears exhaustion, the entry filer must provide the local port director with new ranges of BRASS entry numbers;

(b) *C–4 identifier.* Entry filers are responsible for the proper preparation, distribution, and use of C–4 identifier(s). If multiple commodities are to be processed at a designated location, then the C–4 identifier assigned for each commodity must be used. When multiple commodity processing is desired, the entry filer should consult with the local port director as to the number of commodities allowed to be processed per shipment at the port;

(c) *Notification of changes in information set forth on application.* Entry filers must notify Customs immediately of any changes in information provided on the originally-approved application by submitting a corrected BRASS application, with a copy of the originally-approved application. This includes any changes regarding the shipper or manufacturer or the commodity; and

(d) *Changing election of release procedure.* Entry filers who wish to change their election of release procedure for BRASS shipments (from entry or immediate delivery to the other) from that approved in their initial BRASS application must request such change in writing. If the release procedure is to be changed permanently, the request must include the date the change is to be effective and must be submitted to the BRASS Processing Center that issued the C–4 identifier. If the release procedure is to be changed temporarily, the request must include the date the releases are to return to the release procedure originally approved. (Further information concerning requests for a change in BRASS processing can be found in the BRASS Handbook.)

§ 142.44 BRASS processing procedures.

(a) *BRASS processing procedures for motor carriers.*—(1) *Expedited processing and release.* A shipment of merchandise arriving by motor carrier is expeditiously processed and released under the BRASS Program when:

(i) *Merchandise specially designated.* The merchandise presented is specially identified with the proper C–4 code(s) and the merchandise is presented at a designated port of entry approved to process BRASS shipments;

(ii) *Documentation required to be presented.* The documentation submitted includes an original manifest (and as many copies as the particular BRASS site requires) and an original invoice that contain the C–4 identifier (as described in § 142.42(d));

(iii) *Customs processing.* Customs assigns a BRASS processing number to the transaction from the range of numbers previously provided by the entry filer for BRASS processing; and

(iv) *Customs release.* Following the BRASS processing of the merchandise, the release information is stamped on the original manifest and the invoice documents. The motor carrier is then provided with a copy of the manifest, entry filers are provided with the invoice stamped with the BRASS entry number assigned and the appropriate C–4 identifier information, and Customs retains the original, stamped manifest and may retain any other documents submitted.

(2) *Compliance examination.* When a shipment of merchandise presented for BRASS processing is ordered by Customs to undergo a compliance examination, the entry filer must then either make an entry of the merchandise, by preparing either a Customs Form (CF) 3461 or CF 3461 Alternate, or apply for a special permit for immediate delivery of the merchandise, by preparing a CF 3461 or CF 3461 Alternate with the required supporting documentation, that utilizes the BRASS processing number assigned by Customs. Customs will not accept entry or immediate delivery documentation that does not contain the Customs-assigned BRASS entry number.

(b) *BRASS processing procedures for rail carriers.*—(1) *Expedited processing and release.* A shipment of merchandise arriving by rail carrier is expeditiously processed and released under the BRASS Program when:

(i) *Merchandise specially designated.* The merchandise presented is specially identified with the proper C–4 code(s) and the merchandise is presented at a designated port of entry approved to process BRASS shipments. The BRASS rail program is limited to rail AMS carriers;

(i) *Data required to be presented.* The C–4 identifier (as described in § 142.42(d)) must be submitted electronically with the manifest; and

(ii) *Customs processing.* Customs assigns a BRASS entry number to the transaction from the range of numbers previously provided by the entry filer for BRASS processing; and

(iv) *Customs release.* Following the BRASS processing of the merchandise, the release information is electronically sent to the entry filer and to the carrier.

(2) *Compliance examination.* When a shipment of merchandise presented for BRASS processing is ordered by Customs to undergo a compliance examination, the entry filer must then either make an entry of the merchandise, by preparing either a Customs Form (CF) 3461 or 3461 Alternate, or apply for a special permit for immediate delivery of the merchandise, by preparing a CF 3461 or CF 3461 Alternate with the required supporting 22 documentation, that utilizes the BRASS processing number assigned by Customs. Customs will not accept entry or immediate delivery documentation which does not contain the Customs-assigned BRASS entry number.

§ 142.45 Revocation of BRASS participation.

(a) *Immediate revocation.* The appropriate BRASS Processing Center or port director may immediately revoke a participant's BRASS privileges for any of the following reasons:

(1) The application contained false or misleading information concerning a material fact;

(2) Any of the parties listed on the application is subsequently indicted for, convicted of, or has committed acts which would constitute any felony or misdemeanor under United States Federal or State law. In the absence of an indictment, conviction, or other legal process, Customs must have probable cause to believe the proscribed acts occurred;

(3) An entry filer allows an unauthorized person or entity to use his BRASS processing privileges;

(4) An entry filer refuses or otherwise fails to follow any proper order of a Customs officer or any Customs order, rule, or regulation;

(5) Reasonable grounds exist to believe that Federal rules and regulations pertaining to public health or safety, Customs, or other inspectional activities have not been followed;

(6) Evidence of any subsequent dishonest conduct by any of the parties listed on the application; or

(7) Continuation in the BRASS Program would endanger the revenue or security of the Customs area.

(b) *Proposed revocation.* The appropriate BRASS Processing Center or port director may propose to revoke a participant's BRASS privileges for any of the following reasons:

(1) The entry filer fails to adhere to the conditions or restrictions imposed by the BRASS Program; or

(2) The entry filer does not maintain the minimal number of qualifying import transactions for a period of one year.

(c) *Notice of adverse action.* When a decision to revoke an entry filer's participation in the BRASS Program is made, the appropriate BRASS Processing Center will notify the participant in writing. The notice will indicate whether the action is effective immediately or is proposed and will include the appropriate directions and information the nature of the decision requires:

(1) *Immediate revocation.* Where the revocation of participation is effective immediately, the notice issued will be a notice of immediate revocation. The notice of immediate revocation will direct the entry filer to cease using his C–4 identifier on import transactions, state the reason(s) for the revocation decision, and inform the entry filer that he may administratively appeal the revocation decision in accordance with the procedures set forth in § 142.46.

(2) *Proposed revocation.*—(i) *Preliminary notice.* Where the revocation of participation is proposed, the notice issued will be a notice of proposed revocation. The notice of proposed revocation will inform the entry filer that he may continue to use his C–4 identifier on import transactions until a notice of revocation is issued, state the reason(s) for the proposed revocation, and inform the participant that he may file a response with the BRASS Processing Center that addresses the grounds for the action proposed within 30 calendar days of the date of issuance of the notice of proposed revocation. The entry filer may respond by accepting responsibility, explaining extenuating circumstances, and/or providing rebuttal evidence.

(ii) *Final notice.*—(A) *Based on nonresponse.* If the entry filer does not respond to the notice of proposed revocation, the BRASS Processing Center will issue a notice of revocation 60 calendar days after the date of issuance of the notice of proposed revocation. The notice of revocation will direct the entry filer to cease using his C–4 identifier on import transactions, state the reason(s) for the revocation decision, and inform the entry filer that he may administratively appeal the revocation decision in accordance with the procedures set forth in § 142.46.

(B) *Based on response.* If the entry filer files a timely response, the BRASS Processing Center will issue a final determination regarding the entry filer's participation in the BRASS Program within 30 calendar days of the date the entry filer's response is received by the BRASS Processing Center. If this final determination is adverse, then the notice of revocation will direct the entry filer to cease using his C–4 identifier on import transactions, state the reason(s) for the revocation decision, and inform the entry filer that he may administratively appeal the revocation decision in accordance with the procedures set forth in § 142.46.

§ 142.46 Appeals regarding decisions concerning BRASS participation.

A BRASS Program participant who receives a notice of revocation or a BRASS Program applicant who receives a notice of nonselection for participation in the BRASS Program may administratively appeal Customs decision by filing an appeal in writing within 30 calendar days of the date of issuance of the notice of adverse action (nonselection or revocation). Appeals must be filed in duplicate and must set forth the appellant's responses to the grounds specified in the respective notice issued.

(a) *The Director of Field Operations.* The first appeal is to the Director of Field Operations at the Customs Management Center that oversees the BRASS Processing Center that issued the notice of adverse action (nonselection or revocation). Within 60 days of receipt of the appeal, the Director of Field Operations, or his designee, will make a determination regarding the appeal and notify the appellant of the decision in writing. If the determination is adverse to the appellant, the notice of appeal decision will state the reason(s) for the adverse determination and inform the appellant that within 30 calendar days of the date of issuance of the appeal decision he may administratively appeal the decision to the final level of appeal: The Assistant Commissioner, Office of Field Operations.

(b) *The Assistant Commissioner.* The final appeal is to the Assistant Commissioner, Office of Field Operations, U.S. Customs Service, 1300 Pennsylvania Avenue, Washington, DC 20229. Within 60 days of receipt of the appeal, the Assistant Commissioner, or his designee, will make a determination regarding the appeal and notify the appellant of the decision in writing. If the determination is adverse to the appellant, the notice of appeal decision

will state the reason(s) for the adverse determination.

Charles W. Winwood,

Acting Commissioner of Customs.

Approved: January 29, 2002.

Timothy E. Skud,

Acting Deputy Assistant Secretary of the Treasury.

[FR Doc. 02–2466 Filed 1–31–02; 8:45 am]

BILLING CODE 4820–02–P

DEPARTMENT OF THE TREASURY

Internal Revenue Service

26 CFR Part 301

[REG–120135–01]

RIN 1545–AY94

Definition of Agent for Certain Purposes

AGENCY: Internal Revenue Service (IRS), Treasury.

ACTION: Notice of proposed rulemaking.

SUMMARY: This document contains proposed regulations relating to the definition of agent for certain purposes. The proposed regulations clarify that the term agent in certain provisions of section 6103 of the Internal Revenue Code includes contractors.

DATES: Written and electronic comments and requests for a public hearing must be received by May 2, 2002.

ADDRESSES: Send submissions to CC:ITA:RU (REG–120135–01), room 5226, Internal Revenue Service, POB 7604, Ben Franklin Station, Washington, DC 20044. Submissions may be delivered Monday through Friday between the hours of 8 a.m. and 5 p.m. to CC:ITA:RU (REG–120135–01), Courier's Desk, Internal Revenue Service, 1111 Constitution Avenue, NW., Washington, DC. Alternatively, taxpayers may submit comments electronically via the Internet by selecting the ''Tax Regs'' option on the IRS Home Page, or by submitting comments directly to the IRS Internet site: *http://www.irs.ustreas.gov/tax_regs/regslist.html.*

FOR FURTHER INFORMATION CONTACT: Helene R. Newsome, 202–622–4580 (not a toll-free number).

SUPPLEMENTARY INFORMATION:

Background

Generally, returns and return information are confidential under section 6103 of the Internal Revenue Code (Code) unless a specific statutory exception applies. In cases of non-tax-related disclosures, returns and return information generally may only be disclosed to officers and employees of Federal, state, and local government agencies, and not to contractors or agents of such agencies. In certain limited circumstances, however, Congress has permitted disclosures to agents of these agencies. See sections 6103(l)(6)(B), 6103(l)(12), 6103(m)(2), 6103(m)(4), 6103(m)(5), and 6103(m)(7).

This document contains proposed regulations that clarify that the term agent in sections 6103(l) and (m) includes contractors. Clarification that the term agent includes contractors is necessary for the purpose of bringing certain statutory grants of disclosure authority into alignment with the reality of many agencies' operations. Agencies generally procure the services of third parties under public contracting laws, which do not necessarily correlate with common law concepts of agent. This clarification is also consistent with Congressional intent. For example, the Senate Finance Committee, in amending section 6103(m)(2), stated, ''Agents are those who are engaged directly in performing or assisting in collection functions for the federal government, presumably, private collection agencies who have contracted with the government to collect claims . . .'' S. Rep. No. 97–378, at 15 (1982).

This clarification does not provide any new disclosure authority, nor does it authorize the disclosure of return information to contractors that Congress has not previously specifically authorized in the Code. With regard to protection of taxpayer data, agents/contractors are subject to safeguard requirements, redisclosure prohibitions, and civil and criminal penalties for unauthorized disclosures. Accordingly, the proposed regulations do not have an impact on taxpayer privacy.

Special Analyses

It has been determined that this notice of proposed rulemaking is not a significant regulatory action as defined in Executive Order 12866. Therefore, a regulatory assessment is not required. It also has been determined that section 553(b) of the Administrative Procedure Act (5 U.S.C. chapter 5) and the Regulatory Flexibility Act (5 U.S.C. chapter 6) do not apply to these regulations, and, therefore, a Regulatory Flexibility Analysis is not required. Pursuant to section 7805(f), this notice of proposed rulemaking will be submitted to the Chief Counsel of the Small Business Administration for comment on its impact on small businesses.

Comments and Request for a Public Hearing

Before these proposed regulations are adopted as final regulations, consideration will be given to any electronic and written comments (a signed original and eight (8) copies) that are submitted timely to the IRS. The IRS and Treasury Department request comments on the clarity of the proposed rule and how it may be made easier to understand. All comments will be available for public inspection and copying. A public hearing may be scheduled if requested in writing by a person that timely submits written comments. If a public hearing is scheduled, notice of the date, time, and place for the hearing will be published in the **Federal Register**.

Drafting Information

The principal author of these regulations is Helene R. Newsome, Office of the Associate Chief Counsel (Procedure & Administration), Disclosure & Privacy Law Division.

List of Subjects in 26 CFR part 301

Employment taxes, Estate taxes, Excise taxes, Gift taxes, Income taxes, Penalties, Reporting and recordkeeping requirements.

Proposed Amendments to the Regulations

Accordingly, 26 CFR part 301 is proposed to be amended as follows:

PART 301—PROCEDURE AND ADMINISTRATION

Paragraph 1. The authority citation for part 301 is amended by adding an entry in numerical order to read as follows:

Authority: 26 U.S.C. 7805 * * *
Section 301.6103(l)–1 also issued under 26 U.S.C. 6103(q); * * *
Section 301.6103(m)–1 also issued under 26 U.S.C. 6103(q); * * *

Par. 2. Section 301.6103(l)–1 is added to read as follows:

§ 301.6103(l)–1 Disclosure of returns and return information for purposes other than tax administration.

(a) *Definition.* For purposes of applying the provisions of section 6103(l) of the Internal Revenue Code, the term *agent* includes a contractor.

(b) *Effective date.* This section is applicable on or after the date of publication of the Treasury decision adopting these regulations as final regulations in the **Federal Register**.

Par. 3. Section 301.6103(m)–1 is added to read as follows:

§ 301.6103(m)–1 Disclosure of taxpayer identity information.

(a) *Definition.* For purposes of applying the provisions of section 6103(m) of the Internal Revenue Code, the term *agent* includes a contractor.

(b) *Effective date.* This section is applicable on or after the date of publication of the Treasury decision adopting these regulations as final regulations in the **Federal Register**.

Robert E. Wenzel,

Deputy Commissioner of Internal Revenue.

[FR Doc. 02–2533 Filed 1–31–02; 8:45 am]

BILLING CODE 4830–01–P

DEPARTMENT OF VETERANS AFFAIRS

38 CFR Part 20

RIN 2900–AK71

Board of Veterans' Appeals: Rules of Practice—Appeal Withdrawal

AGENCY: Department of Veterans Affairs.

ACTION: Proposed rule.

SUMMARY: The Department of Veterans Affairs (VA) proposes amending a Board of Veterans' Appeals Rule of Practice to remove an unnecessary restriction on who may withdraw an appeal to the Board of Veterans' Appeals and to clarify appeal withdrawal procedures.

DATES: Comments must be received on or before April 2, 2002.

ADDRESSES: Mail or hand-deliver written comments to: Director, Office of Regulations Management (02D), Department of Veterans Affairs, 810 Vermont Ave., NW., Room 1154, Washington, DC 20420; or fax comments to (202) 273–9289; or e-mail comments to *''OGCRegulations@mail.va.gov''.* Comments should indicate that they are submitted in response to ''RIN 2900–AK71.'' All comments received will be available for public inspection in the Office of Regulations Management, Room 1158, between the hours of 8 a.m. and 4:30 p.m., Monday through Friday (except holidays).

FOR FURTHER INFORMATION CONTACT: Steven L. Keller, Senior Deputy Vice Chairman, Board of Veterans' Appeals, Department of Veterans Affairs, 810 Vermont Avenue, NW., Washington, DC 20420, (202) 565–5978.

SUPPLEMENTARY INFORMATION: Initial decisions on claims for Federal veterans' benefits are made at VA field offices throughout the nation. Claimants may appeal those decisions to the Board of Veterans' Appeals (Board).

Appellants may appoint a representative, typically a state or national veterans' service organization or an attorney-at-law, to assist them and act on their behalf throughout the appeal process. The Board's current Rule of Practice 204(c) (38 CFR 20.204(c)) bars an appellant's representative from withdrawing without the appellant's written consent a Notice of Disagreement or a Substantive Appeal (documents filed to initiate and to complete an appeal to the Board, respectively) that the appellant filed personally.

VA proposes removing the restriction on a representative's authority to withdraw an appeal. VA believes that the restriction, adopted in the early 1960s, is an outdated and unnecessary intrusion into the relationship between appellants and their representatives which creates needless delay through unnecessary procedural complexity. Appellants appoint representatives because of the representatives' expertise in making appropriate tactical decisions about how best to pursue the appellants' interests. They entrust the representatives with any number of important procedural decisions. While an appellant could contractually limit the authority of his or her representative, VA believes that those decisions are best left to the parties.

This proposed amendment would also fill in currently missing details about appeal withdrawal filing procedures, such as where to file, what to include in the filing, and the effect of filing. Among other things, an appellant or representative would file an appeal withdrawal with the local VA regional office, called the ''agency of original jurisdiction'' in the proposed rule, up until the time that they receive notice that the appeal has been transferred to the Board. (Such notice is required by 38 CFR 19.36.) Thereafter, they would file a withdrawal directly with the Board. The withdrawal would be effective when received by the agency of original jurisdiction up until the time the appeal is transferred to the Board. Thereafter, the withdrawal would be effective upon receipt by the Board.

VA also proposes removing the statement in the Board's current Rule of Practice 204(c) that the agency of original jurisdiction may not withdraw a Notice of Disagreement or a Substantive Appeal because the restriction would be covered under revised 38 CFR 20.204(a).

Paperwork Reduction Act

This document contains no provisions constituting a collection of information under the Paperwork Reduction Act (44 U.S.C. 3501–3520).

Executive Order 12866

This document has been reviewed by the Office of Management and Budget Under Executive Order 12866.

Regulatory Flexibility Act

The Secretary hereby certifies that this rule would not have a significant economic impact on a substantial number of small entities as they are defined in the Regulatory Flexibility Act, 5 U.S.C. 601–612, inasmuch as this rule applies to individual claimants for veterans' benefits and does not affect such entities. Therefore, pursuant to 5 U.S.C. 605(b), this rule is exempt from the initial and final regulatory flexibility analyses requirements of sections 603 and 604.

Unfunded Mandates

The Unfunded Mandates Reform Act requires, at 2 U.S.C. 1532, that agencies prepare an assessment of anticipated costs and benefits before developing any rule that may result in an expenditure by State, local, or tribal governments, in the aggregate, or by the private sector, of $100 million or more in any given year. This rule would have no consequential effect on State, local, or tribal governments.

Catalog of Federal Domestic Assistance

There is no Catalog of Federal Domestic Assistance number for this proposed rule.

List of Subjects in 38 CFR Part 20

Administrative practice and procedure, Claims, Veterans.

Approved: January 23, 2002.

Anthony J. Principi,

Secretary of Veterans Affairs.

For the reasons set out in the preamble, VA proposes amending 38 CFR part 20 as follows:

PART 20—BOARD OF VETERANS' APPEALS: RULES OF PRACTICE

1. The authority citation for part 20 continues to read as follows:

Authority: 38 U.S.C. 501(a) and as noted in specific sections.

2. Section 20.204 is revised to read as follows:

§ 20.204 Rule 204. Withdrawal of Appeal.

(a) *When and by whom filed.* Only an appellant, or an appellant's authorized representative, may withdraw an appeal. An appeal maybe withdrawn as to any or all issues involved in the appeal.

(b) *Filing.* (1) *Form and content.* Except for appeals withdrawn on the record at a hearing, appeal withdrawals

must be in writing. They must include the name of the veteran, the name of the claimant or appellant if other than the veteran (e.g., a veteran's survivor, a guardian, or a fiduciary appointed to receive VA benefits on an individual's behalf), the applicable Department of Veterans Affairs file number, and a statement that the appeal is withdrawn. If the appeal involves multiple issues, the withdrawal must specify that the appeal is withdrawn in its entirety, or list the issue(s) withdrawn from the appeal.

(2) *Where to file.* Appeal withdrawals should be filed with the agency of original jurisdiction until the appellant or representative filing the withdrawal receives notice that the appeal has been transferred to the Board. Thereafter, file the withdrawal at the following address: Director of Administrative Service (014), Board of Veterans' Appeals, 810 Vermont Avenue, NW., Washington, DC 20420.

(3) *When effective.* Until the appeal is transferred to the Board, an appeal withdrawal is effective when received by the agency of original jurisdiction. Thereafter, it is not effective until received by the Board. A withdrawal received by the Board after the Board issues a decision final under Rule 1100(a) (§ 20.1100(a) of this part) will not be effective.

(c) *Effect of filing.* Withdrawal of an appeal will be deemed a withdrawal of the Notice of Disagreement and, if filed, the Substantive Appeal, as to all issues to which the withdrawal applies. Withdrawal does not preclude filing a new Notice of Disagreement and, after a Statement of the Case is issued, a new Substantive Appeal, as to any issue withdrawn, provided such filings would be timely under this section if the appeal withdrawn had never been filed.

(Authority: 38 U.S.C. 7105(b) and (d))

[FR Doc. 02–2428 Filed 1–31–02; 8:45 am]

BILLING CODE 8320–01–P

DEPARTMENT OF THE INTERIOR

Bureau of Land Management

43 CFR Part 3809

Fish and Wildlife Service

50 CFR Chapter I

Resubmission of Comments; Interruption of Mail Service

AGENCIES: Fish and Wildlife Service and the Bureau of Land Management, Interior.

ACTION: Resubmission of comments on specific rulemaking documents.

SUMMARY: The Office of the Secretary, along with the Fish and Wildlife Service and the Bureau of Land Management give notice to the public of the opportunity to resubmit comments on specific rulemaking documents. This action is necessitated by the possibility that some comments that were submitted by the public in response to the rulemaking documents may not have been timely received by the identified bureaus due to the shutdown of the Brentwood Postal Facility in Washington, DC, on October 21, 2001. The postal facility was closed because of the threat of anthrax contamination. This action is also necessitated because the Department's Internet access, including receipt of outside e-mail, has been shut down under court order until further notice. Comments which may have been sent to the Department by e-mail since December 4, 2001, have not been received by the Department and should be resubmitted by mail to the addresses specified herein.

DATES: Resubmittal of comments on identified rulemaking documents must be postmarked no later than February 15, 2002.

ADDRESSES: The addresses for the resubmittal of comments are as follows:

- Fish and Wildlife Service, 4401 North Fairfax Drive, Office of Policy, Directives and Management, Arlington, VA 22203, unless otherwise noted.
- Bureau of Land Management, Eastern States Office, 7450 Boston Blvd., Springfield, VA 22153, unless otherwise noted.

FOR FURTHER INFORMATION CONTACT: Duncan L. Brown, Office of the Secretary, Washington, DC 202/208–4582.

SUPPLEMENTARY INFORMATION: The purpose of this document is to allow interested parties the opportunity to resubmit comments they may have sent to the Washington, DC, office of the Fish and Wildlife Service and the Bureau of Land Management on certain identified rulemaking documents. This action is taken due to the closure of the Brentwood Postal Facility, Washington, DC, has caused a delay in the delivery of mail to the Department's Washington, DC, agency addresses. In addition, the Department's Internet access, including receipt of outside e-mail, has been shut down under court order until further notice and comments which were sent by e-mail to the Department by e-mail since December 4, 2001, have not been received by the Department. To guarantee the collection of all responsive comments, the Department has decided that it will extend to interested parties the opportunity to resubmit their written comments on the identified rulemaking documents to the agency addresses identified in the **ADDRESSES** section of this document. The affected rulemaking documents are identified as follows:

Proposed Rulemaking Documents

FWS Migratory Bird Hunting—Light Goose Populations—Correction, RIN 1018–AI07
FWS Proposed Critical Habitat—3 S.Cal. Coastal Plants, RIN 1018–AG88
FWS Proposed Critical Habitat—Purple Amole, RIN 1018–AG75
FWS Proposed Critical Habitat—Sant Cruz Tarplant, RIN 1018–AG73
FWS Listing Showy Stickweed as Endangered—Reopening of Comments, RIN 1018–AF75
FWS Revised List of Migratory Birds—Proposed Rule, RIN 1018–AB72
FWS Rota Bridled White-eye Listing as Endangered, RIN 1018–AI16
FWS Kneeland Prairie Penny-cress Critical Habitat—Proposed Rule, RIN 1018–AG92
FWS Sacramento Mtns. Checkerspot Butterfly—Reopening of Comment Period/Public Hearing, RIN 1018–AH40
FWS Managing Harvest of Light Goose Populations—Proposed Rule, RIN 1018–AI07
FWS Reopening of Comment Period and Availability of Draft EIS for Monterey Spineflower Critical Habitat Determination, RIN 1018–AH04
FWS Reopening of Comment Period and Availability of Draft EA for Robust Spineflower Critical Habitat Determination, RIN 1018–AH83
FWS Reopening of Comment Period and Availability of Draft EA for Scotts Valley Spineflower Critical Habitat Determination, FIN 1018–AH82
FWS Endangered Status for the Sacramento Mtns. Checkerspot Butterfly—Proposed Rule, RIN 1018–AH40
FWS Migratory Bird Hunting—Proposed Migratory Bird Hunting Regulations, RIN 1018–AH79
BLM Proposed Rule—Mining Claims Under the General Mining Laws; Surface Management (43 CFR part 3809), RIN 1004–AD44

Dated: January 15, 2002.

P. Lynn Scarlett,

Assistant Secretary—Policy Management and Budget.

[FR Doc. 02–1917 Filed 1–31–02; 8:45 am]

BILLING CODE 4310–RK–M

FEDERAL COMMUNICATIONS COMMISSION

47 CFR Part 73

[DA 02–99, MM Docket No. 02–3, RM–10349]

Digital Television Broadcast Service; Lakin, KS

AGENCY: Federal Communications Commission.

ACTION: Proposed rule.

SUMMARY: The Commission requests comments on a petition filed by Smoky Hills Public Television, licensee of noncommercial educational station KSWK–TV, NTSC channel *3, Lakin, Kansas, requesting the substitution of DTV channel *8 for DTV channel *23. DTV Channel *8 can be allotted to Lakin, Kansas, in compliance with the principle community coverage requirements of Section 73.625(a) at reference coordinates (37–49–38 N. and 101–06–35 W.). As requested, we propose to allot DTV Channel *8 to Lakin with a power of 100 and a height above average terrain (HAAT) of 141 meters.

DATES: Comments must be filed on or before March 11, 2002, and reply comments on or before March 26, 2002.

ADDRESSES: Federal Communications Commission, 445 12th Street, SW., Room TW–A325, Washington, DC 20554. In addition to filing comments with the FCC, interested parties should serve the petitioner, or its counsel or consultant, as follows: Barry S. Persh, Dow, Lohnes & Albertson, PLLC, 1200 New Hampshire Avenue, NW., Suite 800, Washington, DC 20036 (Counsel for Smoky Hills Public Television).

FOR FURTHER INFORMATION CONTACT: Pam Blumenthal, Mass Media Bureau, (202) 418–1600.

SUPPLEMENTARY INFORMATION: This is a synopsis of the Commission's Notice of Proposed Rule Making, MM Docket No. 02–99, adopted January 17, 2002, and released January 18, 2002. The full text of this document is available for public inspection and copying during regular business hours in the FCC Reference Information Center, Portals II, 445 12th Street, SW., Room CY–A257, Washington, DC 20554. This document may also be purchased from the Commission's duplicating contractor, Qualex International, Portals II, 445 12th Street, SW., Room CY–B402, Washington, DC 20554, telephone 202–863–2893, facsimile 202–863–2898, or via e-mail *qualexint@aol.com.*

Provisions of the Regulatory Flexibility Act of 1980 do not apply to this proceeding.

Members of the public should note that from the time a Notice of Proposed Rule Making is issued until the matter is no longer subject to Commission consideration or court review, all *ex parte* contacts are prohibited in Commission proceedings, such as this one, which involve channel allotments. See 47 CFR 1.1204(b) for rules governing permissible *ex parte* contacts.

For information regarding proper filing procedures for comments, see 47 CFR 1.415 and 1.420.

List of Subjects in 47 CFR Part 73

Television, Digital television broadcasting.

For the reasons discussed in the preamble, the Federal Communications Commission proposes to amend 47 CFR part 73 as follows:

PART 73—TELEVISION BROADCAST SERVICES

1. The authority citation for part 73 continues to read as follows:

Authority: 47 U.S.C. 154, 303, 334, and 336.

§ 73.622 [Amended]

2. Section 73.622(b), the Table of Digital Television Allotments under Kansas is amended by removing DTV Channel ''*23'' and adding DTV Channel ''*8'' at Lakin.

Federal Communications Commission.

Barbara A. Kreisman,

Chief, Video Services Division, Mass Media Bureau.

[FR Doc. 02–2438 Filed 1–31–02; 8:45 am]

BILLING CODE 6712–01–P

FEDERAL COMMUNICATIONS COMMISSION

47 CFR Part 73

[DA No. 02–60; MM Docket No. 01–298; RM–10298]

Radio Broadcasting Services; Camden, AL

AGENCY: Federal Communications Commission.

ACTION: Proposed rule; dismissal.

SUMMARY: This document dismisses a proposal filed by Charles Crawford requesting the allotment of Channel 280A at Camden, Alabama, as the community's second FM broadcast service. *See* 66 FR 53755, October 24, 2001. As stated in the document, a showing of continuing interest is required before a channel will be allotted. Since there has been no interest expressed for the allotment of a channel at Camden, the *Report and Order* dismisses the proposal.

FOR FURTHER INFORMATION CONTACT: Kathleen Scheuerle, Mass Media Bureau, (202) 418–2180

SUPPLEMENTARY INFORMATION: This is a summary of the Commission's Report and Order, MM Docket No. 01–298, adopted January 2, 2002, and released January 11, 2002. The full text of this Commission decision is available for inspection and copying during regular business hours in the FCC Reference Information Center, Portals II, 445 12th Street, SW., Room CY–A257, Washington, DC 20554. The complete text of this decision may also be purchased from the Commission's duplicating contractor, Qualex international, Portals II, 445 12th Street, SW., Room CY–B402, Washington, DC 20554, telephone 202–863–2893, facsimile 202–863–2898, or via e-mail *qualexint@aol.com.*

Federal Communications Commission.

John A. Karousos,

Chief, Allocations Branch, Policy and Rules Division, Mass Media Bureau.

[FR Doc. 02–2437 Filed 1–31–02; 8:45 am]

BILLING CODE 6712–01–P

DEPARTMENT OF TRANSPORTATION

Research and Special Programs Administration

49 CFR Parts 107, 171, 172, 173, 177, 178, and 180

[Docket No. RSPA–98–3554 (HM–213)]

RIN 2137–AC90

Hazardous Materials: Requirements for Cargo Tanks; Correction and Extension of Comment Period

AGENCY: Research and Special Programs Administration (RSPA), DOT.

ACTION: Proposed rule; correction and extension of comment period.

SUMMARY: On December 4, 2001, RSPA published a notice of proposed rulemaking to update and clarify the regulations on the construction and maintenance of cargo tank motor vehicles. In response to requests by members of the regulated community, the comment period for the proposed rule is extended until April 4, 2002, to provide commenters additional time. In addition, we are correcting a minor citation error in the proposed regulatory text.

DATES: Submit comments by April 4, 2002. To the extent possible, we will consider comments received after this

date in making our decision on a final rule.

ADDRESSES: Submit comments to the Dockets Management System, U.S. Department of Transportation, Room PL 401, 400 Seventh Street, SW., Washington, DC 20590–0001. Comments should identify Docket Number RSPA–98–3554 (HM–213), and be submitted in two copies. If you wish to receive confirmation of receipt of your written comments, include a self-addressed, stamped postcard. You may also e-mail comments by accessing the Dockets Management System web site at ''*http://dms.dot.gov/*'' and following the instructions for submitting a document electronically. If you prefer, you can fax comments to 202–493–2251 for filing in the docket.

The Dockets Management System is located on the Plaza level of the Nassif Building at the Department of Transportation at the above address. You can review public dockets there between the hours of 9 a.m. and 5 p.m., Monday through Friday, except federal holidays. You can also review comments on-line at the DOT Dockets Management System web site at ''*http://dms.dot.gov/*.''

We are experiencing some delays in mail deliveries as a result of ongoing efforts to ensure that mail is not contaminated with infectious or harmful materials. We encourage you to take advantage of the opportunities provided by the DOT Dockets Management System to submit comments electronically or by fax.

FOR FURTHER INFORMATION CONTACT: Michael Johnsen (202) 366–8553, Office of Hazardous Materials Standards, Research and Special Programs Administration.

SUPPLEMENTARY INFORMATION:

Background

On December 4, 2001, the Research and Special Programs Administration (RSPA, we) published a notice of proposed rulemaking (NPRM) (66 FR 63096) under Docket RSPA–98–3554 (HM–213) to update and clarify the regulations on the construction and maintenance of cargo tank motor vehicles. The proposed rule also addressed three National Transportation Safety Board (NTSB) recommendations and several petitions for rulemaking.

Under 49 Code of Federal Regulations (CFR) 1.73(d), the Federal Motor Carrier Safety Administration (FMCSA) is delegated authority to enforce the Hazardous Materials Regulations (HMR; 49 CFR parts 171–180) , with particular emphasis on highway transportation, including regulations for construction and maintenance of cargo tank motor vehicles. FMCSA and RSPA work closely with the regulated industry through educational assistance activities and FMCSA's compliance and enforcement program. During these activities, we identified several areas in the current regulations that need updating or clarification. In addition, we received requests for clarification of the regulations and petitions for rulemaking. NTSB has also made several safety recommendations concerning cargo tank motor vehicles. In the NPRM, we proposed revisions that would apply to all cargo tank motor vehicles, and revisions that would apply to certain specification cargo tank motor vehicles used to transport certain ladings.

On December 27, 2001, the Truck Trailer Manufacturers Association (TTMA) requested an extension of the comment period (closing date of February 4, 2002). TTMA requested the extension because the TTMA Tank Conference Engineering Committee will be meeting February 26–27, 2002, in Los Angeles, CA to discuss a number of issues addressed in docket HM–213. TTMA asked for additional comment time to properly acknowledge all of its members' thoughts and concerns. In addition, on January 11, 2002, a representative of the National Propane Gas Association, National Tank Truck Carriers, Inc., Petroleum Marketers Association of America, and the Petroleum Transportation and Storage Association requested an extension of the comment period to allow for detailed analysis. RSPA agrees that extending the comment period on this technically complex rulemaking is in the public interest because it will assure thorough consideration of the proposals by all affected entities. Therefore, we are extending the comment period to April 4, 2002.

In addition, we discovered an incorrect reference in the NPRM. On page 63122, under the proposed regulatory text language for § 180.405 (o)(1), the reference ''§ 178.337–11(a)(2)'' should read ''§ 178.337–8(a)(4).''

Accordingly, the HM–213 NPRM is corrected as follows:

Correction

PART 180—[CORRECTED]

§ 180.405 [Corrected]

In proposed rule FR Doc. 01–28117, beginning on page 63096 in the issue of December 4, 2001, make the following correction to the proposed regulatory text:

On page 63122, in the third line of column 3, in § 180.405(o)(1), correct § 178.337–11(a)(2)'' to read ''§ 178.337–8(a)(4)''.

Issued in Washington, DC on January 29, 2002 under authority delegated in 49 CFR part 106.

Robert A. McGuire,

Associate Administrator for Hazardous Materials Safety, Research and Special Programs Administration.

[FR Doc. 02–2515 Filed 1–31–02; 8:45 am]

BILLING CODE 4910–60–P

Notices

Federal Register
Vol. 67, No. 22
Friday, February 1, 2002

This section of the FEDERAL REGISTER contains documents other than rules or proposed rules that are applicable to the public. Notices of hearings and investigations, committee meetings, agency decisions and rulings, delegations of authority, filing of petitions and applications and agency statements of organization and functions are examples of documents appearing in this section.

DEPARTMENT OF AGRICULTURE

Rural Telephone Bank

Sunshine Act Meeting Notice

AGENCY: Rural Telephone Bank, USDA.

ACTION: Staff briefing for the Board of Directors.

TIME AND DATE: 2 p.m., Monday, February 11, 2002.

PLACE: Conference Room 304, Anaheim Marriott Hotel, 700 West Convention Way, Anaheim, CA.

STATUS: Open.

MATTERS TO BE DISCUSSED:

1. Progress report from business advisor.
2. November 2002 board of directors election.
3. Amendment to Affidavit of Lost Shares.
4. Current telecommunications industry issues.
5. Administrative issues.

ACTION: Board of Directors Meeting.

TIME AND DATE: 9 a.m., Tuesday, February 12, 2002.

PLACE: Conference Room Gold Key II, Anaheim Marriott Hotel, 700 West Convention Way, Anaheim, CA.

STATUS: Open.

MATTERS TO BE CONSIDERED:

The following matters have been placed on the agenda for the Board of Directors meeting:

1. Call to order.
2. Action on Minutes of the November 9, 2001, board meeting.
3. Secretary's Report on loans approved.
4. Treasurer's Report.
5. Privatization Committee Report.
6. Consideration of resolution to adopt a schedule for various actions concerning the November 2002 board of directors election.
7. Consideration of resolution to appoint Tellers for the November 2002 board of directors election.
8. Consideration of resolution to amend the Affidavit of Lost Shares.
9. Adjournment.

CONTACT PERSON FOR MORE INFORMATION: Roberta D. Purcell, Assistant Governor, Rural Telephone Bank, (202) 720–9554.

Dated: January 29, 2002.

Hilda Gay Legg,

Governor, Rural Telephone Bank.

[FR Doc. 02–2605 Filed 1–30–02; 12:19 pm]

BILLING CODE 3410–15–P

ARCHITECTURAL AND TRANSPORTATION BARRIERS COMPLIANCE BOARD

Public Rights-of-Way Access Advisory Committee; Meeting

AGENCY: Architectural and Transportation Barriers Compliance Board.

ACTION: Notice of meeting.

SUMMARY: The Architectural and Transportation Barriers Compliance Board (Access Board) established a Public Rights-of-Way Access Advisory Committee (Committee) to assist the Board in developing a proposed rule on accessibility guidelines for newly constructed and altered public rights-of-way covered by the Americans with Disabilities Act of 1990 and the Architectural Barriers Act of 1968. This document announces the next meeting of the technical assistance sub-committee of that Committee, which will be open to the public.

DATES: The meeting of the sub-committee is scheduled for February 20 and 21, 2002, beginning at 9 a.m. and ending at 5 p.m. each day.

ADDRESSES: The meeting will be held at the Marriott City Center Hotel, 520 Southwest Broadway, Portland, Oregon 97205.

FOR FURTHER INFORMATION CONTACT: Scott Windley, Office of Technical and Information Services, Architectural and Transportation Barriers Compliance Board, 1331 F Street, NW., suite 1000, Washington, DC, 20004–1111. Telephone number (202) 272–5434 extension 125 (Voice); (202) 272–5449 (TTY). E-mail *windley@access-board.gov.* This document is available in alternate formats (cassette tape, Braille, large print, or ASCII disk) upon request. This document is also available on the Board's Internet site, *http://www.access-board.gov/prowmtg.htm.*

SUPPLEMENTARY INFORMATION: On October 20, 1999, the Architectural and Transportation Barriers Compliance Board (Access Board) published a notice appointing members to a Public Rights-of-Way Access Advisory Committee (Committee). 64 FR 56482 (October 20, 1999). The objectives of the Committee include providing recommendations for developing a proposed rule addressing accessibility guidelines for newly constructed and altered public rights-of-way covered by the Americans with Disabilities Act of 1990 and the Architectural Barriers Act of 1968, recommendations regarding technical assistance issues, and guidance for best practices for alterations in the public rights-of-way.

On January 10, 2001, the Committee presented its recommendations on accessible public rights-of-way in a report entitled ''Building a True Community''. The report is available on the Access Board's Web site at *www.access-board.gov* or can be ordered by calling the Access Board at (800) 872–2253 (voice) or (800) 993–2822 (TTY).

At its February meeting, the technical assistance sub-committee will continue to address the development and format of technical assistance materials relating to public rights-of-way. The sub-committee meeting will be open to the public and interested persons can attend the meeting and communicate their views. Members of the public will have an opportunity to address the sub-committee on issues of interest to them and the sub-committee during the public comment period at the beginning of each meeting day. Members of the public may participate on subcommittees of the Committee. Additionally, all interested persons will have the opportunity to comment when the proposed accessibility guidelines for public rights-of-way are issued in the **Federal Register** by the Access Board.

Individuals who require sign language interpreters or real-time captioning systems should contact Scott Windley by February 12, 2002. Notices of future

meetings will be published in the **Federal Register**.

Lawrence W. Roffee,

Executive Director.

[FR Doc. 02–2520 Filed 1–31–02; 8:45 am]

BILLING CODE 8150–01–P

COMMITTEE FOR PURCHASE FROM PEOPLE WHO ARE BLIND OR SEVERELY DISABLED

Agency Information Collection Activities Proposed Information Collection; Comment Request

ACTION: Submission for OMB review; comment request.

AGENCY: Committee for Purchase from People Who Are Blind or Severely Disabled.

SUMMARY: The Committee has submitted to the Office of Management and Budget for their review the following collection as required by the Paperwork Reduction Act (44 U.S.C. chapter 35).

Committee Form 401—Initial Certification—Qualified Nonprofit Agency Serving People Who Are Blind

Committee From 402—Initial Certification—Qualified Nonprofit Agency Serving People Who Are Severely Disabled

DATES: Interested persons are invited to submit comments about the collection on or before March 4, 2002.

ADDRESSES: Written comments should be addressed to the Office of Information and Regulatory Affairs, Attention: Lauren Wittenberg, Desk Officer, Office of Management and Budget, 725 17th Street, NW., Room 10202, New Executive Office Building, Washington, DC 20503 or be electronically e-mailed to *Lauren_Wittenbreg@omb.eop.gov.* Requests for copies of documents pertaining to the collection should be addressed to Committee for Purchase From People Who Are Blind or Severely Disabled, Attention: Janet Yandik, Information Management Specialist, Jefferson Plaza 2, Suite 10800, 1421 Jefferson Davis Highway, Arlington, VA 22202–3259 or e-mailed to *jyandik@jwod.gov.*

SUPPLEMENTARY INFORMATION: The Committee has two initial certification forms, one for nonprofit agencies serving people who are blind and one for nonprofit agencies primarily serving people who have other severe disabilities. The information included on the forms is required to ensure that nonprofit agencies requesting to participate in the Committee's program meet the requirements of the Javits-Wagner-O'Day Act (JWOD), 41 USC 46–48c.

Title: Initial Certification—Qualified Nonprofit Agency Serving People Who Are Blind, Committee Form 401

OMB Number: 3037–0004.

Agency Number: 3037.

Frequency: 1 time.

Affected Public: Nonprofit agencies serving people who are blind seeking to participate in the JWOD program.

Number of Respondents: 5.

Estimated Time Per Respondent: 1 hour.

Total Burden Hours: 5.

Total Annual Costs: $0.

Title: Initial Certification—Qualified Nonprofit Agency Serving People Who Are Severely Disabled, Committee Form 402.

OMB Number: 3037–0003.

Agency Number: 3037.

Frequency: 1 time.

Affected Public: Nonprofit agencies serving people who are severely disabled seeking to participate in the JWOD program.

Number of Respondents: 50

Estimated Time Per Respondent: 1 hour.

Total Burden Hours: 50.

Total Annual Costs: $0.

Sheryl D. Kennerly,

Director, Information Management.

[FR Doc. 02–2518 Filed 1–31–02; 8:45 am]

BILLING CODE 6353–01–P

COMMITTEE FOR PURCHASE FROM PEOPLE WHO ARE BLIND OR SEVERELY DISABLED

Procurement List Proposed Additions

AGENCY: Committee for Purchase From People Who Are Blind or Severely Disabled.

ACTION: Proposed additions to procurement list.

SUMMARY: The Committee is proposing to add to the Procurement List services to be furnished by nonprofit agencies employing persons who are blind or have other severe disabilities.

Comments Must be Received On or Before: March 4, 2002.

ADDRESSES: Committee for Purchase From People Who Are Blind or Severely Disabled, Jefferson Plaza 2, Suite 10800, 1421 Jefferson Davis Highway, Arlington, Virginia 22202–3259.

FOR FURTHER INFORMATION CONTACT: Sheryl D. Kennerly, (703) 603–7740.

SUPPLEMENTARY INFORMATION: This notice is published pursuant to 41 U.S.C 47(a)(2) and 41 CFR 51–2.3. Its purpose is to provide interested persons an opportunity to submit comments on the possible impact of the proposed actions.

If the Committee approves the proposed additions, the entities of the Federal Government identified in this notice will be required to procure the services listed below from nonprofit agencies employing persons who are blind or have other severe disabilities.

I certify that the following action will not have a significant impact on a substantial number of small entities. The major factors considered for this certification were:

1. The action will not result in any additional reporting, recordkeeping or other compliance requirements for small entities other than the small organizations that will furnish the services to the Government.

2. The action will result in authorizing small entities to furnish the services to the Government.

3. There are no known regulatory alternatives which would accomplish the objectives of the Javits-Wagner-O'Day Act (41 U.S.C. 46–48c) in connection with the services proposed for addition to the Procurement List. Comments on this certification are invited. Commenters should identify the statement(s) underlying the certification on which they are providing additional information.

The following services are proposed for addition to Procurement List for production by the nonprofit agencies listed:

Services

Service Type/Location: Administrative Support Services, GSA Public Buildings Service Atlanta PMC, Atlanta, Georgia.

Nonprofit Agency: Blind & Low Vision Services of North Georgia, Smyrna, Georgia.

Contract Activity: GSA, Public Buildings Service.

Service Type/Location: Commercial Facility Management, Ronald Reagan Building, Washington, DC.

Nonprofit Agency: The Chimes, Inc., Baltimore, Maryland.

Contract Activity: GSA Public Buildings Service.

Service Type/Location: Facilities Maintenance Services, U.S. Courthouse and Federal Office Building, Central Islip, New York.

Nonprofit Agency: The Corporate Source, Inc., New York, New York.

Contract Activity: GSA, Public Buildings Service.

Service Type/Location: Mailroom Operation, Internal Revenue Service-US Mint Headquarters, Washington, DC.

Nonprofit Agency: ServiceSource, Inc., Alexandria, VA.

Contract Activity: Internal Revenue Services.

Sheryl D. Kennerly,

Director, Information Management.

[FR Doc. 02–2516 Filed 1–31–02; 8:45 am]

BILLING CODE 6353–01–P

COMMITTEE FOR PURCHASE FROM PEOPLE WHO ARE BLIND OR SEVERELY DISABLED

Procurement List; Additions and Deletions

AGENCY: Committee for Purchase from People Who Are Blind or Severely Disabled.

ACTION: Additions to and Deletions from Procurement List.

SUMMARY: This action adds to the Procurement List services to be furnished by nonprofit agencies employing persons who are blind or have other severe disabilities, and deletes from the Procurement List products previously furnished by such agencies.

EFFECTIVE DATE: March 4, 2002.

ADDRESSES: Committee for Purchase From People Who Are Blind or Severely Disabled, Jefferson Plaza 2, Suite 10800, 1421 Jefferson Davis Highway, Arlington, Virginia 22202–3259.

FOR FURTHER INFORMATION CONTACT: Sheryl D. Kennerly (703) 603–7740

SUPPLEMENTARY INFORMATION: On November 16, November 30, and December 21, 2001, the Committee for Purchase From People Who Are Blind or Severely Disabled published notices (66 FR 57703, 59778 and 65876) of proposed additions to and deletions from the Procurement List:

Additions

After consideration of the material presented to it concerning capability of qualified nonprofit agencies to provide the services and impact of the additions on the current or most recent contractors, the Committee has determined that the services listed below are suitable for procurement by the Federal Government under 41 U.S.C. 46–48c and 41 CFR 51–2.4.

I certify that the following action will not have a significant impact on a substantial number of small entities. The major factors considered for this certification were:

1. The action will not result in any additional reporting, recordkeeping or other compliance requirements for small entities other than the small organizations that will furnish the services to the Government.

2. The action will not have a severe economic impact on current contractors for the services.

3. The action will result in authorizing small entities to furnish the services to the Government.

4. There are no known regulatory alternatives which would accomplish the objectives of the Javits-Wagner-O'Day Act (41 U.S.C. 46–48c) in connection with the services proposed for addition to the Procurement List.

Accordingly, the following services are added to the Procurement List.

Services

Service Type/Location: Administrative Services, US Attorney's Office-Atlanta, DOJ, 1800 US Courthouse, 75 Spring Street, Atlanta, Georgia
Contracting Activity: US Attorney's Office-Atlanta, DOJ, Atlanta, Georgia
Service Type/Location: Food Service Attendant, 174th FW/LGC, NYANG, Hancock Field, Syracuse, New York
Contracting Activity: New York Air National Guard, Syracuse, New York
Service Type/Location: Janitorial/Custodial, VA Primary Care Clinic, McHenry, Illinois
Contracting Activity: Department of Veterans Affairs, Milwaukee, Wisconsin

Deletions

I certify that the following action will not have a significant impact on a substantial number of small entities. The major factors considered for this certification were:

1. The action may not result in any additional reporting, recordkeeping or other compliance requirements for small entities.

2. The action will not have a severe economic impact on future contractors for the commodities.

3. The action will result in authorizing small entities to furnish the commodities to Government.

4. There are no known regulatory alternatives which would accomplish the objectives of the Javits-Wagner-O'Day Act (41 U.S.C. 46–48c) in connection with the products deleted from the Procurement List.

After consideration of the relevant matter presented, the committee has determined that the commodities listed below are no longer suitable for procurement by the Federal Government under 41 U.S.C. 46–48c and 41 CFR 51–2.4.

Accordingly, the following commodities are deleted from the Procurement List:

Commodities

Commodity/NSN: Calendar Pad
7510–01–450–5452
Commodity/NSN: Executive/Personal Time Management System
7530–01–458–3130
7530–01–458–3131
7510–01–458–3132
7510–01–458–3133
7530–01–458–3135
7530–01–458–3136
7510–01–458–3137
7510–01–458–3138
7530–01–458–3139
7510–01–458–3141
7530–01–458–3142
7530–01–458–3143
7530–01–458–3145
7530–01–458–3146
7510–01–458–3147
7510–01–458–3150
7530–01–458–3152
7530–01–458–3154
7530–01–458–3159
7530–01–458–3161
7530–01–458–3164
Commodity/NSN: Refill, Appointment Book
7530–01–450–5406

Sheryl D Kennerly,

Director, Information Management.

[FR Doc. 02–2517 Filed 1–31–02; 8:45 am]

BILLING CODE 6353–01–P

DEPARTMENT OF COMMERCE

International Trade Administration

Antidumping or Countervailing Duty Order, Finding, or Suspended Investigation; Opportunity To Request Administrative Review

AGENCY: Import Administration, International Trade Administration, Department of Commerce.

ACTION: Notice of opportunity to request administrative review of antidumping or countervailing duty order, finding, or suspended investigation.

Background

Each year during the anniversary month of the publication of an antidumping or countervailing duty order, finding, or suspension of investigation, an interested party, as defined in section 771(9) of the Tariff Act of 1930, as amended (the Act), may request, in accordance with section 351.213(2001) of the Department of Commerce (the Department) Regulations, that the Department conduct an administrative review of that antidumping or countervailing duty order, finding, or suspended investigation.

Opportunity To Request a Review

Not later than the last day of February 2002, interested parties may request administrative review of the following orders, findings, or suspended investigations, with anniversary dates in February for the following periods:

Antidumping duty proceedings

	Period
Antidumpting Duty Proceedings	
Brazil: Stainless Steel Bar, A–351–825	2/1/01–1/31/02
France: Certain Cut-to-Length Carbon-Quality Steel Plate, A–427–816	2/1/01–1/31/02
Germany: Sodium Thiosulfate, A–428–807	2/1/01–1/31/02
India:	
Certain Cut-to-Length Carbon-Quality Steel Plate, A–533–817	2/1/01–1/31/02
Forged Stainless Steel Flanges, A–533–809	2/1/01–1/31/02
Stainless Steel Bar, A–533–810	2/1/01–1/31/02
Certain Preserved Mushrooms, A–533–813	2/1/01–1/31/02
Indonesia:	
Certain Cut-to-Length Carbon-Quality Steel Plate, A–560–805	2/1/01–1/31/02
Certain Preserved Mushrooms, A–560–802	2/1/01–1/31/02
Melamine Institutional Dinnerware, A–560–801	2/1/01–1/31/02
Italy:	
Certain Cut-to-Length Carbon-Quality Steel Plate, A–475–826	2/1/01–1/31/02
Stainless Steel Butt-Weld Pipe Fittings, A–475–828	8/2/00–1/31/02
Japan:	
Carbon Steel Butt-Weld Pipe Fittings, A–588–602	2/1/01–1/31/02
Certain Cut-to-Length Carbon-Quality Steel Plate, A–588–847	2/1/01–1/31/02
Mechanical Transfer Presses, A–588–810	2/1/01–1/31/02
Melamine In Crystal Form, A–588–056	2/1/01–1/31/02
Stainless Steel Bar, A–588–833	2/1/01–1/31/02
Malaysia: Stainless Steel Butt-Weld Pipe Fittings, A–557–809	12/27/00–1/31/02
Philippines: Stainless Steel Butt-Weld Pipe Fittings, A–565–801	8/2/00–1/31/02
Republic of Korea:	
Certain Cut-to-Length Carbon-Quality Steel Plate, A–580–836	2/1/01–1/31/02
Stainless Steel Butt-Weld Pipe Fittings, A–580–813	2/1/01–1/31/02
Taiwan:	
Forged Stainless Steel Flanges, A–583–821	2/1/01–1/31/02
Melamine Institutional Dinnerware, A–583–825	2/1/01–1/31/02
The People's Republic of China:	
Axes/adzes A–570–803	2/1/01–1/31/02
Bars/wedges, A–570–803	2/1/01–1/31/02
Certain Preserved Mushrooms, A–570–851	2/1/01–1/31/02
Coumarin, A–570–830	2/1/01–1/31/02
Creatine Monohydrate, A–570–852	2/1/01–1/31/02
Hammers/sledges, A–570–803	2/1/01–1/31/02
Melamine Instituional Dinnerware, A–570–844	2/1/01–1/31/02
Natural Bristle Paint Brushes, A–570–501	2/1/01–1/31/02
Picks/mattocks, A–570–803	2/1/01–1/31/02
Sodium Thiosulfate, A–570–805	2/1/01–1/31/02
The United Kingdom: Sodium Thiosulfate, A–412–805	2/1/01–1/31/02
Countervailing Duty Proceedings	
France: Certain Cut-to Length Carbon Quality Steel Plate, C–427–817	1/1/01–12/31/01
India: Certain Cut-to-Length Carbon-Quality Steel Plate, A–533–818	1/1/01–12/31/01
Indonesia: Certain Cut-to-Length Carbon-Quality Steel Plate, A–560–806	1/1/01–12/31/01
Italy: Certain Cut-to-Length Carbon-Quality Steel Plate, A–475–827	1/1/01–12/31/01
Republic of Korea: Certain Cut-to-Length Carbon-Quality Steel Plate, C–580–837	1/1/01–12/31/01
Suspension Agreements	
None	

In accordance with section 351.213(b) of the regulations, an interested party as defined by section 771(9) of the Act, may request in writing that the Secretary conduct an administrative review. For both antidumping and countervailing duty reviews, the interested party must specify the individual producers or exporters covered by an antidumping finding or an antidumping or countervailing duty order or suspension agreement for which it is requesting a review, and the requesting party must state why it desires the Secretary to review those particular producers or exporters. If the interested party intends for the Secretary to review sales of merchandise by an exporter (or a producer if that producer also exports merchandise from other suppliers) which were produced in more than one country of origin and each country of origin is subject to a separate order, then the interested party must state specifically, on an order-by-order basis, which exporter(s) the request is intended to cover.

Six copies of the request should be submitted to the Assistant Secretary for Import Administration, International Trade Administration, Room 1870, U.S. Department of Commerce, 14th Street & Constitution Avenue, NW., Washington, DC 20230. The Department also asks parties to serve a copy of their requests to the Office of Antidumping/Countervailing Enforcement, Attention: Sheila Forbes, in room 3065 of the main

Commerce Building. Further, in accordance with section 351.303(f)(l)(i) of the regulations, a copy of each request must be served on every party on the Department's service list.

The Department will publish in the **Federal Register** a notice of ''Initiation of Administrative Review of Antidumping or Countervailing Duty Order, Finding, or Suspended Investigation'' for requests received by the last day of February 2002. If the Department does not receive, by the last day of February 2002, a request for review of entries covered by an order, finding, or suspended investigation listed in this notice and for the period identified above, the Department will instruct the Customs Service to assess antidumping or countervailing duties on those entries at a rate equal to the cash deposit of (or bond for) estimated antidumping or countervailing duties required on those entries at the time of entry, or withdrawal from warehouse, for consumption and to continue to collect the cash deposit previously ordered.

This notice is not required by statute but is published as a service to the international trading community.

Dated: January 24, 2002.

Holly A. Kuga,

Senior Office Director, Group II, Office 4, Import Administration.

[FR Doc. 02–2525 Filed 1–31–02; 8:45 am]

BILLING CODE 3510–DS–P

DEPARTMENT OF COMMERCE

National Oceanic and Atmospheric Administration

[I.D. 012802A]

Mid-Atlantic Fishery Management Council; Public Meeting

AGENCY: National Marine Fisheries Service (NMFS), National Oceanic and Atmospheric Administration (NOAA), Commerce.

ACTION: Notice of public meeting.

SUMMARY: The Mid-Atlantic Fishery Management Council's (MAFMC) Demersal Species Committee and the Atlantic States Marine Fisheries Commission's (ASMFC) Summer Flounder, Scup, and Black Sea Bass Board will hold a public meeting.

DATES: The meeting will be held on Thursday, February 21, 2002, from 4 pm to 6 p.m.

ADDRESSES: This meeting will be held at the Swiss Hotel Washington, The Watergate, 2650 Virginia Avenue, NW, Washington, DC; telephone: 202–965–2300.

Council address: Mid-Atlantic Fishery Management Council, Room 2115, 300 S. New Street, Dover, DE 19904.

FOR FURTHER INFORMATION CONTACT: Daniel T. Furlong, Executive Director, Mid-Atlantic Fishery Management Council; telephone: 302–674–2331, ext. 19.

SUPPLEMENTARY INFORMATION: The purpose of this meeting is to discuss demersal species priorities for 2002 and beyond.

Although non-emergency issues not contained in this agenda may come before this group for discussion, those issues may not be the subject of formal action during this meeting. Action will be restricted to those issues specifically identified in this notice and any issues arising after publication of this notice that require emergency action under section 305(c) of the Magnuson-Stevens Fishery Conservation and Management Act, provided the public has been notified of the Council's intent to take final action to address the emergency.

Special Accommodations

This meeting is physically accessible to people with disabilities. Requests for sign language interpretation or other auxiliary aids should be directed to Joanna Davis at the Mid-Atlantic Council Office (see **ADDRESSES**) at least 5 days prior to the meeting date.

Dated: January 28, 2002.

Richard W. Surdi,

Acting Director, Office of Sustainable Fisheries, National Marine Fisheries Service.

[FR Doc. 02–2530 Filed 1–31–02; 8:45 am]

BILLING CODE 3510–22–S

DEPARTMENT OF COMMERCE

National Oceanic and Atmospheric Administration

[I.D. 012402E]

Pacific Fishery Management Council; Public Meeting

AGENCY: National Marine Fisheries Service (NMFS), National Oceanic and Atmospheric Administration (NOAA), Commerce.

ACTION: Notice of public meeting.

SUMMARY: The Groundfish Stock Assessment Review (STAR) Panel for Pacific whiting will hold a work session which is open to the public.

DATES: The Pacific whiting Stock Assessment Review Panel will meet beginning at 1 p.m., February 20, 2002. The meeting will continue on February 21, 2002 beginning at 8 a.m. through February 22, 2002. The meetings will end at 5 p.m. each day, or as necessary to complete business.

ADDRESSES: The Pacific whiting Stock Assessment Review Panel meeting will be held at NMFS Northwest Fisheries Science Center, 2725 Montlake Blvd. E, Seattle, WA 98112; 206–860–3200. The meeting will convene in room 438E on February 20, 2002 and in room 370W on February 21 and 22, 2002.

Council address: Pacific Fishery Management Council, 7700 NE Ambassador Place, Suite 200, Portland, OR 97220–1384.

FOR FURTHER INFORMATION CONTACT: Mr. Chuck Tracy, Staff Officer; 503–326–6352.

SUPPLEMENTARY INFORMATION: The purpose of the meeting is to review draft stock assessment documents and any other pertinent information, work with the Stock Assessment Team to make necessary revisions, and produce a STAR Panel report for use by the Council family and other interested persons.

Entry to the Northwest Fisheries Science Center requires identification with photograph (such as a student ID, state drivers license, etc.) A security guard will review the identification and issue a Visitor's Badge valid only for the date of the meeting.

Special Accommodations

The meeting is physically accessible to people with disabilities. Requests for sign language interpretation or other auxiliary aids should be directed to Ms. Carolyn Porter at 503-326-6352 at least 5 days prior to the meeting date.

Although nonemergency issues not contained in STAR Panel agendas may come before the STAR Panel for discussion, those issues may not be the subject of formal Panel action during this meeting. STAR Panel action will be restricted to those issues specifically listed in this notice, and any issues arising after publication of this notice that require emergency action under section 305 (c) of the Magnuson-Stevens Fishery Conservation and Management Act, provided the public has been notified of the Panel's intent to take final action to address the emergency.

Dated: January 28, 2002.

Richard W. Surdi,

Acting Director, Office of Sustainable Fisheries, National Marine Fisheries Service.

[FR Doc. 02–2529 Filed 1–31–02; 8:45 am]

BILLING CODE 3510–22–S

DEPARTMENT OF DEFENSE

Office of the Secretary

Continuing Collection; Comment Request

AGENCY: Office of the Assistant Secretary of Defense (Health Affairs), DoD.

ACTION: Notice.

SUMMARY: In compliance with section 3506(c)(2)(A) of the Paperwork Reduction Act of 1995, the Office of the Assistant Secretary of Defense (Health Affairs) announces the extension of a currently approved collection and seeks public comment on the provisions thereof. Comments are invited on: (a) Whether the proposed collection of information is necessary for the proper performance of the functions of the agency, including whether the information shall have practical utility; (b) the accuracy of the agency's estimate of the burden of the proposed information collection; (c) ways to enhance the quality, utility, and clarity of the information to be collected; and (d) ways to minimize the burden of the information collection on respondents, including the use of automated collection techniques or other forms of information technology.

DATES: Comments and recommendations should be received on or before April 2, 2002.

ADDRESSES: Written comments and recommendations on the continuing information collection should be sent to the TRICARE Management Activity, Special Contracts & Operations Office, Attn: Terri Katsouranis, 16401 East Centretech Parkway, Aurora, CO 80011–9043.

FOR FURTHER INFORMATION CONTACT: To request more information on the continuation of this information collection, please write to the above address or contact Terri Katsouranis by calling (303) 676–3444 or email at terri.katsouranis@tma.osd.mil.

Title, Associated Form and OMB Number: Continued Health Care Benefit Program (CHCBP) Application Form DD 2837; OMB Number 0704–0364.

Needs and Uses: The continuing information collection requirement is necessary for individuals to apply for enrollment in the Continued Health Care Benefit Program (CHCBP). The CHCBP is a program of temporary health care benefit coverage that is made available to eligible individuals who lose health care under the Military Health System.

Affected Public: Individuals.

Annual Burden Hours: 202.

Number of Respondents: 808.

Responses Per Respondent: 1.

Average Burden Per Response: 15 minutes.

Frequency: On Occasion.

SUPPLEMENTARY INFORMATION:

Summary of Information Collection

Respondents are individuals who are or were beneficiaries of the Military Health System (MHS) and who desire to enroll in the CHCBP following their loss of entitlement to health care coverage in the MHS. These beneficiaries include the active duty service member or former service member (who for purposes of this notice shall be referred to as ''service member''), an unmarried child of a service member who cease to meet the requirements for being considered a dependent, and a child placed for adoption or legal custody with the service member.

In order to be eligible for health care coverage under CHCBP, an individual must first enroll in CHCBP. DD Form 2837 is used as the information collection vehicle for that enrollment. The CHCBP is a legislatively mandated program and it is anticipated the program will continue indefinitely. As such, the need for collecting information that will allow an individual to enroll in CHCBP continues and the Department of Defense is thus publishing this formal notice.

Dated: January 25, 2002.

Patricia L. Toppings,

Alternate OSD Federal Register Liaison Officer, Department of Defense.

[FR Doc. 02–2471 Filed 1–31–02; 8:45 am]

BILLING CODE 5001–08–M

DEPARTMENT OF DEFENSE

Office of the Secretary

Proposed Collection; Comment Request

AGENCY: Defense Logistics Agency, Office of Small and Disadvantaged Business Utilization, DoD.

ACTION: Notice.

SUMMARY: In compliance with section 3506(c)(2)(A) of the Paperwork Reduction Act of 1995, the Defense Logistics Agency announces a proposed public information collection and seeks public comment on the provisions thereof. Comments are invited on: (a) Whether the proposed collection of information is necessary for the proper performance of the functions of the agency, including whether the information shall have practical utility; (b) the accuracy of the agency's estimate of the burden of the proposed information collection; (c) ways to enhance the quality, utility, and clarity of the information to be collected; and (d) ways to minimize the burden of the information collection on respondents, including through the use of automated collection techniques or other forms of information technology.

DATES: Consideration will be given to all comments received by April 2, 2002.

ADDRESSES: Written comments and recommendations on the proposed information collection should be sent to Director, Defense Logistics Agency, ATTN: Diana Maykowskyj, DB, 8725 John J. Kingman Road, Suite 1127, Fort Belvoir, VA 22060–6221.

FOR FURTHER INFORMATION CONTACT: To request more information on this proposed information collection or to obtain a copy of the proposal and associated collection instruments, please write to the above address, or call Ms. Diana Maykowskyj at (703) 767–1656.

Title; Associated Form; and OMB Number: Request for approval for Procurement Technical Assistance Center Cooperative Agreement Performance Report, DLA Form 1806, OMB Control Number 0704–0320.

Needs and Uses: The Defense Logistics Agency uses the report as the principal instrument for measuring the performance of Cooperative Agreements awards made under 10 U.S.C. Chapter 142.

Affected Public: State and local governments, private nonprofit organizations, Indian tribal organizations and Indian economic enterprises.

Annual Burden Hours: 1246.

Number of Respondents: 89.

Responses Per Respondent: 2.

Average Burden Per Response: 7 hours.

Frequency: Semiannually.

SUPPLEMENTARY INFORMATION:

Summary of Information Collection

Each cooperative agreement award recipient submitted goals and objectives in their application that were subsequently incorporated into their cooperative agreement awards. The level of achievement of these goals and the funds expended in the process of conducting the program is measured by the report. The government's continued funding of a cooperative agreement and the decision to exercise an option award for a cooperative agreement award is based to a significant degree on the award holder's current performance as measured by the report. Information from the report is also used to identify

programs that may be in need of assistance and/or increased surveillance.

Dated: January 25, 2002.

Patricia L. Toppings,

Alternate OSD Federal Register Liaison Officer, Department of Defense.

[FR Doc. 02–2472 Filed 1–31–02; 8:45 am]

BILLING CODE 5001–08–M

DEPARTMENT OF DEFENSE

Office of the Secretary

Submission for OMB review; comment request

ACTION: Notice.

The Department of Defense has submitted to OMB for clearance, the following proposal for collection of information under the provisions of the Paperwork Reduction Act (44 U.S.C. chapter 35).

DATES: Consideration will be given to all comments received by March 4, 2002.

Title, Form, and OMB Number: TRICARE Plus Enrollment and Disenrollment Applications; DD Form X437 and X438; OMB Number 0720–[To Be Determined].

Type Of Request: New Collection.

Number of Respondents: 20,689.

Responses Per Respondent: 1.

Annual Responses: 20,689.

Average Burden Per Response: 7 minutes.

Annual Burden Hours: 2,150.

Needs And Uses: These collection instruments serve as an application for enrollment and disenrollment in the Department of Defense's TRICARE Plus Health Plan established in accordance with Title 10 U.S.C. sections 1099 (which calls for a healthcare enrollment system) and 1086 (which authorizes TRICARE eligibility of Medicare Eligible Persons and has resulted in the development of a new enrollment option called TRICARE Plus). The information collected provides the TRICARE contractors with necessary data to determine beneficiary eligibility and to identify the selection of a health care option.

Affected Public: Individuals or Households.

Frequency: On Occasion.

Respondent's Obligation: Required To Obtain or Retain Benefits.

OMB Desk Officer: Ms. Cristal A. Thomas.

Written comments and recommendations on the proposed information collection should be sent to Ms. Thomas at the Office of Management and Budget, Desk Officer for DoD Health Affairs, Room 10235, New Executive Office Building, Washington, DC 20503.

DOD Clearance Officer: Mr. Robert Cushing.

Written requests for copies of the information collection proposal should be sent to Mr. Cushing, WHS/DIOR, 1215 Jefferson Davis Highway, Suite 1204, Arlington, VA 22202–4302.

Dated: January 25, 2002.

Patricia L. Toppings,

Alternate OSD Federal Register Liaison Officer, Department of Defense.

[FR Doc. 02–2469 Filed 1–31–02; 8:45 am]

BILLING CODE 5001–08–M

DEPARTMENT OF DEFENSE

Office of the Secretary

Submission for OMB Review; Comment Request

ACTION: Notice.

The Department of Defense has submitted to OMB for clearance, the following proposal for collection of information under the provisions of the Paperwork Reduction Act (44 U.S.C. Chapter 35).

DATES: Consideration will be given to all comments received by March 4, 2002.

Title, Form, and OMB Number: Department of Defense Dependents Schools (DoDDS) Overseas Employment Opportunities for Education; DS Form(s) 5010, 5011, 5012, 5013; OMB Number 0704–0370.

Type of Request: Reinstatement.

Number of Respondents: 25,120.

Responses Per Respondent: 1.

Annual Responses: 25,120.

Average Burden Per Response: 10minutes.

Annual Burden Hours: 4,127.

Needs and Uses: This information collection is necessary to obtain information on prospective applicants for educator positions within the Department of Defense Dependents Schools. The information is used to verify employment history of educator applicants and to determine creditable previous experience for pay-setting purposes on candidates selected for positions. In addition, the information is used to ensure that those individuals selected for employment with the Department of Defense Schools possess the abilities and personal traits that give promise of outstanding success under the unusual circumstances they will find working abroad. Information gathered is used to ensure that the Department of Defense Dependents Schools personnel practices meet the requirements of Federal law.

Affected Public: Individuals or households; business or other for-profit institutions; State, Local or Tribal Government.

Frequency: On occasion.

Respondent's Obligation: Required to obtain or retain benefits.

OMB Desk Officer: Ms. Jackie Zeiher.

Written comments and recommendations on the proposed information collection should be sent to Ms. Zeiher at the Office of Management and Budget, Desk Officer for DoD, Room 10236, New Executive Office Building, Washington, DC 20503.

DOD Clearance Officer: Mr. Robert Cushing.

Written requests for copies of the information collection proposal should be sent to Mr. Cushing, WHS/DIOR, 1215 Jefferson Davis Highway, Suite 1204, Arlington, VA 22202–4302.

Dated: January 25, 2002.

Patricia L. Toppings,

Alternate OSD Federal Register Liaison Officer, Department of Defense.

[FR Doc. 02–2470 Filed 1–31–02; 8:45 am]

BILLING CODE 5001–08–M

DEPARTMENT OF EDUCATION

[CFDA Nos.: 84.141A and 84.149A]

Notice Inviting Applications for New Awards for Fiscal Year 2002 for the High School Equivalency Program and the College Assistance Migrant Program

AGENCY: Department of Education.

ACTION: Notice inviting applications for new awards for fiscal year (FY) 2002 for the High School Equivalency Program (HEP) and the College Assistance Migrant Program (CAMP).

Purpose of Programs: The purpose of HEP and CAMP is to provide grants to institutions of higher education (IHEs), or to private non-profit agencies working in cooperation with IHEs, to help migrant and seasonal farmworkers complete high school and succeed in postsecondary education.

Eligible Applicants: IHEs or private non-profit agencies working in cooperation with IHEs.

Applications Available: February 1, 2002.

Deadline for Transmittal of Applications: March 18, 2002.

Deadline for Intergovernmental Review: May 17, 2002.

Available Funds: HEP $3,000,000.

Estimated Range of Awards: HEP $150,000–$375,000.

Estimated Average Size of Awards: HEP $340,000.

Estimated Number of Awards: HEP 9.

Available Funds: CAMP $5,000,000.

Estimated Range of Awards: CAMP $150,000–$375,000.

Estimated Average Size of Awards: CAMP $340,000.

Estimated Number of Awards: CAMP 15.

Note: The Department is not bound by any estimates in this notice.

Project Period: Up to 60 months.

SUPPLEMENTARY INFORMATION: HEP assists migrant and seasonal farmworkers to obtain a general education diploma (GED) and to be placed in postsecondary education or training, career positions, or the military. By locating the programs at IHEs, migrant and seasonal farmworkers also have opportunities to attend cultural events, academic programs, and other educational and cultural activities usually not available to them. CAMP assists migrant and seasonal farmworkers to successfully complete the first academic year of study in a college or university, and provides follow-up services to help students continue in postsecondary education.

The selection criteria used to review applications are included in the application package. The Congress has appropriated a total of $23,000,000 for HEP and $15,000,000 for CAMP for FY 2002. Increases in the FY 2002 appropriations ($3,000,000 for HEP and $5,000,000 for CAMP) will be used to fund new applications.

Applicable Regulations: (a) The Education Department General Administrative Regulations (EDGAR) in 34 CFR parts 74, 75, 77, 79, 82, 85, 86, 97, 98, and 99; (b) 34 CFR part 206, and the definitions of a migrant and seasonal farmworker in 34 CFR 200.40 and 20 CFR part 652, respectively.

FOR FURTHER INFORMATION CONTACT: To obtain a copy of the application or to obtain information on the program, call or write Mary L. Suazo, U.S. Department of Education, Office of Elementary and Secondary Education, Office of Migrant Education, 400 Maryland Avenue, SW., Room 3E227, FOB 6, Washington, DC 20202–6135. Telephone Number: (202) 260–1396. Inquiries may be sent by e-mail to *mary.suazo@ed.gov* or by FAX at (202) 205–0089. A copy of the application can be obtained electronically at: *http://www.ed.gov/GrantApps*.

If you use a telecommunications device for the deaf (TDD) you may call the Federal Information Relay Service (FIRS) at 1–800–877–8339. Individuals with disabilities may obtain this document in an alternative format (e.g., Braille, large print, audiotape, or computer diskette) on request to the contact person listed in the preceding paragraph.

Electronic Access to This Document

You may view this document, as well as all other Department of Education documents published in the **Federal Register**, in text or Adobe Portable Document Format (PDF) on the Internet at the following site: *www.ed.gov/legislation/FedRegister*.

To use PDF you must have Adobe Acrobat Reader, which is available free at this site. If you have questions about using PDF, call the U.S. Government Printing Office toll free at 1–888–293–6498; or in the Washington, DC area at (202) 512–1530.

Note: The official version of this document is the document published in the **Federal Register**. Free Internet access to the official edition of the **Federal Register** and the Code of Federal Regulations is available on GPO Access at: *http://www.access.gpo.gov/nara/index.html*.

Program Authority: 20 U.S.C. 1070d–2.

Dated: January 28, 2002.

Susan B. Neuman,

Assistant Secretary for Elementary and Secondary Education.

[FR Doc. 02–2485 Filed 1–31–02; 8:45 am]

BILLING CODE 4000–01–U

DEPARTMENT OF EDUCATION

Recognition of Accrediting Agencies, State Agencies for the Approval of Public Postsecondary Vocational Education, and State Agencies for the Approval of Nurse Education

AGENCY: National Advisory Committee on Institutional Quality and Integrity, Department of Education (The Advisory Committee).

What Is the Purpose of This Notice?

The purpose of this notice is to invite written comments on accrediting agencies and State approval agencies whose applications to the Secretary for initial or renewed recognition or whose interim reports will be reviewed at the Advisory Committee meeting to be held on June 3–5, 2002.

Where Should I Submit my Comments?

Please submit your written comments by March 18, 2002, to Carol Griffiths, Chief, Accrediting Agency Evaluation, Accreditation and State Liaison. You may contact her at the U.S. Department of Education, room 7105, MS 8509, 1990 K Street, NW, Washington, DC 20006, telephone: (202) 219–7011. Individuals who use a telecommunications device for the deaf (TDD) may call the Federal Information Relay Service at 1–800–877–8339.

What Is the Authority for the Advisory Committee?

The National Advisory Committee on Institutional Quality and Integrity is established under section 114 of the Higher Education Act (HEA), as amended, 20 U.S.C. 1011c. One of the purposes of the Advisory Committee is to advise the Secretary of Education on the recognition of accrediting agencies and State approval agencies.

Will This Be My Only Opportunity To Submit Written Comments?

Yes, this notice announces the only opportunity you will have to submit written comments. However, a subsequent **Federal Register** notice will announce the meeting and invite individuals and/or groups to submit requests to make oral presentations before the Advisory Committee on the agencies that the Committee will review. That notice, however, does not offer a second opportunity to submit written comment.

What Happens to the Comments That I Submit?

We will review your comments, in response to this notice, as part of our evaluation of the agencies' compliance with the Secretary's Criteria for Recognition of Accrediting Agencies and State Approval Agencies. The Criteria are regulations found in 34 CFR part 602 (for accrediting agencies) and in 34 CFR part 603 (for State approval agencies).

We will also include your comments with the staff analyses we present to the Advisory Committee at its June 2002 meeting. Therefore, in order for us to give full consideration to your comments, it is important that we receive them by March 18, 2002. In all instances, your comments about agencies seeking initial or continued recognition must relate to the Criteria for Recognition. In addition, your comments for any agency whose interim report is scheduled for review must relate to the issues raised and the Criteria for Recognition cited in the Secretary's letter that requested the interim report.

What Happens to Comments Received After the Deadline?

We will review any comments received after the deadline. If such comments, upon investigation, reveal that the accrediting agency is not acting in accordance with the Criteria for Recognition, we will take action either

before or after the meeting, as appropriate.

What Agencies Will the Advisory Committee Review at the Meeting?

The Secretary of Education recognizes accrediting agencies and State approval agencies for public postsecondary vocational education and nurse education if the Secretary determines that they meet the Criteria for Recognition. Recognition means that the Secretary considers the agency to be a reliable authority as to the quality of education offered by institutions or programs that are encompassed within the scope of recognition he grants to the agency. The following agencies will be reviewed during the June 2002 meeting of the Advisory Committee:

Nationally Recognized Accrediting Agencies

Petition for Initial Recognition

1. Teacher Education Accreditation Council (Requested scope of recognition: The accreditation of professional education programs in institutions offering baccalaureate and graduate degrees for the preparation of teachers K–12.)

Petitions for Renewal of Recognition

1. American Association of Nurse Anesthetists, Council on Accreditation of Nurse Anesthesia Educational Programs (Current scope of recognition: The accreditation of institutions and programs of nurse anesthesia at the certificate, master's, or doctoral degree levels.)
2. Association of Advanced Rabbinical and Talmudic Schools, Accreditation Commission (Current scope of recognition: The accreditation and preaccreditation (''Correspondent'' and ''Candidate'') of advanced rabbinical and Talmudic schools.)
3. American Board of Funeral Service Education, Committee on Accreditation (Current scope of recognition: The accreditation of institutions and programs awarding diplomas, associate degrees and bachelor's degrees in funeral service or mortuary science.)
4. Accrediting Commission on Education for Health Services Administration (Current scope of recognition: The accreditation throughout the United States of graduate programs in health services administration.)
5. The American Dietetic Association, Commission on Accreditation for Dietetics Education (Current scope of recognition: The accreditation of Coordinated Programs in Dietetics at both the undergraduate and graduate level, postbaccalaureate Dietetic Internships, and Dietetic Technician Programs at the associate degree level.) (Requested expansion of scope of recognition: The current scope of recognition to include the accreditation of Didactic Programs in Dietetics at both the undergraduate and graduate level, and its accreditation of programs offered via distance education.)
6. Council on Education for Public Health (Current scope of recognition: The accreditation and preaccreditation (''Preaccreditation Status'') of graduate schools of public health, graduate programs in community health education outside schools of public health, and graduate programs in community health/preventive medicine outside schools of public health.)
7. Liaison Committee on Medical Education (Current scope of recognition: The accreditation of medical education programs leading to the M.D. degree.)
8. Middle States Association of Colleges and Schools, Commission on Higher Education (Current scope of recognition: The accreditation and preaccreditation (''Candidate Status'') of institutions in Delaware, the District of Columbia, Maryland, New Jersey, New York, Pennsylvania, Puerto Rico, the U.S. Virgin Islands, the Republic of Panama and a limited number of freestanding American-style institutions abroad that are chartered or licensed by an appropriate agency within the Middle States region.)
9. National Association of Nurse Practitioners in Women's Health, Council on Accreditation (Current scope of recognition: The accreditation of women's health nurse practitioner programs located within the United States and its territories.)
10. New York Board of Regents (Current scope of recognition: The accreditation (registration) of collegiate degree-granting programs or curricula offered by institutions of higher education in the State of New York and of credit-bearing certificate and diploma programs offered by degree-granting institutions of higher education in the State of New York.)

Interim Reports

(An interim report is a follow-up report on an accrediting agency's compliance with specific criteria for recognition that was requested by the Secretary when the Secretary granted renewed recognition to the agency.)

1. Accreditation Commission for Acupuncture and Oriental Medicine.
2. American Association for Marriage and Family Therapy, Commission on Accreditation for Marriage and Family Therapy Education.
3. American Bar Association, Council of the Section of Legal Education and Admissions to the Bar.
4. American Osteopathic Association, Bureau of Professional Education.
5. American Podiatric Medical Association, Council on Podiatric Medical Education.
6. Council on Occupational Education.
7. Midwifery Education Accreditation Council.
8. National Council for Accreditation of Teacher Education.
9. North Central Association of Colleges and Schools, Executive Board of the Commission on Schools.

State Agencies Recognized for the Approval of Public Postsecondary Vocational Education

Petition for Renewal of Recognition

1. New York State Board of Regents (Public Postsecondary Vocational Education)

Interim Report

1. Oklahoma State Regents for Higher Education

State Agencies Recognized for the Approval of Nurse Education

Petition for Initial Recognition

1. North Dakota Board of Nursing

Petition for Renewal of Recognition

1. New York State Board of Regents (Nursing Education)

Where Can I Inspect Petitions and Third-Party Comments Before and After the Meeting?

All petitions and those third-party comments received in advance of the meeting, will be available for public inspection and copying at the U.S. Department of Education, room 7105, MS 8509, 1990 K Street, NW, Washington, DC 20006, telephone (202) 219–7011 between the hours of 8 a.m. and 3 p.m., Monday through Friday, until May 13, 2002. They will be available again after the June 3–5 Advisory Committee meeting. An appointment must be made in advance of such inspection or copying.

How May I Obtain Electronic Access to This Document?

You may view this document, as well as all other Department of Education documents published in the **Federal Register**, in text or Adobe Portable Document Format (PDF) on the Internet at the following site: *http://www.ed.gov/legislation/FedRegister.*

To use PDF you must have Adobe Acrobat Reader, which is available free

at this site. If you have questions about using PDF, call the U.S. Government Printing Office (GPO), toll free, at 1–888–293–6498; or in the Washington, DC, area at (202) 512–1530.

Note: The official version of this document is the document published in the **Federal Register**. Free Internet access to the official edition of the **Federal Register** and the Code of Federal Regulations is available on GPO Access at: *http://www.access.gpo.gov/nara/index.html.*

Authority: 5 U.S.C. Appendix 2.

Dated: January 24, 2002.

Kenneth W. Tolo,

Acting Deputy Assistant Secretary for Policy, Planning, and Innovation, Office of Postsecondary Education.

[FR Doc. 02–2440 Filed 1–31–02; 8:45 am]

BILLING CODE 4000–01–P

DEPARTMENT OF ENERGY

Research and Development for Locomotive Emissions Reduction and Efficiency Improvements

AGENCY: Albuquerque Operations Office, Department of Energy.

ACTION: Notice of availability of solicitation.

SUMMARY: The U. S. Department of Energy (DOE), Albuquerque Operations Office (AL), is seeking applications for energy efficiency improvements and emissions reduction. Through this solicitation, DOE seeks to improve the energy efficiency and emissions performance of locomotives through the use of advanced diesel engines, emission control technologies, and systems improvements. This solicitation primarily addresses technologies to meet locomotive EPA Tier 2 emissions requirements while providing technologies to improve overall energy efficiency. A DOE technical panel will perform a scientific and engineering evaluation of each responsive application to determine the merit of the approach. DOE anticipates issuing one or more financial assistance instruments from this solicitation. Funding in the amount of $2,500,000 and $5,000,000 over a four-year period is anticipated to be available. Cost sharing of 50% by the applicant is required.

DATES: Applications are to be received no later than 3:00 p.m. local prevailing time on March 29, 2002. Any application received after the due date will not be evaluated.

FOR FURTHER INFORMATION CONTACT: Erwin E. Fragua, Contract Specialist, DOE/AL, at (505) 845–6442 or by e-mail at *efragua@doeal.gov.*

SUPPLEMENTARY INFORMATION: The solicitation will be available on the internet on or about February 1, 2002 at the following Web site: *http://e-center.doe.gov.* Applications must be prepared and submitted in accordance with the instructions and forms contained in the solicitation. For profit and not-for-profit organizations, state and local governments, Indian tribes, and institutions of higher learning are eligible for awards under this solicitation. Teaming arrangements are strongly encouraged especially among manufacturers of locomotives and of locomotive components to take advantage of the best complementary technologies available. It is the desire of the DOE that the primary applicant be a locomotive manufacturer.

Issued in Albuquerque, New Mexico, January 25, 2002.

Martha L. Youngblood,

Contracting Officer, Complex Support Branch, Office of Contracts and Procurement.

[FR Doc. 02–2484 Filed 1–31–02; 8:45 am]

BILLING CODE 6450–01–P

DEPARTMENT OF ENERGY

Federal Energy Regulatory Commission

[Docket No. RP99–301–041]

ANR Pipeline Company; Notice of Compliance Filing

January 28, 2002.

Take notice that on January 22, 2002, ANR Pipeline Company (ANR) filed a service agreement with CoEnergy Trading Company in compliance with the Commission's Order on Rehearing dated November 21, 2001. *ANR Pipeline Company,* 97 FERC ¶ 61,222 (2001).

Any person desiring to protest said filing should file a protest with the Federal Energy Regulatory Commission, 888 First Street, NE., Washington, DC 20426, in accordance with section 385.211 of the Commission's rules and regulations. All such protests must be filed in accordance with section 154.210 of the Commission's regulations. Protests will be considered by the Commission in determining the appropriate action to be taken, but will not serve to make protestants parties to the proceedings. Copies of this filing are on file with the Commission and are available for public inspection. This filing may also be viewed on the Web at *http://www.ferc.gov* using the ''RIMS'' link, select ''Docket#'' and follow the instructions (call 202–208–2222 for assistance). Comments, protests and interventions may be filed electronically via the Internet in lieu of paper. See, 18 CFR 385.2001(a)(1)(iii) and the instructions on the Commission's Web site under the ''e-Filing'' link.

C. B. Spencer,

Acting Secretary.

[FR Doc. 02–2477 Filed 1–31–02; 8:45 am]

BILLING CODE 6717–01–P

DEPARTMENT OF ENERGY

Federal Energy Regulatory Commission

[Docket No. RP02–147–000]

ANR Pipeline Company; Notice of Proposed Changes in FERC Gas Tariff

January 28, 2002.

Take notice that on January 18, 2002, ANR Pipeline Company tendered for filing as part of its FERC Gas Tariff, Second Revised Volume No. 1, Fourth Revised Sheet No. 150, with an effective date of March 1, 2002.

ANR states that the above-referenced tariff sheet is being filed to add a bilateral Limitation of Liability provision to the Miscellaneous section of the General Terms and Conditions of ANR's FERC Gas Tariff.

ANR states that copies of the filing has been mailed to each of ANR's customers and affected state regulatory commissions.

Any person desiring to be heard or to protest said filing should file a motion to intervene or a protest with the Federal Energy Regulatory Commission, 888 First Street, NE., Washington, DC 20426, in accordance with sections 385.214 or 385.211 of the Commission's rules and regulations. All such motions or protests must be filed in accordance with section 154.210 of the Commission's regulations. Protests will be considered by the Commission in determining the appropriate action to be taken, but will not serve to make protestants parties to the proceedings. Any person wishing to become a party must file a motion to intervene. Copies of this filing are on file with the Commission and are available for public inspection. This filing may also be viewed on the Web at *http://www.ferc.gov* using the ''RIMS'' link, select ''Docket#'' and follow the instructions (call 202–208–2222 for assistance). Comments, protests and interventions may be filed electronically via the Internet in lieu of paper. See, 18 CFR 385.2001(a)(1)(iii) and the

instructions on the Commission's Web site under the ''e-Filing'' link.

C. B. Spencer,

Acting Secretary.

[FR Doc. 02–2480 Filed 1–31–02; 8:45 am]

BILLING CODE 6717–01–P

DEPARTMENT OF ENERGY

Federal Energy Regulatory Commission

[Docket No. RP96–389–042]

Columbia Gulf Transmission Company; Notice of Negotiated Rate

January 28, 2002.

Take notice that on January 18, 2002, Columbia Gulf Transmission Company (Columbia Gulf) tendered for re-filing the following contract for disclosure of a negotiated rate transaction:

FTS–1 Service Agreement No. 71725 between Columbia Gulf Transmission Company and Entergy Mississippi, Inc., dated January 10, 2002

Columbia Gulf states that it is filing the service agreement to comply with the Commission's order issued December 21, 2001 in this docket.

Columbia Gulf states further that it has served copies of the filing on all parties identified on the official service list in Docket No. RP96–389.

Any person desiring to be heard or to protest said filing should file a motion to intervene or a protest with the Federal Energy Regulatory Commission, 888 First Street, NE., Washington, DC 20426, in accordance with sections 385.214 or 385.211 of the Commission's rules and regulations. All such motions or protests must be filed in accordance with section 154.210 of the Commission's regulations. Protests will be considered by the Commission in determining the appropriate action to be taken, but will not serve to make protestants parties to the proceedings. Any person wishing to become a party must file a motion to intervene. Copies of this filing are on file with the Commission and are available for public inspection. This filing may also be viewed on the Web at *http://www.ferc.gov* using the ''RIMS'' link, select ''Docket#'' and follow the instructions (call 202–208–2222 for assistance). Comments, protests and interventions may be filed electronically via the Internet in lieu of paper. See, 18 CFR 385.2001(a)(1)(iii) and the instructions on the Commission's Web site under the ''e-Filing'' link.

C. B. Spencer,

Acting Secretary.

[FR Doc. 02–2475 Filed 1–31–02; 8:45 am]

BILLING CODE 6717–01–P

DEPARTMENT OF ENERGY

Federal Energy Regulatory Commission

[Docket No. CP02–68–000]

Enbridge Pipelines (Midla) Inc.; Notice of Application

January 28, 2002.

Take notice that on January 15, 2002, Enbridge Pipelines (Midla) Inc. (Midla), 1100 Louisiana, Suite 3300, Houston, Texas 77002, filed in Docket No. CP02–68–000 a request pursuant to section 7(b) of the Natural Gas Act (NGA), for permission and approval to abandon by transfer to Mid Louisiana Gas Transmission Company (MTrans), its affiliated Louisiana Hinshaw Pipeline, certain transmission and related pipeline facilities located in the parishes of East Feliciana, West Feliciana, West Baton Rouge and East Baton Rouge, Louisiana, all as more fully set forth in the application which is on file with the Commission and open to public inspection. This filing may be viewed on the Web at *http://www.ferc.gov* using the ''RIMS'' link, select ''Docket #'' and follow the instructions (call (202) 208–2222 for assistance).

Midla requests abandonment authorization to transfer to MTrans the portion of its system extending from Milepost 135.08 in East Feliciana Parish, Louisiana to Milepost 171.53 in East Baton Rouge Parish, Louisiana, and related looping and transmission lateral lines in southeast Louisiana. Midla states that the facilities for which it seeks abandonment authority consist of approximately 77.81 miles of pipeline, ranging from six to 22 inches in diameter. Midla also requests that the Commission make a finding that the subject facilities will become nonjurisdictional once transferred to MTrans.

Midla states that the subject facilities are no longer required by the public convenience and necessity, and that the proposed abandonment and transfer to MTrans is in the public interest. Midla further states that the cost of operation and maintenance of the subject facilities can no longer be economically justified as part of Midla's system. Midla states that MTrans' integration of these facilities into its core intrastate business will allow for their efficient use and also provide significant competitive benefits in the area.

Midla states that upon approval of the proposed abandonment, the subject facilities will be transferred to MTrans at net book value, estimated to be $4,389,957, and that MTrans will operate the facilities as an integrated part of its intrastate system. Midla further states that it is not proposing to change its rates and has no current plans to file a rate case. Midla adds that the costs underlying any future rate case however, will be reduced as a result of the proposed abandonment.

Midla states that the proposed abandonment will result in no disruption of firm transportation service for Midla's customers whose primary receipt or delivery points are on the abandoned facilities. In addition, Midla states that the proposed abandonment will not affect Midla's ability to continue to provide natural gas transportation service for current customers whose receipt and delivery points remain on Midla's system after the proposed abandonment Midla states that it will have sufficient capacity on its remaining transmission facilities to render transportation services without detriment or disadvantage to these customers.

Any questions regarding this application should be directed to Claudia A. Schrull, Director of Regulatory Affairs, Enbridge Pipelines (Midla) Inc., 1100 Louisiana, Suite 3300, Houston, Texas 77002 at (713) 821–2045.

There are two ways to become involved in the Commission's review of this abandonment. First, any person wishing to obtain legal status by becoming a party to the proceedings for this abandonment should, on or before February 19, 2002, file with the Federal Energy Regulatory Commission, 888 First Street, NE., Washington, DC 20426, a motion to intervene in accordance with the requirements of the Commission's Rules of Practice and Procedure (18 CFR 385.214 or 385.211) and the Regulations under the NGA (18 CFR 157.10). A person obtaining party status will be placed on the service list maintained by the Secretary of the Commission and will receive copies of all documents filed by the applicant and by all other parties. A party must submit 14 copies of filings made with the Commission and must mail a copy to the applicant and to every other party in the proceeding. Only parties to the proceeding can ask for court review of Commission orders in the proceeding.

However, a person does not have to intervene in order to have comments considered. The second way to participate is by filing with the Secretary of the Commission, as soon as possible, an original and two copies of comments in support of or in opposition to this abandonment. The Commission will consider these comments in determining the appropriate action to be taken, but the filing of a comment alone will not serve to make the filer a party to the proceeding. The Commission's rules require that persons filing comments in opposition to the abandonment provide copies of their protests only to the party or parties directly involved in the protest.

Persons who wish to comment only on the environmental review of this abandonment should submit an original and two copies of their comments to the Secretary of the Commission. Environmental commenters will be placed on the Commission's environmental mailing list, will receive copies of the environmental documents, and will be notified of meetings associated with the Commission's environmental review process. Environmental commenters will not be required to serve copies of filed documents on all other parties. However, the non-party commenters will not receive copies of all documents filed by other parties or issued by the Commission (except for the mailing of environmental documents issued by the Commission) and will not have the right to seek court review of the Commission's final order.

Comments, protests and interventions may be filed electronically via the Internet in lieu of paper. *See,* 18 CFR 385.2001(a)(1)(iii) and the instructions on the Commission's web site under the ''e-Filing'' link

If the Commission decides to set the application for a formal hearing before an Administrative Law Judge, the Commission will issue another notice describing that process. At the end of the Commission's review process, a final Commission order approving or denying abandonment will be issued.

C. B. Spencer,

Acting Secretary.

[FR Doc. 02–2473 Filed 1–31–02; 8:45 am]

BILLING CODE 6717–01–P

DEPARTMENT OF ENERGY

Federal Energy Regulatory Commission

[Docket No. RP02–148–000]

Midwestern Gas Transmission Company; Notice of Proposed Changes in FERC Gas tariff

January 28, 2002.

Take notice that on January 18, 2002, Midwestern Gas Transmission Company (Midwestern) tendered for filing to become part of its FERC Gas Tariff, Third Revised Volume No. 1, the following tariff sheets to become effective March 1, 2002:

First Revised Sheet No. 236
First Revised Sheet No. 268
First Revised Sheet No. 269

Midwestern states that the purpose of this filing is to revise Subsections 6.2 and 25.2 of the General Terms and Conditions. Midwestern's currently effective tariff imposes interest charges on all late payments. Midwestern proposes to revise Subsection 6.2 to impose an interest charge for late payments on an invoice to the extent that the interest charge is $25 or more in a month. This proposed change will alleviate the administrative burden associated with interest charges on minor late payment amounts. Midwestern also proposes to revise Subsection 25.2 of the General Terms and Conditions, eliminating the prepayment requirement for all Shippers requesting firm service under Rate Schedule FT–A including released transportation service. Current industry practices do not require prepayments for shippers requesting new service.

Midwestern states that copies of this filing have been sent to all of Midwestern's shippers and interested state regulatory commissions.

Any person desiring to be heard or to protest said filing should file a motion to intervene or a protest with the Federal Energy Regulatory Commission, 888 First Street, NE., Washington, DC 20426, in accordance with sections 385.214 or 385.211 of the Commission's rules and regulations. All such motions or protests must be filed in accordance with section 154.210 of the Commission's regulations. Protests will be considered by the Commission in determining the appropriate action to be taken, but will not serve to make protestants parties to the proceedings. Any person wishing to become a party must file a motion to intervene. Copies of this filing are on file with the Commission and are available for public inspection. This filing may also be viewed on the web at *http://www.ferc.gov* using the ''RIMS'' link, select ''Docket#'' and follow the instructions (call 202–208–2222 for assistance). Comments, protests and interventions may be filed electronically via the Internet in lieu of paper. *See,* 18 CFR 385.2001(a)(1)(iii) and the instructions on the Commission's Web site under the ''e-Filing'' link.

C. B. Spencer,

Acting Secretary.

[FR Doc. 02–2481 Filed 1–31–02; 8:45 am]

BILLING CODE 6717–01–P

DEPARTMENT OF ENERGY

Federal Energy Regulatory Commission

[Docket No. RP02–149–000]

Reliant Energy Gas Transmission Company; Notice of Proposed Changes in FERC Gas Tariff

January 28, 2002.

Take notice that on January 23, 2002, Reliant Energy Gas Transmission Company (Reliant) tendered for filing as part of its FERC Gas Tariff, Fifth Revised Volume No. 1, the following tariff sheets, with an effective date of February 22, 2002:

Second Revised Sheet No. 454
First Revised Sheet No. 455

Reliant states that the purpose of the filing is to revise the tariff language regarding the date for Reliant's fuel percentages and Electric Power Costs (EPC) Tracker pursuant to Sections 27 and 28 of its General Terms and Conditions. Reliant seeks the ability to make the filings with FERC on or before the tariff mandated dates. The effective dates and base periods used for calculating the fuel percentages are to remain the same.

Any person desiring to be heard or to protest said filing should file a motion to intervene or a protest with the Federal Energy Regulatory Commission, 888 First Street, NE., Washington, DC 20426, in accordance with sections 385.214 or 385.211 of the Commission's rules and regulations. All such motions or protests must be filed in accordance with section 154.210 of the Commission's regulations. Protests will be considered by the Commission in determining the appropriate action to be taken, but will not serve to make protestants parties to the proceedings. Any person wishing to become a party must file a motion to intervene. Copies of this filing are on file with the Commission and are available for public inspection. This filing may also be

viewed on the Web at *http://www.ferc.gov* using the ''RIMS'' link, select ''Docket#'' and follow the instructions (call 202–208–2222 for assistance). Comments, protests and interventions may be filed electronically via the Internet in lieu of paper. *See,* 18 CFR 385.2001(a)(1)(iii) and the instructions on the Commission's Web site under the ''e-Filing'' link.

C.B. Spencer,

Acting Secretary.

[FR Doc. 02–2482 Filed 1–31–02; 8:45 am]

BILLING CODE 6717–01–P

DEPARTMENT OF ENERGY

Federal Energy Regulatory Commission

[Docket No. RP01–245–007]

Transcontinental Gas Pipe Line Corporation; Notice of Compliance Filing

January 28, 2002.

Take notice that on January 18, 2002 Transcontinental Gas Pipe Line Corporation (Transco) tendered for filing as part of its FERC Gas Tariff, Third Revised Volume No. 1, certain revised tariff sheets which are enumerated in Appendix A attached to the filing, to be effective December 1, 2001.

Transco states that the purpose of the limited Section 4 filing is to submit revised tariff sheets and supporting workpapers in compliance with Ordering Paragraph (B) of the Commission's Order on Rehearing issued December 19, 2001 in Docket No. RP01–245, et.al. The December 19th order directed Transco to file within 30 days its issuance revised tariff sheets to be effective December 1, 2001, containing rates which have been revised to reflect the removal of the cost of the North Padre Island facilities which were abandoned and transferred by Transco pursuant to the authorizations granted in Docket Nos. CP01–34–000, et.al. Specifically, the rates and workpapers reflect a decrease in the Operation and Maintenance Expenses, overall Cost of Service, and Rate Base; and changes in the gross and net plant allocation percentages and Dt-miles used in the calculation of the rates.

Transco states that included in Appendix B attached to the filing are the workpapers supporting the cost of the North Padre Island facilities being removed from Transco's rates. Appendix C contains workpapers supporting the Dt Miles used in the design and Appendix D contains workpapers supporting the overall cost allocation and rate design underlying the proposed rates.

Transco states that copies of the filing are being mailed to affected customers and interested State Commissions.

Any person desiring to protest said filing should file a protest with the Federal Energy Regulatory Commission, 888 First Street, NE., Washington, DC 20426, in accordance with section 385.211 of the Commission's rules and regulations. All such protests must be filed in accordance with section 154.210 of the Commission's Regulations. Protests will be considered by the Commission in determining the appropriate action to be taken, but will not serve to make protestants parties to the proceedings. Copies of this filing are on file with the Commission and are available for public inspection. This filing may also be viewed on the Web at *http://www.ferc.gov* using the ''RIMS'' link, select ''Docket#'' and follow the instructions (call 202–208–2222 for assistance). Comments, protests and interventions may be filed electronically via the Internet in lieu of paper. *See,* 18 CFR 385.2001(a)(1)(iii) and the instructions on the Commission's Web site under the ''e-Filing'' link.

C. B. Spencer,

Acting Secretary.

[FR Doc. 02–2478 Filed 1–31–02; 8:45 am]

BILLING CODE 6717–01–P

DEPARTMENT OF ENERGY

Federal Energy Regulatory Commission

[Docket Nos. CP02–70–000, CP02–71–000 and CP02–72–000]

Williams Field Services—Matagorda Offshore Company, LLC; Notice of Application

January 28, 2002.

Take notice that on January 18, 2002, Williams Field Services—Matagorda Offshore Company, LLC (WFS–MOC), One Williams Center, Tulsa, Oklahoma 74172, filed in Docket Nos. CP02–70–000, CP02–71–000 and CP02–72–000, an application pursuant to section 7(c) of the Natural Gas Act (NGA) and part 157 of the Commission's Rules and Regulations for a certificate of public convenience and necessity authorizing the acquisition and operation of the jurisdictional portion of the facilities known as the Matagorda Offshore Pipeline System (MOPS) located in, and offshore of, Texas, which consist of approximately 56 miles of pipeline and related facilities and owned by Northern Natural Gas Company. WFS–MOC also requests approval of its pro forma FERC Gas Tariff (Tariff) and its proposed initial transportation rates for firm and interruptible open-access transportation services. Additionally, WFS–MOC requests a blanket certificate of public convenience and necessity under subpart G of part 284 authorizing WFS–MOC to provide open-access transportation services under the Tariff; and a blanket certificate of public convenience and necessity under subpart F of part 157 authorizing WFS–MOC to perform certain routine construction, operation and abandonment activities, all as more fully set forth in the application which is on file with the Commission and open to public inspection. Copies of this filing are on file with the Commission and are available for public inspection. This filing may be viewed on the Web at *http://www.ferc.gov* using the ''RIMS'' link, select ''Docket #'' and follow the instructions (please call (202) 208–2222 for assistance).

Any questions regarding the application should be directed to Richard N. Stapler, Jr., Williams Field Services—Matagorda Offshore Company, LLC, 295 Chipeta Way, Salt Lake City, Utah 84108 at (801) 584–7068 or fax (801) 584–7862.

There are two ways to become involved in the Commission's review of this project. First, any person wishing to obtain legal status by becoming a party to the proceedings for this project should, on or before February 19, 2002, file with the Federal Energy Regulatory Commission, 888 First Street, NE., Washington, DC 20426, a motion to intervene in accordance with the requirements of the Commission's Rules of Practice and Procedure (18 CFR 385.214 or 385.211) and the Regulations under the NGA (18 CFR 157.10). A person obtaining party status will be placed on the service list maintained by the Secretary of the Commission and will receive copies of all documents filed by the applicant and by all other parties. A party must submit 14 copies of filings made with the Commission and must mail a copy to the applicant and to every other party in the proceeding. Only parties to the proceeding can ask for court review of Commission orders in the proceeding.

However, a person does not have to intervene in order to have comments considered. The second way to participate is by filing with the Secretary of the Commission, as soon as possible, an original and two copies of comments in support of or in opposition to this project. The Commission will

consider these comments in determining the appropriate action to be taken, but the filing of a comment alone will not serve to make the filer a party to the proceeding. The Commission's rules require that persons filing comments in opposition to the project provide copies of their protests only to the party or parties directly involved in the protest.

Persons who wish to comment only on the environmental review of this project should submit an original and two copies of their comments to the Secretary of the Commission. Environmental commenters will be placed on the Commission's environmental mailing list, will receive copies of the environmental documents, and will be notified of meetings associated with the Commission's environmental review process. Environmental commenters will not be required to serve copies of filed documents on all other parties. However, the non-party commenters will not receive copies of all documents filed by other parties or issued by the Commission (except for the mailing of environmental documents issued by the Commission) and will not have the right to seek court review of the Commission's final order.

The Commission may issue a preliminary determination on non-environmental issues prior to the completion of its review of the environmental aspects of the project. This preliminary determination typically considers such issues as the need for the project and its economic effect on existing customers of the applicant, on other pipelines in the area, and on landowners and communities. For example, the Commission considers the extent to which the applicant may need to exercise eminent domain to obtain rights-of-way for the proposed project and balances that against the non-environmental benefits to be provided by the project. Therefore, if a person has comments on community and landowner impacts from this proposal, it is important either to file comments or to intervene as early in the process as possible.

Comments, protests and interventions may be filed electronically via the Internet in lieu of paper. *See,* 18 CFR 385.2001(a)(1)(iii) and the instructions on the Commission's Web site under the ''e-Filing'' link.

If the Commission decides to set the application for a formal hearing before an Administrative Law Judge, the Commission will issue another notice describing that process. At the end of the Commission's review process, a final Commission order approving or denying a certificate will be issued.

C.B. Spencer,

Acting Secretary.

[FR Doc. 02–2474 Filed 1–31–02; 8:45 am]

BILLING CODE 6717–01–P

DEPARTMENT OF ENERGY

Federal Energy Regulatory Commission

[Docket No. RP02–79–001]

Williston Basin Interstate Pipeline Company; Notice of Compliance Filing

January 28, 2002.

Take notice that on January 18, 2002, Williston Basin Interstate Pipeline Company (Williston Basin), tendered for filing as part of its FERC Gas Tariff, Second Revised Volume No. 1, the following revised tariff sheets, with an effective date of December 26, 2001:

Tenth Revised Sheet No. 5
Eighth Revised Sheet No. 6
Eighth Revised Sheet No. 6A
Fifth Revised Sheet No. 7
Eighth Revised Sheet No. 8
Ninth Revised Sheet No. 9
Seventh Revised Sheet No. 10

Williston states that the filing is being made in response to the Commission's Order issued December 26, 2001 in Docket No. RP02–79–000. Williston Basin is submitting revised tariff sheets to reflect the Commission-approved confidentiality of its system maps.

Any person desiring to protest said filing should file a protest with the Federal Energy Regulatory Commission, 888 First Street, NE., Washington, DC 20426, in accordance with section 385.211 of the Commission's rules and regulations. All such protests must be filed in accordance with section 154.210 of the Commission's regulations. Protests will be considered by the Commission in determining the appropriate action to be taken, but will not serve to make protestants parties to the proceedings. Copies of this filing are on file with the Commission and are available for public inspection. This filing may also be viewed on the Web at *http://www.ferc.gov* using the ''RIMS'' link, select ''Docket#'' and follow the instructions (call 202–208–2222 for assistance). Comments, protests and interventions may be filed electronically via the Internet in lieu of paper. *See,* 18 CFR 385.2001(a)(1)(iii) and the instructions on the Commission's Web site under the ''e-Filing'' link.

C.B. Spencer,

Acting Secretary.

[FR Doc. 02–2479 Filed 1–31–02; 8:45 am]

BILLING CODE 6717–01–P

DEPARTMENT OF ENERGY

Federal Energy Regulatory Commission

[Docket No. RP97–28–009]

Wyoming Interstate Company, Ltd.; Notice of Negotiated Rate

January 28, 2002.

Take notice that on January 22, 2002, Wyoming Interstate Company, Ltd (WIC) tendered for filing a compliance filing pursuant to the Commission's order issued January 9, 2002 in this proceeding.

WIC states that the filing contains clarification and detailed explanation regarding the provisions of the negotiated rate transactions related to the Medicine Bow facilities.

Any person desiring to protest said filing should file a protest with the Federal Energy Regulatory Commission, 888 First Street, NE., Washington, DC 20426, in accordance with section 385.211 of the Commission's rules and regulations. All such protests must be filed in accordance with section 154.210 of the Commission's regulations. Protests will be considered by the Commission in determining the appropriate action to be taken, but will not serve to make protestants parties to the proceedings. Copies of this filing are on file with the Commission and are available for public inspection. This filing may also be viewed on the Web at *http://www.ferc.gov* using the ''RIMS'' link, select ''Docket#'' and follow the instructions (call 202–208–2222 for assistance). Comments, protests and interventions may be filed electronically via the Internet in lieu of paper. *See,* 18 CFR 385.2001(a)(1)(iii) and the instructions on the Commission's Web site under the ''e-Filing'' link.

C.B. Spencer,

Acting Secretary.

[FR Doc. 02–2476 Filed 1–31–02; 8:45 am]

BILLING CODE 6717–01–P

ENVIRONMENTAL PROTECTION AGENCY

[FRL–7136–9]

Agency Information Collection Activities: Proposed Collection; Comment Request; Notice of Agency Information Collection Activities for Tribal Lands Hazardous Waste Sites Survey

AGENCY: Environmental Protection Agency (EPA).

ACTION: Notice.

SUMMARY: In compliance with the Paperwork Reduction Act (44 U.S.C. 3501 *et seq.*), this document announces that EPA is planning to submit the following proposed Information Collection Request (ICR) to the Office of Management and Budget (OMB): Tribal Lands Hazardous Waste Sites Survey, EPA ICR Number 2059.01. Before submitting the ICR to OMB for review and approval, EPA is soliciting comments on specific aspects of the proposed information collection as described below.

DATES: Comments must be submitted on or before April 2, 2002.

ADDRESSES: Send comments to Kirby Biggs, Program Analyst, Office of Emergency and Remedial Response, U.S. EPA, Mail Code 5204G, 1200 Pennsylvania Avenue, NW., Washington, DC 20460.

FOR FURTHER INFORMATION CONTACT: Kirby Biggs, tel. (703) 308–8506, e-mail: *Biggs.Kirby@epa.gov*

SUPPLEMENTARY INFORMATION:

Affected entities: Entities potentially affected by this action are those which are officials or staff of tribal environmental departments or, otherwise, the environmental contact person for an Indian tribe.

Title: Tribal Lands Hazardous Waste Sites Survey (EPA ICR No. 2059.01.)

Abstract: The U.S. Environmental Protection Agency is conducting a study to detect and assess potential hazards to tribal communities from hazardous substances at contaminated sites in or near Indian Country. EPA will survey federally recognized tribes to identify sites that fall under the Comprehensive Environmental Response, Compensation and Liability Act (CERCLA), sites regulated under the Resource Conservation and Recovery Act (RCRA), and federal facility sites that are suspected of having an impact on human health and the environment in or near Indian lands.

This information will serve to inform EPA of the extent and location of sites potentially affecting Indian tribes and those sites of concern to the tribes. The inventory and potential risks to Indian Country will provide EPA with vital information regarding assessment of hazardous substances on and potential risks to Indian tribes from these sites. Tribal participation with the survey is voluntary.

An agency may not conduct or sponsor, and a person is not required to respond to, a collection of information unless it displays a currently valid OMB control number. The OMB control numbers for EPA's regulations are listed in 40 CFR part 9 and 48 CFR chapter 15.

The EPA would like to solicit comments to:

(i) Evaluate whether the proposed collection of information is necessary for the proper performance of the functions of the agency, including whether the information will have practical utility;

(ii) evaluate the accuracy of the agency's estimate of the burden of the proposed collection of information, including the validity of the methodology and assumptions used;

(iii) enhance the quality, utility, and clarity of the information to be collected; and

(iv) minimize the burden of the collection of information on those who are to respond, including through the use of appropriate automated electronic, mechanical, or other technological collection techniques or other forms of information technology, *e.g.,* permitting electronic submission of responses.

Burden Statement: The estimated reporting and record keeping burden for this collection is estimated to average two hours thirty minutes per response. The estimated number of respondents is 550 and the total annual hour burden is 1,375 hours. The frequency of response is once.

Burden means the total time, effort, or financial resources expended by persons to generate, maintain, retain, or disclose or provide information to or for a Federal agency. This includes the time needed to review instructions; develop, acquire, install, and utilize technology and systems for the purposes of collecting, validating, and verifying information, processing and maintaining information, and disclosing and providing information; adjust the existing ways to comply with any previously applicable instructions and requirements; train personnel to be able to respond to a collection of information; search data sources; complete and review the collection of information; and transmit or otherwise disclose the information.

Dated: January 24, 2002.

David Evans,

Director, State, Tribal and Site Investigation Center, Office Of Emergency and Remedial Response, Office of Solid Waste and Emergency Response.

[FR Doc. 02–2510 Filed 1–31–02; 8:45 am]

BILLING CODE 6560–50–P

ENVIRONMENTAL PROTECTION AGENCY

[ER–FRL–6626–2]

Environmental Impact Statements and Regulations; Availability of EPA Comments

Availability of EPA comments prepared pursuant to the Environmental Review Process (ERP), under section 309 of the Clean Air Act and section 102(2)(c) of the National Environmental Policy Act as amended. Requests for copies of EPA comments can be directed to the Office of Federal Activities at (202) 564–7167.

An explanation of the ratings assigned to draft environmental impact statements (EISs) was published in **Federal Register** dated May 18, 2001 (66 FR 27647).

Draft EISs

ERP No. D–AFS–L65393–WA Rating LO, Gardin—Taco Ecosystem Restoration Projects, Implementation, Vegetative Restoration, Road Closures, and Decommissioning, and other Road Improvements, Colville National Forest, Newport Ranger District, Pend Oreille and Stevens Counties, WA.

Summary: EPA had no objection to the proposed project. EPA did however request clarifying information on water quality, smoke impacts from prescribed fires and cumulative effects.

ERP No. D–COE–G39035–AR Rating LO, Greers Ferry Lake Shoreline Management Plan (SMP), Implementing Revision to Replace the 1994 Shore Management Plan, Revision include Zoning of Limited Development Areas, Vegetation Modification Provisions for Grandfathered Docks and Restrictions on Boats, Van Buren, Cleburne, Searcy, Stone, White, Independence and Pope Counties, AR.

Summary: EPA has Lack of Objections to the selection of the preferred alternatives and requests additional information in the Final EIS to more clearly identify the informational needs and strengthen the impact analysis and NEPA decisionmaking process.

ERP No. D–COE–L39058–00 Rating EO2, McNary Reservoir and Lower Snake River Reservoirs, To Maintain the Authorized Navigation Channel,

Dredged Material Management Plan (DMMP), Walla Walla District, Lower Snake River and Columbia River, ID and WA.

Summary: EPA expressed environmental objections related to the lack of a sediment reduction strategy, the effects of the proposed creation of salmon habitat, sediment characterization, and the need to form and utilize the proposed Local Sediment Management Group. EPA recommended that these topics, as well as a number of others, be addressed further in the EIS.

ERP No. D–DOE–E09808–KY Rating EC2, Kentucky Pioneer Integrated Gasification Combined Cycle Demonstration Project, Constructing and Operating a 540 megawatt-electric Plant, Clean Coal Technology Program, Clark County, KY.

Summary: EPA expressed environmental concerns with potential impacts to threatened and endangered species and requested that DOE coordinate with the Fish and Wildlife Service on such species. EPA also requested that DOE coordinate with the Corps of Engineers on potential wetlands impacts and that DOE provide additional information on cooling tower discharges.

ERP No. D–IBR–K61154–AZ Rating EC2, Reach 11 Recreation Master Plan, Central Arizona Project (CAP) Canal, Between Cave Creek and Scottdale Roads, For Recreational Purposes, Flood Detention Basin, City of Phoenix, Maricopa County, AZ.

Summary: EPA expressed environmental concerns and requested additional information regarding impacts to water resources and sensitive riparian habitat.

ERP No. D–MMS–A02242–00 Rating EC2, Outer Continental Shelf Oil and Gas Leasing Program: From Mid-2002 Through Mid-2007, 5-Year Schedule Leasing Program for 20 Sales in 8 of the Outer Continental Shelf Planning Areas, AL, AK, CA, FL, LA, MS, OR, TX and WA.

Summary: EPA expressed environmental concerns regarding air quality conformity and environmental justice issues. EPA requested that additional information on these issues be included in the final document.

ERP No. DS–BIA–K60031–NV Rating EC2, Moapa Paiute Energy Center/ Associated Facilities Construction, Operation and Maintenance of a 760 Megawatt (MW) Baseload Natural Gas-Fired Combined Cycle Power Plant, New Information concerning Structural, Route and Substation Location Changes, Moapa River Indian Reservation and Bureau of Land Management Lands, Clark County, NV.

Summary: EPA continues to have unresolved environmental concerns, and has requested additional information regarding impacts of the proposed project on surface and groundwater. In addition, EPA encouraged BIA to ensure that permit activities by the project applicant do not limit the consideration of all reasonable alternatives.

ERP No. DS–FHW–G40165–NM Rating LO, US 70 Corridor Improvement, Between Ruidoso Downs to Riverside, New Information and Circumstances, Implementation, Right-of-Way Acquisition, Lincoln County, NM.

Summary: EPA has no objections to the selection of the preferred alternative with implementation of the mitigation measures as described in the supplemental DEIS. EPA requested that the final mitigation plan be incorporated in the Record of Decision Document.

Final EISs

ERP No. F–AFS–J65310–00 Dakota Prairie Grasslands, Nebraska National Forest Units and Thunder Basin National Grassland, Land and Resource Management Plans 1999 Revisions, Implementation, MT, NB, WY, ND and SD.

Summary: EPA continued to express environmental concerns with Wilderness acreage and Wild and Scenic River mile designations that have decreased since the DEIS. Monitoring should be a top priority to ensure that the outstanding characteristics of these areas are not diminished by continued use at a higher management class level.

ERP No. F–AFS–J65335–MT Dry Fork Vegetation Restoration Project, To Improve Forest and Watershed Health and Sustainability, King Hill Ranger District, Lewis and Clark National Forest, Cascade and Judith Basin Counties, MT.

Summary: EPA continues to have environmental concerns associated with road construction and timber harvest.

ERP No. F–AFS–J65352–MT Kelsey-Beaver Fire Recovery Project, Fuel Reduction and Salvage of Fire-Killed Trees within Roderick South, Kelsey Creek and Upper Beaver Areas, Implementation, Kootenai National Forest, Three Rivers Ranger District, Lincoln County, MT.

Summary: EPA continued to express environmental concerns and recommened that winter logging be considered in erodible areas to reduce sediment production. EPA also noted the need for consistency of proposed actions with State TMDL development needs for the 303(d) listed South Fork Yaak River.

ERP No. F–APH–A82125–00 Fruit Fly Cooperative Control Program, Eradication Program, Implementation,.

Summary: The Final EIS addresses EPA's principal suggestion for improvements to the draft EIS.

ERP No. F–COE–J36050–ND Maple River Dam and Reservoir, Construction and Operation, Flood Control, Cass County Joint Water Resource District, Cass County, ND.

Summary: EPA continues to have environmental concerns regarding the relatively small area benefitting from the dam when compared to the impacts to cultural resources and riparian/wetland habitat.

ERP No. F–IBR–L65374–WA Potholes Reservoir Resource Management Plan, Implementation, COE Section 404 and NPDES Permits, Moses Lake, Grant County, WA.

Summary: No formal comment letter was sent to the preparing agency.

ERP No. F–STB–J53005–00 Powder River Basin Expansion Project, Construction of New Rail Facilities, Finance Docket No. 33407 Dakota, Minnesota and Eastern Railroad, SD, WY and MN.

Summary: EPA expressed environmental concerns for the lack of mitigation for the anticipated air impacts to Badlands and Wind Cave National Parks in South Dakota. Additionally, EPA is concerned about the potential placement of fill in the Blue Earth River if the Mankato by-pass (Option M2) is selected.

ERP No. F–USA–K11099–CA Oakland Army Base Disposal and Reuse Plan, Implementation, City of Oakland, Alameda County, CA.

Summary: No formal comment letter was sent to the preparing agency.

ERP No. FA–AFS–J65287–UT Rendezvous Vegetation Management Project, To the South Spruce Ecosystem Rehabilitation Project, Implementation, Dixie National Forest, Cedar City Ranger District, Iron and Kane Counties, UT.

Summary: EPA expressed environmental concerns about considering only No Action and one alternative with separable actions. Environmental concerns included impacts on old-growth forest and wildlife habitat. The project Purpose is unsupported by the data presented for the Proposed Action.

Dated: January 29, 2002.

B. Katherine Biggs,

Associate Director, NEPA Compliance Division, Office of Federal Activities.

[FR Doc. 02–2523 Filed 1–31–02; 8:45 am]

BILLING CODE 6560–50–P

ENVIRONMENTAL PROTECTION AGENCY

[ER–FRL–6626–1]

Environmental Impact Statements; Notice of Availability

Responsible Agency: Office of Federal Activities, General Information (202) 564–7167 or *www.epa.gov/oeca/ofa.* Weekly receipt of Environmental Impact Statements Filed January 21, 2002 Through January 25, 2002 Pursuant to 40 CFR 1506.9.

EIS No. 020031, Draft EIS, FHW, LA, Bayou Barataria Bridge/LA–302 Replacement, LA–45/Jean Lafitte Boulvard to LA–3257/Privateer Boulvard, Funding and US Army COE Section 404 and US Coast Guard Bridge Permits Issuance, Communities of Jean Lafitte and Barataria, Jefferson Parish, LA, Comment Period Ends: March 18, 2002, Contact: William C. Farr (225) 757–7615

EIS No. 020032, Draft Supplement, GSA, CA, San Diego-United States Courthouse Annex Project, Site Selection and Construction, New Information concerning Addition of the Union Street with Hotel San Diego Facade and Lobby Alternative, Central Business District (CBD), City of San Diego, San Diego County, CA, Comment Period Ends: March 18, 2002, Contact: Rosanne Nieto (415) 522–3490

EIS No. 020033, Final EIS, COE, NJ, Great Egg Harbor Inlet to Townsends Inlet, Storm Damage Reduction for Ocean City and Ludlam Island Utilizing Beachfill to Construct a Protective Berm and Dune, City of Ocean City, Strathmere (Township of Upper), City of Sea Isle City, Cape May County, NJ, Wait Period Ends: March 04, 2002, Contact: Robert L. Callegari (215) 656–6555

EIS No. 020034, Final EIS, GSA, NY, U.S. Mission to the United Nations (USUN), Demolition of Current USUN and the Construction of a New Facility on the Same Site, Located at 799 United Nations Plaza, New York, NY, Wait Period Ends: March 04, 2002, Contact: Peter Sneed (212) 264–3581

EIS No. 020035, Final EIS, AFS, OK, Quachita National Forest, An Amendment to the Land and Resource Management Plan, Implementation, Glover River, McCurtain County, OK, Wait Period Ends: March 04, 2002, Contact: Bill Pell (501) 321–5320

EIS No. 020036, Draft EIS, BLM, NV, Table Mountain Wind Generating Facility Project, Construction of a 150 to 205 Megawatt (MW) Wind Powered Electric Generation Facility and Ancillary Facilities, Right-of-Way Grant, Spring Mountain Range between the Communities of Good Springs, Sandy Valley, Jean and Primm, Clark County, NV, Comment Period Ends: April 01, 2002, Contact: Jerry Crockford (505) 599–6333

EIS No. 020037, Draft EIS, AFS, OR, CA, Programmatic—Siskiyou National Forest Suction Dredging Activities, Operating Plan Terms and Conditions Approval, Coos, Curry and Josephine Counties, OR and Del Norte County, CA, Comment Period Ends: March 18, 2002, Contact: Roger Mendenhall (541) 471–6521. This document is available on the Internet at: *http://www.fs.fed.us.r6/siskiyou*

EIS No. 020038, Draft EIS, FHW, MI, M–15 Reconstruction, I–75 to I–69, Funding and NPDES and US Army COE Section 404 Permits Issuance, Oakland and Genesse Counties, MI, Comment Period Ends: April 29, 2002, Contact: Ronald Kinney (517) 335–2621. This document is available on the Internet at: *http://www.mdot.state.mi.us/m15/*

EIS No. 020039, Draft EIS, JUS, CA, 14-Mile Border Infrastructure System Completion along the United States and Mexico Border, Areas I, V and VI, Pacific Ocean to just east of Tin Can Hill, San Diego County, CA, Comment Period Ends: April 01, 2002, Contact: Russell R. D'Hondt (202) 305–4386

EIS No. 020040, Final EIS, DOE, OR, Umatilla Generating Project, Construction and Operation, Gas-Fired Combined Cycle Electric Power Generation Plant, Nominal Generation Capacity of 550 megawatts (MW) Connection to the Regional Grid at McNary Substation, Umatilla County, AZ, Wait Period Ends: March 04, 2002, Contact: Inez Graetzer (503) 230–3786. This document is available on the Internet at:*http://www.efw.bpa.gov*

EIS No. 020041, Final SUPPLEMENT, NRC, Generic—license Renewal of Nuclear Power Plants, Supplement 5, Turkey Point Units 3 and 4 (NUREG–1437), Operating License Renewal, Biscayne Bay, Miami-Dade County, FL, Wait Period Ends: March 04, 2002, Contact: Dr. Michael T. Masnik (301) 415–1191

Amended Notices

EIS No. 010532, Draft EIS, AFS, IL, Natural Area Trails Project, Construction, Reconstruction, Maintenance and Designation of Trails for Hikers and Equestrian Use, Approval of Site-Specific Mitigation and/or Monitoring Standards, Shawnee National Forest, Jackson, Pope, Johnson, Union, Hardin and Saline Counties, IL, Comment Period Ends: March 11, 2001, Contact: Richard Johnson (618) 658–2111. Revision of FR notice published on 12/31/2001: CEQ Comment Period Ending 02/11/2002 has been Corrected to 03/11/2002

EIS No. 020017, Draft EIS, BLM, WY, Powder River Basin Oil and Gas Project, To Extract, Transport, and Sell Oil and Natural Gas Resource, Application of Permit to Drill (APD), Special Use Permit and Right-of-Way Grant, Campbell, Converse, Johnson and Sheridan Counties, WY, Due: April 18, 2002, Contact: Paul Beels (307) 684–1100. Published FR 01–18–02—Correction to Web site Address. This document is available on the Internet at: *http://www.prb-eis.org*

Dated: January 29, 2002.

B. Katherine Biggs,

Associate Director, NEPA Compliance Division, Office of Federal Activities.

[FR Doc. 02–2524 Filed 1–31–02; 8:45 am]

BILLING CODE 6560–50–P

ENVIRONMENTAL PROTECTION AGENCY

[FRL–7136–8]

Environmental Laboratory Advisory Board Meeting Dates, and Agenda

AGENCY: Environmental Protection Agency.

ACTION: Notice of Teleconference Meetings.

SUMMARY: The Environmental Protection Agency's Environmental Laboratory Advisory Board (ELAB) will have teleconference meetings on the third Wednesday of each month for 2002, with the first meeting occurring February 20, at 11 a.m. EST to discuss the ideas and views presented at the previous ELAB meetings, as well as new business. Items to be discussed include; recommendations to restructure the National Environmental Laboratory Advisory Board (NELAC) to allow it to better serve the future needs of EPA and the States; approaches to win acceptance and bring smaller environmental laboratories into a national program for laboratory accreditation; and recommendations on EPA's future role in NELAC. ELAB is soliciting input from the public on these and other issues related to the National Environmental Laboratory Accreditation Program (NELAP) and the NELAC standards. Written comments on NELAP laboratory accreditation and the NELAC

standards are encouraged and should be sent to Edward Kantor, DFO, P.O. Box 93478, Las Vegas NV 89193, or faxed to (702) 798–2261 or emailed to *kantor.edward@epa.gov.* Members of the public are invited to listen the teleconference calls, and time permitting, will be allowed to comment on issues discussed during this and previous ELAB meetings. Those persons interested in attending this teleconference should call Edward Kantor at 702–798–2690 to get the conference call in number. The number of lines are limited and will be distributed on a first come, first serve basis. Preferences will be given to a group wishing to attend over an individual.

Dated January 23, 2002.

John G. Lyon,

Director, Environmental Sciences Division, National Environmental Research Laboratory.

[FR Doc. 02–2511 Filed 1–31–02; 8:45 am]

BILLING CODE 6560–50–P

FEDERAL ACCOUNTING STANDARDS ADVISORY BOARD

Notice of Meeting for February 2002

Board Action: Pursuant to the Federal Advisory Committee Act (Pub. L. No. 92–463), as amended, and the FASAB Rules of Procedure, as amended in October, 1999, notice is hereby given that the Federal Accounting Standards Advisory Board (FASAB) will meet on Wednesday, February 27 and Thursday, February 28, 2002, in room 7C13 of the GAO Building.

The purpose of the meeting is to discuss issues related to:

—National Defense PP&E,
—Consolidated Financial Reporting,
—Trust Fund Disclosures,
—Stewardship Reporting, and
—Technical Agenda

A more detailed agenda can be obtained from the FASAB Web site (*http://www.fasab.gov/* one week prior to each meeting.

Following the February meeting, the schedule for the next five meetings of the Board is as follows:

—Tuesday and Wednesday, April 23 and 24, 2002;
—Tuesday and Wednesday, June 18 and 19, 2002;
—Wednesday and Thursday, August 7 and 8, 2002;
—Wednesday and Thursday, October 9 and 10, 2002;
Thursday and Friday, December 11 and 12, 2002.

The purpose of these meetings will be to discuss issues related to:

—Stewardship Reporting;
—National Defense Property, Plant & Equipment;
—Accounting and Auditing Policy Committee issues; and
—Any other topics as needed.

A Steering Committee meeting of the Board's Principal Board members will be held in conjunction with each of the Board meetings. A more detailed agenda for each Board meeting can be seen on the FASAB Web site *http://www.fasab.gov/* one week prior to each meeting. Meetings will be held in room 7C13 of the GAO Building.

Any interested person may attend the meetings as an observer. Board discussion and reviews are open to the public. GAO Building security requires advance notice of your attendance. For the February meeting, please notify FASAB by February 26 of your planned attendance by calling 202–512–7350, and for the subsequent meetings one day prior to the respective meeting.

FOR FURTHER INFORMATION CONTACT: Wendy Comes, Executive Director, 441 G St., NW., Mailstop 6K17V, Washington, DC 20548, or call (202) 512–7350.

Authority: Federal Advisory Committee Act. Pub. L. No. 92–463.

Dated: January 28, 2002.

Wendy M. Comes,

Executive Director.

[FR Doc. 02–2527 Filed 1–31–02; 8:45 am]

BILLING CODE 1610–01–M

FEDERAL COMMUNICATIONS COMMISSION

Notice of Public Information Collection(s) Being Reviewed by the Federal Communications Commission

January 23, 2002.

SUMMARY: The Federal Communications Commission, as part of its continuing effort to reduce paperwork burden, invites the general public and other Federal agencies to take this opportunity to comment on the following information collection(s), as required by the Paperwork Reduction Act of 1995, Pub. L. 104–13. An agency may not conduct or sponsor a collection of information unless it displays a currently valid control number. No person shall be subject to any penalty for failing to comply with a collection of information subject to the Paperwork Reduction Act (PRA) that does not display a valid control number. Comments are requested concerning (a) whether the proposed collection of information is necessary for the proper performance of the functions of the Commission, including whether the information shall have practical utility; (b) the accuracy of the Commission's burden estimate; (c) ways to enhance the quality, utility, and clarity of the information collected; and (d) ways to minimize the burden of the collection of information on the respondents, including the use of automated collection techniques or other forms of information technology.

DATES: Written comments should be submitted on or before March 4, 2002. If you anticipate that you will be submitting comments, but find it difficult to do so within the period of time allowed by this notice, you should advise the contact listed below as soon as possible.

ADDRESSES: Direct all comments to Judy Boley, Federal Communications Commission, Room 1–C804, 445 12th Street, SW, DC 20554 or via the Internet to *jboley@fcc.gov.*

FOR FURTHER INFORMATION CONTACT: For additional information or copies of the information collection(s), contact Judy Boley at 202–418–0214 or via the Internet at *jboley@fcc.gov.*

SUPPLEMENTARY INFORMATION:

OMB Control No.: 3060–0848.

Title: Deployment of Wireline Services Offering Advanced Telecommunications Capability, CC Docket 98–147.

Form No.: N/A.

Type of Review: Extension of currently approved collection.

Respondents: Business or other for-profit.

Number of Respondents: 1,750.

Estimated Time Per Response: 94.62 hour (average).

Frequency of Response: On occasion; Annual; Recordkeeping; and Third Party Disclosure reporting requirements.

Total Annual Burden: 165,600 hours.

Total Annual Cost: $0.

Needs and Uses: In the Fourth Report and Order issued in CC Docket No. 98–147, the Commission requires a certification of interstate traffic for certain collocating carriers and the provision of a detailed description of available collocation space from incumbent local exchange carriers in certain circumstances. The requirements implement section 706 of the Communications Act of 1934, as amended, to promote deployment of advanced services without significantly degrading the performance of other services.

Federal Communications Commission.

William F. Caton,

Acting Secretary.

[FR Doc. 02–2463 Filed 1–31–02; 8:45 am]

BILLING CODE 6712–01–P

FEDERAL COMMUNICATIONS COMMISSION

Notice of Public Information Collection(s) Being Reviewed by the Federal Communications Commission for Extension Under Delegated Authority, 5 CFR Part 1320 Authority, Comments Requested

January 23, 2002.

SUMMARY: The Federal Communications Commission, as part of its continuing effort to reduce paperwork burden, invites the general public and other Federal agencies to take this opportunity to comment on the following information collection(s), as required by the Paperwork Reduction Act of 1995, Pub. L. 104–13. An agency may not conduct or sponsor a collection of information unless it displays a currently valid control number. No person shall be subject to any penalty for failing to comply with a collection of information subject to the Paperwork Reduction Act (PRA) that does not display a valid control number. Comments are requested concerning (a) whether the proposed collection of information is necessary for the proper performance of the functions of the Commission, including whether the information shall have practical utility; (b) the accuracy of the Commission's burden estimate; (c) ways to enhance the quality, utility, and clarity of the information collected; and (d) ways to minimize the burden of the collection of information on the respondents, including the use of automated collection techniques or other forms of information technology.

DATES: Persons wishing to comment on this information collection should submit comments on or before April 2, 2002.

ADDRESSES: Direct all comments to Les Smith, Federal Communications Commissions, Room 1–A804, 445 12th Street, SW, Washington, DC 20554 or via the Internet to *lesmith@fcc.gov.*

FOR FURTHER INFORMATION CONTACT: For additional information or copies of the information collections contact Les Smith at 202–418–0217 or via the Internet at *lesmith@fcc.gov.*

SUPPLEMENTARY INFORMATION: *OMB Control Number:* 3060–0841.

Title: Public Notice—Additional Processing Guidelines for DTV (nonchecklist applications).

Form Numbers: FCC 301/340.

Type of Review: Extension of currently approved collection.

Respondents: Businesses or other for-profit entities; Not-for-profit institutions.

Number of Respondents: 100.

Estimated Time Per Response: 3 hours.

Frequency of Response: On occasion reporting requirements.

Total Annual Burden: 300 hours.

Total Annual Cost: $360,000.

Needs and Uses: The FCC released a public notice on August 10, 1998 that explained how ''nonchecklist'' applications, i.e., applications that do not conform to certain criteria to enable ''fast-track processing,'' would be processed for DTV station construction permits. This public notice explained what should be included in engineering showings and other types of application exhibits and cover letters. The public notice for ''nonchecklist'' applications should help to resolve processing uncertainties, enable the preparation of complete and quality applications, and hasten the authorization of DTV service. The FCC staff will use these data to ensure that interference to other DTV and NTSC stations is minimized.

OMB Control Number: 3060–1001.

Title: Application for Extension of Time to Construct a Digital Television Broadcast Station.

Form Number: FCC 337.

Type of Review: Extension of currently approved collection.

Respondents: Businesses or other for-profit, not-for-profit institutions.

Number of Respondents: 600.

Estimated Hours Per Response: 1.5 to 4 hours.

Frequency of Response: On occasion reporting requirements.

Total Annual Burden: 400 hours.

Total Annual Cost: $79,006.

Needs and Uses: FCC Form 337 is used by permittees to apply for an extension of time within which to construct a commercial or noncommercial educational digital television station (DTV). The FCC uses the data to determine, on a case-by-case basis, whether a broadcaster should be afforded additional time to construct its DTV facilities. In addition, analog TV licensees may request special temporary authority (STA) to construct more minimal initial DTV facilities than those specified in an outstanding construction permit. The STA data are used by the FCC to determine whether the DTV permittee has constructed and is operating with the minimum initial DTV facilities sufficient to meet its construction deadline.

Federal Communications Commission.

William F. Caton,

Acting Secretary.

[FR Doc. 02–2464 Filed 1–31–02; 8:45 am]

BILLING CODE 6712–01–P

FEDERAL COMMUNICATIONS COMMISSION

Public Information Collections Approved by Office of Management and Budget

January 25, 2002.

The Federal Communications Commission (FCC) has received Office of Management and Budget (OMB) approval for the following public information collections pursuant to the Paperwork Reduction Act of 1995, Pub. L. 104–13. An agency may not conduct or sponsor and a person is not required to respond to a collection of information unless it displays a currently valid control number. For further information contact Shoko B. Hair, Federal Communications Commission, (202) 418–1379.

Federal Communications Commission

OMB Control No.: 3060–0787.

Expiration Date: 07/31/2002.

Title: Implementation of the Subscriber Carrier Selection Changes Provisions of the Telecommunications Act of 1996; Policies and Rules Concerning Unauthorized Changes of Consumers Long Distance.

Form No.: FCC Form 478.

Respondents: Business or other for-profit.

Estimated Annual Burden: 1850 respondents; 14 hour per response (avg.) (7 hours per filing); 25,900 total annual burden hours. (Estimates for FCC Form 478 requirements only).

Estimated Annual Reporting and Recordkeeping Cost Burden: $0.

Frequency of Response: Semi-Annual; Recordkeeping.

Description: Section 258 of the Communications Act of 1934 (Act), as amended by the Telecommunications Act of 1996, makes it unlawful for any telecommunications carrier to ''submit or execute a change in a subscriber's selection of a provider of telecommunications exchange service or telephone toll service except in accordance with such verification procedures as the Commission shall prescribe.'' The section further provides that any telecommunications carrier that violates such verification procedures and that collects charges for telephone exchange service or telephone toll service from a subscriber shall be liable to the carrier previously selected by the subscriber in an amount equal to all charges paid by the subscriber after such violation. The rules and requirements implementing section 258 can be found primarily at 47 CFR part 64. FCC Form 478, Telecommunications Slamming Complaint Reporting Form, is mandated

by 47 CFR 64.1180. Pursuant to Section 64.1180(a), each provider of telephone exchange and/or telephone toll service shall submit to the Commission via e-mail (*slamming478@fcc.gov*), U.S. Mail, or facsimile a slamming complaint reporting form identifying the number of slamming complaints received during the reporting period and other information as specified in subsection (b) of section 64.1180. *See* 47 CFR 64.1180. Carriers are required to complete and file a copy of the FCC Form 478. Carriers are encouraged to maintain all records regarding slamming complaints for at least 24 month from the date on which they receive written, electronic, or oral contact by a consumer alleging that an unauthorized change in his/her preferred carrier was made by the carrier or by another carrier. The Commission recently revised FCC Form 478 to clarify for carriers the requirements of the form. Among other things, the instructions in Block 3 and Block 4 have been clarified so that carriers count complaints on a per-customer basis rather than a per-line basis. To the extent a carrier cannot report its complaints on a per-customer basis, the carrier is asked to explain the methodology it has chosen to count the complaints, and why it has chosen that methodology. In addition, FCC Form 478 instructions at Lines 112, 113 and 114 were amended to clarify when a complaint should be considered resolved under the Commission's rules. The information will be used to implement section 258 of the Act. The information will strengthen the ability of our rules to deter slamming, while protecting consumers from carriers that may take advantage of consumer confusion over different types of telecommunications services. The information gathered in response to the reporting requirement will enable the Commission to identify, as soon as possible, the carriers that repeatedly initiate unauthorized changes. A copy of the revised FCC Form 478 may be downloaded from the Commission's forms Web page, *www.fcc.gov/formpage.html*. Obligation to respond: Mandatory.

Public reporting burden for the collections of information are as noted above. Send comments regarding the burden estimates or any other aspect of the collections of information, including suggestions for reducing the burden to Performance Evaluation and Records Management, Washington, DC 20554.

Federal Communications Commission.

William F. Caton,

Acting Secretary.

[FR Doc. 02–2465 Filed 1–31–02; 8:45 am]

BILLING CODE 6712–01–P

FEDERAL DEPOSIT INSURANCE CORPORATION

Sunshine Act Meeting

Pursuant to the provisions of the ''Government in the Sunshine Act'' (5 U.S.C. 552b), notice is hereby given that at 10:11 a.m. on Tuesday, January 29, 2002, the Board of Directors of the Federal Deposit Insurance Corporation met in closed session to consider matters relating to the Corporation's personnel, supervisory, and resolution activities.

In calling the meeting, the Board determined, on motion of Director John M. Reich (Appointive), seconded by Director John D. Hawke, Jr. (Comptroller of the Currency), and concurred in by Director James E. Gilleran (Director, Office of Thrift Supervision), and Chairman Donald E. Powell, that Corporation business required its consideration of the matters on less than seven days' notice to the public; that no earlier notice of the meeting was practicable; that the public interest did not require consideration of the matters in a meeting open to public observation; and that the matters could be considered in a closed meeting by authority of subsections (c)(2), (c)(4), (c)(6), (c)(8), (c)(9)(A)(ii), and (c)(9)(B) of the ''Government in the Sunshine Act'' (5 U.S.C. 552b(c)(2), (c)(4), (c)(6), (c)(8), (c)(9)(A)(ii), and (c)(9)(B)).

The meeting was held in the Board Room of the FDIC Building located at 550–17 Street, NW., Washington, DC.

Dated: January 29, 2002.

Federal Deposit Insurance Corporation.

James D. LaPierre,

Deputy Executive Secretary.

[FR Doc. 02–2585 Filed 1–30–02; 11:28 am]

BILLING CODE 6714–01–M

FEDERAL RESERVE SYSTEM

Change in Bank Control Notices; Acquisition of Shares of Bank or Bank Holding Companies

The notificants listed below have applied under the Change in Bank Control Act (12 U.S.C. 1817(j)) and § 225.41 of the Board's Regulation Y (12 CFR 225.41) to acquire a bank or bank holding company. The factors that are considered in acting on the notices are set forth in paragraph 7 of the Act (12 U.S.C. 1817(j)(7)).

The notices are available for immediate inspection at the Federal Reserve Bank indicated. The notices also will be available for inspection at the office of the Board of Governors. Interested persons may express their views in writing to the Reserve Bank indicated for that notice or to the offices of the Board of Governors. Comments must be received not later than February 15, 2002.

A. Federal Reserve Bank of Atlanta (Cynthia C. Goodwin, Vice President) 1000 Peachtree Street, N.E., Atlanta, Georgia 30309–4470:

1. Mr. Scott Manship Niswonger. Greeneville, Tennessee; to acquire voting shares of PCB Bancorp, Inc., Johnson City, Tennessee, and thereby indirectly acquire voting shares of People's Community Bank, Johnson City, Tennessee.

B. Federal Reserve Bank of Chicago (Phillip Jackson, Applications Officer) 230 South LaSalle Street, Chicago, Illinois 60690–1414:

1. John T. Dancer, Sun City West, Arizona; to retain voting shares of Stockbridge Bancorporation, Inc., Stockbridge, Michigan, and thereby indirectly retain voting shares of Stockbridge State Bank, Stockbridge, Michigan.

Board of Governors of the Federal Reserve System, January 28, 2002.

Robert deV. Frierson,

Deputy Secretary of the Board.

[FR Doc. 02–2433 Filed 1–31–02; 8:45 am]

BILLING CODE 6210–01–S

FEDERAL RESERVE SYSTEM

Formations of, Acquisitions by, and Mergers of Bank Holding Companies

The companies listed in this notice have applied to the Board for approval, pursuant to the Bank Holding Company Act of 1956 (12 U.S.C. 1841 *et seq.*) (BHC Act), Regulation Y (12 CFR Part 225), and all other applicable statutes and regulations to become a bank holding company and/or to acquire the assets or the ownership of, control of, or the power to vote shares of a bank or bank holding company and all of the banks and nonbanking companies owned by the bank holding company, including the companies listed below.

The applications listed below, as well as other related filings required by the Board, are available for immediate inspection at the Federal Reserve Bank indicated. The application also will be available for inspection at the offices of the Board of Governors. Interested

persons may express their views in writing on the standards enumerated in the BHC Act (12 U.S.C. 1842(c)). If the proposal also involves the acquisition of a nonbanking company, the review also includes whether the acquisition of the nonbanking company complies with the standards in section 4 of the BHC Act (12 U.S.C. 1843). Unless otherwise noted, nonbanking activities will be conducted throughout the United States. Additional information on all bank holding companies may be obtained from the National Information Center website at www.ffiec.gov/nic/.

Unless otherwise noted, comments regarding each of these applications must be received at the Reserve Bank indicated or the offices of the Board of Governors not later than February 25, 2002.

A. Federal Reserve Bank of Chicago (Phillip Jackson, Applications Officer) 230 South LaSalle Street, Chicago, Illinois 60690–1414:

*1. Grant County State Bancshares, Inc., Employees Stock Ownership Plan,*Swayzee, Indiana; to acquire and additional 1.29 percent, for a total of 33.28 percent of the voting shares of Grant County State Bancshares, Inc., Swayzee, Indiana, and thereby indirectly acquire additional shares of Grant County State Bank, Swayzee, Indiana.

Board of Governors of the Federal Reserve System, January 28, 2002.

Robert deV. Frierson,

Deputy Secretary of the Board.

[FR Doc. 02–2432 Filed 1–31–02; 8:45 am]

BILLING CODE 6210–01–S

FEDERAL RESERVE SYSTEM

Formations of, Acquisitions by, and Mergers of Bank Holding Companies

The companies listed in this notice have applied to the Board for approval, pursuant to the Bank Holding Company Act of 1956 (12 U.S.C. 1841 *et seq.*) (BHC Act), Regulation Y (12 CFR Part 225), and all other applicable statutes and regulations to become a bank holding company and/or to acquire the assets or the ownership of, control of, or the power to vote shares of a bank or bank holding company and all of the banks and nonbanking companies owned by the bank holding company, including the companies listed below.

The applications listed below, as well as other related filings required by the Board, are available for immediate inspection at the Federal Reserve Bank indicated. The application also will be available for inspection at the offices of the Board of Governors. Interested persons may express their views in writing on the standards enumerated in the BHC Act (12 U.S.C. 1842(c)). If the proposal also involves the acquisition of a nonbanking company, the review also includes whether the acquisition of the nonbanking company complies with the standards in section 4 of the BHC Act (12 U.S.C. 1843). Unless otherwise noted, nonbanking activities will be conducted throughout the United States. Additional information on all bank holding companies may be obtained from the National Information Center website at www.ffiec.gov/nic/.

Unless otherwise noted, comments regarding each of these applications must be received at the Reserve Bank indicated or the offices of the Board of Governors not later than February 28, 2002.

A. Federal Reserve Bank of New York (Betsy Buttrill White, Senior Vice President) 33 Liberty Street, New York, New York 10045–0001:

1. United National Bancorp, Bridgewater, New Jersey; to merge with Vista Bancorp, Inc., and thereby indirectly acquire Visa Bank, N.A., both of Phillipsburg, New Jersey.

B. Federal Reserve Bank of Minneapolis (Julie Stackhouse, Vice President) 90 Hennepin Avenue, Minneapolis, Minnesota 55480–0291:

1. Border Bancshares, Inc., Greenbush, Minnesota; to acquire at least 80 percent of the voting shares of Northern Plains Bancshares, Inc., Thief River Falls, Minnesota. and thereby indirectly acquire First National Bank, Thief River Falls, Minnesota.

Board of Governors of the Federal Reserve System, January 29, 2002.

Robert deV. Frierson,

Deputy Secretary of the Board.

[FR Doc. 02–2526 Filed 1–31–02; 8:45 am]

BILLING CODE 6210–01–S

FEDERAL TRADE COMMISSION

[File No. 012 3214]

Eli Lilly and Co.; Analysis to Aid Public Comment

AGENCY: Federal Trade Commission.

ACTION: Proposed Consent Agreement.

SUMMARY: The consent agreement in this matter settles alleged violations of federal law prohibiting unfair or deceptive acts or practices or unfair methods of competition. The attached Analysis to Aid Public Comment describes both the allegations in the draft complaint that accompanies the consent agreement and the terms of the consent order—embodied in the consent agreement—that would settle these allegations.

DATES: Comments must be received on or before February 19, 2002.

ADDRESSES: Comments filed in paper form should be directed to: FTC/Office of the Secretary, Room 159–H, 600 Pennsylvania Avenue, NW., Washington, DC 20580. Comments filed in electronic form should be directed to: *consentagreement@ftc.gov,* as prescribed below.

FOR FURTHER INFORMATION CONTACT: Mary K. Engle, Division of Advertising Practices, Bureau of Consumer Protection, 600 Pennsylvania Avenue, NW., Washington, DC 20580, (202) 326–3161.

SUPPLEMENTARY INFORMATION: Pursuant to section 6(f) of the Federal Trade Commission Act, 38 Stat. 721, 15 U.S.C. 46(f), and § 2.34 of the Commission's rules of practice, 16 CFR 2.34, notice is hereby given that the above-captioned consent agreement containing a consent order to cease and desist, having been filed with and accepted, subject to final approval, by the Commission, has been placed on the public record for a period of thirty (30) days. The following Analysis to Aid Public Comment describes the terms of the consent agreement, and the allegations in the complaint. An electronic copy of the full text of the consent agreement package can be obtained from the FTC Home Page (for January 18, 2002), on the World Wide Web, at ''http://www.ftc.gov/os/2002/01/index.htm.'' A paper copy can be obtained from the FTC Public Reference Room, Room 130–H, 600 Pennsylvania Avenue, NW., Washington, DC 20580, either in person or by calling (202) 326–2222.

Public comments are invited, and may be filed with the Commission in either paper or electronic form. Comments filed in paper form should be directed to: FTC/Office of the Secretary, Room 159–H, 600 Pennsylvania Avenue, NW., Washington, DC 20580. If a comment contains nonpublic information, it must be filed in paper form, and the first page of the document must be clearly labeled ''confidential.'' Comments that do not contain any nonpublic information may instead be filed in electronic form (in ASCII format, WordPerfect, or Microsoft Word) as part of or as an attachment to e-mail messages directed to the following e-mail box: *consentagreement@ftc.gov.* Such comments will be considered by the Commission and will be available for inspection and copying at its principal office in accordance with § 4.9(b)(6)(ii) of the Commission's rules of practice, 16 CFR 4.9(b)(6)(ii)).

Analysis of Proposed Consent Order to Aid Public Comment

The Federal Trade Commission has accepted, subject to final approval, an agreement containing a consent order from Eli Lilly and Company (''Lilly'').

The proposed consent order has been placed on the public record for thirty (30) days for receipt of comments by interested persons. Comments received during this period will become part of the public record. After thirty (30) days, the Commission will again review the agreement and the comments received, and will decide whether it should withdraw from the agreement and take appropriate action or make final the agreement's proposed order.

Lilly is a pharmaceutical company that manufactures, markets, and sells drugs, including the anti-depressant medication Prozac. To market Prozac, among other things Lilly operates the Prozac.com Web site, which the company promotes as ''Your Guide to Evaluating and Recovering from Depression.'' The Prozac.com site, like Lilly.com and several of Lilly's other product Web sites, collects personal information from visitors.

From March 2000 through June 2001, Lilly offered through Prozac.com a service called ''Medi-Messenger,'' which enabled its subscribers to receive individualized email reminders from Lilly concerning their Prozac medication or other matters. On June 27, 2001, Lilly sent a form email to subscribers to the service, which disclosed all of the subscribers' email addresses to each individual subscriber by including all of their addresses within the ''To:'' entry of the message.

This matter concerns allegedly false or misleading representations, made through Lilly's privacy policies and during the sign-up process for Medi-Messenger. The Commission's proposed complaint alleges that Lilly claimed that it employs measures and takes steps appropriate under the circumstances to maintain and protect the privacy and confidentiality of personal information obtained from or about consumers through its Prozac.com and Lilly.com Web sites, when in fact Lilly had not employed such measures and had not taken such steps.

As set forth in the complaint, Lilly's unintentional June 27th disclosure of Medi-Messenger subscribers' personal information (*i.e.,* email addresses) resulted from its failure to maintain or implement internal measures appropriate under the circumstances to protect sensitive consumer information. For example, Lilly failed to provide appropriate training for its employees regarding consumer privacy and information security; failed to provide appropriate oversight and assistance for the employee who sent out the email, who had no prior experience in creating, testing, or implementing the computer program used; and failed to implement appropriate checks and controls on the process, such as reviewing the computer program with experienced personnel and pretesting the program internally before sending out the email. Lilly's failure to implement appropriate measures also violated certain of its own written policies.

The proposed consent order contains provisions designed to prevent Lilly from engaging in similar acts and practices in the future.

The proposed order applies to the collection of personal information from or about consumers in connection with the advertising, marketing, offering for sale, or sale of any pharmaceutical, medical, or other health-related product or service by Lilly's USA division.

Part I of the proposed order prohibits misrepresentations regarding the extent to which Lilly maintains and protects the privacy or confidentiality of any personally identifiable information collected from or about consumers.

Part II of the proposed order requires Lilly to implement a four-stage information security program designed to establish and maintain reasonable and appropriate administrative, technical, and physical safeguards to protect consumers' personal information against any reasonably anticipated threats or hazards to its security, confidentiality, or integrity, and to protect such information against unauthorized access, use, or disclosure. Specifically, Part II requires Lilly to:

- Designate appropriate personnel to coordinate and oversee the program;
- Identify reasonably foreseeable internal and external risks to the security, confidentiality, and integrity of personal information, including any such risks posed by lack of training, and to address these risks in each relevant area of its operations, whether performed by employees or agents, including: (i) management and training of personnel; (ii) information systems for the processing, storage, transmission, or disposal of personal information; and (iii) prevention and response to attacks, intrusions, unauthorized access, or other information systems failures;
- Conduct an annual written review by qualified persons, within ninety (90) days after the date of service of the order and yearly thereafter, which review shall monitor and document compliance with the program, evaluate the program's effectiveness, and recommend changes to it; and
- Adjust the program in light of any findings and recommendations resulting from reviews or ongoing monitoring, and in light of any material changes to Lilly's operations that affect the program.

Parts III through VI of the proposed order are reporting and compliance provisions. Part III requires Lilly's retention of materials relating to its privacy and security representations and to its compliance with the order's information security program. Part IV requires dissemination of the order now and in the future to persons with responsibilities relating to the subject matter of the order. Part V ensures notification to the FTC of changes in corporate status. Part VI mandates compliance reports, including a copy of the initial annual review required by Part II.C within one hundred and twenty (120) days after service of the order. Part VII is a provision ''sunsetting'' the order after twenty (20) years, with certain exceptions.

The purpose of this analysis is to facilitate public comment on the proposed order. It is not intended to constitute an official interpretation of the agreement and proposed order or to modify their terms in any way.

By direction of the Commission.

Donald S. Clark,

Secretary.

Concurring Statement of Commissioner Orson Swindle

I am pleased with the consent agreement that the Commission has reached with Eli Lilly and Company. Lilly's unfortunate and unintended disclosure of prescription drug users' personal information has given us all the opportunity to evaluate how to improve upon security practices for confidential information. Lilly should be respected for its long-standing efforts in development of its privacy practices, its acceptance of responsibility for the internal failures that resulted in the alleged violation of its privacy policy, and its willingness to take appropriate steps to correct those mistakes. I appreciate the company's leadership in cooperating with us to improve its security measures, and I believe the firm will fully carry out its commitments under the proposed order. Lilly's responsiveness and its efforts to improve corporate privacy practices can be a model for others to follow.

[FR Doc. 02–2435 Filed 1–31–02; 8:45 am]

BILLING CODE 6750–01–P

DEPARTMENT OF HEALTH AND HUMAN SERVICES

Office of the Secretary

Notice of Interest Rate on Overdue Debts

Section 30.13 of the Department of Health and Human Services' claims collection regulations (45 CFR part 30) provides that the Secretary shall charge an annual rate of interest as fixed by the Secretary of Treasury after taking into consideration private consumer rates of interest prevailing on the date that HHS becomes entitled to recovery. The rate generally cannot be lower than the Department of Treasury's current value of funds rate or the applicable rate determined from the ''Schedule of Certified Interest Rates with Range of Maturities.'' This rate may be revised quarterly by the Secretary of the Treasury and shall be published quarterly by the Department of Health and Human Services in **Federal Register**.

The Secretary of the Treasury has certified a rate of 12 5/8% for the quarter ended December 31, 2001. This interest rate will remain in effect until such time as the Secretary of the Treasury notifies HHS of any change.

Dated: January 24, 2002.

George Strader,

Deputy Assistant Secretary, Finance.

[FR Doc. 02–2455 Filed 1–31–02; 8:45 am]

BILLING CODE 4150–04–M

DEPARTMENT OF HEALTH AND HUMAN SERVICES

Meeting of the President's Council on Bioethics

AGENCY: President's Council on Bioethics, HHS.

ACTION: Notice of public meeting.

SUMMARY: The President's Council on Bioethics will hold its second meeting to discuss its agenda and future activities.

DATES: The meeting will take place February 13, 2002, from 8:30 am to 5:30 pm and February 14, 2002, from 8:30 am to 1:00 pm.

ADDRESSES: The meeting location is Loews L'Enfant Plaza Hotel at 480 L'Enfant Plaza, SW., Washington, DC.

FOR FURTHER INFORMATION CONTACT: Ms. Deborah McMahon, President's Council on Bioethics, Sixth Floor, 1801 Pennsylvania Avenue, NW., Washington, DC 20006. 202/296–4694.

SUPPLEMENTARY INFORMATION: The President's Council on Bioethics is a presidential advisory committee charged, among other things, with conducting fundamental inquiry into the moral and human meaning of developments in biomedical science and technology. Included in its discussions at the Council's second meeting will be the ethics of human cloning and recent National Academy of Sciences' report on cloning.

Dated: January 28, 2002.

Dean Clancy,

Executive Director, President's Council on Bioethics.

[FR Doc. 02–2430 Filed 1–31–02; 8:45 am]

BILLING CODE 4110–60–P

DEPARTMENT OF HEALTH AND HUMAN SERVICES

Office of the Secretary

Privacy Act of 1974; Revision to Existing System of Records

AGENCY: Employee Assistance Program, Office of the Assistant Secretary for Administration and Management, Office of the Secretary, HHS.

ACTION: Notice of revision of Privacy Act Systems of Records.

SUMMARY: In accordance with the Privacy Act, HHS is giving notice that it is revising one of its system of records, 09–90–0010, Employee Assistance Program, HHS/OS/ASAM. It was most recently published on March 7, 1997. The notice is being revised to modify certain procedures and update the list of system managers. Records in this system contain information on employees and their family members who have used the services of the Employee Assistance Program (EAP). It also contains information on employees and their family members from other Federal agencies that are contracting with HHS EAPs.

EFFECTIVE DATE: This revision substantially modifies the language of this system of records by adding a new routine use. In addition to the above change, some minor revisions have been made to clarify and update procedures and other information. The modified language will take effect unless comments are received that result in a different conclusion. Other aspects of this amendment are effective on February 1, 2002.

FOR FURTHER INFORMATION CONTACT: EAP Director, Office of Human Resources, Room 5–36E, 200 Independence Avenue, SW., Washington, DC 20201. Telephone number (202) 690–8229 or (202) 690–7431

SUPPLEMENTARY INFORMATION: Record destruction procedures in the previous notice were modified to reflect new legal opinions. In addition, this notice reflects reorganization in HHS and the resulting changes to the list of system managers.

The notice is published below in its entirety, as amended.

Dated: December 17, 2001.

Roy Tucker,

Acting Deputy Assistant Secretary for Human Resources.

09–90–0010

SYSTEM NAME:

Employee Assistance Program (EPA) Records, HHS/OS/ASAM/OHR.

SYSTEM LOCATION:

Offices designated to provide counseling and/or other EAP services for employees of HHS and their family members and employees of other Federal agencies contracting with HHS for EAP services and their family members. Since there are thousands of counselors available to provide EAP services, contact the appropriate system manager in Appendix 1 for more details about specific locations.

CATEGORIES OF INDIVIDUALS COVERED BY THE SYSTEM:

This system covers the records of all HHS employees and their family members using the services of the EAP. It also covers the records of other Federal employees and their family members using the EAP through a contractual agreement between HHS and their organizations. (The remainder of this notice will refer to all persons covered by the system as ''EAP client(s)''.)

CATEGORIES OF RECORDS IN THE SYSTEM:

This system contains a written or electronic record on each EAP client. These records will contain the following information: client name, date of birth, grade, job title, home address, telephone numbers, and (when appropriate) supervisor name and telephone number. The system includes records of services provided by HHS staff as well as services provided by contractors.

Certain clinical information is also normally maintained in each record including a psychosocial history, assessment of personal concerns, information regarding referrals to facilities in the community, and all intervention outcomes. It may contain correspondence with program clients, including electronic mail and word processing applications.

If the client is referred to the EAP by a supervisor due to work performance or

conduct problems or if there is another reason to be concerned about these issues, the record may contain information such as leave usage, work quality, inappropriate behavior, and reason for referral. It may also contain information about previous and on-going supervisory/organizational interventions to correct the problem.

When the client is referred to the EAP because of a positive drug or alcohol test (as required by the drug-free workplace provisions or Department of Transportation regulations), the record will also contain information about substance abuse assessment, treatment, aftercare, and substance use monitoring results.

AUTHORITY FOR MAINTENANCE OF THE SYSTEM:

5 U.S.C. 7361, 7362, 7901, 7904; 44 U.S.C. 3101.

PURPOSE(S):

The information contained in each record is a documentation of the nature and extent of the client's concerns. This information is necessary for the clinician to formulate and implement an intervention plan for resolving the concerns. When the intervention plan includes referral(s) to treatment or other facilities outside the EAP, the record also documents this referral information.

The information contained in each record is also used for monitoring the client's progress in resolving the concern(s).

Anonymous information from each record is also used to prepare statistical reports and to conduct research that helps with program management.

ROUTIEN USES OF RECORDS MAINTAINED IN THE SYSTEM, INCLUDING CATEGORIES OF USERS AND THE PURPOSES OF SUCH USES:

(1) HHS may transfer records to contractors (e.g. private organization, individual, or other group such as an EAP consortium) for the purpose of providing EAP services for HHS employees and their family members and/or for employees of other Federal agencies and their family members.

(2) HHS may transfer records to contractors or employees of other Federal agencies for the purpose of destroying records at the end of the required period of maintenance, but only in accordance with contracts and inter-agency agreements requiring that:

(A) A witness trained in the proper handling of confidential records will be present when any records are destroyed,

(B) Records will be destroyed by shredding or burning,

(C) Records stored on hard drives will be destroyed using software tools which ensure the protection of the confidential information by making reconstruction or compromise by reuse impracticable, and

(D) Records located away from the destruction site shall be transferred to the destruction site in a confidential manner.

(3) HHS may disclose information from this system of records for litigation purposes when

(A) HHS, or any of its components, or

(B) Any HHS employee in his or her official capacity, or

(C) Any HHS employee in his or her individual capacity where the Department of Justice (or HHS, where it is authorized to do so) has agreed to represent the employee, or

(D) The United States or any agency thereof where HHS determines that the litigation is likely to affect HHS or any of its components is a party to litigation, and HHS determines that such use of records is relevant and necessary to the litigation and would help in the effective representation of the government party. The disclosure may be made to the Department of Justice. Except where the records are covered by the Confidentiality of Alcohol and Drug Abuse Patient Records regulations, 42 CFR Part 2, the disclosure may be made to a court or other tribunal, or to another party before such tribunal. Any disclosure of records covered by 42 CFR Part 2 must be pursuant to a qualified service organization agreement that meets the requirements of that part *and* must also comply with all other aspects of those regulations. The EAP Director (in ASAM) must personally approve any disclosure made under this routine use based on his or her determination that it is compatible with the purpose for which the records were collected.

(4) Records may be disclosed to student volunteers, individuals working under a personal services contract, and other individuals performing functions for the Department but technically not having the status of agency employees, if they need access to the records in order to perform their assigned agency functions.

Addendum: HHS may release statistical data (non-personal identifiers) derived from these records.

POLICIES AND PRACTICES FOR STORING, RETRIEVING, ACCESSING, RETAINING AND DISPOSING OF RECORDS IN THE SYSTEM:

STORAGE:

Records are stored in written folders, computers, and on index type cards. They are stored according to a number of physical safeguards described below.

RETRIEVABILITY:

Records are retrieved by a case code number, unique to the client utilizing the program. these numbers are cross-indexed by name.

SAFEGUARDS:

(1) *Authorized Users:* Access to these records is limited to EAP Administrators who work directly with clients of the program and their immediate staffs (including counselors, secretaries, and contract or consortia administrators, counselors or secretaries). HHS EAP Administrators and HHS EAP headquarters staff in OS/ASAM/OHR, as well as EAP Administrators and Coordinators from other Federal agencies who contract with HHS, whether or not they directly provide clinical services, may have access to the records for the purposes of program evaluation, destroying records at the end of the period of maintenance, and transferring records from one contractor to another. HHS may also contract with either a private organization or other Federal agency to destroy these records. The personnel of these record destruction organizations or agencies may have access to the records at the end of their period of maintenance for the purpose of transferring records from the EAP office to a destruction site and subsequently destroying the records.

(2) *Physical Safeguards:* All paper records are stored in metal filing cabinets equipped with at least combination locks and preferably locking crash bars. These file cabinets are in secured areas, accessible only to the EAP staff outlined above, and are locked when not in use. These records are always maintained separate from other systems of record. Computer containing records are discrete from other computer systems and/or are password protected. Computers are also stored in secured areas, accessible only to the EAP staff outlined above.

(3) *Procedural Safeguards:* All persons having access to these records shall already have been trained in the proper handling of records covered by the Privacy Act and 42 CFR Part 2 (Confidentiality of Alcohol and Drug Abuse Patient Records). These acts restrict disclosures to unique situations, such as threats of physical harm, medical emergencies, and suspected child abuse, except where the client has consented in writing to such disclosure. Clients of the EAP will be informed in writing of the confidentiality provisions. Secondary disclosure of released information is prohibited without client consent.

RETENTION AND DISPOSAL:

Records are retained until three years after the client has ceased contact with the EAP or until any litigation is finally resolved. This will be true whether or not the client has terminated employment with HHS or another agency contracting with HSS for EAP services. Individual states may require longer retention. The rules in this system notice should not be construed to authorize any violation of such state laws that have greater restrictions.

Some HHS EAPs provide Substance Abuse Professional evaluations as part of Department of Transportation regulations. These records will be retained for five years after contact with the program has ceased or any litigation is completed. Individual states may require longer retention. The rules in this system notice should not be construed to authorize any violation of such state laws that have greater restrictions.

Files will be destroyed only after the required period of maintenance, with a witness present, by either (1) an HHS EAP Administrator or an EAP Administrator from another organization that contracts with HHS for EAP services, or (2) by designated staff of a private or governmental organization under contract with HHS to provide document destruction services. The witness must be trained in the proper handling of records covered by the Privacy Act and 42 CFR part 2.

Written records will be destroyed by shredding or burning. Records stored on hard drives will be destroyed using software tools which ensure the protection of the confidential information by making reconstruction or compromise by reuse impracticable. Records contained on back-up tapes/diskettes will be disposed by either physically destroying the tapes/diskettes or be deleting them using software tools which ensure the protection of the confidential information by making reconstruction or compromise by reuse impracticable.

Records located away from the destruction site shall be transferred to the destruction site in the confidential manner required by HHS and GSA policies. The name and case coding number of the destroyed record will be maintained on a list of other destroyed records. No other information about EAP clients may be maintained once these files have been destroyed.

SYSTEM MANAGERS AND ADDRESSES:

The EAP records of HHS employees and their family members are managed by the EAP Administrators in the various regional and headquarters offices (Appendix 1). The EAP records of employees from other organizations contracting with HHS and their family members are managed by EAP administrators designated in their agreements with HHS.

NOTIFICATION PROCEDURES:

If an HHS employee and/or family member wishes to inquire about his or her record, a written inquiry should be addressed to the HHS system manager, responsible for the area where the counseling was provided (see Appendix 1). The individual should provide his or her name, organization where employed, date of birth, location of counseling, and approximate date of counseling. If a third party is making the request, a written consent from the client must accompany the request.

If an inquiry is made from an employee and/or family member from another Federal agency serviced by the HHS EAP, a written inquiry shall be made using the same procedures described above. It should be addressed to the HHS contact person found in Appendix A. If the contract to obtain services from HHS has terminated, the request should be made through the designated EAP representative at the other Federal agency.

In some limited situations, an EAP record is considered a medical record. A client requesting notification or access to a medical record shall, at the time the request is made, designate in writing a responsible individual who would be willing to review the record. Upon receiving a request, the EAP system manager shall weigh the need for disclosure against the potential injury to the EAP client, to other affected persons, to the physician-patient relationship, and to the treatment services. The EAP manager will then determine whether to disclose the record directly to the client or to the designated individual. If disclosed to the designated individual, he or she will inform the client of its content but only at his or her discretion.

RECORD ACCESS PROCEDURES:

Same as notification procedures. Requestors should also reasonably specify the record contents being sought.

CONTESTING RECORD PROCEDURES:

Contact the EAP Administrator at the address found in Appendix 1, and reasonably identify the record and specify the information to be contested. State the corrective action sought and the reasons for the correction.

RECORD SOURCE CATEGORIES:

Information in this system of records is: (1) Supplied directly by the individual using the program, or (2) supplied by a member of the employee's family, or (3) derived from information supplied by the employee, or (4) supplied by sources to/from whom the individual has been referred for assistance, or (5) supplied by Department officials (including drug testing officers), or (6) supplied by EAP counselors, or (7) supplied by other sources involved with the case.

SYSTEMS EXEMPTED FROM CERTAIN PROVISIONS OF THE ACT:

None.

Appendix 1

All HHS Regional Offices and Those in the Rockville, MD; Hyattsville, MD; and College Park, MD Areas

(except those listed below) and any other office not listed here

Employee Assistance Program Director, Office of the Secretary, ASAM, 200 Independence Avenue, SW., Room 5–36E, Washington, DC 20201.

Centers for Disease Control and Prevention

(offices in the Atlanta, GA area)

CDC Employee Assistance Program Administrator, Personnel Management Office, 1600 Clifton Road, NE., Mail Stop F05, Atlanta, GA 30333.

Southwest DC Complex

Employee Assistance Program Administrator, Program Support Center, 330 C Street, SW., Room 1250, Washington, DC 20201.

Centers for Medicare and Medicaid Services

(all locations)

HCFA Employee Assistance Program Administrator, 7500 Security Boulevard, S1–23–27, Baltimore, MD 21244.

National Institutes of Health

(headquarters location)

NIH Employee Assistance Program Administrator, Building 31, Room 1C02, 9000 Rockville Pike, Bethesda, MD 20892.

All Other Organizations Contracting With HHS

Program Support Center, Federal Occupational Health, Employee Assistance Program, Two Illinois Center, 233 North Michigan Avenue, Suite 270, Chicago, IL 60601–5519.

[FR Doc. 02–2456 Filed 1–31–02; 8:45 am]

BILLING CODE 41550–04–M

DEPARTMENT OF HEALTH AND HUMAN SERVICES

Office for Civil Rights; Title VI of the Civil Rights Act of 1964; Policy Guidance on the Prohibition Against National Origin Discrimination as It Affects Persons With Limited English Proficiency

AGENCY: Office for Civil Rights (OCR), HHS.

ACTION: Notice of republication of policy guidance with request for comment.

SUMMARY: The United States Department of Health and Human Services (HHS) is republishing for comment policy guidance on Title VI's prohibition against national origin discrimination as it affects limited English proficient (LEP) persons.

DATES: The guidance was effective August 30, 2000. Comments must be submitted on or before April 2, 2002. OCR will review all comments and will determine what modifications to the policy guidance, if any, are necessary.

ADDRESSES: Comments should be addressed to Deeana Jang with ''Attention: LEP Comments,'' and should be sent to 200 Independence Avenue, SW. Room 506F, Washington, DC 20201. Comments may also be submitted by e-mail at *LEP.comments@hhs.gov.*

FOR FURTHER INFORMATION CONTACT: Deeana Jang or Ronald Copeland at the Office for Civil Rights, Room 506F, U.S. Department of Health and Human Services, 200 Independence Avenue, SW., Washington, DC 20201, addressed with ''Attention: LEP Comments;'' telephone toll-free number: 1–866–OCR–7748, or 202–619–0553; TDD: toll-free 1–800–537–7697. Arrangements to receive the policy in an alternative format may be made by contacting the named individuals.

SUPPLEMENTARY INFORMATION: The United States Department of Health and Human Services (HHS) is republishing for comment the policy guidance, ''Title VI Prohibition Against National Origin Discrimination As It Affects Persons With Limited English Proficiency'' (the ''guidance''). This guidance was originally published on August 30, 2000, and included a 60-day comment period. 65 FR 52762. However, pursuant to a memorandum issued by the United States Department of Justice on October 26, 2001, HHS is republishing this guidance and inviting public comment on the guidance. The United States Department of Justice memorandum is attached and can be found at: *http://www.usdoj.gov/crt/cor/lep/Oct26Memorandum.htm.*

The Secretary is interested in comments on all aspects of the guidance, including comments on the issues listed below. If you are raising a concern, please be as specific as possible.

(1) Have persons with limited English proficiency seeking health care or social services benefitted as a result of the guidance? If so, what have been the benefits? Please be specific about your experiences.

(2) Have persons with limited English proficiency faced challenges or problems in accessing health care or social services following issuance of the guidance? If so, what have been the challenges or problems? Please be specific about your experiences.

(3) Have health care or social services providers faced challenges or problems in providing these services to persons with limited English proficiency as a result of the guidance? If so, what have been the challenges or problems? Please be specific about your experiences. The Secretary is particularly interested in the experiences of small providers.

(4) Are there areas of the guidance that you believe need to be clarified or modified? If so, please explain what areas, why the area(s) need clarification or modification, and provide any suggestions for clarification or modification.

(5) Has the guidance been effective in identifying reasonable ways of providing services to individuals with limited English proficiency? What are some of the cost-effective ways that are used successfully to provide services for persons with limited English proficiency that are not included in the guidance? Again, the Secretary is particularly interested in the experiences of small providers.

(6) What technical assistance from the Office for Civil Rights (OCR) and other components of HHS would be most helpful to recipients/covered entities?

(7) In providing services to persons with limited English proficiency, what costs have health care or social services providers incurred in providing translation, interpreter, or other language services? Please be specific about your experiences. The Secretary is particularly interested in the experiences of small providers. If health care or social services providers have not yet provided translation, interpreter or other language services for persons with limited English proficiency, what costs are anticipated? Please provide the basis for your estimate.

(8) Some may assert that the guidance has materially assisted in achieving the goal of access to health or social services by limited English proficient individuals. Others may assert that the guidance has unintentionally had the opposite effect. Is there actual experience to support either view? Please describe.

(9) Based on your experience, does the guidance and/or OCR's application of the guidance in practice, strike the right balance with respect to the factors enunciated in the Department of Justice's October 26, 2001 memorandum: (1) The number or proportion of limited English proficient persons, (2) the frequency of contact with the program, (3) the nature and importance of the program, and (4) the resources available? Please note that these factors are discussed in greater detail in the Department of Justice memorandum. In particular, in considering the resources available, does the guidance and/or OCR's application of the guidance adequately factor in the costs of providing translation, interpreter or other language services to limited English proficient individuals, as well as the resources available to the recipient/covered entity?

The Department welcomes comments from the public on these and any other issues related to the guidance. Even if you have commented before on the guidance, you may have additional comments. In accordance with the instructions from the Department of Justice, the Department will review the guidance in light of the public comments received and the Department of Justice memorandum, and will determine what modifications to the guidance, if any, are necessary.

The text of the complete guidance document, including appendices, appears below.

Dated: January 28, 2002.

Robinsue Frohboese,

Principal Deputy and Acting Director, Office for Civil Rights.

Policy Guidance—Title VI Prohibition Against National Origin Discrimination as It Affects Persons With Limited English Proficiency

A. Background

English is the predominant language of the United States. According to the 1990 Census, English is spoken by 95% of its residents. Of those U.S. residents who speak languages other than English at home, the 1990 Census reports that 57% above the age of four speak English ''well to very well.''

The United States is also, however, home to millions of national origin minority individuals who are ''limited

English proficient'' (LEP). That is, they cannot speak, read, write or understand the English language at a level that permits them to interact effectively with health care providers and social service agencies. Because of these language differences and their inability to speak or understand English, LEP persons are often excluded from programs, experience delays or denials of services, or receive care and services based on inaccurate or incomplete information.

In the course of its enforcement activities, OCR has found that persons who lack proficiency in English frequently are unable to obtain basic knowledge of how to access various benefits and services for which they are eligible, such as the State Children's Health Insurance Program (SCHIP), Medicare, Medicaid or Temporary Assistance to Needy Families (TANF) benefits, clinical research programs, or basic health care and social services. For example, many intake interviewers and other front line employees who interact with LEP individuals are neither bilingual nor trained in how to properly serve an LEP person. As a result, the LEP applicant all too often is either turned away, forced to wait for substantial periods of time, forced to find his/her own interpreter who often is not qualified to interpret, or forced to make repeated visits to the provider's office until an interpreter is available to assist in conducting the interview.

The lack of language assistance capability among provider agency employees has especially adverse consequences in the area of professional staff services, such as health services. Doctors, nurses, social workers, psychologists, and other professionals provide vitally important services whose very nature requires the establishment of a close relationship with the client or patient that is based on empathy, confidence and mutual trust. Such intimate personal relationships depend heavily on the free flow of communication between professional and client. This essential exchange of information is difficult when the two parties involved speak different languages; it may be impeded further by the presence of an unqualified third person who attempts to serve as an interpreter.

Some health and social service providers have sought to bridge the language gap by encouraging language minority clients to provide their own interpreters as an alternative to the agency's use of qualified bilingual employees or interpreters. Persons of limited English proficiency must sometimes rely on their minor children to interpret for them during visits to a health or social service facility. Alternatively, these clients may be required to call upon neighbors or even strangers they encounter at the provider's office to act as interpreters or translators.

These practices have severe drawbacks and may violate Title VI of the Civil Rights Act of 1964. In each case, the impediments to effective communication and adequate service are formidable. The client's untrained ''interpreter'' is often unable to understand the concepts or official terminology he or she is being asked to interpret or translate. Even if the interpreter possesses the necessary language and comprehension skills, his or her mere presence may obstruct the flow of confidential information to the provider. This is because the client would naturally be reluctant to disclose or discuss intimate details of personal and family life in front of the client's child or a complete stranger who has no formal training or obligation to observe confidentiality.

When these types of circumstances are encountered, the level and quality of health and social services available to persons of limited English proficiency stand in stark conflict to Title VI's promise of equal access to federally assisted programs and activities. Services denied, delayed or provided under adverse circumstances have serious and sometimes life threatening consequences for an LEP person and generally will constitute discrimination on the basis of national origin, in violation of Title VI. Accommodation of these language differences through the provision of effective language assistance will promote compliance with Title VI. Moreover, by ensuring accurate client histories, better understanding of exit and discharge instructions, and better assurances of informed consent, providers will better protect themselves against tort liability, malpractice lawsuits, and charges of negligence.

Although OCR's enforcement authority derives from Title VI, the duty of health and human service providers to ensure that LEP persons can meaningfully access programs and services flows from a host of additional sources, including federal and state laws and regulations, managed care contracts, and health care accreditation organizations.[1] In addition, the duty to provide appropriate language assistance to LEP individuals is not limited to the health and human service context. Numerous federal laws require the provision of language assistance to LEP individuals seeking to access critical services and activities. For instance, the Voting Rights Act bans English-only elections in certain circumstances and outlines specific measures that must be taken to ensure that language minorities can participate in elections. *See* 42 U.S.C. Section 1973 b(f)(1). Similarly, the Food Stamp Act of 1977 requires states to provide written and oral language assistance to LEP persons under certain circumstances. 42 U.S.C. Section 2020(e)(1) and (2). These and other provisions reflect the sound judgment that providers of critical services and benefits bear the responsibility for ensuring that LEP individuals can meaningfully access their programs and services.

OCR issued internal guidance to its staff in January 1998 on a recipient's obligation to provide language assistance to LEP persons. That guidance was intended to ensure consistency in OCR's investigation of LEP cases. This current guidance clarifies for recipient/covered entities and the public, the legal requirements under Title VI that OCR has been enforcing for the past 30 years.

This policy guidance is consistent with a Department of Justice (DOJ) directive noting that recipient/covered entities have an obligation pursuant to Title VI's prohibition against national origin discrimination to provide oral and written language assistance to LEP persons.[2] It is also consistent with a government-wide Title VI regulation issued by DOJ in 1976, ''Coordination of Enforcement of Nondiscrimination in Federally Assisted Programs,'' 28 CFR part 42, subpart F, that addresses the circumstances in which recipient/covered entities must provide written language assistance to LEP persons.[3]

B. Legal Authority

1. Introduction

Over the last 30 years, OCR has conducted thousands of investigations and reviews involving language

[1] A description of these requirements is included as Appendix B to this policy guidance.

[2] The DOJ directive has been issued contemporaneously with this policy guidance.

[3] The DOJ coordination regulations at 28 CFR Section 42.405(d)(1) provide that ''[w]here a significant number or proportion of the population eligible to be served or likely to be directly affected by a federally assisted program (e.g., affected by relocation) needs service or information in a language other than English in order effectively to be informed of or to participate in the program, the recipient shall take reasonable steps, considering the scope of the program and the size and concentration of such population, to provide information in appropriate languages to such persons. This requirement applies with regard to written material of the type which is ordinarily distributed to the public.''

differences that impede the access of LEP persons to medical care and social services. Where the failure to accommodate language differences discriminates on the basis of national origin, OCR has required recipient/covered entities to provide appropriate language assistance to LEP persons. For instance, OCR has entered into voluntary compliance agreements and consent decrees that require recipients who operate health and social service programs to ensure that there are bilingual employees or language interpreters to meet the needs of LEP persons seeking services. OCR has also required these recipient/covered entities to provide written materials and post notices in languages other than English. *See Mendoza* v. *Lavine,* 412 F.Supp. 1105 (S.D.N.Y. 1976); and *Asociacion Mixta Progresista* v. *H.E.W.,* Civil Number C72–882 (N.D. Cal. 1976). The legal authority for OCR's enforcement actions is Title VI of the Civil Rights Act of 1964, the implementing regulations, and a consistent body of case law. The legal authority is described below.

2. Statute and Regulation

Section 601 of Title VI of the Civil Rights Act of 1964, 42 U.S.C. Section 2000d *et. seq.* states: ''No person in the United States shall on the ground of race, color or national origin, be excluded from participation in, be denied the benefits of, or be subjected to discrimination under any program or activity receiving Federal financial assistance.'' Regulations implementing Title VI, provide in part at 45 CFR Section 80.3 (b):

(1) A recipient under any program to which this part applies may not, directly or through contractual or other arrangements, on ground of race, color, or national origin:

(i) Deny an individual any service, financial aid, or other benefit provided under the program;

(ii) Provide any service, financial aid, or other benefit to an individual which is different, or is provided in a different manner, from that provided to others under the program;

(2) A recipient, in determining the types of services, financial aid, or other benefits, or facilities which will be provided under any such program or the class of individuals to whom, or the situations in which such services, financial aid or other benefits, or facilities will be provided * * * *may not directly, or through contractual or other arrangements, utilize criteria or methods of administration which have the effect of subjecting individuals to discrimination, because of their race, color or national origin, or have the effect of defeating or substantially impairing accomplishment of the objectives of the program with respect to individuals of a particular race, color or national origin.* (emphasis added).

3. Case Law

Extensive case law affirms the obligation of recipients of federal financial assistance to ensure that LEP persons can meaningfully access federal-assisted programs.

The U.S. Supreme Court, in *Lau* v. *Nichols,* 414 U.S. 563 (1974), recognized that recipients of Federal financial assistance have an affirmative responsibility, pursuant to Title VI, to provide LEP persons with meaningful opportunity to participate in public programs. In *Lau* v. *Nichols,* the Supreme Court ruled that a public school system's failure to provide English language instruction to students of Chinese ancestry who do not speak English denied the students a meaningful opportunity to participate in a public educational program in violation of Title VI of the Civil Rights Act of 1964.

The *Lau* decision affirmed the U.S. Department of Health, Education and Welfare's Policy Memorandum issued on May 25, 1970, titled ''Identification of Discrimination and the Denial of Services on the Basis of National Origin,'' 35 FR 11,595. The memorandum states in part: ''Where the inability to speak and understand the English language excludes national origin minority group children from effective participation in the educational program offered by a school district, the district must take affirmative steps to rectify the language deficiency in order to open its instructional program to these students.''

As early as 1926, the Supreme Court recognized that language rules were often discriminatory. In *Yu Cong Eng et.al.* v. *Trinidad, Collector of Internal Revenue,* 271 U.S. 500 (1926), the Supreme Court found that a Philippine Bookkeeping Act that prohibited the keeping of accounts in languages other than English, Spanish and Philippine dialects violated the Philippine Bill of Rights that Congress had patterned after the U.S. Constitution. The Court found that the Act deprived Chinese merchants, who were unable to read, write or understand the required languages, of liberty and property without due process.

In *Gutierrez* v. *Municipal Court of S.E. Judicial District,* 838 F.2d 1031,1039 (9th Cir. 1988), *vacated as moot,* 490 U.S. 1016 (1989), the court recognized that requiring the use of English only is often used to mask national origin discrimination. Citing McArthur, *Worried About Something Else,* 60 Int'l J. Soc. Language, 87, 90–91 (1986), the court stated that because language and accents are identifying characteristics, rules that have a negative effect on bilingual persons, individuals with accents, or non-English speakers may be mere pretexts for intentional national origin discrimination.

Another case that noted the link between language and national origin discrimination is *Garcia* v. *Gloor,* 618 F.2d 264 (5th Cir. 1980) *cert. denied,* 449 U.S. 1113 (1981). The court found that on the facts before it a workplace English-only rule did not discriminate on the basis of national origin since the complaining employees were bilingual. However, the court stated that ''to a person who speaks only one tongue or to a person who has difficulty using another language other than the one spoken in his home, language might well be an immutable characteristic like skin color, sex or place of birth.'' *Id.* At 269.

The Fifth Circuit addressed language as an impermissible barrier to participation in society in *U.S.* v. *Uvalde Consolidated Independent School District,* 625 F2d 547 (5th Cir. 1980). The court upheld an amendment to the Voting Rights Act which addressed concerns about language minorities, the protections they were to receive, and eliminated discrimination against them by prohibiting English-only elections.

Most recently, the Eleventh Circuit in *Sandoval* v. *Hagan,* 197 F. 3d 484 (11th Cir. 1999), *petition for cert. filed,* May 30, 2000, held that the State of Alabama's policy of administering a driver's license examination in English only was a facially neutral practice that had an adverse effect on the basis of national origin, in violation of Title VI. The court specifically noted the nexus between language policies and potential discrimination based on national origin. That is, in *Sandoval,* the vast majority of individuals who were adversely affected by Alabama's English-only driver's license examination policy were national origin minorities.

In the health and human service context, a recipient's failure to provide appropriate language assistance to LEP individuals parallels many of the fact situations discussed in the cases above and, as in those cases, may have an adverse effect on the basis of national origin, in violation of Title VI.

The Title VI regulations prohibit both intentional discrimination and policies and practices that appear neutral but have a discriminatory effect. Thus, a recipient/covered entity's policies or practices regarding the provision of benefits and services to LEP persons need not be intentional to be discriminatory, but may constitute a

violation of Title VI if they have an adverse effect on the ability of national origin minorities to meaningfully access programs and services. Accordingly, it is useful for recipient/covered entities to examine their policies and practices to determine whether they adversely affect LEP persons. This policy guidance provides a legal framework to assist recipient/covered entities in conducting such assessments.

C. Policy Guidance

1. Who Is Covered

All entities that receive Federal financial assistance from HHS, either directly or indirectly, through a grant, contract or subcontract, are covered by this policy guidance. Covered entities include (1) any state or local agency, private institution or organization, or any public or private individual that (2) operates, provides or engages in health, or social service programs and activities and that (3) receives federal financial assistance from HHS directly or through another recipient/covered entity. Examples of covered entities include but are not limited to hospitals, nursing homes, home health agencies, managed care organizations, universities and other entities with health or social service research programs, state, county and local health agencies, state Medicaid agencies, state, county and local welfare agencies, programs for families, youth and children, Head Start programs, public and private contractors, subcontractors and vendors, physicians, and other providers who receive Federal financial assistance from HHS.

The term Federal financial assistance to which Title VI applies includes but is not limited to grants and loans of Federal funds, grants or donations of Federal property, details of Federal personnel, or any agreement, arrangement or other contract which has as one of its purposes the provision of assistance. (*See,* 45 CFR section 80.13(f); and appendix A to the Title VI regulations, 45 CFR part 80, for additional discussion of what constitutes Federal financial assistance).

Title VI prohibits discrimination in any program or activity that receives Federal financial assistance. What constitutes a program or activity covered by Title VI was clarified by Congress in 1988, when the Civil Rights Restoration Act of 1987 (CRRA) was enacted. The CRRA provides that, in most cases, when a recipient/covered entity receives Federal financial assistance for a particular program or activity, all operations of the recipient/covered entity are covered by Title VI, not just the part of the program that uses the Federal assistance. Thus, all parts of the recipient's operations would be covered by Title VI, even if the Federal assistance is used only by one part.

2. Basic Requirements Under Title VI

A recipient/covered entity whose policies, practices or procedures exclude, limit, or have the effect of excluding or limiting, the participation of any LEP person in a federally-assisted program on the basis of national origin may be engaged in discrimination in violation of Title VI. In order to ensure compliance with Title VI, recipient/covered entities must take steps to ensure that LEP persons who are eligible for their programs or services have meaningful access to the health and social service benefits that they provide. The most important step in meeting this obligation is for recipients of Federal financial assistance such as grants, contracts, and subcontracts to provide the language assistance necessary to ensure such access, at no cost to the LEP person.

The type of language assistance a recipient/covered entity provides to ensure meaningful access will depend on a variety of factors, including the size of the recipient/covered entity, the size of the eligible LEP population it serves, the nature of the program or service, the objectives of the program, the total resources available to the recipient/covered entity, the frequency with which particular languages are encountered, and the frequency with which LEP persons come into contact with the program. There is no ''one size fits all'' solution for Title VI compliance with respect to LEP persons. OCR will make its assessment of the language assistance needed to ensure meaningful access on a case by case basis, and a recipient/covered entity will have considerable flexibility in determining precisely how to fulfill this obligation. OCR will focus on the end result—whether the recipient/covered entity has taken the necessary steps to ensure that LEP persons have meaningful access to its programs and services.

The key to providing meaningful access for LEP persons is to ensure that the recipient/covered entity and LEP person can communicate effectively. The steps taken by a covered entity must ensure that the LEP person is given adequate information, is able to understand the services and benefits available, and is able to receive those for which he or she is eligible. The covered entity must also ensure that the LEP person can effectively communicate the relevant circumstances of his or her situation to the service provider.

In enforcing Title VI and its application to LEP persons over the last 30 years, OCR has found that effective language assistance programs usually contain the four elements described in section three below. In reviewing complaints and conducting compliance reviews, OCR will consider a program to be in compliance when the recipient/covered entity effectively incorporates and implements these four elements. The failure to incorporate or implement one or more of these elements does not necessarily mean noncompliance with Title VI, and OCR will review the totality of the circumstances to determine whether LEP persons can meaningfully access the services and benefits of the recipient/covered entity.

3. Ensuring Meaningful Access to LEP Persons

(a) Introduction—The Four Keys to Title VI Compliance in the LEP Context

The key to providing meaningful access to benefits and services for LEP persons is to ensure that the language assistance provided results in accurate and effective communication between the provider and LEP applicant/client about the types of services and/or benefits available and about the applicant's or client's circumstances. Although HHS recipients have considerable flexibility in fulfilling this obligation, OCR has found that effective programs usually have the following four elements:

—Assessment—The recipient/covered entity conducts a thorough assessment of the language needs of the population to be served;
—Development of Comprehensive Written Policy on Language Access—The recipient/covered entity develops and implements a comprehensive written policy that will ensure meaningful communication;
—Training of Staff—The recipient/covered entity takes steps to ensure that staff understands the policy and is capable of carrying it out; and
—Vigilant Monitoring—The recipient/covered entity conducts regular oversight of the language assistance program to ensure that LEP persons meaningfully access the program.

The failure to implement one or more of these measures does not necessarily mean noncompliance with Title VI, and OCR will review the totality of the circumstances in each case. If implementation of one or more of these options would be so financially burdensome as to defeat the legitimate objectives of a recipient/covered entity's program, or if there are equally effective alternatives for ensuring that LEP

persons have meaningful access to programs and services, OCR will not find the recipient/covered entity in noncompliance.

(b) Assessment

The first key to ensuring meaningful access is for the recipient/covered entity to assess the language needs of the affected population. A recipient/covered entity assesses language needs by:

- Identifying the non-English languages that are likely to be encountered in its program and by estimating the number of LEP persons that are eligible for services and that are likely to be directly affected by its program. This can be done by reviewing census data, client utilization data from client files, and data from school systems and community agencies and organizations;
- Identifying the language needs of each LEP patient/client and recording this information in the client's file;
- Identifying the points of contact in the program or activity where language assistance is likely to be needed;
- Identifying the resources that will be needed to provide effective language assistance;
- Identifying the location and availability of these resources; and
- Identifying the arrangements that must be made to access these resources in a timely fashion.

(c) Development of Comprehensive Written Policy on Language Access

A recipient/covered entity can ensure effective communication by developing and implementing a comprehensive written language assistance program that includes policies and procedures for identifying and assessing the language needs of its LEP applicants/clients, and that provides for a range of oral language assistance options, notice to LEP persons in a language they can understand of the right to free language assistance, periodic training of staff, monitoring of the program, and translation of written materials in certain circumstances.[4]

(1) *Oral Language Interpretation*— In designing an effective language assistance program, a recipient/covered entity develops procedures for obtaining and providing trained and competent interpreters and other oral language assistance services, in a timely manner, by taking some or all of the following steps:

- Hiring bilingual staff who are trained and competent in the skill of interpreting;
- Hiring staff interpreters who are trained and competent in the skill of interpreting;
- Contracting with an outside interpreter service for trained and competent interpreters;
- Arranging formally for the services of voluntary community interpreters who are trained and competent in the skill of interpreting;
- Arranging/contracting for the use of a telephone language interpreter service. See Section 3(e)(2) for a discussion on ''Competence of Interpreters.''

The following provides guidance to recipient/covered entities in determining which language assistance options will be of sufficient quantity and quality to meet the needs of their LEP beneficiaries:

Bilingual Staff—Hiring bilingual staff for patient and client contact positions facilitates participation by LEP persons. However, where there are a variety of LEP language groups in a recipient's service area, this option may be insufficient to meet the needs of all LEP applicants and clients. Where this option is insufficient to meet the needs, the recipient/covered entity must provide additional and timely language assistance. Bilingual staff must be trained and must demonstrate competence as interpreters.

Staff Interpreters—Paid staff interpreters are especially appropriate where there is a frequent and/or regular need for interpreting services. These persons must be competent and readily available.

Contract Interpreters—The use of contract interpreters may be an option for recipient/covered entities that have an infrequent need for interpreting services, have less common LEP language groups in their service areas, or need to supplement their in-house capabilities on an as-needed basis. Such contract interpreters must be readily available and competent.

Community Volunteers—Use of community volunteers may provide recipient/covered entities with a cost-effective method for providing interpreter services. However, experience has shown that to use community volunteers effectively, recipient/covered entities must ensure that formal arrangements for interpreting services are made with community organizations so that these organizations are not subjected to *ad hoc* requests for assistance. In addition, recipient/covered entities must ensure that these volunteers are competent as interpreters and understand their obligation to maintain client confidentiality. Additional language assistance must be provided where competent volunteers are not readily available during all hours of service.

Telephone Interpreter Lines—A telephone interpreter service line may be a useful option as a supplemental system, or may be useful when a recipient/covered entity encounters a language that it cannot otherwise accommodate. Such a service often offers interpreting assistance in many different languages and usually can provide the service in quick response to a request. However, recipient/covered entities should be aware that such services may not always have readily available interpreters who are familiar with the terminology peculiar to the particular program or service. It is important that a recipient/covered entity not offer this as the only language assistance option except where other language assistance options are unavailable (*e.g.,* in a rural clinic visited by an LEP patient who speaks a language that is not usually encountered in the area).

(2) *Translation of Written Materials*— An effective language assistance program ensures that written materials that are routinely provided in English to applicants, clients and the public are available in regularly encountered languages other than English. It is particularly important to ensure that vital documents, such as applications, consent forms, letters containing important information regarding participation in a program (such as a cover letter outlining conditions of participation in a Medicaid managed care program), notices pertaining to the reduction, denial or termination of services or benefits, of the right to appeal such actions or that require a response from beneficiaries, notices advising LEP persons of the availability of free language assistance, and other outreach materials be translated into the non-English language of each regularly encountered LEP group eligible to be served or likely to be directly affected by the recipient/covered entity's program. However, OCR recognizes that each federally-funded health and social service program has unique characteristics. Therefore, OCR will collaborate with respective HHS agencies in determining which documents and information are deemed to be vital.

[4] The Americans with Disabilities Act and Section 504 of the Rehabilitation Act of 1973 both provide similar prohibitions against discrimination on the basis of disability and reqwuire entities to provide language assistance such as sign language interpreters for hearing impaired individuals or alternative formats such as braille, large print or tape for vision impaired individuals. In developing a comprehensive language assistance program, recipient/covered entities should be mindful of their responsibilities under the ADA and Section 504 to ensure access to programs for individuals with disabilities.

As part of its overall language assistance program, a recipient must develop and implement a plan to provide written materials in languages other than English where a significant number or percentage of the population eligible to be served or likely to be directly affected by the program needs services or information in a language other than English to communicate effectively. 28 CFR Section 42.405(d)(1). OCR will determine the extent of the recipient/covered entity's obligation to provide written translation of documents on a case by case basis, taking into account all relevant circumstances, including the nature of the recipient/covered entity's services or benefits, the size of the recipient/covered entity, the number and size of the LEP language groups in its service area, the nature and length of the document, the objectives of the program, the total resources available to the recipient/covered entity, the frequency with which translated documents are needed, and the cost of translation.

One way for a recipient/covered entity to know with greater certainty that it will be found in compliance with its obligation to provide written translations in languages other than English is for the recipient/covered entity to meet the guidelines outlined in paragraphs (A) and (B) below.

Paragraphs (A) and (B) outline the circumstances that provide a ''safe harbor'' for recipient/covered entities. A recipient/covered entity that provides written translations under these circumstances can be confident that it will be found in compliance with its obligation under Title VI regarding written translations.[5] However, the failure to provide written translations under these circumstances outlined in paragraphs (A) and (B) will not necessarily mean noncompliance with Title VI.

In such circumstances, OCR will review the totality of the circumstances to determine the precise nature of a recipient/covered entity's obligation to provide written materials in languages other than English. If written translation of a certain document or set of documents would be so financially burdensome as to defeat the legitimate objectives of its program, or if there is an alternative means of ensuring that LEP persons have meaningful access to the information provided in the document (such as timely, effective oral interpretation of vital documents), OCR will not find the translation of written materials necessary for compliance with Title VI.

OCR will consider a recipient/covered entity to be in compliance with its Title VI obligation to provide written materials in non-English languages if:

(A) The recipient/covered entity provides translated written materials, including vital documents, for each eligible LEP language group that constitutes ten percent or 3,000, whichever is less, of the population of persons eligible to be served or likely to be directly affected by the recipient/covered entity's program;[6]

(B) Regarding LEP language groups that do not fall within paragraph (A) above, but constitute five percent or 1,000, whichever is less, of the population of persons eligible to be served or likely to be directly affected, the recipient/covered entity ensures that, at a minimum, vital documents are translated into the appropriate non-English languages of such LEP persons. Translation of other documents, if needed, can be provided orally; and

(C) Notwithstanding paragraphs (A) and (B) above, a recipient with fewer than 100 persons in a language group eligible to be served or likely to be directly affected by the recipient/covered entity's program, does not translate written materials but provides written notice in the primary language of the LEP language group of the right to receive competent oral translation of written materials.

The term ''persons eligible to be served or likely to be directly affected'' relates to the issue of what is the recipient/covered entity's service area for purposes of meeting its Title VI obligation. There is no ''one size fits all'' definition of what constitutes ''persons eligible to be served or likely to be directly affected'' and OCR will address this issue on a case by case basis.

Ordinarily, persons eligible to be served or likely to be directly affected by a recipient's program are those persons who are in the geographic area that has been approved by a Federal grant agency as the recipient/covered entity's service area, and who either are eligible for the recipient/covered entity's benefits or services, or otherwise might be directly affected by such an entity's conduct. For example, a parent who might seek services for a child would be seen as likely to be affected by a recipient/covered entity's policies and practices. Where no service area has been approved by a Federal grant agency, OCR will consider the relevant service area for determining persons eligible to be served as that designated and/or approved by state or local authorities or designated by the recipient/covered entity itself, provided that these designations do not themselves discriminatorily exclude certain populations. OCR may also determine the service area to be the geographic areas from which the recipient draws, or can be expected to draw, clients/patients. The following are examples of how OCR would determine the relevant service areas when assessing who is eligible to be served or likely to be affected:

- A complaint filed with OCR alleges that a private hospital discriminates against Hispanic and Chinese LEP patients by failing to provide such persons with language assistance, including written translations of consent forms. The hospital identifies its service area as the geographic area identified in its marketing plan. OCR determines that a substantial number of the hospital's patients are drawn from the area identified in the marketing plan and that no area with concentrations of racial, ethnic or other minorities is discriminatorily excluded from the plan. OCR is likely to accept the area identified in the marketing plan as the relevant service area.
- A state enters into a contract with a managed care plan for the provision of health services to Medicaid beneficiaries. The Medicaid managed care contract provides that the plan will serve beneficiaries in three counties. The contract is reviewed and approved by HHS. In determining the persons eligible to be served or likely to be affected, the relevant service area would be that designated in the contract.

As this guidance notes, Title VI provides that no person may be denied meaningful access to a recipient/covered entity's benefits and services, on the basis of national origin. To comply with the Title VI requirement, a recipient/covered entity must ensure that LEP persons have meaningful access to and can understand information contained in program-related written documents. Thus, for

[5] The ''safe harbor'' provisions in paragraphs (A) and (B) below are not intended to establish numerical thresholds for when a recipient must translate documents. The numbers and percentages included in these provisions are based on the balancing of a number of factors, including OCR's experience in enforcing Title VI in the context of health and human services programs, and OCR's discussions with other Department agencies about experiences of their grant recipient/covered entities with language access issues.

[6] As noted above, vital documents include applications, consent forms, letters containing information regarding eligibility or participation criteria, and notices pertaining to reduction, denial or termination of services or benefits, that require a response from beneficiaries, and/or that advise of free language assistance. Large documents, such as enrollment handbooks, may not need to be translated in their entirety. However, vital information contained in large documents must be translated.

language groups that do not fall within paragraphs (A) and (B), above, a recipient can ensure such access by, at a minimum, providing notice, in writing, in the LEP person's primary language, of the right to receive free language assistance in a language other than English, including the right to competent oral translation of written materials, free of cost.

Recent technological advances have made it easier for recipient/covered entities to store translated documents readily. At the same time, OCR recognizes that recipient/covered entities in a number of areas, such as many large cities, regularly serve LEP persons from many different areas of the world who speak dozens and sometimes over 100 different languages. It would be unduly burdensome to demand that recipient/covered entities in these circumstances translate all written materials into dozens, if not more than 100 languages. As a result, OCR will determine the extent of the recipient/covered entity's obligation to provide written translations of documents on a case by case basis, looking at the totality of the circumstances.[7]

It is also important to ensure that the person translating the materials is well qualified. In addition, it is important to note that in some circumstances verbatim translation of materials may not accurately or appropriately convey the substance of what is contained in the written materials. An effective way to address this potential problem is to reach out to community-based organizations to review translated materials to ensure that they are accurate and easily understood by LEP persons.

(3) *Methods for Providing Notice to LEP Persons*—A vital part of a well-functioning compliance program includes having effective methods for notifying LEP persons regarding their right to language assistance and the availability of such assistance free of charge. These methods include but are not limited to:

—Use of language identification cards which allow LEP beneficiaries to identify their language needs to staff and for staff to identify the language needs of applicants and clients. To be effective, the cards (e.g., ''I speak cards'') must invite the LEP person to identify the language he/she speaks. This identification must be recorded in the LEP person's file;

—Posting and maintaining signs in regularly encountered languages other than English in waiting rooms, reception areas and other initial points of entry. In order to be effective, these signs must inform applicants and beneficiaries of their right to free language assistance services and invite them to identify themselves as persons needing such services;

—Translation of application forms and instructional, informational and other written materials into appropriate non-English languages by competent translators. For LEP persons whose language does not exist in written form, assistance from an interpreter to explain the contents of the document;

—Uniform procedures for timely and effective telephone communication between staff and LEP persons. This must include instructions for English-speaking employees to obtain assistance from interpreters or bilingual staff when receiving calls from or initiating calls to LEP persons; and

—Inclusion of statements about the services available and the right to free language assistance services, in appropriate non-English languages, in brochures, booklets, outreach and recruitment information and other materials that are routinely disseminated to the public.

(d) Training of Staff

Another vital element in ensuring that its policies are followed is a recipient/covered entity's dissemination of its policy to all employees likely to have contact with LEP persons, and periodic training of these employees. Effective training ensures that employees are knowledgeable and aware of LEP policies and procedures, are trained to work effectively with in-person and telephone interpreters, and understand the dynamics of interpretation between clients, providers and interpreters. It is important that this training be part of the orientation for new employees and that all employees in client contact positions be properly trained. Given the high turnover rate among some employees, recipient/covered entities may find it useful to maintain a training registry that records the names and dates of employees' training. Over the years, OCR has observed that recipient/covered entities often develop effective language assistance policies and procedures but that employees are unaware of the policies, or do not know how to, or otherwise fail to, provide available assistance. Effective training is one means of ensuring that there is not a gap between a recipient/covered entity's written policies and procedures, and the actual practices of employees who are in the front lines interacting with LEP persons.

(e) Monitoring

It is also crucial for a recipient/covered entity to monitor its language assistance program at least annually to assess the current LEP makeup of its service area, the current communication needs of LEP applicants and clients, whether existing assistance is meeting the needs of such persons, whether staff is knowledgeable about policies and procedures and how to implement them, and whether sources of and arrangements for assistance are still current and viable. One element of such an assessment is for a recipient/covered entity to seek feedback from clients and advocates. OCR has found that compliance with the Title VI language assistance obligation is most likely when a recipient/covered entity continuously monitors its program, makes modifications where necessary, and periodically trains employees in implementation of the policies and procedures.

4. OCR's Assessment of Meaningful Access

The failure to take all of the steps outlined in Section C. 3, above, will not necessarily mean that a recipient/covered entity has failed to provide meaningful access to LEP clients. As noted above, OCR will make assessments on a case by case basis and will consider several factors in assessing whether the steps taken by a recipient/covered entity provide meaningful access. Those factors include the size of the recipient/covered entity and of the eligible LEP population, the nature of the program or service, the objectives of the program, the total resources available, the frequency with which particular languages are encountered, and the frequency with which LEP persons come into contact with the program. The following are examples of

[7] For instance, a Medicaid managed care program that regularly encounters, or potentially will encounter on a regular basis, LEP persons who speak dozens or perhaps over 100 different languages, would not be required to translate the lengthy program brochure into every regularly encountered language. Rather, the recipient/covered entity in these circumstances would likely be required to translate the written materials into the most frequently encountered languages. Regarding the remaining regularly encountered languages, the recipient/covered entity would be required to ensure that the LEP person receives written notification in the appropriate non-English language of the right to free oral translation of the written materials. In addition, the recipient/covered entity would frequently be required to provide written translations of vital documents that are short in length and pertain to important aspects of critical programs, such as a cover letter that outlines the terms and conditions of participation in a Medicaid managed care program, and/or contains time sensitive information about enrollment or continued participation.

how meaningful access will be assessed by OCR:

—A physician, a sole practitioner, has about 50 LEP Hispanic patients. He has a staff of two nurses and a receptionist, derives a modest income from his practice, and receives Medicaid funds. He asserts that he cannot afford to hire bilingual staff, contract with a professional interpreter service, or translate written documents. To accommodate the language needs of his LEP patients, he has made arrangements with a Hispanic community organization for trained and competent volunteer interpreters, and with a telephone interpreter language line, to interpret during consultations and to orally translate written documents. There have been no client complaints of inordinate delays or other service related problems with respect to LEP clients. Given the physician's resources, the size of his staff, and the size of the LEP population, OCR would find the physician in compliance with Title VI.

—A county TANF program, with a large budget, serves 500,000 beneficiaries. Of the beneficiaries eligible for its services, 3,500 are LEP Chinese persons, 4,000 are LEP Hispanic persons, 2000 are LEP Vietnamese persons and about 400 are LEP Laotian persons. The county has no policy regarding language assistance to LEP persons, and LEP clients are told to bring their own interpreters, are provided with application and consent forms in English and if unaccompanied by their own interpreters, must solicit the help of other clients or must return at a later date with an interpreter. Given the size of the county program, its resources, the size of the eligible LEP population, and the nature of the program, OCR would likely find the county in violation of Title VI and would likely require it to develop a comprehensive language assistance program that includes all of the options discussed in Section C. 3, above.

—A large national corporation receives TANF funds from a local welfare agency to provide computer training to TANF beneficiaries. Of the 2,000 clients that are trained by the corporation each month, approximately one-third are LEP Hispanic persons. The corporation has made no arrangements for language assistance and relies on bilingual Hispanic students in class to help LEP students understand the oral instructions and the written materials. Based on the size of the welfare agency and corporation, their budgets, the size of the LEP population, and the nature of the program, OCR would likely find both the welfare agency and the corporation in noncompliance with Title VI. The welfare agency would likely be found in noncompliance for failing to provide LEP clients meaningful access to its benefits and services through its contract with the corporation, and for failing to monitor the training program to ensure that it provided such access. OCR would likely also find the corporation in noncompliance for failing to provide meaningful access to LEP clients and would require it to provide them with both oral and written language assistance.

5. Interpreters

Two recurring issues in the area of interpreter services involve (a) the use of friends, family, or minor children as interpreters, and (b) the need to ensure that interpreters are competent, especially in the area of medical interpretation.

(a) *Use of Friends, Family and Minor Children as Interpreters*—A recipient/covered entity may expose itself to liability under Title VI if it requires, suggests, or encourages an LEP person to use friends, minor children, or family members as interpreters, as this could compromise the effectiveness of the service. Use of such persons could result in a breach of confidentiality or reluctance on the part of individuals to reveal personal information critical to their situations. In a medical setting, this reluctance could have serious, even life threatening, consequences. In addition, family and friends usually are not competent to act as interpreters, since they are often insufficiently proficient in both languages, unskilled in interpretation, and unfamiliar with specialized terminology.

If after a recipient/covered entity informs an LEP person of the right to free interpreter services, the person declines such services and requests the use of a family member or friend, the recipient/covered entity may use the family member or friend, if the use of such a person would not compromise the effectiveness of services or violate the LEP person's confidentiality. The recipient/covered entity should document the offer and declination in the LEP person's file. Even if an LEP person elects to use a family member or friend, the recipient/covered entity should suggest that a trained interpreter sit in on the encounter to ensure accurate interpretation.

(b) *Competence of Interpreters*—In order to provide effective services to LEP persons, a recipient/covered entity must ensure that it uses persons who are competent to provide interpreter services. Competency does not necessarily mean formal certification as an interpreter, though certification is helpful. On the other hand, competency requires more than self-identification as bilingual. The competency requirement contemplates demonstrated proficiency in both English and the other language, orientation and training that includes the skills and ethics of interpreting (e.g. issues of confidentiality), fundamental knowledge in both languages of any specialized terms, or concepts peculiar to the recipient/covered entity's program or activity, sensitivity to the LEP person's culture and a demonstrated ability to convey information in both languages, accurately. A recipient/covered entity must ensure that those persons it provides as interpreters are trained and demonstrate competency as interpreters.

6. Examples of Frequently Encountered Scenarios

Over the course of the past 30 years enforcing Title VI in the LEP context, OCR has observed a number of recurring problems. The following are examples of frequently encountered policies and practices that are likely to violate Title VI:

—A woman is brought to the emergency room of a hospital by her brother. The hospital has no language assistance services and requires her brother to interpret for her. She is too embarrassed to discuss her condition through her brother and leaves without treatment. Alternatively, she is forced to use her brother as the interpreter, who is untrained in medical terminology and through whom she refuses to discuss sensitive information pertaining to her medical condition.

—A health clinic uses a Spanish-speaking security guard who has no training in interpreting skills and is unfamiliar with medical terminology, as an interpreter for its Hispanic LEP patients. He frequently relays inaccurate information that results in inaccurate instructions to patients.

—A local welfare office uses a Vietnamese janitor to interpret whenever Vietnamese applicants or beneficiaries seek services or benefits. The janitor has been in America for six months, does not speak English well and is not familiar with the terminology that is used. He often

relays inaccurate information that results in the denial of benefits to clients.

—A state welfare agency does not advise a mother of her right to free language assistance and encourages her to use her eleven year old daughter to interpret for her. The daughter does not understand the terminology being used and relays inaccurate information to her mother whose benefits are jeopardized by the failure to obtain accurate information.

—A medical clinic uses a medical student as an interpreter based on her self-identification as bilingual. While in college, the student had spent a semester in Spain as an exchange student. The student speaks Spanish haltingly and must often ask patients to speak slowly and to repeat their statements. On several occasions, she has relayed inaccurate information that has resulted in misdiagnosis.

—A managed care plan calls the receptionist at an Ethiopian community organization whenever it or one of its providers needs the services of an interpreter for an Ethiopian patient. The plan instructs the receptionist to send anyone who is available as long as that person speaks English. Many of the interpreters sent to a provider either do not understand English well enough to interpret accurately or are unfamiliar with medical terminology. As a result, clients often misunderstand their rights and benefits.

—A local welfare office forces a Mandarin-speaking client seeking to apply for SCHIP benefits on behalf of her three year old child to wait for a number of hours (or tells the client to come back another day) to receive assistance because it cannot communicate effectively with her, and has no effective plan for ensuring meaningful communication. This results in a delay of benefits.

—An HMO that enrolls Medicaid beneficiaries instructs a non-English speaking client to provide his or her own interpreter services during all office visits.

—A health plan requires non-English speaking patients to pay for interpreter services.

D. Promising Practices

In meeting the needs of their LEP patients and clients, some recipient/covered entities have found unique ways of providing interpreter services and reaching out to the LEP community. As part of its technical assistance, OCR has frequently assisted, and will continue to assist, recipient/covered entities who are interested in learning about promising practices in the area of service to LEP populations. Examples of promising practices include the following:

Simultaneous Translation—One urban hospital is testing a state of the art medical interpretation system in which the provider and patient communicate using wireless remote headsets while a trained competent interpreter, located in a separate room, provides simultaneous interpreting services to the provider and patient. The interpreter can be miles away. This reduces delays in the delivery of language assistance, since the interpreter does not have to travel to the recipient/covered entity's facility. In addition, a provider that operates more than one facility can deliver interpreter services to all facilities using this central bank of interpreters, as long as each facility is equipped with the proper technology.

Language Banks—In several parts of the country, both urban and rural, community organizations and providers have created community language banks that train, hire and dispatch competent interpreters to participating organizations, reducing the need to have on-staff interpreters for low demand languages. These language banks are frequently nonprofit and charge reasonable rates. This approach is particularly appropriate where there is a scarcity of language services, or where there is a large variety of language needs.

Language Support Office—A state social services agency has established an ''Office for Language Interpreter Services and Translation.'' This office tests and certifies all in-house and contract interpreters, provides agency-wide support for translation of forms, client mailings, publications and other written materials into non-English languages, and monitors the policies of the agency and its vendors that affect LEP persons.

Multicultural Delivery Project—Another county agency has established a ''Multicultural Delivery Project'' that is designed to find interpreters to help immigrants and other LEP persons to navigate the county health and social service systems. The project uses community outreach workers to work with LEP clients and can be used by employees in solving cultural and language issues. A multicultural advisory committee helps to keep the county in touch with community needs.

Pamphlets—A hospital has created pamphlets in several languages, entitled ''While Awaiting the Arrival of an Interpreter.'' The pamphlets are intended to facilitate basic communication between inpatients/outpatients and staff. They are not intended to replace interpreters but may aid in increasing the comfort level of LEP persons as they wait for services.

Use of Technology—Some recipient/covered entities use their internet and/or intranet capabilities to store translated documents online. These documents can be retrieved as needed.

Telephone Information Lines—Recipient/covered entities have established telephone information lines in languages spoken by frequently encountered language groups to instruct callers, in the non-English languages, on how to leave a recorded message that will be answered by someone who speaks the caller's language.

Signage and Other Outreach—Other recipient/covered entities have provided information about services, benefits, eligibility requirements, and the availability of free language assistance, in appropriate languages by (a) posting signs and placards with this information in public places such as grocery stores, bus shelters and subway stations; (b) putting notices in newspapers, and on radio and television stations that serve LEP groups; (c) placing flyers and signs in the offices of community-based organizations that serve large populations of LEP persons; and (d) establishing information lines in appropriate languages.

E. Model Plan

The following is an example of a model language assistance program that is potentially useful for all recipient/covered entities, but is particularly appropriate for entities such as hospitals or social service agencies that serve a significant and diverse LEP population. This model plan incorporates a variety of options and methods for providing meaningful access to LEP beneficiaries:

- A formal written language assistance program;
- Identification and assessment of the languages that are likely to be encountered and estimating the number of LEP persons that are eligible for services and that are likely to be affected by its program through a review of census and client utilization data and data from school systems and community agencies and organizations;
- Posting of signs in lobbies and in other waiting areas, in several languages, informing applicants and clients of their right to free interpreter services and inviting them to identify themselves as persons needing language assistance;
- Use of ''I speak'' cards by intake workers and other patient contact

personnel so that patients can identify their primary languages;

• Requiring intake workers to note the language of the LEP person in his/her record so that all staff can identify the language assistance needs of the client;

• Employment of a sufficient number of staff, bilingual in appropriate languages, in patient and client contact positions such as intake workers, caseworkers, nurses, doctors. These persons must be trained and competent as interpreters;

• Contracts with interpreting services that can provide competent interpreters in a wide variety of languages, in a timely manner;

• Formal arrangements with community groups for competent and timely interpreter services by community volunteers;

• An arrangement with a telephone language interpreter line;

• Translation of application forms, instructional, informational and other key documents into appropriate non-English languages. Provision of oral interpreter assistance with documents, for those persons whose language does not exist in written form;

• Procedures for effective telephone communication between staff and LEP persons, including instructions for English-speaking employees to obtain assistance from bilingual staff or interpreters when initiating or receiving calls from LEP persons;

• Notice to and training of all staff, particularly patient and client contact staff, with respect to the recipient/covered entity's Title VI obligation to provide language assistance to LEP persons, and on the language assistance policies and the procedures to be followed in securing such assistance in a timely manner;

• Insertion of notices, in appropriate languages, about the right of LEP applicants and clients to free interpreters and other language assistance, in brochures, pamphlets, manuals, and other materials disseminated to the public and to staff;

• Notice to the public regarding the language assistance policies and procedures, and notice to and consultation with community organizations that represent LEP language groups, regarding problems and solutions, including standards and procedures for using their members as interpreters;

• Adoption of a procedure for the resolution of complaints regarding the provision of language assistance; and for notifying clients of their right to and how to file a complaint under Title VI with HHS.

• Appointment of a senior level employee to coordinate the language assistance program, and ensure that there is regular monitoring of the program.

F. Compliance and Enforcement

The recommendations outlined above are not intended to be exhaustive. Recipient/covered entities have considerable flexibility in determining how to comply with their legal obligation in the LEP setting, and are not required to use all of the suggested methods and options listed. However, recipient/covered entities must establish and implement policies and procedures for providing language assistance sufficient to fulfill their Title VI responsibilities and provide LEP persons with meaningful access to services.

OCR will enforce Title VI as it applies to recipient/covered entities' responsibilities to LEP persons through the procedures provided for in the Title VI regulations. These procedures include complaint investigations, compliance reviews, efforts to secure voluntary compliance, and technical assistance.

The Title VI regulations provide that OCR will investigate whenever it receives a complaint, report or other information that alleges or indicates possible noncompliance with Title VI. If the investigation results in a finding of compliance, OCR will inform the recipient/covered entity in writing of this determination, including the basis for the determination. If the investigation results in a finding of noncompliance, OCR must inform the recipient/covered entity of the noncompliance through a Letter of Findings that sets out the areas of noncompliance and the steps that must be taken to correct the noncompliance, and must attempt to secure voluntary compliance through informal means. If the matter cannot be resolved informally, OCR must secure compliance through (a) the termination of Federal assistance after the recipient/covered entity has been given an opportunity for an administrative hearing, (b) referral to DOJ for injunctive relief or other enforcement proceedings, or (c) any other means authorized by law.

As the Title VI regulations set forth above indicate, OCR has a legal obligation to seek voluntary compliance in resolving cases and cannot seek the termination of funds until it has engaged in voluntary compliance efforts and has determined that compliance cannot be secured voluntarily. OCR will engage in voluntary compliance efforts, and will provide technical assistance to recipients at all stages of its investigation. During these efforts to secure voluntary compliance, OCR will propose reasonable timetables for achieving compliance and will consult with and assist recipient/covered entities in exploring cost effective ways of coming into compliance, by sharing information on potential community resources, by increasing awareness of emerging technologies, and by sharing information on how other recipient/covered entities have addressed the language needs of diverse populations.

OCR will focus its compliance review efforts primarily on larger recipient/covered entities such as hospitals, managed care organizations, state agencies, and social service organizations, that have a significant number or percentage of LEP persons eligible to be served, or likely to be directly affected, by the recipient/covered entity's program. Generally, it has been the experience of OCR that in order to ensure compliance with Title VI, these recipient/covered entities will be expected to utilize a wider range of the language assistance options outlined in section C. 3, above.

The fact that OCR is focusing its investigative resources on larger recipient/covered entities with significant numbers or percentages of LEP persons likely to be served or directly affected does not mean that other recipient/covered entities are relieved of their obligation under Title VI, or will not be subject to review by OCR. In fact, OCR has a legal obligation under HHS regulations to promptly investigate all complaints alleging a violation of Title VI. All recipient/covered entities must take steps to overcome language differences that result in barriers and provide the language assistance needed to ensure that LEP persons have meaningful access to services and benefits. However, smaller recipient/covered entities—such as sole practitioners, those with more limited resources, and recipient/covered entities who serve small numbers of LEP persons on an infrequent basis—will have more flexibility in meeting their obligations to ensure meaningful access for LEP persons.

In determining a recipient/covered entity's compliance with Title VI, OCR's primary concern is to ensure that the recipient/covered entity's policies and procedures overcome barriers resulting from language differences that would deny LEP persons a meaningful opportunity to participate in and access programs, services and benefits. A recipient/covered entity's appropriate

use of the methods and options discussed in this policy guidance will be viewed by OCR as evidence of a recipient/covered entity's willingness to comply voluntarily with its Title VI obligations.

G. Technical Assistance

Over the past 30 years, OCR has provided substantial technical assistance to recipient/covered entities, and will continue to be available to provide such assistance to any recipient/covered entity seeking to ensure that it operates an effective language assistance program. In addition, during its investigative process, OCR is available to provide technical assistance to enable recipient/covered entities to come into voluntary compliance.

H. Attachments

Appendix A is a summary, in question and answer format, of a number of the critical elements of this guidance. The purpose of the summary is to assist recipient/covered entities further in understanding this guidance and their obligations under Title VI to ensure meaningful access to LEP persons. Appendix B is a list of numerous provisions, including but not limited to Federal and state laws and regulations, requiring the provision of language assistance to LEP persons in various circumstances. This list is not exhaustive, and is not limited to the health and human service context.

Appendix A: Questions and Answers Regarding the Office for Civil Rights Policy Guidance on the Title VI Prohibition Against National Origin Discrimination as it Affects Persons With Limited English Proficiency

1. Q. What Is the Purpose of the Guidance on Language Access Released by the Office for Civil Rights (OCR) of the U.S. Department of Health and Human Services (HHS)?

A. The purpose of the Policy Guidance is two-fold: First, to clarify the responsibilities of providers of health and social services who receive Federal financial assistance from HHS, and assist them in fulfilling their responsibilities to Limited English Proficient (LEP) persons, pursuant to Title VI of the Civil Rights Act of 1964; and second, to clarify to members of the public that health and social service providers must ensure that LEP persons have meaningful access to their programs and services.

2. Q. What Does the Policy Guidance Do?

A. The policy guidance does the following:

- Reiterates the principles of Title VI with respect to LEP persons.
- Discusses the policies, procedures and other steps that recipients can take to ensure meaningful access to their program by LEP persons.
- Clarifies that failure to take one or more of these steps does not necessarily mean noncompliance with Title VI.
- Provides that OCR will determine compliance on a case by case basis, and that such assessments will take into account the size of the recipient, the size of the LEP population, the nature of the program, the resources available, and the frequency of use by LEP persons.
- Provides that small providers and recipient/covered entities with limited resources, will have a great deal of flexibility in achieving compliance.
- Provides that OCR will provide extensive technical assistance as needed by recipient/covered entities.

3. Q. Does the Guidance Impose New Requirements on Recipient/Covered Entities?

A. No. Since its enactment, Title VI of the Civil Rights Act of 1964 has prohibited discrimination on the basis of race, color or national origin in any program or activity that receives federal financial assistance. In order to avoid violating Title VI, recipient/covered entities must ensure that they provide LEP persons meaningful opportunity to participate in their programs, services and benefits. Over the past three decades, OCR has conducted thousands of investigations and reviews involving language differences that affect the access of LEP persons to medical care and social services. Where such language differences prevent meaningful access on the basis of national origin, the law requires that recipient/covered entities provide oral and written language assistance at no cost to the recipient. This guidance synthesizes the legal requirements that have been on the books and that OCR has been enforcing for over three decades.

4. Q. Who Is Covered by the Guidance?

A. Covered entities include any state or local agency, private institution or organization, or any public or private individual that (1) operates, provides or engages in health, or social service programs and activities, and (2) receives Federal financial assistance from HHS directly or through another recipient/covered entity. Examples of covered entities include but are not limited to hospitals, nursing homes, home health agencies, managed care organizations, universities and other entities with health or social service research programs; state, county and local health agencies; state Medicaid agencies; state, county and local welfare agencies; programs for families, youth and children; Head Start programs; public and private contractors, subcontractors and vendors; physicians; and other providers who receive Federal financial assistance from HHS.

5. Q. How Does the Guidance Affect Small Practitioners and Providers?

A. The key to providing meaningful access for LEP persons is to ensure that the relevant circumstances of the LEP person's situation can be effectively communicated to the service provider and the LEP person is able to understand the services and benefits available and is able to receive those services and benefits for which he or she is eligible in a timely manner. Small practitioners and providers will have considerable flexibility in determining precisely how to fulfill their obligations to ensure meaningful access for persons with limited English proficiency. OCR will assess compliance on a case by case basis and will take into account the size of the recipient/covered entity, the size of the eligible LEP population it serves, the nature of the program or service, the objectives of the program, the total resources available to the recipient/covered entity, the frequency with which languages are encountered and the frequency with which LEP persons come into contact with the program. There is no ''one size fits all'' solution for Title VI compliance with respect to LEP persons.

In other words, OCR will focus on the end result, that is, whether the small practitioner or provider has taken steps, given the factors that will be considered by OCR, to ensure that the LEP persons have access to the programs and services provided by the physician. OCR will continue to be available to provide technical assistance to any physician seeking to ensure that s/he operates an effective language assistance program.

For example: A physician, a sole practitioner, has about 50 LEP Hispanic patients. He has a staff of two nurses and a receptionist derives a modest income from his practice, and receives Medicaid funds. He asserts that he cannot afford to hire bilingual staff, contract with a professional interpreter service, or translate written documents. To accommodate the language needs of his LEP patients he has made arrangements with a Hispanic community organization for trained and competent volunteer interpreters and with a telephone interpreter language line, to interpret during consultations and to orally translate written documents. There have been no client complaints of inordinate delays or other service related problems with respect to LEP clients. Given the physician's resources, the size of his staff, and the size of the LEP population, OCR would find the physician in compliance with Title VI.

6. Q. The Guidance Identifies Some Specific Circumstances Under Which OCR Will Consider a Program To Be in Compliance With Its Obligation Under Title VI To Provide Written Materials in Languages Other Than English. Does This Mean That a Recipient/Covered Entity Will Be Considered Out of Compliance With Title VI if Its Program Does Not Fall Within These Circumstances?

A. No. The circumstances outlined in the guidance are intended to provide a ''safe harbor'' for recipients who desire greater certainty with respect to their obligations to provide written translations. Thus, a recipient/covered entity whose policies and practices fall within these circumstances can be confident that, with respect to written translations, it will be found in compliance with Title VI. However, the failure to fall within the ''safe harbors'' outlined in the guidance does not necessarily mean that a recipient/covered entity is not in compliance with Title VI. In such circumstances, OCR will review the totality of circumstances to determine the precise nature of a recipient/covered entity's obligation to provide written materials in languages other than English. If

translation of a certain document or set of documents would be so financially burdensome as to defeat the legitimate objectives of its program, or if there is an alternative means of ensuring that LEP persons have meaningful access to the information provided in the document (such as timely, effective oral interpretation of vital documents), OCR will likely not find the translation necessary for compliance with Title VI.

7. Q. The Guidance Makes Reference to "Vital Documents" and Notes That, in Certain Circumstances, a Recipient/Covered Entity May Have To Translate Such Documents Into Other Languages. What Is a Vital Document?

A. Given the wide array of programs and activities receiving HHS financial assistance, we do not attempt to identify vital documents and information with specificity in each program area. Rather, a document or information should be considered vital if it contains information that is critical for accessing the federal fund recipient's services and/or benefits, or is required by law. Thus, vital documents include, but are not limited to, applications, consent forms, letters and notices pertaining to the reduction, denial or termination of services or benefits, letters or notices that require a response from the beneficiary or client, and documents that advise of free language assistance. OCR will also collaborate with respective HHS agencies in determining which documents and information are deemed to be vital within a particular program.

8. Q. Will Recipient/Covered Entities Have To Translate Large Documents Such as Managed Care Enrollment Handbooks?

A. Not necessarily. As part of its overall language assistance program, a recipient must develop and implement a plan to provide written materials in languages other than English where a significant number or percentage of the population eligible to be served, or likely to be directly affected by the program, needs services or information in a language other than English to communicate effectively. OCR will assess the need for written translation of documents and vital information contained in larger documents on a case by case basis, taking into account all relevant circumstances, including the nature of the recipient/covered entity's services or benefits, the size of the recipient/covered entity, the number and size of the LEP language groups in its service area, the nature and length of the document, the objectives of the program, the total resources available to the recipient/covered entity, the frequency which particular languages are encountered and the frequency with which translated documents are needed and the cost of translation. Depending on these circumstances, large documents, such as enrollment handbooks, may not need to be translated or may not need to be translated in their entirety. For example, a recipient/covered entity may be required to provide written translations of vital information contained in larger documents, but may not have to translate the entire document, to meet its obligations under Title VI.

9. Q. May a Recipient/Covered Entity Require an LEP Person To Use a Family Member or a Friend as His or Her Interpreter?

A. No. OCR's policy requires the recipient/covered entity to inform the LEP person of the right to receive free interpreter services first and permits the use of family and friends only after such offer of assistance has been declined and documented. Our policy regarding the use of family and friends as interpreters is based on over three decades of experience with Title VI. Although OCR recognizes that some individuals may be uncomfortable having a stranger serve as an interpreter, especially when the situation involves the discussion of very personal or private matters, it is our experience that family and friends frequently are not competent to act as interpreters, since they may be insufficiently proficient in both languages, untrained and unskilled as interpreters, and unfamiliar with specialized terminology. Use of such persons also may result in breaches of confidentiality or reluctance on the part of the individual to reveal personal information critical to their situations. These concerns are even more pronounced when the family member called upon to interpret is a minor. In other words, when family and friends are used, there is a grave risk that interpretation may not be accurate or complete. In medical settings, in particular, this can result in serious, even life threatening consequences.

10. Q. How Does Low Health Literacy, Non-Literacy, Non-Written Languages, Blindness and Deafness Among LEP Populations Affect the Responsibilities of Federal Fund Recipients?

A. Effective communication in any language requires an understanding of the literacy levels of the eligible populations. However, literacy generally is a program operations issue rather than a Title VI issue. Where a LEP individual has a limited understanding of health matters or cannot read, access to the program is complicated by factors not directly related to national origin or language. Under these circumstances, a recipient/covered entity should provide remedial health information to the same extent that it would provide such information to English-speakers. Similarly, a recipient/covered entity should assist LEP individuals who cannot read in understanding written materials as it would non-literate English-speakers. A non-written language precludes the translation of documents, but does not affect the responsibility of the recipient to communicate the vital information contained in the document or to provide notice of the availability of oral translation. Section 504 of the Rehabilitation Act of 1973 requires that federal fund recipients provide sign language and oral interpreters for people who have hearing impairments and provide materials in alternative formats such as in large print, braille or on tape for individuals with impairments. The Americans with Disabilities Act imposes similar requirements on health and human service providers.

11. Q. Can OCR Provide Help to Recipient/Covered Entities Who Wish To Come Into Compliance With Title VI?

A. Absolutely. For over three decades, OCR has provided substantial technical assistance to recipient/covered entities who are seeking to ensure that LEP persons can meaningfully access their programs or services. Our regional staff is prepared to work with recipients to help them meet their obligations under Title VI. As part of its technical assistance services, OCR can help identify best practices and successful strategies used by other federal fund recipients, identify sources of federal reimbursement for translation services, and point providers to other resources.

12. Q. How Will OCR Enforce Compliance by Recipient/Covered Entities With the LEP Requirements of Title VI?

A. OCR will enforce Title VI as it applies to recipient/covered entities through the procedures provided for in the Title VI regulations. The Title VI regulations provide that OCR will investigate whenever it receives a complaint, report, or other information that alleges or indicates possible noncompliance with Title VI. If the investigation results in a finding of compliance, OCR will inform the recipient/covered entity in writing of this determination, including the basis for the determination. If the investigation results in a finding of noncompliance, OCR must inform the recipient/covered entity of the noncompliance through a Letter of Findings that sets out the areas of noncompliance and the steps that must be taken to correct the noncompliance. By regulation, OCR must attempt to secure voluntary compliance through informal means. In practice, OCR has been quite successful in securing voluntary compliance and will continue these efforts. If the matter cannot be resolved informally, OCR must secure compliance through (a) the termination of Federal assistance after the recipient/covered entity has been given an opportunity for an administrative hearing, (b) referral to DOJ for injunctive relief or other enforcement proceedings, or (c) any other means authorized by law.

13. Q. Does Issuing This Guidance Mean That OCR Will Be Changing How it Enforces Compliance With Title VI?

A. No. How OCR enforces Title VI is governed by the Title VI implementing regulations. The methods and procedures used to investigate and resolve complaints, and conduct compliance reviews, have not changed.

14. Q. What Is HHS Doing To Ensure It Is Following the Guidance It Is Giving to States and Others?

A. Although legally, federally conducted programs and activities are not subject to Title VI, HHS recognizes the importance of ensuring that its programs and services are accessible to LEP persons. To this end, HHS has established a working group to assess how HHS itself is providing language access. Currently, agencies across HHS have taken a number of important steps to ensure that their programs and services are accessible to

LEP persons. For example, a number of agencies have translated important consumer materials into languages other than English. Also, several agencies have launched Spanish language web sites. In order to ensure that all HHS federally conducted programs and activities are accessible to LEP persons, the Secretary has directed the working group to develop and implement a Department-wide plan for ensuring LEP persons meaningful access to HHS programs. This internal HHS initiative was begun prior to the President's August 11, 2000, Executive Order 13166, ''Improving Access to Services for Persons with Limited English Proficiency''. The Executive Order requires Federal Agencies to develop and implement a system for ensuring LEP persons meaningful access to their federally-conducted programs. It also requires agencies to issue guidance to their recipients on the recipients' obligations to provide LEP persons meaningful access to their federally-assisted programs. HHS is a step ahead on each of the obligations outlined in the Executive Order.

Appendix B: Selected Federal and State Laws and Regulations Requiring Language Assistance

Federal Laws and Regulations

Federal laws that recognize the need for language assistance include:

1. The Voting Rights Act, which bans English-only elections and prescribes other remedial devices to ensure nondiscrimination against language minorities; [1]
2. The Food Stamp Act of 1977, which requires states to provide written and oral language assistance to LEP persons under certain circumstances; [2]
3. Judicial procedure laws that require the use of certified or otherwise qualified interpreters for LEP parties and witnesses, at the government's expense, in certain proceedings; [3]
4. The Older Americans Act, which requires state planning agencies to use outreach workers who are fluent in the languages of older LEP persons, where there is a substantial number of such persons in a planning area; [4]
5. The Substance Abuse and Mental Health Administration Reorganization Act, which requires services provided with funds under the statute to be bilingual if appropriate; [5]
6. The Disadvantaged Minority Health Improvement Act, which requires the Office of Minority Health (OMH) to enter into contracts to increase the access of LEP persons to health care by developing programs to provide bilingual or interpreter services; [6]
7. The Equal Educational Opportunities Act of 1974, which requires educational agencies to take appropriate action to accommodate the language differences that impede equal participation by students in instructional programs; [7] and
8. Regulations issued by the Health Care Financing Administration (HCFA) which require that evaluations for the mentally ill and mentally retarded be adapted to the cultural background, language, ethnic origin and means of communication of the person being evaluated.[8]

State Laws and Regulations

Many states have recognized the seriousness of the language access challenge and have enacted laws that require providers to offer language assistance to LEP persons in many service settings.[9] States that require language assistance include:

1. California, which provides that intermediate care facilities must use interpreters and other methods to ensure adequate communication between staff and patients; [10]
2. New Jersey, which provides that drug and alcohol treatment facilities must provide interpreter services if their patient population is non-English speaking; [11]
3. Pennsylvania, which provides that a patient who does not speak English should have access, where possible, to an interpreter; [12] and
4. Massachusetts, which in April 2000, enacted legislation that requires every acute care hospital to provide competent interpreter services to LEP patients in connection with all emergency room services.[13]

Medical Accreditation Organizations

1. The Joint Committee on Accreditation of Healthcare Organizations (JCAHO), which accredits hospitals and other health care institutions, requires language assistance in a number of situations. For example, its accreditation manual for hospitals provides that written notice of patients' rights must be appropriate to the patient's age, understanding and language.[14]
2. The National Committee for Quality Assurance (NCQA), which provides accreditation for managed care organizations, also requires language assistance in a variety of settings. As part of its evaluation process, the NCQA assesses managed care member materials to determine whether they are available in languages, other than English, spoken by major population groups.

October 26, 2001.

Memorandum for Heads of Departments and Agencies General Counsels and Civil Rights Directors

From: Ralph F. Boyd, Jr., Assistant Attorney General, Civil Rights Division

Subject: Executive Order 13166 (Improving Access to Services for Persons with Limited English Proficiency)

Federal agencies have recently raised several questions regarding the requirements of Executive Order 13166. This Memorandum responds to those questions. As discussed below, in view of the clarifications provided in this Memorandum, agencies that have issued Limited English Proficiency (''LEP'') guidance for their recipients pursuant to Executive Order 113166 and Title VI of the Civil Rights Act should, after notifying the Department of Justice (''DOJ''), publish a notice asking for public comment on the guidance documents they have issued. Based on the public comment it receives and this Memorandum, an agency may need to clarify or modify its existing guidance to the Department of Justice. Following approval by the Department of Justice and before finalizing its guidance, each agency should obtain public comment on their proposed guidance documents. With regard to plans for federally conducted programs and activities, agencies should review their plans in light of the clarifications provided below.

Background of Executive Order 13166

The legal basis for Executive Order 13166 is explained in policy guidance issued by the Department of Justice entitled ''Enforcement of Title VI of the Civil Rights Act of 1964—National Origin Discrimination Against Persons With Limited English Proficiency.'' 65 F.R. 50123 (August 16, 2000). This ''DOJ LEP Guidance'' was referenced in and issued concurrently with the Executive Order.

As the DOJ LEP Guidance details, Title VI of the Civil Rights Act of 1964 prohibits discrimination on the basis of race, color, or national origin in any program or activity receiving federal financial assistance. Department of Justice regulations enacted to effectuate this prohibition bar recipients of federal financial assistance from ''utiliz[ing] criteria or methods of administration which have the effect of subjecting individuals to discrimination'' because of their race, color, or national origin. These regulations thus prohibit unjustified disparate impact on the basis of national origin.

As applied, the regulations have been interpreted to require foreign language assistance in certain circumstances. For instance, where a San Francisco school district had a large number of non-English speaking students of Chinese origin, it was required to take reasonable steps to provide them with a meaningful opportunity to participate in federally funded educational

[1] 42 U.S.C. Section 1973 b(f)(1).

[2] 7 U.S.C. Section 2020(e)(1) and (2)(A).

[3] 28 U.S.C. Section 1827(d)(1)(a).

[4] 42 U.S.C. Section 3027(a)(20)(A).

[5] 42 U.S.C. Section 290aa(d)(14).

[6] 42 U.S.C. Section 300u-6(b)(7).

[7] 20 U.S.C. Section 1703(f).

[8] 42 C.F.R. Section 483.128(b).

[9] At least twenty six (26) states and the District of Columbia have enacted legislation requiring language assistance, such as interpreters and/or translated forms and other written materials, for LEP persons.

[10] 22 California Code of Regulations, Section 73501. California has a wide array of other laws and regulations that require language assistance, including those that require: (a) Intermediate nursing facilities to use interpreters and other methods to ensure adequate communications with patients, (b) adult day care centers to employ ethnic and linguistic staff as indicated by participant characteristics, (c) certified interpreters for non-English speaking persons at administrative hearings, and (d) health licensing agencies to translate patients rights information into every language spoken by 1% or more of the nursing home population.

[11] New Jersey Administrative Code Section 42A–6.7.

[12] 28 Pennsylvania Administrative Code Section 103.22(b)(14).

[13] M.G.L.A. 111, Section 25J.

[14] JCAHO, 1997 Accreditation Manual for Hospitals, Section R1.1.4.

programs. *Lau v. Nichols*, 414 U.S. 563 (1974)[1]

The Supreme Court most recently addressed the scope of the Title VI disparate impact regulations in *Alexander v. Sandoval,* 121 S. Ct. 1511 (2001). There, the Court held that there is no private right of action to enforce these regulations. It ruled that, even if the Alabama Department of Public Safety's policy of administering driver's license examinations only in English violates the Title VI regulations, a private party could not bring a case to enjoin Alabama's policy. some have interpreted *Sandoval* as impliedly striking down Title VI's disparate impact regulations and thus that part of Executive Order 13166 that applies to federally assisted programs and activities.[2]

The Department of Justice disagrees. *Sandoval* holds principally that there is no private right of action to enforce the Title VI disparate impact regulations. It did not address the validity of those regulations or Executive Order 13166. Because the legal basis for Executive Order 13166 is the Title VI disparate impact regulations and because *Sandoval* did not invalidate those regulations, it is the position of the Department of Justice that the Executive Order remains in force.

Requirements of Executive Order 13166

Federally Assisted Programs and Activities. The DOJ LEP Guidance explains that, with respect to federally assisted programs and activities, Executive Order 13166 ''does not create new obligations, but rather, clarifies existing Title VI responsibilities.'' Its purpose is to clarify for federal-funds recipients the steps those recipients can take to avoid administering programs in a way that results in discrimination on the basis of national origin in violation of the Title VI disparate impact regulations. To this end, the Order requires each Federal Agency providing federal financial assistance to explain to recipients of federal funds their obligations under the Title VI disparate impact regulations.

In developing their own LEP guidance for recipients of federal funds, an agency should balance the factors set forth in the DOJ LEP Guidance. These factors include, but are not limited to (i) the number or proportion of LEP individuals, (ii) the frequency of contact with the program, (iii) the nature and importance of the program, and (iv) the resources available.

As the DOJ LEP Guidance explains, ''a factor in determining the reasonableness of a recipient's efforts is the number or proportion of people who will be excluded from the benefits or services absent efforts to remove language barriers.'' Similarly, the frequency of contact must be considered. Where the frequency and number of contacts is so small as to preclude any significant national origin based disparate impact, agencies may conclude that the Title VI disparate impact regulations impose no substantial LEP obligations on recipients.

The nature and importance of the program is another factor. Where the denial or delay of access may have life or death implications, LEP services are of much greater importance than where denial of access results in mere inconvenience.

Resources available and costs must likewise be weighed. A small recipient with limited resources may not have to take the same steps as a larger recipient. *See* DOJ LEP Guidance at 50125. Costs, too, must be factored into this balancing test. ''Reasonable steps'' may cease to be reasonable where the costs imposed substantially exceed the benefits in light of the factors outlined in the DOJ LEP Guidance. The DOJ LEP Guidance explains that a small recipient may not have to take substantial steps ''where contact is infrequent, where the total costs of providing language services is relatively high and where the program is not crucial to an individual's day-to-day existence.'' By contrast, where number and frequency of contact is high, where the total costs for LEP services are reasonable, and where the lack of access may have life and death implicates, the availability of prompt LEP services may be critical. In these latter cases, claims based on lack of resources will need to be well substantiated.

Finally, consideration of resources available naturally implicates the ''mix'' of LEP services required. While on-the-premise translators may be needed in certain circumstances, written translation, access to centralized translation language lines or other means may be appropriate in the majority of cases. The correct balance should be based on what is both necessary to eliminate unjustified disparate impact prohibited by the Title VI regulations and reasonable in light of the factors outlined in the DOJ LEP Guidance.

Federally Conducted Programs and Activities. Executive Order 13166 also applies to federally conducted programs and activities. With respect to these, the Order requires each Federal Agency to prepare a plan to improve access to federally conducted programs and activities by eligible LEP persons. These plans, too, must be consistent with the DOJ LEP Guidance. Federal agencies should apply the same standards to themselves as they apply to their recipients.

Procedural Considerations

Administrative Procedure Act: Agency action taken pursuant to Executive Order 13166 and the DOJ LEP Guidance may be subject to the Administrative Procedure Act's (''APA'') rulemaking requirements. 5 U.S.C. § 553. Although interpretive rules, general statements of policy, and rules of agency organization and procedure are not subject to section 553, courts have ruled that any final agency action that carries the force and effect of law must comply with section 553's notice and comments requirements. *See Paralyzed Veterans of America v. D. C. Arena,* 117 F.3d 579, 588 (D.C. Cir. 1997). Agencies, therefore, should consider whether the action they have taken or that they propose to take to implement Executive Order 13166 and Title VI of the Civil Rights Act is subject to the APA's requirements. If it is, they must comply with these statutory obligations. Agencies must bear in mind, however, that Executive Order 13166 ''does not create new obligations, but rather, clarifies existing Title VI responsibilities.'' Accordingly, agency action taken pursuant to Executive Order 13166 must not impose new obligations on recipients of federal funds, but should instead help recipients to understand their existing obligations.

Executive Order 12866: Agency action taken pursuant to Executive Order 13166 and the DOJ LEP Guidance may also be subject to requirements set forth in Executive Order 12866 (*Regulatory Review and Planning,* Sept. 30, 1993). That Order directs agencies to submit to the Office of Management and Budget for review any ''significant regulatory actions'' the agency wishes to take. *See* § 6(a). Agencies, therefore, should consider whether the action they have taken or that they propose to take to implement Executive Order 13166 and Title VI of the Civil Rights Act is subject to Executive Order 12866's requirements. If it is, they should ensure that the action or proposed action complies with Executive Order 12866's obligations. With regard to federally conducted programs and activities, agencies should review their plans for their federally conducted programs in light of the clarifications below and make any necessary modifications.

Further Agency Action

Existing LEP Guidance and Plans for Federally Conducted Programs and Activities: Agencies that have already published LEP guidance pursuant to Executive Order 13166 or Title VI of the Civil Rights Act should obtain public comment on the guidance documents they have issued. Agencies should then review their existing guidance documents in view of public comment and for consistency with the clarifications provided in this Memorandum. The Justice Department's Civil Rights Division, Coordination and Review Section ((202) 307–2222), is available to assist agencies in making this determination. Should this review lead an agency to conclude that it is appropriate to clarify or modify aspects of its LEP guidance documents, it should notify the Department of Justice of that conclusion within 60 days from the date of this Memorandum. Any agency effort to clarify or modify existing LEP guidance should be completed within 120 days from the date of this Memorandum. Agencies likewise should review plans for federally conducted programs and activities in light of the above clarification.

New LEP Guidance and Plans for Federally Conducted Programs and Activities: Agencies that have not yet published LEP guidance pursuant to Executive Order 13166 and Title VI of the Civil Rights Act should submit to

[1] ''It seems obvious that the Chinese-speaking minority receive fewer benefits than the English-speaking majority from respondents' school system which denies them a meaningful opportunity to participate in the education program—all earmarks of the discrimination banned by the regulations.'' 414 U.S. at 568.

[2] *See Sandoval,* 121 S. Ct. at 1519 n.6 (''[W]e assume for purposes of this decision that § 602 confers the authority to promulgate disparate-impact regulations; * * * We cannot help observing, however, how strange it is to say that disparate-impact regulations are 'inspired by, at the service of, and inseparably intertwined with' § 601 * * * when § 601 permits the very behavior that the regulations forbid.'').

the Department of Justice, within 60 days from the date of this Memorandum, agency-specific recipient guidance that is consistent with Executive Order 13166 and the DOJ LEP Guidance, including the clarifications set forth in this Memorandum. In preparing their guidance, agencies should ensure that the action they propose to take is consistent with the requirements of the Administrative Procedure Act and Executive Order 12866. The Justice Department's Civil Rights Division, Coordination and Review Section, is available to assist agencies in preparing agency-specific guidance. Following approval by the Department of Justice and before finalizing its guidance, each agency should obtain public comment on its proposed guidance documents. Final agency-specific LEP guidance should be published within 120 days from the date of this memorandum. Agencies likewise should submit to the Department of Justice plans for federally conducted programs and activities. The Department of Justice is the central repository for these agency plans.

* * * * *

Federally assisted programs and activities may not be administered in a way that violates the Title VI regulations. Each Federal Agency is responsible for ensuring that its agency-specific guidance outlines recipients' obligations under the Title VI regulations and the steps recipients can take to avoid violating these obligations. While Executive Order 13166 requires only that Federal Agencies take steps to eliminate recipient discrimination based on national origin prohibited by Title VI, each Federal Agency is encouraged to explore whether, as a matter of policy, additional affirmative outreach to LEP individuals is appropriate. Federal Agencies likewise must eliminate national origin discrimination in their own federally conducted programs and activities. The Department of Justice is available to help agencies in reviewing and preparing agency-specific LEP guidance and federally conducted plans.

[FR Doc. 02–2467 Filed 1–31–02; 8:45 am]

BILLING CODE 4153–01–P

DEPARTMENT OF HEALTH AND HUMAN SERVICES

Centers for Medicare and Medicaid Services

[Document Identifier: CMS–R–266]

Agency Information Collection Activities: Proposed Collection; Comment Request

AGENCY: Centers for Medicare and Medicaid Services, HHS.

In compliance with the requirement of section 3506(c)(2)(A) of the Paperwork Reduction Act of 1995, the Centers for Medicare and Medicaid Services (CMS) (formerly known as the Health Care Financing Administration (HCFA)), Department of Health and Human Services, is publishing the following summary of proposed collections for public comment. Interested persons are invited to send comments regarding this burden estimate or any other aspect of this collection of information, including any of the following subjects: (1) The necessity and utility of the proposed information collection for the proper performance of the agency's functions; (2) the accuracy of the estimated burden; (3) ways to enhance the quality, utility, and clarity of the information to be collected; and (4) the use of automated collection techniques or other forms of information technology to minimize the information collection burden. *Type of Information Collection Request:* Extension of a currently approved collection; *Title of Information Collection:* Medicaid Disproportionate Share Hospital Payments—Institutions for Mental Disease; *Form No.:* HCFA–R–0266 (OMB# 0938–0746); *Use:* This PRA package announces the Federal share of disproportionate share hospital (DSH) allotments for Federal fiscal years (FFYs) 1998 through 2002. It also describes the methodology for calculating the Federal share DSH allotments for FFY 2003 and thereafter, and announces the FFY 1998 and FFY 1999 limitations on aggregate DSH payments States may make to institutions for mental disease (IMD) and other mental health facilities; *Frequency:* Annually; *Affected Public:* State, Local, or Tribal Government; *Number of Respondents:* 54; *Total Annual Responses:* 54; *Total Annual Hours:* 2,160.

To obtain copies of the supporting statement and any related forms for the proposed paperwork collections referenced above, access CMS's Web Site address at *http://www.hcfa.gov/regs/prdact95.htm,* or E-mail your request, including your address, phone number, OMB number, and CMS document identifier, to *Paperwork@hcfa.gov,* or call the Reports Clearance Office on (410) 786–1326. Written comments and recommendations for the proposed information collections must be mailed within 60 days of this notice directly to the CMS Paperwork Clearance Officer designated at the following address: CMS, Office of Information Services, Security and Standards Group, Division of CMS Enterprise Standards, Attention: Julie Brown, CMS–R–266, Room N2–14–26, 7500 Security Boulevard, Baltimore, Maryland 21244–1850.

Dated: January 9, 2002.

John P. Burke, III,

Reports Clearance Officer, Security and Standards Group, Division of CMS Enterprise Standards.

[FR Doc. 02–2442 Filed 1–31–02; 8:45 am]

BILLING CODE 4120–03–P

DEPARTMENT OF HEALTH AND HUMAN SERVICES

Centers for Medicare and Medicaid Services

[Document Identifier: CMS–2786]

Agency Information Collection Activities: Proposed Collection; Comment Request

AGENCY: Centers for Medicare and Medicaid Services, HHS.

In compliance with the requirement of section 3506(c)(2)(A) of the Paperwork Reduction Act of 1995, the Centers for Medicare and Medicaid Services (CMS) (formerly known as the Health Care Financing Administration (HCFA)), Department of Health and Human Services, is publishing the following summary of proposed collections for public comment. Interested persons are invited to send comments regarding this burden estimate or any other aspect of this collection of information, including any of the following subjects: (1) The necessity and utility of the proposed information collection for the proper performance of the agency's functions; (2) the accuracy of the estimated burden; (3) ways to enhance the quality, utility, and clarity of the information to be collected; and (4) the use of automated collection techniques or other forms of information technology to minimize the information collection burden.

Type of Information Collection Request: Extension of a currently approved collection; *Title of Information Collection:* Fire Safety Survey Report Forms and Supporting Regulations in 42 CFR 416.44, 418.100, 482.41, 483.70, 483.470; *Form No.:* CMS–2786 A–D, F, G, H, J, K, L, M, P and Q (OMB# 0938–0242); *Use:* The information from these forms will be used to make Medicare/Medicaid certification decisions. We request information in accordance with the Life Safety Code of the National Fire Protection Association. CMS then surveys all facilities based upon prior compliance history; that is, the ''good'' facilities will be surveyed less frequently. Either the short or long fire safety form will be utilized each time a health survey is performed, depending

on the circumstances; *Frequency:* Annually; *Affected Public:* State, Local, or Tribal Government; *Number of Respondents:* 53; *Total Annual Responses:* 30,000; *Total Annual Hours:* 25,000.

To obtain copies of the supporting statement and any related forms for the proposed paperwork collections referenced above, access CMS's Web Site address at *http://www.hcfa.gov/regs/prdact95.htm,* or E-mail your request, including your address, phone number, OMB number, and CMS document identifier, to *Paperwork@hcfa.gov,* or call the Reports Clearance Office on (410) 786–1326. Written comments and recommendations for the proposed information collections must be mailed within 60 days of this notice directly to the CMS Paperwork Clearance Officer designated at the following address: CMS, Office of Information Services, Security and Standards Group, Division of CMS Enterprise Standards, Attention: Julie Brown, CMS–2786, Room N2–14–26, 7500 Security Boulevard, Baltimore, Maryland 21244–1850.

Dated: January 9, 2002.

John P. Burke, III,

Reports Clearance Officer, Security and Standards Group, Division of CMS Enterprise Standards.

[FR Doc. 02–2443 Filed 1–31–02; 8:45 am]

BILLING CODE 4120–03–P

DEPARTMENT OF HEALTH AND HUMAN SERVICES

Centers for Medicare and Medicaid Services

[Document Identifier: CMS–1500]

Agency Information Collection Activities: Proposed Collection; Comment Request

AGENCY: Centers for Medicare and Medicaid Services, HHS.

In compliance with the requirement of section 3506(c)(2)(A) of the Paperwork Reduction Act of 1995, the Centers for Medicare and Medicaid Services (formerly the Health Care Financing Administration), Department of Health and Human Services, is publishing the following summary of proposed collections for public comment. Interested persons are invited to send comments regarding this burden estimate or any other aspect of this collection of information, including any of the following subjects: (1) The necessity and utility of the proposed information collection for the proper performance of the agency's functions; (2) the accuracy of the estimated burden; (3) ways to enhance the quality, utility, and clarity of the information to be collected; and (4) the use of automated collection techniques or other forms of information technology to minimize the information collection burden.

Type of Information Request: Extension of a currently approved collection; *Title of Information Collection:* Medicare/Medicaid Health Insurance Common Claim Form, Instructions, and Supporting Regulations: 42 CFR 414.40, 424.32, 424.44; *Form Number:* CMS–1500, CMS–1490U, CMS–1490S (OMB #: 0938–0008); *Use*: This form is a standardized form for use in the Medicare/Medicaid programs to apply for reimbursement for covered services. Many private insurers also use this form. Use of this form reduces cost and administrative burdens associated with professional claims because only one format needs to be used and maintained. CMS does not require exclusive use of this form for Medicaid.; *Frequency:* On occasion; *Affected Public:* State, Local or Tribal Government, Business or other for-profit, Not-for-profit institutions; *Number of Respondents:* 1,216,702; *Total Annual Responses:* 740,215,135; *Total Annual Hours Requested:* 42,941,276.

To obtain copies of the supporting statement and any related forms for the proposed paperwork collections referenced above, access CMS's Web site address at *http://www.hcfa.gov/regs/prdact95.htm,* or e-mail your request, including your address, phone number, OMB number, and CMS document identifier, to *Paperwork@hcfa.gov,* or call the Reports Clearance Office on (410) 786–1326. Written comments and recommendations for the proposed information collections must be mailed within 60 days of this notice directly to the CMS Paperwork Clearance Officer designated at the following address: CMS, Office of Information Services, Security and Standards Group, Division of CMS Enterprise Standards, Attention: Melissa Musotto, Room N2–14–26, 7500 Security Boulevard, Baltimore, Maryland 21244–1850

Dated: January 23, 2002.

John P. Burke, III,

CMS Reports Clearance Officer, CMS Office of Information Services, Security and Standards Group, Division of CMS Enterprise Standards.

[FR Doc. 02–2444 Filed 1–31–02; 8:45 am]

BILLING CODE 4120–03–P

DEPARTMENT OF HEALTH AND HUMAN SERVICES

Centers for Medicare and Medicaid Services

[Document Identifier: CMS–1450]

Agency Information Collection Activities: Proposed Collection; Comment Request

AGENCY: Centers for Medicare and Medicaid Services, HHS.

In compliance with the requirement of section 3506(c)(2)(A) of the Paperwork Reduction Act of 1995, the Centers for Medicare and Medicaid Services (formerly the Health Care Financing Administration), Department of Health and Human Services, is publishing the following summary of proposed collections for public comment. Interested persons are invited to send comments regarding this burden estimate or any other aspect of this collection of information, including any of the following subjects: (1) The necessity and utility of the proposed information collection for the proper performance of the agency's functions; (2) the accuracy of the estimated burden; (3) ways to enhance the quality, utility, and clarity of the information to be collected; and (4) the use of automated collection techniques or other forms of information technology to minimize the information collection burden.

Type of Information Request: Extension of a currently approved collection; *Title of Information Collection:* Medicare Uniform Institutional Provider Bill and Supporting Regulations in 42 CFR 424.5; Form Number: CMS–1450 (OMB #: 0938–0247); *Use:* This standardized form is used in the Medicare/Medicaid program to apply for reimbursement of covered services by all providers that accept Medicare/Medicaid assigned claims; *Frequency:* On occasion; *Affected Public:* Business or other for-profit, Not-for-profit institutions; *Number of Respondents:* 46,708; *Total Annual Responses:* 158,603,859; *Total Annual Hours Requested:* 1,735,178.

To obtain copies of the supporting statement and any related forms for the proposed paperwork collections referenced above, access CMS's Web site address at *http://www.hcfa.gov/regs/prdact95.htm,* or e-mail your request, including your address, phone number, OMB number, and CMS document identifier, to *Paperwork@hcfa.gov,* or call the Reports Clearance Office on (410) 786–1326. Written comments and recommendations for the proposed information collections must be mailed

within 60 days of this notice directly to the CMS Paperwork Clearance Officer designated at the following address: CMS, Office of Information Services, Security and Standards Group, Division of CMS Enterprise Standards Attention: Melissa Musotto, Room N2–14–26, 7500 Security Boulevard, Baltimore, Maryland 21244–1850.

Dated: January 23, 2002.

John P. Burke, III,

CMS Reports Clearance Officer, CMS Office of Information Services, Security and Standards Group, Division of CMS Enterprise Standards.

[FR Doc. 02–2445 Filed 1–31–02; 8:45 am]

BILLING CODE 4120–03–P

DEPARTMENT OF HEALTH AND HUMAN SERVICES

Centers for Medicare and Medicaid Services

[Document Identifier: CMS–R–10]

Agency Information Collection Activities: Proposed Collection; Comment Request

AGENCY: Centers for Medicare and Medicaid Services, HHS.

In compliance with the requirement of section 3506(c)(2)(A) of the Paperwork Reduction Act of 1995, the Centers for Medicare and Medicaid Services (formerly the Health Care Financing Administration), Department of Health and Human Services, is publishing the following summary of proposed collections for public comment. Interested persons are invited to send comments regarding this burden estimate or any other aspect of this collection of information, including any of the following subjects: (1) The necessity and utility of the proposed information collection for the proper performance of the agency's functions; (2) the accuracy of the estimated burden; (3) ways to enhance the quality, utility, and clarity of the information to be collected; and (4) the use of automated collection techniques or other forms of information technology to minimize the information collection burden.

Type of Information Collection Request: Extension of a currently approved collection; *Title of Information Collection:* Information Collection Requirements contained in BPD–718: Advance Directives (Medicare and Medicaid); *Form No.:* CMS–R–10; *Use:* Certain Medicare and Medicaid organizations are responsible for collecting and documenting, in medical records, whether or not an individual has executed an advance directive, this document indicates the individual's preference if he/she is incapacitated. *Frequency:* On occasion; *Affected Public:* Business or other for-profit, Not-for-profit institutions, Federal government, and State, local or tribal government; *Number of Respondents:* 34,365; *Total Annual Responses:* 34,365; *Total Annual Hours Requested:* 960,500.

To obtain copies of the supporting statement and any related forms for the proposed paperwork collections referenced above, access CMS's Web site address at *http://www.hcfa.gov/regs/prdact95.htm,* or e-mail your request, including your address, phone number, OMB number, and CMS document identifier, to *Paperwork@hcfa.gov,* or call the Reports Clearance Office on (410) 786–1326. Written comments and recommendations for the proposed information collections must be mailed within 60 days of this notice directly to the CMS Paperwork Clearance Officer designated at the following address: CMS, Office of Information Services, Security and Standards Group, Division of CMS Enterprise Standards, Attention: Melissa Musotto, Room N2–14–26, 7500 Security Boulevard, Baltimore, Maryland 21244–1850.

Dated: January 23, 2002.

John P. Burke, III,

CMS Reports Clearance Officer, CMS Office of Information Services, Security and Standards Group, Division of CMS Enterprise Standards.

[FR Doc. 02–2446 Filed 1–31–02; 8:45 am]

BILLING CODE 4120–03–P

DEPARTMENT OF HEALTH AND HUMAN SERVICES

Centers for Medicare and Medicaid Services

[Document Identifier: CMS–R–71]

Agency Information Collection Activities: Proposed Collection; Comment Request

AGENCY: Centers for Medicare and Medicaid Services, HHS.

In compliance with the requirement of section 3506(c)(2)(A) of the Paperwork Reduction Act of 1995, the Centers for Medicare and Medicaid Services (CMS) (formerly known as the Health Care Financing Administration (HCFA)), Department of Health and Human Services, is publishing the following summary of proposed collections for public comment. Interested persons are invited to send comments regarding this burden estimate or any other aspect of this collection of information, including any of the following subjects: (1) The necessity and utility of the proposed information collection for the proper performance of the agency's functions; (2) the accuracy of the estimated burden; (3) ways to enhance the quality, utility, and clarity of the information to be collected; and (4) the use of automated collection techniques or other forms of information technology to minimize the information collection burden.

Type of Information Collection Request: Extension of a currently approved collection; *Title of Information Collection:* Information Collection Requirements in HSQ–108F Assumption of Responsibilities and Supporting Regulations in 42 CFR Sections 412.44, 412.46, 431.630, 456.654, 476.71, 476.73, 476.74, 476.78; *Form No.*: CMS–R–71 (OMB# 0938–0445); *Use*: This rule establishes the review functions to be peformed by the PRO. It outlines relationships among PROs, providers, practitioners, beneficiaries, intermediaries, and carriers; *Frequency*: As needed; *Affected Public*: Business or other for-profit; *Number of Respondents*: 6,036+53; *Total Annual Responses*: 6,036; *Total Annual Hours*: 45,653.

To obtain copies of the supporting statement and any related forms for the proposed paperwork collections referenced above, access CMS's Web site address at *http://www.hcfa.gov/regs/prdact95.htm*, or e-mail your request, including your address, phone number, OMB number, and HCFA document identifier, to *Paperwork@hcfa.gov*, or call the Reports Clearance Office on (410) 786–1326. Written comments and recommendations for the proposed information collections must be mailed within 60 days of this notice directly to the CMS Paperwork Clearance Officer designated at the following address: CMS, Office of Information Services, Security and Standards Group, Division of CMS Enterprise Standards, Attention: Melissa Musotto, Room N2–14–26, 7500 Security Boulevard, Baltimore, Maryland 21244–1850.

Dated: January 23, 2002.

John P. Burke, III,

Reports Clearance Officer, Security and Standards Group, Division of CMS Enterprise Standards.

[FR Doc. 02–2452 Filed 1–31–02; 8:45 am]

BILLING CODE 4120–03–P

DEPARTMENT OF HEALTH AND HUMAN SERVICES

Centers for Medicare and Medicaid Services

[Document Identifier: CMS–10050]

Agency Information Collection Activities: Proposed Collection; Comment Request

AGENCY: Centers for Medicare and Medicaid Services, HHS.

In compliance with the requirement of section 3506(c)(2)(A) of the Paperwork Reduction Act of 1995, the Centers for Medicare and Medicaid Services (formerly the Health Care Financing Administration), Department of Health and Human Services, is publishing the following summary of proposed collections for public comment. Interested persons are invited to send comments regarding this burden estimate or any other aspect of this collection of information, including any of the following subjects: (1) The necessity and utility of the proposed information collection for the proper performance of the agency's functions; (2) the accuracy of the estimated burden; (3) ways to enhance the quality, utility, and clarity of the information to be collected; and (4) the use of automated collection techniques or other forms of information technology to minimize the information collection burden.

Type of Information Collection Request: New Collection; *Title of Information Collection:* Survey of Newly Eligible Medicare Beneficiaries; *Form No.:* CMS–10050 (OMB# 0938–NEW); *Use:* It is not enough to merely mail information about the Medicare program to each beneficiary. We need to know not only that the beneficiaries got the information, but that they understood the information and are able to use it in making choices about their Medicare participation. To this end, CMS must have measure(s) over time of what beneficiaries know and understand about the Medicare program now to be able to quantify and attribute any changes to their understanding or behavior to information/education initiatives. Measuring beneficiary information needs and knowledge over time will help us to evaluate the impact of information/education and other initiatives as well as to understand how the population is changing apart from such initiatives.; *Frequency:* Monthly; *Affected Public:* Individuals or Households; *Number of Respondents:* 3600; *Total Annual Responses:* 3600; *Total Annual Hours:* 1080.

To obtain copies of the supporting statement and any related forms for the proposed paperwork collections referenced above, access CMS's Web site address at *http://www.hcfa.gov/regs/prdact95.htm,* or e-mail your request, including your address, phone number, OMB number, and CMS document identifier, to *Paperwork@hcfa.gov,* or call the Reports Clearance Office on (410) 786–1326. Written comments and recommendations for the proposed information collections must be mailed within 60 days of this notice directly to the CMS Paperwork Clearance Officer designated at the following address: CMS, Office of Information Services, Security and Standards Group, Division of CMS Enterprise Standards, Attention: Melissa Musotto, Room N2–14–26, 7500 Security Boulevard, Baltimore, Maryland 21244–1850.

Dated: January 23, 2002.

John P. Burke, III,

CMS Reports Clearance Officer, CMS Office of Information Services, Security and Standards Group, Division of CMS Enterprise Standards.

[FR Doc. 02–2453 Filed 1–31–02; 8:45 am]

BILLING CODE 4120–03–P

DEPARTMENT OF HEALTH AND HUMAN SERVICES

Centers for Medicare and Medicaid Services

[Document Identifier: CMS–R–13]

Agency Information Collection Activities: Submission For OMB Review; Comment Request

In compliance with the requirement of section 3506(c)(2)(A) of the Paperwork Reduction Act of 1995, the Centers for Medicare and Medicaid Services (CMS), Department of Health and Human Services, has submitted to the Office of Management and Budget (OMB) the following proposal for the collection of information. Interested persons are invited to send comments regarding the burden estimate or any other aspect of this collection of information, including any of the following subjects: (1) The necessity and utility of the proposed information collection for the proper performance of the agency's functions; (2) the accuracy of the estimated burden; (3) ways to enhance the quality, utility, and clarity of the information to be collected; and (4) the use of automated collection techniques or other forms of information technology to minimize the information collection burden.

Type of Information Collection Request: Extension of a currently approved collection; *Title of Information Collection:* Conditions of Coverage for Organ Procurement Organizations (OPOs) and Supporting Regulations in 42 CFR, Section 486.301-.325; *Form No.:* CMS–R–13 (OMB# 0938–0688); *Use:* OPOs are required to submit accurate data to CMS concerning population and information on donors and organs on an annual basis in order to assure maximum effectiveness in the procurement and distribution of organs.; *Frequency:* Annually; *Affected Public:* Not-for-profit institutions; *Number of Respondents:* 59; *Total Annual Responses:* 59; *Total Annual Hours:* 1.

To obtain copies of the supporting statement for the proposed paperwork collections referenced above, access HCFA's Web site address at *http://www.hcfa.gov/regs/prdact95.htm,* or e-mail your request, including your address and phone number, to Paperwork@cms.hhs.gov, or call the Reports Clearance Office on (410) 786–1326. Written comments and recommendations for the proposed information collections must be mailed within 30 days of this notice directly to the OMB Desk Officer designated at the following address: OMB Human Resources and Housing Branch, Attention: Allison Eydt, New Executive Office Building, Room 10235, Washington, DC 20503.

Dated: November 28, 2002.

John P. Burke, III,

CMS Reports Clearance Officer, CMS, Office of Information Services, Security and Standards Group, Division of CMS Enterprise Standards.

[FR Doc. 02–2441 Filed 1–31–02; 8:45 am]

BILLING CODE 4120–03–P

DEPARTMENT OF HEALTH AND HUMAN SERVICES

Center for Medicare and Medicaid Services

[Document Identifier: CMS–R–268]

Agency Information Collection Activities: Submission for OMB Review; Comment Request

AGENCY: Center for Medicare and Medicaid Services, HHS.

In compliance with the requirement of section 3506(c)(2)(A) of the Paperwork Reduction Act of 1995, the Center for Medicare and Medicaid Services (CMS) (formerly known as the Health Care Financing Administration (HCFA), Department of Health and Human Services, is publishing the following summary of proposed collections for public comment. Interested persons are invited to send

comments regarding this burden estimate or any other aspect of this collection of information, including any of the following subjects: (1) The necessity and utility of the proposed information collection for the proper performance of the agency's functions; (2) the accuracy of the estimated burden; (3) ways to enhance the quality, utility, and clarity of the information to be collected; and (4) the use of automated collection techniques or other forms of information technology to minimize the information collection burden.

Type of Information Collection Request: Revision of a currently approved collection; *Title of Information Collection:* MS Interactive Survey Tool for www.medicare.gov; *Form Nos.:* HCFA–R–268 (OMB No. 0938–0756); *Use:* HHS has developed a survey tool using MSInteractive to obtain feedback from users accessing www.medicare.gov to guide future improvements; *Frequency:* Users will have the opportunity to complete the bounceback form twice a year; *Affected Public:* Individuals or Households, Business or other for-profit, and Not-for-profit institutions; *Number of Respondents:* 7,000; *Total Annual Responses:* 7,000; *Total Annual Hours:* 583.

To obtain copies of the supporting statement and any related forms for the proposed paperwork collections referenced above, access CMS Web site address at *http://www.hcfa.gov/regs/prdact95.htm,* or e-mail your request, including your address, phone number, OMB number, and CMS' document identifier, to *Paperwork@hcfa.gov,* or call the Reports Clearance Office on (410) 786–1326. Written comments and recommendations for the proposed information collections must be mailed within 30 days of this notice directly to the OMB desk officer: OMB Human Resources and Housing Branch, Attention: Allison Eydt, New Executive Office Building, Room 10235, Washington, DC 20503.

Dated: November 23, 2001.

Julie E. Brown,

Acting CMS Reports Clearance Officer, CMS Office of Information Services, Security and Standards Group, Division of CMS Enterprise Standards.

[FR Doc. 02–2447 Filed 1–31–02; 8:45 am]

BILLING CODE 4210–03–P

DEPARTMENT OF HEALTH AND HUMAN SERVICES

Center for Medicare and Medicaid Services

[Document Identifier: CMS–R–185]

Agency Information Collection Activities: Submission for OMB Review; Comment Request

AGENCY: Center for Medicare and Medicaid Services, HHS.

In compliance with the requirement of section 3506(c)(2)(A) of the Paperwork Reduction Act of 1995, the Center for Medicare and Medicaid Services (CMS) (formerly known as the Health Care Financing Administration (HCFA), Department of Health and Human Services, is publishing the following summary of proposed collections for public comment. Interested persons are invited to send comments regarding this burden estimate or any other aspect of this collection of information, including any of the following subjects: (1) The necessity and utility of the proposed information collection for the proper performance of the agency's functions; (2) the accuracy of the estimated burden; (3) ways to enhance the quality, utility, and clarity of the information to be collected; and (4) the use of automated collection techniques or other forms of information technology to minimize the information collection burden.

Type of Information Collection Request: Extension of a currently approved collection; *Title of Information Collection:* Granting and Withdrawal of Deeming Authority to Private Nonprofit Accreditation Organizations and of State Exemption Under State Laboratory Programs and Supporting Regulations in 42 CFR 493.551–493.557; *Form No.:* CMS–R–185 (OMB# 0938–0686); *Use:* The information required is necessary to determine whether a private accreditation organization's or State licensure program's standards and accreditation/licensure process is equal to or more stringent than those of CLIA; *Frequency:* Other: Initial application/as needed; *Affected Public:* Not-for-profit institutions, Business or other for-profit, State, local or tribal government; *Number of Respondents:* 8; *Total Annual Responses:* 76; *Total Annual Hours:* 768.

To obtain copies of the supporting statement and any related forms for the proposed paperwork collections referenced above, access CMS' Web site address at *http://www.hcfa.gov/regs/prdact95.htm,* or e-mail your request, including your address, phone number, OMB number, and CMS' document identifier, to *Paperwork@hcfa.gov,* or call the Reports Clearance Office on (410) 786–1326. Written comments and recommendations for the proposed information collections must be mailed within 30 days of this notice directly to the OMB desk officer: OMB Human Resources and Housing Branch, Attention: Allison Eydt, New Executive Office Building, Room 10235, Washington, DC 20503.

Dated: December 6, 2001.

John P. Burke, III,

CMS Reports Clearance Officer, CMS Office of Information Services, Security and Standards Group, Division of CMS Enterprise Standards.

[FR Doc. 02–2448 Filed 1–31–02; 8:45 am]

BILLING CODE 4120–03–P

DEPARTMENT OF HEALTH AND HUMAN SERVICES

Center for Medicare and Medicaid Services

[Document Identifier: CMS–1515/1527]

Agency Information Collection Activities: Submission for OMB Review; Comment Request

AGENCY: Center for Medicare and Medicaid Services, HHS.

In compliance with the requirement of section 3506(c)(2)(A) of the Paperwork Reduction Act of 1995, the Center for Medicare and Medicaid Services (CMS) (formerly known as the Health Care Financing Administration (HCFA), Department of Health and Human Services, is publishing the following summary of proposed collections for public comment. Interested persons are invited to send comments regarding this burden estimate or any other aspect of this collection of information, including any of the following subjects: (1) The necessity and utility of the proposed information collection for the proper performance of the agency's functions; (2) the accuracy of the estimated burden; (3) ways to enhance the quality, utility, and clarity of the information to be collected; and (4) the use of automated collection techniques or other forms of information technology to minimize the information collection burden.

Type of Information Collection Request: Extension of a currently approved collection; *Title of Information Collection:* Home Health Agency Survey and Deficiencies Report, Home Health Functional Assessment Instrument and Supporting Regulations

in 42 CFR 484.1–484.52; *Form No.:* HCFA–1515/1572 (OMB# 0938–0355); *Use:* In order to participate in the Medicare program as a Home Health Agency (HHA) provider, the HHA must meet Federal Standards. These forms are used to record information about patients' health and provider compliance with requirements; *Frequency:* Annually; *Affected Public:* Business or other for-profit, Not-for-profit institutions; *Number of Respondents:* 6,997; *Total Annual Responses:* 13,994; *Total Annual Hours:* 13,994.

To obtain copies of the supporting statement and any related forms for the proposed paperwork collections referenced above, access CMS'' Web Site address at *http://www.hcfa.gov/regs/prdact95.htm,* or E-mail your request, including your address, phone number, OMB number, and CMS document identifier, to *Paperwork@hcfa.gov,* or call the Reports Clearance Office on (410) 786–1326. Written comments and recommendations for the proposed information collections must be mailed within 30 days of this notice directly to the OMB desk officer: OMB Human Resources and Housing Branch, Attention: Allison Eydt, New Executive Office Building, Room 10235, Washington, DC 20503.

Dated: December 6, 2001.

John P. Burke, III,

CMS Reports Clearance Officer, CMS Office of Information Services, Security and Standards Group, Division of CMS Enterprise Standards.

[FR Doc. 02–2449 Filed 1–31–02; 8:45 am]

BILLING CODE 4120–03–P

DEPARTMENT OF HEALTH AND HUMAN SERVICES

Center for Medicare and Medicaid Services

[Document Identifier: CMS–R–306]

Agency Information Collection Activities: Submission for OMB Review; Comment Request

AGENCY: Center for Medicare and Medicaid Services, HHS.

In compliance with the requirement of section 3506(c)(2)(A) of the Paperwork Reduction Act of 1995, the Center for Medicare and Medicaid Services (CMS) (formerly known as the Health Care Financing Administration (HCFA), Department of Health and Human Services, is publishing the following summary of proposed collections for public comment. Interested persons are invited to send comments regarding this burden estimate or any other aspect of this collection of information, including any of the following subjects: (1) The necessity and utility of the proposed information collection for the proper performance of the agency's functions; (2) the accuracy of the estimated burden; (3) ways to enhance the quality, utility, and clarity of the information to be collected; and (4) the use of automated collection techniques or other forms of information technology to minimize the information collection burden.

Type of Information Collection Request: Extension of a currently approved collection; *Title of Information Collection:* Restraint and Seclusion Standards for Psychiatric Residential Treatment Facilities; *Form No.:* CMS–R–305 (OMB# 0938–0786); *Use:* Psychiatric residential treatment facilities are required to report deaths, serious injuries and attempted suicides to State Medicaid Agency and Protection and Advocacy Organization. They are also required to provide residents restraint and seclusion policy in writing and to document resident record of all activities involving use of restraint and seclusion; *Frequency:* On occasion; *Affected Public:* Business or other for-profit, Not for profit institutions; *Number of Respondents:* 500; *Total Annual Responses:* 2,600,000; *Total Annual Hours:* 877,750.

To obtain copies of the supporting statement and any related forms for the proposed paperwork collections referenced above, access CMS' Web site address at *http://www.hcfa.gov/regs/prdact95.htm,* or e-mail your request, including your address, phone number, OMB number, and CMS′ document identifier, to *Paperwork@hcfa.gov,* or call the Reports Clearance Office on (410) 786–1326. Written comments and recommendations for the proposed information collections must be mailed within 30 days of this notice directly to the OMB desk officer: OMB Human Resources and Housing Branch, Attention: Brenda Aguilar, New Executive Office Building, Room 10235, Washington, DC 20503.

Dated: December 6, 2001.

John P. Burke, III,

CMS Reports Clearance Officer, CMS Office of Information Services, Security and Standards Group, Division of CMS Enterprise Standards.

[FR Doc. 02–2450 Filed 1–31–02; 8:45 am]

BILLING CODE 4120–03–P

DEPARTMENT OF HEALTH AND HUMAN SERVICES

Center for Medicare and Medicaid Services

[Document Identifier: CMS–R–200]

Agency Information Collection Activities: Submission for OMB Review; Comment Request

AGENCY: Center for Medicare and Medicaid Services, HHS.

In compliance with the requirement of section 3506(c)(2)(A) of the Paperwork Reduction Act of 1995, the Center for Medicare and Medicaid Services (CMS) (formerly known as the Health Care Financing Administration (HCFA), Department of Health and Human Services, is publishing the following summary of proposed collections for public comment. Interested persons are invited to send comments regarding this burden estimate or any other aspect of this collection of information, including any of the following subjects: (1) The necessity and utility of the proposed information collection for the proper performance of the agency's functions; (2) the accuracy of the estimated burden; (3) ways to enhance the quality, utility, and clarity of the information to be collected; and (4) the use of automated collection techniques or other forms of information technology to minimize the information collection burden.

Type of Information Collection Request: Reinstatement, with change, of a previously approved collection for which approval has expired; *Title of Information Collection*: Health Plan Employer Data and Information Set (HEDIS) and Health Outcome Survey (HOS) and Supporting Regulations in 42 CFR 422.152; *Form No.*: CMS–R–200 (OMB# 0938–0701); *Use*: The Centers for Medicare & Medicaid Services (formerly HCFA) collects quality performance measures in order to hold the Medicare managed care industry accountable for the care being delivered, to enable quality improvement, and to provide quality information to Medicare beneficiaries in order to promote an informed choice. It is critical to CMS's mission that we collect and disseminate information that will help beneficiaries chose among health plans, contribute to improved quality of care through identification of improvement opportunities, and assist CMS in carrying out its oversight and purchasing responsibilities; *Frequency*: Annually; *Affected Public*: Business or other for-profit, Not-for-profit institutions, Individuals or households;

Number of Respondents: 313,825; *Total Annual Responses*: 313,825; *Total Annual Hours*: 571,488.

To obtain copies of the supporting statement and any related forms for the proposed paperwork collections referenced above, access CMS' Web site address at *http://www.hcfa.gov/regs/prdact95.htm*, or e-mail your request, including your address, phone number, OMB number, and CMS document identifier, to *Paperwork@hcfa.gov*, or call the Reports Clearance Office on (410) 786–1326. Written comments and recommendations for the proposed information collections must be mailed within 30 days of this notice directly to the OMB desk officer: OMB Human Resources and Housing Branch, Attention: Allison Eydt, New Executive Office Building, Room 10235, Washington, DC 20503.

Dated: January 23, 2002.

John P. Burke, III,

CMS Reports Clearance Officer, CMS Office of Information Services, Security and Standards Group, Division of CMS Enterprise Standards.

[FR Doc. 02–2451 Filed 1–31–02; 8:45 am]

BILLING CODE 4120–03–P

DEPARTMENT OF HEALTH AND HUMAN SERVICES

Center for Medicare and Medicaid Services

[Document Identifier: CMS–10044]

Agency Information Collection Activities: Submission for OMB Review; Comment Request

AGENCY: Center for Medicare and Medicaid Services, HHS.

In compliance with the requirement of section 3506(c)(2)(A) of the Paperwork Reduction Act of 1995, the Center for Medicare and Medicaid Services (CMS) (formerly known as the Health Care Financing Administration (HCFA), Department of Health and Human Services, is publishing the following summary of proposed collections for public comment. Interested persons are invited to send comments regarding this burden estimate or any other aspect of this collection of information, including any of the following subjects: (1) The necessity and utility of the proposed information collection for the proper performance of the agency's functions; (2) the accuracy of the estimated burden; (3) ways to enhance the quality, utility, and clarity of the information to be collected; and (4) the use of automated collection techniques or other forms of information technology to minimize the information collection burden.

Type of Information Collection Request: New Collection; *Title of Information Collection:* Medicare Lifestyle Modificatoin Program Demonstration; *Form No.:* CMS–10044 (OMB# 0938–NEW); *Use:* This demonstration will focus on two Medicare sponsored, lifestyle modification programs designed to reverse, reduce or ameliorate the progression of coronary artery disease (CAD) at risk for significant morbidity and mortality. This demonstration will test the cost-effectiveness and feasibility of providing payment for cardiovascular lifestyle modification program services to Medicare beneficiaries.; *Frequency:* Baseline Enrollment, 12 and 24 months; *Affected Public:* Individuals or Households; *Number of Respondents:* 2,240; *Total Annual Responses:* 1,680; *Total Annual Hours:* 1,106.

To obtain copies of the supporting statement and any related forms for the proposed paperwork collections referenced above, access CMS' Web site address at *http://www.hcfa.gov/regs/prdact95.htm,* or e-mail your request, including your address, phone number, OMB number, and CMS document identifier, to *Paperwork@hcfa.gov,* or call the Reports Clearance Office on (410) 786–1326. Written comments and recommendations for the proposed information collections must be mailed within 30 days of this notice directly to the OMB desk officer: OMB Human Resources and Housing Branch, Attention: Allison Eydt, New Executive Office Building, Room 10235, Washington, DC 20503.

Dated: January 24, 2002.

John P. Burke, III,

CMS Reports Clearance Officer, CMS Office of Information Services, Security and Standards Group, Division of CMS Enterprise Standards.

[FR Doc. 02–2454 Filed 1–31–02; 8:45 am]

BILLING CODE 4120–03–P

DEPARTMENT OF HEALTH AND HUMAN SERVICES

Food and Drug Administration

Best Practices for Reducing Transfusion Errors; Public Workshop

AGENCY: Food and Drug Administration, HHS.

ACTION: Notice of public workshop.

The Food and Drug Administration (FDA) is announcing the following public workshop: Best Practices for Reducing Transfusion Errors. The purpose of the public workshop is to discuss practices and techniques that may decrease transfusion errors, including systems and technology that can be applied to reducing transfusion errors.

Date and Time: The public workshop will be held on February 14, 2002, from 8:30 a.m. to 5 p.m., and February 15, 2002, from 8:30 a.m. to 12:30 p.m.

Location: The public workshop will be held at the Natcher Conference Center, National Institutes of Health, Bldg. 45, 45 Center Dr., 8600 Rockville Pike, Bethesda, MD.

Contact: Joseph Wilczek, Center for Biologics Evaluation and Research (HFM–302), Food and Drug Administration, 1401 Rockville Pike, Rockville, MD 20852–1448, 301–827–6129, FAX 301–827–2843.

Registration: Send registration information (including name, title, firm name, address, telephone, and fax number) to the contact person by February 5, 2002. Onsite registration on a space available basis will begin at 7:30 a.m. on the days of the workshop. There is no registration fee. If you need special accommodations due to a disability, please contact Joseph Wilczek at least 7 days in advance.

Transcripts: Transcripts of the public workshop may be requested in writing from the Freedom of Information Office (HFI–35), Food and Drug Administration, 5600 Fishers Lane, rm. 12A–16, Rockville, MD 20857, approximately 15 working days after the meeting at a cost of 10 cents per page. The public workshop transcript will also be available on the Internet at http://www.fda.gov/cber/minutes/workshop-min.htm.

SUPPLEMENTARY INFORMATION: FDA and the Agency for Healthcare Research and Quality, Department of Health and Human Services, are cosponsoring a public workshop on avoiding errors in transfusion medicine. On the first day of the workshop, topics to be discussed include: Patient and medication identification, errors in manufacturing and testing of blood and blood components, system errors and cultural factors, and the role of product deviation reporting in reducing transfusion errors. The second day of the workshop will address current as well as future technology trends that should help prevent transfusion errors. The public workshop agenda is posted on the Internet at http://www.fda.gov/cber/meetings/trnfsnerr021402.htm.

Dated: January 28, 2002.

Margaret M. Dotzel,

Associate Commissioner for Policy.

[FR Doc. 02–2550 Filed 1–31–02; 8:45 am]

BILLING CODE 4160–01–S

DEPARTMENT OF HEALTH AND HUMAN SERVICES

Substance Abuse and Mental Health Services Administration

Current List of Laboratories Which Meet Minimum Standards To Engage in Urine Drug Testing for Federal Agencies

AGENCY: Substance Abuse and Mental Health Services Administration, HHS.

ACTION: Notice.

SUMMARY: The Department of Health and Human Services notifies Federal agencies of the laboratories currently certified to meet standards of subpart C of Mandatory Guidelines for Federal Workplace Drug Testing Programs (59 FR 29916, 29925). A notice listing all currently certified laboratories is published in the **Federal Register** during the first week of each month. If any laboratory's certification is suspended or revoked, the laboratory will be omitted from subsequent lists until such time as it is restored to full certification under the Guidelines.

If any laboratory has withdrawn from the National Laboratory Certification Program during the past month, it will be listed at the end, and will be omitted from the monthly listing thereafter.

This notice is also available on the Internet at the following Web sites: *http://workplace.samhsa.gov;http://www.drugfreeworkplace.gov;*and *http://www.health.org/workplace.*

FOR FURTHER INFORMATION CONTACT: Mrs. Giselle Hersh or Dr. Walter Vogl, Division of Workplace Programs, 5600 Fishers Lane, Rockwall 2 Building, Room 815, Rockville, Maryland 20857; Tel.: (301) 443–6014, Fax: (301) 443–3031.

SUPPLEMENTARY INFORMATION: Mandatory Guidelines for Federal Workplace Drug Testing were developed in accordance with Executive Order 12564 and section 503 of Pub. L. 100–71. Subpart C of the Guidelines, ''Certification of Laboratories Engaged in Urine Drug Testing for Federal Agencies,'' sets strict standards which laboratories must meet in order to conduct urine drug testing for Federal agencies. To become certified an applicant laboratory must undergo three rounds of performance testing plus an on-site inspection.

To maintain that certification a laboratory must participate in a quarterly performance testing program plus periodic, on-site inspections.

Laboratories which claim to be in the applicant stage of certification are not to be considered as meeting the minimum requirements expressed in the HHS Guidelines. A laboratory must have its letter of certification from SAMHSA, HHS (formerly: HHS/NIDA) which attests that it has met minimum standards.

In accordance with Subpart C of the Guidelines, the following laboratories meet the minimum standards set forth in the Guidelines:

ACL Laboratories, 8901 W. Lincoln Ave., West Allis, WI 53227, 414–328–7840/800–877–7016 (Formerly: Bayshore Clinical Laboratory)

ACM Medical Laboratory, Inc., 160 Elmgrove Park, Rochester, NY 14624, 716–429–2264

Advanced Toxicology Network, 3560 Air Center Cove, Suite 101, Memphis, TN 38118, 901–794–5770/888–290–1150

Aegis Analytical Laboratories, Inc., 345 Hill Ave., Nashville, TN 37210, 615–255–2400

Alliance Laboratory Services, 3200 Burnet Ave., Cincinnati, OH 45229, 513–585–9000 (Formerly: Jewish Hospital of Cincinnati, Inc.)

American Medical Laboratories, Inc., 14225 Newbrook Dr., Chantilly, VA 20151, 703–802–6900

Associated Pathologists Laboratories, Inc., 4230 South Burnham Ave., Suite 250, Las Vegas, NV 89119–5412, 702–733–7866/800–433–2750

Baptist Medical Center—Toxicology Laboratory, 9601 I–630, Exit 7, Little Rock, AR 72205–7299, 501–202–2783 (Formerly: Forensic Toxicology Laboratory Baptist Medical Center)

Clinical Laboratory Partners, LLC, 129 East Cedar St., Newington, CT 06111, 860–696–8115 (Formerly: Hartford Hospital Toxicology Laboratory)

Clinical Reference Lab, 8433 Quivira Rd., Lenexa, KS 66215–2802, 800–445–6917

Cox Health Systems, Department of Toxicology, 1423 North Jefferson Ave., Springfield, MO 65802, 800–876–3652/417–269–3093 (Formerly: Cox Medical Centers)

Diagnostic Services Inc., dba DSI, 12700 Westlinks Drive, Fort Myers, FL 33913, 941–561–8200/800–735–5416

Doctors Laboratory, Inc., P.O. Box 2658, 2906 Julia Dr., Valdosta, GA 31602, 912–244–4468

DrugProof, Divison of Dynacare, 543 South Hull St., Montgomery, AL 36103, 888–777–9497/334–241–0522 (Formerly: Alabama Reference Laboratories, Inc.)

DrugProof, Division of Dynacare/Laboratory of Pathology, LLC, 1229 Madison St., Suite 500, Nordstrom Medical Tower, Seattle, WA 98104, 206–386–2672/800–898–0180 (Formerly: Laboratory of Pathology of Seattle, Inc., DrugProof, Division of Laboratory of Pathology of Seattle, Inc.)

DrugScan, Inc., P.O. Box 2969, 1119 Mearns Rd., Warminster, PA 18974, 215–674–9310

Dynacare Kasper Medical Laboratories *, 14940–123 Ave., Edmonton, Alberta, Canada T5V 1B4, 780–451–3702/800–661–9876

ElSohly Laboratories, Inc., 5 Industrial Park Dr., Oxford, MS 38655, 662–236–2609

Express Analytical Labs, 3405 7th Avenue, Suite 106, Marion, IA 52302, 319–377–0500

Gamma-Dynacare Medical Laboratories *, A Division of the Gamma-Dynacare Laboratory Partnership, 245 Pall Mall St., London, ONT, Canada N6A 1P4, 519–679–1630

General Medical Laboratories, 36 South Brooks St., Madison, WI 53715, 608–267–6267

Kroll Laboratory Specialists, Inc., 1111 Newton St., Gretna, LA 70053, 504–361–8989/800–433–3823 (Formerly: Laboratory Specialists, Inc.)

LabOne, Inc., 10101 Renner Blvd., Lenexa, KS 66219, 913–888–3927/800–728–4064 (Formerly: Center for Laboratory Services, a Division of LabOne, Inc.)

Laboratory Corporation of America Holdings, 7207 N. Gessner Road, Houston, TX 77040, 713–856–8288/800–800–2387

Laboratory Corporation of America Holdings, 69 First Ave., Raritan, NJ 08869, 908–526–2400/800–437–4986 (Formerly: Roche Biomedical Laboratories, Inc.)

Laboratory Corporation of America Holdings, 1904 Alexander Drive, Research Triangle Park, NC 27709, 919–572–6900/800–833–3984 (Formerly: LabCorp Occupational Testing Services, Inc., CompuChem Laboratories, Inc.; CompuChem Laboratories, Inc., A Subsidiary of Roche Biomedical Laboratory; Roche CompuChem Laboratories, Inc., A Member of the Roche Group)

Laboratory Corporation of America Holdings, 10788 Roselle Street, San Diego, CA 92121, 800–882–7272 (Formerly: Poisonlab, Inc.)

Laboratory Corporation of America Holdings, 1120 Stateline Road West, Southaven, MS 38671, 866–827–8042/800–233–6339 (Formerly: LabCorp Occupational Testing Services, Inc., MedExpress/National Laboratory Center)

Marshfield Laboratories, Forensic Toxicology Laboratory, 1000 North Oak Ave., Marshfield, WI 54449, 715–389–3734/800–331–3734

MAXXAM Analytics Inc.*, 5540 McAdam Rd., Mississauga, ON, Canada L4Z 1P1, 905–890–2555 (Formerly: NOVAMANN (Ontario) Inc.)

Medical College Hospitals Toxicology Laboratory, Department of Pathology, 3000 Arlington Ave., Toledo, OH 43699, 419–383–5213

MedTox Laboratories, Inc., 402 W. County Rd. D, St. Paul, MN 55112, 651–636–7466/800–832–3244

MetroLab-Legacy Laboratory Services, 1225 NE 2nd Ave., Portland, OR 97232, 503–413–5295/800–950–5295

Minneapolis Veterans Affairs Medical Center, Forensic Toxicology Laboratory, 1 Veterans Drive, Minneapolis, Minnesota 55417, 612–725–2088

National Toxicology Laboratories, Inc., 1100 California Ave., Bakersfield, CA 93304, 661–322–4250/800–350–3515

Northwest Drug Testing, a division of NWT Inc., 1141 E. 3900 South, Salt Lake City, UT 84124, 801–293–2300/800–322–3361 (Formerly: NWT Drug Testing, NorthWest Toxicology, Inc.)

One Source Toxicology Laboratory, Inc., 1705 Center Street, Deer Park, TX 77536, 713–920–2559 (Formerly: University of Texas Medical Branch, Clinical Chemistry Division; UTMB Pathology-Toxicology Laboratory)

Oregon Medical Laboratories, P.O. Box 972, 722 East 11th Ave., Eugene, OR 97440–0972, 541–687–2134

Pacific Toxicology Laboratories, 6160 Variel Ave., Woodland Hills, CA 91367, 818–598–3110/800–328–6942 (Formerly: Centinela Hospital Airport Toxicology Laboratory)

Pathology Associates Medical Laboratories, 110 West Cliff Drive, Spokane, WA 99204, 509–755–8991/800–541–7891x8991

PharmChem Laboratories, Inc., 4600 N. Beach, Haltom City, TX 76137, 817–605–5300 (Formerly: PharmChem Laboratories, Inc., Texas Division; Harris Medical Laboratory)

Physicians Reference Laboratory, 7800 West 110th St., Overland Park, KS 66210, 913–339–0372/800–821–3627

Quest Diagnostics Incorporated, 3175 Presidential Dr., Atlanta, GA 30340, 770–452–1590 (Formerly: SmithKline Beecham Clinical Laboratories, SmithKline Bio-Science Laboratories)

Quest Diagnostics Incorporated, 4770 Regent Blvd., Irving, TX 75063, 800–842–6152 (Moved from the Dallas location on 03/31/01; Formerly: SmithKline Beecham Clinical Laboratories, SmithKline Bio-Science Laboratories)

Quest Diagnostics Incorporated, 400 Egypt Rd., Norristown, PA 19403, 610–631–4600/877–642–2216 (Formerly: SmithKline Beecham Clinical Laboratories, SmithKline Bio-Science Laboratories)

Quest Diagnostics Incorporated, 506 E. State Pkwy., Schaumburg, IL 60173, 800–669–6995/847–885–2010 (Formerly: SmithKline Beecham Clinical Laboratories, International Toxicology Laboratories)

Quest Diagnostics Incorporated, 7470 Mission Valley Rd., San Diego, CA 92108–4406, 619–686–3200/800–446–4728 (Formerly: Nichols Institute, Nichols Institute Substance Abuse Testing (NISAT), CORNING Nichols Institute, CORNING Clinical Laboratories)

Quest Diagnostics Incorporated, 7600 Tyrone Ave., Van Nuys, CA 91405, 818–989–2520/800–877–2520 (Formerly: SmithKline Beecham Clinical Laboratories)

Scientific Testing Laboratories, Inc., 463 Southlake Blvd., Richmond, VA 23236, 804–378–9130

S.E.D. Medical Laboratories, 5601 Office Blvd., Albuquerque, NM 87109, 505–727–6300/800–999–5227

South Bend Medical Foundation, Inc., 530 N. Lafayette Blvd., South Bend, IN 46601, 219–234–4176

Southwest Laboratories, 2727 W. Baseline Rd., Tempe, AZ 85283, 602–438–8507/800–279–0027

Sparrow Health System, Toxicology Testing Center, St. Lawrence Campus, 1210 W. Saginaw, Lansing, MI 48915, 517–377–0520 (Formerly: St. Lawrence Hospital & Healthcare System)

St. Anthony Hospital Toxicology Laboratory, 1000 N. Lee St., Oklahoma City, OK 73101, 405–272–7052

Toxicology & Drug Monitoring Laboratory, University of Missouri Hospital & Clinics, 2703 Clark Lane, Suite B, Lower Level, Columbia, MO 65202, 573–882–1273

Toxicology Testing Service, Inc., 5426 N.W. 79th Ave., Miami, FL 33166, 305–593–2260

Universal Toxicology Laboratories (Florida), LLC, 5361 NW 33rd Avenue, Fort Lauderdale, FL 33309, 954–717–0300, 800–419–7187x419 (Formerly: Integrated Regional Laboratories, Cedars Medical Center, Department of Pathology)

Universal Toxicology Laboratories, LLC, 9930 W. Highway 80, Midland, TX 79706, 915–561–8851/888–953–8851

U.S. Army Forensic Toxicology Drug Testing Laboratory, Fort Meade, Building 2490, Wilson Street, Fort George G. Meade, MD 20755–5235, 301–677–7085

* The Standards Council of Canada (SCC) voted to end its Laboratory Accreditation Program for Substance Abuse (LAPSA) effective May 12, 1998. Laboratories certified through that program were accredited to conduct forensic urine drug testing as required by U.S. Department of Transportation (DOT) regulations. As of that date, the certification of those accredited Canadian laboratories will continue under DOT authority. The responsibility for conducting quarterly performance testing plus periodic on-site inspections of those LAPSA-accredited laboratories was transferred to the U.S. DHHS, with the DHHS' National Laboratory Certification Program (NLCP) contractor continuing to have an active role in the performance testing and laboratory inspection processes. Other Canadian laboratories wishing to be considered for the NLCP may apply directly to the NLCP contractor just as U.S. laboratories do.

Upon finding a Canadian laboratory to be qualified, the DHHS will recommend that DOT certify the laboratory (Federal Register, 16 July 1996) as meeting the minimum standards of the ''Mandatory Guidelines for Workplace Drug Testing'' (59 FR, 9 June 1994, Pages 29908–29931). After receiving the DOT certification, the laboratory will be included in the monthly list of DHHS certified laboratories and participate in the NLCP certification maintenance program.

Richard Kopanda,

Executive Officer, Substance Abuse and Mental Health Services Administration.

[FR Doc. 02–2315 Filed 1–31–02; 8:45 am]

BILLING CODE 4160–20–P

DEPARTMENT OF HOUSING AND URBAN DEVELOPMENT

[Docket No. FR–4730–N–05]

Federal Property Suitable as Facilities To Assist the Homeless

AGENCY: Office of the Assistant Secretary for Community Planning and Development, HUD.

ACTION: Notice.

SUMMARY: This notice identifies unutilized, underutilized, excess, and surplus Federal property reviewed by HUD for suitability for possible use to assist the homeless.

FOR FURTHER INFORMATION CONTACT: Mark Johnston, room 7266, Department of Housing and Urban Development, 451 Seventh Street, SW., Washington, DC 20410; telephone (202) 708–1234; TTY number for the hearing- and speech-impaired, (202) 708–2565 (these telephone numbers are not toll-free), or call the toll-free Title V information line at 1–800–927–7588.

SUPPLEMENTARY INFORMATION: In accordance with 24 CFR part 581 and section 501 of the Stewart B. McKinney Homeless Assistance Act (42 U.S.C. 11411), as amended, HUD is publishing this Notice to identify Federal buildings and other real property that HUD has reviewed for suitability for use to assist the homeless. The properties were reviewed using information provided to HUD by Federal landholding agencies regarding unutilized and underutilized buildings and real property controlled by such agencies or by GSA regarding its inventory of excess or surplus Federal property. This Notice is also published in order to comply with the December 12, 1988 Court Order in *National Coalition for the Homeless* v. *Veterans Administration,* No. 88–2503–OG (D.D.C.).

Properties reviewed are listed in this Notice according to the following categories: Suitable/available, suitable/unavailable, suitable/to be excess, and unsuitable. The properties listed in the three suitable categories have been reviewed by the landholding agencies, and each agency has transmitted to HUD: (1) Its intention to make the property available for use to assist the homeless, (2) its intention to declare the property excess to the agency's needs, or (3) a statement of the reasons that the property cannot be declared excess or made available for use as facilities to assist the homeless.

Properties listed as suitable/available will be available exclusively for homeless use for a period of 60 days from the date of this Notice. Where

property is described as for ''off-site use only'' recipients of the property will be required to relocate the building to their own site at their own expense. Homeless assistance providers interested in any such property should send a written expression of interest to HHS, addressed to Brian Rooney, Division of Property Management, Program Support Center, HHS, room 5B–41, 5600 Fishers Lane, Rockville, MD 20857; (301) 443–2265. (This is not a toll-free number.) HHS will mail to the interested provider an application packet, which will include instructions for completing the application. In order to maximize the opportunity to utilize a suitable property, providers should submit their written expressions of interest as soon as possible. For complete details concerning the processing of applications, the reader is encouraged to refer to the interim rule governing this program, 24 CFR part 581.

For properties listed as suitable/to be excess, that property may, if subsequently accepted as excess by GSA, be made available for use by the homeless in accordance with applicable law, subject to screening for other Federal use. At the appropriate time, HUD will publish the property in a Notice showing it as either suitable/available or suitable/unavailable.

For properties listed as suitable/unavailable, the landholding agency has decided that the property cannot be declared excess or made available for use to assist the homeless, and the property will not be available.

Properties listed as unsuitable will not be made available for any other purpose for 20 days from the date of this Notice. Homeless assistance providers interested in a review by HUD of the determination of unsuitability should call the toll free information line at 1–800–927–7588 for detailed instructions or write a letter to Mark Johnston at the address listed at the beginning of this Notice. Included in the request for review should be the property address (including zip code), the date of publication in the **Federal Register**, the landholding agency, and the property number.

For more information regarding particular properties identified in this Notice (*i.e.,* acreage, floor plan, existing sanitary facilities, exact street address), providers should contact the appropriate landholding agencies at the following addresses: DOT: Mr. Rugene Spruill, Space Management, SVC–140, Transportation Administrative Service Center, Department of Transportation 400 7th Street, SW., Room 2310, Washington, DC 20590; (202) 366–4246; ENERGY: Mr. Tom Knox, Department of Energy, Office of Engineering & Construction Management, CR–80, Washington, DC 20585; (202) 586–8715; NAVY: Mr. Charles C. Cocks, Director, Department of the Navy, Real Estate Policy Division, Naval Facilities Engineering Command, Washington Navy Yard, 1322 Patterson Ave., SE., Suite 1000, Washington, DC 20374–5065; (202) 685–9200; (These are not toll-free numbers).

Dated: January 24, 2002.

John D. Garrity,

Directors, Office of Special Needs, Assistance Programs.

TITLE V, FEDERAL SURPLUS PROPERTY PROGRAM FEDERAL REGISTER REPORT FOR 2/1/02

Unsuitable Properties

Buildings (by State)

Alaska

Bldgs. T03, T04, 002
Loran Station
Kodiak Co: Kodiak Island AK 99619–
Landholding Agency: DOT
Property Number: 87200210006
Status: Excess
Reason: Extensive deterioration

California

Bldg. PM54
Naval Air Station
Point Mugu Co: Ventura CA 93042–5000
Landholding Agency: Navy
Property Number: 77200210001
Status: Unutilized
Reason: Extensive deterioration

Bldg. PM56
Naval Air Station
Point Mugu Co: Ventura CA 93042–5000
Landholding Agency: Navy
Property Number: 77200210002
Status: Unutilized
Reason: Extensive deterioration

Bldg. PM754
Naval Air Station
Point Mugu Co: Ventura CA 93042–5000
Landholding Agency: Navy
Property Number: 77200210003
Status: Unutilized
Reason: Extensive deterioration

Bldg. PM777
Naval Air Station
Point Mugu Co: Ventura CA 93042–5000
Landholding Agency: Navy
Property Number: 77200210004
Status: Unutilized
Reason: Extensive deterioration

Bldg. PM7007
Naval Air Station
Point Mugu Co: Ventura CA 93042–5000
Landholding Agency: Navy
Property Number: 77200210005
Status: Unutilized
Reason: Extensive deterioration

Bldg. 303
Naval Weapons Station
Fallbrook Co: CA 92028–3187
Landholding Agency: Navy
Property Number: 77200210006
Status: Unutilized
Reason: Extensive deterioration

Bldg. 1233
Marine Corps Base
Camp Pendleton Co: CA 92055–
Landholding Agency: Navy
Property Number: 77200210007
Status: Excess
Reason: Extensive deterioration

Bldg. 1345
Marine Corps Base
Camp Pendleton Co: CA 92055–
Landholding Agency: Navy
Property Number: 77200210008
Status: Excess
Reason: Extensive deterioration

Bldg. 1643
Marine Corps Base
Camp Pendleton Co: CA 92055–
Landholding Agency: Navy
Property Number: 77200210009
Status: Excess
Reason: Extensive deterioration

Bldg. 1644
Marine Corps Base
Camp Pendleton Co: CA 92055–
Landholding Agency: Navy
Property Number: 77200210010
Status: Excess
Reason: Extensive deterioration

Bldg. 1672
Marine Corps Base
Camp Pendleton Co: CA 92055–
Landholding Agency: Navy
Property Number: 77200210011
Status: Excess
Reason: Extensive deterioration

Bldg. 1673
Marine Corps Base
Camp Pendleton Co: CA 92055–
Landholding Agency: Navy
Property Number: 77200210012
Status: Excess
Reason: Extensive deterioration

Bldg. 2669
Marine Corps Base
Camp Pendleton Co: CA 92055–
Landholding Agency: Navy
Property Number: 77200210013
Status: Excess
Reason: Extensive deterioration

Bldg. 13116
Marine Corps Base
Camp Pendleton Co: CA 92055–
Landholding Agency: Navy
Property Number: 77200210014
Status: Excess
Reason: Extensive deterioration

Bldg. 6
Navy Marine Corps Rsv Ctr
Sacramento Co: CA 95828–
Landholding Agency: Navy
Property Number: 77200210017
Status: Unutilized
Reason: Secured Area

Bldg. 30
Coast Guard Group
One Yerba Buena Island
San Francisco Co: CA 94118–
Landholding Agency: DOT
Property Number: 87200210007
Status: Underutilized
Reasons: Within 2000 ft. of flammable or explosive material; Secured Area

Bldg. 40
Coast Guard Group
One Yerba Buena Island
San Francisco Co: CA 94118–
Landholding Agency: DOT
Property Number: 87200210008
Status: Unutilized
Reasons: Within 2000 ft. of flammable or explosive material; Secured Area

Bldg. 75
Coast Guard Group
One Yerba Buena Island
San Francisco Co: CA 94118–
Landholding Agency: DOT
Property Number: 87200210009
Status: Underutilized
Reasons: Within 2000 ft. of flammable or explosive material; Secured Area

Bldg. 270
Coast Guard Group
One Yerba Buena Island
San Francisco Co: CA 94118–
Landholding Agency: DOT
Property Number: 87200210010
Status: Unutilized
Reasons: Within 2000 ft. of flammable or explosive material; Secured Area

Pennsylvania

Bldg. 43
Naval Foundry & Propeller Center
Philadelphia Co: PA 19112–
Landholding Agency: Navy
Property Number: 77200210015
Status: Excess
Reason: Extensive deterioration

Bldg. 53
Naval Foundry & Propeller Center
Philadelphia Co: PA 19112–
Landholding Agency: Navy
Property Number: 77200210016
Status: Excess
Reason: Extensive deterioration.

Tennessee

Bldg. 9949–31
Y–12 Natl Security Complex
Oak Ridge Co: Anderson TN 37831–
Landholding Agency: Energy
Property Number: 41200210001
Status: Unutilized
Reason: Secured Area

Bldg. SC–14
ORISE Scarboro Operations Site
Oak Ridge Co: Anderson TN 37831–
Landholding Agency: Energy
Property Number: 41200210002
Status: Excess
Reason: Secured Area

[FR Doc. 02–2178 Filed 1–31–02; 8:45 am]

BILLING CODE 4210–29–M

DEPARTMENT OF THE INTERIOR

Office of the Secretary

Bureau of Land Management

Fish and Wildlife Service

Resubmission of Comments; Interruption of Mail Service

AGENCY: Fish and Wildlife Service and the Bureau of Land Management.

ACTION: Resubmission of comments on specific notices.

SUMMARY: The Office of the Secretary, along with the Fish and Wildlife Service and the Bureau of Land Management give notice to the public of the opportunity to resubmit comments on specific notices. This action is necessitated by the possibility that some comments that were submitted by the public in response to notices may not have been timely received by the identified bureaus due to the shutdown of the Brentwood Postal Facility in Washington, DC, on October 21, 2001. The postal facility was closed because of the threat of anthrax contamination. This action is also necessitated because the Department's internet access, including receipt of outside e-mail, has been shut down under court order until further notice. Comments which may have been sent to the Department by email since December 4, 2001, have not been received by the Department and should be resubmitted by mail to the addresses specified herein.

DATES: Resubmittal of comments on identified notices must be postmarked no later than February 15, 2002.

ADDRESSES: The addresses for the resubmittal of comments are as follows:

- Fish and Wildlife Service, 4401 North Fairfax Drive, Office of Policy, Directives and Management, Arlington, VA 22203, unless otherwise noted.
- Bureau of Land Management, Eastern States Office, 7450 Boston Blvd., Springfield, VA 22135, unless otherwise noted.

FOR FURTHER INFORMATION CONTACT: Duncan L. Brown, Office of the Secretary, Washington, DC, 202/208–4582.

SUPPLEMENTARY INFORMATION: The purpose of this document is to allow interested parties the opportunity to resubmit comments they may have sent to the Washington, DC, offices of the Fish and Wildlife Service and the Bureau of Land Management on certain identified notices. This action is taken due to the closure of the Brentwood Postal Facility, Washington, DC, has caused a delay in the delivery of mail to the Department's Washington, DC, agency addresses. In addition, the Department's internet access, including receipt of outside email, has been shut down under court order until further notice and comments which were sent by email to the Department by email since December 4, 2001, have not been received by the Department. To guarantee the collection of all responsive comments, the Department has decided that it will extend to all interested parties the opportunity to resubmit their written comments on the identified notices to the agency addresses identified in the **ADDRESSES** section of this document. The affected notices are identified as follows:

Notices

FWS Light Goose Management—Availability of DEIS
FWS ESA Permit Applications
FWS ESA/MMPA Permit Applications
FWS Availability of EA/Application for ITP—Deltona, Florida, Florida Scrub-Jay, Eastern Indigo Snake
FWS Availability of EA/HCP/Application for ITP—Interagency Task Force—Six Points Road, Indiana
FWS ITP—Houston Toad—Lower Colorado River Authority
FWS Availability of Draft EA/CCP for Salinas River NWR
FWS Wild Bird Conservation Act Permit Application
FWS Preparation of EIS for South Subregion NCCP/HCP—Orange County, CA
FWS Incidental Take Permit Request, Houston Toad
FWS Receipt of Application for ITP—Palmas del Mar, PR
FWS Availability of CCP/EA for Antioch Dunes NWR
FWS Availability of Draft EA, June Sucker Recovery Plan
FWS Availability of CCP/EA for Seedskadee NWR
FWS Availability of of EA/HCP; ITP Application—Golf Highlands/Fort Morgan—Turtles and Beach mouse
FWS Availability of CCAA—Georgia Power—Robust Redhorse
FWS Availability of Draft EA/RP for Charles George Landfill Superfund Site
FWS Availability of Draft EA/Application for Incidental Take—Pinery Glen, CO
FWS Availability of EA/Receipt of Application for Incidental Take—Riverside Fairy Shrimp—Redhawk
FWS Application to Amend West Fork Timber Incidental Take Permit—Canada Lynx/Bull Trout
FWS Availability of EA/HCP—Bald Eagles—The Woodlands, Texas
FWS Draft EIS—Light Goose Management
FWS Draft Southwestern Willow Flycatcher Recovery Plan—Reopening of Comment Period
FWS PRA—Employee Exit Survey (Former Employees)
FWS Intent to Prepare Comp. Conservation

Plan/NEPA Document—Sacramento River NWR
FWS Intent to Prepare EIS/Scoping Meeting—Roosevelt HCP
FWS Availability of Draft Recovery Plan—Pacific Coast Population of Western Snowy Plover
FWS PRA—Marine Mammals—Incidental Take
FWS Intent to Prepare Comp. Conservation Plans—Arrowwood and Sand Lake NWRs
FWS Availability of Draft EA/Incidental Take Permit Applications, Flaglere County, Florida
FWS Intent to Prepare EIS/EIR—South Subregion Natural Community Conservation Plan/HCP, Orange County, CA
FWS Preparation of EIS/EIS—W. Riverside County HCP
FWS Submission—Refuge Special Use Permits
FWS Environmental Assessment—Major Amendment to San Diego Subarea Plan for Multiple Species Conservation Program Plan
FWS Status Review—Wasatch Front Population of the spotted frog
FWS PRA—State Certification of Expenditures
FWS Sonoran Pronghorn Recovery Plan—Criteria and Time Estimate for Recovery
FWS Availability of Proposed Peregrine Falcon Monitoring Plan
FWS Availability of EIS/Safe Harbor Application—San Joaquin Kit Fox
FWS Availability of EIS on Light Goose Management
FWS Availability of Draft CCP/EA—Necedah NWR, WI
FWS Availability of Draft Implementation Plan for Falconry Take of Nestling Peregrine Falcons
FWS Reopening of Comment Period—4 Colorado Basin Endangered Fish Species
FWS Availability of Draft EA for Mandalay Bank Protection Project, LA
FWS Intent to Prepare Comp. Conservation Plan/NEPA Document—Sacramento River NWR
FWS Intent to Prepare EIS/Scoping Meeting—Roosevelt HCP
FWS Availability of Draft Recovery Plan—Pacific Coast Population of Western Snowy Plover
FWS PRA—Marine Mammals—Incidental Take
FWS Availability of Draft EA/Incidental Take Permit Application, Flagler County, Florida
FWS Intent to Prepare EIS/EIR—South Subregion Natural Community Conservation Plan/HCP, Orange County, CA
FWS Preparation of EIS/EIR—W. Riverside County HCP
FWS PRA Submission—Refuge Special Use Permits
FWS Environmental Assessment—Major Amendments to San Diego Subarea Plan for Multiple Species Conservation Program Plan
FWS Status Review—Wasatch Front Population of the spotted frog
FWS PRA—State Certification of Expenditures
BLM Availability and Protest Period for Planning Analysis/EA for Lands in Arkansas and Louisiana
BLM Availability of FEIS for Pueblo of San Felipe Land Exchange
BLM Availability and Protest Period for Proposed Planning Analysis to Acquire Land in Fairfax County, Virginia by BLM
BLM Availability of Proposed Southeastern Oregon RMP and FEIS and Proposed Area of Critical Environmental Concern Designations
BLM Cadiz Groundwater Storage and Dry-Year Supply Program FEIS (EPA Notice published October 5, 2001)

Dated: January 15, 2002.

P. Lynn Scarlett,

Assistant Secretary—Policy Management and Budget.

[FR Doc. 02–2468 Filed 1–31–02; 8:45 am]

BILLING CODE 4310–RK–M

DEPARTMENT OF THE INTERIOR

Fish and Wildlife Service

Notice of Intent To Prepare Comprehensive Conservation Plan and Environmental Impact Statement for the Great Dismal Swamp National Wildlife Refuge

SUMMARY: This amends the previous Notice of Intent published October 9, 2001. This notice advises the public that the U.S. Fish and Wildlife Service (Service) intends to gather information necessary to prepare a Comprehensive Conservation Plan (CCP) and Environmental Impact Statement (EIS) pursuant to the National Environmental Policy Act (NEPA) of 1969, and its implementing regulations. A CCP will be prepared for the Great Dismal Swamp National Wildlife Refuge (NWR) located in Suffolk and Chesapeake, Virginia and Gates and Camden Counties, North Carolina and the Nansemond Refuge Unit located within the City of Suffolk, Virginia. A Wilderness Review of Great Dismal Swamp NWR will also be completed concurrently in accordance with the Wilderness Act of 1964, as amended and Refuge Planning policy 602 FW Chapters 1, 2, and 3. The Service is furnishing this notice in compliance with the National Wildlife Refuge System Administration Act of 1966, as amended (16 U.S.C. 668dd *et seq.*): (1) To advise other agencies and the public of our intentions, and (2) to obtain suggestions and information on the scope of issues to include in the EIS. Times and dates for public scoping meetings are identified below and will remain the same as those published in the previous notice.

DATES: Please submit comments on the Draft CCP and EIS on or before March 1, 2002.

ADDRESSES: Please submit comments on the Draft CCP and EIS to Refuge Manager, Great Dismal Swamp National Wildlife Refuge, PO Box 349, Suffolk, VA 23439–0349.

FOR MORE INFORMATION CONTACT: Refuge Manager, Great Dismal Swamp National Wildlife Refuge, PO Box 349, Suffolk, VA 23439–0349 at 757–986–3706.

SUPPLEMENTARY INFORMATION: By Federal law, all lands within the National Wildlife Refuge System are to be managed in accordance with an approved CCP. The CCP guides management decisions and identifies refuge goals, long-range objectives, and strategies for achieving refuges' purposes. The planning process will consider many elements including habitat and wildlife management, habitat protection and acquisition, public uses, and cultural resources. Public input into this planning process is essential. The CCP will provide other agencies and the public with a clear understanding of the desired conditions for the refuges and how the Service will impact management strategies. The Service will solicit public input via open houses, public meetings, workshops, and written comments. Special mailings, newspaper articles, and announcements will inform people of the time and place of such opportunities for public input to the CCP. The Great Dismal Swamp NWR encompasses some 109,000 acres of marshes, wooded wetlands/swamps, and open water. Comments on the protection of threatened and endangered species and migratory birds and the protection and management of their habitat will be solicited as part of the planning process. A Draft CCP and Draft EIS are planned for public review by December 2002. Review of the project will be conducted in accordance with the requirements of NEPA, as amended (42 U.S.C. 4321 *et seq.*), NEPA Regulations (40 CFR parts 1500–1508), other appropriate Federal laws and regulations, and Service policies and procedures for compliance with those regulations.

Dated: December 6, 2001.

Richard O. Bennett,

Acting Regional Director, U.S. Fish and Wildlife Service, Hadley, Massachusetts.

[FR Doc. 02–2088 Filed 1–31–02; 8:45 am]

BILLING CODE 4310–55–P

DEPARTMENT OF THE INTERIOR

Fish and Wildlife Service

Meeting of the Klamath River Basin Fisheries Task Force

AGENCY: Fish and Wildlife Service, Interior.

ACTION: Notice of meeting.

SUMMARY: Pursuant to section 10(a)(2) of the Federal Advisory Committee Act (5 U.S.C. App. I), this notice announces a meeting of the Klamath River Basin Fisheries Task Force, established under the authority of the Klamath River Basin Fishery Resources Restoration Act (16 U.S.C. 460ss *et seq.*). The meeting is open to the public. The purpose of the meeting is to continue providing recommendations from the affected interests to the Department of the Interior on implementation of their program to restore anadromous fisheries, including salmon and steelhead, of the Klamath River in California and Oregon.

DATES: The Klamath River Basin Fisheries Task Force (Task Force) will meet from 9 a.m. to 5 p.m. on February 6, 2002, and from 8 a.m. to 5 p.m. on February 7, 2002.

ADDRESSES: The meeting will be held at the Ship Ashore Resort, 12370 Highway 101 North, Smith River, CA.

FOR FURTHER INFORMATION CONTACT: Phil Detrich, Project Leader, U.S. Fish and Wildlife Service, 1829 South Oregon Street, Yreka, California 96097, telephone (530) 842–5763.

SUPPLEMENTARY INFORMATION: For background information on the Task Force, please refer to the notice of their initial meeting that appeared in the **Federal Register** on July 8, 1987 (52 FR 25639).

Dated: January 25, 2002.

Miel R. Corbett,

Acting California/Nevada Operations Manager, California/Nevada Office, Fish and Wildlife Service.

[FR Doc. 02–2457 Filed 1–31–02; 8:45 am]

BILLING CODE 4310–55–P

DEPARTMENT OF THE INTERIOR

National Park Service

Acadia National Park, Bar Harbor, ME; Acadia National Park Advisory Commission; Notice of Meeting

Notice is hereby given in accordance with the Federal Advisory Committee Act (Public Law 92–463, 86 Stat. 770, 5 U.S.C. App. 1, Sec. 10), that the Acadia National Park Advisory Commission will hold a meeting on Monday, February 4, 2002.

The Commission was established pursuant to Public Law 99–420, Sec. 103. The purpose of the commission is to consult with the Secretary of the Interior, of his designee, on matters relating to the management and development of the park, including but not limited to the acquisition of lands and interests in lands (including conservation easements on islands) and termination of rights of use and occupancy.

The meeting will convene at park Headquarters, McFarland Hill, Bar Harbor, Maine, at 1 P.M. to consider the following agenda:

1. Review and approval of minutes from the meeting held September 10, 2001
2. Committee reports:
—Land Conservation
   A. Proposed Milliken conservation easement, Long Cove, Indian Point, Bar Harbor
   B. Proposed Rhoads conservation easement, Birch Island, Vinalhaven
—Park Use
—Science
3. Old business
4. Superintendent's report
5. Public comments
6. Proposed agenda for next Commission meeting, June 3, 2002

The meeting is open to the public. Interested persons may make oral/written presentations to the Commission or file written statements. Such requests should be made to the Superintendent at least seven days prior to the meeting.

Further information concerning this meeting may be obtained from the Superintendent, Acadia National Park, P.O. Box 177, Bar Harbor, Maine 04609, tel: (207) 288–3338.

Dated: January 11, 2001.

Len Bobinchock,

Acting Superintendent, Acadia National Park.

[FR Doc. 02–2483 Filed 1–31–02; 8:45 am]

BILLING CODE 4310–70–M

INTERNATIONAL TRADE COMMISSION

[Investigations Nos. 701–TA–416 (Final) and 731–TA–948 (Final)]

Individually Quick Frozen Red Raspberries From Chile

AGENCY: United States International Trade Commission.

ACTION: Scheduling of the final phase of countervailing duty and antidumping investigations.

SUMMARY: The Commission hereby gives notice of the scheduling of the final phase of countervailing duty investigation No. 701–TA–416 (Final) under section 705(b) of the Tariff Act of 1930 (19 U.S.C. 1671d(b)) (the Act) and the final phase of antidumping investigation No. 731–TA–948 (Final) under section 735(b) of the Act (19 U.S.C. 1673d(b)) to determine whether an industry in the United States is materially injured or threatened with material injury, or the establishment of an industry in the United States is materially retarded, by reason of subsidized and less-than-fair-value imports from Chile of individually quick frozen (''IQF'') red raspberries, provided for in subheading 0811.20.20 of the Harmonized Tariff Schedule of the United States.[1]

For further information concerning the conduct of this phase of the investigations, hearing procedures, and rules of general application, consult the Commission's Rules of Practice and Procedure, part 201, subparts A through E (19 CFR part 201), and part 207, subparts A and C (19 CFR part 207).

EFFECTIVE DATE: December 31, 2001.

FOR FURTHER INFORMATION CONTACT: Fred Ruggles (202–205–3187), Office of Investigations, U.S. International Trade Commission, 500 E Street SW, Washington, DC 20436. Hearing-impaired persons can obtain information on this matter by contacting the Commission's TDD terminal on 202–205–1810. Persons with mobility impairments who will need special assistance in gaining access to the Commission should contact the Office of the Secretary at 202–205–2000. General information concerning the Commission may also be obtained by accessing its internet server, *http://www.usitc.gov.* The public record for this investigation may be viewed on the Commission's electronic docket (EDIS–ON–LINE) at *http://dockets.usitc.gov/eol/public.*

SUPPLEMENTARY INFORMATION:

Background

The final phase of these investigations is being scheduled as a result of an affirmative preliminary determination by the Department of Commerce that such products are being sold in the

[1] For purposes of these investigations, the Department of Commerce has defined the subject merchandise as individually quick frozen whole or broken red raspberries from Chile, with or without the addition of sugar or syrup, regardless of variety, grade, size, or horticulture method (*e.g.,* organic or not), the size of the container in which packed, or the method of packing. Excluded from the imported products subject to these investigations are fresh red raspberries and block frozen red raspberries (*i.e.,* puree, straight pack, juice stock, and juice concentrate).

United States at less than fair value within the meaning of section 733 of the Act (19 U.S.C. 1673b). (Commerce made a negative preliminary determination concerning whether certain benefits which constitute subsidies within the meaning of section 703 of the Act (19 U.S.C. 1671b) are being provided to manufacturers, producers, or exporters in Chile of IQF red raspberries.) The investigations were requested in a petition filed on May 31, 2001, by the IQF Red Raspberry Fair Trade Committee, Washington, DC.

Participation in the Investigations and Public Service List

Persons, including industrial users of the subject merchandise and, if the merchandise is sold at the retail level, representative consumer organizations, wishing to participate in the final phase of these investigations as parties must file an entry of appearance with the Secretary to the Commission, as provided in § 201.11 of the Commission's rules, no later than 21 days prior to the hearing date specified in this notice. A party that filed a notice of appearance during the preliminary phase of the investigations need not file an additional notice of appearance during this final phase. The Secretary will maintain a public service list containing the names and addresses of all persons, or their representatives, who are parties to the investigations.

Limited Disclosure of Business Proprietary Information (BPI) Under an Administrative Protective Order (APO) and BPI Service List

Pursuant to § 207.7(a) of the Commission's rules, the Secretary will make BPI gathered in the final phase of these investigations available to authorized applicants under the APO issued in the investigations, provided that the application is made no later than 21 days prior to the hearing date specified in this notice. Authorized applicants must represent interested parties, as defined by 19 U.S.C. 1677(9), who are parties to the investigations. A party granted access to BPI in the preliminary phase of the investigations need not reapply for such access. A separate service list will be maintained by the Secretary for those parties authorized to receive BPI under the APO.

Staff Report

The prehearing staff report in the final phase of these investigations will be placed in the nonpublic record on May 9, 2002, and a public version will be issued thereafter, pursuant to § 207.22 of the Commission's rules.

Hearing

The Commission will hold a hearing in connection with the final phase of these investigations beginning at 9:30 a.m. on May 23, 2002, at the U.S. International Trade Commission Building. Requests to appear at the hearing should be filed in writing with the Secretary to the Commission on or before May 13, 2002. A nonparty who has testimony that may aid the Commission's deliberations may request permission to present a short statement at the hearing. All parties and nonparties desiring to appear at the hearing and make oral presentations should attend a prehearing conference to be held at 9:30 a.m. on May 15, 2002, at the U.S. International Trade Commission Building. Oral testimony and written materials to be submitted at the public hearing are governed by §§ 201.6(b)(2), 201.13(f), and 207.24 of the Commission's rules. Parties must submit any request to present a portion of their hearing testimony *in camera* no later than 7 days prior to the date of the hearing.

Written Submissions

Each party who is an interested party shall submit a prehearing brief to the Commission. Prehearing briefs must conform with the provisions of § 207.23 of the Commission's rules; the deadline for filing is May 16, 2002. Parties may also file written testimony in connection with their presentation at the hearing, as provided in § 207.24 of the Commission's rules, and posthearing briefs, which must conform with the provisions of § 207.25 of the Commission's rules. The deadline for filing posthearing briefs is May 31, 2002; witness testimony must be filed no later than three days before the hearing. In addition, any person who has not entered an appearance as a party to the investigations may submit a written statement of information pertinent to the subject of the investigations on or before May 31, 2002. On June 13, 2002, the Commission will make available to parties all information on which they have not had an opportunity to comment. Parties may submit final comments on this information on or before June 17, 2002, but such final comments must not contain new factual information and must otherwise comply with § 207.30 of the Commission's rules. All written submissions must conform with the provisions of § 201.8 of the Commission's rules; any submissions that contain BPI must also conform with the requirements of §§ 201.6, 207.3, and 207.7 of the Commission's rules. The Commission's rules do not authorize filing of submissions with the Secretary by facsimile or electronic means.

In accordance with §§ 201.16(c) and 207.3 of the Commission's rules, each document filed by a party to the investigations must be served on all other parties to the investigations (as identified by either the public or BPI service list), and a certificate of service must be timely filed. The Secretary will not accept a document for filing without a certificate of service.

Authority: These investigations are being conducted under authority of title VII of the Tariff Act of 1930; this notice is published pursuant to § 207.21 of the Commission's rules.

By order of the Commission.

Issued: January 28, 2002.

Marilyn R. Abbott,

Acting Secretary.

[FR Doc. 02–2461 Filed 1–31–02; 8:45 am]

BILLING CODE 7020–02–P

INTERNATIONAL TRADE COMMISSION

[Investigations Nos. 701–TA–415 (Final) and 731–TA–933–9341 (Final)]

Polyethylene Terephthalate Film, Sheet, and Strip From India and Taiwan

AGENCY: United States International Trade Commission.

ACTION: Scheduling of the final phase of countervailing duty and antidumping investigations.

SUMMARY: The Commission hereby gives notice of the scheduling of the final phase of countervailing duty investigation No. 701–TA–415 (Final) under § 705(b) of the Tariff Act of 1930 (19 U.S.C. 1671d(b)) (the Act) and the final phase of antidumping investigations Nos. 731–TA–933–934 (Final) under § 735(b) of the Act (19 U.S.C. 1673d(b)) to determine whether an industry in the United States is materially injured or threatened with material injury, or the establishment of an industry in the United States is materially retarded, by reason of subsidized and imports from India, and less-than-fair-value imports from India and Taiwan, of polyethylene terephthalate film, sheet, and strip (PET film), provided for in subheading 3920.62.00 of the Harmonized Tariff Schedule of the United States.[1]

[1] For purposes of these investigations, the Department of Commerce has defined the subject merchandise as all guages of raw, pretreated, or primed PET film, whether extruded or coextruded.

Continued

For further information concerning the conduct of this phase of the investigations, hearing procedures, and rules of general application, consult the Commission's rules of practice and procedure, part 201, subparts A through E (19 CFR part 201), and part 207, subparts A and C (19 CFR part 207).

EFFECTIVE DATE: December 21, 2001.

FOR FURTHER INFORMATION CONTACT: Valerie Newkirk (202–205–3190), Office of Investigations, U.S. International Trade Commission, 500 E Street SW., Washington, DC 20436. Hearing-impaired persons can obtain information on this matter by contacting the Commission's TDD terminal on 202–205–1810. Persons with mobility impairments who will need special assistance in gaining access to the Commission should contact the Office of the Secretary at 202–205–2000. General information concerning the Commission may also be obtained by accessing its Internet server (*http://www.usitc.gov.)* The public record for these investigations may be viewed on the Commission's electronic docket (EDIS–ON–LINE) at *http://dockets.usitc.gov/eol/public.*

SUPPLEMENTARY INFORMATION:

Background

The final phase of these investigations is being scheduled as a result of affirmative preliminary determinations by the Department of Commerce that certain benefits which constitute subsidities within the meaning of § 703 of the Act (19 U.S.C. 1671b) are being provided to manufacturers, producers, or exporters in India of PET film, and that such products from India and Taiwan are being sold in the United States at less than fair value within the meaning of § 733 of the Act (19 U.S.C. 1673b). The investigations were requested in a petition filed on May 17, 2001, by DuPont Teijin Films, Wilmington, DE, Mitsubishi Polyester Film of America, Greer, SC, and Toray Plastics (America), Inc., North Kensington, RI.

Participation in the Investigations and Public Service List

Persons, including industrial users of the subject merchandise and, if the merchandise is sold at the retail level, representative consumer organizations, wishing to participate in the final phase of these investigations as parties must file an entry of appearance with the Secretary to the Commission, as provided in § 201.11 of the Commission's rules, no later than 21 days prior to the hearing date specified in this notice. A party that filed a notice of appearance during the preliminary phase of the investigations need not file an additional notice of appearance during this final phase. The Secretary will maintain a public service list containing the names and addresses of all persons, or their representatives, who are parties to the investigations.

Limited Disclosure of Business Proprietary Information (BPI) Under an Administrative Protective Order (APO) and BPI Service List

Pursuant to § 207.7(a) of the Commission's rules, the Secretary will make BPI gathered in the final phase of these investigations available to authorized applicants under the APO issued in the investigations, provided that the application is made no later than 21 days prior to the hearing date specified in this notice. Authorized applicants must represent interested parties, as defined by 19 U.S.C. 1677(9), who are parties to the investigations. A party granted access to BPI in the preliminary phase of the investigations need not reapply for such access. A separate service list will be maintained by the Secretary for those parties authorized to receive BPI under the APO.

Staff Report

The prehearing staff report in the final phase of these investigations will be placed in the nonpublic record on April 25, 2002, and a public version will be issued thereafter, pursuant to § 207.22 of the Commission's rules.

Hearing

The Commission will hold a hearing in connection with the final phase of these investigations beginning at 9:30 a.m. on May 9, 2002, at the U.S. International Trade Commission Building. Requests to appear at the hearing should be filed in writing with the Secretary to the Commission on or before May 2, 2002. A nonparty who has testimony that may aid the Commission's deliberations may request permission to present a short statement at the hearing. All parties and nonparties desiring to appear at the hearing and make oral presentations should attend a prehearing conference to be held at 9:30 a.m. on May 6, 2002, at the U.S. International Trade Commission Building. Oral testimony and written materials to be submitted at the public hearing are governed by §§ 201.6(b)(2), 201.13(f), and 207.24 of the Commission's rules. Parties must submit any request to present a portion of their hearing testimony *in camera* no later than 7 days prior to the date of the hearing.

Written Submissions

Each party who is an interested party shall submit a prehearing brief to the Commission. Prehearing briefs must conform with the provisions of § 207.23 of the Commission's rules; the deadline for filing is May 2, 2002. Parties may also file written testimony in connection with their presentation at the hearing, as provided in § 207.24 of the Commission's rules, and posthearing briefs, which must conform with the provisions of § 207.25 of the Commission's rules. The deadline for filing posthearing briefs is May 16, 2002; witness testimony must be filed no later than three days before the hearing. In addition, any person who has not entered an appearance as a party to the investigations may submit a written statement of information pertinent to the subject of the investigations on or before May 16, 2002. On June 3, 2002, the Commission will make available to parties all information on which they have not had an opportunity to comment. Parties may submit final comments on this information on or before June 5, 2002, but such final comments must not contain new factual information and must otherwise comply with § 207.30 of the Commission's rules. All written submissions must conform with the provisions of § 201.8 of the Commission's rules; any submissions that contain BPI must also conform with the requirements of §§ 201.6, 207.3, and 207.7 of the Commission's rules. The Commission's rules do not authorize filing of submissions with the Secretary by facsimile or electronic means.

In accordance with §§ 201.16(c) and 207.3 of the Commission's rules, each document filed by a party to the investigations must be served on all other parties to the investigations (as identified by either the public or BPI service list), and a certificate of service must be timely filed. The Secretary will not accept a document for filing without a certificate of service.

Authority: These investigations are being conducted under authority of title VII of the Tariff Act of 1930; this notice is published pursuant to § 207.21 of the Commission's rules.

Issued: January 28, 2002.

The scope excludes metallized films and other finished films that have had at least one of their surfaces modified by the application of a performance-enhancing resinous or inorganic layer of more than 0.00001 inch thick.

By order of the Commission.

Marilyn R. Abbott,

Acting Secretary.

[FR Doc. 02–2460 Filed 1–31–02; 8:45 am]

BILLING CODE 7020–02–P

DEPARTMENT OF JUSTICE

Immigration and Naturalization Service

[INS No. 2114–01; AG Order No. 2555–2002]

RIN 1115–AE26

Extension of the Designation of Angola Under Temporary Protected Status Program

AGENCY: Immigration and Naturalization Service, Justice.

ACTION: Notice.

SUMMARY: The designation of Angola under the Temporary Protected Status (TPS) Program will expire on March 29, 2002. This notice extends the Attorney General's designation of Angola for 12 months until March 29, 2003, and sets forth procedures necessary for nationals of Angola (or aliens having no nationality who last habitually resided in Angola) with TPS to re-register for the additional 12-month period. Registration is limited to persons who both registered under the initial designation (which ended on March 29, 2001) and also timely re-registered under the extension of designation, or registered under the redesignation (which ends March 29, 2002). Nationals of Angola (or aliens having no nationality who last habitually resided in Angola) who previously have not applied for TPS may be eligible to apply under the late initial registration provisions.

EFFECTIVE DATES: The extension of Angola's TPS designation is effective March 29, 2002, and will remain in effect until March 29, 2003. The 60-day re-registration period begins February 1, 2002 and will remain in effect until April 2, 2002.

FOR FURTHER INFORMATION CONTACT: Emily Crowder, Program Analyst, Immigration and Naturalization Service, 425 I Street, NW, Room 3040, Washington, DC 20536, telephone (202) 514–4754.

SUPPLEMENTARY INFORMATION:

What Authority Does the Attorney General Have To Extend the Designation of Angola Under the TPS Program?

Section 244(b)(3)(A) of the Immigration and Nationally Act (the Act) states that at least 60 days before the end of a designation, or any extension thereof, the Attorney General must review conditions in the foreign state for which he designation is in effect. 8 U.S.C. 1254a(b)(3)(A). If the Attorney General does not determine that the foreign state no longer continues to meet the conditions for designation, the period of designation is extended automatically for 6 months pursuant to section 244(b)(3)(C) of the Act, although the Attorney General may exercise his discretion to extend the designation for a period of 12 or 18 months. 8 U.S.C. 1254a(b)(3)(C). With respect to Angola, such an extension makes TPS available only to persons who have been continuously physically present since April 5, 2001, and have continuously resided in the United States since the effective date of the redesignation, April 5, 2001.

Why Did the Attorney General Decide To Extend the TPS Designation for Angola?

On March 29, 2000, the Attorney General designated Angola under the TPS program (65 FR 16634). Since that time, the Departments of Justice and State have continuously reviewed conditions in Angola, extending and re-designating Angola under the TPS program on April 5, 2001 (66 FR 18111). The current review has resulted in a consensus that a further 12-month extension is warranted. A recent Department of State report found that the conditions under which Angola was designated for TPS have not ceased to exist and, therefore, ''[t]he situation in Angola remains unsafe for return.'' Recommendation for Extension Of TPS, INS/DOS Consultation for Angola (November 1, 2001). The Department of Justice reports that ''[g]uerilla activities of UNITA have spread in recent months and both sides to the conflict have subjected civilians to a wide range of human rights abuses.'' The INS Resource Information Center, Angola: Information on Civil Conflict and the Socioeconomic and Humanitarian Situation (December 1, 2001). Such ongoing, armed conflict continues to threaten seriously the personal safety of Angolans, and the Department of State estimates that the fighting between UNTIA rebels and the Angolan Government will continue well into next year. Recommendation for Extension of TPS, INS/DOS Consultation for Angola. ''The warring parties have repeatedly subjected the civilian population to forced displacements and acts of violence,'' including murder and rape. *Id.* Approximately 3 million Angolans remain internally displaced, 380,000 of whom have been displaced since January 2001. *Id.* Additionally, UNITA rebels have begun ''using terrorist tactics to attack civilians even in government-controlled areas.'' *Id.* The armed conflict also continues to effect health conditions in Angola. The Department of State's report cities that ''[i]n overcrowded cities and makeshift IDP camps, malnutrition and vitamin deficiency-induced illnesses flourish, while poor water and sanitation conditions create an environment of increased risk of disease and epidemics such as polio and meningitis.'' *Id.* Also, the Department of State estimates that there are approximately 8 million landmines planted in Angolan soil, making it such that ''[r]eturnees would be at risk of becoming casualties.'' *Id.*

Based on this review, the Attorney General finds that the conditions that prompted designation of Angola under the TPS program continue to be met. 8 U.S.C. 1254a(b)(3)(A). There is an ongoing armed conflict within Angola and, due to such conflict, requiring the return of aliens who are nationals of Angola (or aliens having no nationality who last habitually resided in Angola) would pose a serious threat to their personal safety. 8 U.S.C. 1254a(b)(1)(A). Furthermore, there exist extraordinary and temporary conditions in Angola that prevent nationals of Angola (and aliens having no nationality who last habitually resided in Angola) from returning home in safety. 8 U.S.C. 1254a(b)(1)(C). Finally, permitting nationals of Angola to remain temporarily in the United States is not contrary to the national interest of the United States. *Id.* On the basis of these findings, the Attorney General concludes that the TPS designation for Angola should be extended for an additional 12-month period. 8 U.S.C. 1254a(b)(3)(C).

If I Currently Have TPS Through the Angola TPS Program, Do I Still Re-Register for TPS?

Yes. If you have already been granted TPS through the Angola TPS program, your status will expire on March 29, 2002. Accordingly, you must re-register for TPS in order to maintain your status through March 29, 2003. See the re-registration instructions below.

If I Am Currently Registered for TPS, How Do I Re-Register for an Extension?

All persons previously granted TPS under the Angola program who wish to maintain such status must apply for an extension by filing (1) a Form I–821, Application for Temporary Protected Status, without the $50 filing fee; (2) a Form I–765, Application for

Employment Authorization; and (3) two identification photographs (1½ inches x 1½ inches). See the chart below to determine whether you must submit the one hundred and twenty dollar ($120) filing fee with Form I–765. Applicants for an extension of TPS benefits do not need to be re-fingerprinted and thus need not pay the $50 fingerprint fee, Children beneficiaries of TPS who have reached the age of fourteen (14) but were not previously fingerprinted must pay the fifty dollar ($50) fingerprint fee with the application for extension.

Submit the completed forms and applicable fee, if any, to the Immigration and Naturalization Service (''Service'') district office having jurisdiction over your place of residence during the 60-day re-registration period that beings February 1, 2002 and April 2, 2002 (inclusive of such end date).

If	Then
You are applying for employment authorization until March 29, 2003.	You must complete and file the Form I–765, Application for Employment Authorization, with the $120 fee.
You already have employment authorization or do not require employment authorization.	You must complete and file Form I–765 with no fee.
You are applying for employment authorization and are requesting a fee waiver.	You must complete and file: (1) Form I–765 and (2) a fee waiver request and affidavit (and any other information) in accordance with 8 CFR 244.20.

Where Must I Ffile?

Submit the completed forms, applicable fees, and identification photographs to the Service district office having jurisdiction over your place of residence.

When Must I File?

You must file your application and accompanying materials within the 60-day reregistration period that begins February 1, 2002 and ends April 2, 2002 (inclusive of such end date).

How Does an Application for TPS Affect My Application for Asylum or Other Immigration Benefits?

An application for TPS does not affect an application for asylum or any other immigration benefit. A national of Angola (or alien having no nationality who last habitually resided in Angola) who is otherwise eligible for TPS and has applied for, or plans to apply for, asylum, but who has not yet been granted asylum or withholding of removal, may also apply for TPS. Denial of an application for asylum or any other immigration benefit does not affect an applicant's ability to apply for TPS, although the grounds for denying one form of relief may also be grounds for denying TPS. For example, a person who has been convicted of a particularly serious crime is not eligible for asylum or TPS. 8 U.S.C. 1158(b)(2); 8 U.S.C. 1254a(c)(2)(B)(i).

Does This Extension Allow Nationals of Angola (or Aliens Having No Nationality Who Last Habitually Resided in Angola) Who Entered the United States After April 5, 2001, To File for TPS?

No. This is a notice of an extension of the TPS designation for Angola, not a notice of redesignation of Angola under the TPS program. An extension of TPS does not change the required dates of continuous residence and continuous physical presence in the United States, in this case, April 5, 2001. This extension does not expand TPS availability to include nationals of Angola (or aliens having no nationality who last habitually resided in Angola) who have not been continuously physically present in, and have not continuously resided in, the United States since the date of the most recent redesignation, April 5, 2001.

Is Late Initial Registration Possible?

Yes. Some persons may be eligible for late initial registration under 8 CFR 244.2. To apply for late initial registration an applicant must:

(1) Be a national of Angola (or alien who has no nationality and who last habitually resided in Angola);

(2) Have been continuously physically present in the United States since April 5, 2001;

(3) Have continuously resided in the United States since April 5, 2001; and

(4) Be both admissible as an immigrant, except as provided under section 244(c)(2)(A) of the Act, and not ineligible under section 244(c)(2)(B) of the Act.

Additionally, the applicant must be able to demonstrate that during the registration period from April 5, 2001, through March 29, 2002, he or she:

(1) Was a nonimmigrant or had been granted voluntary departure status or any relief from removal;

(2) Had an application for change of status, adjustment of status, asylum, voluntary departure, or any relief from removal or change of status pending or subject to further review or appeal;

(3) Was a parolee or had a pending request for reparole; or

(4) Was the spouse or child of an alien currently eligible to be a TPS registrant. 8 CFR 244.2(f)(2).

An applicant for late initial registration must file an application for late registration within a 60-day period immediately following the expiration or termination of the conditions described above. 8 CFR 244.2(g).

Notice of Extension of Designation of Angola Under the TPS Program

By the authority vested in me as Attorney General under sections 244(b)(1), (b)(3)(A), and (b)(3)(C) of the Act, I have consulted with the appropriate government agencies and determine that the conditions that prompted designation of Angola for TPS continue to be met. 8 U.S.C. 1254a(b)(3)(A). Accordingly, I order as follows:

(1) The designation of Angola under section 244(b) of the Act is extended for an additional 12-month period from March 29, 2002, to March 29, 2003. 8 U.S.C. 1254a(b)(3)(C).

(2) There are approximately 1,000 nationals of Angola (or aliens having no nationality who last habitually resided in Angola) who have been granted TPS and who are eligible for re-registration.

(3) To maintain TPS, a national of Angola (or an alien having no nationality who last habitually resided in Angola) who received TPS during the initial designation or redesignation periods must re-register for TPS during the 60-day re-registration period from February 1, 2002 until April 2, 2002.

(4) To re-register, the applicant must file the following: (1) Form I–821, Application for Temporary Protected Status; (2) Form I–765, Application for Employment Authorization; and (3) two identification photographs (1½ inches by 1½ inches). There is no fee for a Form I–821 filed as part of the re-registration application. If the applicant requests employment authorization, he or she must submit one hundred and twenty dollars ($120) or a properly documented fee waiver request, pursuant to 8 CFR 244.20, with the Form I–765. An applicant who does not request employment authorization must nonetheless file Form I–765 along with Form I–821, but is not required to submit the fee. The fifty dollar ($50) fingerprint fee is required only for children beneficiaries of TPS who have reached the age of 14 but were not previously fingerprinted. Failure to re-register without good cause will result in the withdrawal of TPS. 8 CFR 244.17(c). Some persons who had not previously applied for TPS may be eligible for late initial registration under 8 CFR 244.2.

(5) At least 60 days before this extension terminates on March 29, 2003, the Attorney General will review the designation of Angola under the TPS program and determine whether the conditions for designation continue to be met. 8 U.S.C. 1254a(b)(3)(A). Notice of that determination, including the basis for the determination, will be published in the **Federal Register**. 8 U.S.C. 1254a(b)(3)(A).

(6) Information concerning the extension of designation of Angola under the TPS program will be available at local Service offices upon publication of this notice and on the Service Web site at *http://www.ins.usdoj.gov.*

Dated: January 28, 2002.

John Ashcroft,

Attorney General.

[FR Doc. 02–2528 Filed 1–31–02; 8:45 am]

BILLING CODE 4410–10–M

DEPARTMENT OF LABOR

Employment Standards Administration

Proposed Collection; Comment Request; Correction

ACTION: Correction.

SUMMARY: In **Federal Register** Volume 66, Number 244, beginning on page 65513 in the issue of Wednesday, December 19, 2001, under Current Actions, under Type of Review, make the following correction: On page 65514, Type of Review was previously listed as Extension. This should be changed to Type of Review: Revision.

Dated: January 29, 2002.

Patricia Vastano,

Deputy Director, Office of Management, Administration and Planning, Employment Standards Administration.

[FR Doc. 02–2496 Filed 1–31–02; 8:45 am]

BILLING CODE 4510–CM–M

DEPARTMENT OF LABOR

Employment Standards Administration; Wage and Hour Division

Minimum Wages for Federal and Federally Assisted Construction; General Wage Determination Decisions

General wage determination decisions of the Secretary of Labor are issued in accordance with applicable law and are based on the information obtained by the Department of Labor from its study of local wage conditions and data made available from other sources. They specify the basic hourly wage rates and fringe benefits which are determined to be prevailing for the described classes of laborers and mechanics employed on constructed projects of a similar character and in the localities specified therein.

The determinations in these decisions of prevailing rates and fringe benefits have been made in accordance with 29 CFR part 1, by authority of the Secretary of Labor pursuant to the provisions of the Davis-Bacon Act of March 3, 1931, as amended (46 Stat. 1494, as amended, 40 U.S.C. 276a) and of other Federal statutes referred to in 29 CFR part 1, Appendix, as well as such additional statutes as may from time to time be enacted containing provisions for the payment of wages determined to be prevailing by the Secretary of Labor in accordance with the Davis-Bacon Act. The prevailing rates and fringe benefits determined in these decisions shall, in accordance with the provisions of the foregoing statutes, constitute the minimum wages payable on Federal and federally assisted construction projects to laborers and mechanics of the specified classes engaged on contract work of the character and in the localities described therein.

Good cause is hereby found for not utilizing notice and public comment procedure thereon prior to the issuance of these determinations as prescribed in 5 U.S.C. 553 and not providing for delay in the effective date as prescribed in that section, because the necessity to issue current construction industry wage determinations frequently and in large volume causes procedures to be impractical and contrary to the public interest.

General wage determination decisions, and modifications and supersedes decisions thereto, contain no expiration dates and are effective from their date of notice in the **Federal Register**, or on the date written notice is received by the agency, whichever is earlier. These decisions are to be used in accordance with the provisions of 29 CFR Parts 1 and 5. Accordingly, the applicable decision, together with any modifications issued, must be made a part of every contract for performance of the described work within the geographic area indicated as required by an applicable Federal prevailing wage law and 29 CFR part 5. The wage rates and fringe benefits, notice of which is published herein, and which are contained in the Government Printing Office (GPO) document entitled ''General Wage Determinations Issued Under the Davis-Bacon and Related Acts,'' shall be the minimum paid by contractors and subcontractors to laborers and mechanics.

Any person, organization, or governmental agency having an interest in the rates determined as prevailing is encouraged to submit wage rate and fringe benefit information for consideration by the Department.

Further information and self-explanatory forms for the purpose of submitting this data may be obtained by writing to the U.S. Department of Labor, Employment Standards Administration, Wage and Hour Division, Division of Wage Determinations, 200 Constitution Avenue, NW., Room S–3014, Washington, DC 20210.

Modification to General Wage Determination Decisions

The number of the decisions listed to the Government Printing Office document entitled ''General Wage Determinations Issued Under the Davis-Bacon and Related Acts'' being modified as listed by Volume and State. Dates of publication in the **Federal Register** are in parentheses following the decisions being modified.

Volume I:

None

Volume II:

None

Volume III:

None

Volume IV:

None

Volume V:

None

Volume VI:

None

Volume VII:

None

General Wage Determination Publication

General wage Determinations issued under the Davis-Bacon and related Acts, including those noted above, may be found in the Government Printing Office (GPO) document entitled ''General Wage Determinations Issued Under the Davis-Bacon And Related Acts''. This publication is available at each of the 50 Regional Government Depository Libraries and many of the 1,400 Government Depository Libraries across the country.

General Wage determinations issued under the Davis-Bacon and related Acts are available electronically at no cost on the Government Printing Office site at *www.access.gpo.gov/davisbacon.* They are also available electronically by subscription to the Davis-Bacon Online

Service (*http://davisbacon.fedworld.gov)of* the National Technical Information Service (NTIS) of the U.S. Department of Commerce at 1–800–363–2068. This subscription offers value-added features such as electronic delivery of modified wage decisions directly to the user's desktop, the ability to access prior wage decisions issued during the year, extensive Help desk Support, etc.

Hard-copy subscriptions may be purchased from: Superintendent of Documents, U.S. Government Printing Office, Washington, DC 20402, (202) 512–1800.

When ordering hard-copy subscription(s), be sure to specify the State(s) of interest, since subscriptions may be ordered for any or all of the six separate Volumes, arranged by State. Subscriptions include an annual edition (issued in January or February) which includes all current general wage determinations for the States covered by each volume. Throughout the remainder of the year, regular weekly updates will be distributed to subscribers.

Signed at Washington, DC, this 24 day of January 2002.

Carl J. Poleskey,

Chief, Branch, of Construction Wage Determinations.

[FR Doc. 02–2225 Filed 1–31–02; 8:45 am]

BILLING CODE 4510–27–M

LIBRARY OF CONGRESS

Copyright Office

[Docket No. 2002–2 CARP]

Copyright Arbitration Royalty Panels; List of Arbitrators

AGENCY: Copyright Office, Library of Congress.

ACTION: Publication of the 2002–2003 CARP arbitrator list.

SUMMARY: The Copyright Office is publishing the list of arbitrators eligible for service on a Copyright Arbitration Royalty Panel (''CARP'') during 2002 and 2003. This list will be used to select the arbitrators who will serve on panels initiated in 2002 and 2003 for determining the distribution of royalty fees or the adjustment of royalty rates.

EFFECTIVE DATE: February 1, 2002.

FOR FURTHER INFORMATION CONTACT: David O. Carson, General Counsel, or Tanya M. Sandros, Attorney-Advisor, Copyright Arbitration Royalty Panel, P.O. Box 70977, Southwest Station, Washington, DC 20024. Telephone: (202) 707–8380. Telefax: (202) 252–3423.

SUPPLEMENTARY INFORMATION:

Background

For royalty rate adjustments and distributions that are in controversy, the Copyright Act requires the selection of a Copyright Arbitration Royalty Panel (''CARP'') consisting of three arbitrators from ''lists provided by professional arbitration associations.'' *See* 17 U.S.C. 802(b). The Librarian of Congress selects two of the arbitrators for a CARP from a list of nominated arbitrators; those selected then choose a third arbitrator to serve as chairperson of the panel. If the two arbitrators cannot agree, the Librarian is instructed to select the third arbitrator.

On December 7, 1994, the Copyright Office issued final regulations implementing the CARP selection process. 59 FR 63025 (December 7, 1994). Subsequently, these rules were amended to provide for the generation of a new list of nominees biennially. 61 FR 63715 (December 2, 1996). Section 251.3(a) of the regulations allows any professional arbitration association or organization to nominate qualified individuals, as described in section 251.5, to serve as arbitrators on a CARP. The regulations require that the submitting arbitration association supply the following information for each person:

(1) The full name, address, and telephone number of the person.

(2) The current position and name of the person's employer, if any, along with a brief summary of the person's employment history, including areas of expertise, and, if available, a description of the general nature of clients represented and the types of proceedings in which the person represented clients.

(3) A brief description of the educational background of the person, including teaching positions and membership in professional associations, if any.

(4) A statement of the facts and information which qualify the person to serve as an arbitrator under section 251.5.

(5) A description or schedule detailing fees proposed to be charged by the person for service on a CARP.

(6) Any other information which the professional arbitration association or organization may consider relevant. 37 CFR 251.3(a).

Section 251.3(b) of the regulations requires the Copyright Office to publish a list of qualified persons and mandates that this list must include between 30 and 75 names of persons who were nominated from at least three arbitration associations. The newly comprised list of arbitrators will be in effect until the end of the 2003 calendar year, and any arbitrator selected for a CARP during 2002 and 2003 will come from this list. The list includes the name of the nominee and the nominating association.

The publication of today's list satisfies the requirement of 37 CFR 251.3. The information submitted by the arbitration association with respect to each person listed is available for copying and inspection at the Licensing Division of the Copyright Office. Thus, for example, if the Librarian is required to convene a CARP in 2002 for a royalty fee distribution, parties to that proceeding may review that information as a means of formulating objections to listed arbitrators under section 251.4. The Licensing Division of the Copyright Office is located in the Library of Congress, James Madison Building, LM–458, 101 Independence Avenue, SE., Washington, DC 20540.

Deadline for Filing Financial Disclosure Statement

Section 251.32(a) of the CARP rules provides that, within 45 days of their nomination, each nominee must ''file with the Librarian of Congress a confidential financial disclosure statement as provided by the Library of Congress.'' The Copyright Office sent financial disclosure statements to the nominating associations, with specific instructions for completing and filing the statement, and asked each organization to distribute the forms to its nominees for the CARP arbitrator list. The Librarian of Congress will use the financial disclosure form to determine what financial conflicts of interest, if any, may preclude the nominee from serving as an arbitrator in a CARP proceeding. Unlike information submitted by the arbitration associations under section 251.3(a), the information contained in the financial disclosure statements is confidential and is not available to the public or to the parties to the proceeding. Each nominee has filed a completed financial disclosure form with the Librarian of Congress.

The 2002–2003 CARP Arbitrator List

Howard Adler, *Esq.*—JAMS
The Honorable James M. Bailey—Judicial Dispute Resolution, Inc.
William F. Baron, *Esq.*—American Arbitration Association
The Honorable Tobias G. Barry—Judicial Dispute Resolution, Inc.
Bernard J. Bonn III, *Esq.*—American Arbitration Association
Dorothy K. Campbell, *Esq.*—Intellectual Property Neutrals Association

Terry L. Clark, *Esq.*—American Arbitration Association
Jerry Cohen, *Esq.*—JAMS
John W. Cooley, *Esq.*—Judicial Dispute Resolution, Inc
Mark J. Davis, *Esq.*—American Arbitration Association
The Honorable Gino L. DiVito—Judicial Dispute Resolution, Inc.
Edward Dreyfus, *Esq.*—American Arbitration Association
The Honorable Charles W. Fowler—Arbitration and Mediation Services
Sandra J. Franklin, *Esq.*—National Arbitration Forum
William D. Friend, *Esq.*—American Arbitration Association
The Honorable Michael B. Getty—JAMS
Margery F. Gootnick, *Esq.*—Arbitration and Mediation Services
The Honorable Jerry Grissom—JAMS
The Honorable Jeffrey S. Gulin—Arbitration and Mediation Services
William E. Hartgering, *Esq.*—JAMS
Katherine Hendricks, *Esq.*—American Arbitration Association
Harold Himmelman, *Esq.*—JAMS
The Honorable Louis N. Hurwitz—Arbitration and Mediation Services
Jane Juliano, *Esq.*—JAMS
The Honorable Lewis A. London—Arbitration and Mediation Services
The Honorable Harlan A. Martin—JAMS
The Honorable William F. McDonald—JAMS
Gloria Messinger, *Esq.*—American Arbitration Association
The Honorable James R. Miller, Jr.—JAMS
Cecilia H. Morgan, *Esq.*—JAMS
Cheryl I. Niro, *Esq.*—Judicial Dispute Resolution, Inc.
Timothy T. Patula, *Esq.*—American Arbitration Association
Alex S. Polsky, *Esq.*—JAMS
Richard H. Sayler, *Esq.*—American Arbitration Association
The Honorable Philip E. Schwab—JAMS
Vivien B. Shelanski, *Esq.*—JAMS
The Honorable Judith S. Singleton—Arbitration and Mediation Services
The Honorable James E. Sullivan—JAMS
The Honorable Pamela A. Tynes—JAMS
Eric E. Van Loon, *Esq.*—JAMS
The Honorable Curtis E. von Kann—JAMS
Frank M. Wentworth, Jr., *Esq.*—American Arbitration Association
The Honorable Ronald P. Wertheim—JAMS
The Honorable Michael Wolf—Arbitration and Mediation Services
Michael D. Young, *Esq.*—JAMS
Gregg R. Zegarelli, *Esq.*—American Arbitration Association

Dated: January 29, 2002.

David O. Carson,

General Counsel.

[FR Doc. 02–2519 Filed 1–31–02; 8:45 am]

BILLING CODE 1410–33–P

NATIONAL AERONAUTICS AND SPACE ADMINISTRATION

[Notice (02–014)]

NASA Advisory Council (NAC), Space Science Advisory Committee (SScAC), Astronomical Search for Origins and Planetary Systems Subcommittee (OS); Meeting

AGENCY: National Aeronautics and Space Administration.

ACTION: Notice of meeting.

SUMMARY: In accordance with the Federal Advisory Committee Act, Pub. L. 92–463, as amended, the National Aeronautics and Space Administration announces a forthcoming meeting of the NASA Advisory Council, Space Science Advisory Committee, Astronomical Search for Origins Planetary Systems Subcommittee.

DATES: Monday, February 25, 2002, 8:30 a.m. to 5:30 p.m.

ADDRESSES: Doubletree Hotel Pasadena, 191 N Los Robles, Pasadena, California 91101.

FOR FURTHER INFORMATION CONTACT: Ms. Marian Norris, Code SB, National Aeronautics and Space Administration, Washington, DC 20546, (202) 358–4452.

SUPPLEMENTARY INFORMATION: The meeting will be open to the public up to the capacity of the room. The agenda for the meeting includes the following topics:

—SS Budget

—SIRTF Update

—Wide Field Camera 3 (HST instrument) Update

—Origins Theme Update

—Roadmapping Update

It is imperative that the meeting be held on these dates to accommodate the scheduling priorities of the key participants. Visitors will be requested to sign a visitor's register.

Sylvia K. Kraemer,

Advisory Committee Management Officer, National Aeronautics and Space Administration.

[FR Doc. 02–2536 Filed 1–31–02; 8:45 am]

BILLING CODE 7510–01–P

NUCLEAR REGULATORY COMMISSION

[Docket No. 50–461]

Amergen Energy Company, LLC; Notice of Consideration of Issuance of Amendment to Facility Operating License and Opportunity for a Hearing

The U.S. Nuclear Regulatory Commission (the Commission) is considering issuance of an amendment to Facility Operating License No. NPF–62, issued to AmerGen Energy Company, LLC (AmerGen, the licensee), for operation of the Clinton Power Station (CPS) located in DeWitt County, Illinois.

The proposed amendment would allow an increase in the licensed power from 2894 megawatts thermal (MWt) to 3473 MWt. This change represents an increase of approximately 20 percent above the current licensed power at CPS, and is considered an extended power uprate. The proposed amendment would also change the operating license and the technical specifications appended to the operating license to provide for implementing uprated power operation.

AmerGen submitted the amendment request by letter dated June 18, 2001. The application was supplemented by letters dated September 7 and 28, October 17, 23, 26, and 31, November 8 (2 letters), 20, 21, 29, and 30, and December 5, 6, 7, 13 (2 letters), 20, 21, and 26, 2001, and January 8, 15, and 16, 2002.

Before issuance of the proposed license amendment, the Commission will have made findings required by the Atomic Energy Act of 1954, as amended (the Act), and the Commission's regulations.

By March 4, 2002, the licensee may file a request for a hearing with respect to issuance of the amendment to the subject facility operating license, and any person whose interest may be affected by this proceeding and who wishes to participate as a party in the proceeding must file a written request for a hearing and a petition for leave to intervene. Requests for a hearing and a petition for leave to intervene shall be filed in accordance with the Commission's ''Rules of Practice for Domestic Licensing Proceedings'' in 10 CFR Part 2. Interested persons should consult a current copy of 10 CFR 2.714, which is available at the Commission's Public Document Room, located at One White Flint North, 11555 Rockville Pike (first floor), Rockville, Maryland or electronically on the Internet at the NRC Web site *http://www.nrc.gov/NRC/CFR/index.html.* If there are problems in

accessing the document, contact the Public Document Room Reference staff at 1–800–397–4209, 301–415–4737, or by e-mail to *pdr@nrc.gov.* If a request for a hearing or petition for leave to intervene is filed by the above date, the Commission or an Atomic Safety and Licensing Board, designated by the Commission or by the Chairman of the Atomic Safety and Licensing Board Panel will rule on the request and/or petition; and the Secretary or the designated Atomic Safety and Licensing Board will issue a notice of hearing or an appropriate order.

As required by 10 CFR 2.714, a petition for leave to intervene shall set forth with particularity the interest of the petitioner in the proceeding, and how that interest may be affected by the results of the proceeding. The petition must specifically explain the reasons why intervention should be permitted with particular reference to the following factors: (1) The nature of the petitioner's right under the Act to be made a party to the proceeding; (2) the nature and extent of the petitioner's property, financial, or other interest in the proceeding; and (3) the possible effect of any order that may be entered in the proceeding on the petitioner's interest. The petition must also identify the specific aspect(s) of the subject matter of the proceeding as to which petitioner wishes to intervene. Any person who has filed a petition for leave to intervene or who has been admitted as a party may amend the petition without requesting leave of the Board up to 15 days prior to the first prehearing conference scheduled in the proceeding, but such an amended petition must satisfy the specificity requirements described above.

Not later than 15 days prior to the first prehearing conference scheduled in the proceeding, a petitioner shall file a supplement to the petition to intervene that must include a list of the contentions that the petitioner seeks to have litigated in the hearing. Each contention must consist of a specific statement of the issue of law or fact to be raised or controverted. In addition, the petitioner shall provide a brief explanation of the bases of each contention and a concise statement of the alleged facts or expert opinion that support the contention and on which the petitioner intends to rely in proving the contention at the hearing. The petitioner must also provide references to those specific sources and documents of which the petitioner is aware and on which the petitioner intends to rely to establish those facts or expert opinion. The petitioner must provide sufficient information to show that a genuine dispute exists with the applicant on a material issue of law or fact. Contentions shall be limited to matters within the scope of the amendment under consideration. The contention must be one that, if proven, would entitle the petitioner to relief. A petitioner who fails to file such a supplement that satisfies these requirements with respect to at least one contention will not be permitted to participate as a party.

Those permitted to intervene become parties to the proceeding, subject to any limitations in the order granting leave to intervene, and have the opportunity to participate fully in the conduct of the hearing, including the opportunity to present evidence and cross-examine witnesses.

A request for a hearing and petition for leave to intervene must be filed with the Secretary of the Commission, U.S. Nuclear Regulatory Commission, Washington, DC 20555–0001, Attention: Rulemakings and Adjudications Staff, or may be delivered to the Commission's Public Document Room, located at One White Flint North, 11555 Rockville Pike (first floor), Rockville, Maryland, by the above date. A copy of the request for a hearing and the petition should also be sent to the Office of the General Counsel, U.S. Nuclear Regulatory Commission, Washington, DC 20555–0001, and to Edward J. Cullen, Jr., Vice President and General Counsel, Exelon Generation Company, LLC, 300 Exelon Way, KSB 3-W, Kennett Square, PA 19348, attorney for the licensee.

Nontimely filings of petitions for leave to intervene, amended petitions, supplemental petitions and/or requests for a hearing will not be entertained absent a determination by the Commission, the presiding officer, or the Atomic Safety and Licensing Board that the petition and/or request should be granted based upon a balancing of the factors specified in 10 CFR 2.714(a)(1)(i)-(v) and 2.714(d).

If a request for a hearing is received, the Commission's staff may issue the amendment after it completes its technical review and prior to the completion of any required hearing if it publishes a further notice for public comment of its proposed finding of no significant hazards consideration in accordance with 10 CFR 50.91 and 50.92.

For further details with respect to this action, see the application for amendment dated June 18, 2001, as supplemented by letters dated September 7 and 28, October 17, 23, 26, and 31, November 8 (2 letters), 20, 21, 29, and 30, and December 5, 6, 7, 13 (2 letters), 20, 21, and 26, 2001, and January 8, 15, and 16, 2002, which are available for public inspection at the Commission's Public Document Room, located at One White Flint North, 11555 Rockville Pike (first floor), Rockville, Maryland. Publicly available records will be accessible electronically from the Agencywide Documents Access and Management Systems (ADAMS) Public Electronic Reading Room on the Internet at the NRC Web site, *http://www.nrc.gov/NRC/ADAMS/index.html.* Persons who do not have access to ADAMS or who encounter problems in accessing the documents located in ADAMS, should contact the NRC Public Document Room Reference staff by telephone at 1–800–397–4209, 301–415–4737 or by e-mail to pdr@nrc.gov.

Dated at Rockville, Maryland, this 28th day of January 2002.

For the Nuclear Regulatory Commission.

Jon B. Hopkins,

Senior Project Manager, Section 2, Project Directorate III, Division of Licensing Project Management, Office of Nuclear Reactor Regulation.

[FR Doc. 02–2499 Filed 1–31–02; 8:45 am]

BILLING CODE 7590–01–P

NUCLEAR REGULATORY COMMISSION

[Docket Nos. 50–352 and 50–353]

Exelon Generation Company, LLC; Notice of Withdrawal of Application for Amendments to Facility Operating Licenses

The U.S. Nuclear Regulatory Commission (the Commission) has granted the request of Exelon Generation Company, LLC, (the licensee) to withdraw its June 13, 2001, application for proposed amendments to Facility Operating License Nos. NPF–39 and NPF–85 for the Limerick Generating Station, Units 1 and 2, located in Montgomery County, Pennsylvania.

The proposed amendments would have modified the facility and the facility Technical Specifications by replacing the interim corrective actions for thermal-hydraulic power oscillations with an automatic reactor scram from the output of the oscillation power range monitor. However, by letter dated December 13, 2001, the licensee withdrew the proposed change.

For further details with respect to this action, see the application for amendment dated June 13, 2001, and the licensee's letter dated December 13, 2001, which withdrew the application for license amendments. Documents may be examined, and/or copied for a fee, at the NRC's Public Document Room (PDR), located at One White Flint

North, 11555 Rockville Pike (first floor), Rockville, Maryland. Publicly available records will be accessible electronically from the Agencywide Documents Access and Management Systems (ADAMS) Public Electronic Reading Room on the internet at the NRC Web site, *http://www.nrc.gov/reading-rm/adams/html.* Persons who do not have access to ADAMS or who encounter problems in accessing the documents located in ADAMS, should contact the NRC PDR Reference staff by telephone at 1–800–397–4209, 301–415–4737, or by e-mail to *pdr@nrc.gov.*

Dated at Rockville, Maryland, this 28th day of January 2002.

For the Nuclear Regulatory Commission.

Christopher Gratton,

Sr. Project Manager, Section 2, Project Directorate I, Division of Licensing Project Management, Office of Nuclear Reactor Regulation.

[FR Doc. 02–2498 Filed 1–31–02; 8:45 am]

BILLING CODE 7590–01–P

NUCLEAR REGULATORY COMMISSION

[Docket Nos. 50–327–OLA, 50–328–OLA, & 50–390–OLA; ASLBP No. 02–796–01–OLA]

Tennessee Valley Authority; Sequoyah Nuclear Plant, Units 1 & 2; Watts Bar Nuclear Plant, Unit 1; Establishment of Atomic Safety and Licensing Board

Pursuant to delegation by the Commission dated December 29, 1972, published in the **Federal Register**, 37 FR 28,710 (1972), and sections 2.105, 2.700, 2.702, 2.714, 2.714a, 2.717, 2.721, and 2.772(j) of the Commission's Regulations, all as amended, an Atomic Safety and Licensing Board is being established to preside over the following proceeding:

Tennessee Valley Authority, Sequoyah Nuclear Plant, Units 1 & 2, Watts Bar Nuclear Plant, Unit 1.

This Board is being established pursuant to two notices of consideration of issuance of operating license amendment, proposed no significant hazards consideration determination, and opportunity for a hearing published in the **Federal Register** (66 FR 65,000 and 65,005 (Dec. 17, 2001)). The proceeding involves petitions for intervention submitted January 16, 2002, by We the People, Inc., Tennessee, (WPIT) and the Blue Ridge Environmental Defense League (BREDL), respectively, challenging requests by the Tennessee Valley Authority (TVA) to amend the operating licenses for the Sequoyah Nuclear Plant, Units 1 and 2, and the Watts Bar Nuclear Plant, Unit 1.[1] The amendments would change facility technical specifications to allow the plants to provide incore irradiation services for the United States Department of Energy for the production of tritium for national defense purposes.

The Board is comprised of the following administrative judges:

Thomas S. Moore, Chair, Atomic Safety and Licensing Board Panel, U.S. Nuclear Regulatory Commission, Washington, DC 20555–0001

Dr. Peter S. Lam, Atomic Safety and Licensing Board Panel, U.S. Nuclear Regulatory Commission, Washington, DC 20555–0001

Dr. Thomas S. Elleman, Atomic Safety and Licensing Board Panel, U.S. Nuclear Regulatory Commission, Washington, DC 20555–0001

All correspondence, documents, and other materials shall be filed with the administrative judges in accordance with 10 CFR 2.701.

Issued at Rockville, Maryland, this 28th day of January 2002.

G. Paul Bollwerk, III,

Chief Administrative Judge, Atomic Safety and Licensing Board Panel.

[FR Doc. 02–2500 Filed 1–31–02; 8:45 am]

BILLING CODE 7590–01–P

[1] Although the TVA license amendment requests that are the subject of the WPIT and BREDL hearing requests that triggered this Licensing Board constitution notice were submitted separately, involve different facilities, and were the subject of separate hearing opportunity notices, both amendments are challenged by each of the petitioners. Under the circumstances, one Licensing Board is being established to consider both contested TVA applications in a consolidated proceeding. Any objection to this consolidation by any of the participants to the proceeding should be raised with the Licensing Board promptly.

NUCLEAR REGULATORY COMMISSION

Decommissioning Criteria for the West Valley Demonstration Project (M–32) at the West Valley Site; Final Policy Statement

AGENCY: Nuclear Regulatory Commission.

ACTION: Final policy statement.

SUMMARY: On December 3, 1999 (64 FR 67952), the Commission issued, for public comment, a draft policy statement that would approve the application of the U.S. Nuclear Regulatory Commission's (NRC's) License Termination Rule (LTR), as the decommissioning criteria for the West Valley Demonstration Project (WVDP) at the West Valley site. It also held a public meeting, on January 5, 2000, to solicit public comment on the draft. This final policy statement was developed after considering public comments on the draft, and continues to apply the LTR as the criteria for the WVDP at the West Valley site.

EFFECTIVE DATE: February 1, 2002.

FOR FURTHER INFORMATION, CONTACT: Chad Glenn, Office of Nuclear Material Safety and Safeguards, Mail Stop T–8F37, U.S. Nuclear Regulatory Commission, Washington, DC 20555–0001.

SUPPLEMENTARY INFORMATION:

I. Introduction
II. Background (Draft Policy Statement)
III. Overview of Public Comments
IV. Summary of Public Comments and Responses to Comments
A. Comments on the LTR
B. Comments on LTR guidance
C. Comments on implementing the LTR
D. Comments on NRC's process for prescribing the decommissioning criteria
E. Comments on jurisdictional aspects of prescribing the decommissioning criteria
F. Comments on the use of incidental waste criteria at the West Valley site
G. Comments related to how the site should be decommissioned
H. Comments on the wording of the draft policy statement
I. Other comments
V. Final Policy Statement

I. Introduction

This final policy statement is being issued under the authority of the WVDP Act, to prescribe decommissioning criteria for the WVDP.

II. Background (Draft Policy Statement)

From 1966 to 1972, under an Atomic Energy Commission (AEC) license, Nuclear Fuel Services (NFS) reprocessed 640 metric tons of spent fuel at its West Valley, New York, facility—the only commercial spent fuel reprocessing plant in the U.S. The facility shut down, in 1972, for modifications to increase its seismic stability and to expand its capacity. In 1976, without restarting the operation, NFS withdrew from the reprocessing business and returned control of the facilities to the site owner, the New York State Energy Research and Development Authority (NYSERDA). The reprocessing activities resulted in about 2.3 million liters (600,000 gallons) of liquid high-level waste (HLW) stored below ground in tanks, other radioactive wastes, and residual radioactive contamination.

The West Valley site was licensed by AEC, and then NRC, until 1981, when the license was suspended to execute

the 1980 WVDP Act, Pub. L. 96–368.[1] The WVDP Act authorized the U.S. Department of Energy (DOE), in cooperation with NYSERDA, the owner of the site and the holder of the suspended NRC license, to: (1) Carry out a liquid-HLW management demonstration project; (2) solidify, transport, and dispose of the HLW that exists at the site; (3) dispose of low-level waste (LLW) and transuranic waste produced by the WVDP, in accordance with applicable licensing requirements; and (4) decontaminate and decommission facilities used for the WVDP, in accordance with requirements prescribed by NRC. NYSERDA is responsible for all site facilities and areas outside the scope of the WVDP Act. Although NRC suspended the license covering the site until completion of the WVDP, NRC has certain authorities, under the WVDP Act, that include prescribing decommissioning criteria for the tanks and other facilities in which the HLW solidified under the project was stored, the facilities used in the solidification of the waste, and any material and hardware used in connection with the WVDP. It should also be noted that DOE is not an NRC licensee and DOE's decommissioning activities for the WVDP at the West Valley site are conducted under the WVDP Act and not the Atomic Energy Act (AEA).

The WVDP is currently removing HLW from underground tanks at the site, vitrifying it, and storing it onsite for eventual offsite disposal in a Federal repository. The vitrification operations are nearing completion. In addition to the vitrified HLW, the WVDP operations have also produced LLW and transuranic waste which, under the Act, must be disposed of in accordance with applicable licensing requirements. Besides the HLW at the site, the spent fuel reprocessing and waste disposal operations resulted in a full range of buried radioactive wastes and structural and environmental contamination at the site.

In 1989, DOE and NYSERDA began to develop a joint Environmental Impact Statement (EIS) for project completion and site closure, and to evaluate waste disposal and decommissioning alternatives. Because the WVDP Act authorizes NRC to prescribe decommissioning criteria for the project, NRC and DOE agreed on NRC's participation as a cooperating agency on the EIS, with DOE and NYSERDA, to aid NRC in its decision on decommissioning criteria. The draft EIS was published in 1996. Subsequently, DOE decided to descope this EIS into two separate EISs to address: (1) Near-term decontamination and waste management at the WVDP; and (2) decommissioning, long-term monitoring, and stewardship of the site.[2] The NRC will not be a Cooperating Agency on the decontamination and waste management EIS because the Commission is not prescribing criteria for decontamination activities considered in this EIS. The NRC will be a Cooperating Agency on the EIS for decommissioning under the WVDP Act. The WVDP Act does not address license termination of the NRC license for the site, or portions thereof. Any such license termination will be conducted (if license termination is possible and pursued) under the Atomic Energy Act (AEA) of 1954, as amended. If NYSERDA pursues either full or partial license termination of the NRC license, NRC will need to conduct an environmental review to determine if an EIS is necessary to support license termination.

After public review of the draft EIS, the WVDP convened the West Valley Citizen Task Force (CTF), in early 1997, to obtain stakeholder input on the EIS. The CTF recommendations for the preferred alternative in the EIS were completed in July 1998. In the latter half of 1997 (during the period that the CTF was working on its recommendations), NRC's LTR was published (62 FR 39058; July 21, 1997).

The Commission published a draft policy statement on decommissioning criteria for the WVDP at the West Valley site, for public comment, and a notice of a public meeting in the **Federal Register** on December 3, 1999 (64 FR 67952).[3] The public meeting, to solicit public comment on the draft, was held on January 5, 2000. As a result of that meeting, the Commission extended the comment period to April 1, 2000. This final policy statement was developed after considering the public comments on the draft. This final policy statement recognizes that a flexible approach to decommissioning is needed both to ensure that public health and safety and the environment are protected and to define a practical resolution to the challenges that are presented by the site. In that regard, the Commission has decided to prescribe the LTR criteria for the WVDP at the West Valley site, reflecting the fact that the applicable decommissioning goal for the entire NRC-licensed site is compliance with the requirements of the LTR. However, the Commission recognizes that health and safety and cost-benefit considerations may justify the evaluation of alternatives that do not fully comply with the LTR criteria. For example, the Commission would consider an exemption allowing higher limits for doses on a failure of institutional control if it can be rigorously demonstrated that protection of the public health and safety for future generations could be reasonably assured through more robust engineered barriers and/or increased long-term monitoring and maintenance. The Commission is prepared to provide flexibility to assure cleanup to the maximum extent technically and economically feasible.

It should be noted that the subpart E of 10 CFR part 20 (LTR) does contain provisions for alternate criteria and subpart N of 10 CFR part 20 contains provisions for potential exemptions,[4] with both alternatives based on a site-specific analysis which demonstrates that public health and safety will be adequately protected with reasonable assurance. If the NRC license cannot be terminated in a manner which provides reasonable assurance of adequate protection of the public health and safety, then the appropriate Commission action may be to require a long term or even a perpetual license for an appropriate portion of the site until, if and when possible, an acceptable alternative is developed to permit actual license termination.[5]

[1] The State of New York licenses a low-level waste disposal area at the West Valley site. Unless otherwise indicated, the terms ''West Valley site'' or ''site'' used in this Policy Statement refers to the NRC-licensed portions of the site.

[2] 66 FR 16447 (March 26, 2001).

[3] Before issuing the draft policy statement for comment, the NRC staff proposed decommissioning criteria for West Valley to the Commission in a Commission Paper entitled ''Decommissioning Criteria for West Valley,'' dated October 30, 1998 (SECY–98–251). On January 12, 1999, the Commission held a public meeting, on SECY–98–251, to obtain input from interested parties. Based on the results from this meeting, the Commission issued a Staff Requirements Memorandum (SRM), on January 26, 1999, requesting additional information on the staff's proposed decommissioning criteria for West Valley. In response to the January 26, 1999, SRM, the staff provided SECY–99–057, to the Commission, entitled ''Supplement to SECY–98–251, 'Decommissioning Criteria for West Valley.' '' Based on the contents of SECY–98–251, SECY–99–057, and written and oral comments from interested parties, the Commission issued an SRM on June 3, 1999, detailing its decisions on the decommissioning criteria for West Valley.

[4] Exemptions to NRC regulations can be issued to NRC licensees if the Commission determines that the exemption is authorized by law and would not result in undue hazard to life or property. NYSERDA is the licensee for the West Valley site and DOE is acting as a surrogate for NYSERDA until the NYSERDA license is reinstated at the end of the WVDP.

[5] If a long term or perpetual license is necessary for any portion of the site, it is the Commission's intent that that portion of the site will be decontaminated in the interim to the extent technically and/or economically feasible. In

Based on the public comments received, the Commission has revisited the issue of ''incidental waste'' at West Valley. The Commission has decided to issue incidental waste criteria to clarify the status of and classify any residual wastes present after cleaning of the high-level radioactive waste (HLW) tanks at West Valley. Previously, the NRC has provided advice to DOE concerning DOE's classification of certain waste as incidental waste for clean-up of HLW storage tanks at both Hanford and Savannah River. As noted above, NRC intends to apply the LTR decommissioning criteria as the decommissioning goal for the entire NRC-licensed portion of the site. The Commission has decided that the most recent advice provided to DOE for the classification of incidental waste at Savannah River, with some additional modifications, provides the appropriate criteria which should be applied to West Valley. Specifically, the Commission is now providing the following criteria for classification of the incidental waste (which will not be deemed to be HLW) at West Valley:

(1) The waste should be processed (or should be further processed) to remove key radionuclides to the maximum extent that is technically and economically practical; and

(2) The waste should be managed, so that safety requirements comparable [6] to the performance objectives in 10 CFR part 61 subpart C, are satisfied.

Consistent with the overall approach in applying the LTR to the WVDP and to the entire NRC-licensed site following conclusion of the WVDP, the resulting calculated dose from the incidental waste is to be integrated with all the other calculated doses from the residual radioactive material at the NRC-licensed site to ensure that the LTR criteria are met. This is appropriate because the Commission does not intend to establish separate dose standards for various sections of the NRC-licensed site.[7]

III. Overview of Public Comments

Twenty-eight organizations and individuals submitted written comments on the draft policy statement. Comments also were provided at the public meeting held on January 5, 2000. The commenters represented a variety of interests. Comments were received from Federal and State agencies, citizen and environmental groups, a native American organization, and individuals. The commenters offered over 200 specific comments and represented a diversity of views. The commenters addressed a wide range of issues concerning the decommissioning and closure of the WVDP and West Valley site. The reaction to the draft policy statement was generally supportive. However, viewpoints were expressed on the LTR and LTR guidance and how both should be applied at West Valley. In addition, there were comments on NRC's process for prescribing the decommissioning criteria and other issues specific to West Valley.

IV. Summary of Public Comments and Responses to Comments

The following sections A through I represent major subject areas and describe the principal public comments received on the draft policy statement (organized according to the major subject areas) and present NRC responses to those comments.

(A) Comments on the LTR (restricted release; institutional controls; as low as reasonably achievable (ALARA); financial assurance; alternate criteria; time line for dose calculations);

(B) Comments on LTR guidance (critical group, engineered barriers, cost/benefit analysis);

(C) Comments on implementing the LTR (continued Federal or State onsite presence, perpetual license);

(D) Comments on NRC's process for prescribing the decommissioning criteria (when to prescribe the criteria; use of the LTR ''Generic Environmental Impact Statement'' (GEIS) to support the use of the LTR at West Valley; NRC's National Environmental Policy Act (NEPA) obligation for prescribing the West Valley decommissioning criteria);

(E) Comments on jurisdictional aspects of prescribing the decommissioning criteria;

(F) Comments on the use of incidental waste criteria at West Valley;

(G) Comments related to how the site should be decommissioned (waste disposition, consideration of pathways for dose, and contaminant transport);

(H) Comments on the wording of the draft policy statement (use of the word ''prescribe,'' paraphrasing the LTR and other statements on West Valley); and,

(I) Other comments (implications of the policy statement regarding native Americans, transuranic waste issue).

The comments received from the public in writing during the comment period and verbally during the January 5, 2000, public meeting have been factored into the Commission's decision-making on this final policy statement.

A. Comments on the LTR

The draft policy statement presented NRC's LTR as the decommissioning criteria for the WVDP and the West Valley site. Although there was general support for the use of the LTR as the decommissioning criteria for both the WVDP and West Valley site, there were a number of comments on the LTR. Specifically:

A.1 Comment. A number of commenters were concerned that the use of the LTR's restricted release concept, which includes the use of institutional controls, to decommission West Valley may not be appropriate because of the magnitude of the waste currently on-site and the potential for this waste to provide an unacceptable dose to members of the public if controls fail.

A. 2 Response. The LTR criteria consider doses to members of the public from the loss of institutional controls. The loss of institutional controls will need to be considered in the DOE/NYSERDA EIS.[8] Absent an exemption from the LTR provision in 10 CFR part 20, a site, or part thereof, that cannot meet the restricted release provisions of the LTR, must remain under an NRC license. The Commission will consider

addition, if a long-term or perpetual license is determined to be appropriate, the NRC takes no position on which entity should be the long-term licensee as that decision, as well as decisions regarding long term financial contributions, should be made pursuant to negotiations involving DOE, New York, and possibly the U.S. Congress. Also, under the WVDP Act, the NRC is only addressing the public health and safety aspects of decommissioning selected portions of the site. Other potential issues between DOE and NYSERDA concerning the West Valley Site are not within NRC's authority to resolve.

[6] The dose methodology used in 10 CFR part 61 subpart C is different from that used in the newer 10 CFR part 20 subpart E. However, the resulting allowable doses are comparable and NRC expects DOE to use the newer methodology in 10 CFR part 20 subpart E. Part 61 is based on International Commission on Radiological Protection Publication 2 (ICRP 2) and part 20 is based on ICRP 26.

[7] Applying the LTR, the total annual dose to an average member of the critical group for the site, including the resulting does from the incidental waste, should be less than or equal to 25 mrem/yr TEDE. The Commission is not establishing a separate dose standard for the incidental waste such that the average member of the critical group potentially receive a dose of 25 mrem/yr TEDE from the rest of the NRC-licensed site and 25 mrem/yr TEDE from the incidental waste.

[8] DOE has decided to descope the draft 1996 EIS into two separate EISs. DOE will be the lead agency on the EIS that will address WVDP facility decontamination and management of waste currently stored at the site. NRC expects to be kept informed of progress as required under the DOE/NRC Memorandum of Understanding (MOU). DOE and NYSERDA will be the lead agencies on the EIS that will address decommissioning. NRC expects to participate as an EIS cooperating agency. Hereafter, this second EIS where NRC will be a cooperating agency will either be referred to as the decommissioning EIS or the DOE/NYSERDA EIS, unless otherwise noted.

granting an exemption to the LTR criteria if it determines the exemption is authorized by law and would not result in undue hazard to life or property. The Commission intends to involve the public in the processing of any exemption request consistent with the ''public participation'' provision in 10 CFR 20.1405, and will involve the Environmental Protection Agency (EPA) if the exemption request involves criteria greater than the dose criteria of 10 CFR 20.1402, 20.1403(b), or 20.1403(d)(1)(i)(A). Such an exemption request will also require the approval of the Commission consistent with 10 CFR 20.1404(b).

A. 3 Comment. Some commenters also were concerned about the adequacy of the LTR's financial assurance requirements for maintaining institutional controls for restricted release at West Valley, especially if the financial assurance relies on future Government appropriations that are not guaranteed.

A. 4 Response. In general, it is assumed that when a Government agency certifies that it will seek appropriations, to maintain institutional controls for the purposes of protecting public health and safety, the appropriations will be authorized. The Commission believes that it is reasonable to expect Federal and State agencies to meet their commitments to obtain funding for institutional controls to provide for the protection of the public health and safety.

A. 5 Comment. A number of commenters were also concerned that the time line specified for dose calculations in the LTR (1000 years) is too short for difficult sites like West Valley.

A. 6 Response. In the development of the LTR, the Commission considered comments seeking a time period for dose analysis longer than 1000 years. Section F.7 in the LTR ''Statement of Considerations,'' 62 FR 39058 (July 21, 1997). The Commission concluded that for the types of facilities and source terms considered, it was reasonable to use a 1000-year period. However, the West Valley site presents some unique challenges in that significant quantities of mobile, long-lived radionuclides are present on site. Because under NEPA an evaluation of reasonably foreseeable impacts is required, the Commission believes that an analysis of impacts beyond 1000 years should be provided in the DOE/NYSERDA EIS. Thus, information will need to be evaluated to determine if peak doses might occur after 1000 years and to define dose consequences and impacts on potential long-term management of residual radioactivity at the site. Depending upon the outcome of the EIS review, the Commission may need to consider the need for environmental mitigation.

A. 7 Comment. Some commenters were concerned about the possible application of alternate criteria, as allowed under the LTR, to West Valley, or that the policy statement should at least clearly identify the dose limit cap under alternate criteria.

A. 8 Response. In addition to the unrestricted release limit of 25 mrem/yr TEDE, the LTR also contains alternate criteria for restricted release, which allows for a dose limit of up to 100 mrem/yr TEDE, with restrictions in place, and caps the public dose limit at 100 or 500 mrem/yr TEDE if the restrictions fail. Applying alternate criteria to a specific site requires opportunities for public involvement, coordination with the EPA, and direct approval of the Commission. The alternate criteria in the LTR were developed for difficult sites to minimize the need to consider exemptions to the LTR, although exemptions also may be considered. Under appropriate circumstances and based on a site-specific analysis, the Commission considers the application of alternate criteria protective of public health and safety. Absent a detailed site-specific analysis, it is premature for the Commission to make any judgments, at this time, on the acceptability or non-acceptability of applying alternate criteria or exemptions to the WVDP or any portion of the NRC-licensed site. In any event, neither the alternate criteria in the LTR nor exemptions will be approved by the Commission without full prior public participation, involvement of the EPA, and a Commission determination that there is reasonable assurance that there would not be undue hazard to life and property.

A. 9 Comment. There were also comments about the use of the ALARA process in the LTR at West Valley. Some believed that the ALARA process might be used to justify dose limits higher than those allowed by the LTR.

A. 10 Response. As stated previously, the LTR does allow for releases with different dose limits. Generally, ALARA is used to reduce doses below authorized limits. Under the LTR, the ALARA process is not used to permit doses above the 25 mrem/yr TEDE limit without restrictions, the 100 mrem/yr TEDE limit with restrictions, or the 500 mrem/yr TEDE cap if restrictions fail.

B. Comments on LTR guidance

A variety of comments were received on NRC's LTR guidance as it relates to West Valley. Since the time that NRC's LTR became final in 1997, the NRC staff has been developing guidance to support it. In September 2000, the NRC released guidance for decommissioning, in the form of a standard review plan (SRP) (''NMSS Decommissioning Standard Review Plan,'' NUREG–1727).

B. 1 Comment. A number of commenters expressed concern with how the critical group would be defined for dose assessment purposes.

B. 2 Response. For the LTR, the critical group means the group of individuals reasonably expected to receive the greatest exposure to residual radioactivity for any applicable set of circumstances (10 CFR 20.1003). The ''Statement of Considerations'' for the LTR notes that the critical group would be the group of individuals reasonably expected to be the most highly exposed, considering all reasonable potential future uses of the site, based on prudently conservative exposure assumptions and parameter values within modeling calculations. NRC's SRP for decommissioning addresses two generic critical group scenarios—the ''resident farmer'' and the ''building occupancy'' scenarios. The SRP also presents approaches for establishing site-specific critical groups based on specific land use, site restrictions, and/or site-specific physical conditions. DOE/NYSERDA derivation of the critical groups for West Valley will need to be addressed in the EIS documents. In addition to NRC review and comment, the EIS documents will be available for public review and comment.

B. 3 Comment. There were also several comments relating concerns that long-term stewardship costs and impacts on special populations will not be properly factored into the cost/benefit analysis, or that there should be better guidance provided on what should be considered in the cost/benefit analysis.

B. 4 Response. DOE and NYSERDA will determine the extent to which these issues are covered in the DOE/NYSERDA EIS. In addition, NRC will review and comment on any cost/benefit analysis in the EIS. The cost/benefit analysis that DOE/NYSERDA develop for West Valley will need to be part of the EIS documents available for public review and comment.

B. 5 Comment. Some commenters suggested that there should be criteria for what are allowable engineered

barriers and whether or not they are considered institutional controls.

B. 6 Response. Because of the wide range of residual radioactive contamination encountered at decommissioning sites licensed by NRC, the LTR and NRC's decommissioning guidance are not prescriptive as to the criteria for, or acceptability of, site-specific institutional controls and engineered barriers. The ''Statement of Considerations'' for the LTR might be read to conclude that engineered barriers are included within institutional controls. However, neither term is defined. In the Commission's view, ''engineered barriers'' referred to in the ''Statement of Considerations'' for the LTR are distinct and separate from institutional controls. Used in the general sense, an engineered barrier could be one of a broad range of barriers with varying degrees of durability, robustness, and isolation capability. Thus, NRC guidance in Appendix I of the SRP on the LTR distinguishes institutional controls from physical controls and engineered barriers. Institutional controls are used to limit intruder access to, and/or use of, the site to ensure that the exposure from the residual radioactivity does not exceed the established criteria. Institutional controls include administrative mechanisms (e.g., land use restrictions) and may include, but not be limited to, physical controls (e.g., signs, markers, landscaping, and fences) to control access to the site and minimize disturbances to engineered barriers. There must be sufficient financial assurance to ensure adequate control and maintenance of the site and institutional controls must be legally enforceable and the entity charged with their enforcement must have the capability, authority, and willingness to enforce the controls. Generally, engineered barriers are passive man-made structures or devices intended to improve a facility's ability to meet a site's performance objectives. Institutional controls are designed to restrict access, whereas engineered barriers are usually designed to inhibit water from contacting waste, limit releases, or mitigate doses to intruders. The isolation capability, durability, and robustness of a specific barrier will need to be evaluated in the DOE/NYSERDA EIS. The ability of a barrier to inhibit access of the inadvertent intruder is a separate issue from whether a barrier is an institutional control. The dose analyses for a site with engineered barriers will need to consider the reasonableness of a breach by an inadvertent intruder.

C. Comments on Implementing the LTR

C. 1 Comment. There were some comments identifying who should be the long-term steward of the site if long-term stewardship is required as part of site closure. Some commenters also provided suggestions on how site long-term stewardship should be maintained at West Valley if it is needed (onsite staff, perpetual license).

C. 2 Response. NRC expects that these site-specific issues will be covered in the DOE/NYSERDA EIS and addressed in the preferred alternative. The identification of a long-term custodian is not an NRC responsibility but will be determined from negotiations involving DOE and NYSERDA and possibly the U.S. Congress. From the NRC perspective, both DOE and NYSERDA represent governmental entities and either would be acceptable as a long-term custodian.

C. 3 Comment. One commenter requested consideration of how the LTR would be implemented on the decommissioned portions of the site if there were areas of the site that could not meet the LTR.

C. 4 Response. Although the LTR does not specifically address differing release standards on a single site, NRC recognizes that the approach to decommissioning at West Valley may include portions of the site being released for unrestricted use, and portions of the site being released for restricted use, as well as portions of the site remaining under license, because of a failure to meet the LTR. In the Commission's view, the LTR is sufficiently flexible to allow for such circumstances. In particular, the Commission believes that for those portions of the site that are unable to demonstrate compliance with the LTR's restricted release requirements, the dose limits should be viewed as goals in order to ensure that cleanup continues to the maximum extent that is technically and economically feasible. The Commission also believes that after cleanup to the maximum extent technically and economically feasible is accomplished, alternatives to release under the LTR criteria may need to be contemplated. Specific examples of these alternatives are a perpetual license for some parts of the site or exemptions from the LTR. The NRC expects that these issues will be fully addressed in the DOE/NYSERDA EIS.

D. Comments on NRC's Process for Prescribing the Decommissioning Criteria

D.1. DOE recommended, for the reasons described in comments D.1.1, D.1.3, and D.1.5 below, that NRC withhold assigning the LTR as the decommissioning criteria until NRC does a site-specific analysis of the environmental effects of decommissioning West Valley.

D.1.1 Comment. The LTR GEIS (NUREG–1496) does not support the use of the LTR at a complex site like West Valley; therefore, a specific EIS for this action needs to be completed by NRC to finalize the criteria.

D.1.2 Response. Although the LTR GEIS did not specifically address the decommissioning of a spent fuel reprocessing site, it did evaluate the decommissioning of a range of reference facilities (e.g., fuel cycle facilities and reactors). In promulgating the LTR, the Commission stated in Section VI of the ''Statement of Considerations'' that it will conduct an environmental review to ''determine if the generic analysis encompasses the range of environmental impacts at the particular site.'' The Commission further stated that it ''will conduct an independent environmental review for each site-specific decommissioning decision where land use restrictions or institutional controls are relied upon by the licensee or where alternative criteria are proposed'' as it recognized that the environmental impacts for these cases cannot be analyzed on a generic basis. Thus, the environmental impacts from the application of the criteria to the WVDP will need to be evaluated for the various alternative approaches being considered in the process before NRC decides whether to accept the preferred alternative for meeting the criteria permitted by the LTR. NRC expects to be able to rely on the DOE/NYSERDA EIS for this purpose. NRC does not anticipate the need to prepare its own duplicative EIS as NRC can consider the environmental impacts described in the DOE/NYSERDA EIS in approving the particular decommissioning criteria for the WVDP under the LTR. As an EIS cooperative agency, NRC may adopt all or parts of the lead EIS agency's NEPA documents. Under this arrangement, if NRC is satisfied with the final DOE/NYSERDA EIS, then NRC will adopt it to fulfill its NEPA responsibilities under the WVDP Act. If NRC is not satisfied with the final DOE/NYSERDA EIS, then it will adopt as much of it as possible and modify or supplement it as necessary. In such a situation, NRC would publish its own draft EIS document for public review and comment before finalizing it. Once finalized, NRC's West Valley NEPA responsibilities would be fulfilled under the WVDP Act.

The WVDP Act does not address license termination for the site. The actual license termination for the site, if and when pursued, will be conducted under the Atomic Energy Act (AEA) of 1954, as amended. At the time of NRC license termination under the AEA (if license termination is pursued), NRC will need to conduct an environmental review to determine if an EIS is necessary to support license termination.

D.1.3 Comment. The NRC's prescription of decommissioning criteria is not being coordinated with the current NEPA process as suggested by the DOE/NRC Memorandum of Understanding (MOU) on West Valley.

D.1.4 Response. The process described in the DOE/NRC MOU (Section B (4)), for consulting on a site-specific analysis of decommissioning requirements was developed to allow DOE and NRC to evaluate a range of approaches to specifically address the decommissioning of the WVDP. Thereafter, NRC was to prescribe the decommissioning criteria. At the time the MOU was signed, no comprehensive general criteria existed for decommissioning NRC-licensed sites. Decommissioning criteria were determined on a case-by-case basis. However, through the rulemaking process completed in 1997, which promulgated the LTR, there was an evaluation of various regulatory approaches for decommissioning NRC-licensed sites and the selection of a range of regulatory approaches with criteria, in the final rule.

Except as provided in 10 CFR 20.1401, the LTR applies to all NRC's licensed sites. The Commission recognized, as noted in the ''Statement of Considerations'' for the LTR, that there would be sites with complex decommissioning issues that would be resolved by site-specific environmental reviews which considered various alternative methods for decommissioning and application of the LTR. In the Commission's view, the use of the two-step prescribing process—first, the decision to use the LTR, and second, to use the DOE/NYSERDA EIS, to consider the impacts of the different approaches for decommissioning, before deciding whether to accept the particular approach that DOE intends to use to meet the LTR—is consistent with the intent of the MOU that various approaches be analyzed in developing the WVDP decommissioning criteria.

D.1.5 Comment. Finalizing the LTR now as the decommissioning criteria for the WVDP at the West Valley site limits the options for closure of the NRC-licensed Disposal Area (NDA).

D.1.6 Response. The Commission does not believe that prescribing the LTR criteria for the WVDP at the West Valley site as the applicable decommissioning goal for the entire NRC-licensed site will limit DOE from developing acceptable closure options for the NDA or any other part of the NRC-licensed site. Prescribing the LTR now is warranted because NYSERDA, as a licensee of the Commission, is subject to the LTR after NYSERDA's NRC license is reactivated at the conclusion of the WVDP. It follows that DOE should also be subject to the LTR as it is the surrogate for NYSERDA in decommissioning facilities used for the project. Therefore, it is appropriate to prescribe the LTR now for the WVDP, with the site-specific decommissioning issues resolved through the process described in Response D.1.4 above. Applying the LTR to the WVDP will provide an opportunity to DOE, as would be given to any licensee, to consider a range of approaches to achieve acceptable decommissioning, consistent with public dose limits. If parts of the NRC-licensed site cannot meet the LTR, the Commission will consider alternatives to the criteria in the LTR if it can be demonstrated that public health and safety will be protected. The NRC expects that these issues will be fully addressed in the DOE/NYSERDA EIS.

E. Comments on Jurisdictional Aspects of Prescribing the Decommissioning Criteria

E.1 Comment. Many commenters suggested that, because the State-licensed Disposal Area (SDA) is immediately adjacent to the WVDP and part of the West Valley site, the allowable dose from the closure and/or decommissioning of it should be considered comprehensively with the allowable dose from the NRC regulated part of the site.

E.2 Response. NRC's authority only extends to the NRC-licensed portion of the site. It also should be noted that the LTR recognizes that people can be exposed to up to four sources of radiation and still meet the nationally and internationally accepted public dose limit of 100 mrem/yr TEDE in part 20. In considering the environmental impacts for the entire site, the DOE/NYSERDA EIS will need to consider the number of sources to which the critical group may be exposed. However, NRC continues to dialogue with State representatives to exchange information on issues of mutual interest regarding potential sources of public exposure.

E.3 Comment. A few comments were made indicating that NRC ought to prescribe the dose limits in EPA's decommissioning guidance to West Valley, because they are more protective and could be applied to the site after NRC regulatory authority ceases. Likewise, a comment was made that the decommissioning criteria issue between NRC and EPA should be resolved before the criteria are prescribed.

E.4 Response. The Commission believes that the LTR dose limits plus ALARA requirements provide protection comparable to dose limits preferred by EPA in its guidance documents. The Commission notes that the LTR was promulgated by the Commission in 1997 pursuant to an Administrative Procedure Act rulemaking accompanied by a generic EIS and voluminous regulatory analysis, including consideration of numerous public comments. EPA's guidance documents have gone through no such public process. The Commission believes that decommissioning the site to the LTR criteria ensures that public health and safety and the environment will be protected. Although there is a lack of agreement between NRC's rule and EPA's guidance documents on the appropriate upper bounds on decommissioning criteria, the NRC practice of applying ALARA principles to NRC dose limits will most likely result in an NRC approved decommissioned site that satisfies the EPA criteria as well. In fact, EPA has indicated that it believes that the 25 mrem/yr TEDE cleanup dose limit in the LTR will be ''protective at this site.'' *See* Letter from Paul Giardina, EPA to John Greeves, NRC (July 23, 2001). Because the LTR requirements do ensure adequate protection of the public health and the environment, and, as indicated in the preceding paragraph, EPA agrees with this conclusion for West Valley, the Commission believes that it is not necessary to wait for a formal resolution of the differences between NRC and EPA on generic decommissioning standards before proceeding with prescribing site-specific decommissioning criteria for the WVDP. As stated previously, EPA will be involved in any proposal to use alternate criteria in the LTR or exemptions from 10 CFR part 20, if so requested.

F. Comments on the Use of Incidental Waste Criteria at West Valley Site

F.1 Comment. Many comments were received concerning the use of the incidental waste criteria at West Valley. Most commenters did not want NRC to allow for the ''reclassification'' of any HLW at this site to waste incidental to reprocessing. If it were allowed, it

should be done in a way that provides for public participation. One commenter agreed that it will have to be done, but that the Commission should prescribe the criteria that are necessary and appropriate for the incidental waste determination. One other commenter believes that use of DOE's Order 435.1 is the appropriate process for reclassifying residual HLW as incidental.

F.2 Response. Section 6 (4) of the WVDP Act defines HLW as including both (1) liquid wastes which are produced directly in reprocessing, dry solid material derived from such liquid waste and (2) such other material as the Commission designates as HLW for the purposes of protecting the public health and safety. Since 1969, the Commission has recognized the concept of waste incidental to reprocessing, concluding that certain material that otherwise would be classified as HLW need not be disposed of as HLW and sent to a geologic repository because the residual radioactive contamination after decommissioning is sufficiently low as not to represent a hazard to the public health and safety. Consequently, incidental waste is not considered HLW. See, Proposed Rule—Siting of Commercial Fuel Reprocessing Plants and Related Waste Management Facilities (34 FR 8712; June 3, 1969), Final Rule—Siting of Commercial Fuel Reprocessing Plants and Related Waste Management Facilities (35 FR 17530; November 14, 1970), Advance Notice of Proposed Rule-making to Define HLW (52 FR 5992, 5993; February 27, 1987), Proposed Rule—Disposal of Radioactive Waste (53 FR 17709; May 18, 1988), Final Rule—Disposal of Radioactive Waste (54 FR 22578; May 25, 1989), and Denial of Petition for Rulemaking: States of Washington and Oregon, (58 FR 12342; March 3, 1993).

The Commission believes that practical considerations mandate early resolution of the criteria that should guide the incidental waste determination. Vitrification of the high-level wastes at West Valley is nearing completion, at which point DOE intends to close down the vitrification facility. To delay providing the Commission's view for incidental waste could adversely impact the DOE, as it may prove extraordinarily expensive after the vitrification facility is shut down to provide vitrification capacity for any additional waste that must be shipped elsewhere for disposal. Indeed, in light of the fact that the site will ultimately revert to control by NYSERDA under an NRC license, both NYSERDA and NRC have an interest in ensuring that the incidental waste determination need not be revisited.

In light of these considerations, the Commission is now providing the following criteria for incidental waste determinations.

(1) The waste should be processed (or should be further processed) to remove key radionuclides to the maximum extent that is technically and economically practical; and

(2) The waste should be managed so that safety requirements comparable to the performance objectives in 10 CFR part 61 subpart C, are satisfied.

The resulting calculated dose from the incidental waste is to be integrated with all the other calculated doses from the remaining material at the entire NRC-licensed site to ensure that the LTR criteria are met. This is appropriate because the Commission does not intend to establish separate dose standards for various sections of the NRC-licensed site.

Previously the NRC has provided advice to DOE concerning DOE's classification of certain waste as incidental waste for clean-up of HLW storage tanks at both Hanford and Savannah River. As noted above, NRC intends to apply the LTR criteria for the WVDP at the West Valley site, reflecting the fact that the applicable decommissioning goal for the entire NRC-licensed site is in compliance with the requirements of the LTR. The Commission has decided that the most recent advice provided to DOE for the classification of incidental waste at the Savannah River site,[9] with some additional modifications, as the appropriate criteria that should be applicable to West Valley. These criteria are risk-informed and performance-based in that the criteria allow DOE the flexibility to develop innovative approaches to meeting the performance objectives in part 61. In effect, DOE should undertake cleanup to the maximum extent that is technically and economically practical and should achieve performance objectives consistent with those we demand for the disposal of low-level waste. If satisfied, these criteria should serve to provide protection of the public health and safety and the environment and the resulting calculated dose would be integrated with the resulting calculated doses for all other remaining material at the NRC-licensed site. It is the Commission's expectation that it will apply this criteria at the WVDP at the site following the completion of DOE's site activities. In this regard, the impacts of identifying waste as incidental to reprocessing and not HLW should be considered in the DOE's environmental reviews.

[9] *See* NRC Staff Requirements Memorandum ''SECY–99–0284—Classification of Savannah River Residual Tank Waste as Incidental,'' May 30, 2000.

G. Comments Related to How the Site Should Be Decommissioned

G.1 Comment. There were many comments and suggestions that all the waste at this site should be perhaps temporarily stabilized, or packaged and perhaps temporarily stored, but ultimately removed from the site. There were also some comments on what are the important pathways for, and man-made barriers to control, contaminant transport at the site.

G.2 Response. The Commission appreciates the public's identification of, and input on, these issues. The decisions related to alternative approaches to decommissioning the West Valley site will be evaluated in the DOE/NYSERDA EIS, and reviewed by NRC for their ability to protect public health and safety and the environment. The EIS will also be available for public comment before being finalized.

H. Comments on the Wording of the Draft Policy Statement

H.1 Comment. Several comments were made about the last part of a sentence in the Draft Policy Statement under the section entitled ''Decommissioning Criteria for the WVDP.'' It states that ''* * * following the completion of DOE/NYSERDA's EIS and selection of its preferred alternative, the NRC will verify that the specific criteria identified by DOE is within the LTR and will prescribe the use of specific criteria for the WVDP.'' Many suggested that prescribing the use of the specific criteria after the selection of the preferred alternative in the EIS is confusing, not what is meant by the WVDP Act, and would allow adjustment of the criteria after the EIS is completed.

H.2 Response. As addressed above in response to the various comments, the Commission's intent is to prescribe the generally applicable requirements of the LTR now, before the completion of the site-specific EIS. After completion of the site-specific DOE/NYSERDA EIS, NRC will evaluate the compliance status of the preferred alternative with respect to the LTR, as described in the Commission's final policy statement. This is a two-step process. The first step is prescribing the LTR, a set of criteria that allows for unrestricted releases, restricted releases, and alternative releases, that applies to all NRC licensees. Prescribing decommissioning criteria now for the WVDP allows DOE to develop alternative approaches for

meeting those criteria and consider their impacts in its site-specific EIS.

The second step is for NRC to evaluate on a site-specific basis the approach for meeting the LTR. This will be done after the DOE/NYSERDA EIS is completed and NRC adopts it or otherwise produces its own NEPA evaluation of the site-specific criteria developed in the DOE/NYSERDA EIS. NRC will be evaluating DOE's and NYSERDA's preferred alternative for meeting the LTR and other alternatives presented in the DOE/NYSERDA EIS.

This process is in accordance with the ''Statement of Considerations'' for the LTR, which describes the relationship between the GEIS for the LTR and site-specific decommissioning actions. A site-specific EIS is prepared in cases where the range of environmental impacts of the alternatives at a specific site may not be within those considered in the GEIS for the LTR. This is similar to the approach that NYSERDA, as an NRC licensee, would need to meet if the license were not being held in abeyance. The Commission is satisfied that this approach is within the intent of the WVDP Act for the prescription of decommissioning requirements by NRC.

The WVDP Act does not address license termination for the site. The actual license termination for the site, if and when possible, will be conducted under the AEA, as amended. At the time of NRC license termination under the AEA (if license termination is pursued), NRC will need to conduct an environmental review to determine if an EIS is necessary to support actual license termination. The language from the draft policy statement was changed in the final policy statement to reflect the process described above.

H.3 Comment. The policy statement should not paraphrase the LTR and others' statements on West Valley.

H.4 Response. The Commission was attempting to provide context to the draft policy statement by paraphrasing the LTR or others' statements on West Valley. To avoid confusion or misinterpretation in the Final Policy Statement, it will contain a disclaimer to the effect that notwithstanding any paraphrasing of the LTR in the Policy Statement, the language of the LTR itself is controlling in determining how it is to be applied at West Valley. The paraphrasing of others' statements will be avoided.

I. Other Comments

I.1 Comment. What are the implications of the policy statement regarding NRC's policies regarding Native Americans.

I.2 Response. NRC staff has examined the draft policy on decommissioning criteria for the WVDP and has not identified any implications in relation to the Commission's guidance regarding Native Americans. The Commission has directed the NRC staff to implement the spirit and letter of President Clinton's April 29, 1994, Executive Memorandum to ensure that the rights of sovereign Tribal governments are fully respected and to operate within a government-to-government relationship with Federally-recognized Native American Tribes. In addition, the staff has been directed to address Native American issues on a case-by-case basis, operating with Tribal Governments on a government-to-government basis. In response to the interest expressed by the Seneca Nation of Indians in NRC activities at WVDP, the NRC staff has added the Seneca Nation to its service list which will provide the Seneca Nation with copies of documents and meeting notices related to NRC's activities at West Valley that the NRC may publically release. The NRC staff will address issues raised by the Seneca Nation of Indians in accordance with the Commission's guidance.

I.3 Comment. One commenter claims that NRC is required by law to define ''transuranic waste'' for West Valley and determine the disposition of that waste.

I.4 Response. Section 6(5) of the WVDP Act defines transuranic waste for the WVDP in terms of radioisotopes and the lower limit of concentration of those isotopes. It also states that NRC has the authority to prescribe a different concentration limit to protect public health and safety. NRC's position on this issue is detailed in a letter from M. Knapp, NRC, to W. Bixby, DOE, dated August 18, 1987. This letter states that, to demonstrate protection of public health and safety, the transuranic concentration of project wastes acceptable for on-site disposal will be such that, by analysis, safety requirements comparable to the performance objectives in 10 CFR part 61 subpart C are satisfied. The resulting calculated dose from the transuranic waste is to be integrated with all the other calculated doses from the remaining material at the NRC-licensed site to ensure that the LTR criteria are met. As with incidental waste, the Commission is not establishing a separate dose standard that applies solely to the transuranic waste.

V. Final Policy Statement

Statement of Policy

Decommissioning Criteria for the West Valley Demonstration Project (WVDP)

Under the authority of the WVDP Act, the Commission is prescribing NRC's License Termination Rule (LTR) (10 CFR part 20, subpart E) as the decommissioning criteria for the WVDP, reflecting the fact that the applicable decommissioning goal for the entire NRC-licensed site is in compliance with the requirements of the LTR. The criteria of the LTR shall apply to the decommissioning of: (1) The High Level Waste (HLW) tanks and other facilities in which HLW, solidified under the project, was stored; (2) the facilities used in the solidification of the waste; and (3) any material and hardware used in connection with the WVDP. Also under authority of the WVDP Act, the Commission is issuing criteria for the classification of reprocessing wastes that will likely remain in tanks at the site after the HLW is vitrified, subsequently referred to as ''incidental waste.''

The resulting calculated dose from the WVDP at the West Valley site is to be integrated with all other calculated doses to the average member of the critical group from the remaining material at the entire NRC-licensed site to determine whether the LTR criteria are met. This is appropriate because the Commission does not intend to establish separate dose standards for various sections of the NRC-licensed site. The LTR does not apply a single public dose criterion. Rather, it provides for a range of criteria. Briefly stated, for unrestricted release, the LTR specifies a dose criterion of 25 mrem/yr total effective dose equivalent (TEDE) to the average member of the critical group plus as low as reasonably achievable (ALARA) considerations (10 CFR 20.1402). For restricted release, the LTR specifies an individual dose criterion of 25 mrem/year TEDE plus ALARA considerations using legally enforceable institutional controls established after a public participatory process (10 CFR 20.1403). Even if institutional controls fail, individual doses should not exceed 100 mrem/yr TEDE . If it is demonstrated that the 100 mrem/yr TEDE criterion in the event of failure of institutional controls is technically not achievable or prohibitively expensive, the individual dose criterion in the event of failure of institutional controls may be as high as 500 mrem/yr TEDE. However, in circumstances where restricted release is required, if the 100 mrem/yr TEDE criterion is exceeded, and/or the use of alternate criteria has

been determined, the area would be rechecked by a responsible government entity no less frequently than every 5 years and resources would have to be set aside to provide for any necessary control and maintenance of the institutional controls. Finally, the LTR permits alternate individual dose criteria of up to 100 mrem/yr TEDE plus ALARA considerations for restricted release, with institutional controls established after a public participatory process (10 CFR 20.1404). The Commission itself must approve use of the alternative criteria, after coordination with the U.S. Environmental Protection Agency (EPA) and after consideration of the NRC staff's recommendations and all public comments.[10]

The Commission also recognizes that decommissioning of the West Valley site will present unique challenges, which may require unique solutions. As a result, the final end-state may involve a long-term or even a perpetual license or other innovative approaches for some parts of the site where clean up to the LTR requirements are prohibitively expensive or technically impractical. It is important that all parts of the site be decommissioned to the extent technically and economically feasible. Therefore, in addition, the Commission expects decontamination to the maximum extent technically and/or economically feasible for any portion of the site remaining under a long term or perpetual license or for which an exemption from the LTR is sought. In sum, the Commission believes that for those portions of the site that are unable to demonstrate compliance with the LTR's restricted release requirements, the dose limits should be viewed as goals, in order to ensure that cleanup continues to the maximum extent that is technically and economically feasible. If complying with the LTR's restricted release requirements is technically impractical or prohibitively expensive, then an exemption from the LTR may be appropriate, provided that protection of the public and the environment can be maintained.

The Commission's application of the LTR to the WVDP is a two-step process: (1) NRC is now prescribing the application of the LTR; and (2) after the completion of the site-specific Department of Energy (DOE)/New York State Energy Research and Development Authority (NYSERDA) Environmental Impact Statement (EIS)[11] and selection of the preferred alternative, NRC will verify that the approach proposed by DOE is appropriate. The WVDP Act does not address license termination of the NRC license for the site, or portions thereof, which will be conducted (if license termination is possible and pursued) under the Atomic Energy Act (AEA) of 1954, as amended. If full or partial license termination of the NRC license is pursued, at that time NRC will need to conduct an environmental review to determine if an EIS is necessary to support license termination.

Decommissioning Criteria for the NRC-Licensed Disposal Area (NDA) and State-Licensed Disposal Area (SDA)

NRC will apply the criteria in the LTR to the NDA within the West Valley site, because the NDA is under NRC jurisdiction. However, the NDA presents some unique challenges in that some of this material contains significant quantities of mobile, long-lived radionuclides which could potentially remain in this facility. It is recognized that because of the nature of radioactivity at West Valley, reasonably foreseeable impacts might occur after 1000 years, under certain scenarios. Under NEPA, an evaluation of the reasonably foreseeable impacts is required. Therefore, the Commission believes that an analysis of impacts beyond 1000 years should be provided in the DOE/NYSERDA EIS which will be subject to public comment.

NRC does not have regulatory authority to apply the LTR criteria to the SDA adjacent to the WVDP site boundary, because the SDA is regulated by the State of New York. However, NRC recognizes that a cooperative approach with the State to the extent practical should be utilized to apply the LTR criteria in a coordinated manner to the NRC-licensed site and the SDA.

Decommissioning Criteria for License CSF–1 (NRC Site License)

The criteria in the LTR will also apply to the termination of NYSERDA's NRC license on the West Valley site after that license is reactivated. For those portions of the site covered by the WVDP Act, it is NRC's intent to authorize that any exemptions or alternate criteria authorized for DOE to meet the provisions of the WVDP Act will also apply to NYSERDA at the time of site license termination, if license termination is possible. The NRC site license termination is not addressed in the WVDP Act. Therefore the NRC site license termination is subject to the provisions of the Atomic Energy Act of 1954 as amended.

Use of Incidental Waste Criteria at West Valley

Section 6 (4) of the WVDP Act defines HLW as including both (1) liquid wastes which are produced directly in reprocessing, dry solid material derived from such liquid waste and (2) such other material as the Commission designates as HLW for the purposes of protecting the public health and safety. The Commission believes that practical considerations mandate early resolution of the criteria that will guide the classification of incidental waste. The vitrification of the wastes at West Valley is nearing completion, at which point DOE intends to close down the vitrification facility. To delay defining classification criteria for incidental waste could adversely impact the DOE as it may prove extraordinarily expensive after the vitrification facility is shut down to provide vitrification capacity for any additional waste that must be shipped elsewhere for disposal. Indeed, in light of the fact that the site will ultimately revert to control by NYSERDA under an NRC license, both NYSERDA and NRC have an interest in ensuring that the incidental waste determination need not be revisited.

In light of these considerations, the Commission is now providing the following criteria that should be applied to incidental waste determinations.

(1) The waste should be processed (or should be further processed) to remove key radionuclides to the maximum extent that is technically and economically practical; and

(2) The waste should be managed so that safety requirements comparable to the performance objectives in 10 CFR part 61 subpart C, are satisfied.[12]

Consistent with the overall approach in applying the LTR to the WVDP and to the entire NRC-licensed site following

[10] The material set out in the text is a brief summary of the LTR. Notwithstanding the words used in the text, the language of the LTR governs this matter.

[11] DOE has decided to descope the draft 1996 EIS into two separate EISs. DOE will be the lead agency on the EIS that will address WVDP facility decontamination and management of waste currently stored at the site. NRC expects to be kept informed of progress as required under the DOE/NRC Memorandum of Understanding (MOU). DOE and NYSERDA will be the lead agencies on the EIS that will address decommissioning. NRC expects to participate as an EIS cooperating agency. Hereinafter, this second EIS where NRC will be a cooperating agency will either be referred to as the decommissioning EIS or the DOE/NYSERDA EIS, unless otherwise noted.

[12] The dose methodology used in 10 CFR part 61 subpart C is different from that used in the newer 10 CFR part 20 subpart E. However, the resulting allowable doses are comparable and NRC expects DOE to use the newer methodology in 10 CFR part 20 subpart E. part 61 is based on International Commission on Radiological Protection Publication 2 (ICRP 2) and part 20 is based on ICRP 26.

conclusion of the WVDP, the resulting calculated dose from the incidental waste is to be integrated with all the other calculated doses from material remaining material at the entire NRC-licensed site.

Previous Burials Authorized Under 10 CFR Part 20

The ''Statement of Considerations'' for the LTR, Section C.3, Other Exemptions (62 FR 39074) provided that in regard to past burials the Commission ''* * * would continue to require an analysis of site-specific overall impacts and costs in deciding whether or not exhumation of previous buried waste is necessary for specific sites. In addition, the general exemption provisions of 10 CFR part 20 are available to consider unique past burials on a case-by-case basis.'' The NDA contains significant amounts of buried radioactive material that was previously authorized under older provisions of part 20. This material will require appropriate evaluation as part of site license termination.

Environmental Analysis

An EIS is not needed at this step of the process of prescribing the LTR because the Commission is not establishing a new requirement for the site. This site is licensed to NYSERDA and, therefore, is already subject to the LTR by operation of the Commission's regulations. DOE in essence is acting as a surrogate for NYSERDA . The environmental impacts of applying the LTR to NRC licensees were evaluated in the Generic Environmental Impact Statement (GEIS), NUREG–1496, that supported the LTR. In promulgating the LTR, the Commission stated, in Section VI of the ''Statement for Considerations'' that it will conduct an environmental review to ''determine if the generic analysis encompasses the range of environmental impacts at the particular site.'' The Commission further stated that it ''will conduct an independent environmental review for each site-specific decommissioning decision where land use restrictions or institutional controls are relied upon by the licensee or where alternative criteria are proposed'' as it recognized that the environmental impacts for these cases cannot be analyzed on a generic basis. The environmental impacts from the application of the criteria will need to be evaluated for the various alternative approaches being considered in the process before NRC decides whether to accept the preferred alternative for meeting the criteria permitted by the LTR. NRC intends to rely on the DOE/NYSERDA EIS for this purpose.

For NEPA purposes, DOE is considered the lead Federal agency. NRC, in view of its responsibilities under the WVDP Act, is considered a cooperating agency for this EIS and is participating in the development of the DOE/NYSERDA EIS. NRC does not anticipate the need to prepare its own duplicative EIS, since it can consider the environmental impacts described in the DOE/NYSERDA EIS in approving the particular decommissioning criteria for the WVDP under the LTR. Under this arrangement, if NRC is satisfied with the DOE/NYSERDA EIS, this EIS will fulfill the NEPA responsibilities for NRC under the WVDP Act. If NRC is not satisfied with the final DOE/NYSERDA EIS, then NRC will adopt as much of it as possible and modify or supplement it as necessary. In such a situation, NRC would publish its own draft EIS document for public review and comment before finalizing it. Once finalized, NRC's West Valley NEPA responsibilities would be fulfilled under the WVDP Act.

The WVDP Act does not address license termination for the site. License termination of the NRC license for the site, or portions thereof, is conducted (if license termination is possible) under the AEA. If NYSERDA pursues either full or partial license termination of the NRC license, at that time NRC will need to conduct an environmental review to determine if an EIS is necessary to support license termination.

Availability of Documents

NRC's final policy statement on decommissioning criteria for West Valley is also available at NRC's Public Electronic Reading Room link (*http://www.nrc.gov/NRC/ADAMS/ index.html*) on NRC's home page (*http://www.nrc.gov*). Copies of documents cited in this section are available for inspection and/or reproduction for a fee in the NRC Public Document Room, 11555 Rockville Pike, Room O–1F21, Rockville, MD 20852. The NRC Public Document Room is open from 7:45 a.m. to 4:15 p.m., Monday through Friday, except on Federal holidays. Reference service and access to documents may also be requested by telephone (301–415–4737 or 800–397–4209), between 8:30 a.m. and 4:15 p.m.; or by e-mail (*PDR@nrc.gov*); fax (301–415–3548); or a letter (NRC Public Document Room, Mailstop O–1F13, Washington, DC 20555–0001). In addition, copies of: (1) SECY–98–251, ''Decommissioning Criteria for West Valley;'' (2) the transcript of the public meeting held January 12, 1999; (3) the Commission's SRM of January 26, 1999, concerning the January 12, 1999, public meeting on SECY–98–251; (4) SECY–99–057, ''Supplement to SECY–98–251, 'Decommissioning Criteria for West Valley;' '' (5) the Commission's vote sheets on SECY–98–251 and SECY–99–057; (6) the Commission's SRM of June 3, 1999, on SECY–98–251 and SECY–99–057; (7) the draft policy statement issued December 3, 1999; (8) the transcript of the public meeting held January 5, 2000; and (9) the public comments on the draft policy statement can be obtained electronically on NRC's home page at the Commission's Activities link (*http://www.nrc.gov/NRC/COMMISSION/activities.html*).

Dated at Rockville, Maryland, this 25th day of January, 2002.

For the Nuclear Regulatory Commission.

Annette Vietti-Cook,

Secretary of the Commission.

[FR Doc. 02–2373 Filed 1–31–02; 8:45 am]

BILLING CODE 7590–01–P

NUCLEAR REGULATORY COMMISSION

[Docket Nos. 50–250 and 50–251]

Florida Power and Light Company Turkey Point Plant, Units 3 and 4 Notice of Availability of the Final Supplement 5 to the Generic Environmental Impact Statement Regarding License Renewal for the Turkey Point Plant, Units 3 and 4

Notice is hereby given that the U. S. Nuclear Regulatory Commission (NRC) has published a final plant-specific Supplement 5 to the Generic Environmental Impact Statement (GEIS), NUREG–1437, regarding the renewal of operating licenses DPR–31 and DPR–41 for the Turkey Point Plant, Units 3 and 4, for an additional 20 years of operation. The Turkey Point Plant units are operated by Florida Power and Light Company (FPL). Turkey Point Plant is located in Dade County, Florida. Possible alternatives to the proposed action (license renewal) include no action and reasonable alternative methods of power generation.

In Section 9.3 of the report:

The staff recommends that the Commission determine that the adverse environmental impacts of license renewal for Turkey Point Units 3 and 4 are not so great that preserving the option of license renewal for energy planning decisionmakers would be unreasonable. This recommendation is based on (1) the analysis and findings in the Generic Environmental Impact Statement for License Renewal of Nuclear Power Plants, NUREG–1437; (2) the ER [Environmental Report] submitted by FPL; (3) consultation with other Federal, State, and local agencies; (4) the staff's own independent review; and

(5) the staff's consideration of public comments.

The final Supplement 5 to the GEIS is available electronically for public inspection in the NRC Public Document Room located at One White Flint North, 11555 Rockville Pike (first floor), Rockville, Maryland, or from the Publicly Available Records (PARS) component of NRC's document management system (ADAMS). ADAMS is accessible from the NRC Web site at *http://www.nrc.gov/* (the Public Electronic Reading Room).

FOR FURTHER INFORMATION CONTACT: Dr. Michael T. Masnik, License Renewal and Environmental Impacts Program, Division of Regulatory Improvement Programs, U.S. Nuclear Regulatory Commission, Washington, DC 20555. Dr. Masnik may be contacted at (301) 415–1191 or by writing to: Michael T. Masnik, U. S. Nuclear Regulatory Commission, MS O–12D2, Washington, DC 20555.

Dated at Rockville, Maryland, this *11th* day of January 2002.

For the Nuclear Regulatory Commission.

David B. Matthews,

Director, Division of Regulatory Improvement Programs, Office of Nuclear Reactor Regulation.

[FR Doc. 02–2497 Filed 1–31–02; 8:45 am]

BILLING CODE 7590–01–P

NUCLEAR REGULATORY COMMISSION

Advisory Committee on the Medical Uses of Isotopes: Meeting Notice

AGENCY: U.S. Nuclear Regulatory Commission.

ACTION: Notice of meeting.

SUMMARY: The U.S. Nuclear Regulatory Commission will convene a meeting of the Advisory Committee on the Medical Uses of Isotopes (ACMUI) on February 19–20, 2002. The meeting will take place at the address provided below. The topics of discussion will relate to the status of the revised 10 CFR part 35, Medical Use of Byproduct Material.

DATES: ACMUI will hold a public meeting on Tuesday, February 19, 2002, from 11 a.m. to 12:30 p.m. From 2 p.m. to 4 p.m. on February 19, the ACMUI will meet with the Commission in the Commissioners' conference room. On Wednesday, February 20, 2002, the ACMUI will continue its public meeting from 8 a.m. to 5 p.m.

Address for Commission Briefing: U.S. Nuclear Regulatory Commission, One White Flint North Building, Commissioners' Conference Room 1G16, 11555 Rockville Pike, Rockville, MD, 20852–2738.

Address for Public Meeting: U.S. Nuclear Regulatory Commission, Two White Flint North Building, Conference Room T2B3, 11545 Rockville Pike, Rockville, MD 20852–2738.

FOR FURTHER INFORMATION CONTACT: Angela R. Williamson, telephone (301) 415–5030; e-mail *arw@nrc.gov* of the Office of Nuclear Material Safety and Safeguards, U.S. Nuclear Regulatory Commission, Washington, DC 20555–0001.

Conduct of the Meeting

Manuel D. Cerqueira, M.D., will chair the meeting. Dr. Cerqueira will conduct the meeting in a manner that will facilitate the orderly conduct of business. The following procedures apply to public participation in the meeting:

1. Persons who wish to provide a written statement should submit a reproducible copy to Angela Williamson, U.S. Nuclear Regulatory Commission, Two White Flint North, Mail Stop T8F5, 11545 Rockville Pike, Rockville, MD 20852–2738. Submittals must be postmarked by February 11, 2002, and must pertain to the topics on the agenda for the meeting.

2. Questions from members of the public will be permitted during the meeting, at the discretion of the Chairman.

3. The transcript and written comments will be available for inspection on NRC's Web site, *www.nrc.gov,* and at the NRC Public Document Room, 11555 Rockville Pike, Rockville, MD 20852–2738, telephone (800) 397–4209, on or about April 22, 2002. Minutes of the meeting will be available on or about April 15, 2002.

This meeting will be held in accordance with the Atomic Energy Act of 1954, as amended (primarily Section 161a); the Federal Advisory Committee Act (5 U.S.C. App); and the Commission's regulations in Title 10, *U.S. Code of Federal Regulations,* Part 7.

Dated: January 28, 2002.

Andrew L. Bates,

Advisory Committee Management Officer.

[FR Doc. 02–2501 Filed 1–31–02; 8:45 am]

BILLING CODE 7590–01–P

SECURITIES AND EXCHANGE COMMISSION

[Release No. IC–25402; 812–12200]

Memorial Funds and Memorial Investment Advisors, Inc.; Notice of Application

January 25, 2002.

AGENCY: Securities and Exchange Commission (''Commission'').

ACTION: Notice of an application for an order under section 6(c) of the Investment Company Act of 1940 (''Act'') for an exemption from section 15(a) of the Act and rule 18f–2 under the Act, as well as from certain disclosure requirements.

SUMMARY OF APPLICATION: Memorial Funds (the ''Trust'') and Memorial Investment Advisors, Inc. (the ''Adviser'') (together, ''Applicants'') request an order that would permit applicants to enter into and materially amend subadvisory agreements without shareholder approval and grant relief from certain disclosure requirements.

FILING DATES: The application was filed on July 24, 2000, and amended on January 22, 2002.

HEARING OR NOTIFICATION OF HEARING: An order granting the requested relief will be issued unless the Commission orders a hearing. Interested persons may request a hearing by writing to the Commission's Secretary and serving applicants with a copy of the request, personally or by mail. Hearing requests should be received by the Commission by 5:30 p.m. on February 19, 2002, and should be accompanied by proof of service on the applicants, in the form of an affidavit, or, for lawyers, a certificate of service. Hearing requests should state the nature of the writer's interest, the reason for the request, and the issues contested. Persons who wish to be notified of a hearing may request notification by writing to the Commission's Secretary.

ADDRESSES: Secretary, Commission, 450 Fifth Street, NW., Washington, DC 20549–0609; Applicants, c/o Anthony C.J. Nuland, Esq., Seward & Kissel, LLP, 1200 G Street NW., Washington, DC 20005.

FOR FURTHER INFORMATION CONTACT: Lidian Pereira, Senior Counsel, at (202) 942–0524, or Mary Kay Frech, Branch Chief, at (202) 942–0564, Division of Investment Management, Office of Investment Company Regulation.

SUPPLEMENTARY INFORMATION: The following is a summary of the application. The complete application may be obtained for a fee at the

Commission's Public Reference Branch, 450 Fifth Street, NW., Washington, DC 20549–0102, telephone 202–942–8090.

Applicants' Representations

1. The Trust, a Delaware business trust, is registered under the Act as an open-end management investment company. The Trust currently is composed of four series (each a ''Fund,'' collectively, the ''Funds'').[1] Each Fund has its own investment objectives, policies and restrictions.

2. The Adviser, registered under the Investment Advisers Act of 1940 (''Advisers Act''), serves as investment adviser to the Funds pursuant to an investment advisory agreement with the Trust (''Advisory Agreement''), which was approved by the board of trustees of the Trust (''Board''), including a majority of the trustees who are not ''interested persons,'' as defined in section 2(a)(19) of the Act (''Independent Trustees''), and by each Fund's shareholders. Under the terms of the Advisory Agreement, the Adviser provides investment advisory services for each Fund and may hire one or more subadvisers (''Subadvisers'') to exercise day-to-day investment discretion over the assets of the Fund pursuant to separate investment advisory agreements (''Subadvisory Agreements''). All current and future Subadvisers will be registered under the Advisers Act. Subadvisers are recommended to the Board by the Adviser and selected and approved by the Board, including a majority of the Independent Trustees. The Adviser compensates each Subadviser out of the fees paid to the Adviser by the applicable Fund.

3. The Adviser monitors the Funds and the Subadvisers and makes recommendations to the Board regarding allocation, and reallocation, of assets between Subadvisers and is responsible for recommending the hiring, termination and replacement of Subadvisers. The Adviser recommends Subadvisers based on a number of factors used to evaluate their skills in managing assets pursuant to particular investment objectives.

4. Applicants request relief to permit the Adviser, subject to the oversight of the Board, to enter into and materially amend Subadvisory Agreements without shareholder approval. The requested relief will not extend to a Subadviser that is an affiliated person, as defined in section 2(a)(3) of the Act, of the Trust or the Adviser, other than by reason of serving as a Subadviser to one or more of the Funds (an ''Affiliated Subadviser'').

5. Applicants also request an exemption from the various disclosure provisions described below that may require each Fund to disclose fees paid by the Adviser to the Subadvisers. The Trust will disclose for each Fund (both as a dollar amount and as a percentage of a Fund's net assets) (a) aggregate fees paid to the Adviser and Affiliated Subadvisers; and (b) aggregate fees paid to Subadvisers other than Affiliated Subadvisers (''Aggregate Fee Disclosure''). For any Fund that employs an Affiliated Subadviser, the Fund will provide separate disclosure of any subadvisory fees paid to the Affiliated Subadviser.

Applicants' Legal Analysis

1. Section 15(a) of the Act provides, in relevant part, that it is unlawful for any person to act as an investment adviser to a registered investment company except under a written contract that has been approved by a majority of the investment company's outstanding voting securities. Rule 18f–2 under the Act provides that each series or class of stock in a series company affected by a matter must approve the matter if the Act requires shareholder approval.

2. Form N–1A is the registration statement used by open-end investment companies. Item 15(a)(3) of Form N–1A requires disclosure of the method and amount of the investment adviser's compensation.

3. Rule 20a–1 under the Act requires proxies solicited with respect to an investment company to comply with Schedule 14A under the Securities Exchange Act of 1934 (''Exchange Act''). Items 22(c)(1)(ii), 22(c)(1)(iii), 22(c)(8) and 22(c)(9) of Schedule 14A, taken together, require a proxy statement for a shareholder meeting at which the advisory contract will be voted upon to include the ''rate of compensation of the investment adviser,'' the ''aggregate amount of the investment adviser's fees,'' a description of ''the terms of the contract to be acted upon,'' and, if a change in the advisory fee is proposed, the existing and proposed fees and the difference between the two fees.

4. Form N–SAR is the semi-annual report filed with the Commission by registered investment companies. Item 48 of Form N–SAR requires investment companies to disclose the rate schedule for fees paid to their investment advisers, including the Subadvisers.

5. Regulation S–X sets forth the requirements for financial statements required to be included as part of investment company registration statements and shareholder reports filed with the Commission. Sections 6–07(2)(a), (b), and (c) of Regulation S–X require that investment companies include in their financial statements information about investment advisory fees.

6. Section 6(c) of the Act provides that the Commission may exempt any person, security, or transaction or any class or classes of persons, securities, or transactions from any provision of the Act, or from any rule thereunder, if such exemption is necessary or appropriate in the public interest and consistent with the protection of investors and the purposes fairly intended by the policy and provisions of the Act. Applicants believe that their requested relief meets this standard for the reasons discussed below.

7. Applicants assert that by investing in a Fund, shareholders, in effect, will hire the Adviser to manage the Fund's assets by selecting and monitoring Subadvisers rather than by hiring its own employees to manage assets directly. Applicants state that investors will purchase Fund shares to gain access to the Adviser's expertise in overseeing Subadvisers. Applicants further assert that the requested relief will reduce Fund expenses and permit the Funds to operate more efficiently. Applicants note that the Advisory Agreement will remain subject to the shareholder approval requirements of section 15(a) of the Act and rule 18f–2 under the Act.

8. Applicants assert that some Subadvisers charge their customers for advisory services according to a ''posted'' rate schedule. Applicants state that while Subadvisers are willing to negotiate fees lower than those posted in the schedule, particularly with large institutional clients, they are reluctant to do so where the fees are disclosed to other prospective and existing customers. Applicants submit that the relief will encourage Subadvisers to negotiate lower advisory fees with the Adviser, the benefits of which are likely to be passed on to shareholders.

[1] Applicants request that any relief granted pursuant to the application also apply to future series of the Trust, and any other registered open-end management investment company and its series that: (a) Are advised by the Adviser or any entity controlling, controlled by, or under common control with the Adviser; (b) use the multi-manager structure described in the application; and (c) comply with the terms and conditions in the application (''Future Funds,'' included in the term ''Funds''). All entities that currently intend to rely on the requested relief are named as applicants. If the name of any Fund contains the name of a Subadviser, it will be preceded by the name of the Adviser.

Applicants' Conditions

Applicants agree that any order granting the requested relief will be subject to the following conditions:

1. Before a Fund may rely on the requested order, the operation of the Fund in the manner described in the application will be approved by a majority of the outstanding voting securities of the Fund, as defined in the Act, or in the case of a Fund whose public shareholders purchased shares on the basis of a prospectus containing the disclosure contemplated by condition 2 below, by the initial shareholders prior to offering shares of the Fund to the public.

2. Any Fund relying on the requested relief will disclose in its prospectus the existence, substance, and effect of any order granted pursuant to the application. In addition, each Fund relying on the requested order will hold itself out to the public as employing the management structure described in the application. The prospectus will prominently disclose that the Adviser has the ultimate responsibility (subject to oversight by the Board) to oversee the Subadvisers and recommend their hiring, termination, and replacement.

3. Within 90 days of the hiring of any new Subadviser, shareholders of the relevant Fund will be furnished all information about the Subadviser that would be contained in a proxy statement, except as modified by the order to permit Aggregate Fee Disclosure. This information will include Aggregate Fee Disclosure and any change in such disclosure caused by the addition of a new Subadviser. The Adviser will meet this condition by providing shareholders, within 90 days of the hiring of a Subadviser, an information statement meeting the requirements of Regulation 14C, Schedule 14C and Item 22 of Schedule 14A under the Exchange Act, except as modified by the order to permit Aggregate Fee Disclosure.

4. The Adviser will not enter into a Subadvisory Agreement with any Affiliated Subadviser without such agreement, including the compensation to be paid thereunder, being approved by the shareholders of the applicable Fund.

5. At all times, a majority of the Trust's Board will be Independent Trustees, and the nomination of new or additional Independent Trustees will be at the discretion of the then existing Independent Trustees.

6. When a Subadviser change is proposed for a Fund with an Affiliated Subadviser, the Trust's Board, including a majority of the Independent Trustees, will make a separate finding, reflected in the Trust's Board minutes, that the change is in the best interests of the Fund and its shareholders and does not involve a conflict of interest from which the Adviser or the Affiliated Subadviser derives an inappropriate advantage.

7. Independent counsel knowledgeable about the Act and the duties of Independent Trustees will be engaged to represent the Trust's Independent Trustees. The selection of such counsel will be within the discretion of the Independent Trustees.

8. The Adviser will provide the Trust's Board, no less frequently than quarterly, with information about the Adviser's profitability for each Fund relying on the relief requested in the application. The information will reflect the impact on profitability of the hiring or termination of Subadvisers during the applicable quarter.

9. Whenever a Subadviser to a particular Fund is hired or terminated, the Adviser will provide the Trust's Board with information showing the expected impact on the Adviser's profitability.

10. The Adviser will provide general management services to the Trust and the Funds, including overall supervisory responsibility for the general management and investment of each Fund's securities portfolio, and, subject to review and approval by the Board, will (a) set each Fund's overall investment strategies, (b) evaluate, select and recommend Subadvisers to manage all or a part of a Fund's assets, (c) allocate and, when appropriate, reallocate a Fund's assets among multiple Subadvisers, (d) monitor and evaluate the performance of Subadvisers, and (e) implement procedures reasonably designed to ensure that the Subadvisers comply with the relevant Fund's investment objective, policies and restrictions.

11. No trustee or officer of the Trust or director or officer of the Adviser will own directly or indirectly (other than through a pooled investment vehicle that is not controlled by any such person) any interest in a Subadviser, except for: (a) Ownership of interests in the Adviser or any entity that controls, is controlled by, or is under common control with the Adviser; or (b) ownership of less than 1% of the outstanding securities of any class of equity or debt of a publicly traded company that is either a Subadviser or an entity that controls, is controlled by or is under common control with a Subadviser.

12. Each Fund will disclose in its registration statement the respective Aggregate Fee Disclosure.

For the Commission, by the Division of Investment Management, under delegated authority.

Margaret H. McFarland,

Deputy Secretary.

[FR Doc. 02–2458 Filed 1–31–02; 8:45 am]

BILLING CODE 8010–01–U

SECURITIES AND EXCHANGE COMMISSION

[Release No. 34–45333: File No. SR–AMEX–2001–56]

Self-Regulatory Organizations; Notice of Filing of Proposed Rule Change and Amendment No. 1 Thereto by the American Stock Exchange LLC Relating to the Recording of Images, Sound or Data on the Trading Floor

January 25, 2002.

Pursuant to section 19(b)(1) of the Securities Exchange Act of 1934 (''Act''),[1] and rule 19b–4 thereunder,[2] notice is hereby given that on August 1, 2001, the American Stock Exchange LLC (''Amex'' or ''Exchange'') filed with the Securities and Exchange Commission (''Commission'') the proposed rule change as described in Items I, II, and III below, which Items have been prepared by the Exchange. The Amex filed an amendment to its proposal on January 15, 2002.[3] The Commission is publishing this notice to solicit comments on the proposed rule change from interested persons.

1. Self-Regulatory Organization's Statement of the Terms of Substance of the Proposed Rule Change

The Exchange proposes to amend Article II, Section 3 of the Amex Constitution, to control the recording of images, sound or data on the Trading Floor. The text of the proposed rule change is available at the principal offices of the Amex and at the Commission.

II. Self-Regulatory Organization's Statement of the Purpose of, and Statutory Basis for, the Proposed Rule Change

In its filing with the Commission, the Exchange included statements concerning the purpose of and basis for the proposed rule change and discussed

[1] 15 U.S.C. 78s(b)(1).

[2] 17 CFR 240.19b–4.

[3] *See* letter from Geraldine Brindisi, Vice President and Corporate Secretary, Amex, to Nancy Sanow, Assistant Director, Division of Market Regulation, Commission (January 14, 2002) (''Amendment No. 1''). In Amendment No. 1, the Amex limited its proposed rule language to recording of images, sound or data ''on the Trading Floor'' (rather than ''on the premises of the Exchange.'')

any comments it received on the proposed rule change. The test of these statements may be examined at the places specified in Item IV below. The Exchange has prepared summaries, set forth in Sections A, B, and C below, of the most significant aspects of such statements.

A. Self-Regulatory Organization's Statement of the Purpose of, and Statutory Basis for, the Proposed Rule Change

1. Purpose

Images and sounds from the Trading Floor are a powerful symbol of the Amex and a valuable asset. The recording of images, sound or data on the Trading Floor also may disrupt the conduct of business. Thus, for example, when recording is allowed on the Trading Floor (as in the Media Booth), the Exchange takes precautions to ensure that trading is not disturbed.

To protect the Amex, the Exchange is proposing that any person that wishes to record images, sound or data on the Trading Floor must first receive written permission from the Exchange to do so. Such permission may be granted on such terms and conditions as the Exchange deems appropriate. The Exchange believes that the proposed rule change is desirable to protect both the Exchange's rights and its interests in ensuring the orderly conduct of business.

2. Statutory Basis

The Exchange believes that the proposed rule change is consistent with section 6(b) of the Act,[4] in general, and section 6(b)(5) of the Act,[5] in particular, which requires, among other things, that the rules of an exchange be designed to prevent fraudulent and manipulative acts and practices, to promote just and equitable principles of trade, to remove impediments to and perfect the mechanism of a free and open market and a national market system, and, in general, to protect investors and the public interest; and are not designed to permit unfair discrimination between customers, issuers, brokers, or dealers.

B. Self-Regulatory Organization's Statement on Burden on Competition

The Exchange does not believe that the proposed rule change will impose any burden on competition that is not necessary or appropriate in furtherance of the purpose of the Act.

[4] 15 U.S.C. 78f(b).

[5] 15 U.S.C. 78f(b)(5).

C. Self-Regulatory Organization's Statement on Comments on the Proposed Rule Change Received From Members, Participants or Others

The Exchange has neither solicited nor received written comments on the proposed rule change.

III. Date of Effectiveness of the Proposed Rule Change and Timing for Commission Action

Within 35 days of the date of publication of this notice in the **Federal Register** or within such longer period (i) as the Commission may designate up to 90 days of such date if it finds such longer period to be appropriate and publishes its reasons for so finding or (ii) as to which the Exchange consents, the Commission will:

(A) By order approve such proposed rule change, or

(B) Institute proceedings to determine whether the proposed rule change should be disapproved.

IV. Solicitation of Comments

Interested persons are invited to submit written data, views, and arguments concerning the foregoing, including whether the proposed rule change is consistent with the Act. Persons making written submissions should file six copies thereof with the Secretary, Securities and Exchange Commission, 450 Fifth Street, NW., Washington, DC 20549–0609. Copies of the submission, all subsequent amendments, all written statements with respect to the proposed rule change that are filed with the Commission, and all written communications relating to the proposed rule change between the Commission and any person, other than those that may be withheld from the public in accordance with the provisions of 5 U.S.C. 552, will be available for inspection and copying in the Commission's Public Reference Room. Copies of such filing will also be available for inspection and copying at the principal office of the Exchange. All submissions should refer to File No. SR–AMEX–2001–56 and should be submitted by February 22, 2002.

For the Commission, by the Division of Market Regulation, pursuant to delegated authority.[6]

Margaret H. McFarland,

Deputy Secretary.

[FR Doc. 02–2459 Filed 1–31–02; 8:45 am]

BILLING CODE 8010–01–M

[6] 17 CFR 200.30–3(a)(12).

SECURITIES AND EXCHANGE COMMISSION

[Release No. 34–45341; File No. SR–CBOE–00–42]

Self-Regulatory Organizations; Order Approving Proposed Rule Change and Notice of Filing and Order Granting Accelerated Approval of Amendment No. 2 to the Proposed Rule Change by the Chicago Board Options Exchange, Inc. Eliminating the Obligation of Designated Primary Market Makers to Accord Priority to Non-Public Customer Orders

January 25, 2002.

I. Introduction

On August 29, 2000, the Chicago Board Options Exchange, Inc. (''CBOE'' or ''Exchange'') submitted to the Securities Exchange Commission (''SEC'' or ''Commission''), pursuant to Section 19(b)(1) of the Securities Exchange Act of 1934 (''Act'')[1] and Rule 19b–4 thereunder,[2] a proposed rule change to eliminate the obligation of Designated Primary Market Makers (''DPMs'') to accord priority to non-public customers over the DPMs' principal transactions. The proposed rule change was published for comment in the **Federal Register** on December 4, 2001.[3] The Commission received no comments on the proposal. On January 8, 2002, the CBOE submitted Amendment No. 1 to the proposed rule change.[4] On January 16, 2002, the CBOE submitted Amendment No. 2 to the proposed rule change.[5] This order approves the proposal, as amended by Amendment No. 2. The Commission also solicits comment on Amendment No. 2 from interested persons.

[1] 15 U.S.C. 78s(b)(1).

[2] 17 CFR 240.19b–4.

[3] *See* Securities Exchange Act Release No. 45013 (November 26, 2001), 66 FR 63083.

[4] *See* letter from Steve Youhn, Legal Department, CBOE to Kelly Riley, Senior Special Counsel, Division of Market Rgulation (''Division''), Commission, dated January 7, 2002 (''Amendment No. 1''. In Amendment No. 1, the CBOE proposed a definition of ''public customer orders.''

[5] *See* letter from Steve Youhn, Legal Department, CBOE to Kelly Riley, Seniro Special Counsel, Division, Commission, dated January 14, 2002 (''Amendment No. 2''). In Amendment NO. 2 CBOE proposed to define the term ''public customer'' in proposed Interpretation .03 of CBOE Rule 8.85. Amendment No. 2 supersedes and replaces Amendment No. 1 in its entirety. Telephone conversation between Steven Youhn, Legal Division, CBOE, and Kelly Riley, Senior Special Counsel, Division, Commission, on January 14, 2002. On January 18, 2002, CBOE consented to an extension of time for Commission action until January 25, 2002. *See* letter from Steve Youhn, Legal Department, CBOE, to Kelly Riley, Senior Special Counsel, Division, Commission, dated January 18, 2002.

II. Description of the Proposal

The CBOE proposes to amend CBOE Rule 8.85 (DPM Obligations) regarding the obligations of DPMs to represent orders. Currently, CBOE Rule 8.85(b)(iii) requires a DPM to accord priority to any order, that the DPM represents as agent over the DPM's principal transactions, unless the customer who placed the order has consented to not being accorded such priority. The CBOE proposes to amend CBOE Rule 8.85(b)(iii) to require DPMs to accord priority only to public customer orders. In Amendment No. 2 the CBOE proposes to add Interpretation .03 to CBOE Rule 8.85 to define a public customer order as not including any order in which a member, non-member participant in a joint venture with a member, or any non-member broker dealer has an interest. Accordingly, CBOE proposes to exclude these orders from a DPM's obligation under Exchange rules to accord priority.

III. Commission Findings and Order Granting Accelerated Approval of the Proposed Rule Change

After careful review, the Commission finds that the proposed rule change, as amended, is consistent with the requirements of the Act and the rules and regulations thereunder applicable to a national securities exchange.[6] The Commission's approval of CBOE's proposal to amend its Rule 8.85 to eliminate a DPM's obligation, *pursuant to CBOE rules,* to accord priority under all circumstances to certain orders is based solely on its determination that this proposed rule change is consistent with the Act and the rules and regulations thereunder applicable to a *national securities exchange.* The Commission is making no determination as to whether a DPM's failure to accord priority to non-public customer orders, when the DPM is acting as an agent, is consistent with the federal securities laws or any other applicable law. Accordingly, the Commission's approval of CBOE's proposal does not affect a DPM's fiduciary obligations under federal securities laws or agency law principles when it acts as an agent.[7]

Currently, by requiring DPMs to accord priority to all customer orders pursuant to its Rule 8.85, unless the customer who placed the order has consented to not being accorded such priority, the CBOE creates an obligation on DPMs under Exchange rules in addition to the DPM's obligations under Federal securities laws and agency law. Accordingly, the result of CBOE's proposal is to no longer make a DPM's failure to accord priority to non-public customer orders for which it acts as agent a CBOE rule violation. The CBOE's proposal, however, does not affect a DPM's obligations to orders for which it acts as agent under Federal securities laws or any other applicable laws.

The Commission found in its Manning Decision that broker-dealers owe a fiduciary duty to their limit order customers not to trade ahead of these orders unless the customer knows of the firm's limit order policy.[8] After the Commission issued its Manning Decision, the NASD filed a proposed rule change stating that a member firm would not be deemed to violate NASD Rules of Fair Practice if it provides to customers a statement setting forth the circumstances in which the firm accepts limit orders and the policies and procedures the firm follows in handling these orders.[9] As part of this filing, the NASD proposed model disclosure language to be used by firms whose policy was not to grant priority to customer limit orders over the member's own proprietary trading.

This proposal was never approved by the Commission and was withdrawn by the NASD at the time it submitted a proposed rule change to prohibit member firms from trading ahead of their customers' limit orders in their market making capacity.[10] In approving this subsequent NASD proposal, the Commission expressed concern that the prohibition did not extend to trading ahead of limit orders of other firms' customers that had been sent to the market maker for execution.[11] Shortly thereafter, the Commission proposed its own rule to prohibit any market maker in Nasdaq National Market securities from trading ahead of the orders of other firms' customers sent to it for execution.[12]

Shortly after the Commission's publication of its proposal, the NASD filed a proposed rule change to prohibit its member firms from trading ahead of the orders of other firms' customers, which the Commission approved.[13] In its approval order of Manning II, the Commission also noted that:

''In a typical agency relationship, disclosure often is relied upon as an adequate means of resolving a conflict of interest between an agent and its principal. *Cite omitted.* Investors enjoy greater protection under the federal securities laws, however, than that afforded by common law; a general common law remedy of disclosure does not always suffice.[14] A stricter duty may be imposed where, as here, the principles are investors and the agents control access to the trading market.''

While the NASD's limit order protections only extend to non-broker-dealer customers, the Commission questioned why the provisions of the rule should not be extended to limit orders placed by other broker-dealers, including options specialists and registered options traders. Further, the Commission specifically noted that it expected the NASD to consider extending the scope of limit order protections to orders of options specialists and market makers.[15]

More recently, the Commission approved a New York Stock Exchange (''NYSE'') proposal to prohibit NYSE members from trading along with their customers except in limited circumstances.[16] NYSE Rule 92 significantly restricts NYSE members'

[6] In approving this proposal, the Commission has considered the proposed rule's impact on efficiency, competition, and capital formation. 15 U.S.C. 78c(f).

[7] Pursuant to agency law principles, a DPM that acts as agent for any customer has an obligation to act solely for the benefit of the customer in all matters connected with the customer's order, *see* Restatement (Second) of Agency § 387 (1958), and not compete with the customer concerning the customer's order unless the customer understands its agent is to compete, *see* Restatement (Second) of Agency § 393 (1958). *See also In re E.F. Hutton & Company,* Securities Exchange Act Release No. 25887 (July 6, 1988) (''Manning Decision''). In its opinion, the Commission noted that ''absent disclosure and a contrary agreement a fiduciary cannot compete with his beneficiary with respect to the subject matter of their relationship * * *''.

[8] *See supra* note 7.

[9] *See* Securities Exchange Act Release No. 26824 (May 15, 1989), 54 FR 22046 (May 22, 1989).

[10] *See* Securities Exchange Act Release No. 33697 (March 1, 1994), 59 FR 45 (March 8, 1994) (''Manning I'').

[11] *See* Securities Exchange Act Release No. 34279 (June 29, 1994), 59 FR 34883 (July 7, 1994). *See also* Division of Market Regulation, SEC, Market 2000: An Examination of Current Equity Market Developments, V–8 (1994).

[12] *See* Securities Exchange Act Release No. 34753 (September 29, 1994), 59 FR 50867 (October 6, 1994). The Commission's proposal was never adopted.

[13] *See* Securities Exchange Act Release No. 35751 (May 22, 1995), 60 FR 27997 (May 26, 1995) (''Manning II'').

[14] *See e.g., Herman & MacLean v. Huddleston,* 459 U.S. 375, 389 (1983) (''An important purpose of the federal securities statutes was to rectify perceived deficiencies in the available common law protection by establishing higher standards of conduct in the securities industry.'').

[15] *See* Manning II, *supra* note 12.

[16] *See* Securities Exchange Act Release No. 44139 (March 30, 2001), 66 FR 18339 (April 6, 2001). Specifically, members are only permitted to enter certain types of proprietary orders, such as liquidating positions in proprietary facilitation accounts, bona fide hedges, bona fide arbitrages and risk arbitrages, while representing a customer's order that could be executed at the same price, so long as the order is not for an individual investor and the customer has given express permission, which must include an understanding of the relative price and size of the allocated execution reports.

ability to enter orders to buy or sell NYSE-listed securities for any account in which such member is interested, if the person responsible for the entry of such order has knowledge of any particular unexecuted customer order to buy or sell the same security that could be executed at the same price. In its approval order, the Commission noted that proprietary trading exceptions ''did not minimize the importance of a broker-dealers' duty to their customers, which requires broker-dealers to place investors' interests before their own. On the contrary,'' the Commission continued, ''member and member organizations remain obligated to consider their customers' interest in every customer transaction.'' [17]

Amendment No. 2

The Commission finds good cause, consistent with Section 19(b)(2) of the Act,[18] to approve Amendment No. 2 to the proposed rule change prior to the thirtieth day after the date of publication of notice of filing thereof in the **Federal Register**. The Commission notes that the notice that was published in the **Federal Register** [19] discussed CBOE's intent to define ''public customer orders.'' Therefore, the CBOE's proposed definition was subject to notice and comment. Accordingly, the Commission believes good cause exists, pursuant to Sections 6(b)(5) and 19(b) of the Act [20] to accelerate approval of Amendment No. 2 to the proposed rule change.

IV. Solicitation of Comments

Interested persons are invited to submit written data, views and arguments concerning Amendment No. 2, including whether it is consistent with the Act. Persons making written submissions should file six copies thereof with the Secretary, Securities and Exchange Commission, 450 Fifth Street, NW, Washington, DC 20549–0609. Copies of the submission, all subsequent amendments, all written statements with respect to the proposed rule change that are filed with the Commission, and all written communications relating to the proposed rule change between the Commission and any person, other than those that may be withheld from the public in accordance with the provisions of 5 U.S.C. 552, will be available for inspection and copying in the Commission's Public Reference Room. Copies of such filing will also be available for inspection and copying at the principal office of the CBOE. All submissions should refer to File No. SR–CBOE–00–42 and should be submitted by February 22, 2002.

V. Conclusion

It is therefore ordered, pursuant to Section 19(b)(2) of the Act,[21] that the proposed rule change (SR–CBOE–00–42) is approved.

For the Commission, by the Division of Market Regulation, pursuant to delegated authority.[22]

Margaret H. McFarland,

Deputy Secretary.

[FR Doc. 02–2489 Filed 1–31–02; 8:45 am]

BILLING CODE 8010–01–P

[17] *See supra* note 16.

[18] 15 U.S.C. 78s(b)(2).

[19] *See supra* note 3.

[20] 15 U.S.C. 78f(b)(5) and 15 U.S.C. 78s(b).

[21] 15 U.S.C. 78s(b)(2).

[22] 17 CFR 200.30–3(a)(12).

SECURITIES AND EXCHANGE COMMISSION

[Release No. 34–45337; File No. SR–ISE–2002–02]

Self-Regulatory Organizations; Notice of Filing and Immediate Effectiveness of Proposed Rule Change by the International Securities Exchange LLC, Relating to an Extension of the Interim Intermarket Linkage Program

January 25, 2002.

Pursuant to section 19(b)(1) of the Securities Exchange Act of 1934 (''Act''),[1] and Rule 19b–4 thereunder,[2] notice is hereby given that on January 16, 2002, the International Securities Exchange LLC (''Exchange'' or ''ISE'') filed with the Securities and Exchange Commission (''Commission'') the proposed rule change as described in Items I, II, and III below, which items have been prepared by the ISE. The Exchange filed this proposal under section 19(b)(3)(A) of the Act,[3] and Rule 19b–4(f)(6) thereunder,[4] which renders the proposal effective upon filing with the Commission. The Commission is publishing this notice to solicit comments on the proposed rule change from interested persons.

I. Self-Regulatory Organization's Statement of the Terms of Substance of the Proposed Rule Change

The ISE is proposing to extend the effective date of its rules providing for an ''interim linkage'' from January 31, 2001 to the earlier of: January 31, 2003; or the complete implementation of the permanent intermarket linkage in the options market.[5]

II. Self-Regulatory Organization's Statement of the Purpose of, and Statutory Basis for, the Proposed Rule Change

In its filing with the Commission, the ISE included statements concerning the purpose of, and basis for, the proposed rule change and discussed any comments it received on the proposed rule change. The text of these statements may be examined at the places specified in Item IV below. The ISE has prepared summaries, set forth in Sections A, B, and C below, of the most significant aspects of such statements.

A. Self-Regulatory Organization's Statement of the Purpose of, and Statutory Basis for, the Proposed Rule Change

1. Purpose

On January 30, 2001, the Commission approved rules of the ISE permitting the ISE to implement an ''interim linkage'' with the other options exchanges.[6] The interim linkage utilizes existing order types to permit market makers on each of the exchanges to send orders to their counterparts on the other exchanges. Interim linkage orders are treated as ''customer'' orders upon receipt on an exchange and, thus, are eligible for automatic execution and similar processing efficiencies.

The options exchanges implemented the interim linkage pending completion of a permanent linkage. That linkage will provide enhanced connectivity between the markets and will have additional rules and mechanisms to help investors achieve best execution of their orders. While work continues on the permanent linkage, the ISE currently does not believe that it will be implemented until late this year. At the same time, the ISE's interim linkage rules will expire on January 31, 2002. ISE believes that the interim linkage has worked well and that it will benefit investors to continue operation of this linkage pending completion of the permanent linkage. The purpose of the proposed rule change is to extend the effectiveness of these rules until the full implementation of the permanent linkage or January 31, 2003, whichever comes first.

[1] 15 U.S.C. 78s(b)(1).

[2] 17 CFR 240.19b–4.

[3] 15 U.S.C. 78s(b)(3)(A).

[4] CFR 240.19b–4(f)(6). The ISE requested that the Commission waive the 30-day operative delay. The ISE provided the Commission with notice of its intention to file this proposal on January 14, 2002.

[5] The Commission approved the Plan for the Purpose of Creating and Operating an Intermarket Options Linkage (''Linkage Plan'') in July 2000. *See* Securities Exchange Act Release No. 43086 (July 28, 2000), 65 FR 48023 (August 4, 2000).

[6] Securities Exchange Act Release No. 43904 (January 30, 2001), 66 FR 9112 (February 6, 2001) (File No. SR–ISE–00–15).

2. Statutory Basis

The Exchange believes that the proposed rule change is consistent with section 6(b) of the Act,[7] in general, and furthers the objectives of section 6(b)(5),[8] in particular, because it should prevent fraudulent and manipulative acts and practices, promote just and equitable principles of trade, foster cooperation and coordination with persons engaged in regulating, clearing, settling, processing information with respect to, and facilitating transaction in securities, remove impediments to and perfect the mechanism for a free and open market and a national market system, and, in general, protect investors and the public interest.

B. Self-Regulatory Organization's Statement on Burden on Competition

The Exchange does not believe that the proposed rule change will impose any burden on competition that is not necessary or appropriate in furtherance of the purposes of the Act.

C. Self-Regulatory Organization's Statement on Comments on the Proposed Rule Change Received From Members, Participants or Others

The Exchange has not solicited, and does not intend to solicit, comments on this proposed rule change. The Exchange has not received any unsolicited written comments from members or other interested parties.

III. Date of Effectiveness of the Proposed Rule Change and Timing for Commission Action

Because the foregoing proposed rule change: (1) Does not significantly affect the protection of investors or the public interest; (2) does not impose any significant burden on competition; (3) does not become operative for 30 days from the date of filing, or such shorter date as the Commission may designate, if consistent with the protection of investors and the public interest; and (4) the Exchange provided the Commission with notice of its intent to file the proposed rule change at least five days prior to the filing date, the proposed rule change has become effective pursuant to section 19(b)(3)(A) of the Act[9] and Rule 19b–4(f)(6)[10] thereunder.

A proposed rule change filed under Rule 19b–4(f)(6)[11] does not become operative prior to 30 days after the date of filing or such shorter time as the Commission may designate if such action is consistent with the protection of investors and the public interest. The ISE has requested, in order to permit the uninterrupted operation of the interim linkage, that the Commission accelerate the implementation of the proposed rule change so that it may take effect prior to the 30 days specified in Rule 19b–4(f)(6)(iii).[12] The Commission finds that the proposed rule change is consistent with the protection of investors and the public interest and, therefore, has determined to make the proposed rule change operative as of the date of this notice.

At any time within 60 days of the filing of the proposed rule change, the Commission may summarily abrogate such rule change if it appears to the Commission that such action is necessary or appropriate in the public interest, for the protection of investors, or otherwise in furtherance of the purposes of the Act.

IV. Solicitation of Comments

Interested persons are invited to submit written data, views and arguments concerning the foregoing, including whether the proposed rule change is consistent with the Act. Persons making written submissions should file six copies thereof with the Secretary, Securities and Exchange Commission, 450 Fifth Street, NW, Washington, DC 20549–0069. Copies of the submission, all subsequent amendments, all written statements with respect to the proposed rule change that are filed with the Commission, and all written communications relating to the proposed rule change between the Commission and any person, other than those that may be withheld from the public in accordance with the provisions of 5 U.S.C. 552, will be available for inspection and copying in the Commission's Public Room. Copies of such filing will also be available for inspection and copying at the principal office of the ISE. All submissions should refer to File Number SR–ISE–2002–02 and should be submitted by February 22, 2002.

For the Commission, by the Division of Market Regulation, pursuant to delegated authority.[13]

Margaret H. McFarland,

Deputy Secretary.

[FR Doc. 02–2488 Filed 1–31–02; 8:45 am]

BILLING CODE 8010–01–U

[7] 15 U.S.C. 78f(b).

[8] 15 U.S.C. 78f(b)(5).

[9] 15 U.S.C. 78s(b)(3)(A).

[10] 17 CFR 240.19b–4(f)(6).

[11] 17 CFR 240.19b–4(f)(6).

[12] 17 CFR 240.19b–4(f)(6)(iii).

[13] 17 CFR 200.30–3(a)(12).

SECURITIES AND EXCHANGE COMMISSION

[Release No. 34–45342; File No. SR–NASD–2001–96]

Self-Regulatory Organizations; National Association of Securities Dealers, Inc.; Notice of Filing and Immediate Effectiveness of Proposed Rule Change To Institute a Quotation Update Charge and Introduce a Mechanism for Sharing Market Data Revenue with NASD Members

January 28, 2002.

Pursuant to section 19(b)(1) of the Securities Exchange Act of 1934 (''Act''), 15 U.S.C. 78s(b)(1), notice is hereby given that on December 27, 2001, the National Association of Securities Dealers, Inc. (''NASD'' or ''Association''), through its subsidiary, The Nasdaq Stock Market, Inc. (''Nasdaq''), filed with the Securities and Exchange Commission (''Commission'') the proposed rule change as described in Items I, II, and III below, which Items have been prepared by Nasdaq. On January 18, 2002, Nasdaq filed Amendment No. 1 to the proposed rule change.[1] The Commission is publishing this notice to solicit comments on the proposed rule change, as amended, from interested persons.

I. Self-Regulatory Organization's Statement of the Terms of Substance of the Proposed Rule Change

This is a proposed rule change, on a pilot basis, to: (1) Institute a quotation update charge and (2) introduce a mechanism for sharing market data revenue with NASD members. Pursuant to section 19(b)(3)(A)(ii) of the Act[2] and Rule 19b–4(f)(2) thereunder,[3] Nasdaq has designated this proposal as one establishing or changing a due, fee, or other charge imposed by a self-regulatory organization, and therefore the proposed rule change is effective upon filing as applied to NASD members. The proposed rule change will become operative on a pilot basis, commencing on February 1, 2002 and ending on October 31, 2002. During the pilot period, Nasdaq will assess the effect of the rule change on market participants and Nasdaq and may file additional changes to the level or

[1] *See* Letter from John M. Yetter, Assistant General Counsel, Nasdaq, to Katherine A. England, Assistant Director, Division of Market Regulation (''Division''), Commission (January 15, 2002) (''Amendment No. 1''). In Amendment No. 1, Nasdaq provided further explanation as to its reasons for charging a quotation update fee.

[2] 15 U.S.C. 78s(b)(3)(A)(ii).

[3] 17 CFR 240.19b–4(f)(2).

structure of its fees. The text of the proposed rule change is set forth below. Proposed new language is *italicized*; proposed deletions are in brackets.

* * * * *

7010. System Services

(a)(*1*) Nasdaq Level 1 Service

The charge to be paid by the subscriber for each terminal receiving Nasdaq Level 1 Service is $20 per month. This Service includes the following data:

[(1)] (*A*) Inside bid/ask quotations calculated for securities listed in The Nasdaq Stock Market and securities quoted in the OTC Bulletin Board (OTCBB) service;

[(2)] *(B)* The individual quotations or indications of interest of broker/dealers utilizing the OTCBB service; and

[(3)] (*C*) Last sale information on securities classified as designated securities in the Rule 4630, 4640, and 4650 Series and securities classified as over-the-counter equity securities in the Rule 6600 Series.

(2) Market Data Revenue Sharing

(A) For a pilot period commencing on February 1, 2002 and lasting until October 31, 2002, NASD members shall receive a market data revenue sharing credit. The total credit shall be calculated in accordance with the following formula:

Credit = (0.60) × (Eligible Revenue) × (Member's Volume Percentage)

(B) Definitions. The following definitions shall apply to this Rule:

(i) ''Eligible Revenue'' shall mean:

a. The portion of the net distributable revenues that Nasdaq, through the NASD, is eligible to receive under the Nasdaq UTP Plan, that is attributed to the Nasdaq Level 1 Service for Eligible Securities, minus

b. The portion of the fee charged to Nasdaq by NASD Regulation, Inc. for regulatory services allocated to the Nasdaq Level 1 Service for Eligible Securities.

(ii) ''Eligible Securities'' shall mean all Nasdaq National Market securities and any other security that meets the definition of ''Eligible Security'' in the Nasdaq UTP Plan.

(iii) ''Member's Volume Percentage'' shall mean the average of:

a. the percentage derived from dividing the total number of trades in Eligible Securities conducted on non-Nasdaq transaction systems that the member reports in accordance with NASD trade reporting rules to the Automated Confirmation Transaction Service (''ACT'') by the total number of trades in Eligible Securities reported to ACT by NASD members, and

b. the percentage derived from dividing the total number of shares represented by trades in Eligible Securities conducted on non-Nasdaq transaction systems that the member reports in accordance with NASD trade reporting rules to ACT by the total number of shares represented by all trades in Eligible Securities reported to ACT by NASD members.

(iv) ''Nasdaq UTP Plan'' shall mean the Joint Self-Regulatory Plan Governing the Collection, Consolidation and Dissemination of Quotation and Transaction Information for Nasdaq-Listed Securities Traded on Exchanges on an Unlisted Trading Privilege Basis

(b)–(h) No change.

(i) Transaction Execution Services

(1)–(4) No change.

(5) Quotation Updates

(A) Except as provided in subparagraph (B), for a pilot period commencing on February 1, 2002 and lasting until October 31, 2002, a fee of $0.01 per quotation update will be charged to NASD members that post quotations in the Nasdaq quotation montage. A ''quotation update'' includes any change to the price or size of a displayed quotation or reserve size.

(B) A quotation update fee will not be charged for a change in the displayed quotation or reserve size that is performed automatically by the Nasdaq National Market Execution System (''NNMS'') when an execution against the quotation occurs (other than a change performed by the ''Autoquote Refresh'' functionality of the NNMS, for which a fee will be assessed).

(j)–(q) No change.

* * * * *

II. Self-Regulatory Organization's Statement of the Purpose of, and Statutory Basis for, the Proposed Rule Change

In its filing with the Commission, Nasdaq included statements concerning the purpose of and basis for the proposed rule change and discussed comments it received on the proposed rule change. The text of these statements may be examined at the places specified in Item IV below. Nasdaq has prepared summaries, set forth below in Sections A, B, and C, of the most significant aspects of such statements.

A. Self-Regulatory Organization's Statement of the Purpose of, and Statutory Basis for, the Proposed Rule Change

On September 28, 2001, Nasdaq filed two proposed rule changes to make modifications to the pricing structure for the Nasdaq National Market Execution System (the ''NNMS'' or ''SuperSOES'') and the SelectNet service.[4] These changes were designed as an interim modification to begin the process of aligning the charges to market participants for using the NNMS and SelectNet more closely with the costs of providing these services and the benefits that they provide to market participants. On October 4, 2001, Nasdaq filed two additional proposed rule changes to increase the per share charge for use of the NNMS from $0.001 to $0.002 and introduce a liquidity provider rebate for NASD members.[5] On October 9, 2001, Nasdaq filed a proposed rule change—SR–NASD–2001–71—to introduce a mechanism for sharing market data revenue with NASD members, make modifications to the fees for use of the NNMS and the liquidity provider rebate to calibrate the level of fees and rebates to the contributions that types of market participants make to the support of the Nasdaq market, and introduce a quotation update charge.[6] On November 29, 2001, Nasdaq withdrew SR–NASD–2001–71 prior to the date scheduled for its implementation, December 1, 2001, to allow Nasdaq to make adjustments to the mechanism for market data revenue sharing and the quotation update

[4] *See* Securities Exchange Act Release No. 44899 (Oct. 2, 2001), 66 FR 51707 (Oct. 10, 2001) (SR–NASD–2001–63) and Securities Exchange Act Release No. 44898 (Oct. 2, 2001), 66 FR 51703 (Oct. 10, 2001) (SR–NASD–2001–64). SR–NASD–2001–63 applied the new fees to NASD members, effective upon filing, and was implemented on October 1, 2001. SR–NASD–2001–64 would apply the new fees to national securities exchanges that trade Nasdaq-listed securities pursuant to grants of unlisted trading privileges (''UTP Exchanges'') following Commission approval.

[5] *See* Securities Exchange Act Release No. 44910 (Oct. 5, 2001), 66 FR 52167 (Oct. 12, 2001) (SR–NASD–2001–67) and Securities Exchange Act Release No. 44914 (Oct. 9, 2001), 66 FR 52649 (Oct. 16, 2001) (SR–NASD–2001–68). SR–NASD–2001–67 applied these pilot changes to NASD members, effective upon filing, for a pilot period from November 1, 2001 through October 31, 2002. SR–NASD–2001–68 would apply the increase in the per share charge to UTP Exchanges following Commission approval.

[6] *See* Securities Exchange Act Release No. 44918 (Oct. 10, 2001), 66 FR 52814 (Oct. 17, 2001) (SR–NASD–2001–71) (withdrawn Nov. 29, 2001). Also on October 9, 2001, Nasdaq filed a proposed rule change to increase the per share charge payable by UTP Exchanges that use the NNMS to $0.003. *See* Securities Exchange Act Release No. 44931 (Oct. 12, 2001), 66 FR 53276 (Oct. 19, 2001) (SR–NASD–2001–72).

charge, and to provide interested persons with a greater opportunity to comment on aspects of the prior filing that assessed different levels of fees on different classes of NASD members. In this filing, Nasdaq is reintroducing the quotation update charge and a modified mechanism for market data revenue sharing.

Quotation Update Fee

Nasdaq is instituting a quotation update fee that is applicable to NASD members, in recognition of the fact that the ability to post quotes in the Nasdaq quotation montage provides market participants with the valuable opportunity to advertise the liquidity that they offer. Nasdaq believes that the absence of any charges for quotation updates has encouraged market participants to quote inefficiently, imposing unnecessary burdens on Nasdaq system capacity. Moreover, to the extent that quotations are accessed through non-Nasdaq systems, the firms that post the quotations are currently free riding on the quotation infrastructure provided by Nasdaq. Accordingly, Nasdaq will charge NASD members $0.01 for each quotation update.[7] A ''quotation update'' includes any change to the price or size of a displayed quotation or reserve size. However, a quotation update fee will not be charged for a change in the displayed quotation or reserve size that is performed automatically by the NNMS when an execution against the quotation occurs (other than a change performed by the ''Autoquote Refresh'' functionality of the NNMS, for which a fee will be assessed).

Nasdaq believes that these limitations on the applicability of the quotation update fee enhance one of the primary purposes of the fee, which is to discourage inefficient quoting. According to Nasdaq, an execution against a member's quotation indicates that the member is quoting efficiently, because the member is providing the liquidity that results in order executions. Accordingly, although the resulting quotation changes do impose system burdens, Nasdaq believes that the imposition of a quote update charge in such circumstances is not warranted at this time. A charge is imposed, however, for quotation changes made by the Autoquote Refresh functionality of the NNMS, which restores an NNMS market maker's quotation price and size in accordance with parameters established by the market maker whenever its displayed quotation size and reserve size have been decremented to zero. Nasdaq believes that a charge for quotation updates performed by this functionality is appropriate because it provides a valuable service that assists market makers in meeting their obligation continuously to maintain a two-sided quotation.

Market Data Revenue Sharing

Nasdaq proposes to share with NASD members a portion of the market data revenue that it receives, through the NASD, under the Nasdaq UTP Plan. Under the Plan, a Plan participant receives a share of market data revenues distributed by the Plan's securities information processor (''SIP''), based on reported trades attributable to such participant under the Plan.[8] Nasdaq represents that its proposal is similar to the transaction credit already in effect to share Consolidated Tape Association revenue with NASD members that trade exchange-listed stocks through Nasdaq's Intermarket Trading System[9] and similar revenue sharing programs established by UTP Exchanges.[10]

A member's credit will be 60% of the product of Eligible Revenue and the Member's Volume Percentage. Eligible Revenue is defined as (i) the portion of the net distributable revenues that Nasdaq, through the NASD, is eligible to receive under the Nasdaq UTP Plan, that is attributed to the Nasdaq Level 1 Service for NNM securities or other securities covered by the Nasdaq UTP Plan (''Eligible Securities''), minus (ii) the portion of the fee charged to Nasdaq by NASD Regulation, Inc. (''NASDR'') for regulatory services allocated to the Nasdaq Level 1 Service for Eligible Securities. The Member's Volume Percentage is defined as the average of (i) the percentage derived from dividing the total number of trades in Eligible Securities conducted on non-Nasdaq transaction systems that the member reports in accordance with NASD trade reporting rules to ACT by the total number of trades in Eligible Securities reported to ACT by NASD members, and (ii) the percentage derived from dividing the total number of shares represented by trades in Eligible Securities conducted on non-Nasdaq transaction systems that the member reports in accordance with NASD trade reporting rules to ACT by the total number of shares represented by all trades in Eligible Securities reported to ACT by NASD members. In other words, the credit is 60% of the net Level 1 revenue attributable to the member's reports of non-Nasdaq transaction system trades in Eligible Securities, with the pool of sharable revenue being comprised of Level 1 revenues distributable to Nasdaq under the UTP Plan minus an allocated portion of the NASDR regulation fee, and the member's non-Nasdaq transaction system trade report activity being measured by total number of trades and share volume.

The formula focuses on the reporting of non-Nasdaq system trades, such as internalized trades, because Nasdaq expects that members will have increasingly greater options to report such trades to UTP Exchanges in the future. In order to continue to provide an attractive environment for the reporting of these trades, Nasdaq believes that it is appropriate to share a portion of the data revenue associated with these trades with members that report them to Nasdaq.

Nasdaq believes that the proposed rule change is consistent with the Act, including section 15A(b)(5) of the Act,[11] which requires that the rules of the NASD provide for the equitable allocation of reasonable fees, dues, and other charges among members and issuers and other persons using any facility or system which the NASD operates or controls, and section 15A(b)(6) of the Act,[12] which requires rules that are not designed to permit unfair discrimination between customers, issuers, brokers or dealers. Nasdaq believes that the quotation update fee and the market data revenue sharing credit are allocated in an equitable fashion, based upon a

[7] A quotation update charge will not be imposed on UTP Exchanges at this time, because such a charge is not currently authorized by the Joint Self-Regulatory Organization Plan Governing the Collection, Consolidation and Dissemination of Quotation and transaction Information for Nasdaq-Listed Securities Traded on Exchanges on an Unlisted Trading Privilege Basis (the ''Nasdaq UTP Plan'' or the ''Plan''), which governs the posting of quotes by UTP Exchanges.

[8] At present, Nasdaq serves as the Plan's SIP, and the NASD is the Plan participant that submits trade reports received from NASD members through ACT. Accordingly, the NASD receives market data revenue under the Plan but distributes it to Nasdaq, as the entity that operates markets on the NASD's behalf. Plan participants are currently seeking proposals in order to select a new entity to serve as the Plan's SIP. Moreover, in light of Nasdaq's application for registration as a national securities exchange, Plan participants are discussing an amendment to the Plan that would make Nasdaq a Plan participant, eligible to receive a direct distribution of market data revenue based on the trades attributable to it under the Plan.

[9] *See* NASD Rule 7010(c)(2).

[10] *See, e.g.,* Securities Exchange Act Release No. 45148 (Dec. 11, 2001), 66 FR 65514 (Dec. 19, 2001) (SR–CSE–2001–05) and Securities Exchange Act Release No. 41238 (Mar. 31, 1999), 64 FR 17204 (Apr. 8, 1999) (SR–CSE–99–03). Securities Exchange Act Release No. 40591 (Oct. 22, 1998), 63 FR 58078 (Oct. 29, 1998) (SR–BSE–98–9); Securities Exchange Act Release No. 38237 (Feb. 4, 1997), 62 FR 6592 (Feb. 12, 1997) (SR–CHX–97–01).

[11] 15 U.S.C. 78*o*–3(b)(5).

[12] 15 U.S.C. 78*o*–3(b)(6).

member's quotation update activity and non-Nasdaq system trade reporting activity, respectively.

Moreover, Nasdaq believes that the level of fees charged to market participants under the proposal is reasonable. Nasdaq anticipates that overall fees for the NNMS, SelectNet, and SOES, net of the market data revenue sharing credit, will be comparable to overall fees for the NNMS, SelectNet, and SOES under the pricing changes implemented by Nasdaq on October 1 and November 1, 2001. Such fees are, in turn, estimated to be slightly lower than overall fees for SelectNet and SOES prior to the introduction of the NNMS.

B. Self-Regulatory Organization's Statement on Burden on Competition

Nasdaq believes that the proposed rule change will not result in any burden on competition that is not necessary or appropriate in furtherance of the purposes of the Act.

C. Self-Regulatory Organization's Statement on Comments on the Proposed Rule Change Received From Members, Participants, or Others

Written comments were neither solicited nor received on the proposed rule change contained in this filing. The Commission, however, had received a number of comment letters that referenced SR–NASD–2001–71, a proposed rule change instituting a quotation update fee and market data revenue sharing plan. Nasdaq withdrew SR–NASD–2001–71 prior to its implementation date. Nasdaq believes that for the most part, the comment letters did not focus on the quotation update fee or on the aspects of market data revenue sharing that are reflected in the proposed rule change contained in this filing. Moreover, Nasdaq believes that comments received on SR–NASD–2001–71 are inapposite because the proposed rule change contained in this filing are sufficiently dissimilar from the rule change proposed in SR–NASD–2001–71.

III. Date of Effectiveness of the Proposed Rule Change and Timing for Commission Action

The foregoing rule change has become effective pursuant to section 19(b)(3)(A)(ii) of the Act [13] and subparagraph (f) of Rule 19b-4,[14] thereunder because it establishes or changes a due, fee or other charge imposed by the self-regulatory organization. At any time within 60 days of the filing of the proposed rule change, the Commission may summarily abrogate the rule change if it appears to the Commission that such action is necessary or appropriate in the public interest, for the protection of investors, or otherwise in furtherance of the purposes of the Act.

IV. Solicitation of Comments

Interested persons are invited to submit written data, views, and arguments concerning the foregoing, including whether the proposed rule change, as amended, is consistent with the Act. Persons making written submissions should file six copies thereof with the Secretary, Securities and Exchange Commission, 450 Fifth Street, NW, Washington, DC 20549–0609. Copies of the submission, all subsequent amendments, all written statements with respect to the proposed rule change that are filed with the Commission, and all written communications relating to the proposed rule change between the Commission and any person, other than those that may be withheld from the public in accordance with the provisions of 5 U.S.C. 552, will be available for inspection and copying in the Commission's Public Reference Room. Copies of the filing will also be available for inspection and copying at the principal office of the NASD. All submissions should refer to file number SR–NASD–2001–96 and should be submitted by February 22, 2002.

For the Commission, by the Division of Market Regulation, pursuant to delegated authority.[15]

Margaret H. McFarland,

Deputy Secretary.

[FR Doc. 02–2486 Filed 1–31–02; 8:45 am]

BILLING CODE 8010–01–P

[13] 15 U.S.C. 78s(b)(3)(A)(ii).

[14] 17 CFR 240.19b-4(f).

[15] 17 CFR 200.30–3(a)(12).

SECURITIES AND EXCHANGE COMMISSION

[Release No. 34–45344; File No. SR–NASD–2002–14]

Self-Regulatory Organizations; Notice of Filing and Immediate Effectiveness of Proposed Rule Change by the National Association of Securities Dealers, Inc. To Extend a Pilot Amendment to NASD Rule 4120 Regarding Nasdaq's Authority To Initiate and Continue Trading Halts

January 28, 2002.

Pursuant to Section 19(b)(1) of the Securities Exchange Act of 1934 (''Act''),[1] and Rule 19b–4 thereunder,[2] notice is hereby given that on January 24, 2002, the National Association of Securities Dealers, Inc. (''NASD''), through its subsidiary, The Nasdaq Stock Market, Inc. (''Nasdaq'') filed with the Securities and Exchange Commission (''Commission'') the proposed rule change as described in Items I, II and III below, which Items have been prepared by Nasdaq. Nasdaq filed the proposal pursuant to Section 19(b)(3)(A) of the Act,[3] and Rule 19b–4(f)(6) thereunder,[4] which renders the proposal effective upon filing with the Commission.[5] The Commission is publishing this notice to solicit comments on the proposed rule change from interested persons.

I. Self-Regulatory Organization's Statement of the Terms of Substance of the Proposed Rule Change

Nasdaq proposes to extend a pilot amendment to NASD Rule 4120, which clarified Nasdaq's authority to initiate and continue trading halts in circumstances where Nasdaq believes that extraordinary market activity in a security listed on Nasdaq may be caused by the misuse or malfunction of an electronic quotation, communication, reporting, or execution system operated by, or linked to, Nasdaq. The proposal would extend the pilot for an additional three months, through April 30, 2002. There is no new proposed rule language.

II. Self-Regulatory Organization's Statement of the Purpose of, and Statutory Basis for, the Proposed Rule Change

In its filing with the Commission, Nasdaq included statements concerning the purpose of and basis for its proposal and discussed any comments it received regarding the proposal. The text of these statements may be examined at the places specified in Item IV below. Nasdaq has prepared summaries, set forth in Sections A, B and C below, of the most significant aspects of such statements.

A. Self-Regulatory Organization's Statement of the Purpose of, and Statutory Basis for, the Proposed Rule Change

1. Purpose

On May 11, 2001, Nasdaq filed with the Commission a proposed rule change

[1] 15 U.S.C. 78s(b)(1).

[2] 17 CFR 240.19b–4.

[3] 15 U.S.C. 78s(b)(3)(A).

[4] 17 CFR 240.19b–4(f)(6).

[5] Nasdaq asked the Commission to waive the 5-day pre-filing notice requirement and the 30-day operative delay. *See* Rule 19b–4(f)(6)(iii). 17 CFR 240.19b–4(f)(6)(iii).

to clarify Nasdaq's authority to initiate and continue trading halts in circumstances where Nasdaq believes that extraordinary market activity in a security listed on Nasdaq may be caused by the misuse or malfunction of an electronic quotation, communication, reporting, or execution system operated by, or linked to, Nasdaq.[6] On July 27, 2001, Nasdaq filed Amendment No. 1 to the proposed rule change, which requested that the Commission approve the proposed rule change on a three-month pilot basis, expiring on October 27, 2001.[7] Also on July 27, 2001, the Commission approved the proposed rule change and Amendment No. 1.[8] On September 27, 2001, Nasdaq filed a proposed rule change to extend the pilot period for the rule through January 27, 2002.[9]

As a result of the decentralized and electronic nature of the market operated by Nasdaq, the price and volume of transactions in a Nasdaq-listed security may be affected by the misuse or malfunction of electronic systems, including systems that are linked to, but not operated by, Nasdaq. In circumstances where misuse or malfunction results in extraordinary market activity, Nasdaq believes that it may be appropriate to halt trading in an affected security until the system problem can be rectified. In the period during which the rule change has been in effect, Nasdaq has not had occasion to initiate a trading halt under the rule. Nevertheless, Nasdaq believes that the rule is an important component of its authority to maintain the fairness and orderly structure of the Nasdaq market. Accordingly, Nasdaq believes the rule should remain in effect on an uninterrupted basis.

2. Statutory Basis

Nasdaq believes that the proposal is consistent with the provisions of Section 15A of the Act,[10] with the provisions of Section 15A(b)(6) of the Act,[11] which requires, among other things, that a registered national securities association's rules be designed to prevent fraudulent and manipulative acts and practices, to promote just and equitable principles of trade, and, in general, to protect investors and the public interest.

B. Self-Regulatory Organization's Statement on Burden on Competition

Nasdaq believes that the proposed rule change will impose no burden on competition that is not necessary or appropriate in furtherance of the purposes of the Act.

C. Self-Regulatory Organization's Statement on Comments on the Proposed Rule Change Received From Members, Participants or Others

Instinet Corporation (''Instinet'') has commented on the proposed rule change. Nasdaq has filed a proposed rule change to make permanent the pilot amendment to Rule 4120 (SR–NASD–2001–75). Before the expiration of the pilot period extension proposed herein, Nasdaq will file an amendment to SR–NASD–2001–75 that will modify the proposed rule and seek additional public comment on the rule as modified. Nasdaq will provide the Commission with a statement regarding any comment letters received by the Commission concerning SR–NASD–2001–75, including Instinet's comment letter.

III. Date of Effectiveness of the Proposed Rule Change and Timing for Commission Action

Because the foregoing proposed rule change does not:

(i) Significantly affect the protection of investors or the public interest;

(ii) Impose any significant burden on competition; and

(iii) Become operative for 30 days from the date on which it was filed, or such shorter time as the Commission may designate, it has become effective pursuant to Section 19(b)(3)(A) of the Act[12] and Rule 19b–4(f)(6) thereunder.[13] At any time within 60 days of the filing of the proposed rule change, the Commission may summarily abrogate such rule change if it appears to the Commission that such action is necessary or appropriate in the public interest, for the protection of investors, or otherwise in furtherance of the purposes of the Act.

Nasdaq has requested that the Commission waive the 5-day pre-filing notice requirement and the 30-day operative delay. The Commission finds good cause to waive the 5-day pre-filing notice requirement and the 30-day operative delay because such designation is consistent with the protection of investors and the public interest. Acceleration of the operative date will allow the pilot to operate continuously through April 30, 2002, while the Commission seeks comment on SR–NASD–2001–75. For these reasons, the Commission finds good cause to waive both the 5-day pre-filing requirement and the 30-day operative waiting period.[14]

IV. Solicitation of Comments

Interested persons are invited to submit written data, views, and arguments concerning the foregoing, including whether the proposal is consistent with the Act. Persons making written submissions should file six copies thereof with the Secretary, Securities and Exchange Commission, 450 Fifth Street, NW, Washington, DC 20549–0609. Copies of the submission, all subsequent amendments, all written statements with respect to the proposed rule change that are filed with the Commission, and all written communications relating to the proposed rule change between the Commission and any person, other than those that may be withheld from the public in accordance with the provisions of 5 U.S.C. 552, will be available for inspection and copying in the Commission's Public Reference Room. Copies of such filing will also be available for inspection and copying at the principal office of the NASD. All submissions should refer to file number SR–NASD–2002–14 and should be submitted by February 22, 2002.

For the Commission, by the Division of Market Regulation, pursuant to delegated authority.[15]

Margaret H. McFarland,

Deputy Secretary.

[FR Doc. 02–2491 Filed 1–31–02; 8:45 am]

BILLING CODE 8010–01–P

[6] Securities Exchange Act Release No. 44307 (May 15, 2001), 66 FR 28209 (May 22, 2001) (SR–NASD–2001–37).

[7] *See* July 27, 2001 letter from Thomas P. Moran, Associate General Counsel, Nasdaq, to Alton Harvey, Division of Market Regulation, Commission.

[8] Securities Exchange Act Release No. 44609 (July 27, 2001), 66 FR 40761 (August 3, 2001) (SR–NASD–2001–37).

[9] Securities Exchange Act Release No. 44870 (September 28, 2001), 66 FR 50701 (October 4, 2001) (SR–NASD–2001–60).

[10] 15 U.S.C. 78o–3.

[11] 15 U.S.C. 78o–3(b)(6).

[12] 15 U.S.C. 78s(b)(3)(A).

[13] 17 CFR 240.19b–4(f)(6).

[14] For purposes only of accelerating the operative date of this proposal, the Commission has considered the proposed rule's impact on efficiency, competition, and capital formation. 15 U.S.C. 78c(f).

[15] 17 CFR 200.30–3(a)(12).

SECURITIES AND EXCHANGE COMMISSION

[Release No. 34–45331; File No. SR–NYSE–2001–50]

Self-Regulatory Organizations; Notice of Filing and Immediate Effectiveness of Proposed Rule Change by the New York Stock Exchange, Inc. Extending the Pilot Program for NYSE Direct+ until December 23, 2002

January 24, 2002.

Pursuant to section 19(b)(1) of the Securities Exchange Act of 1934 (''Act'')[1] and Rule 19b–4 thereunder,[2] notice is hereby given that on December 17, 2001, the New York Stock Exchange, Inc. (''NYSE'' or ''Exchange'') filed a proposed rule change with the Securities and Exchange Commission (''SEC'' or ''Commission''). The proposed rule change is described in Items I, II, and III below, which Items have been prepared by the Exchange. The Exchange filed the proposed rule change pursuant to section 19(b)(3)(A) of the Act,[3] and Rule 19b–4(f)(6) thereunder,[4] which renders the proposed rule change effective upon filing with the Commission. The Commission is publishing this notice to solicit comments on the proposed rule change from interested persons.

I. Self-Regulatory Organization's Statement of the Terms of Substance of the Proposed Rule Change

The Exchange is proposing to extend the pilot program period for NYSE Direct+, and all pertinent interpretations, for an additional year, or until December 23, 2002. No changes to previously approved rule language are being proposed.

II. Self-Regulatory Organization's Statement of the Purpose of, and Statutory Basis for, the Proposed Rule Change

In its filing with the Commission, the Exchange included statements concerning the purpose of and basis for the proposed rule change and discussed any comments it received on the proposed rule change. The text of these statements may be examined at the places specified in Item IV below. The Exchange has prepared summaries, set forth in sections A, B, and C below, of the most significant aspects of such statements.

A. Self-Regulatory Organization's Statement of the Purpose of, and Statutory Basis for, the Proposed Rule Change

1. Purpose

On December 22, 2000, the Commission approved a proposed rule change implementing NYSE Direct+, an automatic execution facility for certain limit orders of 1099 shares or less, on a one year pilot basis ending on December 21, 2001.[5] The Exchange has filed this proposed rule change to extend the NYSE Direct+ pilot program for another year, or until December 23, 2002.

The purpose of the original proposed rule change was to provide for the automatic execution of limit orders of 1099 shares or less (''auto ex'' orders) against trading interest reflected in the Exchange's published quotation. Under NYSE Direct+, it is not mandatory that all limit orders of 1099 shares be entered as auto ex orders; rather, the member organization entering the order or its customer if enabled by the member organization can choose to enter an auto ex order when such member organization (or customer) believes that the speed and certainty of an execution at the Exchange's published bid or offer price is in its customer's best interest. In such a case, the member organization enters an auto ex order priced at or above the Exchange's published offer price (in the case of an auto ex order to buy), or an auto ex order priced at or below the Exchange's published bid price (in the case of an auto ex order to sell). The auto ex order then receives an automatic execution without being exposed to the auction market, provided the bid or offer is still available. In any instance where, as specified in Rule 1000 below, the automatic execution feature is not available, the auto ex order will be entered for execution in the Exchange's auction market. Auto ex transactions are identified on the Consolidated Tape with a unique identifier. The Exchange's published bid or offer is automatically decremented to the extent of the size of the auto ex order to reflect the automatic execution. The contra side of the auto ex order execution is the trading interest reflected in the Exchange's bid or offer, with such interest participating in the execution in accordance with the Exchange's auction market principles of priority and parity as codified in NYSE Rule 72. Any member organization or a customer if enabled by the member organization that believed in any particular case that the customer's interests would be best served by affording the customer's order the opportunity for price improvement may enter a limit or market order by means of the SuperDOT system for representation in the auction market, rather than an auto ex order.

The Exchange's proposal was implemented in a new series of rules, Rules 1000 through 1005 and a proposed amendment to Rule 13. The pilot program is currently available for all stocks.[6] A description of all existing Exchange rules affected by NYSE Direct+, as well as the new series of Rules implementing NYSE Direct+ follows:

Rule 13

Rule 13 was amended to define an auto ex order type. An auto ex order now includes a limit order of 1099 shares or less priced at or above the Exchange's published offer (in the case of an order to buy) or at or below the Exchange's published bid (in the case of an order to sell) which shall receive an automatic execution against the interest reflected in the published quotation, provided the size of the published quotation is greater than 100 shares. An auto ex order or any portion thereof that cannot be immediately executed shall be displayed as a limit order in the Exchange's auction market.

The new rules provide as follows:

Rule 1000

Rule 1000 states the basic operative principles providing for automatic execution of limit orders of 1099 shares or less against the Exchange's published quotation. The Rule lists six instances in which the automatic feature would not be available due to market situations, lack of depth in the published quotation, or inappropriate pricing of the auto ex order, as follows:

(i) The NYSE's published quotation is non-firm (pursuant to NYSE Rule 60);

(ii) The NYSE's published quotation has been gapped (pursuant to the Exchange's usual procedures for such situations) for a brief period because of an influx of orders on one side of the market, and the Exchange's published quotation size is 100 shares at the bid and/or offer;

[1] 15 U.S.C. 78s(b)(1).

[2] 17 CFR 240.19b–4.

[3] 15 U.S.C. 78s(b)(3)(A).

[4] 17 CFR 240.19b–4(f)(6). The Exchange filed the pre-filing notice required by Rule 19b–4(f)(6) by filing a written description of the proposed rule change and the text of the proposed rule change on November 28, 2001.

[5] Securities Exchange Act Release No. 43767 (December 22, 2000), 66 FR 834 (January 4, 2001)(SR-NYSE–00–18).

[6] When initially approved, NYSE Direct+ was only implemented for a limited number of stocks prior to being made available for all stocks. *See* Securities Exchange Act Release No. 43767 (December 22, 2001), 66 FR 834 (January 4, 2001) (SR–NYSE–00–18).

(iii) A better price exists in another ITS participating market center for a single-sided auto ex order;

(iv) The NYSE's published bid or offer is 100 shares (see Rule 1002(c));

(v) A transaction outside the Exchange's published quotation pursuant to NYSE Rule 127 is in the process of being completed, in which case the specialist should publish a 100-share bid and/or offer; or

(vi) Trading in the subject security has been halted.

Rule 1000 provides that an auto ex order that cannot be immediately executed for any of the above reasons shall be automatically entered for execution in the Exchange's auction market. Once it is entered in the auction market, it will be treated the same as any other limit order entered onto the Exchange. The Exchange also notes that the provisions of proposed Rule 1000(ii) and (v) are, in effect, examples of proposed Rule 1000(iv) in that each relate to situations where the Exchange's published bid or offer will be 100 shares.

Rule 1000(ii) provides that auto-ex orders will not be executed when the Exchange's published quotation has been gapped for a brief period. The procedure to ''gap'' a quotation involves setting the bid and asked prices at a spread wider than normal in a stock in order to alert market participants that a special situation exists. This may occur if a member proposes to effect a block transaction at a significant premium or discount from the prevailing market and the specialist is aware of interest on the contra side. In such situations, the size of the quotation is set at 100 shares by 100 shares.

Rule 1000(v) provides that auto-ex orders will not be executed when an auction market execution under Exchange Rule 127 is being completed. Rule 127 establishes procedures for executions outside the NYSE's published bid or offer. During the process for completing such transactions, the specialist should publish a bid and/or offer that is 100 shares.

Rule 1001

Rule 1001(a) provides that the contra side of an auto ex execution shall be trading interest reflected in the Exchange's published quotation, consistent with the principles of priority and parity as codified in Exchange Rule 72.

Rule 1001(a) also provides that it shall be the specialist's responsibility, after receiving a report that an auto ex order has been executed, to assign the appropriate number of shares to each bidder or offeror, consistent with the principles of Exchange Rule 72, with a universal contra being reported as the contra to each auto ex execution. Rule 1001(a) also provides that the specialist shall take the contra side of an auto ex execution where the interest in the published quotation against which the auto ex order was executed is no longer available.

Rule 1001(b) provides that if the published bid or offer is not of sufficient depth to fill an auto ex order in its entirety, the unfilled balance of the order shall be displayed in the auction market.

Rule 1001(c) provides that if executions of auto ex orders have traded with all trading interest reflected in the Exchange's published bid or offer, the Exchange shall disseminate a bid or offer at that price of 100 shares until the specialist requotes that market. Auto ex orders will not receive an automatic execution against any 100 share bid or offer, whether a default bid or offer or otherwise, but rather will be displayed in the auction market. Rule 1001(c) provides that the specialist shall be the contra party to any auction market interest seeking to trade against the 100-share default bid or offer.

Rule 1001(d) provides that the concept of precedence based on size, which is codified in Rule 72, shall not apply with respect to the contra side of an auto ex execution, with such contra side interest being assigned, as noted above, in accordance with the principles of priority and parity in Rule 72.

Rule 1002

Rule 1002 provides that auto ex orders may be entered on any day in a particular stock from the time the Exchange has published a bid or offer in that stock until 3:59 p.m., at which time the specialist is preparing the closing transaction in the security. If orders designated as auto ex are entered before a quote is published or after 3:59 p.m., the orders will be treated as limit orders in the auction market.

Rule 1003

Rule 1003 provides that if a transaction is being completed in the auction market, and an execution involving auto ex orders is reported at a different price before the auction market transaction is reported, any tick test applicable to the auction market transaction shall be based on the last reported trade prior to the execution of the auto ex order.

For example, assume the Exchange's published quotation is 20 bid for 5000 shares, with 5000 shares offered at 20.20. The last reported sale is 20.10, which is a plus tick. A broker in the crowd bids 20.10 for 5000 shares, and another broker, representing a short sale order, agrees to trade at the 20.10 bid price. Before the trade at 20.10 is reported, an auto ex order to buy is automatically executed at the 20.20 published offer price, making the trade at 20.10 a minus tick, which would preclude execution of the order to sell short. Rule 1003 provides that, in this instance, the short sale tick test would be based on the last reported sale of 20.10, a plus tick, at the time the crowd brokers agreed to trade.[7]

Rule 1004

Rule 1004 provides that executions of auto ex orders shall elect stop orders and percentage orders electable at the price of such executions. The rule also provides that stop orders so elected shall be executed pursuant to the Exchange's auction market procedures, and shall not be guaranteed executions at the prices of subsequent auto ex executions.

Rule 1005

Rule 1005 in part provides that auto ex orders for the same customer may be entered at time intervals of no less than 30 seconds between entry of each such order, on a per stock basis.

Addition to Rule 476A Summary Fine List. The Exchange also obtained in the original pilot approval to add to the List of Rules subject to imposition of fines under Rule 476A procedures the failure by members or member organizations to comply with the provisions of Rules 1000–1005, which implement the Exchange's NYSE Direct+® facility. Rule 476A provides that the Exchange may impose a fine, not to exceed $5,000, on any member, member organization, allied member, approved person, or registered or non-registered employee of a member or member organization for a minor violation of certain specified Exchange rules.

[7] Rule 1003 is not consistent with the strict application of last reported ''tick'' tests in Rule 10a-1 under the Act or Exchange Rule 440B, and, in conjunction with its initial filing of the rule, the Exchange sought an exemption from Rule 10a-1 for the limited purpose of recognizing that transactions in compliance with tick tests when effected would not be deemed to be violative if reported after an auto ex execution changed the tick. The Commission granted a limited exemption from Rule 10a-1 to permit floor brokers to effect short sales in accordance with Rule 1003 during the NYSE Direct+ pilot subject to certain conditions. *See* Letter from James E. Buck, Secretary and Senior Vice President, Exchange, to Larry E. Bergmann, Senior Associate Director, Division of Market Regulation, SEC, dated December 21, 2000 (''Exemption Request'') and response by Larry E. Bergmann to James E. Buck, dated December 22, 2000 (''Rule 10a-1 Exemption Letter'').

The purpose for the proposed rule change to Rule 476A was to facilitate the Exchange's ability to induce compliance with all aspects of the above-cited rules. The Exchange believed that failure to comply with the requirements of these rules and procedures should be addressed with an appropriate sanction and sought Commission approval to add violations of these requirements to the Rule 476A List so as to have a broad range of regulatory responses available. The Exchange continues to believe that this would more effectively encourage compliance by enabling a prompt, meaningful and heightened regulatory response (*e.g.*, the issuance of a fine rather than a cautionary letter) to a minor violation of these rules.

The Exchange again wishes to emphasize the importance it places upon compliance with the above-named rules. While the Exchange, upon investigation, may determine that a violation of any of these rules is a minor violation of the type which is properly addressed by the procedures adopted under Rule 476A, in those instances where investigation reveals a more serious violation of the above-described rules, the Exchange will provide an appropriate regulatory response. This includes the full disciplinary procedures available under Rule 476.

Interpretive Issues

The Exchange has previously submitted for Commission approval the following interpretations of several NYSE rules, as well as a no action or interpretive position which the Exchange requested the Commission to adopt under its short sale rule, Rule 10a–1.[8] The Exchange requests that these exemptions and interpretations be extended for an additional one year concurrent with the extension of the NYSE Direct+ pilot until December 22, 2002.[9]

These matters concern situations pursuant to proposed Rule 1001(a)(iv) where the specialist may be required to take the contra side of an auto ex execution against the published quotation, even though the specialist's interest was not part of such quotation. For example, the published quotation may reflect the interest of a broker in the Crowd whose interest is then executed in an auction market transaction; but before the published quotation can be updated, an auto ex order is executed against such quotation. In such instance, the specialist would be required to take the contra side of the auto ex execution. In other instances, the Crowd broker might cancel his or her interest as reflected in the published quotation, but an auto ex order might be executed against such quotation before it can be updated. Again, in such instance, the specialist would be required to take the contra side of the auto ex execution.

- *Rule 104.* Rule 104 contains the specialist's affirmative and negative obligations, and restricts the specialists' ability to purchase stock on direct plus ticks, or sell stock on direct minus ticks. The Exchange is proposing that any instance in which the specialist is effecting such a direct tick transaction only because he or she has been required to assume the contra side of an auto ex execution as described above shall be deemed to be a ''neutral'' transaction for purposes of Rule 104, and shall be deemed not to be in violation of the rule. The Exchange believed that this interpretation is appropriate because the specialist is not setting the price, but is simply being required to trade at a price set by other market participants.
- *Rule 10a–1.* Rule 10a–1 under the Act and Exchange Rule 440B do not permit the execution of short sales on minus or zero minus ticks. The Exchange believes that exemptive relief from Rule 10a–1 should continue to apply to a specialist whenever he or she is required to take the contra side of an auto ex execution on a minus or zero minus tick because of Exchange Rule 1001(a)(iv), and has an existing short position, or would be creating a short position by virtue of such execution. In particular, the Exchange believes that the situation where a specialist sells short on a minus or zero minus tick because he or she is required to become the contra-party to an executed auto ex trade in the limited circumstances where the interest reflected in the published quotation against which the auto ex order was executed is no longer available does not implicate the policy concerns of Rule 10a–1.

Further, the Exchange believes that exemptive relief from Rule 10a–1 should continue to apply to allow a floor broker to report a short sale that is on a minus or zero-minus tick relative to the last reported auto ex transaction on the NYSE at the time of the floor broker's report, if at the time the floor broker agreed to sell short, the short sale was not on a minus or zero-minus tick relative to the last reported sale. As with all other trades, floor brokers seeking to rely on Rule 1003 with respect to short sales in auction market transactions subject to Rule 10a–1 and Exchange Rule 440B must report such auction market transactions immediately upon agreement to the trade.[10]

- *Rule 123A.40.* The specialist shall not be required to fill any stop orders elected by an auto ex execution at the price of the electing sale in any instance where the specialist was required by Rule 1001(a)(iv) to take the contra side of an auto ex execution.
- *Rule 91.* As the specialist does not accept an auto ex order for execution or act as agent for such order, the transaction confirmation requirements of Rule 91 shall not be applicable in any instance where the specialist is the contra party to an auto ex execution.

2. Statutory Basis

The Exchange believes that the proposed rule change is consistent with section 6(b)(5) of the Act[11] which requires that an Exchange have rules that are designed to promote just and equitable principles of trade, to remove impediments to and perfect the mechanism of a free and open market and a national market system and, in general, to protect investors and the public interest. The proposed rule change also is designed to support the principles of section 11A(a)(1) of the Act[12] in that it seeks to assure economically efficient execution of securities transactions, make it practicable for brokers to execute investors' orders in the best market and provide an opportunity for investors' orders to be executed without the participation of a dealer.

With respect to the addition to the summary fine list under Rule 476A, the proposed rule change also advances the objectives of section 6(b)(6) of the Act[13] because it provides a procedure whereby member organizations can be ''appropriately disciplined'' in those instances when a rule violation is minor in nature, but a sanction more serious than a warning or cautionary letter is appropriate. The proposed rule change provides a fair procedure for imposing such sanctions, in accordance with the

[8] *See* Exemption Request and Rule 10a–1 Exemption Letter.

[9] *Id.*

[10] *See* Exemption Request and Rule 10a–1 Exemption Letter. In order to verify compliance with Rule 10a–1, where an auto ex transaction takes place while the auction market transaction is being completed and the auto ex price would cause the auction market trade to be reported on a minus or zero-minus tick, the Floor broker effecting the short sale must obtain NYSE Floor Official approval that the transaction was agreed upon at a price in compliance with Rule 10a–1 and Rule 440B. Each such short sale must be reported as a ''sold sale.'' Further, Floor brokers will not be allowed to sell short at a price lower than the best bid displayed in the auction market at the time the transaction is reported.

[11] 15 U.S.C. 78f(b)(5).

[12] 15 U.S.C. 78k–1(a)(1).

[13] 15 U.S.C. 78f(b)(6).

requirements of sections 6(b)(7) and 6(d)(1) of the Act.[14]

B. Self-Regulatory Organization's Statement on Burden on Competition

The Exchange does not believe that the proposed rule change will result in any burden on competition that is not necessary or appropriate in furtherance of the purposes of the Act.

C. Self-Regulatory Organization's Statement on Comments on the Proposed Rule Change Received from Members, Participants, or Others

The Exchange has neither solicited nor received written comments on the proposed rule change.

III. Date of Effectiveness of the Proposed Rule Change and Timing for Commission Action

The foregoing rule change has become effective upon filing pursuant to section 19(b)(3)(A)(iii) of the Act[15] and Rule 19b–4(f)(6)[16] thereunder because the proposed rule change does not (i) significantly affect the protection of investors or the public interest; (ii) impose any significant burden on competition; and (iii) become operative for 30 days from the date on which the proposed rule change was filed, or such shorter time as the Commission may designate. At any time within 60 days of the filing of a rule change pursuant to section 19(b)(3)(A) of the Act, the Commission may summarily abrogate the rule change if it appears to the Commission that such action is necessary or appropriate in the public interest, for the protection of investors, or otherwise in furtherance of the purposes of the Act.

The Commission finds that it is appropriate to accelerate the operative date of the proposed rule change and to permit the proposed rule change to become immediately operative because the proposal simply extends a previously approved pilot program until December 22, 2002.[17] No changes to NYSE Direct+ are being proposed at this time and the Commission has not received any comments on the pilot program. In addition, the Exchange appropriately filed a pre-filing notice as required by Rule 19b–4(f)(6).[18]

[14] 15 U.S.C. 78f(b)(6) and 78f(d)(1).

[15] 15 U.S.C. 78s(b)(3)(A).

[16] 17 CFR 240.19b–4(f)(6).

[17] The Commission confirms that the Rule 10a–1 Exemption Letter remains in effect for the duration of the pilot.

[18] 17 CFR 240.19b–4(f)(6). For purpose only of accelerating the operative date of this proposal, the Commission has considered the proposed rule's impact on efficiency, competition, and capital formation. 15 U.S.C. 78c(f).

IV. Solicitation of Comments

Interested persons are invited to submit written data, views, and arguments concerning the foregoing, including whether the proposed rule change is consistent with the Act. Persons making written submissions should file six copies thereof with the Secretary, Securities and Exchange Commission, 450 Fifth Street, NW., Washington, DC 20549–0609. Copies of the submission, all subsequent amendments, all written statements with respect to the proposed rule change that are filed with the Commission, and all written communications relating to the proposed rule change between the Commission and any person, other than those that may be withheld from the public in accordance with the provisions of 5 U.S.C. 552, will be available for inspection and copying in the Commission's Public Reference Room. Copies of such filing will also be available for inspection and copying at the principal office of the Exchange. All submissions should refer to File No. SR–NYSE–2001–50 and should be submitted by February 22, 2002.

For the Commission, by the Division of Market Regulation, pursuant to delegated authority.[19]

Margaret H. McFarland,

Deputy Secretary.

[FR Doc. 02–2487 Filed 1–31–02; 8:45 am]

BILLING CODE 8010–01–P

[19] 17 CFR 200.30–3(a)(12).

SECURITIES AND EXCHANGE COMMISSION

[Release No. 34–45343; File No. SR–Phlx–2001–120]

Self-Regulatory Organizations; Notice of Filing of Proposed Rule Change and Amendment No. 1 by the Philadelphia Stock Exchange, Inc. to Amend Phlx Rule 237, ''The eVWAP Morning Session''

January 28, 2002.

Pursuant to Section 19(b)(1) of the Securities Exchange Act of 1934 (''Act'')[1] and Rule 19b–4[2] thereunder, notice is hereby given that on December 26, 2001, the Philadelphia Stock Exchange, Inc.(''Phlx'' or ''Exchange'') filed with the Securities and Exchange Commission (''Commission'') the proposed rule change as described in Items I, II, and III below, which Items have been prepared by the Exchange. On January 25, 2002, the Phlx amended the proposal.[3] The Commission is publishing this notice to solicit comments on the proposed rule change, as amended, from interested persons.

[1] 15 U.S.C. 78s(b)(1).

[2] 17 CFR 240.19b–4.

I. Self-Regulatory Organization's Statement of the Terms of Substance of the Proposed Rule Change

The Exchange proposes to amend Phlx Rule 237, ''The eVWAP Morning Session,'' to: (1) Allow Exchange-Traded Fund Shares[4] to be executed on the eVWAP System (''System'');[5] (2) codify order increment size requirements; and (3) make minor technical amendments to Phlx Rule 237.

Background

The System is a daily, pre-opening order matching session for the execution of large-sized stock orders at the volume weighted average price (''VWAP''). The matched and executed orders are assigned a VWAP after the close of regular trading. The System operates as a facility of the Phlx under Section 3(a)(2) of the Act and is governed by Phlx Rule 237.[6]

Currently, the securities eligible for execution in the System pursuant to Phlx Rule 237(b) are exchange listed component issues of the Standard & Poor's 500 index and any exchange listed issue that has been designated by the compiler of the index for inclusion in such index and any of 300 New York Stock Exchange (''NYSE'') issues selected according to a prescribed selection process.[7]

Pursuant to Phlx Rule 237, access to the System is limited to ''Committers,''[8] who enter ''commitments'' and ''Users,''

[3] *See* January 24, 2002 letter from Cynthia K. Hoekstra, Counsel, Phlx, to Joseph P. Morra, Special Counsel, Division of Market Regulation, Commission (''Amendment No. 1''). In Amendment No. 1, the Phlx made minor, technical changes to the proposed rule language.

[4] Exchange-Traded Fund Shares include exchange listed securities representing interests in open-end unit investment trusts or open-end management investment companies that hold securities based on an index or a portfolio of securities. See Phlx Rule 1000(b)(42).

[5] The System was developed by Universal Trading Technologies Corporation, Inc. (''UTTC''). UTTC is a subsidiary of the Ashton Technology Group, Inc.

[6] *See* Securities Exchange Act Release No. 41210 (March 24, 1999), 64 FR 15857 (April 1, 1999) (SR–Phlx–96–14).

[7] The 300 NYSE issues are selected as follows: The top 400 NYSE issues with the highest market capitalization excluding the 100 issues that have the lowest average daily dollar trading volume over 20 days preceding the eligibility determination. Eligibility is determined at least semi-annually. *See* Phlx Rule 237(b).

[8] ''Committers'' are Exchange members that are: (i) Phlx Floor traders (*i.e.,* a Phlx Specialist or Phlx Alternate Specialist in the eligible stock that is the subject of the Commitment); or (ii) Phlx Off-Floor Liquidity Providers (members that commit to provide contra-side liquidity). *See* Phlx Rule 237(d).

who enter ''orders.'' A ''User'' is defined as an Exchange member or non-member who enters orders through the System. Users may enter three types of orders: (i) Basic; (ii) cross; and (iii) facilitation. A basic order is a standard, one-sided order to buy or sell. A basic order may be restricted, meaning it is executable against non-members only. A cross order is a two-sided order, with both sides comprised of non-member interest, with instructions to match the identified buy-side with the identified sell-side. The two sides making up a cross can be entered separately, with the contra-side identified.

A facilitation order is a two-sided order, with an identified Phlx member on the contra-side to act as a facilitator for that order (such member is known as a ''Guarantor''). The contra-side may be entered together with, or separate from, the facilitation order. Facilitation orders can be submitted on behalf of Phlx members or non-members. Unlike basic orders, facilitation orders may not be restricted. One of the three types of facilitation orders that are available to Users is an unconditional facilitation order, which is to be executed against an identified Guarantor or not at all.[9] This order is a type of cross involving a Phlx member Guarantor.

Proposal

The Exchange proposes to amend Phlx Rule 237 to allow ETFs to be eligible for eVWAP trading.[10] In addition, the Exchange proposes to codify two amendments to Phlx Rule 237 allowing: (1) All basic orders and commitments to be entered in 100 share increments, with the minimum order size remaining at 5,000 shares and the minimum commitment size remaining at 2,500 shares; and (2) cross orders, including unconditional facilitation orders, to be excepted from the 5,000 minimum order size requirements and to be executed in 100 share increments, with a minimum order size of 100 shares.[11]

Also, the Exchange proposes to make minor technical amendments to change the reference to stock to security in order to accurately reflect the addition of ETFs and to replace a reference to UTS with eVWAP.[12]

The text of the proposed rule change is below. Additions are in italics; deletions are in brackets.

Rule 237. The eVWAP Morning Session

(a) No change.

(b) Eligible Securities. The following securities will be eligible for execution in the System:

(i) Exchange listed component issues of the Standard & Poor's 500 index and any exchange listed issue that has been designated by the compiler of such index for inclusion in such index.

(ii) Any of 300 New York Stock Exchange (NYSE) issues selected as follows: the 400 NYSE issues with the highest market capitalization excluding the 100 issues that have the lowest average daily dollar trading volume over 20 days preceding the eligibility determination, with eligibility determined at least semi-annually.

(iii) Any Exchange-Traded Fund/ Shares that are eligible for trading on the Exchange.

(c)–(d) No change.

(e) Order Entry. eVWAP orders will only be accepted during the eVWAP Order Entry Time Period from 5:00 a.m. to 9:15 a.m. except the Exchange may establish a different period respecting the *eVWAP* [UTS] trading floor terminal. Morning Session orders will only be eligible for execution on the day the order is placed and only through the eVWAP System. The minimum order size is 5,000 shares *except for unconditional facilitation and cross orders, for which the minimum order size is 100 shares.* The minimum commitment size is 2,500 shares. All orders and commitments must be in *100* [500] share increments including any ''AON'' or ''MON'' designations, as defined below. The Exchange may determine whether different sizes should be established.

(e)(i) No change.

(e)(ii)(c) *security* [stock] symbol;

(f)–(j) No change.

(k) Trading Halts. Nothing in this Rule shall be construed to limit the ability for the Exchange to otherwise halt or suspend trading in any *security* [stock] traded through the eVWAP System.

(l)–(m) No change.

* * * * *

II. Self-Regulatory Organization's Statement of the Purpose of, and Statutory Basis for, the Proposed Rule Change

In its filing with the Commission, the Phlx included statements concerning the purpose of and basis for the proposed rule change and discussed any comments it received on the proposed rule change. The text of these statements may be examined at the places specified in Item IV below. The Phlx has prepared summaries, set forth in Sections A, B, and C below, of the most significant aspects of such statements.

A. Self-Regulatory Organization's Statement of the Purpose of, and Statutory Basis for, the Proposed Rule Change

1. Purpose

The Phlx proposes to amend Phlx Rule 237 to address needs identified to the system operator, namely the addition of ETFs and the codification of certain order increment sizes, in order to attract new business to eVWAP.

The Exchange proposes to allow ETFs to be traded on the System. ETFs are becoming an alternative product to trading the actual securities comprising an index or fund. A number of eVWAP participants have requested that the Phlx make ETFs eligible for inclusion in the system pursuant to Phlx Rule 237 issue eligibility procedures. The Phlx believes that allowing ETFs to be traded through the eVWAP System should help to meet the demands of these institutional traders and other market participants that desire volume weighted average price-based transactions on ETFs. Moreover, the Phlx believes that adding ETFs to the System should increase eVWAP order flow and provide additional trading alternatives to market participants.

The Phlx proposes to codify two changes to Phlx Rule 237 regarding order and commitment size. The Exchange sought to promote additional trading through the System by allowing: (1) all basic orders and commitments to be entered in 100 share increments, with the minimum order size remaining at 5,000 shares and the minimum commitment size remaining at 2,500 shares; and (2) cross orders, including unconditional facilitation orders, to be

[9] The other two types of facilitation orders that are available to Users are (i) conditional facilitation orders: Execute against an identified Guarantor after attempting to be executed against non-members to the extent possible; and (ii) last resort facilitation: Execute against an identified Guarantor only after attempting to execute against all other orders and commitments to the extent possible.

[10] The ETF trades executed through eVWAP will be reported pursuant to the applicable reporting channel, the Consolidated Tape Association. Initially, the Exchange intends to include one ETF, which is currently traded on the Exchange's equity floor, to the System. Other ETFs may be listed pursuant to unlisted trading privileges (''UTP'') even if not traded on the Phlx equity floor during regular trading hours.

[11] These modifications were approved by the Exchange's Floor Procedure Committee on March 22, 2001 (cross orders) and July 17, 2001 (minimum order and commitment size). These modifications were based on market and participant need and did not require prior Commission approval. *See* Securities Exchange Act Release No. 41210 (March 24, 1999), 64 FR 15857 (April 1, 1999) (SR–Phlx–96–14).

[12] Previously, references to UTS were eliminated and replaced by eVWAP. However, one reference to UTS was not changed. *See* Securities Exchange Act Release Nos. 42702 (April 19, 2000), 65 FR 24528 (April 26, 2000) (SR–Phlx–2000–19) and 44230 (April 19, 2001), 66 FR 21427 (April 30, 2001) (SR–Phlx–2001–10).

excepted from the 5,000 minimum order size requirements and to be executed in 100 share increments, with a minimum order size of 100 shares. The Phlx believes these changes in order and commitment size should encourage trading through the System by eliminating previously imposed order and commitment size restrictions. This aspect of the proposal is intended to codify expressly into the rule a previously implemented modification.[13] The Exchange believes that reflecting the size into the rule should make it more apparent to potential participants that smaller sizes are permissible, thereby potentially attracting new business.

The proposed rule change also makes minor technical amendments to Phlx Rule 237 to change the reference from stock to security to more accurately reflect the addition of ETFs and to replace a reference to UTS with eVWAP.

2. Statutory Basis

The Exchange believes the proposed rule change is consistent with Section 6 of the Act[14] in general, and in particular, with Section 6(b)(5),[15] in that it is designed to promote just and equitable principles of trade, and to remove impediments to and perfect the mechanism of a free and open market and a national market system by expanding the number of securities eligible for eVWAP trading and to codify order and commitment size requirements to promote trading activity.

B. Self-Regulatory Organization's Statement on Burden on Competition

The Phlx does not believe that the proposed rule change would impose any inappropriate burden on competition.

C. Self-Regulatory Organization's Statement on Comments on the Proposed Rule Change Received From Members, Participants, or Others

No written comments were either solicited or received.

III. Date of Effectiveness of the Proposed Rule Change and Timing for Commission Action

Within 35 days of the date of publication of this notice in the **Federal Register** or within such longer period (i) as the Commission may designate up to 90 days of such date if it finds such longer period to be appropriate and publishes its reasons for so finding, or (ii) as to which the Exchange consents, the Commission will:

(A) By order approve such proposed rule change; or

(B) Institute proceedings to determine whether the proposed rule change should be disapproved.

IV. Solicitation of Comments

Interested persons are invited to submit written data, views, and arguments concerning the foregoing, including whether the proposed rule change is consistent with the Act. Persons making written submissions should file six copies thereof with the Secretary, Securities and Exhange Commission, 450 Fifth Street, NW., Washington, DC 20549–0609. Copies of the submission, all subsequent amendments, all written statements with respect to the proposed rule change that are filed with the Commission, and all written communications relating to the proposed rule change between the Commission and any person, other than those that may be withheld from the public in accordance with the provisions of 5 U.S.C. 552, will be available for inspection and copying in the Commission's Public Reference Room. Copies of such filings will also be available for inspection and copying at the principal office of the Phlx. All submissions should refer to File No. SR–Phlx–2001–120 and should be submitted by February 22, 2002.

For the Commission, by the Division of Market Regulation, pursuant to delegated authority.[16]

Margaret H. McFarland,

Deputy Secretary.

[FR Doc. 02–2490 Filed 1–31–02; 8:45 am]

BILLING CODE 8010–01–P

[13] See footnote 10, supra.

[14] 15 U.S.C. 78f.

[15] 15 U.S.C. 78f(b)(5).

[16] 17 CFR 200.30–3(a)(12).

SOCIAL SECURITY ADMINISTRATION

Agency Information Collection Activities: Notice of Office of Management and Budget (OMB) Approval, Proposed Request and Comment Request

ACTION: Notice of OMB Approval

As required by the Paperwork Reduction Act of 1995 (44 U.S.C. 3507), the Social Security Administration (SSA) is providing notice of OMB's approval of the information collections in the final rule, Revised Medical Criteria for Determination of Disability, Musculoskeletal System and Related Criteria, part 404, subpart, appendix 1. In accordance with the Paperwork Reduction Act, persons are not required to respond to an information collection unless it displays a valid Office of Management and Budget control number. The OMB Number is 0960–0642, which expires December 31, 2004.

ACTION: Proposed Request and Comment Request

The Social Security Administration (SSA) publishes a list of information collection packages that will require clearance by the Office of Management and Budget (OMB) in compliance with Pub. L. 104–13 effective October 1, 1995, The Paperwork Reduction Act of 1995. SSA is soliciting comments on the accuracy of the agency's burden estimate; the need for the information; its practical utility; ways to enhance its quality, utility and clarity; and on ways to minimize burden on respondents, including the use of automated collection techniques or other forms of information technology.

Written comments and recommendations regarding the information collection(s) should be submitted to the OMB Desk Officer and the SSA Reports Clearance Officer and at the following addresses:

(OMB), Office of Management and Budget, Attn: Desk Officer for SSA, New Executive Office Building, Room 10230, 725 17th St., NW., Washington, DC 20503.

(SSA), Social Security Administration, DCFAM, Attn: Reports Clearance Officer, 1–A–21 Operations Bldg., 6401 Security Blvd., Baltimore, MD 21235.

I. The information collections listed below will be submitted to OMB within 60 days from the date of this notice. Therefore, your comments should be submitted to SSA within 60 days from the date of this publication. You can obtain copies of the collection instruments by calling the SSA Reports Clearance Officer at 410–965–0454, or by writing to the address listed above.

1. Employee Work Activity Report—0960–0483. The data collected by the Social Security Administration on Form SSA–3033 is reviewed and evaluated to determine if the claimant meets the disability requirements of the law, when the claimant returns to work after the alleged or established onset date of disability. When a possible unsuccessful work attempt or nonspecific subsidy is involved (and the information cannot be obtained through telephone contact), Form SSA–3033 will be used to request a description, by mail, of the employee's work effort. The respondents are employers of Old Age, Survivors and Disability Insurance and Supplemental

Security Income disability applicants and beneficiaries.

Number of Respondents: 12,500.

Frequency of Response: 1.

Average Burden Per Response: 15 minutes.

Estimated Annual Burden: 3,125 hours.

2. State Agency Ticket Assignment Form, SSA–1365, State Vocational Rehabilitation Ticket to Work Information Sheet, SSA–1366 and Individual Work Plans (IWP) Information Sheet, SSA–1367—0960–0641.

Background

Public Law (Pub. L.) 106–170, the Ticket to Work and Work Incentives Improvement Act of 1999, created a new Ticket to Work (TTW) program for providing work access services to SSA beneficiaries. The new program requires SSA to monitor the services provided under the Law. SSA has developed three data collection forms that request service provider and beneficiary information, which is essential to SSA's administration of this new program. Employment networks (ENs) providing TTW services under contracts with SSA are required to submit to SSA the information listed in form SSA–1367. State vocational rehabilitation agencies (VRAs) that provide services to SSA beneficiaries under either the traditional VR reimbursement mechanism or the new TTW program are required to submit to SSA the information listed in forms SSA–1365 and SSA–1366. SSA does not require that ENs or VRAs use forms SSA–1366 and SSA–1367 per se, but does require that any alternative forms submitted in place of these SSA forms include the SSA listed information at a minimum. VRAs are required to submit Form SSA–1365 in all cases as a means of assigning Tickets to VRAs.

a. State Agency Ticket Assignment Form—SSA–1365. The information collected on this form will be used by SSA's contracted Program Manager (PM) to perform the task of assigning beneficiaries' tickets and monitoring the use of tickets under the Ticket to Work and Self-Sufficiency Program. The State VRA answers the questions and the beneficiary reviews the data and if in agreement will sign the form acknowledging the Ticket assignment. The respondents are State VR agencies.

Number of Respondents: 21.

Frequency of Response: 4,048 annually per respondent.

Average Burden Per Response: 3 minutes.

Estimated Annual Burden: 4,250 hours.

b. State Vocational Rehabilitation Ticket to Work Information Sheet-SSA–1366. The information collected on Form SSA–1366 will be used by SSA's contracted PM when a State VRA elects to participate in the Program as an EN. In this case, form SSA–1366, when combined with the SSA–1365, is intended to meet the minimum information requirements for IWPs and to monitor the appropriateness of the IWPs as required under the Pub. L. 106–107. The respondents are VRAs acting as ENs under the Ticket to Work Program.

Number of Respondents: 21.

Frequency of Response: 132 annually per respondent.

Average Burden Per Response: 2 minutes.

Estimated Annual Burden: 92 hours.

Please Note: The Ticket to Work Program is being implemented in stages. The above represents the initial phase of the program with 13 participating states that include 21 State VR agencies. As the program continues to be phased in, each initial program year will result in a larger number of new tickets for the participating State VRs because existing clients will also be brought into the program.

c. Individual Work Plans (IWP) Information Sheet-SSA–1367. The information collected on Form SSA–1367 will be used to monitor the appropriateness of IWPs that have been assigned to ENs under the TTW program. The respondents are ENs under the TTW program.

Number of Respondents: 31,450.

Frequency of Response: 1 annually per respondent.

Average Burden Per Response: 3 minutes.

Estimated Annual Burden: 1,573 hours.

4. Statement Regarding the Inferred Death of an Individual By Reason of Continued and Unexplained Absence—0960–0002. The information collected on Form SSA–723–F4 is needed to determine if SSA may presume that a missing wage earner is dead and, if so, to establish a date of presumed death. The respondents are people who have knowledge of the disappearance of the wage earner.

Number of Respondents: 3,000.

Frequency of Response: 1.

Average Burden Per Response: 30 minutes.

Estimated Annual Burden: 1,500 hours.

II. The information collections listed below have been submitted to OMB for clearance. Your comments on the information collections would be most useful if received by OMB and SSA within 30 days from the date of this publication. You can obtain a copy of the OMB clearance package by calling the SSA Reports Clearance Officer on (410) 965–0454, or by writing to the address listed above.

1. Information Collections Conducted by State Disability Determination Services (DDS) on Behalf of SSA—0960–0555. The State DDS's collect certain information to administer SSA's disability program. The information collected is as follows: (1) Medical evidence of record (MER)—DDS's use MER information to determine a person's physical and/or mental status prior to making a disability determination; (2) consultative exam (CE) medical evidence—DDS's use CE medical evidence to make disability determinations when the claimant's own medical sources cannot or will not provide the information; (3) CE claimant forms—The DDS's request that claimants complete an authorization form for the release of consultative exam information to a personal physician and to complete an appointment form to confirm scheduled CE appointments; (4) CE provider information—DDS's use the CE provider information to verify medical providers' credentials and licenses before hiring them to conduct CEs; (5) activities of daily living (ADL)—this information and other medical evidence are part of the evidentiary documentation used by the DDS's in evaluating a person's disability; and (6) pain information—this information is used by the DDS's to assess the effects of symptoms on functioning for determining disability. The respondents are medical providers, other sources of MER and disability claimants.

(1) MER (respondents-medical providers and other sources)

Number of Responses: 6,052,494.

Frequency of Response: Unknown.

Average Burden Per Response: 15 minutes.

Estimate Annual Burden: 1,513,124.

(2) CE Medical Evidence (respondents-medical providers)

Number of Responses: 1,640,269.

Frequency of Response: Unknown.

Average Burden Per Response: 30 minutes.

Estimated Annual Burden: 820,135 hours.

(3) CE Forms (respondents-claimants)

	Appointment form	Medical release
Number of Respondents	820,134	1,640,269.
Frequency of Response	1	1.
Average Burden Per Response	5 minutes	5 minutes.
Estimated Annual Burden	68,345 hours	136,689 hours.

(4) CE Providers (respondents-medical providers)

Number of Responses: 3,000.
Frequency of Response: 1.
Average Burden: 20 minutes.
Estimated Annual Burden: 1,000 hours.

(5) ADL (respondents-claimants)

Number of Responses: 2,000,000.
Frequency of Response: 1.
Average Burden Per Response: 15 minutes.
Estimated Annual Burden: 500,000 hours.

(6) Pain (respondents-claimants)

Number of Responses: 1,000,000.
Frequency of Response: 1.
Average Burden Per Response: 15 minutes.
Estimated Average Burden: 250,000 hours.

2. Application for U.S. Benefits Under the Canada-U.S. International Agreement—0960–0371. The information collected on Form SSA–1294 is used to determine entitlement to benefits. The respondents are individuals who live in Canada and file for U.S. Social Security benefits.
Number of Respondents: 1,000.
Frequency of Response: 1.
Average Burden Per Response: 15 minutes.
Estimated Annual Burden: 250 hours.

3. Statement of Death by Funeral Director—0960–0142. The Social Security Administration (SSA) uses the information on form SSA–721 to make timely and accurate decisions based on a report of death. The respondents are funeral directors with knowledge of the fact of death.
Number of Respondents: 1,059,400.
Frequency of Response: 1.
Average Burden Per Response: 4 minutes.
Estimated Annual Burden: 70,627 hours.

4. Statement Regarding Marriage—0960–0017. Form SSA–753 elicits information from third parties to verify the applicant's statements about intent, cohabitation, and holding out to the public as being married, which are the basic tenets of a common-law marriage. The responses are used by SSA to determine if a valid marital relationship exists and to make an accurate determination regarding entitlement to spouse/widow(er) benefits. The respondents are individuals who are familiar with and can provide confirmation of an applicant's common-law marriage.
Number of Respondents: 40,000.
Frequency of Response: 1.
Average Burden Per Response: 9 minutes.
Estimated Annual Burden: 6,000.

5. Quarterly Statistical Report on Recipients and Payments Under State-Administered Assistance Programs for Aged, Blind, and Disabled (Individuals and Couples) Recipients—0960–0130. The information collected by SSA on Form SSA–9741 is used by States to provide statistical data on recipients and assistance payments under the SSI State-administered State Supplementation Programs. The data are needed to complement information available for the programs administered by SSA and to fully explain the impact of the public income support programs on the needy, aged, blind, and disabled. SSA personnel request data about State-administered supplementation programs to compare various State programs, to examine the relationship of State supplementation expenditures and caseloads to federally-financed programs such as Medicaid, and to determine the effect of changes in SSI and other Federal programs on State supplementation programs. The respondents are State agencies who administer supplementary payment programs under SSI.
Number of Respondents: 30.
Frequency of Response: 4.
Average Burden Per Response: 60 minutes.
Estimated Annual Burden: 120 hours.

Dated: January 28, 2002.

Elizabeth A. Davidson,

Acting Reports Clearance Officer, Social Security Administration.

[FR Doc. 02–2429 Filed 1–31–02; 8:45 am]

BILLING CODE 4191–02–U

DEPARTMENT OF STATE

[Public Notice 3903]

Culturally Significant Objects Imported for Exhibition Determinations: ''Central European Avant-Gardes: Exchange and Transformation, 1910–1930''

AGENCY: Department of State.

ACTION: Notice.

SUMMARY: Notice is hereby given of the following determinations: Pursuant to the authority vested in me by the Act of October 19, 1965 (79 Stat. 985; 22 U.S.C. 2459), Executive Order 12047 of March 27, 1978, the Foreign Affairs Reform and Restructuring Act of 1998 (112 Stat. 2681, *et seq.*; 22 U.S.C. 6501 note, *et seq.*), Delegation of Authority No. 234 of October 1, 1999, and Delegation of Authority No. 236 of October 19, 1999, as amended, I hereby determine that the objects to be included in the exhibition: ''Central European Avant-Gardes: Exchange and Transformation, 1910–1930,'' imported from abroad for temporary exhibition within the United States, are of cultural significance. The objects are imported pursuant to loan agreements with the foreign owners. I also determine that the exhibition or display of the exhibit objects at the Los Angeles County Museum of Art, Los Angeles, CA, from on or about March 10, 2002, to on or about June 2, 2002, and at possible additional venues yet to be determined, is in the national interest. Public Notice of these Determinations is ordered to be published in the **Federal Register**.

FOR FURTHER INFORMATION CONTACT: For further information, including a list of the exhibit objects, contact Julianne Simpson, Attorney-Adviser, Office of the Legal Adviser, U.S. Department of State, (telephone: 202/619–6529). The address is U.S. Department of State, SA–44, 301 4th Street, SW., Room 700, Washington, DC 20547–0001.

Dated: January 29, 2002.

Patricia S. Harrison,

Assistant Secretary for Educational and Cultural Affairs, Department of State.

[FR Doc. 02–2606 Filed 1–31–02; 8:45 am]

BILLING CODE 4710–08–Pse

DEPARTMENT OF STATE

[Public Notice 3902]

Culturally Significant Objects Imported for Exhibition Determinations: ''Tapestry in the Renaissance: Art and Magnificence''

DEPARTMENT: United States Department of State.

ACTION: Notice.

SUMMARY: Notice is hereby given of the following determinations: Pursuant to the authority vested in me by the Act of October 19, 1965 [79 Stat. 985; 22 U.S.C. 2459], Executive Order 12047 of March 27, 1978, the Foreign Affairs Reform and Restructuring Act of 1998 [112 Stat. 2681, *et seq.*; 22 U.S.C. 6501 note, *et seq.*], Delegation of Authority No. 234 of October 1, 1999 [64 FR 56014], and Delegation of Authority No. 236 of October 19, 1999 [64 FR 57920], as amended, I hereby determine that the objects to be included in the exhibition, ''Tapestry in the Renaissance: Art and Magnificence,'' imported from abroad for temporary exhibition within the United States, are of cultural significance. These objects are imported pursuant to loan agreements with the foreign lenders. I also determine that the exhibition or display of the exhibit objects at the Metropolitan Museum of Art, New York, New York, from on or about March 11, 2002, to on or about June 19, 2002, and at possible additional venues yet to be determined, is in the national interest. Public Notice of these determinations is ordered to be published in the **Federal Register**.

FOR FURTHER INFORMATION CONTACT: For further information, including a list of exhibit objects, contact Paul W. Manning, Attorney-Adviser, Office of the Legal Adviser, 202/619–5997, and the address is United States Department of State, SA–44, Room 700, 301 4th Street, SW., Washington, DC 20547–0001.

Dated: January 17, 2002.

Brian J. Sexton,

Acting Assistant Secretary for Educational and Cultural Affairs, Department of State.

[FR Doc. 02–2547 Filed 1–31–02; 8:45 am]

BILLING CODE 4710–08–U

TENNESSEE VALLEY AUTHORITY

Paperwork Reduction Act of 1995, as Amended by Public Law 104–13; Proposed Collection, Comment Request

AGENCY: Tennessee Valley Authority.

ACTION: Proposed collection; comment request.

SUMMARY: The proposed information collection described below will be submitted to the Office of Management and Budget (OMB) for review, as required by the Paperwork Reduction Act of 1995 (44 U.S.C. Chapter 35, as amended). The Tennessee Valley Authority is soliciting public comments on this proposed collection as provided by 5 CFR section 1320.8(d)(1). Requests for information, including copies of the information collection proposed and supporting documentation, should be directed to the Agency Clearance Officer: Wilma H. McCauley, Tennessee Valley Authority, 1101 Market Street (EB 5B), Chattanooga, Tennessee 37402–2801; (423) 751–2523.

Comments should be sent to the Agency Clearance Officer no later than April 2, 2002.

SUPPLEMENTARY INFORMATION:

Type of Request: Regular submission, proposal to extend without revision a currently approved collection of information (OMB control number 3316–0104).

Title of Information Collection: Economic Assessment of Waterway Docks and Terminals in the Tennessee Valley and Parts of the Surrounding National Inland Waterway Network.

Frequency of Use: Occasional.

Type of Affected Public: Federal, State and Local Governments, and Private Industry.

Small Businesses or Organizations Affected: Yes.

Federal Budget Functional Category Code: 450.

Estimated Number of Annual Responses: 1700.

Estimated Total Annual Burden Hours: 3400 hours.

Estimated Average Burden Hours Per Response: 2 hours.

Need For and Use of Information: The information collection is necessary to assess the service capability of waterway docks and terminals located in the Tennessee Valley and surrounding States. The data will be used to help potential industrial clients with decisions regarding transportation information and the handling capabilities of waterway facilities located on various river segments. This is vital information for industry when deciding on the most economical location for a new plant site or project. In addition, the data collection surrounding the waterway terminals located on the Tennessee River is necessary for use in updating TVA's river performance indicator.

Jacklyn J. Stephenson,

Senior Manager, Enterprise Operations, Information Services.

[FR Doc. 02–2462 Filed 1–31–02; 8:45 am]

BILLING CODE 8120–08–P

DEPARTMENT OF TRANSPORTATION

Coast Guard

[CGD08–01–054]

Notice of Public Hearing on Vancouver Railroad Bridge Across the Columbia River, Mile 105.6, at Vancouver, WA

AGENCY: Coast Guard, DOT.

ACTION: Notice of public hearing.

SUMMARY: The Coast Guard will hold a public hearing to receive comments concerning the alteration of the Vancouver Railroad Bridge at Vancouver, Washington. The hearing will allow interested persons to present comments and information concerning the unreasonably obstructive nature of the bridge.

DATES: The hearing will be held on March 5, 2002, commencing at 6:30 p.m. Comments must be received by February 15, 2002. Requests to speak must be received in the Office of Bridge Administration at the address given under **ADDRESSES** by February 15, 2002.

ADDRESSES: The hearing will be held in the Commission Room, Port of Portland, 121 NW Everett, Portland, Oregon 97209.

Written comments may be submitted to, and will be available for examination between 8 a.m. to 4 p.m., Monday through Friday, except Federal holidays, at the office of the Commander Eighth Coast Guard District (obr), Bridge Administration Branch, 1222 Spruce Street, St. Louis, MO 63103–2832. Please submit all comments in an unbound format, no larger than 8 x 11 inches, suitable for copying and electronic filing. Persons wanting acknowledgement of receipt of comments should enclose a stamped, self-addressed postcard or envelope.

FOR FURTHER INFORMATION CONTACT: Mr. Roger K. Wiebusch, Bridge Administrator, telephone (314) 539–3900 extension 378.

SUPPLEMENTARY INFORMATION:

Background

Complaints have been received alleging that the bridge is unreasonably obstructive to navigation. Information available to the Coast Guard indicates two bridge allisions have occurred and numerous other bridge allisions have been narrowly avoided between 1991 and 2000. The navigation opening of the bridge is 200 feet. The Vancouver Railroad Bridge is located 0.8 mile downstream from the I–5 Highway Bridge. The highway bridge influences the approach of vessels to the navigation span of the railroad bridge. Based on the

comments received at the public hearing, the bridge may be found to be unreasonably obstructive to navigation. Such a finding may require relocating and increasing the horizontal clearance of the railroad bridge to meet the needs of navigation.

Procedural

Any person, who wishes, may appear and be heard at this public hearing. Individuals and representatives of organizations that wish to present testimony at the hearing may submit a request to this office at the address listed under **ADDRESSES** clearly indicating name and organization represented. Requests to speak should be received no later than February 15, 2002 in order to ensure proper scheduling for the hearing. Depending on the number of scheduled statements, it may be necessary to limit the amount of time allocated to each person. Any limitation of time allocated will be announced at the beginning of the hearing. Written statements and other exhibits may be submitted in lieu of, or in addition to, oral statements made at the hearing, and may be submitted to this office at the address listed under **ADDRESSES** until February 15, 2002, for inclusion in the public hearing transcript. Transcripts of the hearing will be made available for purchase upon request.

Information on Services for Individuals With Disabilities

For information about facilities or services for individuals with disabilities or to request special assistance at the meeting, contact Commander, Eighth Coast Guard District (obr). Please request these services by contacting this office at the phone number under **FOR FURTHER INFORMATION CONTACT** or in writing at the address listed under **ADDRESSES**. Any requests for an oral or sign language interpreter must be received by February 15, 2002.

Authority: 33 U.S.C. 513; 49 CFR 1.46.

Dated: January 2, 2002.

J.R. Whitehead,

Captain, U.S. Coast Guard, Commander, 8th Coast Guard Dist., Acting.

[FR Doc. 02–2544 Filed 1–31–02; 8:45 am]

BILLING CODE 4910–15–P

DEPARTMENT OF TRANSPORTATION

Federal Aviation Administration

Advisory Circular 23.143–1, Ice Contaminated Tailplane Stall (ICTS)

AGENCY: Federal Aviation Administration (FAA), DOT.

ACTION: Notice of availability of Advisory Circular 23.143–1, Ice Contaminated Tailplane Stall (ICTS).

SUMMARY: This notice announces the availability of Advisory Circular 23.143–1, Ice Contaminated Tailplane Stall (ICTS), which provides information and guidance concerning ice contaminated tailplane stall.

FOR FURTHER INFORMATION CONTACT: Paul Pellicano, Aerospace Engineer, FAA, Atlanta Aircraft Certification Office, One Crown Center, 1895 Phoenix Boulevard, suite 450, Atlanta, Georgia 30349; telephone: (770) 703–6064; facsimile: (770) 703–6097.

SUPPLEMENTARY INFORMATION:

Discussion

You may download a copy from the FAA Web site at *http://www.faa.gov/certification/ aircraft/small_airplane_directorate_news_latest.html*, or request a copy by contacting the person named above under **FOR FURTHER INFORMATION CONTACT**.

This advisory circular (AC) sets forth an acceptable means, but not the only means, of demonstrating compliance with the longitudinal (pitch) axis flight characteristics requirements of Title 14 of the Code of Federal Regulations (14 CFR) part 23 when ice has accreted on the airframe. The FAA developed this AC to give more detailed and uniform guidance in showing compliance with the control and maneuver requirements of section 23.143.

Issued in Kansas City, Missouri on January 23, 2002.

Michael K. Dahl,

Acting Manager, Small Airplane Directorate, Aircraft Certification Service.

[FR Doc. 02–2537 Filed 1–31–02; 8:45 am]

BILLING CODE 4910–13–P

DEPARTMENT OF TRANSPORTATION

Federal Aviation Administration

[Summary Notice No. PE–2001–98]

Petitions for Exemption; Summary of Petitions Received

AGENCY: Federal Aviation Administration (FAA), DOT.

ACTION: Notice of petitions for exemption received.

SUMMARY: Pursuant to FAA's rulemaking provisions governing the application, processing, and disposition of petitions for exemption part 11 of Title 14, Code of Federal Regulations (14 CFR), this notice contains a summary of certain petitions seeking relief from specified requirements of 14 CFR. The purpose of this notice is to improve the public's awareness of, and participation in, this aspect of FAA's regulatory activities. Neither publication of this notice nor the inclusion or omission of information in the summary is intended to affect the legal status of any petition or its final disposition.

DATES: Comments on petitions received must identify the petition docket number involved and must be received on or before February 21, 2002.

ADDRESSES: Send comments on any petition on the Docket Management System, U.S. Department of Transportation, Room Plaza 401, 400 Seventh Street, SW., Washington, DC 20590–0001. You must identify the docket number FAA–2000–XXXX at the beginning of your comments. If you wish to receive confirmation that FAA received your comments, include a self-addressed, stamped postcard.

You may also submit comments through the Internet to *http://dms.dot.gov.* You may review the public docket containing the petition, any comments received, and any final disposition in person in the Dockets Office between 9 a.m. to 5 p.m., Monday through Friday, except Federal holidays. The Dockets Office (telephone 1–800–647–5527) is on the plaza level of the NASSIF Building at the Department of Transportation at the above address. Also, you may review public dockets on the Internet at *http://dms.dot.gov.*

FOR FURTHER INFORMATION CONTACT: Forest Rawls (202) 267–8033, Sandy Buchanan-Sumter (202) 267–7271, or Vanessa Wilkins (202) 267–8029, Office of Rulemaking (ARM–1), Federal Aviation Administration, 800 Independence Avenue, SW., Washington, DC 20591.

This notice is published pursuant to 14 CFR 11.85 and 11.91.

Issued in Washington, DC, on January 18, 2002.

Donald P. Byrne,

Assistant Chief Counsel for Regulations.

Petitions for Exemption

Docket No: FAA–2001–11134.

Petitioner: Lufthansa Technik AG.

Section of 14 CFR Affected: 14 CFR 25.785(j).

Description of Relief Sought: To allow Lufthansa Technik to configure the Boeing Model 737–800 airplane for private, not-for-hire use and be exempted, in the configuration of the interior areas specified as the ''Private Bedroom'' and the ''First Class'' sections, from the requirement for a ''firm handhold along each aisle.''

[FR Doc. 02–2541 Filed 1–31–02; 8:45 am]

BILLING CODE 4910–13–M

DEPARTMENT OF TRANSPORTATION

Federal Aviation Administration

[Summary Notice No. PE–2002–08]

Petitions for Exemption; Summary of Petition Received

AGENCY: Federal Aviation Administration (FAA), DOT.

ACTION: Notice of petition for exemption received.

SUMMARY: Pursuant to FAA's rulemaking provisions governing the application, processing, and disposition of petitions for exemption part 11 of Title 14, Code of Federal Regulations (14 CFR), this notice contains a summary of a petition seeking relief from specified requirements of 14 CFR. The purpose of this notice is to improve the public's awareness of, and participation in, this aspect of FAA's regulatory activities. Neither publication of this notice nor the inclusion or omission of information in the summary is intended to affect the legal status of any petition or its final disposition.

DATES: Comments on petitions received must identify the petition docket number involved and must be received on or before February 6, 2002.

ADDRESSES: Send comments on any petition to the Docket Management System, U.S. Department of Transportation, Room Plaza 401, 400 Seventh Street, SW., Washington, DC 20590–0001. You must identify the docket number FAA–2002–11355 at the beginning of your comments. If you wish to receive confirmation that FAA received your comments, include a self-addressed, stamped postcard.

You may also submit comments through the Internet to *http://dms.dot.gov.* You may review the public docket containing the petition, any comments received, and any final disposition in person in the Dockets Office between 9 a.m. and 5 p.m., Monday through Friday, except Federal holidays. The Dockets Office (telephone 1–800–647–5527) is on the plaza level of the NASSIF Building at the Department of Transportation at the above address. Also, you may review public dockets on the Internet at http://dms.dot.gov.

FOR FURTHER INFORMATION CONTACT: Denise Emrick (202) 267–5174, Office of Rulemaking (ARM–1), Federal Aviation Administration, 800 Independence Avenue, SW., Washington, DC 20591.

This notice is published pursuant to 14 CFR 11.85 and 11.91.

Issued in Washington, DC, on January 29, 2002.

Donald P. Byrne,

Assistant Chief Counsel for Regulations.

Petitions for Exemption

Docket No.: FAA–2002–11355.

Petitioner: Embry-Riddle Aeronautical University.

Section of 14 CFR Affected: 14 CFR 61.71(a).

Description of Relief Sought: To permit Embry-Riddle to consider two students to have met the aeronautical experience, aeronautical knowledge, and areas of operation requirements of part 61 although the students were not able to pass the practical test within 60 days of graduation due to September 11, 2001, flight restrictions.

[FR Doc. 02–2542 Filed 1–31–02; 8:45 am]

BILLING CODE 4910–13–M

DEPARTMENT OF TRANSPORTATION

Federal Aviation Administration

Request for Comment on Proposed Designated Alteration Station Program Limitations

AGENCY: Federal Aviation Administration, DOT

ACTION: Notice of availability and request for comments.

SUMMARY: The Federal Aviation Administration requests public comment on its intent to manage more closely certain Designated Alteration Station (DAS) activities, specifically off-site DAS prototype installations. The intended guidance also documents the roles and responsibilities of parties involved in the DAS Supplemental Type Certification (STC) process. It is written for the Aircraft Certification (AIR) and Flight Standards (AFS) Services and companies authorized as Designated Alteration Stations (DAS).

DATES: Comments must be received on or before March 4, 2002.

ADDRESSES: Comments on this proposal should be mailed or delivered in duplicate to Ralph Meyer, Delegation and Airworthiness Programs Branch, AIR–140, Aircraft Certification Service, Federal Aviation Administration, P.O. Box 25082, Oklahoma City, OK 73125.

FOR FURTHER INFORMATION CONTACT: Ralph Meyer, telephone (405) 954–7072. Or, you may send an e-mail to *ralph.meyer@faa.gov.*

SUPPLEMENTARY INFORMATION:

Comments Invited

The proposed notice will be available on the World Wide Web at *http://av-info.faa.gov/dst/dasnotice.htm.* Interested persons may comment on it by submitting written data, views or arguments. Commentors must identify the proposed notice by subject, and submit comments to the address specified above. The FAA will consider all communications received on or before the closing date for comments.

Discussion

Background and discussion of the proposed policy are provided in the draft notice. Comments should identify the following:

(1) The impact on existing DAS business, including identification of typical STC projects that could not be performed, and changes to business practices that would be necessary under this proposal.

(2) The need for clarification of any portion of this proposal.

(3) Suggested additions or alternatives to this proposal that, in the commentator's opinion, would meet the intent of the policy.

Issued in Washington, DC on January 7, 2002.

Ronald T. Wojnar,

Acting Director, Aircraft Certification Service.

[FR Doc. 02–2540 Filed 1–31–02; 8:45 am]

BILLING CODE 4910–13–M

DEPARTMENT OF TRANSPORTATION

Surface Transportation Board

[STB Ex Parte No. 290 (Sub No. 4)]

Railroad Cost Recovery Procedures—Productivity Adjustment

AGENCY: Surface Transportation Board.

ACTION: Proposed adoption of a Railroad Cost Recovery Procedures productivity adjustment.

SUMMARY: The Surface Transportation Board proposes to adopt 1.042 (4.2%) as the measure of average change in railroad productivity for the 1996–2000 (5-year) period. The current value of 2.8% was developed for the 1995 to 1999 period.

DATES: Comments are due by February 16, 2002.

EFFECTIVE DATE: The proposed productivity adjustment is effective 30 days after the date of service.

ADDRESSES: Send comments (an original and 10 copies) referring to STB Ex Parte No. 290 (Sub-No. 4) to: Office of the Secretary, Case Control Branch, 1925 K Street, NW, Washington, DC 20423–0001. Parties should submit all pleading and attachments on a 3.5-inch diskette in WordPerfect 6.0 or 6.1 compatible format.

FOR FURTHER INFORMATION CONTACT: H. Jeff Warren, (202) 565–1533. Federal Information Relay Service (FIRS) for the hearing impaired: 1–800–877–8339.

SUPPLEMENTARY INFORMATION: Additional information is contained in the Board's decision, which is available on our Web site, *www.stb.dot.gov*. To purchase a copy of the full decision, write to, call, or pick up in person from the Board's contractor, Dã-To-Dã Legal, Suite 405, 1925 K Street, NW, Washington, DC 20006, phone (202) 293–7776. [Assistance for the hearing impaired is available through FIRS: 1–800–877–8339.]

This action will not significantly affect either the quality of the human environment or energy conservation.

Pursuant to 5 U.S.C. 605(b), we conclude that our action will not have a significant economic impact on a substantial number of small entities within the meaning of the Regulatory Flexibility Act.

Decided: January 25, 2002.

By the Board, Chairman Morgan, Vice Chairman Burkes.

Vernon A. Williams,

Secretary.

[FR Doc. 02–2521 Filed 1–31–02; 8:45 am]

BILLING CODE 4915–00–P

DEPARTMENT OF THE TREASURY

Fiscal Service

Application and Renewal Fees Imposed on Surety Companies and Reinsuring Companies; Change in Fees Imposed

AGENCY: Financial Management Service, Fiscal Service, Department of the Treasury.

ACTION: Application and renewal fees imposed on surety companies and reinsuring companies; change in fees imposed

SUMMARY: Effective December 31, 2001, the Department of the Treasury, Financial Management Service, is changing the fees it imposes on and collects from surety companies and reinsuring companies.

FOR FURTHER INFORMATION CONTACT: Surety Bond Branch (202) 874–6765.

SUPPLEMENTARY INFORMATION: The fees imposed and collected, as referred to in 31 CFR 223.22, cover the costs incurred by the Government for services performed relative to qualifying corporate sureties to write Federal business. These fees are determined in accordance with the Office of Management and Budget Circular A–25, as amended. The change in fees is the result of a thorough analysis of costs associated with the Surety Bond Branch.

The new fee rate schedule is as follows:

(1) Examination of a company's application for a Certificate of Authority as an acceptable surety or as an acceptable reinsuring company on Federal bonds—$4,705.

(2) Determination of a company's continued qualification for annual renewal of its Certificate of Authority—$2,755.

(3) Examination of a company's application for recognition as an Admitted Reinsurer (except on excess risks running to the United States)—$1,665.

(4) Determination of a company's continued qualification for annual renewal of its authority as an Admitted Reinsurer—$1,175.

Questions concerning this notice should be directed to the Surety Bond Branch, Financial Accounting and Services Division, Financial Management Service, Department of the Treasury, Hyattsville, MD 20782, Telephone (202) 874–6850.

Dated: January 24, 2002.

Wanda J. Rogers,

Acting Assistant Commissioner, Financial Operations, Financial Management Service.

[FR Doc. 02–2502 Filed 1–31–02; 8:45 am]

BILLING CODE 4810–35–M

DEPARTMENT OF THE TREASURY

Internal Revenue Service

Proposed Collection; Comment Request for Form 8050

AGENCY: Internal Revenue Service (IRS), Treasury.

ACTION: Notice and request for comments.

SUMMARY: The Department of the Treasury, as part of its continuing effort to reduce paperwork and respondent burden, invites the general public and other Federal agencies to take this opportunity to comment on proposed and/or continuing information collections, as required by the Paperwork Reduction Act of 1995, Public Law 104–13 (44 U.S.C. 3506(c)(2)(A)). Currently, the IRS is soliciting comments concerning Form 8050, Direct Deposit of Corporate Tax Refund.

DATES: Written comments should be received on or before April 2, 2002, to be assured of consideration.

ADDRESSES: Direct all written comments to George Freeland, Internal Revenue Service, room 5577, 1111 Constitution Avenue NW., Washington, DC 20224.

FOR FURTHER INFORMATION CONTACT: Requests for additional information or copies of the form and instructions should be directed to Carol Savage, (202) 622–3945, or through the internet (*CAROL.A.SAVAGE@irs.gov.*), Internal Revenue Service, room 5242, 1111 Constitution Avenue NW., Washington, DC 20224.

SUPPLEMENTARY INFORMATION:

Title: Direct Deposit of Corporate Tax Refund.

OMB Number: 1545–1762.

Form Number: 8050.

Abstract: Form 8050 is used to request that the IRS deposit a tax refund of ($1 million or more) directly into an account at any U.S. bank or other financial institution (such as a mutual fund, credit union, or brokerage firm) that accepts direct deposits.

Current Actions: There are no changes being made to the form at this time.

Type of Review: Extension of a currently approved collection.

Affected Public: Business or other for-profit organizations, and individuals or households.

Estimated Number of Respondents: 210,000.

Estimated Time Per Respondent: 1 hour, 40 minutes.

Estimated Total Annual Burden Hours: 348,600.

The following paragraph applies to all of the collections of information covered by this notice: An agency may not conduct or sponsor, and a person is not required to respond to, a collection of information unless the collection of information displays a valid OMB control number. Books or records relating to a collection of information must be retained as long as their contents may become material in the administration of any internal revenue law. Generally, tax returns and tax return information are confidential, as required by 26 U.S.C. 6103.

Request for Comments

Comments submitted in response to this notice will be summarized and/or included in the request for OMB approval. All comments will become a matter of public record. Comments are invited on: (a) Whether the collection of information is necessary for the proper performance of the functions of the agency, including whether the information shall have practical utility; (b) the accuracy of the agency's estimate of the burden of the collection of information; (c) ways to enhance the quality, utility, and clarity of the information to be collected; (d) ways to

minimize the burden of the collection of information on respondents, including through the use of automated collection techniques or other forms of information technology; and (e) estimates of capital or start-up costs and costs of operation, maintenance, and purchase of services to provide information.

Approved: January 28, 2002.

George Freeland,

IRS Reports Clearance Officer.

[FR Doc. 02–2534 Filed 1–31–02; 8:45 am]

BILLING CODE 4830–01–P

DEPARTMENT OF THE TREASURY

Internal Revenue Service

Proposed Collection; Comment Request for Revenue Procedure 2002–15

AGENCY: Internal Revenue Service (IRS), Treasury.

ACTION: Notice and request for comments.

SUMMARY: The Department of the Treasury, as part of its continuing effort to reduce paperwork and respondent burden, invites the general public and other Federal agencies to take this opportunity to comment on proposed and/or continuing information collections, as required by the Paperwork Reduction Act of 1995, Public Law 104–13 (44 U.S.C. 3506(c)(2)(A)). Currently, the IRS is soliciting comments concerning Revenue Procedure 2002–15, Automatic Relief for Late Initial Entity Classification Elections—Check the Box.

DATES: Written comments should be received on or before April 2, 2002, to be assured of consideration.

ADDRESSES: Direct all written comments to George Freeland, Internal Revenue Service, room 5577, 1111 Constitution Avenue NW., Washington, DC 20224.

FOR FURTHER INFORMATION CONTACT: Requests for additional information or copies of the revenue procedure should be directed to Carol Savage, (202) 622–3945, or through the internet *(CAROL.A.SAVAGE@irs.gov.),* Internal Revenue Service, room 5242, 1111 Constitution Avenue NW., Washington, DC 20224.

SUPPLEMENTARY INFORMATION:

Title: Automatic Relief for Late Initial Entity Classification Elections—Check the Box.

OMB Number: 1545–1771.

Revenue Procedure Number: Revenue Procedure 2002–15.

Abstract: Revenue Procedure 2002–15 provides that, in certain circumstances, taxpayers whose initial entity classification election was filed late can obtain relief by filing Form 8832 and attaching a statement explaining that the requirements of the revenue procedure have been met.

Current Actions: There are no changes being made to the revenue procedure at this time.

Type of Review: Extension of a currently approved collection.

Affected Public: Business or other for-profit organizations.

Estimated Number of Respondents: 100.

Estimated Time Per Respondent: 1 hour.

Estimated Total Annual Burden Hours: 100.

The following paragraph applies to all of the collections of information covered by this notice:

An agency may not conduct or sponsor, and a person is not required to respond to, a collection of information unless the collection of information displays a valid OMB control number. Books or records relating to a collection of information must be retained as long as their contents may become material in the administration of any internal revenue law. Generally, tax returns and tax return information are confidential, as required by 26 U.S.C. 6103.

Request for Comments

Comments submitted in response to this notice will be summarized and/or included in the request for OMB approval. All comments will become a matter of public record. Comments are invited on: (a) Whether the collection of information is necessary for the proper performance of the functions of the agency, including whether the information shall have practical utility; (b) the accuracy of the agency's estimate of the burden of the collection of information; (c) ways to enhance the quality, utility, and clarity of the information to be collected; (d) ways to minimize the burden of the collection of information on respondents, including through the use of automated collection techniques or other forms of information technology; and (e) estimates of capital or start-up costs and costs of operation, maintenance, and purchase of services to provide information.

Approved: January 28, 2002.

George Freeland,

IRS Reports Clearance Officer.

[FR Doc. 02–2535 Filed 1–31–02; 8:45 am]

BILLING CODE 4830–01–P

Notices

Federal Register
Vol. 67, No. 22
Friday, February 1, 2002

This section of the FEDERAL REGISTER contains documents other than rules or proposed rules that are applicable to the public. Notices of hearings and investigations, committee meetings, agency decisions and rulings, delegations of authority, filing of petitions and applications and agency statements of organization and functions are examples of documents appearing in this section.

DEPARTMENT OF AGRICULTURE

Rural Telephone Bank

Sunshine Act Meeting Notice

AGENCY: Rural Telephone Bank, USDA.

ACTION: Staff briefing for the Board of Directors.

TIME AND DATE: 2 p.m., Monday, February 11, 2002.

PLACE: Conference Room 304, Anaheim Marriott Hotel, 700 West Convention Way, Anaheim, CA.

STATUS: Open.

MATTERS TO BE DISCUSSED:

1. Progress report from business advisor.
2. November 2002 board of directors election.
3. Amendment to Affidavit of Lost Shares.
4. Current telecommunications industry issues.
5. Administrative issues.

ACTION: Board of Directors Meeting.

TIME AND DATE: 9 a.m., Tuesday, February 12, 2002.

PLACE: Conference Room Gold Key II, Anaheim Marriott Hotel, 700 West Convention Way, Anaheim, CA.

STATUS: Open.

MATTERS TO BE CONSIDERED:

The following matters have been placed on the agenda for the Board of Directors meeting:

1. Call to order.
2. Action on Minutes of the November 9, 2001, board meeting.
3. Secretary's Report on loans approved.
4. Treasurer's Report.
5. Privatization Committee Report.
6. Consideration of resolution to adopt a schedule for various actions concerning the November 2002 board of directors election.
7. Consideration of resolution to appoint Tellers for the November 2002 board of directors election.
8. Consideration of resolution to amend the Affidavit of Lost Shares.
9. Adjournment.

CONTACT PERSON FOR MORE INFORMATION: Roberta D. Purcell, Assistant Governor, Rural Telephone Bank, (202) 720–9554.

Dated: January 29, 2002.

Hilda Gay Legg,

Governor, Rural Telephone Bank.

[FR Doc. 02–2605 Filed 1–30–02; 12:19 pm]

BILLING CODE 3410–15–P

ARCHITECTURAL AND TRANSPORTATION BARRIERS COMPLIANCE BOARD

Public Rights-of-Way Access Advisory Committee; Meeting

AGENCY: Architectural and Transportation Barriers Compliance Board.

ACTION: Notice of meeting.

SUMMARY: The Architectural and Transportation Barriers Compliance Board (Access Board) established a Public Rights-of-Way Access Advisory Committee (Committee) to assist the Board in developing a proposed rule on accessibility guidelines for newly constructed and altered public rights-of-way covered by the Americans with Disabilities Act of 1990 and the Architectural Barriers Act of 1968. This document announces the next meeting of the technical assistance sub-committee of that Committee, which will be open to the public.

DATES: The meeting of the sub-committee is scheduled for February 20 and 21, 2002, beginning at 9 a.m. and ending at 5 p.m. each day.

ADDRESSES: The meeting will be held at the Marriott City Center Hotel, 520 Southwest Broadway, Portland, Oregon 97205.

FOR FURTHER INFORMATION CONTACT: Scott Windley, Office of Technical and Information Services, Architectural and Transportation Barriers Compliance Board, 1331 F Street, NW., suite 1000, Washington, DC, 20004–1111. Telephone number (202) 272–5434 extension 125 (Voice); (202) 272–5449 (TTY). E-mail *windley@access-board.gov.* This document is available in alternate formats (cassette tape, Braille, large print, or ASCII disk) upon request. This document is also available on the Board's Internet site, *http://www.access-board.gov/prowmtg.htm.*

SUPPLEMENTARY INFORMATION: On October 20, 1999, the Architectural and Transportation Barriers Compliance Board (Access Board) published a notice appointing members to a Public Rights-of-Way Access Advisory Committee (Committee). 64 FR 56482 (October 20, 1999). The objectives of the Committee include providing recommendations for developing a proposed rule addressing accessibility guidelines for newly constructed and altered public rights-of-way covered by the Americans with Disabilities Act of 1990 and the Architectural Barriers Act of 1968, recommendations regarding technical assistance issues, and guidance for best practices for alterations in the public rights-of-way.

On January 10, 2001, the Committee presented its recommendations on accessible public rights-of-way in a report entitled ''Building a True Community''. The report is available on the Access Board's Web site at *www.access-board.gov* or can be ordered by calling the Access Board at (800) 872–2253 (voice) or (800) 993–2822 (TTY).

At its February meeting, the technical assistance sub-committee will continue to address the development and format of technical assistance materials relating to public rights-of-way. The sub-committee meeting will be open to the public and interested persons can attend the meeting and communicate their views. Members of the public will have an opportunity to address the sub-committee on issues of interest to them and the sub-committee during the public comment period at the beginning of each meeting day. Members of the public may participate on subcommittees of the Committee. Additionally, all interested persons will have the opportunity to comment when the proposed accessibility guidelines for public rights-of-way are issued in the **Federal Register** by the Access Board.

Individuals who require sign language interpreters or real-time captioning systems should contact Scott Windley by February 12, 2002. Notices of future

meetings will be published in the **Federal Register**.

Lawrence W. Roffee,

Executive Director.

[FR Doc. 02–2520 Filed 1–31–02; 8:45 am]

BILLING CODE 8150–01–P

COMMITTEE FOR PURCHASE FROM PEOPLE WHO ARE BLIND OR SEVERELY DISABLED

Agency Information Collection Activities Proposed Information Collection; Comment Request

ACTION: Submission for OMB review; comment request.

AGENCY: Committee for Purchase from People Who Are Blind or Severely Disabled.

SUMMARY: The Committee has submitted to the Office of Management and Budget for their review the following collection as required by the Paperwork Reduction Act (44 U.S.C. chapter 35).

Committee Form 401—Initial Certification—Qualified Nonprofit Agency Serving People Who Are Blind

Committee From 402—Initial Certification—Qualified Nonprofit Agency Serving People Who Are Severely Disabled

DATES: Interested persons are invited to submit comments about the collection on or before March 4, 2002.

ADDRESSES: Written comments should be addressed to the Office of Information and Regulatory Affairs, Attention: Lauren Wittenberg, Desk Officer, Office of Management and Budget, 725 17th Street, NW., Room 10202, New Executive Office Building, Washington, DC 20503 or be electronically e-mailed to *Lauren_Wittenbreg@omb.eop.gov.* Requests for copies of documents pertaining to the collection should be addressed to Committee for Purchase From People Who Are Blind or Severely Disabled, Attention: Janet Yandik, Information Management Specialist, Jefferson Plaza 2, Suite 10800, 1421 Jefferson Davis Highway, Arlington, VA 22202–3259 or e-mailed to *jyandik@jwod.gov.*

SUPPLEMENTARY INFORMATION: The Committee has two initial certification forms, one for nonprofit agencies serving people who are blind and one for nonprofit agencies primarily serving people who have other severe disabilities. The information included on the forms is required to ensure that nonprofit agencies requesting to participate in the Committee's program meet the requirements of the Javits-Wagner-O'Day Act (JWOD), 41 USC 46–48c.

Title: Initial Certification—Qualified Nonprofit Agency Serving People Who Are Blind, Committee Form 401

OMB Number: 3037–0004.

Agency Number: 3037.

Frequency: 1 time.

Affected Public: Nonprofit agencies serving people who are blind seeking to participate in the JWOD program.

Number of Respondents: 5.

Estimated Time Per Respondent: 1 hour.

Total Burden Hours: 5.

Total Annual Costs: $0.

Title: Initial Certification—Qualified Nonprofit Agency Serving People Who Are Severely Disabled, Committee Form 402.

OMB Number: 3037–0003.

Agency Number: 3037.

Frequency: 1 time.

Affected Public: Nonprofit agencies serving people who are severely disabled seeking to participate in the JWOD program.

Number of Respondents: 50

Estimated Time Per Respondent: 1 hour.

Total Burden Hours: 50.

Total Annual Costs: $0.

Sheryl D. Kennerly,

Director, Information Management.

[FR Doc. 02–2518 Filed 1–31–02; 8:45 am]

BILLING CODE 6353–01–P

COMMITTEE FOR PURCHASE FROM PEOPLE WHO ARE BLIND OR SEVERELY DISABLED

Procurement List Proposed Additions

AGENCY: Committee for Purchase From People Who Are Blind or Severely Disabled.

ACTION: Proposed additions to procurement list.

SUMMARY: The Committee is proposing to add to the Procurement List services to be furnished by nonprofit agencies employing persons who are blind or have other severe disabilities.

Comments Must be Received On or Before: March 4, 2002.

ADDRESSES: Committee for Purchase From People Who Are Blind or Severely Disabled, Jefferson Plaza 2, Suite 10800, 1421 Jefferson Davis Highway, Arlington, Virginia 22202–3259.

FOR FURTHER INFORMATION CONTACT: Sheryl D. Kennerly, (703) 603–7740.

SUPPLEMENTARY INFORMATION: This notice is published pursuant to 41 U.S.C 47(a)(2) and 41 CFR 51–2.3. Its purpose is to provide interested persons an opportunity to submit comments on the possible impact of the proposed actions.

If the Committee approves the proposed additions, the entities of the Federal Government identified in this notice will be required to procure the services listed below from nonprofit agencies employing persons who are blind or have other severe disabilities.

I certify that the following action will not have a significant impact on a substantial number of small entities. The major factors considered for this certification were:

1. The action will not result in any additional reporting, recordkeeping or other compliance requirements for small entities other than the small organizations that will furnish the services to the Government.

2. The action will result in authorizing small entities to furnish the services to the Government.

3. There are no known regulatory alternatives which would accomplish the objectives of the Javits-Wagner-O'Day Act (41 U.S.C. 46–48c) in connection with the services proposed for addition to the Procurement List. Comments on this certification are invited. Commenters should identify the statement(s) underlying the certification on which they are providing additional information.

The following services are proposed for addition to Procurement List for production by the nonprofit agencies listed:

Services

Service Type/Location: Administrative Support Services, GSA Public Buildings Service Atlanta PMC, Atlanta, Georgia.

Nonprofit Agency: Blind & Low Vision Services of North Georgia, Smyrna, Georgia.

Contract Activity: GSA, Public Buildings Service.

Service Type/Location: Commercial Facility Management, Ronald Reagan Building, Washington, DC.

Nonprofit Agency: The Chimes, Inc., Baltimore, Maryland.

Contract Activity: GSA Public Buildings Service.

Service Type/Location: Facilities Maintenance Services, U.S. Courthouse and Federal Office Building, Central Islip, New York.

Nonprofit Agency: The Corporate Source, Inc., New York, New York.

Contract Activity: GSA, Public Buildings Service.

Service Type/Location: Mailroom Operation, Internal Revenue Service-US Mint Headquarters, Washington, DC.

Nonprofit Agency: ServiceSource, Inc., Alexandria, VA.

Contract Activity: Internal Revenue Services.

Sheryl D. Kennerly,

Director, Information Management.

[FR Doc. 02–2516 Filed 1–31–02; 8:45 am]

BILLING CODE 6353–01–P

COMMITTEE FOR PURCHASE FROM PEOPLE WHO ARE BLIND OR SEVERELY DISABLED

Procurement List; Additions and Deletions

AGENCY: Committee for Purchase from People Who Are Blind or Severely Disabled.

ACTION: Additions to and Deletions from Procurement List.

SUMMARY: This action adds to the Procurement List services to be furnished by nonprofit agencies employing persons who are blind or have other severe disabilities, and deletes from the Procurement List products previously furnished by such agencies.

EFFECTIVE DATE: March 4, 2002.

ADDRESSES: Committee for Purchase From People Who Are Blind or Severely Disabled, Jefferson Plaza 2, Suite 10800, 1421 Jefferson Davis Highway, Arlington, Virginia 22202–3259.

FOR FURTHER INFORMATION CONTACT: Sheryl D. Kennerly (703) 603–7740

SUPPLEMENTARY INFORMATION: On November 16, November 30, and December 21, 2001, the Committee for Purchase From People Who Are Blind or Severely Disabled published notices (66 FR 57703, 59778 and 65876) of proposed additions to and deletions from the Procurement List:

Additions

After consideration of the material presented to it concerning capability of qualified nonprofit agencies to provide the services and impact of the additions on the current or most recent contractors, the Committee has determined that the services listed below are suitable for procurement by the Federal Government under 41 U.S.C. 46–48c and 41 CFR 51–2.4.

I certify that the following action will not have a significant impact on a substantial number of small entities. The major factors considered for this certification were:

1. The action will not result in any additional reporting, recordkeeping or other compliance requirements for small entities other than the small organizations that will furnish the services to the Government.

2. The action will not have a severe economic impact on current contractors for the services.

3. The action will result in authorizing small entities to furnish the services to the Government.

4. There are no known regulatory alternatives which would accomplish the objectives of the Javits-Wagner-O'Day Act (41 U.S.C. 46–48c) in connection with the services proposed for addition to the Procurement List.

Accordingly, the following services are added to the Procurement List.

Services

Service Type/Location: Administrative Services, US Attorney's Office-Atlanta, DOJ, 1800 US Courthouse, 75 Spring Street, Atlanta, Georgia
Contracting Activity: US Attorney's Office-Atlanta, DOJ, Atlanta, Georgia
Service Type/Location: Food Service Attendant, 174th FW/LGC, NYANG, Hancock Field, Syracuse, New York
Contracting Activity: New York Air National Guard, Syracuse, New York
Service Type/Location: Janitorial/Custodial, VA Primary Care Clinic, McHenry, Illinois
Contracting Activity: Department of Veterans Affairs, Milwaukee, Wisconsin

Deletions

I certify that the following action will not have a significant impact on a substantial number of small entities. The major factors considered for this certification were:

1. The action may not result in any additional reporting, recordkeeping or other compliance requirements for small entities.

2. The action will not have a severe economic impact on future contractors for the commodities.

3. The action will result in authorizing small entities to furnish the commodities to Government.

4. There are no known regulatory alternatives which would accomplish the objectives of the Javits-Wagner-O'Day Act (41 U.S.C. 46–48c) in connection with the products deleted from the Procurement List.

After consideration of the relevant matter presented, the committee has determined that the commodities listed below are no longer suitable for procurement by the Federal Government under 41 U.S.C. 46–48c and 41 CFR 51–2.4.

Accordingly, the following commodities are deleted from the Procurement List:

Commodities

Commodity/NSN: Calendar Pad
7510–01–450–5452
Commodity/NSN: Executive/Personal Time Management System
7530–01–458–3130
7530–01–458–3131
7510–01–458–3132
7510–01–458–3133
7530–01–458–3135
7530–01–458–3136
7510–01–458–3137
7510–01–458–3138
7530–01–458–3139
7510–01–458–3141
7530–01–458–3142
7530–01–458–3143
7530–01–458–3145
7530–01–458–3146
7510–01–458–3147
7510–01–458–3150
7530–01–458–3152
7530–01–458–3154
7530–01–458–3159
7530–01–458–3161
7530–01–458–3164
Commodity/NSN: Refill, Appointment Book
7530–01–450–5406

Sheryl D Kennerly,

Director, Information Management.

[FR Doc. 02–2517 Filed 1–31–02; 8:45 am]

BILLING CODE 6353–01–P

DEPARTMENT OF COMMERCE

International Trade Administration

Antidumping or Countervailing Duty Order, Finding, or Suspended Investigation; Opportunity To Request Administrative Review

AGENCY: Import Administration, International Trade Administration, Department of Commerce.

ACTION: Notice of opportunity to request administrative review of antidumping or countervailing duty order, finding, or suspended investigation.

Background

Each year during the anniversary month of the publication of an antidumping or countervailing duty order, finding, or suspension of investigation, an interested party, as defined in section 771(9) of the Tariff Act of 1930, as amended (the Act), may request, in accordance with section 351.213(2001) of the Department of Commerce (the Department) Regulations, that the Department conduct an administrative review of that antidumping or countervailing duty order, finding, or suspended investigation.

Opportunity To Request a Review

Not later than the last day of February 2002, interested parties may request administrative review of the following orders, findings, or suspended investigations, with anniversary dates in February for the following periods:

Antidumping duty proceedings

	Period
Antidumpting Duty Proceedings	
Brazil: Stainless Steel Bar, A–351–825	2/1/01–1/31/02
France: Certain Cut-to-Length Carbon-Quality Steel Plate, A–427–816	2/1/01–1/31/02
Germany: Sodium Thiosulfate, A–428–807	2/1/01–1/31/02
India:	
Certain Cut-to-Length Carbon-Quality Steel Plate, A–533–817	2/1/01–1/31/02
Forged Stainless Steel Flanges, A–533–809	2/1/01–1/31/02
Stainless Steel Bar, A–533–810	2/1/01–1/31/02
Certain Preserved Mushrooms, A–533–813	2/1/01–1/31/02
Indonesia:	
Certain Cut-to-Length Carbon-Quality Steel Plate, A–560–805	2/1/01–1/31/02
Certain Preserved Mushrooms, A–560–802	2/1/01–1/31/02
Melamine Institutional Dinnerware, A–560–801	2/1/01–1/31/02
Italy:	
Certain Cut-to-Length Carbon-Quality Steel Plate, A–475–826	2/1/01–1/31/02
Stainless Steel Butt-Weld Pipe Fittings, A–475–828	8/2/00–1/31/02
Japan:	
Carbon Steel Butt-Weld Pipe Fittings, A–588–602	2/1/01–1/31/02
Certain Cut-to-Length Carbon-Quality Steel Plate, A–588–847	2/1/01–1/31/02
Mechanical Transfer Presses, A–588–810	2/1/01–1/31/02
Melamine In Crystal Form, A–588–056	2/1/01–1/31/02
Stainless Steel Bar, A–588–833	2/1/01–1/31/02
Malaysia: Stainless Steel Butt-Weld Pipe Fittings, A–557–809	12/27/00–1/31/02
Philippines: Stainless Steel Butt-Weld Pipe Fittings, A–565–801	8/2/00–1/31/02
Republic of Korea:	
Certain Cut-to-Length Carbon-Quality Steel Plate, A–580–836	2/1/01–1/31/02
Stainless Steel Butt-Weld Pipe Fittings, A–580–813	2/1/01–1/31/02
Taiwan:	
Forged Stainless Steel Flanges, A–583–821	2/1/01–1/31/02
Melamine Institutional Dinnerware, A–583–825	2/1/01–1/31/02
The People's Republic of China:	
Axes/adzes A–570–803	2/1/01–1/31/02
Bars/wedges, A–570–803	2/1/01–1/31/02
Certain Preserved Mushrooms, A–570–851	2/1/01–1/31/02
Coumarin, A–570–830	2/1/01–1/31/02
Creatine Monohydrate, A–570–852	2/1/01–1/31/02
Hammers/sledges, A–570–803	2/1/01–1/31/02
Melamine Instituional Dinnerware, A–570–844	2/1/01–1/31/02
Natural Bristle Paint Brushes, A–570–501	2/1/01–1/31/02
Picks/mattocks, A–570–803	2/1/01–1/31/02
Sodium Thiosulfate, A–570–805	2/1/01–1/31/02
The United Kingdom: Sodium Thiosulfate, A–412–805	2/1/01–1/31/02
Countervailing Duty Proceedings	
France: Certain Cut-to Length Carbon Quality Steel Plate, C–427–817	1/1/01–12/31/01
India: Certain Cut-to-Length Carbon-Quality Steel Plate, A–533–818	1/1/01–12/31/01
Indonesia: Certain Cut-to-Length Carbon-Quality Steel Plate, A–560–806	1/1/01–12/31/01
Italy: Certain Cut-to-Length Carbon-Quality Steel Plate, A–475–827	1/1/01–12/31/01
Republic of Korea: Certain Cut-to-Length Carbon-Quality Steel Plate, C–580–837	1/1/01–12/31/01
Suspension Agreements	
None	

In accordance with section 351.213(b) of the regulations, an interested party as defined by section 771(9) of the Act, may request in writing that the Secretary conduct an administrative review. For both antidumping and countervailing duty reviews, the interested party must specify the individual producers or exporters covered by an antidumping finding or an antidumping or countervailing duty order or suspension agreement for which it is requesting a review, and the requesting party must state why it desires the Secretary to review those particular producers or exporters. If the interested party intends for the Secretary to review sales of merchandise by an exporter (or a producer if that producer also exports merchandise from other suppliers) which were produced in more than one country of origin and each country of origin is subject to a separate order, then the interested party must state specifically, on an order-by-order basis, which exporter(s) the request is intended to cover.

Six copies of the request should be submitted to the Assistant Secretary for Import Administration, International Trade Administration, Room 1870, U.S. Department of Commerce, 14th Street & Constitution Avenue, NW., Washington, DC 20230. The Department also asks parties to serve a copy of their requests to the Office of Antidumping/Countervailing Enforcement, Attention: Sheila Forbes, in room 3065 of the main

Commerce Building. Further, in accordance with section 351.303(f)(l)(i) of the regulations, a copy of each request must be served on every party on the Department's service list.

The Department will publish in the **Federal Register** a notice of ''Initiation of Administrative Review of Antidumping or Countervailing Duty Order, Finding, or Suspended Investigation'' for requests received by the last day of February 2002. If the Department does not receive, by the last day of February 2002, a request for review of entries covered by an order, finding, or suspended investigation listed in this notice and for the period identified above, the Department will instruct the Customs Service to assess antidumping or countervailing duties on those entries at a rate equal to the cash deposit of (or bond for) estimated antidumping or countervailing duties required on those entries at the time of entry, or withdrawal from warehouse, for consumption and to continue to collect the cash deposit previously ordered.

This notice is not required by statute but is published as a service to the international trading community.

Dated: January 24, 2002.

Holly A. Kuga,

Senior Office Director, Group II, Office 4, Import Administration.

[FR Doc. 02–2525 Filed 1–31–02; 8:45 am]

BILLING CODE 3510–DS–P

DEPARTMENT OF COMMERCE

National Oceanic and Atmospheric Administration

[I.D. 012802A]

Mid-Atlantic Fishery Management Council; Public Meeting

AGENCY: National Marine Fisheries Service (NMFS), National Oceanic and Atmospheric Administration (NOAA), Commerce.

ACTION: Notice of public meeting.

SUMMARY: The Mid-Atlantic Fishery Management Council's (MAFMC) Demersal Species Committee and the Atlantic States Marine Fisheries Commission's (ASMFC) Summer Flounder, Scup, and Black Sea Bass Board will hold a public meeting.

DATES: The meeting will be held on Thursday, February 21, 2002, from 4 pm to 6 p.m.

ADDRESSES: This meeting will be held at the Swiss Hotel Washington, The Watergate, 2650 Virginia Avenue, NW, Washington, DC; telephone: 202–965–2300.

Council address: Mid-Atlantic Fishery Management Council, Room 2115, 300 S. New Street, Dover, DE 19904.

FOR FURTHER INFORMATION CONTACT: Daniel T. Furlong, Executive Director, Mid-Atlantic Fishery Management Council; telephone: 302–674–2331, ext. 19.

SUPPLEMENTARY INFORMATION: The purpose of this meeting is to discuss demersal species priorities for 2002 and beyond.

Although non-emergency issues not contained in this agenda may come before this group for discussion, those issues may not be the subject of formal action during this meeting. Action will be restricted to those issues specifically identified in this notice and any issues arising after publication of this notice that require emergency action under section 305(c) of the Magnuson-Stevens Fishery Conservation and Management Act, provided the public has been notified of the Council's intent to take final action to address the emergency.

Special Accommodations

This meeting is physically accessible to people with disabilities. Requests for sign language interpretation or other auxiliary aids should be directed to Joanna Davis at the Mid-Atlantic Council Office (see **ADDRESSES**) at least 5 days prior to the meeting date.

Dated: January 28, 2002.

Richard W. Surdi,

Acting Director, Office of Sustainable Fisheries, National Marine Fisheries Service.

[FR Doc. 02–2530 Filed 1–31–02; 8:45 am]

BILLING CODE 3510–22–S

DEPARTMENT OF COMMERCE

National Oceanic and Atmospheric Administration

[I.D. 012402E]

Pacific Fishery Management Council; Public Meeting

AGENCY: National Marine Fisheries Service (NMFS), National Oceanic and Atmospheric Administration (NOAA), Commerce.

ACTION: Notice of public meeting.

SUMMARY: The Groundfish Stock Assessment Review (STAR) Panel for Pacific whiting will hold a work session which is open to the public.

DATES: The Pacific whiting Stock Assessment Review Panel will meet beginning at 1 p.m., February 20, 2002. The meeting will continue on February 21, 2002 beginning at 8 a.m. through February 22, 2002. The meetings will end at 5 p.m. each day, or as necessary to complete business.

ADDRESSES: The Pacific whiting Stock Assessment Review Panel meeting will be held at NMFS Northwest Fisheries Science Center, 2725 Montlake Blvd. E, Seattle, WA 98112; 206–860–3200. The meeting will convene in room 438E on February 20, 2002 and in room 370W on February 21 and 22, 2002.

Council address: Pacific Fishery Management Council, 7700 NE Ambassador Place, Suite 200, Portland, OR 97220–1384.

FOR FURTHER INFORMATION CONTACT: Mr. Chuck Tracy, Staff Officer; 503–326–6352.

SUPPLEMENTARY INFORMATION: The purpose of the meeting is to review draft stock assessment documents and any other pertinent information, work with the Stock Assessment Team to make necessary revisions, and produce a STAR Panel report for use by the Council family and other interested persons.

Entry to the Northwest Fisheries Science Center requires identification with photograph (such as a student ID, state drivers license, etc.) A security guard will review the identification and issue a Visitor's Badge valid only for the date of the meeting.

Special Accommodations

The meeting is physically accessible to people with disabilities. Requests for sign language interpretation or other auxiliary aids should be directed to Ms. Carolyn Porter at 503-326-6352 at least 5 days prior to the meeting date.

Although nonemergency issues not contained in STAR Panel agendas may come before the STAR Panel for discussion, those issues may not be the subject of formal Panel action during this meeting. STAR Panel action will be restricted to those issues specifically listed in this notice, and any issues arising after publication of this notice that require emergency action under section 305 (c) of the Magnuson-Stevens Fishery Conservation and Management Act, provided the public has been notified of the Panel's intent to take final action to address the emergency.

Dated: January 28, 2002.

Richard W. Surdi,

Acting Director, Office of Sustainable Fisheries, National Marine Fisheries Service.

[FR Doc. 02–2529 Filed 1–31–02; 8:45 am]

BILLING CODE 3510–22–S

DEPARTMENT OF DEFENSE

Office of the Secretary

Continuing Collection; Comment Request

AGENCY: Office of the Assistant Secretary of Defense (Health Affairs), DoD.

ACTION: Notice.

SUMMARY: In compliance with section 3506(c)(2)(A) of the Paperwork Reduction Act of 1995, the Office of the Assistant Secretary of Defense (Health Affairs) announces the extension of a currently approved collection and seeks public comment on the provisions thereof. Comments are invited on: (a) Whether the proposed collection of information is necessary for the proper performance of the functions of the agency, including whether the information shall have practical utility; (b) the accuracy of the agency's estimate of the burden of the proposed information collection; (c) ways to enhance the quality, utility, and clarity of the information to be collected; and (d) ways to minimize the burden of the information collection on respondents, including the use of automated collection techniques or other forms of information technology.

DATES: Comments and recommendations should be received on or before April 2, 2002.

ADDRESSES: Written comments and recommendations on the continuing information collection should be sent to the TRICARE Management Activity, Special Contracts & Operations Office, Attn: Terri Katsouranis, 16401 East Centretech Parkway, Aurora, CO 80011–9043.

FOR FURTHER INFORMATION CONTACT: To request more information on the continuation of this information collection, please write to the above address or contact Terri Katsouranis by calling (303) 676–3444 or email at terri.katsouranis@tma.osd.mil.

Title, Associated Form and OMB Number: Continued Health Care Benefit Program (CHCBP) Application Form DD 2837; OMB Number 0704–0364.

Needs and Uses: The continuing information collection requirement is necessary for individuals to apply for enrollment in the Continued Health Care Benefit Program (CHCBP). The CHCBP is a program of temporary health care benefit coverage that is made available to eligible individuals who lose health care under the Military Health System.

Affected Public: Individuals.

Annual Burden Hours: 202.

Number of Respondents: 808.

Responses Per Respondent: 1.

Average Burden Per Response: 15 minutes.

Frequency: On Occasion.

SUPPLEMENTARY INFORMATION:

Summary of Information Collection

Respondents are individuals who are or were beneficiaries of the Military Health System (MHS) and who desire to enroll in the CHCBP following their loss of entitlement to health care coverage in the MHS. These beneficiaries include the active duty service member or former service member (who for purposes of this notice shall be referred to as ''service member''), an unmarried child of a service member who cease to meet the requirements for being considered a dependent, and a child placed for adoption or legal custody with the service member.

In order to be eligible for health care coverage under CHCBP, an individual must first enroll in CHCBP. DD Form 2837 is used as the information collection vehicle for that enrollment. The CHCBP is a legislatively mandated program and it is anticipated the program will continue indefinitely. As such, the need for collecting information that will allow an individual to enroll in CHCBP continues and the Department of Defense is thus publishing this formal notice.

Dated: January 25, 2002.

Patricia L. Toppings,

Alternate OSD Federal Register Liaison Officer, Department of Defense.

[FR Doc. 02–2471 Filed 1–31–02; 8:45 am]

BILLING CODE 5001–08–M

DEPARTMENT OF DEFENSE

Office of the Secretary

Proposed Collection; Comment Request

AGENCY: Defense Logistics Agency, Office of Small and Disadvantaged Business Utilization, DoD.

ACTION: Notice.

SUMMARY: In compliance with section 3506(c)(2)(A) of the Paperwork Reduction Act of 1995, the Defense Logistics Agency announces a proposed public information collection and seeks public comment on the provisions thereof. Comments are invited on: (a) Whether the proposed collection of information is necessary for the proper performance of the functions of the agency, including whether the information shall have practical utility; (b) the accuracy of the agency's estimate of the burden of the proposed information collection; (c) ways to enhance the quality, utility, and clarity of the information to be collected; and (d) ways to minimize the burden of the information collection on respondents, including through the use of automated collection techniques or other forms of information technology.

DATES: Consideration will be given to all comments received by April 2, 2002.

ADDRESSES: Written comments and recommendations on the proposed information collection should be sent to Director, Defense Logistics Agency, ATTN: Diana Maykowskyj, DB, 8725 John J. Kingman Road, Suite 1127, Fort Belvoir, VA 22060–6221.

FOR FURTHER INFORMATION CONTACT: To request more information on this proposed information collection or to obtain a copy of the proposal and associated collection instruments, please write to the above address, or call Ms. Diana Maykowskyj at (703) 767–1656.

Title; Associated Form; and OMB Number: Request for approval for Procurement Technical Assistance Center Cooperative Agreement Performance Report, DLA Form 1806, OMB Control Number 0704–0320.

Needs and Uses: The Defense Logistics Agency uses the report as the principal instrument for measuring the performance of Cooperative Agreements awards made under 10 U.S.C. Chapter 142.

Affected Public: State and local governments, private nonprofit organizations, Indian tribal organizations and Indian economic enterprises.

Annual Burden Hours: 1246.

Number of Respondents: 89.

Responses Per Respondent: 2.

Average Burden Per Response: 7 hours.

Frequency: Semiannually.

SUPPLEMENTARY INFORMATION:

Summary of Information Collection

Each cooperative agreement award recipient submitted goals and objectives in their application that were subsequently incorporated into their cooperative agreement awards. The level of achievement of these goals and the funds expended in the process of conducting the program is measured by the report. The government's continued funding of a cooperative agreement and the decision to exercise an option award for a cooperative agreement award is based to a significant degree on the award holder's current performance as measured by the report. Information from the report is also used to identify

programs that may be in need of assistance and/or increased surveillance.

Dated: January 25, 2002.

Patricia L. Toppings,

Alternate OSD Federal Register Liaison Officer, Department of Defense.

[FR Doc. 02–2472 Filed 1–31–02; 8:45 am]

BILLING CODE 5001–08–M

DEPARTMENT OF DEFENSE

Office of the Secretary

Submission for OMB review; comment request

ACTION: Notice.

The Department of Defense has submitted to OMB for clearance, the following proposal for collection of information under the provisions of the Paperwork Reduction Act (44 U.S.C. chapter 35).

DATES: Consideration will be given to all comments received by March 4, 2002.

Title, Form, and OMB Number: TRICARE Plus Enrollment and Disenrollment Applications; DD Form X437 and X438; OMB Number 0720–[To Be Determined].

Type Of Request: New Collection.

Number of Respondents: 20,689.

Responses Per Respondent: 1.

Annual Responses: 20,689.

Average Burden Per Response: 7 minutes.

Annual Burden Hours: 2,150.

Needs And Uses: These collection instruments serve as an application for enrollment and disenrollment in the Department of Defense's TRICARE Plus Health Plan established in accordance with Title 10 U.S.C. sections 1099 (which calls for a healthcare enrollment system) and 1086 (which authorizes TRICARE eligibility of Medicare Eligible Persons and has resulted in the development of a new enrollment option called TRICARE Plus). The information collected provides the TRICARE contractors with necessary data to determine beneficiary eligibility and to identify the selection of a health care option.

Affected Public: Individuals or Households.

Frequency: On Occasion.

Respondent's Obligation: Required To Obtain or Retain Benefits.

OMB Desk Officer: Ms. Cristal A. Thomas.

Written comments and recommendations on the proposed information collection should be sent to Ms. Thomas at the Office of Management and Budget, Desk Officer for DoD Health Affairs, Room 10235, New Executive Office Building, Washington, DC 20503.

DOD Clearance Officer: Mr. Robert Cushing.

Written requests for copies of the information collection proposal should be sent to Mr. Cushing, WHS/DIOR, 1215 Jefferson Davis Highway, Suite 1204, Arlington, VA 22202–4302.

Dated: January 25, 2002.

Patricia L. Toppings,

Alternate OSD Federal Register Liaison Officer, Department of Defense.

[FR Doc. 02–2469 Filed 1–31–02; 8:45 am]

BILLING CODE 5001–08–M

DEPARTMENT OF DEFENSE

Office of the Secretary

Submission for OMB Review; Comment Request

ACTION: Notice.

The Department of Defense has submitted to OMB for clearance, the following proposal for collection of information under the provisions of the Paperwork Reduction Act (44 U.S.C. Chapter 35).

DATES: Consideration will be given to all comments received by March 4, 2002.

Title, Form, and OMB Number: Department of Defense Dependents Schools (DoDDS) Overseas Employment Opportunities for Education; DS Form(s) 5010, 5011, 5012, 5013; OMB Number 0704–0370.

Type of Request: Reinstatement.

Number of Respondents: 25,120.

Responses Per Respondent: 1.

Annual Responses: 25,120.

Average Burden Per Response: 10minutes.

Annual Burden Hours: 4,127.

Needs and Uses: This information collection is necessary to obtain information on prospective applicants for educator positions within the Department of Defense Dependents Schools. The information is used to verify employment history of educator applicants and to determine creditable previous experience for pay-setting purposes on candidates selected for positions. In addition, the information is used to ensure that those individuals selected for employment with the Department of Defense Schools possess the abilities and personal traits that give promise of outstanding success under the unusual circumstances they will find working abroad. Information gathered is used to ensure that the Department of Defense Dependents Schools personnel practices meet the requirements of Federal law.

Affected Public: Individuals or households; business or other for-profit institutions; State, Local or Tribal Government.

Frequency: On occasion.

Respondent's Obligation: Required to obtain or retain benefits.

OMB Desk Officer: Ms. Jackie Zeiher.

Written comments and recommendations on the proposed information collection should be sent to Ms. Zeiher at the Office of Management and Budget, Desk Officer for DoD, Room 10236, New Executive Office Building, Washington, DC 20503.

DOD Clearance Officer: Mr. Robert Cushing.

Written requests for copies of the information collection proposal should be sent to Mr. Cushing, WHS/DIOR, 1215 Jefferson Davis Highway, Suite 1204, Arlington, VA 22202–4302.

Dated: January 25, 2002.

Patricia L. Toppings,

Alternate OSD Federal Register Liaison Officer, Department of Defense.

[FR Doc. 02–2470 Filed 1–31–02; 8:45 am]

BILLING CODE 5001–08–M

DEPARTMENT OF EDUCATION

[CFDA Nos.: 84.141A and 84.149A]

Notice Inviting Applications for New Awards for Fiscal Year 2002 for the High School Equivalency Program and the College Assistance Migrant Program

AGENCY: Department of Education.

ACTION: Notice inviting applications for new awards for fiscal year (FY) 2002 for the High School Equivalency Program (HEP) and the College Assistance Migrant Program (CAMP).

Purpose of Programs: The purpose of HEP and CAMP is to provide grants to institutions of higher education (IHEs), or to private non-profit agencies working in cooperation with IHEs, to help migrant and seasonal farmworkers complete high school and succeed in postsecondary education.

Eligible Applicants: IHEs or private non-profit agencies working in cooperation with IHEs.

Applications Available: February 1, 2002.

Deadline for Transmittal of Applications: March 18, 2002.

Deadline for Intergovernmental Review: May 17, 2002.

Available Funds: HEP $3,000,000.

Estimated Range of Awards: HEP $150,000–$375,000.

Estimated Average Size of Awards: HEP $340,000.

Estimated Number of Awards: HEP 9.

Available Funds: CAMP $5,000,000.

Estimated Range of Awards: CAMP $150,000–$375,000.

Estimated Average Size of Awards: CAMP $340,000.

Estimated Number of Awards: CAMP 15.

Note: The Department is not bound by any estimates in this notice.

Project Period: Up to 60 months.

SUPPLEMENTARY INFORMATION: HEP assists migrant and seasonal farmworkers to obtain a general education diploma (GED) and to be placed in postsecondary education or training, career positions, or the military. By locating the programs at IHEs, migrant and seasonal farmworkers also have opportunities to attend cultural events, academic programs, and other educational and cultural activities usually not available to them. CAMP assists migrant and seasonal farmworkers to successfully complete the first academic year of study in a college or university, and provides follow-up services to help students continue in postsecondary education.

The selection criteria used to review applications are included in the application package. The Congress has appropriated a total of $23,000,000 for HEP and $15,000,000 for CAMP for FY 2002. Increases in the FY 2002 appropriations ($3,000,000 for HEP and $5,000,000 for CAMP) will be used to fund new applications.

Applicable Regulations: (a) The Education Department General Administrative Regulations (EDGAR) in 34 CFR parts 74, 75, 77, 79, 82, 85, 86, 97, 98, and 99; (b) 34 CFR part 206, and the definitions of a migrant and seasonal farmworker in 34 CFR 200.40 and 20 CFR part 652, respectively.

FOR FURTHER INFORMATION CONTACT: To obtain a copy of the application or to obtain information on the program, call or write Mary L. Suazo, U.S. Department of Education, Office of Elementary and Secondary Education, Office of Migrant Education, 400 Maryland Avenue, SW., Room 3E227, FOB 6, Washington, DC 20202–6135. Telephone Number: (202) 260–1396. Inquiries may be sent by e-mail to *mary.suazo@ed.gov* or by FAX at (202) 205–0089. A copy of the application can be obtained electronically at: *http://www.ed.gov/GrantApps*.

If you use a telecommunications device for the deaf (TDD) you may call the Federal Information Relay Service (FIRS) at 1–800–877–8339. Individuals with disabilities may obtain this document in an alternative format (e.g., Braille, large print, audiotape, or computer diskette) on request to the contact person listed in the preceding paragraph.

Electronic Access to This Document

You may view this document, as well as all other Department of Education documents published in the **Federal Register**, in text or Adobe Portable Document Format (PDF) on the Internet at the following site: *www.ed.gov/legislation/FedRegister*.

To use PDF you must have Adobe Acrobat Reader, which is available free at this site. If you have questions about using PDF, call the U.S. Government Printing Office toll free at 1–888–293–6498; or in the Washington, DC area at (202) 512–1530.

Note: The official version of this document is the document published in the **Federal Register**. Free Internet access to the official edition of the **Federal Register** and the Code of Federal Regulations is available on GPO Access at: *http://www.access.gpo.gov/nara/index.html*.

Program Authority: 20 U.S.C. 1070d–2.

Dated: January 28, 2002.

Susan B. Neuman,

Assistant Secretary for Elementary and Secondary Education.

[FR Doc. 02–2485 Filed 1–31–02; 8:45 am]

BILLING CODE 4000–01–U

DEPARTMENT OF EDUCATION

Recognition of Accrediting Agencies, State Agencies for the Approval of Public Postsecondary Vocational Education, and State Agencies for the Approval of Nurse Education

AGENCY: National Advisory Committee on Institutional Quality and Integrity, Department of Education (The Advisory Committee).

What Is the Purpose of This Notice?

The purpose of this notice is to invite written comments on accrediting agencies and State approval agencies whose applications to the Secretary for initial or renewed recognition or whose interim reports will be reviewed at the Advisory Committee meeting to be held on June 3–5, 2002.

Where Should I Submit my Comments?

Please submit your written comments by March 18, 2002, to Carol Griffiths, Chief, Accrediting Agency Evaluation, Accreditation and State Liaison. You may contact her at the U.S. Department of Education, room 7105, MS 8509, 1990 K Street, NW, Washington, DC 20006, telephone: (202) 219–7011. Individuals who use a telecommunications device for the deaf (TDD) may call the Federal Information Relay Service at 1–800–877–8339.

What Is the Authority for the Advisory Committee?

The National Advisory Committee on Institutional Quality and Integrity is established under section 114 of the Higher Education Act (HEA), as amended, 20 U.S.C. 1011c. One of the purposes of the Advisory Committee is to advise the Secretary of Education on the recognition of accrediting agencies and State approval agencies.

Will This Be My Only Opportunity To Submit Written Comments?

Yes, this notice announces the only opportunity you will have to submit written comments. However, a subsequent **Federal Register** notice will announce the meeting and invite individuals and/or groups to submit requests to make oral presentations before the Advisory Committee on the agencies that the Committee will review. That notice, however, does not offer a second opportunity to submit written comment.

What Happens to the Comments That I Submit?

We will review your comments, in response to this notice, as part of our evaluation of the agencies' compliance with the Secretary's Criteria for Recognition of Accrediting Agencies and State Approval Agencies. The Criteria are regulations found in 34 CFR part 602 (for accrediting agencies) and in 34 CFR part 603 (for State approval agencies).

We will also include your comments with the staff analyses we present to the Advisory Committee at its June 2002 meeting. Therefore, in order for us to give full consideration to your comments, it is important that we receive them by March 18, 2002. In all instances, your comments about agencies seeking initial or continued recognition must relate to the Criteria for Recognition. In addition, your comments for any agency whose interim report is scheduled for review must relate to the issues raised and the Criteria for Recognition cited in the Secretary's letter that requested the interim report.

What Happens to Comments Received After the Deadline?

We will review any comments received after the deadline. If such comments, upon investigation, reveal that the accrediting agency is not acting in accordance with the Criteria for Recognition, we will take action either

before or after the meeting, as appropriate.

What Agencies Will the Advisory Committee Review at the Meeting?

The Secretary of Education recognizes accrediting agencies and State approval agencies for public postsecondary vocational education and nurse education if the Secretary determines that they meet the Criteria for Recognition. Recognition means that the Secretary considers the agency to be a reliable authority as to the quality of education offered by institutions or programs that are encompassed within the scope of recognition he grants to the agency. The following agencies will be reviewed during the June 2002 meeting of the Advisory Committee:

Nationally Recognized Accrediting Agencies

Petition for Initial Recognition

1. Teacher Education Accreditation Council (Requested scope of recognition: The accreditation of professional education programs in institutions offering baccalaureate and graduate degrees for the preparation of teachers K–12.)

Petitions for Renewal of Recognition

1. American Association of Nurse Anesthetists, Council on Accreditation of Nurse Anesthesia Educational Programs (Current scope of recognition: The accreditation of institutions and programs of nurse anesthesia at the certificate, master's, or doctoral degree levels.)
2. Association of Advanced Rabbinical and Talmudic Schools, Accreditation Commission (Current scope of recognition: The accreditation and preaccreditation (''Correspondent'' and ''Candidate'') of advanced rabbinical and Talmudic schools.)
3. American Board of Funeral Service Education, Committee on Accreditation (Current scope of recognition: The accreditation of institutions and programs awarding diplomas, associate degrees and bachelor's degrees in funeral service or mortuary science.)
4. Accrediting Commission on Education for Health Services Administration (Current scope of recognition: The accreditation throughout the United States of graduate programs in health services administration.)
5. The American Dietetic Association, Commission on Accreditation for Dietetics Education (Current scope of recognition: The accreditation of Coordinated Programs in Dietetics at both the undergraduate and graduate level, postbaccalaureate Dietetic Internships, and Dietetic Technician Programs at the associate degree level.) (Requested expansion of scope of recognition: The current scope of recognition to include the accreditation of Didactic Programs in Dietetics at both the undergraduate and graduate level, and its accreditation of programs offered via distance education.)
6. Council on Education for Public Health (Current scope of recognition: The accreditation and preaccreditation (''Preaccreditation Status'') of graduate schools of public health, graduate programs in community health education outside schools of public health, and graduate programs in community health/preventive medicine outside schools of public health.)
7. Liaison Committee on Medical Education (Current scope of recognition: The accreditation of medical education programs leading to the M.D. degree.)
8. Middle States Association of Colleges and Schools, Commission on Higher Education (Current scope of recognition: The accreditation and preaccreditation (''Candidate Status'') of institutions in Delaware, the District of Columbia, Maryland, New Jersey, New York, Pennsylvania, Puerto Rico, the U.S. Virgin Islands, the Republic of Panama and a limited number of freestanding American-style institutions abroad that are chartered or licensed by an appropriate agency within the Middle States region.)
9. National Association of Nurse Practitioners in Women's Health, Council on Accreditation (Current scope of recognition: The accreditation of women's health nurse practitioner programs located within the United States and its territories.)
10. New York Board of Regents (Current scope of recognition: The accreditation (registration) of collegiate degree-granting programs or curricula offered by institutions of higher education in the State of New York and of credit-bearing certificate and diploma programs offered by degree-granting institutions of higher education in the State of New York.)

Interim Reports

(An interim report is a follow-up report on an accrediting agency's compliance with specific criteria for recognition that was requested by the Secretary when the Secretary granted renewed recognition to the agency.)

1. Accreditation Commission for Acupuncture and Oriental Medicine.
2. American Association for Marriage and Family Therapy, Commission on Accreditation for Marriage and Family Therapy Education.
3. American Bar Association, Council of the Section of Legal Education and Admissions to the Bar.
4. American Osteopathic Association, Bureau of Professional Education.
5. American Podiatric Medical Association, Council on Podiatric Medical Education.
6. Council on Occupational Education.
7. Midwifery Education Accreditation Council.
8. National Council for Accreditation of Teacher Education.
9. North Central Association of Colleges and Schools, Executive Board of the Commission on Schools.

State Agencies Recognized for the Approval of Public Postsecondary Vocational Education

Petition for Renewal of Recognition

1. New York State Board of Regents (Public Postsecondary Vocational Education)

Interim Report

1. Oklahoma State Regents for Higher Education

State Agencies Recognized for the Approval of Nurse Education

Petition for Initial Recognition

1. North Dakota Board of Nursing

Petition for Renewal of Recognition

1. New York State Board of Regents (Nursing Education)

Where Can I Inspect Petitions and Third-Party Comments Before and After the Meeting?

All petitions and those third-party comments received in advance of the meeting, will be available for public inspection and copying at the U.S. Department of Education, room 7105, MS 8509, 1990 K Street, NW, Washington, DC 20006, telephone (202) 219–7011 between the hours of 8 a.m. and 3 p.m., Monday through Friday, until May 13, 2002. They will be available again after the June 3–5 Advisory Committee meeting. An appointment must be made in advance of such inspection or copying.

How May I Obtain Electronic Access to This Document?

You may view this document, as well as all other Department of Education documents published in the **Federal Register**, in text or Adobe Portable Document Format (PDF) on the Internet at the following site: *http://www.ed.gov/legislation/FedRegister.*

To use PDF you must have Adobe Acrobat Reader, which is available free

at this site. If you have questions about using PDF, call the U.S. Government Printing Office (GPO), toll free, at 1–888–293–6498; or in the Washington, DC, area at (202) 512–1530.

Note: The official version of this document is the document published in the **Federal Register**. Free Internet access to the official edition of the **Federal Register** and the Code of Federal Regulations is available on GPO Access at: *http://www.access.gpo.gov/nara/index.html.*

Authority: 5 U.S.C. Appendix 2.

Dated: January 24, 2002.

Kenneth W. Tolo,

Acting Deputy Assistant Secretary for Policy, Planning, and Innovation, Office of Postsecondary Education.

[FR Doc. 02–2440 Filed 1–31–02; 8:45 am]

BILLING CODE 4000–01–P

DEPARTMENT OF ENERGY

Research and Development for Locomotive Emissions Reduction and Efficiency Improvements

AGENCY: Albuquerque Operations Office, Department of Energy.

ACTION: Notice of availability of solicitation.

SUMMARY: The U. S. Department of Energy (DOE), Albuquerque Operations Office (AL), is seeking applications for energy efficiency improvements and emissions reduction. Through this solicitation, DOE seeks to improve the energy efficiency and emissions performance of locomotives through the use of advanced diesel engines, emission control technologies, and systems improvements. This solicitation primarily addresses technologies to meet locomotive EPA Tier 2 emissions requirements while providing technologies to improve overall energy efficiency. A DOE technical panel will perform a scientific and engineering evaluation of each responsive application to determine the merit of the approach. DOE anticipates issuing one or more financial assistance instruments from this solicitation. Funding in the amount of $2,500,000 and $5,000,000 over a four-year period is anticipated to be available. Cost sharing of 50% by the applicant is required.

DATES: Applications are to be received no later than 3:00 p.m. local prevailing time on March 29, 2002. Any application received after the due date will not be evaluated.

FOR FURTHER INFORMATION CONTACT: Erwin E. Fragua, Contract Specialist, DOE/AL, at (505) 845–6442 or by e-mail at *efragua@doeal.gov.*

SUPPLEMENTARY INFORMATION: The solicitation will be available on the internet on or about February 1, 2002 at the following Web site: *http://e-center.doe.gov.* Applications must be prepared and submitted in accordance with the instructions and forms contained in the solicitation. For profit and not-for-profit organizations, state and local governments, Indian tribes, and institutions of higher learning are eligible for awards under this solicitation. Teaming arrangements are strongly encouraged especially among manufacturers of locomotives and of locomotive components to take advantage of the best complementary technologies available. It is the desire of the DOE that the primary applicant be a locomotive manufacturer.

Issued in Albuquerque, New Mexico, January 25, 2002.

Martha L. Youngblood,

Contracting Officer, Complex Support Branch, Office of Contracts and Procurement.

[FR Doc. 02–2484 Filed 1–31–02; 8:45 am]

BILLING CODE 6450–01–P

DEPARTMENT OF ENERGY

Federal Energy Regulatory Commission

[Docket No. RP99–301–041]

ANR Pipeline Company; Notice of Compliance Filing

January 28, 2002.

Take notice that on January 22, 2002, ANR Pipeline Company (ANR) filed a service agreement with CoEnergy Trading Company in compliance with the Commission's Order on Rehearing dated November 21, 2001. *ANR Pipeline Company,* 97 FERC ¶ 61,222 (2001).

Any person desiring to protest said filing should file a protest with the Federal Energy Regulatory Commission, 888 First Street, NE., Washington, DC 20426, in accordance with section 385.211 of the Commission's rules and regulations. All such protests must be filed in accordance with section 154.210 of the Commission's regulations. Protests will be considered by the Commission in determining the appropriate action to be taken, but will not serve to make protestants parties to the proceedings. Copies of this filing are on file with the Commission and are available for public inspection. This filing may also be viewed on the Web at *http://www.ferc.gov* using the ''RIMS'' link, select ''Docket#'' and follow the instructions (call 202–208–2222 for assistance). Comments, protests and interventions may be filed electronically via the Internet in lieu of paper. See, 18 CFR 385.2001(a)(1)(iii) and the instructions on the Commission's Web site under the ''e-Filing'' link.

C. B. Spencer,

Acting Secretary.

[FR Doc. 02–2477 Filed 1–31–02; 8:45 am]

BILLING CODE 6717–01–P

DEPARTMENT OF ENERGY

Federal Energy Regulatory Commission

[Docket No. RP02–147–000]

ANR Pipeline Company; Notice of Proposed Changes in FERC Gas Tariff

January 28, 2002.

Take notice that on January 18, 2002, ANR Pipeline Company tendered for filing as part of its FERC Gas Tariff, Second Revised Volume No. 1, Fourth Revised Sheet No. 150, with an effective date of March 1, 2002.

ANR states that the above-referenced tariff sheet is being filed to add a bilateral Limitation of Liability provision to the Miscellaneous section of the General Terms and Conditions of ANR's FERC Gas Tariff.

ANR states that copies of the filing has been mailed to each of ANR's customers and affected state regulatory commissions.

Any person desiring to be heard or to protest said filing should file a motion to intervene or a protest with the Federal Energy Regulatory Commission, 888 First Street, NE., Washington, DC 20426, in accordance with sections 385.214 or 385.211 of the Commission's rules and regulations. All such motions or protests must be filed in accordance with section 154.210 of the Commission's regulations. Protests will be considered by the Commission in determining the appropriate action to be taken, but will not serve to make protestants parties to the proceedings. Any person wishing to become a party must file a motion to intervene. Copies of this filing are on file with the Commission and are available for public inspection. This filing may also be viewed on the Web at *http://www.ferc.gov* using the ''RIMS'' link, select ''Docket#'' and follow the instructions (call 202–208–2222 for assistance). Comments, protests and interventions may be filed electronically via the Internet in lieu of paper. See, 18 CFR 385.2001(a)(1)(iii) and the

instructions on the Commission's Web site under the ''e-Filing'' link.

C. B. Spencer,

Acting Secretary.

[FR Doc. 02–2480 Filed 1–31–02; 8:45 am]

BILLING CODE 6717–01–P

DEPARTMENT OF ENERGY

Federal Energy Regulatory Commission

[Docket No. RP96–389–042]

Columbia Gulf Transmission Company; Notice of Negotiated Rate

January 28, 2002.

Take notice that on January 18, 2002, Columbia Gulf Transmission Company (Columbia Gulf) tendered for re-filing the following contract for disclosure of a negotiated rate transaction:

FTS–1 Service Agreement No. 71725 between Columbia Gulf Transmission Company and Entergy Mississippi, Inc., dated January 10, 2002

Columbia Gulf states that it is filing the service agreement to comply with the Commission's order issued December 21, 2001 in this docket.

Columbia Gulf states further that it has served copies of the filing on all parties identified on the official service list in Docket No. RP96–389.

Any person desiring to be heard or to protest said filing should file a motion to intervene or a protest with the Federal Energy Regulatory Commission, 888 First Street, NE., Washington, DC 20426, in accordance with sections 385.214 or 385.211 of the Commission's rules and regulations. All such motions or protests must be filed in accordance with section 154.210 of the Commission's regulations. Protests will be considered by the Commission in determining the appropriate action to be taken, but will not serve to make protestants parties to the proceedings. Any person wishing to become a party must file a motion to intervene. Copies of this filing are on file with the Commission and are available for public inspection. This filing may also be viewed on the Web at *http://www.ferc.gov* using the ''RIMS'' link, select ''Docket#'' and follow the instructions (call 202–208–2222 for assistance). Comments, protests and interventions may be filed electronically via the Internet in lieu of paper. See, 18 CFR 385.2001(a)(1)(iii) and the instructions on the Commission's Web site under the ''e-Filing'' link.

C. B. Spencer,

Acting Secretary.

[FR Doc. 02–2475 Filed 1–31–02; 8:45 am]

BILLING CODE 6717–01–P

DEPARTMENT OF ENERGY

Federal Energy Regulatory Commission

[Docket No. CP02–68–000]

Enbridge Pipelines (Midla) Inc.; Notice of Application

January 28, 2002.

Take notice that on January 15, 2002, Enbridge Pipelines (Midla) Inc. (Midla), 1100 Louisiana, Suite 3300, Houston, Texas 77002, filed in Docket No. CP02–68–000 a request pursuant to section 7(b) of the Natural Gas Act (NGA), for permission and approval to abandon by transfer to Mid Louisiana Gas Transmission Company (MTrans), its affiliated Louisiana Hinshaw Pipeline, certain transmission and related pipeline facilities located in the parishes of East Feliciana, West Feliciana, West Baton Rouge and East Baton Rouge, Louisiana, all as more fully set forth in the application which is on file with the Commission and open to public inspection. This filing may be viewed on the Web at *http://www.ferc.gov* using the ''RIMS'' link, select ''Docket #'' and follow the instructions (call (202) 208–2222 for assistance).

Midla requests abandonment authorization to transfer to MTrans the portion of its system extending from Milepost 135.08 in East Feliciana Parish, Louisiana to Milepost 171.53 in East Baton Rouge Parish, Louisiana, and related looping and transmission lateral lines in southeast Louisiana. Midla states that the facilities for which it seeks abandonment authority consist of approximately 77.81 miles of pipeline, ranging from six to 22 inches in diameter. Midla also requests that the Commission make a finding that the subject facilities will become nonjurisdictional once transferred to MTrans.

Midla states that the subject facilities are no longer required by the public convenience and necessity, and that the proposed abandonment and transfer to MTrans is in the public interest. Midla further states that the cost of operation and maintenance of the subject facilities can no longer be economically justified as part of Midla's system. Midla states that MTrans' integration of these facilities into its core intrastate business will allow for their efficient use and also provide significant competitive benefits in the area.

Midla states that upon approval of the proposed abandonment, the subject facilities will be transferred to MTrans at net book value, estimated to be $4,389,957, and that MTrans will operate the facilities as an integrated part of its intrastate system. Midla further states that it is not proposing to change its rates and has no current plans to file a rate case. Midla adds that the costs underlying any future rate case however, will be reduced as a result of the proposed abandonment.

Midla states that the proposed abandonment will result in no disruption of firm transportation service for Midla's customers whose primary receipt or delivery points are on the abandoned facilities. In addition, Midla states that the proposed abandonment will not affect Midla's ability to continue to provide natural gas transportation service for current customers whose receipt and delivery points remain on Midla's system after the proposed abandonment Midla states that it will have sufficient capacity on its remaining transmission facilities to render transportation services without detriment or disadvantage to these customers.

Any questions regarding this application should be directed to Claudia A. Schrull, Director of Regulatory Affairs, Enbridge Pipelines (Midla) Inc., 1100 Louisiana, Suite 3300, Houston, Texas 77002 at (713) 821–2045.

There are two ways to become involved in the Commission's review of this abandonment. First, any person wishing to obtain legal status by becoming a party to the proceedings for this abandonment should, on or before February 19, 2002, file with the Federal Energy Regulatory Commission, 888 First Street, NE., Washington, DC 20426, a motion to intervene in accordance with the requirements of the Commission's Rules of Practice and Procedure (18 CFR 385.214 or 385.211) and the Regulations under the NGA (18 CFR 157.10). A person obtaining party status will be placed on the service list maintained by the Secretary of the Commission and will receive copies of all documents filed by the applicant and by all other parties. A party must submit 14 copies of filings made with the Commission and must mail a copy to the applicant and to every other party in the proceeding. Only parties to the proceeding can ask for court review of Commission orders in the proceeding.

However, a person does not have to intervene in order to have comments considered. The second way to participate is by filing with the Secretary of the Commission, as soon as possible, an original and two copies of comments in support of or in opposition to this abandonment. The Commission will consider these comments in determining the appropriate action to be taken, but the filing of a comment alone will not serve to make the filer a party to the proceeding. The Commission's rules require that persons filing comments in opposition to the abandonment provide copies of their protests only to the party or parties directly involved in the protest.

Persons who wish to comment only on the environmental review of this abandonment should submit an original and two copies of their comments to the Secretary of the Commission. Environmental commenters will be placed on the Commission's environmental mailing list, will receive copies of the environmental documents, and will be notified of meetings associated with the Commission's environmental review process. Environmental commenters will not be required to serve copies of filed documents on all other parties. However, the non-party commenters will not receive copies of all documents filed by other parties or issued by the Commission (except for the mailing of environmental documents issued by the Commission) and will not have the right to seek court review of the Commission's final order.

Comments, protests and interventions may be filed electronically via the Internet in lieu of paper. *See,* 18 CFR 385.2001(a)(1)(iii) and the instructions on the Commission's web site under the ''e-Filing'' link

If the Commission decides to set the application for a formal hearing before an Administrative Law Judge, the Commission will issue another notice describing that process. At the end of the Commission's review process, a final Commission order approving or denying abandonment will be issued.

C. B. Spencer,

Acting Secretary.

[FR Doc. 02–2473 Filed 1–31–02; 8:45 am]

BILLING CODE 6717–01–P

DEPARTMENT OF ENERGY

Federal Energy Regulatory Commission

[Docket No. RP02–148–000]

Midwestern Gas Transmission Company; Notice of Proposed Changes in FERC Gas tariff

January 28, 2002.

Take notice that on January 18, 2002, Midwestern Gas Transmission Company (Midwestern) tendered for filing to become part of its FERC Gas Tariff, Third Revised Volume No. 1, the following tariff sheets to become effective March 1, 2002:

First Revised Sheet No. 236
First Revised Sheet No. 268
First Revised Sheet No. 269

Midwestern states that the purpose of this filing is to revise Subsections 6.2 and 25.2 of the General Terms and Conditions. Midwestern's currently effective tariff imposes interest charges on all late payments. Midwestern proposes to revise Subsection 6.2 to impose an interest charge for late payments on an invoice to the extent that the interest charge is $25 or more in a month. This proposed change will alleviate the administrative burden associated with interest charges on minor late payment amounts. Midwestern also proposes to revise Subsection 25.2 of the General Terms and Conditions, eliminating the prepayment requirement for all Shippers requesting firm service under Rate Schedule FT–A including released transportation service. Current industry practices do not require prepayments for shippers requesting new service.

Midwestern states that copies of this filing have been sent to all of Midwestern's shippers and interested state regulatory commissions.

Any person desiring to be heard or to protest said filing should file a motion to intervene or a protest with the Federal Energy Regulatory Commission, 888 First Street, NE., Washington, DC 20426, in accordance with sections 385.214 or 385.211 of the Commission's rules and regulations. All such motions or protests must be filed in accordance with section 154.210 of the Commission's regulations. Protests will be considered by the Commission in determining the appropriate action to be taken, but will not serve to make protestants parties to the proceedings. Any person wishing to become a party must file a motion to intervene. Copies of this filing are on file with the Commission and are available for public inspection. This filing may also be viewed on the web at *http://www.ferc.gov* using the ''RIMS'' link, select ''Docket#'' and follow the instructions (call 202–208–2222 for assistance). Comments, protests and interventions may be filed electronically via the Internet in lieu of paper. *See,* 18 CFR 385.2001(a)(1)(iii) and the instructions on the Commission's Web site under the ''e-Filing'' link.

C. B. Spencer,

Acting Secretary.

[FR Doc. 02–2481 Filed 1–31–02; 8:45 am]

BILLING CODE 6717–01–P

DEPARTMENT OF ENERGY

Federal Energy Regulatory Commission

[Docket No. RP02–149–000]

Reliant Energy Gas Transmission Company; Notice of Proposed Changes in FERC Gas Tariff

January 28, 2002.

Take notice that on January 23, 2002, Reliant Energy Gas Transmission Company (Reliant) tendered for filing as part of its FERC Gas Tariff, Fifth Revised Volume No. 1, the following tariff sheets, with an effective date of February 22, 2002:

Second Revised Sheet No. 454
First Revised Sheet No. 455

Reliant states that the purpose of the filing is to revise the tariff language regarding the date for Reliant's fuel percentages and Electric Power Costs (EPC) Tracker pursuant to Sections 27 and 28 of its General Terms and Conditions. Reliant seeks the ability to make the filings with FERC on or before the tariff mandated dates. The effective dates and base periods used for calculating the fuel percentages are to remain the same.

Any person desiring to be heard or to protest said filing should file a motion to intervene or a protest with the Federal Energy Regulatory Commission, 888 First Street, NE., Washington, DC 20426, in accordance with sections 385.214 or 385.211 of the Commission's rules and regulations. All such motions or protests must be filed in accordance with section 154.210 of the Commission's regulations. Protests will be considered by the Commission in determining the appropriate action to be taken, but will not serve to make protestants parties to the proceedings. Any person wishing to become a party must file a motion to intervene. Copies of this filing are on file with the Commission and are available for public inspection. This filing may also be

viewed on the Web at *http://www.ferc.gov* using the ''RIMS'' link, select ''Docket#'' and follow the instructions (call 202–208–2222 for assistance). Comments, protests and interventions may be filed electronically via the Internet in lieu of paper. *See,* 18 CFR 385.2001(a)(1)(iii) and the instructions on the Commission's Web site under the ''e-Filing'' link.

C.B. Spencer,

Acting Secretary.

[FR Doc. 02–2482 Filed 1–31–02; 8:45 am]

BILLING CODE 6717–01–P

DEPARTMENT OF ENERGY

Federal Energy Regulatory Commission

[Docket No. RP01–245–007]

Transcontinental Gas Pipe Line Corporation; Notice of Compliance Filing

January 28, 2002.

Take notice that on January 18, 2002 Transcontinental Gas Pipe Line Corporation (Transco) tendered for filing as part of its FERC Gas Tariff, Third Revised Volume No. 1, certain revised tariff sheets which are enumerated in Appendix A attached to the filing, to be effective December 1, 2001.

Transco states that the purpose of the limited Section 4 filing is to submit revised tariff sheets and supporting workpapers in compliance with Ordering Paragraph (B) of the Commission's Order on Rehearing issued December 19, 2001 in Docket No. RP01–245, et.al. The December 19th order directed Transco to file within 30 days its issuance revised tariff sheets to be effective December 1, 2001, containing rates which have been revised to reflect the removal of the cost of the North Padre Island facilities which were abandoned and transferred by Transco pursuant to the authorizations granted in Docket Nos. CP01–34–000, et.al. Specifically, the rates and workpapers reflect a decrease in the Operation and Maintenance Expenses, overall Cost of Service, and Rate Base; and changes in the gross and net plant allocation percentages and Dt-miles used in the calculation of the rates.

Transco states that included in Appendix B attached to the filing are the workpapers supporting the cost of the North Padre Island facilities being removed from Transco's rates. Appendix C contains workpapers supporting the Dt Miles used in the design and Appendix D contains workpapers supporting the overall cost allocation and rate design underlying the proposed rates.

Transco states that copies of the filing are being mailed to affected customers and interested State Commissions.

Any person desiring to protest said filing should file a protest with the Federal Energy Regulatory Commission, 888 First Street, NE., Washington, DC 20426, in accordance with section 385.211 of the Commission's rules and regulations. All such protests must be filed in accordance with section 154.210 of the Commission's Regulations. Protests will be considered by the Commission in determining the appropriate action to be taken, but will not serve to make protestants parties to the proceedings. Copies of this filing are on file with the Commission and are available for public inspection. This filing may also be viewed on the Web at *http://www.ferc.gov* using the ''RIMS'' link, select ''Docket#'' and follow the instructions (call 202–208–2222 for assistance). Comments, protests and interventions may be filed electronically via the Internet in lieu of paper. *See,* 18 CFR 385.2001(a)(1)(iii) and the instructions on the Commission's Web site under the ''e-Filing'' link.

C. B. Spencer,

Acting Secretary.

[FR Doc. 02–2478 Filed 1–31–02; 8:45 am]

BILLING CODE 6717–01–P

DEPARTMENT OF ENERGY

Federal Energy Regulatory Commission

[Docket Nos. CP02–70–000, CP02–71–000 and CP02–72–000]

Williams Field Services—Matagorda Offshore Company, LLC; Notice of Application

January 28, 2002.

Take notice that on January 18, 2002, Williams Field Services—Matagorda Offshore Company, LLC (WFS–MOC), One Williams Center, Tulsa, Oklahoma 74172, filed in Docket Nos. CP02–70–000, CP02–71–000 and CP02–72–000, an application pursuant to section 7(c) of the Natural Gas Act (NGA) and part 157 of the Commission's Rules and Regulations for a certificate of public convenience and necessity authorizing the acquisition and operation of the jurisdictional portion of the facilities known as the Matagorda Offshore Pipeline System (MOPS) located in, and offshore of, Texas, which consist of approximately 56 miles of pipeline and related facilities and owned by Northern Natural Gas Company. WFS–MOC also requests approval of its pro forma FERC Gas Tariff (Tariff) and its proposed initial transportation rates for firm and interruptible open-access transportation services. Additionally, WFS–MOC requests a blanket certificate of public convenience and necessity under subpart G of part 284 authorizing WFS–MOC to provide open-access transportation services under the Tariff; and a blanket certificate of public convenience and necessity under subpart F of part 157 authorizing WFS–MOC to perform certain routine construction, operation and abandonment activities, all as more fully set forth in the application which is on file with the Commission and open to public inspection. Copies of this filing are on file with the Commission and are available for public inspection. This filing may be viewed on the Web at *http://www.ferc.gov* using the ''RIMS'' link, select ''Docket #'' and follow the instructions (please call (202) 208–2222 for assistance).

Any questions regarding the application should be directed to Richard N. Stapler, Jr., Williams Field Services—Matagorda Offshore Company, LLC, 295 Chipeta Way, Salt Lake City, Utah 84108 at (801) 584–7068 or fax (801) 584–7862.

There are two ways to become involved in the Commission's review of this project. First, any person wishing to obtain legal status by becoming a party to the proceedings for this project should, on or before February 19, 2002, file with the Federal Energy Regulatory Commission, 888 First Street, NE., Washington, DC 20426, a motion to intervene in accordance with the requirements of the Commission's Rules of Practice and Procedure (18 CFR 385.214 or 385.211) and the Regulations under the NGA (18 CFR 157.10). A person obtaining party status will be placed on the service list maintained by the Secretary of the Commission and will receive copies of all documents filed by the applicant and by all other parties. A party must submit 14 copies of filings made with the Commission and must mail a copy to the applicant and to every other party in the proceeding. Only parties to the proceeding can ask for court review of Commission orders in the proceeding.

However, a person does not have to intervene in order to have comments considered. The second way to participate is by filing with the Secretary of the Commission, as soon as possible, an original and two copies of comments in support of or in opposition to this project. The Commission will

consider these comments in determining the appropriate action to be taken, but the filing of a comment alone will not serve to make the filer a party to the proceeding. The Commission's rules require that persons filing comments in opposition to the project provide copies of their protests only to the party or parties directly involved in the protest.

Persons who wish to comment only on the environmental review of this project should submit an original and two copies of their comments to the Secretary of the Commission. Environmental commenters will be placed on the Commission's environmental mailing list, will receive copies of the environmental documents, and will be notified of meetings associated with the Commission's environmental review process. Environmental commenters will not be required to serve copies of filed documents on all other parties. However, the non-party commenters will not receive copies of all documents filed by other parties or issued by the Commission (except for the mailing of environmental documents issued by the Commission) and will not have the right to seek court review of the Commission's final order.

The Commission may issue a preliminary determination on non-environmental issues prior to the completion of its review of the environmental aspects of the project. This preliminary determination typically considers such issues as the need for the project and its economic effect on existing customers of the applicant, on other pipelines in the area, and on landowners and communities. For example, the Commission considers the extent to which the applicant may need to exercise eminent domain to obtain rights-of-way for the proposed project and balances that against the non-environmental benefits to be provided by the project. Therefore, if a person has comments on community and landowner impacts from this proposal, it is important either to file comments or to intervene as early in the process as possible.

Comments, protests and interventions may be filed electronically via the Internet in lieu of paper. *See,* 18 CFR 385.2001(a)(1)(iii) and the instructions on the Commission's Web site under the ''e-Filing'' link.

If the Commission decides to set the application for a formal hearing before an Administrative Law Judge, the Commission will issue another notice describing that process. At the end of the Commission's review process, a final Commission order approving or denying a certificate will be issued.

C.B. Spencer,

Acting Secretary.

[FR Doc. 02–2474 Filed 1–31–02; 8:45 am]

BILLING CODE 6717–01–P

DEPARTMENT OF ENERGY

Federal Energy Regulatory Commission

[Docket No. RP02–79–001]

Williston Basin Interstate Pipeline Company; Notice of Compliance Filing

January 28, 2002.

Take notice that on January 18, 2002, Williston Basin Interstate Pipeline Company (Williston Basin), tendered for filing as part of its FERC Gas Tariff, Second Revised Volume No. 1, the following revised tariff sheets, with an effective date of December 26, 2001:

Tenth Revised Sheet No. 5
Eighth Revised Sheet No. 6
Eighth Revised Sheet No. 6A
Fifth Revised Sheet No. 7
Eighth Revised Sheet No. 8
Ninth Revised Sheet No. 9
Seventh Revised Sheet No. 10

Williston states that the filing is being made in response to the Commission's Order issued December 26, 2001 in Docket No. RP02–79–000. Williston Basin is submitting revised tariff sheets to reflect the Commission-approved confidentiality of its system maps.

Any person desiring to protest said filing should file a protest with the Federal Energy Regulatory Commission, 888 First Street, NE., Washington, DC 20426, in accordance with section 385.211 of the Commission's rules and regulations. All such protests must be filed in accordance with section 154.210 of the Commission's regulations. Protests will be considered by the Commission in determining the appropriate action to be taken, but will not serve to make protestants parties to the proceedings. Copies of this filing are on file with the Commission and are available for public inspection. This filing may also be viewed on the Web at *http://www.ferc.gov* using the ''RIMS'' link, select ''Docket#'' and follow the instructions (call 202–208–2222 for assistance). Comments, protests and interventions may be filed electronically via the Internet in lieu of paper. *See,* 18 CFR 385.2001(a)(1)(iii) and the instructions on the Commission's Web site under the ''e-Filing'' link.

C.B. Spencer,

Acting Secretary.

[FR Doc. 02–2479 Filed 1–31–02; 8:45 am]

BILLING CODE 6717–01–P

DEPARTMENT OF ENERGY

Federal Energy Regulatory Commission

[Docket No. RP97–28–009]

Wyoming Interstate Company, Ltd.; Notice of Negotiated Rate

January 28, 2002.

Take notice that on January 22, 2002, Wyoming Interstate Company, Ltd (WIC) tendered for filing a compliance filing pursuant to the Commission's order issued January 9, 2002 in this proceeding.

WIC states that the filing contains clarification and detailed explanation regarding the provisions of the negotiated rate transactions related to the Medicine Bow facilities.

Any person desiring to protest said filing should file a protest with the Federal Energy Regulatory Commission, 888 First Street, NE., Washington, DC 20426, in accordance with section 385.211 of the Commission's rules and regulations. All such protests must be filed in accordance with section 154.210 of the Commission's regulations. Protests will be considered by the Commission in determining the appropriate action to be taken, but will not serve to make protestants parties to the proceedings. Copies of this filing are on file with the Commission and are available for public inspection. This filing may also be viewed on the Web at *http://www.ferc.gov* using the ''RIMS'' link, select ''Docket#'' and follow the instructions (call 202–208–2222 for assistance). Comments, protests and interventions may be filed electronically via the Internet in lieu of paper. *See,* 18 CFR 385.2001(a)(1)(iii) and the instructions on the Commission's Web site under the ''e-Filing'' link.

C.B. Spencer,

Acting Secretary.

[FR Doc. 02–2476 Filed 1–31–02; 8:45 am]

BILLING CODE 6717–01–P

ENVIRONMENTAL PROTECTION AGENCY

[FRL–7136–9]

Agency Information Collection Activities: Proposed Collection; Comment Request; Notice of Agency Information Collection Activities for Tribal Lands Hazardous Waste Sites Survey

AGENCY: Environmental Protection Agency (EPA).

ACTION: Notice.

SUMMARY: In compliance with the Paperwork Reduction Act (44 U.S.C. 3501 *et seq.*), this document announces that EPA is planning to submit the following proposed Information Collection Request (ICR) to the Office of Management and Budget (OMB): Tribal Lands Hazardous Waste Sites Survey, EPA ICR Number 2059.01. Before submitting the ICR to OMB for review and approval, EPA is soliciting comments on specific aspects of the proposed information collection as described below.

DATES: Comments must be submitted on or before April 2, 2002.

ADDRESSES: Send comments to Kirby Biggs, Program Analyst, Office of Emergency and Remedial Response, U.S. EPA, Mail Code 5204G, 1200 Pennsylvania Avenue, NW., Washington, DC 20460.

FOR FURTHER INFORMATION CONTACT: Kirby Biggs, tel. (703) 308–8506, e-mail: *Biggs.Kirby@epa.gov*

SUPPLEMENTARY INFORMATION:

Affected entities: Entities potentially affected by this action are those which are officials or staff of tribal environmental departments or, otherwise, the environmental contact person for an Indian tribe.

Title: Tribal Lands Hazardous Waste Sites Survey (EPA ICR No. 2059.01.)

Abstract: The U.S. Environmental Protection Agency is conducting a study to detect and assess potential hazards to tribal communities from hazardous substances at contaminated sites in or near Indian Country. EPA will survey federally recognized tribes to identify sites that fall under the Comprehensive Environmental Response, Compensation and Liability Act (CERCLA), sites regulated under the Resource Conservation and Recovery Act (RCRA), and federal facility sites that are suspected of having an impact on human health and the environment in or near Indian lands.

This information will serve to inform EPA of the extent and location of sites potentially affecting Indian tribes and those sites of concern to the tribes. The inventory and potential risks to Indian Country will provide EPA with vital information regarding assessment of hazardous substances on and potential risks to Indian tribes from these sites. Tribal participation with the survey is voluntary.

An agency may not conduct or sponsor, and a person is not required to respond to, a collection of information unless it displays a currently valid OMB control number. The OMB control numbers for EPA's regulations are listed in 40 CFR part 9 and 48 CFR chapter 15.

The EPA would like to solicit comments to:

(i) Evaluate whether the proposed collection of information is necessary for the proper performance of the functions of the agency, including whether the information will have practical utility;

(ii) evaluate the accuracy of the agency's estimate of the burden of the proposed collection of information, including the validity of the methodology and assumptions used;

(iii) enhance the quality, utility, and clarity of the information to be collected; and

(iv) minimize the burden of the collection of information on those who are to respond, including through the use of appropriate automated electronic, mechanical, or other technological collection techniques or other forms of information technology, *e.g.,* permitting electronic submission of responses.

Burden Statement: The estimated reporting and record keeping burden for this collection is estimated to average two hours thirty minutes per response. The estimated number of respondents is 550 and the total annual hour burden is 1,375 hours. The frequency of response is once.

Burden means the total time, effort, or financial resources expended by persons to generate, maintain, retain, or disclose or provide information to or for a Federal agency. This includes the time needed to review instructions; develop, acquire, install, and utilize technology and systems for the purposes of collecting, validating, and verifying information, processing and maintaining information, and disclosing and providing information; adjust the existing ways to comply with any previously applicable instructions and requirements; train personnel to be able to respond to a collection of information; search data sources; complete and review the collection of information; and transmit or otherwise disclose the information.

Dated: January 24, 2002.

David Evans,

Director, State, Tribal and Site Investigation Center, Office Of Emergency and Remedial Response, Office of Solid Waste and Emergency Response.

[FR Doc. 02–2510 Filed 1–31–02; 8:45 am]

BILLING CODE 6560–50–P

ENVIRONMENTAL PROTECTION AGENCY

[ER–FRL–6626–2]

Environmental Impact Statements and Regulations; Availability of EPA Comments

Availability of EPA comments prepared pursuant to the Environmental Review Process (ERP), under section 309 of the Clean Air Act and section 102(2)(c) of the National Environmental Policy Act as amended. Requests for copies of EPA comments can be directed to the Office of Federal Activities at (202) 564–7167.

An explanation of the ratings assigned to draft environmental impact statements (EISs) was published in **Federal Register** dated May 18, 2001 (66 FR 27647).

Draft EISs

ERP No. D–AFS–L65393–WA Rating LO, Gardin—Taco Ecosystem Restoration Projects, Implementation, Vegetative Restoration, Road Closures, and Decommissioning, and other Road Improvements, Colville National Forest, Newport Ranger District, Pend Oreille and Stevens Counties, WA.

Summary: EPA had no objection to the proposed project. EPA did however request clarifying information on water quality, smoke impacts from prescribed fires and cumulative effects.

ERP No. D–COE–G39035–AR Rating LO, Greers Ferry Lake Shoreline Management Plan (SMP), Implementing Revision to Replace the 1994 Shore Management Plan, Revision include Zoning of Limited Development Areas, Vegetation Modification Provisions for Grandfathered Docks and Restrictions on Boats, Van Buren, Cleburne, Searcy, Stone, White, Independence and Pope Counties, AR.

Summary: EPA has Lack of Objections to the selection of the preferred alternatives and requests additional information in the Final EIS to more clearly identify the informational needs and strengthen the impact analysis and NEPA decisionmaking process.

ERP No. D–COE–L39058–00 Rating EO2, McNary Reservoir and Lower Snake River Reservoirs, To Maintain the Authorized Navigation Channel,

Dredged Material Management Plan (DMMP), Walla Walla District, Lower Snake River and Columbia River, ID and WA.

Summary: EPA expressed environmental objections related to the lack of a sediment reduction strategy, the effects of the proposed creation of salmon habitat, sediment characterization, and the need to form and utilize the proposed Local Sediment Management Group. EPA recommended that these topics, as well as a number of others, be addressed further in the EIS.

ERP No. D–DOE–E09808–KY Rating EC2, Kentucky Pioneer Integrated Gasification Combined Cycle Demonstration Project, Constructing and Operating a 540 megawatt-electric Plant, Clean Coal Technology Program, Clark County, KY.

Summary: EPA expressed environmental concerns with potential impacts to threatened and endangered species and requested that DOE coordinate with the Fish and Wildlife Service on such species. EPA also requested that DOE coordinate with the Corps of Engineers on potential wetlands impacts and that DOE provide additional information on cooling tower discharges.

ERP No. D–IBR–K61154–AZ Rating EC2, Reach 11 Recreation Master Plan, Central Arizona Project (CAP) Canal, Between Cave Creek and Scottdale Roads, For Recreational Purposes, Flood Detention Basin, City of Phoenix, Maricopa County, AZ.

Summary: EPA expressed environmental concerns and requested additional information regarding impacts to water resources and sensitive riparian habitat.

ERP No. D–MMS–A02242–00 Rating EC2, Outer Continental Shelf Oil and Gas Leasing Program: From Mid-2002 Through Mid-2007, 5-Year Schedule Leasing Program for 20 Sales in 8 of the Outer Continental Shelf Planning Areas, AL, AK, CA, FL, LA, MS, OR, TX and WA.

Summary: EPA expressed environmental concerns regarding air quality conformity and environmental justice issues. EPA requested that additional information on these issues be included in the final document.

ERP No. DS–BIA–K60031–NV Rating EC2, Moapa Paiute Energy Center/ Associated Facilities Construction, Operation and Maintenance of a 760 Megawatt (MW) Baseload Natural Gas-Fired Combined Cycle Power Plant, New Information concerning Structural, Route and Substation Location Changes, Moapa River Indian Reservation and Bureau of Land Management Lands, Clark County, NV.

Summary: EPA continues to have unresolved environmental concerns, and has requested additional information regarding impacts of the proposed project on surface and groundwater. In addition, EPA encouraged BIA to ensure that permit activities by the project applicant do not limit the consideration of all reasonable alternatives.

ERP No. DS–FHW–G40165–NM Rating LO, US 70 Corridor Improvement, Between Ruidoso Downs to Riverside, New Information and Circumstances, Implementation, Right-of-Way Acquisition, Lincoln County, NM.

Summary: EPA has no objections to the selection of the preferred alternative with implementation of the mitigation measures as described in the supplemental DEIS. EPA requested that the final mitigation plan be incorporated in the Record of Decision Document.

Final EISs

ERP No. F–AFS–J65310–00 Dakota Prairie Grasslands, Nebraska National Forest Units and Thunder Basin National Grassland, Land and Resource Management Plans 1999 Revisions, Implementation, MT, NB, WY, ND and SD.

Summary: EPA continued to express environmental concerns with Wilderness acreage and Wild and Scenic River mile designations that have decreased since the DEIS. Monitoring should be a top priority to ensure that the outstanding characteristics of these areas are not diminished by continued use at a higher management class level.

ERP No. F–AFS–J65335–MT Dry Fork Vegetation Restoration Project, To Improve Forest and Watershed Health and Sustainability, King Hill Ranger District, Lewis and Clark National Forest, Cascade and Judith Basin Counties, MT.

Summary: EPA continues to have environmental concerns associated with road construction and timber harvest.

ERP No. F–AFS–J65352–MT Kelsey-Beaver Fire Recovery Project, Fuel Reduction and Salvage of Fire-Killed Trees within Roderick South, Kelsey Creek and Upper Beaver Areas, Implementation, Kootenai National Forest, Three Rivers Ranger District, Lincoln County, MT.

Summary: EPA continued to express environmental concerns and recommened that winter logging be considered in erodible areas to reduce sediment production. EPA also noted the need for consistency of proposed actions with State TMDL development needs for the 303(d) listed South Fork Yaak River.

ERP No. F–APH–A82125–00 Fruit Fly Cooperative Control Program, Eradication Program, Implementation,.

Summary: The Final EIS addresses EPA's principal suggestion for improvements to the draft EIS.

ERP No. F–COE–J36050–ND Maple River Dam and Reservoir, Construction and Operation, Flood Control, Cass County Joint Water Resource District, Cass County, ND.

Summary: EPA continues to have environmental concerns regarding the relatively small area benefitting from the dam when compared to the impacts to cultural resources and riparian/wetland habitat.

ERP No. F–IBR–L65374–WA Potholes Reservoir Resource Management Plan, Implementation, COE Section 404 and NPDES Permits, Moses Lake, Grant County, WA.

Summary: No formal comment letter was sent to the preparing agency.

ERP No. F–STB–J53005–00 Powder River Basin Expansion Project, Construction of New Rail Facilities, Finance Docket No. 33407 Dakota, Minnesota and Eastern Railroad, SD, WY and MN.

Summary: EPA expressed environmental concerns for the lack of mitigation for the anticipated air impacts to Badlands and Wind Cave National Parks in South Dakota. Additionally, EPA is concerned about the potential placement of fill in the Blue Earth River if the Mankato by-pass (Option M2) is selected.

ERP No. F–USA–K11099–CA Oakland Army Base Disposal and Reuse Plan, Implementation, City of Oakland, Alameda County, CA.

Summary: No formal comment letter was sent to the preparing agency.

ERP No. FA–AFS–J65287–UT Rendezvous Vegetation Management Project, To the South Spruce Ecosystem Rehabilitation Project, Implementation, Dixie National Forest, Cedar City Ranger District, Iron and Kane Counties, UT.

Summary: EPA expressed environmental concerns about considering only No Action and one alternative with separable actions. Environmental concerns included impacts on old-growth forest and wildlife habitat. The project Purpose is unsupported by the data presented for the Proposed Action.

Dated: January 29, 2002.

B. Katherine Biggs,

Associate Director, NEPA Compliance Division, Office of Federal Activities.

[FR Doc. 02–2523 Filed 1–31–02; 8:45 am]

BILLING CODE 6560–50–P

ENVIRONMENTAL PROTECTION AGENCY

[ER–FRL–6626–1]

Environmental Impact Statements; Notice of Availability

Responsible Agency: Office of Federal Activities, General Information (202) 564–7167 or *www.epa.gov/oeca/ofa.* Weekly receipt of Environmental Impact Statements Filed January 21, 2002 Through January 25, 2002 Pursuant to 40 CFR 1506.9.

EIS No. 020031, Draft EIS, FHW, LA, Bayou Barataria Bridge/LA–302 Replacement, LA–45/Jean Lafitte Boulvard to LA–3257/Privateer Boulvard, Funding and US Army COE Section 404 and US Coast Guard Bridge Permits Issuance, Communities of Jean Lafitte and Barataria, Jefferson Parish, LA, Comment Period Ends: March 18, 2002, Contact: William C. Farr (225) 757–7615

EIS No. 020032, Draft Supplement, GSA, CA, San Diego-United States Courthouse Annex Project, Site Selection and Construction, New Information concerning Addition of the Union Street with Hotel San Diego Facade and Lobby Alternative, Central Business District (CBD), City of San Diego, San Diego County, CA, Comment Period Ends: March 18, 2002, Contact: Rosanne Nieto (415) 522–3490

EIS No. 020033, Final EIS, COE, NJ, Great Egg Harbor Inlet to Townsends Inlet, Storm Damage Reduction for Ocean City and Ludlam Island Utilizing Beachfill to Construct a Protective Berm and Dune, City of Ocean City, Strathmere (Township of Upper), City of Sea Isle City, Cape May County, NJ, Wait Period Ends: March 04, 2002, Contact: Robert L. Callegari (215) 656–6555

EIS No. 020034, Final EIS, GSA, NY, U.S. Mission to the United Nations (USUN), Demolition of Current USUN and the Construction of a New Facility on the Same Site, Located at 799 United Nations Plaza, New York, NY, Wait Period Ends: March 04, 2002, Contact: Peter Sneed (212) 264–3581

EIS No. 020035, Final EIS, AFS, OK, Quachita National Forest, An Amendment to the Land and Resource Management Plan, Implementation, Glover River, McCurtain County, OK, Wait Period Ends: March 04, 2002, Contact: Bill Pell (501) 321–5320

EIS No. 020036, Draft EIS, BLM, NV, Table Mountain Wind Generating Facility Project, Construction of a 150 to 205 Megawatt (MW) Wind Powered Electric Generation Facility and Ancillary Facilities, Right-of-Way Grant, Spring Mountain Range between the Communities of Good Springs, Sandy Valley, Jean and Primm, Clark County, NV, Comment Period Ends: April 01, 2002, Contact: Jerry Crockford (505) 599–6333

EIS No. 020037, Draft EIS, AFS, OR, CA, Programmatic—Siskiyou National Forest Suction Dredging Activities, Operating Plan Terms and Conditions Approval, Coos, Curry and Josephine Counties, OR and Del Norte County, CA, Comment Period Ends: March 18, 2002, Contact: Roger Mendenhall (541) 471–6521. This document is available on the Internet at: *http://www.fs.fed.us.r6/siskiyou*

EIS No. 020038, Draft EIS, FHW, MI, M–15 Reconstruction, I–75 to I–69, Funding and NPDES and US Army COE Section 404 Permits Issuance, Oakland and Genesse Counties, MI, Comment Period Ends: April 29, 2002, Contact: Ronald Kinney (517) 335–2621. This document is available on the Internet at: *http://www.mdot.state.mi.us/m15/*

EIS No. 020039, Draft EIS, JUS, CA, 14-Mile Border Infrastructure System Completion along the United States and Mexico Border, Areas I, V and VI, Pacific Ocean to just east of Tin Can Hill, San Diego County, CA, Comment Period Ends: April 01, 2002, Contact: Russell R. D'Hondt (202) 305–4386

EIS No. 020040, Final EIS, DOE, OR, Umatilla Generating Project, Construction and Operation, Gas-Fired Combined Cycle Electric Power Generation Plant, Nominal Generation Capacity of 550 megawatts (MW) Connection to the Regional Grid at McNary Substation, Umatilla County, AZ, Wait Period Ends: March 04, 2002, Contact: Inez Graetzer (503) 230–3786. This document is available on the Internet at:*http://www.efw.bpa.gov*

EIS No. 020041, Final SUPPLEMENT, NRC, Generic—license Renewal of Nuclear Power Plants, Supplement 5, Turkey Point Units 3 and 4 (NUREG–1437), Operating License Renewal, Biscayne Bay, Miami-Dade County, FL, Wait Period Ends: March 04, 2002, Contact: Dr. Michael T. Masnik (301) 415–1191

Amended Notices

EIS No. 010532, Draft EIS, AFS, IL, Natural Area Trails Project, Construction, Reconstruction, Maintenance and Designation of Trails for Hikers and Equestrian Use, Approval of Site-Specific Mitigation and/or Monitoring Standards, Shawnee National Forest, Jackson, Pope, Johnson, Union, Hardin and Saline Counties, IL, Comment Period Ends: March 11, 2001, Contact: Richard Johnson (618) 658–2111. Revision of FR notice published on 12/31/2001: CEQ Comment Period Ending 02/11/2002 has been Corrected to 03/11/2002

EIS No. 020017, Draft EIS, BLM, WY, Powder River Basin Oil and Gas Project, To Extract, Transport, and Sell Oil and Natural Gas Resource, Application of Permit to Drill (APD), Special Use Permit and Right-of-Way Grant, Campbell, Converse, Johnson and Sheridan Counties, WY, Due: April 18, 2002, Contact: Paul Beels (307) 684–1100. Published FR 01–18–02—Correction to Web site Address. This document is available on the Internet at: *http://www.prb-eis.org*

Dated: January 29, 2002.

B. Katherine Biggs,

Associate Director, NEPA Compliance Division, Office of Federal Activities.

[FR Doc. 02–2524 Filed 1–31–02; 8:45 am]

BILLING CODE 6560–50–P

ENVIRONMENTAL PROTECTION AGENCY

[FRL–7136–8]

Environmental Laboratory Advisory Board Meeting Dates, and Agenda

AGENCY: Environmental Protection Agency.

ACTION: Notice of Teleconference Meetings.

SUMMARY: The Environmental Protection Agency's Environmental Laboratory Advisory Board (ELAB) will have teleconference meetings on the third Wednesday of each month for 2002, with the first meeting occurring February 20, at 11 a.m. EST to discuss the ideas and views presented at the previous ELAB meetings, as well as new business. Items to be discussed include; recommendations to restructure the National Environmental Laboratory Advisory Board (NELAC) to allow it to better serve the future needs of EPA and the States; approaches to win acceptance and bring smaller environmental laboratories into a national program for laboratory accreditation; and recommendations on EPA's future role in NELAC. ELAB is soliciting input from the public on these and other issues related to the National Environmental Laboratory Accreditation Program (NELAP) and the NELAC standards. Written comments on NELAP laboratory accreditation and the NELAC

standards are encouraged and should be sent to Edward Kantor, DFO, P.O. Box 93478, Las Vegas NV 89193, or faxed to (702) 798–2261 or emailed to *kantor.edward@epa.gov.* Members of the public are invited to listen the teleconference calls, and time permitting, will be allowed to comment on issues discussed during this and previous ELAB meetings. Those persons interested in attending this teleconference should call Edward Kantor at 702–798–2690 to get the conference call in number. The number of lines are limited and will be distributed on a first come, first serve basis. Preferences will be given to a group wishing to attend over an individual.

Dated January 23, 2002.

John G. Lyon,

Director, Environmental Sciences Division, National Environmental Research Laboratory.

[FR Doc. 02–2511 Filed 1–31–02; 8:45 am]

BILLING CODE 6560–50–P

FEDERAL ACCOUNTING STANDARDS ADVISORY BOARD

Notice of Meeting for February 2002

Board Action: Pursuant to the Federal Advisory Committee Act (Pub. L. No. 92–463), as amended, and the FASAB Rules of Procedure, as amended in October, 1999, notice is hereby given that the Federal Accounting Standards Advisory Board (FASAB) will meet on Wednesday, February 27 and Thursday, February 28, 2002, in room 7C13 of the GAO Building.

The purpose of the meeting is to discuss issues related to:

—National Defense PP&E,
—Consolidated Financial Reporting,
—Trust Fund Disclosures,
—Stewardship Reporting, and
—Technical Agenda

A more detailed agenda can be obtained from the FASAB Web site (*http://www.fasab.gov/* one week prior to each meeting.

Following the February meeting, the schedule for the next five meetings of the Board is as follows:

—Tuesday and Wednesday, April 23 and 24, 2002;
—Tuesday and Wednesday, June 18 and 19, 2002;
—Wednesday and Thursday, August 7 and 8, 2002;
—Wednesday and Thursday, October 9 and 10, 2002;
Thursday and Friday, December 11 and 12, 2002.

The purpose of these meetings will be to discuss issues related to:

—Stewardship Reporting;
—National Defense Property, Plant & Equipment;
—Accounting and Auditing Policy Committee issues; and
—Any other topics as needed.

A Steering Committee meeting of the Board's Principal Board members will be held in conjunction with each of the Board meetings. A more detailed agenda for each Board meeting can be seen on the FASAB Web site *http://www.fasab.gov/* one week prior to each meeting. Meetings will be held in room 7C13 of the GAO Building.

Any interested person may attend the meetings as an observer. Board discussion and reviews are open to the public. GAO Building security requires advance notice of your attendance. For the February meeting, please notify FASAB by February 26 of your planned attendance by calling 202–512–7350, and for the subsequent meetings one day prior to the respective meeting.

FOR FURTHER INFORMATION CONTACT: Wendy Comes, Executive Director, 441 G St., NW., Mailstop 6K17V, Washington, DC 20548, or call (202) 512–7350.

Authority: Federal Advisory Committee Act. Pub. L. No. 92–463.

Dated: January 28, 2002.

Wendy M. Comes,

Executive Director.

[FR Doc. 02–2527 Filed 1–31–02; 8:45 am]

BILLING CODE 1610–01–M

FEDERAL COMMUNICATIONS COMMISSION

Notice of Public Information Collection(s) Being Reviewed by the Federal Communications Commission

January 23, 2002.

SUMMARY: The Federal Communications Commission, as part of its continuing effort to reduce paperwork burden, invites the general public and other Federal agencies to take this opportunity to comment on the following information collection(s), as required by the Paperwork Reduction Act of 1995, Pub. L. 104–13. An agency may not conduct or sponsor a collection of information unless it displays a currently valid control number. No person shall be subject to any penalty for failing to comply with a collection of information subject to the Paperwork Reduction Act (PRA) that does not display a valid control number. Comments are requested concerning (a) whether the proposed collection of information is necessary for the proper performance of the functions of the Commission, including whether the information shall have practical utility; (b) the accuracy of the Commission's burden estimate; (c) ways to enhance the quality, utility, and clarity of the information collected; and (d) ways to minimize the burden of the collection of information on the respondents, including the use of automated collection techniques or other forms of information technology.

DATES: Written comments should be submitted on or before March 4, 2002. If you anticipate that you will be submitting comments, but find it difficult to do so within the period of time allowed by this notice, you should advise the contact listed below as soon as possible.

ADDRESSES: Direct all comments to Judy Boley, Federal Communications Commission, Room 1–C804, 445 12th Street, SW, DC 20554 or via the Internet to *jboley@fcc.gov.*

FOR FURTHER INFORMATION CONTACT: For additional information or copies of the information collection(s), contact Judy Boley at 202–418–0214 or via the Internet at *jboley@fcc.gov.*

SUPPLEMENTARY INFORMATION:

OMB Control No.: 3060–0848.

Title: Deployment of Wireline Services Offering Advanced Telecommunications Capability, CC Docket 98–147.

Form No.: N/A.

Type of Review: Extension of currently approved collection.

Respondents: Business or other for-profit.

Number of Respondents: 1,750.

Estimated Time Per Response: 94.62 hour (average).

Frequency of Response: On occasion; Annual; Recordkeeping; and Third Party Disclosure reporting requirements.

Total Annual Burden: 165,600 hours.

Total Annual Cost: $0.

Needs and Uses: In the Fourth Report and Order issued in CC Docket No. 98–147, the Commission requires a certification of interstate traffic for certain collocating carriers and the provision of a detailed description of available collocation space from incumbent local exchange carriers in certain circumstances. The requirements implement section 706 of the Communications Act of 1934, as amended, to promote deployment of advanced services without significantly degrading the performance of other services.

Federal Communications Commission.

William F. Caton,

Acting Secretary.

[FR Doc. 02–2463 Filed 1–31–02; 8:45 am]

BILLING CODE 6712–01–P

FEDERAL COMMUNICATIONS COMMISSION

Notice of Public Information Collection(s) Being Reviewed by the Federal Communications Commission for Extension Under Delegated Authority, 5 CFR Part 1320 Authority, Comments Requested

January 23, 2002.

SUMMARY: The Federal Communications Commission, as part of its continuing effort to reduce paperwork burden, invites the general public and other Federal agencies to take this opportunity to comment on the following information collection(s), as required by the Paperwork Reduction Act of 1995, Pub. L. 104–13. An agency may not conduct or sponsor a collection of information unless it displays a currently valid control number. No person shall be subject to any penalty for failing to comply with a collection of information subject to the Paperwork Reduction Act (PRA) that does not display a valid control number. Comments are requested concerning (a) whether the proposed collection of information is necessary for the proper performance of the functions of the Commission, including whether the information shall have practical utility; (b) the accuracy of the Commission's burden estimate; (c) ways to enhance the quality, utility, and clarity of the information collected; and (d) ways to minimize the burden of the collection of information on the respondents, including the use of automated collection techniques or other forms of information technology.

DATES: Persons wishing to comment on this information collection should submit comments on or before April 2, 2002.

ADDRESSES: Direct all comments to Les Smith, Federal Communications Commissions, Room 1–A804, 445 12th Street, SW, Washington, DC 20554 or via the Internet to *lesmith@fcc.gov.*

FOR FURTHER INFORMATION CONTACT: For additional information or copies of the information collections contact Les Smith at 202–418–0217 or via the Internet at *lesmith@fcc.gov.*

SUPPLEMENTARY INFORMATION: *OMB Control Number:* 3060–0841.

Title: Public Notice—Additional Processing Guidelines for DTV (nonchecklist applications).

Form Numbers: FCC 301/340.

Type of Review: Extension of currently approved collection.

Respondents: Businesses or other for-profit entities; Not-for-profit institutions.

Number of Respondents: 100.

Estimated Time Per Response: 3 hours.

Frequency of Response: On occasion reporting requirements.

Total Annual Burden: 300 hours.

Total Annual Cost: $360,000.

Needs and Uses: The FCC released a public notice on August 10, 1998 that explained how ''nonchecklist'' applications, i.e., applications that do not conform to certain criteria to enable ''fast-track processing,'' would be processed for DTV station construction permits. This public notice explained what should be included in engineering showings and other types of application exhibits and cover letters. The public notice for ''nonchecklist'' applications should help to resolve processing uncertainties, enable the preparation of complete and quality applications, and hasten the authorization of DTV service. The FCC staff will use these data to ensure that interference to other DTV and NTSC stations is minimized.

OMB Control Number: 3060–1001.

Title: Application for Extension of Time to Construct a Digital Television Broadcast Station.

Form Number: FCC 337.

Type of Review: Extension of currently approved collection.

Respondents: Businesses or other for-profit, not-for-profit institutions.

Number of Respondents: 600.

Estimated Hours Per Response: 1.5 to 4 hours.

Frequency of Response: On occasion reporting requirements.

Total Annual Burden: 400 hours.

Total Annual Cost: $79,006.

Needs and Uses: FCC Form 337 is used by permittees to apply for an extension of time within which to construct a commercial or noncommercial educational digital television station (DTV). The FCC uses the data to determine, on a case-by-case basis, whether a broadcaster should be afforded additional time to construct its DTV facilities. In addition, analog TV licensees may request special temporary authority (STA) to construct more minimal initial DTV facilities than those specified in an outstanding construction permit. The STA data are used by the FCC to determine whether the DTV permittee has constructed and is operating with the minimum initial DTV facilities sufficient to meet its construction deadline.

Federal Communications Commission.

William F. Caton,

Acting Secretary.

[FR Doc. 02–2464 Filed 1–31–02; 8:45 am]

BILLING CODE 6712–01–P

FEDERAL COMMUNICATIONS COMMISSION

Public Information Collections Approved by Office of Management and Budget

January 25, 2002.

The Federal Communications Commission (FCC) has received Office of Management and Budget (OMB) approval for the following public information collections pursuant to the Paperwork Reduction Act of 1995, Pub. L. 104–13. An agency may not conduct or sponsor and a person is not required to respond to a collection of information unless it displays a currently valid control number. For further information contact Shoko B. Hair, Federal Communications Commission, (202) 418–1379.

Federal Communications Commission

OMB Control No.: 3060–0787.

Expiration Date: 07/31/2002.

Title: Implementation of the Subscriber Carrier Selection Changes Provisions of the Telecommunications Act of 1996; Policies and Rules Concerning Unauthorized Changes of Consumers Long Distance.

Form No.: FCC Form 478.

Respondents: Business or other for-profit.

Estimated Annual Burden: 1850 respondents; 14 hour per response (avg.) (7 hours per filing); 25,900 total annual burden hours. (Estimates for FCC Form 478 requirements only).

Estimated Annual Reporting and Recordkeeping Cost Burden: $0.

Frequency of Response: Semi-Annual; Recordkeeping.

Description: Section 258 of the Communications Act of 1934 (Act), as amended by the Telecommunications Act of 1996, makes it unlawful for any telecommunications carrier to ''submit or execute a change in a subscriber's selection of a provider of telecommunications exchange service or telephone toll service except in accordance with such verification procedures as the Commission shall prescribe.'' The section further provides that any telecommunications carrier that violates such verification procedures and that collects charges for telephone exchange service or telephone toll service from a subscriber shall be liable to the carrier previously selected by the subscriber in an amount equal to all charges paid by the subscriber after such violation. The rules and requirements implementing section 258 can be found primarily at 47 CFR part 64. FCC Form 478, Telecommunications Slamming Complaint Reporting Form, is mandated

by 47 CFR 64.1180. Pursuant to Section 64.1180(a), each provider of telephone exchange and/or telephone toll service shall submit to the Commission via e-mail (*slamming478@fcc.gov*), U.S. Mail, or facsimile a slamming complaint reporting form identifying the number of slamming complaints received during the reporting period and other information as specified in subsection (b) of section 64.1180. *See* 47 CFR 64.1180. Carriers are required to complete and file a copy of the FCC Form 478. Carriers are encouraged to maintain all records regarding slamming complaints for at least 24 month from the date on which they receive written, electronic, or oral contact by a consumer alleging that an unauthorized change in his/her preferred carrier was made by the carrier or by another carrier. The Commission recently revised FCC Form 478 to clarify for carriers the requirements of the form. Among other things, the instructions in Block 3 and Block 4 have been clarified so that carriers count complaints on a per-customer basis rather than a per-line basis. To the extent a carrier cannot report its complaints on a per-customer basis, the carrier is asked to explain the methodology it has chosen to count the complaints, and why it has chosen that methodology. In addition, FCC Form 478 instructions at Lines 112, 113 and 114 were amended to clarify when a complaint should be considered resolved under the Commission's rules. The information will be used to implement section 258 of the Act. The information will strengthen the ability of our rules to deter slamming, while protecting consumers from carriers that may take advantage of consumer confusion over different types of telecommunications services. The information gathered in response to the reporting requirement will enable the Commission to identify, as soon as possible, the carriers that repeatedly initiate unauthorized changes. A copy of the revised FCC Form 478 may be downloaded from the Commission's forms Web page, *www.fcc.gov/formpage.html*. Obligation to respond: Mandatory.

Public reporting burden for the collections of information are as noted above. Send comments regarding the burden estimates or any other aspect of the collections of information, including suggestions for reducing the burden to Performance Evaluation and Records Management, Washington, DC 20554.

Federal Communications Commission.

William F. Caton,

Acting Secretary.

[FR Doc. 02–2465 Filed 1–31–02; 8:45 am]

BILLING CODE 6712–01–P

FEDERAL DEPOSIT INSURANCE CORPORATION

Sunshine Act Meeting

Pursuant to the provisions of the ''Government in the Sunshine Act'' (5 U.S.C. 552b), notice is hereby given that at 10:11 a.m. on Tuesday, January 29, 2002, the Board of Directors of the Federal Deposit Insurance Corporation met in closed session to consider matters relating to the Corporation's personnel, supervisory, and resolution activities.

In calling the meeting, the Board determined, on motion of Director John M. Reich (Appointive), seconded by Director John D. Hawke, Jr. (Comptroller of the Currency), and concurred in by Director James E. Gilleran (Director, Office of Thrift Supervision), and Chairman Donald E. Powell, that Corporation business required its consideration of the matters on less than seven days' notice to the public; that no earlier notice of the meeting was practicable; that the public interest did not require consideration of the matters in a meeting open to public observation; and that the matters could be considered in a closed meeting by authority of subsections (c)(2), (c)(4), (c)(6), (c)(8), (c)(9)(A)(ii), and (c)(9)(B) of the ''Government in the Sunshine Act'' (5 U.S.C. 552b(c)(2), (c)(4), (c)(6), (c)(8), (c)(9)(A)(ii), and (c)(9)(B)).

The meeting was held in the Board Room of the FDIC Building located at 550–17 Street, NW., Washington, DC.

Dated: January 29, 2002.

Federal Deposit Insurance Corporation.

James D. LaPierre,

Deputy Executive Secretary.

[FR Doc. 02–2585 Filed 1–30–02; 11:28 am]

BILLING CODE 6714–01–M

FEDERAL RESERVE SYSTEM

Change in Bank Control Notices; Acquisition of Shares of Bank or Bank Holding Companies

The notificants listed below have applied under the Change in Bank Control Act (12 U.S.C. 1817(j)) and § 225.41 of the Board's Regulation Y (12 CFR 225.41) to acquire a bank or bank holding company. The factors that are considered in acting on the notices are set forth in paragraph 7 of the Act (12 U.S.C. 1817(j)(7)).

The notices are available for immediate inspection at the Federal Reserve Bank indicated. The notices also will be available for inspection at the office of the Board of Governors. Interested persons may express their views in writing to the Reserve Bank indicated for that notice or to the offices of the Board of Governors. Comments must be received not later than February 15, 2002.

A. Federal Reserve Bank of Atlanta (Cynthia C. Goodwin, Vice President) 1000 Peachtree Street, N.E., Atlanta, Georgia 30309–4470:

1. Mr. Scott Manship Niswonger. Greeneville, Tennessee; to acquire voting shares of PCB Bancorp, Inc., Johnson City, Tennessee, and thereby indirectly acquire voting shares of People's Community Bank, Johnson City, Tennessee.

B. Federal Reserve Bank of Chicago (Phillip Jackson, Applications Officer) 230 South LaSalle Street, Chicago, Illinois 60690–1414:

1. John T. Dancer, Sun City West, Arizona; to retain voting shares of Stockbridge Bancorporation, Inc., Stockbridge, Michigan, and thereby indirectly retain voting shares of Stockbridge State Bank, Stockbridge, Michigan.

Board of Governors of the Federal Reserve System, January 28, 2002.

Robert deV. Frierson,

Deputy Secretary of the Board.

[FR Doc. 02–2433 Filed 1–31–02; 8:45 am]

BILLING CODE 6210–01–S

FEDERAL RESERVE SYSTEM

Formations of, Acquisitions by, and Mergers of Bank Holding Companies

The companies listed in this notice have applied to the Board for approval, pursuant to the Bank Holding Company Act of 1956 (12 U.S.C. 1841 *et seq.*) (BHC Act), Regulation Y (12 CFR Part 225), and all other applicable statutes and regulations to become a bank holding company and/or to acquire the assets or the ownership of, control of, or the power to vote shares of a bank or bank holding company and all of the banks and nonbanking companies owned by the bank holding company, including the companies listed below.

The applications listed below, as well as other related filings required by the Board, are available for immediate inspection at the Federal Reserve Bank indicated. The application also will be available for inspection at the offices of the Board of Governors. Interested

persons may express their views in writing on the standards enumerated in the BHC Act (12 U.S.C. 1842(c)). If the proposal also involves the acquisition of a nonbanking company, the review also includes whether the acquisition of the nonbanking company complies with the standards in section 4 of the BHC Act (12 U.S.C. 1843). Unless otherwise noted, nonbanking activities will be conducted throughout the United States. Additional information on all bank holding companies may be obtained from the National Information Center website at www.ffiec.gov/nic/.

Unless otherwise noted, comments regarding each of these applications must be received at the Reserve Bank indicated or the offices of the Board of Governors not later than February 25, 2002.

A. Federal Reserve Bank of Chicago (Phillip Jackson, Applications Officer) 230 South LaSalle Street, Chicago, Illinois 60690–1414:

*1. Grant County State Bancshares, Inc., Employees Stock Ownership Plan,*Swayzee, Indiana; to acquire and additional 1.29 percent, for a total of 33.28 percent of the voting shares of Grant County State Bancshares, Inc., Swayzee, Indiana, and thereby indirectly acquire additional shares of Grant County State Bank, Swayzee, Indiana.

Board of Governors of the Federal Reserve System, January 28, 2002.

Robert deV. Frierson,

Deputy Secretary of the Board.

[FR Doc. 02–2432 Filed 1–31–02; 8:45 am]

BILLING CODE 6210–01–S

FEDERAL RESERVE SYSTEM

Formations of, Acquisitions by, and Mergers of Bank Holding Companies

The companies listed in this notice have applied to the Board for approval, pursuant to the Bank Holding Company Act of 1956 (12 U.S.C. 1841 *et seq.*) (BHC Act), Regulation Y (12 CFR Part 225), and all other applicable statutes and regulations to become a bank holding company and/or to acquire the assets or the ownership of, control of, or the power to vote shares of a bank or bank holding company and all of the banks and nonbanking companies owned by the bank holding company, including the companies listed below.

The applications listed below, as well as other related filings required by the Board, are available for immediate inspection at the Federal Reserve Bank indicated. The application also will be available for inspection at the offices of the Board of Governors. Interested persons may express their views in writing on the standards enumerated in the BHC Act (12 U.S.C. 1842(c)). If the proposal also involves the acquisition of a nonbanking company, the review also includes whether the acquisition of the nonbanking company complies with the standards in section 4 of the BHC Act (12 U.S.C. 1843). Unless otherwise noted, nonbanking activities will be conducted throughout the United States. Additional information on all bank holding companies may be obtained from the National Information Center website at www.ffiec.gov/nic/.

Unless otherwise noted, comments regarding each of these applications must be received at the Reserve Bank indicated or the offices of the Board of Governors not later than February 28, 2002.

A. Federal Reserve Bank of New York (Betsy Buttrill White, Senior Vice President) 33 Liberty Street, New York, New York 10045–0001:

1. United National Bancorp, Bridgewater, New Jersey; to merge with Vista Bancorp, Inc., and thereby indirectly acquire Visa Bank, N.A., both of Phillipsburg, New Jersey.

B. Federal Reserve Bank of Minneapolis (Julie Stackhouse, Vice President) 90 Hennepin Avenue, Minneapolis, Minnesota 55480–0291:

1. Border Bancshares, Inc., Greenbush, Minnesota; to acquire at least 80 percent of the voting shares of Northern Plains Bancshares, Inc., Thief River Falls, Minnesota. and thereby indirectly acquire First National Bank, Thief River Falls, Minnesota.

Board of Governors of the Federal Reserve System, January 29, 2002.

Robert deV. Frierson,

Deputy Secretary of the Board.

[FR Doc. 02–2526 Filed 1–31–02; 8:45 am]

BILLING CODE 6210–01–S

FEDERAL TRADE COMMISSION

[File No. 012 3214]

Eli Lilly and Co.; Analysis to Aid Public Comment

AGENCY: Federal Trade Commission.

ACTION: Proposed Consent Agreement.

SUMMARY: The consent agreement in this matter settles alleged violations of federal law prohibiting unfair or deceptive acts or practices or unfair methods of competition. The attached Analysis to Aid Public Comment describes both the allegations in the draft complaint that accompanies the consent agreement and the terms of the consent order—embodied in the consent agreement—that would settle these allegations.

DATES: Comments must be received on or before February 19, 2002.

ADDRESSES: Comments filed in paper form should be directed to: FTC/Office of the Secretary, Room 159–H, 600 Pennsylvania Avenue, NW., Washington, DC 20580. Comments filed in electronic form should be directed to: *consentagreement@ftc.gov,* as prescribed below.

FOR FURTHER INFORMATION CONTACT: Mary K. Engle, Division of Advertising Practices, Bureau of Consumer Protection, 600 Pennsylvania Avenue, NW., Washington, DC 20580, (202) 326–3161.

SUPPLEMENTARY INFORMATION: Pursuant to section 6(f) of the Federal Trade Commission Act, 38 Stat. 721, 15 U.S.C. 46(f), and § 2.34 of the Commission's rules of practice, 16 CFR 2.34, notice is hereby given that the above-captioned consent agreement containing a consent order to cease and desist, having been filed with and accepted, subject to final approval, by the Commission, has been placed on the public record for a period of thirty (30) days. The following Analysis to Aid Public Comment describes the terms of the consent agreement, and the allegations in the complaint. An electronic copy of the full text of the consent agreement package can be obtained from the FTC Home Page (for January 18, 2002), on the World Wide Web, at ''http://www.ftc.gov/os/2002/01/index.htm.'' A paper copy can be obtained from the FTC Public Reference Room, Room 130–H, 600 Pennsylvania Avenue, NW., Washington, DC 20580, either in person or by calling (202) 326–2222.

Public comments are invited, and may be filed with the Commission in either paper or electronic form. Comments filed in paper form should be directed to: FTC/Office of the Secretary, Room 159–H, 600 Pennsylvania Avenue, NW., Washington, DC 20580. If a comment contains nonpublic information, it must be filed in paper form, and the first page of the document must be clearly labeled ''confidential.'' Comments that do not contain any nonpublic information may instead be filed in electronic form (in ASCII format, WordPerfect, or Microsoft Word) as part of or as an attachment to e-mail messages directed to the following e-mail box: *consentagreement@ftc.gov.* Such comments will be considered by the Commission and will be available for inspection and copying at its principal office in accordance with § 4.9(b)(6)(ii) of the Commission's rules of practice, 16 CFR 4.9(b)(6)(ii)).

Analysis of Proposed Consent Order to Aid Public Comment

The Federal Trade Commission has accepted, subject to final approval, an agreement containing a consent order from Eli Lilly and Company (''Lilly'').

The proposed consent order has been placed on the public record for thirty (30) days for receipt of comments by interested persons. Comments received during this period will become part of the public record. After thirty (30) days, the Commission will again review the agreement and the comments received, and will decide whether it should withdraw from the agreement and take appropriate action or make final the agreement's proposed order.

Lilly is a pharmaceutical company that manufactures, markets, and sells drugs, including the anti-depressant medication Prozac. To market Prozac, among other things Lilly operates the Prozac.com Web site, which the company promotes as ''Your Guide to Evaluating and Recovering from Depression.'' The Prozac.com site, like Lilly.com and several of Lilly's other product Web sites, collects personal information from visitors.

From March 2000 through June 2001, Lilly offered through Prozac.com a service called ''Medi-Messenger,'' which enabled its subscribers to receive individualized email reminders from Lilly concerning their Prozac medication or other matters. On June 27, 2001, Lilly sent a form email to subscribers to the service, which disclosed all of the subscribers' email addresses to each individual subscriber by including all of their addresses within the ''To:'' entry of the message.

This matter concerns allegedly false or misleading representations, made through Lilly's privacy policies and during the sign-up process for Medi-Messenger. The Commission's proposed complaint alleges that Lilly claimed that it employs measures and takes steps appropriate under the circumstances to maintain and protect the privacy and confidentiality of personal information obtained from or about consumers through its Prozac.com and Lilly.com Web sites, when in fact Lilly had not employed such measures and had not taken such steps.

As set forth in the complaint, Lilly's unintentional June 27th disclosure of Medi-Messenger subscribers' personal information (*i.e.,* email addresses) resulted from its failure to maintain or implement internal measures appropriate under the circumstances to protect sensitive consumer information. For example, Lilly failed to provide appropriate training for its employees regarding consumer privacy and information security; failed to provide appropriate oversight and assistance for the employee who sent out the email, who had no prior experience in creating, testing, or implementing the computer program used; and failed to implement appropriate checks and controls on the process, such as reviewing the computer program with experienced personnel and pretesting the program internally before sending out the email. Lilly's failure to implement appropriate measures also violated certain of its own written policies.

The proposed consent order contains provisions designed to prevent Lilly from engaging in similar acts and practices in the future.

The proposed order applies to the collection of personal information from or about consumers in connection with the advertising, marketing, offering for sale, or sale of any pharmaceutical, medical, or other health-related product or service by Lilly's USA division.

Part I of the proposed order prohibits misrepresentations regarding the extent to which Lilly maintains and protects the privacy or confidentiality of any personally identifiable information collected from or about consumers.

Part II of the proposed order requires Lilly to implement a four-stage information security program designed to establish and maintain reasonable and appropriate administrative, technical, and physical safeguards to protect consumers' personal information against any reasonably anticipated threats or hazards to its security, confidentiality, or integrity, and to protect such information against unauthorized access, use, or disclosure. Specifically, Part II requires Lilly to:

- Designate appropriate personnel to coordinate and oversee the program;
- Identify reasonably foreseeable internal and external risks to the security, confidentiality, and integrity of personal information, including any such risks posed by lack of training, and to address these risks in each relevant area of its operations, whether performed by employees or agents, including: (i) management and training of personnel; (ii) information systems for the processing, storage, transmission, or disposal of personal information; and (iii) prevention and response to attacks, intrusions, unauthorized access, or other information systems failures;
- Conduct an annual written review by qualified persons, within ninety (90) days after the date of service of the order and yearly thereafter, which review shall monitor and document compliance with the program, evaluate the program's effectiveness, and recommend changes to it; and
- Adjust the program in light of any findings and recommendations resulting from reviews or ongoing monitoring, and in light of any material changes to Lilly's operations that affect the program.

Parts III through VI of the proposed order are reporting and compliance provisions. Part III requires Lilly's retention of materials relating to its privacy and security representations and to its compliance with the order's information security program. Part IV requires dissemination of the order now and in the future to persons with responsibilities relating to the subject matter of the order. Part V ensures notification to the FTC of changes in corporate status. Part VI mandates compliance reports, including a copy of the initial annual review required by Part II.C within one hundred and twenty (120) days after service of the order. Part VII is a provision ''sunsetting'' the order after twenty (20) years, with certain exceptions.

The purpose of this analysis is to facilitate public comment on the proposed order. It is not intended to constitute an official interpretation of the agreement and proposed order or to modify their terms in any way.

By direction of the Commission.

Donald S. Clark,

Secretary.

Concurring Statement of Commissioner Orson Swindle

I am pleased with the consent agreement that the Commission has reached with Eli Lilly and Company. Lilly's unfortunate and unintended disclosure of prescription drug users' personal information has given us all the opportunity to evaluate how to improve upon security practices for confidential information. Lilly should be respected for its long-standing efforts in development of its privacy practices, its acceptance of responsibility for the internal failures that resulted in the alleged violation of its privacy policy, and its willingness to take appropriate steps to correct those mistakes. I appreciate the company's leadership in cooperating with us to improve its security measures, and I believe the firm will fully carry out its commitments under the proposed order. Lilly's responsiveness and its efforts to improve corporate privacy practices can be a model for others to follow.

[FR Doc. 02–2435 Filed 1–31–02; 8:45 am]

BILLING CODE 6750–01–P

DEPARTMENT OF HEALTH AND HUMAN SERVICES

Office of the Secretary

Notice of Interest Rate on Overdue Debts

Section 30.13 of the Department of Health and Human Services' claims collection regulations (45 CFR part 30) provides that the Secretary shall charge an annual rate of interest as fixed by the Secretary of Treasury after taking into consideration private consumer rates of interest prevailing on the date that HHS becomes entitled to recovery. The rate generally cannot be lower than the Department of Treasury's current value of funds rate or the applicable rate determined from the ''Schedule of Certified Interest Rates with Range of Maturities.'' This rate may be revised quarterly by the Secretary of the Treasury and shall be published quarterly by the Department of Health and Human Services in **Federal Register**.

The Secretary of the Treasury has certified a rate of 12 5/8% for the quarter ended December 31, 2001. This interest rate will remain in effect until such time as the Secretary of the Treasury notifies HHS of any change.

Dated: January 24, 2002.

George Strader,

Deputy Assistant Secretary, Finance.

[FR Doc. 02–2455 Filed 1–31–02; 8:45 am]

BILLING CODE 4150–04–M

DEPARTMENT OF HEALTH AND HUMAN SERVICES

Meeting of the President's Council on Bioethics

AGENCY: President's Council on Bioethics, HHS.

ACTION: Notice of public meeting.

SUMMARY: The President's Council on Bioethics will hold its second meeting to discuss its agenda and future activities.

DATES: The meeting will take place February 13, 2002, from 8:30 am to 5:30 pm and February 14, 2002, from 8:30 am to 1:00 pm.

ADDRESSES: The meeting location is Loews L'Enfant Plaza Hotel at 480 L'Enfant Plaza, SW., Washington, DC.

FOR FURTHER INFORMATION CONTACT: Ms. Deborah McMahon, President's Council on Bioethics, Sixth Floor, 1801 Pennsylvania Avenue, NW., Washington, DC 20006. 202/296–4694.

SUPPLEMENTARY INFORMATION: The President's Council on Bioethics is a presidential advisory committee charged, among other things, with conducting fundamental inquiry into the moral and human meaning of developments in biomedical science and technology. Included in its discussions at the Council's second meeting will be the ethics of human cloning and recent National Academy of Sciences' report on cloning.

Dated: January 28, 2002.

Dean Clancy,

Executive Director, President's Council on Bioethics.

[FR Doc. 02–2430 Filed 1–31–02; 8:45 am]

BILLING CODE 4110–60–P

DEPARTMENT OF HEALTH AND HUMAN SERVICES

Office of the Secretary

Privacy Act of 1974; Revision to Existing System of Records

AGENCY: Employee Assistance Program, Office of the Assistant Secretary for Administration and Management, Office of the Secretary, HHS.

ACTION: Notice of revision of Privacy Act Systems of Records.

SUMMARY: In accordance with the Privacy Act, HHS is giving notice that it is revising one of its system of records, 09–90–0010, Employee Assistance Program, HHS/OS/ASAM. It was most recently published on March 7, 1997. The notice is being revised to modify certain procedures and update the list of system managers. Records in this system contain information on employees and their family members who have used the services of the Employee Assistance Program (EAP). It also contains information on employees and their family members from other Federal agencies that are contracting with HHS EAPs.

EFFECTIVE DATE: This revision substantially modifies the language of this system of records by adding a new routine use. In addition to the above change, some minor revisions have been made to clarify and update procedures and other information. The modified language will take effect unless comments are received that result in a different conclusion. Other aspects of this amendment are effective on February 1, 2002.

FOR FURTHER INFORMATION CONTACT: EAP Director, Office of Human Resources, Room 5–36E, 200 Independence Avenue, SW., Washington, DC 20201. Telephone number (202) 690–8229 or (202) 690–7431

SUPPLEMENTARY INFORMATION: Record destruction procedures in the previous notice were modified to reflect new legal opinions. In addition, this notice reflects reorganization in HHS and the resulting changes to the list of system managers.

The notice is published below in its entirety, as amended.

Dated: December 17, 2001.

Roy Tucker,

Acting Deputy Assistant Secretary for Human Resources.

09–90–0010

SYSTEM NAME:

Employee Assistance Program (EPA) Records, HHS/OS/ASAM/OHR.

SYSTEM LOCATION:

Offices designated to provide counseling and/or other EAP services for employees of HHS and their family members and employees of other Federal agencies contracting with HHS for EAP services and their family members. Since there are thousands of counselors available to provide EAP services, contact the appropriate system manager in Appendix 1 for more details about specific locations.

CATEGORIES OF INDIVIDUALS COVERED BY THE SYSTEM:

This system covers the records of all HHS employees and their family members using the services of the EAP. It also covers the records of other Federal employees and their family members using the EAP through a contractual agreement between HHS and their organizations. (The remainder of this notice will refer to all persons covered by the system as ''EAP client(s)''.)

CATEGORIES OF RECORDS IN THE SYSTEM:

This system contains a written or electronic record on each EAP client. These records will contain the following information: client name, date of birth, grade, job title, home address, telephone numbers, and (when appropriate) supervisor name and telephone number. The system includes records of services provided by HHS staff as well as services provided by contractors.

Certain clinical information is also normally maintained in each record including a psychosocial history, assessment of personal concerns, information regarding referrals to facilities in the community, and all intervention outcomes. It may contain correspondence with program clients, including electronic mail and word processing applications.

If the client is referred to the EAP by a supervisor due to work performance or

conduct problems or if there is another reason to be concerned about these issues, the record may contain information such as leave usage, work quality, inappropriate behavior, and reason for referral. It may also contain information about previous and on-going supervisory/organizational interventions to correct the problem.

When the client is referred to the EAP because of a positive drug or alcohol test (as required by the drug-free workplace provisions or Department of Transportation regulations), the record will also contain information about substance abuse assessment, treatment, aftercare, and substance use monitoring results.

AUTHORITY FOR MAINTENANCE OF THE SYSTEM:

5 U.S.C. 7361, 7362, 7901, 7904; 44 U.S.C. 3101.

PURPOSE(S):

The information contained in each record is a documentation of the nature and extent of the client's concerns. This information is necessary for the clinician to formulate and implement an intervention plan for resolving the concerns. When the intervention plan includes referral(s) to treatment or other facilities outside the EAP, the record also documents this referral information.

The information contained in each record is also used for monitoring the client's progress in resolving the concern(s).

Anonymous information from each record is also used to prepare statistical reports and to conduct research that helps with program management.

ROUTIEN USES OF RECORDS MAINTAINED IN THE SYSTEM, INCLUDING CATEGORIES OF USERS AND THE PURPOSES OF SUCH USES:

(1) HHS may transfer records to contractors (e.g. private organization, individual, or other group such as an EAP consortium) for the purpose of providing EAP services for HHS employees and their family members and/or for employees of other Federal agencies and their family members.

(2) HHS may transfer records to contractors or employees of other Federal agencies for the purpose of destroying records at the end of the required period of maintenance, but only in accordance with contracts and inter-agency agreements requiring that:

(A) A witness trained in the proper handling of confidential records will be present when any records are destroyed,

(B) Records will be destroyed by shredding or burning,

(C) Records stored on hard drives will be destroyed using software tools which ensure the protection of the confidential information by making reconstruction or compromise by reuse impracticable, and

(D) Records located away from the destruction site shall be transferred to the destruction site in a confidential manner.

(3) HHS may disclose information from this system of records for litigation purposes when

(A) HHS, or any of its components, or

(B) Any HHS employee in his or her official capacity, or

(C) Any HHS employee in his or her individual capacity where the Department of Justice (or HHS, where it is authorized to do so) has agreed to represent the employee, or

(D) The United States or any agency thereof where HHS determines that the litigation is likely to affect HHS or any of its components is a party to litigation, and HHS determines that such use of records is relevant and necessary to the litigation and would help in the effective representation of the government party. The disclosure may be made to the Department of Justice. Except where the records are covered by the Confidentiality of Alcohol and Drug Abuse Patient Records regulations, 42 CFR Part 2, the disclosure may be made to a court or other tribunal, or to another party before such tribunal. Any disclosure of records covered by 42 CFR Part 2 must be pursuant to a qualified service organization agreement that meets the requirements of that part *and* must also comply with all other aspects of those regulations. The EAP Director (in ASAM) must personally approve any disclosure made under this routine use based on his or her determination that it is compatible with the purpose for which the records were collected.

(4) Records may be disclosed to student volunteers, individuals working under a personal services contract, and other individuals performing functions for the Department but technically not having the status of agency employees, if they need access to the records in order to perform their assigned agency functions.

Addendum: HHS may release statistical data (non-personal identifiers) derived from these records.

POLICIES AND PRACTICES FOR STORING, RETRIEVING, ACCESSING, RETAINING AND DISPOSING OF RECORDS IN THE SYSTEM:

STORAGE:

Records are stored in written folders, computers, and on index type cards. They are stored according to a number of physical safeguards described below.

RETRIEVABILITY:

Records are retrieved by a case code number, unique to the client utilizing the program. these numbers are cross-indexed by name.

SAFEGUARDS:

(1) *Authorized Users:* Access to these records is limited to EAP Administrators who work directly with clients of the program and their immediate staffs (including counselors, secretaries, and contract or consortia administrators, counselors or secretaries). HHS EAP Administrators and HHS EAP headquarters staff in OS/ASAM/OHR, as well as EAP Administrators and Coordinators from other Federal agencies who contract with HHS, whether or not they directly provide clinical services, may have access to the records for the purposes of program evaluation, destroying records at the end of the period of maintenance, and transferring records from one contractor to another. HHS may also contract with either a private organization or other Federal agency to destroy these records. The personnel of these record destruction organizations or agencies may have access to the records at the end of their period of maintenance for the purpose of transferring records from the EAP office to a destruction site and subsequently destroying the records.

(2) *Physical Safeguards:* All paper records are stored in metal filing cabinets equipped with at least combination locks and preferably locking crash bars. These file cabinets are in secured areas, accessible only to the EAP staff outlined above, and are locked when not in use. These records are always maintained separate from other systems of record. Computer containing records are discrete from other computer systems and/or are password protected. Computers are also stored in secured areas, accessible only to the EAP staff outlined above.

(3) *Procedural Safeguards:* All persons having access to these records shall already have been trained in the proper handling of records covered by the Privacy Act and 42 CFR Part 2 (Confidentiality of Alcohol and Drug Abuse Patient Records). These acts restrict disclosures to unique situations, such as threats of physical harm, medical emergencies, and suspected child abuse, except where the client has consented in writing to such disclosure. Clients of the EAP will be informed in writing of the confidentiality provisions. Secondary disclosure of released information is prohibited without client consent.

RETENTION AND DISPOSAL:

Records are retained until three years after the client has ceased contact with the EAP or until any litigation is finally resolved. This will be true whether or not the client has terminated employment with HHS or another agency contracting with HSS for EAP services. Individual states may require longer retention. The rules in this system notice should not be construed to authorize any violation of such state laws that have greater restrictions.

Some HHS EAPs provide Substance Abuse Professional evaluations as part of Department of Transportation regulations. These records will be retained for five years after contact with the program has ceased or any litigation is completed. Individual states may require longer retention. The rules in this system notice should not be construed to authorize any violation of such state laws that have greater restrictions.

Files will be destroyed only after the required period of maintenance, with a witness present, by either (1) an HHS EAP Administrator or an EAP Administrator from another organization that contracts with HHS for EAP services, or (2) by designated staff of a private or governmental organization under contract with HHS to provide document destruction services. The witness must be trained in the proper handling of records covered by the Privacy Act and 42 CFR part 2.

Written records will be destroyed by shredding or burning. Records stored on hard drives will be destroyed using software tools which ensure the protection of the confidential information by making reconstruction or compromise by reuse impracticable. Records contained on back-up tapes/diskettes will be disposed by either physically destroying the tapes/diskettes or be deleting them using software tools which ensure the protection of the confidential information by making reconstruction or compromise by reuse impracticable.

Records located away from the destruction site shall be transferred to the destruction site in the confidential manner required by HHS and GSA policies. The name and case coding number of the destroyed record will be maintained on a list of other destroyed records. No other information about EAP clients may be maintained once these files have been destroyed.

SYSTEM MANAGERS AND ADDRESSES:

The EAP records of HHS employees and their family members are managed by the EAP Administrators in the various regional and headquarters offices (Appendix 1). The EAP records of employees from other organizations contracting with HHS and their family members are managed by EAP administrators designated in their agreements with HHS.

NOTIFICATION PROCEDURES:

If an HHS employee and/or family member wishes to inquire about his or her record, a written inquiry should be addressed to the HHS system manager, responsible for the area where the counseling was provided (see Appendix 1). The individual should provide his or her name, organization where employed, date of birth, location of counseling, and approximate date of counseling. If a third party is making the request, a written consent from the client must accompany the request.

If an inquiry is made from an employee and/or family member from another Federal agency serviced by the HHS EAP, a written inquiry shall be made using the same procedures described above. It should be addressed to the HHS contact person found in Appendix A. If the contract to obtain services from HHS has terminated, the request should be made through the designated EAP representative at the other Federal agency.

In some limited situations, an EAP record is considered a medical record. A client requesting notification or access to a medical record shall, at the time the request is made, designate in writing a responsible individual who would be willing to review the record. Upon receiving a request, the EAP system manager shall weigh the need for disclosure against the potential injury to the EAP client, to other affected persons, to the physician-patient relationship, and to the treatment services. The EAP manager will then determine whether to disclose the record directly to the client or to the designated individual. If disclosed to the designated individual, he or she will inform the client of its content but only at his or her discretion.

RECORD ACCESS PROCEDURES:

Same as notification procedures. Requestors should also reasonably specify the record contents being sought.

CONTESTING RECORD PROCEDURES:

Contact the EAP Administrator at the address found in Appendix 1, and reasonably identify the record and specify the information to be contested. State the corrective action sought and the reasons for the correction.

RECORD SOURCE CATEGORIES:

Information in this system of records is: (1) Supplied directly by the individual using the program, or (2) supplied by a member of the employee's family, or (3) derived from information supplied by the employee, or (4) supplied by sources to/from whom the individual has been referred for assistance, or (5) supplied by Department officials (including drug testing officers), or (6) supplied by EAP counselors, or (7) supplied by other sources involved with the case.

SYSTEMS EXEMPTED FROM CERTAIN PROVISIONS OF THE ACT:

None.

Appendix 1

All HHS Regional Offices and Those in the Rockville, MD; Hyattsville, MD; and College Park, MD Areas

(except those listed below) and any other office not listed here

Employee Assistance Program Director, Office of the Secretary, ASAM, 200 Independence Avenue, SW., Room 5–36E, Washington, DC 20201.

Centers for Disease Control and Prevention

(offices in the Atlanta, GA area)

CDC Employee Assistance Program Administrator, Personnel Management Office, 1600 Clifton Road, NE., Mail Stop F05, Atlanta, GA 30333.

Southwest DC Complex

Employee Assistance Program Administrator, Program Support Center, 330 C Street, SW., Room 1250, Washington, DC 20201.

Centers for Medicare and Medicaid Services

(all locations)

HCFA Employee Assistance Program Administrator, 7500 Security Boulevard, S1–23–27, Baltimore, MD 21244.

National Institutes of Health

(headquarters location)

NIH Employee Assistance Program Administrator, Building 31, Room 1C02, 9000 Rockville Pike, Bethesda, MD 20892.

All Other Organizations Contracting With HHS

Program Support Center, Federal Occupational Health, Employee Assistance Program, Two Illinois Center, 233 North Michigan Avenue, Suite 270, Chicago, IL 60601–5519.

[FR Doc. 02–2456 Filed 1–31–02; 8:45 am]

BILLING CODE 41550–04–M

DEPARTMENT OF HEALTH AND HUMAN SERVICES

Office for Civil Rights; Title VI of the Civil Rights Act of 1964; Policy Guidance on the Prohibition Against National Origin Discrimination as It Affects Persons With Limited English Proficiency

AGENCY: Office for Civil Rights (OCR), HHS.

ACTION: Notice of republication of policy guidance with request for comment.

SUMMARY: The United States Department of Health and Human Services (HHS) is republishing for comment policy guidance on Title VI's prohibition against national origin discrimination as it affects limited English proficient (LEP) persons.

DATES: The guidance was effective August 30, 2000. Comments must be submitted on or before April 2, 2002. OCR will review all comments and will determine what modifications to the policy guidance, if any, are necessary.

ADDRESSES: Comments should be addressed to Deeana Jang with ''Attention: LEP Comments,'' and should be sent to 200 Independence Avenue, SW. Room 506F, Washington, DC 20201. Comments may also be submitted by e-mail at *LEP.comments@hhs.gov.*

FOR FURTHER INFORMATION CONTACT: Deeana Jang or Ronald Copeland at the Office for Civil Rights, Room 506F, U.S. Department of Health and Human Services, 200 Independence Avenue, SW., Washington, DC 20201, addressed with ''Attention: LEP Comments;'' telephone toll-free number: 1–866–OCR–7748, or 202–619–0553; TDD: toll-free 1–800–537–7697. Arrangements to receive the policy in an alternative format may be made by contacting the named individuals.

SUPPLEMENTARY INFORMATION: The United States Department of Health and Human Services (HHS) is republishing for comment the policy guidance, ''Title VI Prohibition Against National Origin Discrimination As It Affects Persons With Limited English Proficiency'' (the ''guidance''). This guidance was originally published on August 30, 2000, and included a 60-day comment period. 65 FR 52762. However, pursuant to a memorandum issued by the United States Department of Justice on October 26, 2001, HHS is republishing this guidance and inviting public comment on the guidance. The United States Department of Justice memorandum is attached and can be found at: *http://www.usdoj.gov/crt/cor/lep/Oct26Memorandum.htm.*

The Secretary is interested in comments on all aspects of the guidance, including comments on the issues listed below. If you are raising a concern, please be as specific as possible.

(1) Have persons with limited English proficiency seeking health care or social services benefitted as a result of the guidance? If so, what have been the benefits? Please be specific about your experiences.

(2) Have persons with limited English proficiency faced challenges or problems in accessing health care or social services following issuance of the guidance? If so, what have been the challenges or problems? Please be specific about your experiences.

(3) Have health care or social services providers faced challenges or problems in providing these services to persons with limited English proficiency as a result of the guidance? If so, what have been the challenges or problems? Please be specific about your experiences. The Secretary is particularly interested in the experiences of small providers.

(4) Are there areas of the guidance that you believe need to be clarified or modified? If so, please explain what areas, why the area(s) need clarification or modification, and provide any suggestions for clarification or modification.

(5) Has the guidance been effective in identifying reasonable ways of providing services to individuals with limited English proficiency? What are some of the cost-effective ways that are used successfully to provide services for persons with limited English proficiency that are not included in the guidance? Again, the Secretary is particularly interested in the experiences of small providers.

(6) What technical assistance from the Office for Civil Rights (OCR) and other components of HHS would be most helpful to recipients/covered entities?

(7) In providing services to persons with limited English proficiency, what costs have health care or social services providers incurred in providing translation, interpreter, or other language services? Please be specific about your experiences. The Secretary is particularly interested in the experiences of small providers. If health care or social services providers have not yet provided translation, interpreter or other language services for persons with limited English proficiency, what costs are anticipated? Please provide the basis for your estimate.

(8) Some may assert that the guidance has materially assisted in achieving the goal of access to health or social services by limited English proficient individuals. Others may assert that the guidance has unintentionally had the opposite effect. Is there actual experience to support either view? Please describe.

(9) Based on your experience, does the guidance and/or OCR's application of the guidance in practice, strike the right balance with respect to the factors enunciated in the Department of Justice's October 26, 2001 memorandum: (1) The number or proportion of limited English proficient persons, (2) the frequency of contact with the program, (3) the nature and importance of the program, and (4) the resources available? Please note that these factors are discussed in greater detail in the Department of Justice memorandum. In particular, in considering the resources available, does the guidance and/or OCR's application of the guidance adequately factor in the costs of providing translation, interpreter or other language services to limited English proficient individuals, as well as the resources available to the recipient/covered entity?

The Department welcomes comments from the public on these and any other issues related to the guidance. Even if you have commented before on the guidance, you may have additional comments. In accordance with the instructions from the Department of Justice, the Department will review the guidance in light of the public comments received and the Department of Justice memorandum, and will determine what modifications to the guidance, if any, are necessary.

The text of the complete guidance document, including appendices, appears below.

Dated: January 28, 2002.

Robinsue Frohboese,

Principal Deputy and Acting Director, Office for Civil Rights.

Policy Guidance—Title VI Prohibition Against National Origin Discrimination as It Affects Persons With Limited English Proficiency

A. Background

English is the predominant language of the United States. According to the 1990 Census, English is spoken by 95% of its residents. Of those U.S. residents who speak languages other than English at home, the 1990 Census reports that 57% above the age of four speak English ''well to very well.''

The United States is also, however, home to millions of national origin minority individuals who are ''limited

English proficient'' (LEP). That is, they cannot speak, read, write or understand the English language at a level that permits them to interact effectively with health care providers and social service agencies. Because of these language differences and their inability to speak or understand English, LEP persons are often excluded from programs, experience delays or denials of services, or receive care and services based on inaccurate or incomplete information.

In the course of its enforcement activities, OCR has found that persons who lack proficiency in English frequently are unable to obtain basic knowledge of how to access various benefits and services for which they are eligible, such as the State Children's Health Insurance Program (SCHIP), Medicare, Medicaid or Temporary Assistance to Needy Families (TANF) benefits, clinical research programs, or basic health care and social services. For example, many intake interviewers and other front line employees who interact with LEP individuals are neither bilingual nor trained in how to properly serve an LEP person. As a result, the LEP applicant all too often is either turned away, forced to wait for substantial periods of time, forced to find his/her own interpreter who often is not qualified to interpret, or forced to make repeated visits to the provider's office until an interpreter is available to assist in conducting the interview.

The lack of language assistance capability among provider agency employees has especially adverse consequences in the area of professional staff services, such as health services. Doctors, nurses, social workers, psychologists, and other professionals provide vitally important services whose very nature requires the establishment of a close relationship with the client or patient that is based on empathy, confidence and mutual trust. Such intimate personal relationships depend heavily on the free flow of communication between professional and client. This essential exchange of information is difficult when the two parties involved speak different languages; it may be impeded further by the presence of an unqualified third person who attempts to serve as an interpreter.

Some health and social service providers have sought to bridge the language gap by encouraging language minority clients to provide their own interpreters as an alternative to the agency's use of qualified bilingual employees or interpreters. Persons of limited English proficiency must sometimes rely on their minor children to interpret for them during visits to a health or social service facility. Alternatively, these clients may be required to call upon neighbors or even strangers they encounter at the provider's office to act as interpreters or translators.

These practices have severe drawbacks and may violate Title VI of the Civil Rights Act of 1964. In each case, the impediments to effective communication and adequate service are formidable. The client's untrained ''interpreter'' is often unable to understand the concepts or official terminology he or she is being asked to interpret or translate. Even if the interpreter possesses the necessary language and comprehension skills, his or her mere presence may obstruct the flow of confidential information to the provider. This is because the client would naturally be reluctant to disclose or discuss intimate details of personal and family life in front of the client's child or a complete stranger who has no formal training or obligation to observe confidentiality.

When these types of circumstances are encountered, the level and quality of health and social services available to persons of limited English proficiency stand in stark conflict to Title VI's promise of equal access to federally assisted programs and activities. Services denied, delayed or provided under adverse circumstances have serious and sometimes life threatening consequences for an LEP person and generally will constitute discrimination on the basis of national origin, in violation of Title VI. Accommodation of these language differences through the provision of effective language assistance will promote compliance with Title VI. Moreover, by ensuring accurate client histories, better understanding of exit and discharge instructions, and better assurances of informed consent, providers will better protect themselves against tort liability, malpractice lawsuits, and charges of negligence.

Although OCR's enforcement authority derives from Title VI, the duty of health and human service providers to ensure that LEP persons can meaningfully access programs and services flows from a host of additional sources, including federal and state laws and regulations, managed care contracts, and health care accreditation organizations.[1] In addition, the duty to provide appropriate language assistance to LEP individuals is not limited to the health and human service context. Numerous federal laws require the provision of language assistance to LEP individuals seeking to access critical services and activities. For instance, the Voting Rights Act bans English-only elections in certain circumstances and outlines specific measures that must be taken to ensure that language minorities can participate in elections. *See* 42 U.S.C. Section 1973 b(f)(1). Similarly, the Food Stamp Act of 1977 requires states to provide written and oral language assistance to LEP persons under certain circumstances. 42 U.S.C. Section 2020(e)(1) and (2). These and other provisions reflect the sound judgment that providers of critical services and benefits bear the responsibility for ensuring that LEP individuals can meaningfully access their programs and services.

OCR issued internal guidance to its staff in January 1998 on a recipient's obligation to provide language assistance to LEP persons. That guidance was intended to ensure consistency in OCR's investigation of LEP cases. This current guidance clarifies for recipient/covered entities and the public, the legal requirements under Title VI that OCR has been enforcing for the past 30 years.

This policy guidance is consistent with a Department of Justice (DOJ) directive noting that recipient/covered entities have an obligation pursuant to Title VI's prohibition against national origin discrimination to provide oral and written language assistance to LEP persons.[2] It is also consistent with a government-wide Title VI regulation issued by DOJ in 1976, ''Coordination of Enforcement of Nondiscrimination in Federally Assisted Programs,'' 28 CFR part 42, subpart F, that addresses the circumstances in which recipient/covered entities must provide written language assistance to LEP persons.[3]

B. Legal Authority

1. Introduction

Over the last 30 years, OCR has conducted thousands of investigations and reviews involving language

[1] A description of these requirements is included as Appendix B to this policy guidance.

[2] The DOJ directive has been issued contemporaneously with this policy guidance.

[3] The DOJ coordination regulations at 28 CFR Section 42.405(d)(1) provide that ''[w]here a significant number or proportion of the population eligible to be served or likely to be directly affected by a federally assisted program (e.g., affected by relocation) needs service or information in a language other than English in order effectively to be informed of or to participate in the program, the recipient shall take reasonable steps, considering the scope of the program and the size and concentration of such population, to provide information in appropriate languages to such persons. This requirement applies with regard to written material of the type which is ordinarily distributed to the public.''

differences that impede the access of LEP persons to medical care and social services. Where the failure to accommodate language differences discriminates on the basis of national origin, OCR has required recipient/covered entities to provide appropriate language assistance to LEP persons. For instance, OCR has entered into voluntary compliance agreements and consent decrees that require recipients who operate health and social service programs to ensure that there are bilingual employees or language interpreters to meet the needs of LEP persons seeking services. OCR has also required these recipient/covered entities to provide written materials and post notices in languages other than English. *See Mendoza* v. *Lavine,* 412 F.Supp. 1105 (S.D.N.Y. 1976); and *Asociacion Mixta Progresista* v. *H.E.W.,* Civil Number C72–882 (N.D. Cal. 1976). The legal authority for OCR's enforcement actions is Title VI of the Civil Rights Act of 1964, the implementing regulations, and a consistent body of case law. The legal authority is described below.

2. Statute and Regulation

Section 601 of Title VI of the Civil Rights Act of 1964, 42 U.S.C. Section 2000d *et. seq.* states: ''No person in the United States shall on the ground of race, color or national origin, be excluded from participation in, be denied the benefits of, or be subjected to discrimination under any program or activity receiving Federal financial assistance.'' Regulations implementing Title VI, provide in part at 45 CFR Section 80.3 (b):

(1) A recipient under any program to which this part applies may not, directly or through contractual or other arrangements, on ground of race, color, or national origin:

(i) Deny an individual any service, financial aid, or other benefit provided under the program;

(ii) Provide any service, financial aid, or other benefit to an individual which is different, or is provided in a different manner, from that provided to others under the program;

(2) A recipient, in determining the types of services, financial aid, or other benefits, or facilities which will be provided under any such program or the class of individuals to whom, or the situations in which such services, financial aid or other benefits, or facilities will be provided * * * *may not directly, or through contractual or other arrangements, utilize criteria or methods of administration which have the effect of subjecting individuals to discrimination, because of their race, color or national origin, or have the effect of defeating or substantially impairing accomplishment of the objectives of the program with respect to individuals of a particular race, color or national origin.* (emphasis added).

3. Case Law

Extensive case law affirms the obligation of recipients of federal financial assistance to ensure that LEP persons can meaningfully access federal-assisted programs.

The U.S. Supreme Court, in *Lau* v. *Nichols,* 414 U.S. 563 (1974), recognized that recipients of Federal financial assistance have an affirmative responsibility, pursuant to Title VI, to provide LEP persons with meaningful opportunity to participate in public programs. In *Lau* v. *Nichols,* the Supreme Court ruled that a public school system's failure to provide English language instruction to students of Chinese ancestry who do not speak English denied the students a meaningful opportunity to participate in a public educational program in violation of Title VI of the Civil Rights Act of 1964.

The *Lau* decision affirmed the U.S. Department of Health, Education and Welfare's Policy Memorandum issued on May 25, 1970, titled ''Identification of Discrimination and the Denial of Services on the Basis of National Origin,'' 35 FR 11,595. The memorandum states in part: ''Where the inability to speak and understand the English language excludes national origin minority group children from effective participation in the educational program offered by a school district, the district must take affirmative steps to rectify the language deficiency in order to open its instructional program to these students.''

As early as 1926, the Supreme Court recognized that language rules were often discriminatory. In *Yu Cong Eng et.al.* v. *Trinidad, Collector of Internal Revenue,* 271 U.S. 500 (1926), the Supreme Court found that a Philippine Bookkeeping Act that prohibited the keeping of accounts in languages other than English, Spanish and Philippine dialects violated the Philippine Bill of Rights that Congress had patterned after the U.S. Constitution. The Court found that the Act deprived Chinese merchants, who were unable to read, write or understand the required languages, of liberty and property without due process.

In *Gutierrez* v. *Municipal Court of S.E. Judicial District,* 838 F.2d 1031,1039 (9th Cir. 1988), *vacated as moot,* 490 U.S. 1016 (1989), the court recognized that requiring the use of English only is often used to mask national origin discrimination. Citing McArthur, *Worried About Something Else,* 60 Int'l J. Soc. Language, 87, 90–91 (1986), the court stated that because language and accents are identifying characteristics, rules that have a negative effect on bilingual persons, individuals with accents, or non-English speakers may be mere pretexts for intentional national origin discrimination.

Another case that noted the link between language and national origin discrimination is *Garcia* v. *Gloor,* 618 F.2d 264 (5th Cir. 1980) *cert. denied,* 449 U.S. 1113 (1981). The court found that on the facts before it a workplace English-only rule did not discriminate on the basis of national origin since the complaining employees were bilingual. However, the court stated that ''to a person who speaks only one tongue or to a person who has difficulty using another language other than the one spoken in his home, language might well be an immutable characteristic like skin color, sex or place of birth.'' *Id.* At 269.

The Fifth Circuit addressed language as an impermissible barrier to participation in society in *U.S.* v. *Uvalde Consolidated Independent School District,* 625 F2d 547 (5th Cir. 1980). The court upheld an amendment to the Voting Rights Act which addressed concerns about language minorities, the protections they were to receive, and eliminated discrimination against them by prohibiting English-only elections.

Most recently, the Eleventh Circuit in *Sandoval* v. *Hagan,* 197 F. 3d 484 (11th Cir. 1999), *petition for cert. filed,* May 30, 2000, held that the State of Alabama's policy of administering a driver's license examination in English only was a facially neutral practice that had an adverse effect on the basis of national origin, in violation of Title VI. The court specifically noted the nexus between language policies and potential discrimination based on national origin. That is, in *Sandoval,* the vast majority of individuals who were adversely affected by Alabama's English-only driver's license examination policy were national origin minorities.

In the health and human service context, a recipient's failure to provide appropriate language assistance to LEP individuals parallels many of the fact situations discussed in the cases above and, as in those cases, may have an adverse effect on the basis of national origin, in violation of Title VI.

The Title VI regulations prohibit both intentional discrimination and policies and practices that appear neutral but have a discriminatory effect. Thus, a recipient/covered entity's policies or practices regarding the provision of benefits and services to LEP persons need not be intentional to be discriminatory, but may constitute a

violation of Title VI if they have an adverse effect on the ability of national origin minorities to meaningfully access programs and services. Accordingly, it is useful for recipient/covered entities to examine their policies and practices to determine whether they adversely affect LEP persons. This policy guidance provides a legal framework to assist recipient/covered entities in conducting such assessments.

C. Policy Guidance

1. Who Is Covered

All entities that receive Federal financial assistance from HHS, either directly or indirectly, through a grant, contract or subcontract, are covered by this policy guidance. Covered entities include (1) any state or local agency, private institution or organization, or any public or private individual that (2) operates, provides or engages in health, or social service programs and activities and that (3) receives federal financial assistance from HHS directly or through another recipient/covered entity. Examples of covered entities include but are not limited to hospitals, nursing homes, home health agencies, managed care organizations, universities and other entities with health or social service research programs, state, county and local health agencies, state Medicaid agencies, state, county and local welfare agencies, programs for families, youth and children, Head Start programs, public and private contractors, subcontractors and vendors, physicians, and other providers who receive Federal financial assistance from HHS.

The term Federal financial assistance to which Title VI applies includes but is not limited to grants and loans of Federal funds, grants or donations of Federal property, details of Federal personnel, or any agreement, arrangement or other contract which has as one of its purposes the provision of assistance. (*See,* 45 CFR section 80.13(f); and appendix A to the Title VI regulations, 45 CFR part 80, for additional discussion of what constitutes Federal financial assistance).

Title VI prohibits discrimination in any program or activity that receives Federal financial assistance. What constitutes a program or activity covered by Title VI was clarified by Congress in 1988, when the Civil Rights Restoration Act of 1987 (CRRA) was enacted. The CRRA provides that, in most cases, when a recipient/covered entity receives Federal financial assistance for a particular program or activity, all operations of the recipient/covered entity are covered by Title VI, not just the part of the program that uses the Federal assistance. Thus, all parts of the recipient's operations would be covered by Title VI, even if the Federal assistance is used only by one part.

2. Basic Requirements Under Title VI

A recipient/covered entity whose policies, practices or procedures exclude, limit, or have the effect of excluding or limiting, the participation of any LEP person in a federally-assisted program on the basis of national origin may be engaged in discrimination in violation of Title VI. In order to ensure compliance with Title VI, recipient/covered entities must take steps to ensure that LEP persons who are eligible for their programs or services have meaningful access to the health and social service benefits that they provide. The most important step in meeting this obligation is for recipients of Federal financial assistance such as grants, contracts, and subcontracts to provide the language assistance necessary to ensure such access, at no cost to the LEP person.

The type of language assistance a recipient/covered entity provides to ensure meaningful access will depend on a variety of factors, including the size of the recipient/covered entity, the size of the eligible LEP population it serves, the nature of the program or service, the objectives of the program, the total resources available to the recipient/covered entity, the frequency with which particular languages are encountered, and the frequency with which LEP persons come into contact with the program. There is no ''one size fits all'' solution for Title VI compliance with respect to LEP persons. OCR will make its assessment of the language assistance needed to ensure meaningful access on a case by case basis, and a recipient/covered entity will have considerable flexibility in determining precisely how to fulfill this obligation. OCR will focus on the end result—whether the recipient/covered entity has taken the necessary steps to ensure that LEP persons have meaningful access to its programs and services.

The key to providing meaningful access for LEP persons is to ensure that the recipient/covered entity and LEP person can communicate effectively. The steps taken by a covered entity must ensure that the LEP person is given adequate information, is able to understand the services and benefits available, and is able to receive those for which he or she is eligible. The covered entity must also ensure that the LEP person can effectively communicate the relevant circumstances of his or her situation to the service provider.

In enforcing Title VI and its application to LEP persons over the last 30 years, OCR has found that effective language assistance programs usually contain the four elements described in section three below. In reviewing complaints and conducting compliance reviews, OCR will consider a program to be in compliance when the recipient/covered entity effectively incorporates and implements these four elements. The failure to incorporate or implement one or more of these elements does not necessarily mean noncompliance with Title VI, and OCR will review the totality of the circumstances to determine whether LEP persons can meaningfully access the services and benefits of the recipient/covered entity.

3. Ensuring Meaningful Access to LEP Persons

(a) Introduction—The Four Keys to Title VI Compliance in the LEP Context

The key to providing meaningful access to benefits and services for LEP persons is to ensure that the language assistance provided results in accurate and effective communication between the provider and LEP applicant/client about the types of services and/or benefits available and about the applicant's or client's circumstances. Although HHS recipients have considerable flexibility in fulfilling this obligation, OCR has found that effective programs usually have the following four elements:

—Assessment—The recipient/covered entity conducts a thorough assessment of the language needs of the population to be served;
—Development of Comprehensive Written Policy on Language Access—The recipient/covered entity develops and implements a comprehensive written policy that will ensure meaningful communication;
—Training of Staff—The recipient/covered entity takes steps to ensure that staff understands the policy and is capable of carrying it out; and
—Vigilant Monitoring—The recipient/covered entity conducts regular oversight of the language assistance program to ensure that LEP persons meaningfully access the program.

The failure to implement one or more of these measures does not necessarily mean noncompliance with Title VI, and OCR will review the totality of the circumstances in each case. If implementation of one or more of these options would be so financially burdensome as to defeat the legitimate objectives of a recipient/covered entity's program, or if there are equally effective alternatives for ensuring that LEP

persons have meaningful access to programs and services, OCR will not find the recipient/covered entity in noncompliance.

(b) Assessment

The first key to ensuring meaningful access is for the recipient/covered entity to assess the language needs of the affected population. A recipient/covered entity assesses language needs by:

- Identifying the non-English languages that are likely to be encountered in its program and by estimating the number of LEP persons that are eligible for services and that are likely to be directly affected by its program. This can be done by reviewing census data, client utilization data from client files, and data from school systems and community agencies and organizations;
- Identifying the language needs of each LEP patient/client and recording this information in the client's file;
- Identifying the points of contact in the program or activity where language assistance is likely to be needed;
- Identifying the resources that will be needed to provide effective language assistance;
- Identifying the location and availability of these resources; and
- Identifying the arrangements that must be made to access these resources in a timely fashion.

(c) Development of Comprehensive Written Policy on Language Access

A recipient/covered entity can ensure effective communication by developing and implementing a comprehensive written language assistance program that includes policies and procedures for identifying and assessing the language needs of its LEP applicants/clients, and that provides for a range of oral language assistance options, notice to LEP persons in a language they can understand of the right to free language assistance, periodic training of staff, monitoring of the program, and translation of written materials in certain circumstances.[4]

(1) *Oral Language Interpretation*— In designing an effective language assistance program, a recipient/covered entity develops procedures for obtaining and providing trained and competent interpreters and other oral language assistance services, in a timely manner, by taking some or all of the following steps:

- Hiring bilingual staff who are trained and competent in the skill of interpreting;
- Hiring staff interpreters who are trained and competent in the skill of interpreting;
- Contracting with an outside interpreter service for trained and competent interpreters;
- Arranging formally for the services of voluntary community interpreters who are trained and competent in the skill of interpreting;
- Arranging/contracting for the use of a telephone language interpreter service. See Section 3(e)(2) for a discussion on ''Competence of Interpreters.''

The following provides guidance to recipient/covered entities in determining which language assistance options will be of sufficient quantity and quality to meet the needs of their LEP beneficiaries:

Bilingual Staff—Hiring bilingual staff for patient and client contact positions facilitates participation by LEP persons. However, where there are a variety of LEP language groups in a recipient's service area, this option may be insufficient to meet the needs of all LEP applicants and clients. Where this option is insufficient to meet the needs, the recipient/covered entity must provide additional and timely language assistance. Bilingual staff must be trained and must demonstrate competence as interpreters.

Staff Interpreters—Paid staff interpreters are especially appropriate where there is a frequent and/or regular need for interpreting services. These persons must be competent and readily available.

Contract Interpreters—The use of contract interpreters may be an option for recipient/covered entities that have an infrequent need for interpreting services, have less common LEP language groups in their service areas, or need to supplement their in-house capabilities on an as-needed basis. Such contract interpreters must be readily available and competent.

Community Volunteers—Use of community volunteers may provide recipient/covered entities with a cost-effective method for providing interpreter services. However, experience has shown that to use community volunteers effectively, recipient/covered entities must ensure that formal arrangements for interpreting services are made with community organizations so that these organizations are not subjected to *ad hoc* requests for assistance. In addition, recipient/covered entities must ensure that these volunteers are competent as interpreters and understand their obligation to maintain client confidentiality. Additional language assistance must be provided where competent volunteers are not readily available during all hours of service.

Telephone Interpreter Lines—A telephone interpreter service line may be a useful option as a supplemental system, or may be useful when a recipient/covered entity encounters a language that it cannot otherwise accommodate. Such a service often offers interpreting assistance in many different languages and usually can provide the service in quick response to a request. However, recipient/covered entities should be aware that such services may not always have readily available interpreters who are familiar with the terminology peculiar to the particular program or service. It is important that a recipient/covered entity not offer this as the only language assistance option except where other language assistance options are unavailable (*e.g.,* in a rural clinic visited by an LEP patient who speaks a language that is not usually encountered in the area).

(2) *Translation of Written Materials*— An effective language assistance program ensures that written materials that are routinely provided in English to applicants, clients and the public are available in regularly encountered languages other than English. It is particularly important to ensure that vital documents, such as applications, consent forms, letters containing important information regarding participation in a program (such as a cover letter outlining conditions of participation in a Medicaid managed care program), notices pertaining to the reduction, denial or termination of services or benefits, of the right to appeal such actions or that require a response from beneficiaries, notices advising LEP persons of the availability of free language assistance, and other outreach materials be translated into the non-English language of each regularly encountered LEP group eligible to be served or likely to be directly affected by the recipient/covered entity's program. However, OCR recognizes that each federally-funded health and social service program has unique characteristics. Therefore, OCR will collaborate with respective HHS agencies in determining which documents and information are deemed to be vital.

[4] The Americans with Disabilities Act and Section 504 of the Rehabilitation Act of 1973 both provide similar prohibitions against discrimination on the basis of disability and reqwuire entities to provide language assistance such as sign language interpreters for hearing impaired individuals or alternative formats such as braille, large print or tape for vision impaired individuals. In developing a comprehensive language assistance program, recipient/covered entities should be mindful of their responsibilities under the ADA and Section 504 to ensure access to programs for individuals with disabilities.

As part of its overall language assistance program, a recipient must develop and implement a plan to provide written materials in languages other than English where a significant number or percentage of the population eligible to be served or likely to be directly affected by the program needs services or information in a language other than English to communicate effectively. 28 CFR Section 42.405(d)(1). OCR will determine the extent of the recipient/covered entity's obligation to provide written translation of documents on a case by case basis, taking into account all relevant circumstances, including the nature of the recipient/covered entity's services or benefits, the size of the recipient/covered entity, the number and size of the LEP language groups in its service area, the nature and length of the document, the objectives of the program, the total resources available to the recipient/covered entity, the frequency with which translated documents are needed, and the cost of translation.

One way for a recipient/covered entity to know with greater certainty that it will be found in compliance with its obligation to provide written translations in languages other than English is for the recipient/covered entity to meet the guidelines outlined in paragraphs (A) and (B) below.

Paragraphs (A) and (B) outline the circumstances that provide a ''safe harbor'' for recipient/covered entities. A recipient/covered entity that provides written translations under these circumstances can be confident that it will be found in compliance with its obligation under Title VI regarding written translations.[5] However, the failure to provide written translations under these circumstances outlined in paragraphs (A) and (B) will not necessarily mean noncompliance with Title VI.

In such circumstances, OCR will review the totality of the circumstances to determine the precise nature of a recipient/covered entity's obligation to provide written materials in languages other than English. If written translation of a certain document or set of documents would be so financially burdensome as to defeat the legitimate objectives of its program, or if there is an alternative means of ensuring that LEP persons have meaningful access to the information provided in the document (such as timely, effective oral interpretation of vital documents), OCR will not find the translation of written materials necessary for compliance with Title VI.

OCR will consider a recipient/covered entity to be in compliance with its Title VI obligation to provide written materials in non-English languages if:

(A) The recipient/covered entity provides translated written materials, including vital documents, for each eligible LEP language group that constitutes ten percent or 3,000, whichever is less, of the population of persons eligible to be served or likely to be directly affected by the recipient/covered entity's program;[6]

(B) Regarding LEP language groups that do not fall within paragraph (A) above, but constitute five percent or 1,000, whichever is less, of the population of persons eligible to be served or likely to be directly affected, the recipient/covered entity ensures that, at a minimum, vital documents are translated into the appropriate non-English languages of such LEP persons. Translation of other documents, if needed, can be provided orally; and

(C) Notwithstanding paragraphs (A) and (B) above, a recipient with fewer than 100 persons in a language group eligible to be served or likely to be directly affected by the recipient/covered entity's program, does not translate written materials but provides written notice in the primary language of the LEP language group of the right to receive competent oral translation of written materials.

The term ''persons eligible to be served or likely to be directly affected'' relates to the issue of what is the recipient/covered entity's service area for purposes of meeting its Title VI obligation. There is no ''one size fits all'' definition of what constitutes ''persons eligible to be served or likely to be directly affected'' and OCR will address this issue on a case by case basis.

Ordinarily, persons eligible to be served or likely to be directly affected by a recipient's program are those persons who are in the geographic area that has been approved by a Federal grant agency as the recipient/covered entity's service area, and who either are eligible for the recipient/covered entity's benefits or services, or otherwise might be directly affected by such an entity's conduct. For example, a parent who might seek services for a child would be seen as likely to be affected by a recipient/covered entity's policies and practices. Where no service area has been approved by a Federal grant agency, OCR will consider the relevant service area for determining persons eligible to be served as that designated and/or approved by state or local authorities or designated by the recipient/covered entity itself, provided that these designations do not themselves discriminatorily exclude certain populations. OCR may also determine the service area to be the geographic areas from which the recipient draws, or can be expected to draw, clients/patients. The following are examples of how OCR would determine the relevant service areas when assessing who is eligible to be served or likely to be affected:

- A complaint filed with OCR alleges that a private hospital discriminates against Hispanic and Chinese LEP patients by failing to provide such persons with language assistance, including written translations of consent forms. The hospital identifies its service area as the geographic area identified in its marketing plan. OCR determines that a substantial number of the hospital's patients are drawn from the area identified in the marketing plan and that no area with concentrations of racial, ethnic or other minorities is discriminatorily excluded from the plan. OCR is likely to accept the area identified in the marketing plan as the relevant service area.
- A state enters into a contract with a managed care plan for the provision of health services to Medicaid beneficiaries. The Medicaid managed care contract provides that the plan will serve beneficiaries in three counties. The contract is reviewed and approved by HHS. In determining the persons eligible to be served or likely to be affected, the relevant service area would be that designated in the contract.

As this guidance notes, Title VI provides that no person may be denied meaningful access to a recipient/covered entity's benefits and services, on the basis of national origin. To comply with the Title VI requirement, a recipient/covered entity must ensure that LEP persons have meaningful access to and can understand information contained in program-related written documents. Thus, for

[5] The ''safe harbor'' provisions in paragraphs (A) and (B) below are not intended to establish numerical thresholds for when a recipient must translate documents. The numbers and percentages included in these provisions are based on the balancing of a number of factors, including OCR's experience in enforcing Title VI in the context of health and human services programs, and OCR's discussions with other Department agencies about experiences of their grant recipient/covered entities with language access issues.

[6] As noted above, vital documents include applications, consent forms, letters containing information regarding eligibility or participation criteria, and notices pertaining to reduction, denial or termination of services or benefits, that require a response from beneficiaries, and/or that advise of free language assistance. Large documents, such as enrollment handbooks, may not need to be translated in their entirety. However, vital information contained in large documents must be translated.

language groups that do not fall within paragraphs (A) and (B), above, a recipient can ensure such access by, at a minimum, providing notice, in writing, in the LEP person's primary language, of the right to receive free language assistance in a language other than English, including the right to competent oral translation of written materials, free of cost.

Recent technological advances have made it easier for recipient/covered entities to store translated documents readily. At the same time, OCR recognizes that recipient/covered entities in a number of areas, such as many large cities, regularly serve LEP persons from many different areas of the world who speak dozens and sometimes over 100 different languages. It would be unduly burdensome to demand that recipient/covered entities in these circumstances translate all written materials into dozens, if not more than 100 languages. As a result, OCR will determine the extent of the recipient/covered entity's obligation to provide written translations of documents on a case by case basis, looking at the totality of the circumstances.[7]

It is also important to ensure that the person translating the materials is well qualified. In addition, it is important to note that in some circumstances verbatim translation of materials may not accurately or appropriately convey the substance of what is contained in the written materials. An effective way to address this potential problem is to reach out to community-based organizations to review translated materials to ensure that they are accurate and easily understood by LEP persons.

(3) *Methods for Providing Notice to LEP Persons*—A vital part of a well-functioning compliance program includes having effective methods for notifying LEP persons regarding their right to language assistance and the availability of such assistance free of charge. These methods include but are not limited to:

—Use of language identification cards which allow LEP beneficiaries to identify their language needs to staff and for staff to identify the language needs of applicants and clients. To be effective, the cards (e.g., ''I speak cards'') must invite the LEP person to identify the language he/she speaks. This identification must be recorded in the LEP person's file;

—Posting and maintaining signs in regularly encountered languages other than English in waiting rooms, reception areas and other initial points of entry. In order to be effective, these signs must inform applicants and beneficiaries of their right to free language assistance services and invite them to identify themselves as persons needing such services;

—Translation of application forms and instructional, informational and other written materials into appropriate non-English languages by competent translators. For LEP persons whose language does not exist in written form, assistance from an interpreter to explain the contents of the document;

—Uniform procedures for timely and effective telephone communication between staff and LEP persons. This must include instructions for English-speaking employees to obtain assistance from interpreters or bilingual staff when receiving calls from or initiating calls to LEP persons; and

—Inclusion of statements about the services available and the right to free language assistance services, in appropriate non-English languages, in brochures, booklets, outreach and recruitment information and other materials that are routinely disseminated to the public.

(d) Training of Staff

Another vital element in ensuring that its policies are followed is a recipient/covered entity's dissemination of its policy to all employees likely to have contact with LEP persons, and periodic training of these employees. Effective training ensures that employees are knowledgeable and aware of LEP policies and procedures, are trained to work effectively with in-person and telephone interpreters, and understand the dynamics of interpretation between clients, providers and interpreters. It is important that this training be part of the orientation for new employees and that all employees in client contact positions be properly trained. Given the high turnover rate among some employees, recipient/covered entities may find it useful to maintain a training registry that records the names and dates of employees' training. Over the years, OCR has observed that recipient/covered entities often develop effective language assistance policies and procedures but that employees are unaware of the policies, or do not know how to, or otherwise fail to, provide available assistance. Effective training is one means of ensuring that there is not a gap between a recipient/covered entity's written policies and procedures, and the actual practices of employees who are in the front lines interacting with LEP persons.

(e) Monitoring

It is also crucial for a recipient/covered entity to monitor its language assistance program at least annually to assess the current LEP makeup of its service area, the current communication needs of LEP applicants and clients, whether existing assistance is meeting the needs of such persons, whether staff is knowledgeable about policies and procedures and how to implement them, and whether sources of and arrangements for assistance are still current and viable. One element of such an assessment is for a recipient/covered entity to seek feedback from clients and advocates. OCR has found that compliance with the Title VI language assistance obligation is most likely when a recipient/covered entity continuously monitors its program, makes modifications where necessary, and periodically trains employees in implementation of the policies and procedures.

4. OCR's Assessment of Meaningful Access

The failure to take all of the steps outlined in Section C. 3, above, will not necessarily mean that a recipient/covered entity has failed to provide meaningful access to LEP clients. As noted above, OCR will make assessments on a case by case basis and will consider several factors in assessing whether the steps taken by a recipient/covered entity provide meaningful access. Those factors include the size of the recipient/covered entity and of the eligible LEP population, the nature of the program or service, the objectives of the program, the total resources available, the frequency with which particular languages are encountered, and the frequency with which LEP persons come into contact with the program. The following are examples of

[7] For instance, a Medicaid managed care program that regularly encounters, or potentially will encounter on a regular basis, LEP persons who speak dozens or perhaps over 100 different languages, would not be required to translate the lengthy program brochure into every regularly encountered language. Rather, the recipient/covered entity in these circumstances would likely be required to translate the written materials into the most frequently encountered languages. Regarding the remaining regularly encountered languages, the recipient/covered entity would be required to ensure that the LEP person receives written notification in the appropriate non-English language of the right to free oral translation of the written materials. In addition, the recipient/covered entity would frequently be required to provide written translations of vital documents that are short in length and pertain to important aspects of critical programs, such as a cover letter that outlines the terms and conditions of participation in a Medicaid managed care program, and/or contains time sensitive information about enrollment or continued participation.

how meaningful access will be assessed by OCR:

—A physician, a sole practitioner, has about 50 LEP Hispanic patients. He has a staff of two nurses and a receptionist, derives a modest income from his practice, and receives Medicaid funds. He asserts that he cannot afford to hire bilingual staff, contract with a professional interpreter service, or translate written documents. To accommodate the language needs of his LEP patients, he has made arrangements with a Hispanic community organization for trained and competent volunteer interpreters, and with a telephone interpreter language line, to interpret during consultations and to orally translate written documents. There have been no client complaints of inordinate delays or other service related problems with respect to LEP clients. Given the physician's resources, the size of his staff, and the size of the LEP population, OCR would find the physician in compliance with Title VI.

—A county TANF program, with a large budget, serves 500,000 beneficiaries. Of the beneficiaries eligible for its services, 3,500 are LEP Chinese persons, 4,000 are LEP Hispanic persons, 2000 are LEP Vietnamese persons and about 400 are LEP Laotian persons. The county has no policy regarding language assistance to LEP persons, and LEP clients are told to bring their own interpreters, are provided with application and consent forms in English and if unaccompanied by their own interpreters, must solicit the help of other clients or must return at a later date with an interpreter. Given the size of the county program, its resources, the size of the eligible LEP population, and the nature of the program, OCR would likely find the county in violation of Title VI and would likely require it to develop a comprehensive language assistance program that includes all of the options discussed in Section C. 3, above.

—A large national corporation receives TANF funds from a local welfare agency to provide computer training to TANF beneficiaries. Of the 2,000 clients that are trained by the corporation each month, approximately one-third are LEP Hispanic persons. The corporation has made no arrangements for language assistance and relies on bilingual Hispanic students in class to help LEP students understand the oral instructions and the written materials. Based on the size of the welfare agency and corporation, their budgets, the size of the LEP population, and the nature of the program, OCR would likely find both the welfare agency and the corporation in noncompliance with Title VI. The welfare agency would likely be found in noncompliance for failing to provide LEP clients meaningful access to its benefits and services through its contract with the corporation, and for failing to monitor the training program to ensure that it provided such access. OCR would likely also find the corporation in noncompliance for failing to provide meaningful access to LEP clients and would require it to provide them with both oral and written language assistance.

5. Interpreters

Two recurring issues in the area of interpreter services involve (a) the use of friends, family, or minor children as interpreters, and (b) the need to ensure that interpreters are competent, especially in the area of medical interpretation.

(a) *Use of Friends, Family and Minor Children as Interpreters*—A recipient/covered entity may expose itself to liability under Title VI if it requires, suggests, or encourages an LEP person to use friends, minor children, or family members as interpreters, as this could compromise the effectiveness of the service. Use of such persons could result in a breach of confidentiality or reluctance on the part of individuals to reveal personal information critical to their situations. In a medical setting, this reluctance could have serious, even life threatening, consequences. In addition, family and friends usually are not competent to act as interpreters, since they are often insufficiently proficient in both languages, unskilled in interpretation, and unfamiliar with specialized terminology.

If after a recipient/covered entity informs an LEP person of the right to free interpreter services, the person declines such services and requests the use of a family member or friend, the recipient/covered entity may use the family member or friend, if the use of such a person would not compromise the effectiveness of services or violate the LEP person's confidentiality. The recipient/covered entity should document the offer and declination in the LEP person's file. Even if an LEP person elects to use a family member or friend, the recipient/covered entity should suggest that a trained interpreter sit in on the encounter to ensure accurate interpretation.

(b) *Competence of Interpreters*—In order to provide effective services to LEP persons, a recipient/covered entity must ensure that it uses persons who are competent to provide interpreter services. Competency does not necessarily mean formal certification as an interpreter, though certification is helpful. On the other hand, competency requires more than self-identification as bilingual. The competency requirement contemplates demonstrated proficiency in both English and the other language, orientation and training that includes the skills and ethics of interpreting (e.g. issues of confidentiality), fundamental knowledge in both languages of any specialized terms, or concepts peculiar to the recipient/covered entity's program or activity, sensitivity to the LEP person's culture and a demonstrated ability to convey information in both languages, accurately. A recipient/covered entity must ensure that those persons it provides as interpreters are trained and demonstrate competency as interpreters.

6. Examples of Frequently Encountered Scenarios

Over the course of the past 30 years enforcing Title VI in the LEP context, OCR has observed a number of recurring problems. The following are examples of frequently encountered policies and practices that are likely to violate Title VI:

—A woman is brought to the emergency room of a hospital by her brother. The hospital has no language assistance services and requires her brother to interpret for her. She is too embarrassed to discuss her condition through her brother and leaves without treatment. Alternatively, she is forced to use her brother as the interpreter, who is untrained in medical terminology and through whom she refuses to discuss sensitive information pertaining to her medical condition.

—A health clinic uses a Spanish-speaking security guard who has no training in interpreting skills and is unfamiliar with medical terminology, as an interpreter for its Hispanic LEP patients. He frequently relays inaccurate information that results in inaccurate instructions to patients.

—A local welfare office uses a Vietnamese janitor to interpret whenever Vietnamese applicants or beneficiaries seek services or benefits. The janitor has been in America for six months, does not speak English well and is not familiar with the terminology that is used. He often

relays inaccurate information that results in the denial of benefits to clients.

—A state welfare agency does not advise a mother of her right to free language assistance and encourages her to use her eleven year old daughter to interpret for her. The daughter does not understand the terminology being used and relays inaccurate information to her mother whose benefits are jeopardized by the failure to obtain accurate information.

—A medical clinic uses a medical student as an interpreter based on her self-identification as bilingual. While in college, the student had spent a semester in Spain as an exchange student. The student speaks Spanish haltingly and must often ask patients to speak slowly and to repeat their statements. On several occasions, she has relayed inaccurate information that has resulted in misdiagnosis.

—A managed care plan calls the receptionist at an Ethiopian community organization whenever it or one of its providers needs the services of an interpreter for an Ethiopian patient. The plan instructs the receptionist to send anyone who is available as long as that person speaks English. Many of the interpreters sent to a provider either do not understand English well enough to interpret accurately or are unfamiliar with medical terminology. As a result, clients often misunderstand their rights and benefits.

—A local welfare office forces a Mandarin-speaking client seeking to apply for SCHIP benefits on behalf of her three year old child to wait for a number of hours (or tells the client to come back another day) to receive assistance because it cannot communicate effectively with her, and has no effective plan for ensuring meaningful communication. This results in a delay of benefits.

—An HMO that enrolls Medicaid beneficiaries instructs a non-English speaking client to provide his or her own interpreter services during all office visits.

—A health plan requires non-English speaking patients to pay for interpreter services.

D. Promising Practices

In meeting the needs of their LEP patients and clients, some recipient/covered entities have found unique ways of providing interpreter services and reaching out to the LEP community. As part of its technical assistance, OCR has frequently assisted, and will continue to assist, recipient/covered entities who are interested in learning about promising practices in the area of service to LEP populations. Examples of promising practices include the following:

Simultaneous Translation—One urban hospital is testing a state of the art medical interpretation system in which the provider and patient communicate using wireless remote headsets while a trained competent interpreter, located in a separate room, provides simultaneous interpreting services to the provider and patient. The interpreter can be miles away. This reduces delays in the delivery of language assistance, since the interpreter does not have to travel to the recipient/covered entity's facility. In addition, a provider that operates more than one facility can deliver interpreter services to all facilities using this central bank of interpreters, as long as each facility is equipped with the proper technology.

Language Banks—In several parts of the country, both urban and rural, community organizations and providers have created community language banks that train, hire and dispatch competent interpreters to participating organizations, reducing the need to have on-staff interpreters for low demand languages. These language banks are frequently nonprofit and charge reasonable rates. This approach is particularly appropriate where there is a scarcity of language services, or where there is a large variety of language needs.

Language Support Office—A state social services agency has established an ''Office for Language Interpreter Services and Translation.'' This office tests and certifies all in-house and contract interpreters, provides agency-wide support for translation of forms, client mailings, publications and other written materials into non-English languages, and monitors the policies of the agency and its vendors that affect LEP persons.

Multicultural Delivery Project—Another county agency has established a ''Multicultural Delivery Project'' that is designed to find interpreters to help immigrants and other LEP persons to navigate the county health and social service systems. The project uses community outreach workers to work with LEP clients and can be used by employees in solving cultural and language issues. A multicultural advisory committee helps to keep the county in touch with community needs.

Pamphlets—A hospital has created pamphlets in several languages, entitled ''While Awaiting the Arrival of an Interpreter.'' The pamphlets are intended to facilitate basic communication between inpatients/outpatients and staff. They are not intended to replace interpreters but may aid in increasing the comfort level of LEP persons as they wait for services.

Use of Technology—Some recipient/covered entities use their internet and/or intranet capabilities to store translated documents online. These documents can be retrieved as needed.

Telephone Information Lines—Recipient/covered entities have established telephone information lines in languages spoken by frequently encountered language groups to instruct callers, in the non-English languages, on how to leave a recorded message that will be answered by someone who speaks the caller's language.

Signage and Other Outreach—Other recipient/covered entities have provided information about services, benefits, eligibility requirements, and the availability of free language assistance, in appropriate languages by (a) posting signs and placards with this information in public places such as grocery stores, bus shelters and subway stations; (b) putting notices in newspapers, and on radio and television stations that serve LEP groups; (c) placing flyers and signs in the offices of community-based organizations that serve large populations of LEP persons; and (d) establishing information lines in appropriate languages.

E. Model Plan

The following is an example of a model language assistance program that is potentially useful for all recipient/covered entities, but is particularly appropriate for entities such as hospitals or social service agencies that serve a significant and diverse LEP population. This model plan incorporates a variety of options and methods for providing meaningful access to LEP beneficiaries:

- A formal written language assistance program;
- Identification and assessment of the languages that are likely to be encountered and estimating the number of LEP persons that are eligible for services and that are likely to be affected by its program through a review of census and client utilization data and data from school systems and community agencies and organizations;
- Posting of signs in lobbies and in other waiting areas, in several languages, informing applicants and clients of their right to free interpreter services and inviting them to identify themselves as persons needing language assistance;
- Use of ''I speak'' cards by intake workers and other patient contact

personnel so that patients can identify their primary languages;

• Requiring intake workers to note the language of the LEP person in his/her record so that all staff can identify the language assistance needs of the client;

• Employment of a sufficient number of staff, bilingual in appropriate languages, in patient and client contact positions such as intake workers, caseworkers, nurses, doctors. These persons must be trained and competent as interpreters;

• Contracts with interpreting services that can provide competent interpreters in a wide variety of languages, in a timely manner;

• Formal arrangements with community groups for competent and timely interpreter services by community volunteers;

• An arrangement with a telephone language interpreter line;

• Translation of application forms, instructional, informational and other key documents into appropriate non-English languages. Provision of oral interpreter assistance with documents, for those persons whose language does not exist in written form;

• Procedures for effective telephone communication between staff and LEP persons, including instructions for English-speaking employees to obtain assistance from bilingual staff or interpreters when initiating or receiving calls from LEP persons;

• Notice to and training of all staff, particularly patient and client contact staff, with respect to the recipient/covered entity's Title VI obligation to provide language assistance to LEP persons, and on the language assistance policies and the procedures to be followed in securing such assistance in a timely manner;

• Insertion of notices, in appropriate languages, about the right of LEP applicants and clients to free interpreters and other language assistance, in brochures, pamphlets, manuals, and other materials disseminated to the public and to staff;

• Notice to the public regarding the language assistance policies and procedures, and notice to and consultation with community organizations that represent LEP language groups, regarding problems and solutions, including standards and procedures for using their members as interpreters;

• Adoption of a procedure for the resolution of complaints regarding the provision of language assistance; and for notifying clients of their right to and how to file a complaint under Title VI with HHS.

• Appointment of a senior level employee to coordinate the language assistance program, and ensure that there is regular monitoring of the program.

F. Compliance and Enforcement

The recommendations outlined above are not intended to be exhaustive. Recipient/covered entities have considerable flexibility in determining how to comply with their legal obligation in the LEP setting, and are not required to use all of the suggested methods and options listed. However, recipient/covered entities must establish and implement policies and procedures for providing language assistance sufficient to fulfill their Title VI responsibilities and provide LEP persons with meaningful access to services.

OCR will enforce Title VI as it applies to recipient/covered entities' responsibilities to LEP persons through the procedures provided for in the Title VI regulations. These procedures include complaint investigations, compliance reviews, efforts to secure voluntary compliance, and technical assistance.

The Title VI regulations provide that OCR will investigate whenever it receives a complaint, report or other information that alleges or indicates possible noncompliance with Title VI. If the investigation results in a finding of compliance, OCR will inform the recipient/covered entity in writing of this determination, including the basis for the determination. If the investigation results in a finding of noncompliance, OCR must inform the recipient/covered entity of the noncompliance through a Letter of Findings that sets out the areas of noncompliance and the steps that must be taken to correct the noncompliance, and must attempt to secure voluntary compliance through informal means. If the matter cannot be resolved informally, OCR must secure compliance through (a) the termination of Federal assistance after the recipient/covered entity has been given an opportunity for an administrative hearing, (b) referral to DOJ for injunctive relief or other enforcement proceedings, or (c) any other means authorized by law.

As the Title VI regulations set forth above indicate, OCR has a legal obligation to seek voluntary compliance in resolving cases and cannot seek the termination of funds until it has engaged in voluntary compliance efforts and has determined that compliance cannot be secured voluntarily. OCR will engage in voluntary compliance efforts, and will provide technical assistance to recipients at all stages of its investigation. During these efforts to secure voluntary compliance, OCR will propose reasonable timetables for achieving compliance and will consult with and assist recipient/covered entities in exploring cost effective ways of coming into compliance, by sharing information on potential community resources, by increasing awareness of emerging technologies, and by sharing information on how other recipient/covered entities have addressed the language needs of diverse populations.

OCR will focus its compliance review efforts primarily on larger recipient/covered entities such as hospitals, managed care organizations, state agencies, and social service organizations, that have a significant number or percentage of LEP persons eligible to be served, or likely to be directly affected, by the recipient/covered entity's program. Generally, it has been the experience of OCR that in order to ensure compliance with Title VI, these recipient/covered entities will be expected to utilize a wider range of the language assistance options outlined in section C. 3, above.

The fact that OCR is focusing its investigative resources on larger recipient/covered entities with significant numbers or percentages of LEP persons likely to be served or directly affected does not mean that other recipient/covered entities are relieved of their obligation under Title VI, or will not be subject to review by OCR. In fact, OCR has a legal obligation under HHS regulations to promptly investigate all complaints alleging a violation of Title VI. All recipient/covered entities must take steps to overcome language differences that result in barriers and provide the language assistance needed to ensure that LEP persons have meaningful access to services and benefits. However, smaller recipient/covered entities—such as sole practitioners, those with more limited resources, and recipient/covered entities who serve small numbers of LEP persons on an infrequent basis—will have more flexibility in meeting their obligations to ensure meaningful access for LEP persons.

In determining a recipient/covered entity's compliance with Title VI, OCR's primary concern is to ensure that the recipient/covered entity's policies and procedures overcome barriers resulting from language differences that would deny LEP persons a meaningful opportunity to participate in and access programs, services and benefits. A recipient/covered entity's appropriate

use of the methods and options discussed in this policy guidance will be viewed by OCR as evidence of a recipient/covered entity's willingness to comply voluntarily with its Title VI obligations.

G. Technical Assistance

Over the past 30 years, OCR has provided substantial technical assistance to recipient/covered entities, and will continue to be available to provide such assistance to any recipient/covered entity seeking to ensure that it operates an effective language assistance program. In addition, during its investigative process, OCR is available to provide technical assistance to enable recipient/covered entities to come into voluntary compliance.

H. Attachments

Appendix A is a summary, in question and answer format, of a number of the critical elements of this guidance. The purpose of the summary is to assist recipient/covered entities further in understanding this guidance and their obligations under Title VI to ensure meaningful access to LEP persons. Appendix B is a list of numerous provisions, including but not limited to Federal and state laws and regulations, requiring the provision of language assistance to LEP persons in various circumstances. This list is not exhaustive, and is not limited to the health and human service context.

Appendix A: Questions and Answers Regarding the Office for Civil Rights Policy Guidance on the Title VI Prohibition Against National Origin Discrimination as it Affects Persons With Limited English Proficiency

1. Q. What Is the Purpose of the Guidance on Language Access Released by the Office for Civil Rights (OCR) of the U.S. Department of Health and Human Services (HHS)?

A. The purpose of the Policy Guidance is two-fold: First, to clarify the responsibilities of providers of health and social services who receive Federal financial assistance from HHS, and assist them in fulfilling their responsibilities to Limited English Proficient (LEP) persons, pursuant to Title VI of the Civil Rights Act of 1964; and second, to clarify to members of the public that health and social service providers must ensure that LEP persons have meaningful access to their programs and services.

2. Q. What Does the Policy Guidance Do?

A. The policy guidance does the following:

- Reiterates the principles of Title VI with respect to LEP persons.
- Discusses the policies, procedures and other steps that recipients can take to ensure meaningful access to their program by LEP persons.
- Clarifies that failure to take one or more of these steps does not necessarily mean noncompliance with Title VI.
- Provides that OCR will determine compliance on a case by case basis, and that such assessments will take into account the size of the recipient, the size of the LEP population, the nature of the program, the resources available, and the frequency of use by LEP persons.
- Provides that small providers and recipient/covered entities with limited resources, will have a great deal of flexibility in achieving compliance.
- Provides that OCR will provide extensive technical assistance as needed by recipient/covered entities.

3. Q. Does the Guidance Impose New Requirements on Recipient/Covered Entities?

A. No. Since its enactment, Title VI of the Civil Rights Act of 1964 has prohibited discrimination on the basis of race, color or national origin in any program or activity that receives federal financial assistance. In order to avoid violating Title VI, recipient/covered entities must ensure that they provide LEP persons meaningful opportunity to participate in their programs, services and benefits. Over the past three decades, OCR has conducted thousands of investigations and reviews involving language differences that affect the access of LEP persons to medical care and social services. Where such language differences prevent meaningful access on the basis of national origin, the law requires that recipient/covered entities provide oral and written language assistance at no cost to the recipient. This guidance synthesizes the legal requirements that have been on the books and that OCR has been enforcing for over three decades.

4. Q. Who Is Covered by the Guidance?

A. Covered entities include any state or local agency, private institution or organization, or any public or private individual that (1) operates, provides or engages in health, or social service programs and activities, and (2) receives Federal financial assistance from HHS directly or through another recipient/covered entity. Examples of covered entities include but are not limited to hospitals, nursing homes, home health agencies, managed care organizations, universities and other entities with health or social service research programs; state, county and local health agencies; state Medicaid agencies; state, county and local welfare agencies; programs for families, youth and children; Head Start programs; public and private contractors, subcontractors and vendors; physicians; and other providers who receive Federal financial assistance from HHS.

5. Q. How Does the Guidance Affect Small Practitioners and Providers?

A. The key to providing meaningful access for LEP persons is to ensure that the relevant circumstances of the LEP person's situation can be effectively communicated to the service provider and the LEP person is able to understand the services and benefits available and is able to receive those services and benefits for which he or she is eligible in a timely manner. Small practitioners and providers will have considerable flexibility in determining precisely how to fulfill their obligations to ensure meaningful access for persons with limited English proficiency. OCR will assess compliance on a case by case basis and will take into account the size of the recipient/covered entity, the size of the eligible LEP population it serves, the nature of the program or service, the objectives of the program, the total resources available to the recipient/covered entity, the frequency with which languages are encountered and the frequency with which LEP persons come into contact with the program. There is no ''one size fits all'' solution for Title VI compliance with respect to LEP persons.

In other words, OCR will focus on the end result, that is, whether the small practitioner or provider has taken steps, given the factors that will be considered by OCR, to ensure that the LEP persons have access to the programs and services provided by the physician. OCR will continue to be available to provide technical assistance to any physician seeking to ensure that s/he operates an effective language assistance program.

For example: A physician, a sole practitioner, has about 50 LEP Hispanic patients. He has a staff of two nurses and a receptionist derives a modest income from his practice, and receives Medicaid funds. He asserts that he cannot afford to hire bilingual staff, contract with a professional interpreter service, or translate written documents. To accommodate the language needs of his LEP patients he has made arrangements with a Hispanic community organization for trained and competent volunteer interpreters and with a telephone interpreter language line, to interpret during consultations and to orally translate written documents. There have been no client complaints of inordinate delays or other service related problems with respect to LEP clients. Given the physician's resources, the size of his staff, and the size of the LEP population, OCR would find the physician in compliance with Title VI.

6. Q. The Guidance Identifies Some Specific Circumstances Under Which OCR Will Consider a Program To Be in Compliance With Its Obligation Under Title VI To Provide Written Materials in Languages Other Than English. Does This Mean That a Recipient/Covered Entity Will Be Considered Out of Compliance With Title VI if Its Program Does Not Fall Within These Circumstances?

A. No. The circumstances outlined in the guidance are intended to provide a ''safe harbor'' for recipients who desire greater certainty with respect to their obligations to provide written translations. Thus, a recipient/covered entity whose policies and practices fall within these circumstances can be confident that, with respect to written translations, it will be found in compliance with Title VI. However, the failure to fall within the ''safe harbors'' outlined in the guidance does not necessarily mean that a recipient/covered entity is not in compliance with Title VI. In such circumstances, OCR will review the totality of circumstances to determine the precise nature of a recipient/covered entity's obligation to provide written materials in languages other than English. If

translation of a certain document or set of documents would be so financially burdensome as to defeat the legitimate objectives of its program, or if there is an alternative means of ensuring that LEP persons have meaningful access to the information provided in the document (such as timely, effective oral interpretation of vital documents), OCR will likely not find the translation necessary for compliance with Title VI.

7. Q. The Guidance Makes Reference to "Vital Documents" and Notes That, in Certain Circumstances, a Recipient/Covered Entity May Have To Translate Such Documents Into Other Languages. What Is a Vital Document?

A. Given the wide array of programs and activities receiving HHS financial assistance, we do not attempt to identify vital documents and information with specificity in each program area. Rather, a document or information should be considered vital if it contains information that is critical for accessing the federal fund recipient's services and/or benefits, or is required by law. Thus, vital documents include, but are not limited to, applications, consent forms, letters and notices pertaining to the reduction, denial or termination of services or benefits, letters or notices that require a response from the beneficiary or client, and documents that advise of free language assistance. OCR will also collaborate with respective HHS agencies in determining which documents and information are deemed to be vital within a particular program.

8. Q. Will Recipient/Covered Entities Have To Translate Large Documents Such as Managed Care Enrollment Handbooks?

A. Not necessarily. As part of its overall language assistance program, a recipient must develop and implement a plan to provide written materials in languages other than English where a significant number or percentage of the population eligible to be served, or likely to be directly affected by the program, needs services or information in a language other than English to communicate effectively. OCR will assess the need for written translation of documents and vital information contained in larger documents on a case by case basis, taking into account all relevant circumstances, including the nature of the recipient/covered entity's services or benefits, the size of the recipient/covered entity, the number and size of the LEP language groups in its service area, the nature and length of the document, the objectives of the program, the total resources available to the recipient/covered entity, the frequency which particular languages are encountered and the frequency with which translated documents are needed and the cost of translation. Depending on these circumstances, large documents, such as enrollment handbooks, may not need to be translated or may not need to be translated in their entirety. For example, a recipient/covered entity may be required to provide written translations of vital information contained in larger documents, but may not have to translate the entire document, to meet its obligations under Title VI.

9. Q. May a Recipient/Covered Entity Require an LEP Person To Use a Family Member or a Friend as His or Her Interpreter?

A. No. OCR's policy requires the recipient/covered entity to inform the LEP person of the right to receive free interpreter services first and permits the use of family and friends only after such offer of assistance has been declined and documented. Our policy regarding the use of family and friends as interpreters is based on over three decades of experience with Title VI. Although OCR recognizes that some individuals may be uncomfortable having a stranger serve as an interpreter, especially when the situation involves the discussion of very personal or private matters, it is our experience that family and friends frequently are not competent to act as interpreters, since they may be insufficiently proficient in both languages, untrained and unskilled as interpreters, and unfamiliar with specialized terminology. Use of such persons also may result in breaches of confidentiality or reluctance on the part of the individual to reveal personal information critical to their situations. These concerns are even more pronounced when the family member called upon to interpret is a minor. In other words, when family and friends are used, there is a grave risk that interpretation may not be accurate or complete. In medical settings, in particular, this can result in serious, even life threatening consequences.

10. Q. How Does Low Health Literacy, Non-Literacy, Non-Written Languages, Blindness and Deafness Among LEP Populations Affect the Responsibilities of Federal Fund Recipients?

A. Effective communication in any language requires an understanding of the literacy levels of the eligible populations. However, literacy generally is a program operations issue rather than a Title VI issue. Where a LEP individual has a limited understanding of health matters or cannot read, access to the program is complicated by factors not directly related to national origin or language. Under these circumstances, a recipient/covered entity should provide remedial health information to the same extent that it would provide such information to English-speakers. Similarly, a recipient/covered entity should assist LEP individuals who cannot read in understanding written materials as it would non-literate English-speakers. A non-written language precludes the translation of documents, but does not affect the responsibility of the recipient to communicate the vital information contained in the document or to provide notice of the availability of oral translation. Section 504 of the Rehabilitation Act of 1973 requires that federal fund recipients provide sign language and oral interpreters for people who have hearing impairments and provide materials in alternative formats such as in large print, braille or on tape for individuals with impairments. The Americans with Disabilities Act imposes similar requirements on health and human service providers.

11. Q. Can OCR Provide Help to Recipient/Covered Entities Who Wish To Come Into Compliance With Title VI?

A. Absolutely. For over three decades, OCR has provided substantial technical assistance to recipient/covered entities who are seeking to ensure that LEP persons can meaningfully access their programs or services. Our regional staff is prepared to work with recipients to help them meet their obligations under Title VI. As part of its technical assistance services, OCR can help identify best practices and successful strategies used by other federal fund recipients, identify sources of federal reimbursement for translation services, and point providers to other resources.

12. Q. How Will OCR Enforce Compliance by Recipient/Covered Entities With the LEP Requirements of Title VI?

A. OCR will enforce Title VI as it applies to recipient/covered entities through the procedures provided for in the Title VI regulations. The Title VI regulations provide that OCR will investigate whenever it receives a complaint, report, or other information that alleges or indicates possible noncompliance with Title VI. If the investigation results in a finding of compliance, OCR will inform the recipient/covered entity in writing of this determination, including the basis for the determination. If the investigation results in a finding of noncompliance, OCR must inform the recipient/covered entity of the noncompliance through a Letter of Findings that sets out the areas of noncompliance and the steps that must be taken to correct the noncompliance. By regulation, OCR must attempt to secure voluntary compliance through informal means. In practice, OCR has been quite successful in securing voluntary compliance and will continue these efforts. If the matter cannot be resolved informally, OCR must secure compliance through (a) the termination of Federal assistance after the recipient/covered entity has been given an opportunity for an administrative hearing, (b) referral to DOJ for injunctive relief or other enforcement proceedings, or (c) any other means authorized by law.

13. Q. Does Issuing This Guidance Mean That OCR Will Be Changing How it Enforces Compliance With Title VI?

A. No. How OCR enforces Title VI is governed by the Title VI implementing regulations. The methods and procedures used to investigate and resolve complaints, and conduct compliance reviews, have not changed.

14. Q. What Is HHS Doing To Ensure It Is Following the Guidance It Is Giving to States and Others?

A. Although legally, federally conducted programs and activities are not subject to Title VI, HHS recognizes the importance of ensuring that its programs and services are accessible to LEP persons. To this end, HHS has established a working group to assess how HHS itself is providing language access. Currently, agencies across HHS have taken a number of important steps to ensure that their programs and services are accessible to

LEP persons. For example, a number of agencies have translated important consumer materials into languages other than English. Also, several agencies have launched Spanish language web sites. In order to ensure that all HHS federally conducted programs and activities are accessible to LEP persons, the Secretary has directed the working group to develop and implement a Department-wide plan for ensuring LEP persons meaningful access to HHS programs. This internal HHS initiative was begun prior to the President's August 11, 2000, Executive Order 13166, ''Improving Access to Services for Persons with Limited English Proficiency''. The Executive Order requires Federal Agencies to develop and implement a system for ensuring LEP persons meaningful access to their federally-conducted programs. It also requires agencies to issue guidance to their recipients on the recipients' obligations to provide LEP persons meaningful access to their federally-assisted programs. HHS is a step ahead on each of the obligations outlined in the Executive Order.

Appendix B: Selected Federal and State Laws and Regulations Requiring Language Assistance

Federal Laws and Regulations

Federal laws that recognize the need for language assistance include:

1. The Voting Rights Act, which bans English-only elections and prescribes other remedial devices to ensure nondiscrimination against language minorities; [1]
2. The Food Stamp Act of 1977, which requires states to provide written and oral language assistance to LEP persons under certain circumstances; [2]
3. Judicial procedure laws that require the use of certified or otherwise qualified interpreters for LEP parties and witnesses, at the government's expense, in certain proceedings; [3]
4. The Older Americans Act, which requires state planning agencies to use outreach workers who are fluent in the languages of older LEP persons, where there is a substantial number of such persons in a planning area; [4]
5. The Substance Abuse and Mental Health Administration Reorganization Act, which requires services provided with funds under the statute to be bilingual if appropriate; [5]
6. The Disadvantaged Minority Health Improvement Act, which requires the Office of Minority Health (OMH) to enter into contracts to increase the access of LEP persons to health care by developing programs to provide bilingual or interpreter services; [6]
7. The Equal Educational Opportunities Act of 1974, which requires educational agencies to take appropriate action to accommodate the language differences that impede equal participation by students in instructional programs; [7] and
8. Regulations issued by the Health Care Financing Administration (HCFA) which require that evaluations for the mentally ill and mentally retarded be adapted to the cultural background, language, ethnic origin and means of communication of the person being evaluated.[8]

State Laws and Regulations

Many states have recognized the seriousness of the language access challenge and have enacted laws that require providers to offer language assistance to LEP persons in many service settings.[9] States that require language assistance include:

1. California, which provides that intermediate care facilities must use interpreters and other methods to ensure adequate communication between staff and patients; [10]
2. New Jersey, which provides that drug and alcohol treatment facilities must provide interpreter services if their patient population is non-English speaking; [11]
3. Pennsylvania, which provides that a patient who does not speak English should have access, where possible, to an interpreter; [12] and
4. Massachusetts, which in April 2000, enacted legislation that requires every acute care hospital to provide competent interpreter services to LEP patients in connection with all emergency room services.[13]

Medical Accreditation Organizations

1. The Joint Committee on Accreditation of Healthcare Organizations (JCAHO), which accredits hospitals and other health care institutions, requires language assistance in a number of situations. For example, its accreditation manual for hospitals provides that written notice of patients' rights must be appropriate to the patient's age, understanding and language.[14]
2. The National Committee for Quality Assurance (NCQA), which provides accreditation for managed care organizations, also requires language assistance in a variety of settings. As part of its evaluation process, the NCQA assesses managed care member materials to determine whether they are available in languages, other than English, spoken by major population groups.

October 26, 2001.

Memorandum for Heads of Departments and Agencies General Counsels and Civil Rights Directors

From: Ralph F. Boyd, Jr., Assistant Attorney General, Civil Rights Division

Subject: Executive Order 13166 (Improving Access to Services for Persons with Limited English Proficiency)

Federal agencies have recently raised several questions regarding the requirements of Executive Order 13166. This Memorandum responds to those questions. As discussed below, in view of the clarifications provided in this Memorandum, agencies that have issued Limited English Proficiency (''LEP'') guidance for their recipients pursuant to Executive Order 113166 and Title VI of the Civil Rights Act should, after notifying the Department of Justice (''DOJ''), publish a notice asking for public comment on the guidance documents they have issued. Based on the public comment it receives and this Memorandum, an agency may need to clarify or modify its existing guidance to the Department of Justice. Following approval by the Department of Justice and before finalizing its guidance, each agency should obtain public comment on their proposed guidance documents. With regard to plans for federally conducted programs and activities, agencies should review their plans in light of the clarifications provided below.

Background of Executive Order 13166

The legal basis for Executive Order 13166 is explained in policy guidance issued by the Department of Justice entitled ''Enforcement of Title VI of the Civil Rights Act of 1964—National Origin Discrimination Against Persons With Limited English Proficiency.'' 65 F.R. 50123 (August 16, 2000). This ''DOJ LEP Guidance'' was referenced in and issued concurrently with the Executive Order.

As the DOJ LEP Guidance details, Title VI of the Civil Rights Act of 1964 prohibits discrimination on the basis of race, color, or national origin in any program or activity receiving federal financial assistance. Department of Justice regulations enacted to effectuate this prohibition bar recipients of federal financial assistance from ''utiliz[ing] criteria or methods of administration which have the effect of subjecting individuals to discrimination'' because of their race, color, or national origin. These regulations thus prohibit unjustified disparate impact on the basis of national origin.

As applied, the regulations have been interpreted to require foreign language assistance in certain circumstances. For instance, where a San Francisco school district had a large number of non-English speaking students of Chinese origin, it was required to take reasonable steps to provide them with a meaningful opportunity to participate in federally funded educational

[1] 42 U.S.C. Section 1973 b(f)(1).

[2] 7 U.S.C. Section 2020(e)(1) and (2)(A).

[3] 28 U.S.C. Section 1827(d)(1)(a).

[4] 42 U.S.C. Section 3027(a)(20)(A).

[5] 42 U.S.C. Section 290aa(d)(14).

[6] 42 U.S.C. Section 300u-6(b)(7).

[7] 20 U.S.C. Section 1703(f).

[8] 42 C.F.R. Section 483.128(b).

[9] At least twenty six (26) states and the District of Columbia have enacted legislation requiring language assistance, such as interpreters and/or translated forms and other written materials, for LEP persons.

[10] 22 California Code of Regulations, Section 73501. California has a wide array of other laws and regulations that require language assistance, including those that require: (a) Intermediate nursing facilities to use interpreters and other methods to ensure adequate communications with patients, (b) adult day care centers to employ ethnic and linguistic staff as indicated by participant characteristics, (c) certified interpreters for non-English speaking persons at administrative hearings, and (d) health licensing agencies to translate patients rights information into every language spoken by 1% or more of the nursing home population.

[11] New Jersey Administrative Code Section 42A–6.7.

[12] 28 Pennsylvania Administrative Code Section 103.22(b)(14).

[13] M.G.L.A. 111, Section 25J.

[14] JCAHO, 1997 Accreditation Manual for Hospitals, Section R1.1.4.

programs. *Lau v. Nichols*, 414 U.S. 563 (1974)[1]

The Supreme Court most recently addressed the scope of the Title VI disparate impact regulations in *Alexander v. Sandoval,* 121 S. Ct. 1511 (2001). There, the Court held that there is no private right of action to enforce these regulations. It ruled that, even if the Alabama Department of Public Safety's policy of administering driver's license examinations only in English violates the Title VI regulations, a private party could not bring a case to enjoin Alabama's policy. some have interpreted *Sandoval* as impliedly striking down Title VI's disparate impact regulations and thus that part of Executive Order 13166 that applies to federally assisted programs and activities.[2]

The Department of Justice disagrees. *Sandoval* holds principally that there is no private right of action to enforce the Title VI disparate impact regulations. It did not address the validity of those regulations or Executive Order 13166. Because the legal basis for Executive Order 13166 is the Title VI disparate impact regulations and because *Sandoval* did not invalidate those regulations, it is the position of the Department of Justice that the Executive Order remains in force.

Requirements of Executive Order 13166

Federally Assisted Programs and Activities. The DOJ LEP Guidance explains that, with respect to federally assisted programs and activities, Executive Order 13166 ''does not create new obligations, but rather, clarifies existing Title VI responsibilities.'' Its purpose is to clarify for federal-funds recipients the steps those recipients can take to avoid administering programs in a way that results in discrimination on the basis of national origin in violation of the Title VI disparate impact regulations. To this end, the Order requires each Federal Agency providing federal financial assistance to explain to recipients of federal funds their obligations under the Title VI disparate impact regulations.

In developing their own LEP guidance for recipients of federal funds, an agency should balance the factors set forth in the DOJ LEP Guidance. These factors include, but are not limited to (i) the number or proportion of LEP individuals, (ii) the frequency of contact with the program, (iii) the nature and importance of the program, and (iv) the resources available.

As the DOJ LEP Guidance explains, ''a factor in determining the reasonableness of a recipient's efforts is the number or proportion of people who will be excluded from the benefits or services absent efforts to remove language barriers.'' Similarly, the frequency of contact must be considered. Where the frequency and number of contacts is so small as to preclude any significant national origin based disparate impact, agencies may conclude that the Title VI disparate impact regulations impose no substantial LEP obligations on recipients.

The nature and importance of the program is another factor. Where the denial or delay of access may have life or death implications, LEP services are of much greater importance than where denial of access results in mere inconvenience.

Resources available and costs must likewise be weighed. A small recipient with limited resources may not have to take the same steps as a larger recipient. *See* DOJ LEP Guidance at 50125. Costs, too, must be factored into this balancing test. ''Reasonable steps'' may cease to be reasonable where the costs imposed substantially exceed the benefits in light of the factors outlined in the DOJ LEP Guidance. The DOJ LEP Guidance explains that a small recipient may not have to take substantial steps ''where contact is infrequent, where the total costs of providing language services is relatively high and where the program is not crucial to an individual's day-to-day existence.'' By contrast, where number and frequency of contact is high, where the total costs for LEP services are reasonable, and where the lack of access may have life and death implicates, the availability of prompt LEP services may be critical. In these latter cases, claims based on lack of resources will need to be well substantiated.

Finally, consideration of resources available naturally implicates the ''mix'' of LEP services required. While on-the-premise translators may be needed in certain circumstances, written translation, access to centralized translation language lines or other means may be appropriate in the majority of cases. The correct balance should be based on what is both necessary to eliminate unjustified disparate impact prohibited by the Title VI regulations and reasonable in light of the factors outlined in the DOJ LEP Guidance.

Federally Conducted Programs and Activities. Executive Order 13166 also applies to federally conducted programs and activities. With respect to these, the Order requires each Federal Agency to prepare a plan to improve access to federally conducted programs and activities by eligible LEP persons. These plans, too, must be consistent with the DOJ LEP Guidance. Federal agencies should apply the same standards to themselves as they apply to their recipients.

Procedural Considerations

Administrative Procedure Act: Agency action taken pursuant to Executive Order 13166 and the DOJ LEP Guidance may be subject to the Administrative Procedure Act's (''APA'') rulemaking requirements. 5 U.S.C. § 553. Although interpretive rules, general statements of policy, and rules of agency organization and procedure are not subject to section 553, courts have ruled that any final agency action that carries the force and effect of law must comply with section 553's notice and comments requirements. *See Paralyzed Veterans of America v. D. C. Arena,* 117 F.3d 579, 588 (D.C. Cir. 1997). Agencies, therefore, should consider whether the action they have taken or that they propose to take to implement Executive Order 13166 and Title VI of the Civil Rights Act is subject to the APA's requirements. If it is, they must comply with these statutory obligations. Agencies must bear in mind, however, that Executive Order 13166 ''does not create new obligations, but rather, clarifies existing Title VI responsibilities.'' Accordingly, agency action taken pursuant to Executive Order 13166 must not impose new obligations on recipients of federal funds, but should instead help recipients to understand their existing obligations.

Executive Order 12866: Agency action taken pursuant to Executive Order 13166 and the DOJ LEP Guidance may also be subject to requirements set forth in Executive Order 12866 (*Regulatory Review and Planning,* Sept. 30, 1993). That Order directs agencies to submit to the Office of Management and Budget for review any ''significant regulatory actions'' the agency wishes to take. *See* § 6(a). Agencies, therefore, should consider whether the action they have taken or that they propose to take to implement Executive Order 13166 and Title VI of the Civil Rights Act is subject to Executive Order 12866's requirements. If it is, they should ensure that the action or proposed action complies with Executive Order 12866's obligations. With regard to federally conducted programs and activities, agencies should review their plans for their federally conducted programs in light of the clarifications below and make any necessary modifications.

Further Agency Action

Existing LEP Guidance and Plans for Federally Conducted Programs and Activities: Agencies that have already published LEP guidance pursuant to Executive Order 13166 or Title VI of the Civil Rights Act should obtain public comment on the guidance documents they have issued. Agencies should then review their existing guidance documents in view of public comment and for consistency with the clarifications provided in this Memorandum. The Justice Department's Civil Rights Division, Coordination and Review Section ((202) 307–2222), is available to assist agencies in making this determination. Should this review lead an agency to conclude that it is appropriate to clarify or modify aspects of its LEP guidance documents, it should notify the Department of Justice of that conclusion within 60 days from the date of this Memorandum. Any agency effort to clarify or modify existing LEP guidance should be completed within 120 days from the date of this Memorandum. Agencies likewise should review plans for federally conducted programs and activities in light of the above clarification.

New LEP Guidance and Plans for Federally Conducted Programs and Activities: Agencies that have not yet published LEP guidance pursuant to Executive Order 13166 and Title VI of the Civil Rights Act should submit to

[1] ''It seems obvious that the Chinese-speaking minority receive fewer benefits than the English-speaking majority from respondents' school system which denies them a meaningful opportunity to participate in the education program—all earmarks of the discrimination banned by the regulations.'' 414 U.S. at 568.

[2] *See Sandoval,* 121 S. Ct. at 1519 n.6 (''[W]e assume for purposes of this decision that § 602 confers the authority to promulgate disparate-impact regulations; * * * We cannot help observing, however, how strange it is to say that disparate-impact regulations are 'inspired by, at the service of, and inseparably intertwined with' § 601 * * * when § 601 permits the very behavior that the regulations forbid.'').

the Department of Justice, within 60 days from the date of this Memorandum, agency-specific recipient guidance that is consistent with Executive Order 13166 and the DOJ LEP Guidance, including the clarifications set forth in this Memorandum. In preparing their guidance, agencies should ensure that the action they propose to take is consistent with the requirements of the Administrative Procedure Act and Executive Order 12866. The Justice Department's Civil Rights Division, Coordination and Review Section, is available to assist agencies in preparing agency-specific guidance. Following approval by the Department of Justice and before finalizing its guidance, each agency should obtain public comment on its proposed guidance documents. Final agency-specific LEP guidance should be published within 120 days from the date of this memorandum. Agencies likewise should submit to the Department of Justice plans for federally conducted programs and activities. The Department of Justice is the central repository for these agency plans.

* * * * *

Federally assisted programs and activities may not be administered in a way that violates the Title VI regulations. Each Federal Agency is responsible for ensuring that its agency-specific guidance outlines recipients' obligations under the Title VI regulations and the steps recipients can take to avoid violating these obligations. While Executive Order 13166 requires only that Federal Agencies take steps to eliminate recipient discrimination based on national origin prohibited by Title VI, each Federal Agency is encouraged to explore whether, as a matter of policy, additional affirmative outreach to LEP individuals is appropriate. Federal Agencies likewise must eliminate national origin discrimination in their own federally conducted programs and activities. The Department of Justice is available to help agencies in reviewing and preparing agency-specific LEP guidance and federally conducted plans.

[FR Doc. 02–2467 Filed 1–31–02; 8:45 am]

BILLING CODE 4153–01–P

DEPARTMENT OF HEALTH AND HUMAN SERVICES

Centers for Medicare and Medicaid Services

[Document Identifier: CMS–R–266]

Agency Information Collection Activities: Proposed Collection; Comment Request

AGENCY: Centers for Medicare and Medicaid Services, HHS.

In compliance with the requirement of section 3506(c)(2)(A) of the Paperwork Reduction Act of 1995, the Centers for Medicare and Medicaid Services (CMS) (formerly known as the Health Care Financing Administration (HCFA)), Department of Health and Human Services, is publishing the following summary of proposed collections for public comment. Interested persons are invited to send comments regarding this burden estimate or any other aspect of this collection of information, including any of the following subjects: (1) The necessity and utility of the proposed information collection for the proper performance of the agency's functions; (2) the accuracy of the estimated burden; (3) ways to enhance the quality, utility, and clarity of the information to be collected; and (4) the use of automated collection techniques or other forms of information technology to minimize the information collection burden. *Type of Information Collection Request:* Extension of a currently approved collection; *Title of Information Collection:* Medicaid Disproportionate Share Hospital Payments—Institutions for Mental Disease; *Form No.:* HCFA–R–0266 (OMB# 0938–0746); *Use:* This PRA package announces the Federal share of disproportionate share hospital (DSH) allotments for Federal fiscal years (FFYs) 1998 through 2002. It also describes the methodology for calculating the Federal share DSH allotments for FFY 2003 and thereafter, and announces the FFY 1998 and FFY 1999 limitations on aggregate DSH payments States may make to institutions for mental disease (IMD) and other mental health facilities; *Frequency:* Annually; *Affected Public:* State, Local, or Tribal Government; *Number of Respondents:* 54; *Total Annual Responses:* 54; *Total Annual Hours:* 2,160.

To obtain copies of the supporting statement and any related forms for the proposed paperwork collections referenced above, access CMS's Web Site address at *http://www.hcfa.gov/regs/prdact95.htm,* or E-mail your request, including your address, phone number, OMB number, and CMS document identifier, to *Paperwork@hcfa.gov,* or call the Reports Clearance Office on (410) 786–1326. Written comments and recommendations for the proposed information collections must be mailed within 60 days of this notice directly to the CMS Paperwork Clearance Officer designated at the following address: CMS, Office of Information Services, Security and Standards Group, Division of CMS Enterprise Standards, Attention: Julie Brown, CMS–R–266, Room N2–14–26, 7500 Security Boulevard, Baltimore, Maryland 21244–1850.

Dated: January 9, 2002.

John P. Burke, III,

Reports Clearance Officer, Security and Standards Group, Division of CMS Enterprise Standards.

[FR Doc. 02–2442 Filed 1–31–02; 8:45 am]

BILLING CODE 4120–03–P

DEPARTMENT OF HEALTH AND HUMAN SERVICES

Centers for Medicare and Medicaid Services

[Document Identifier: CMS–2786]

Agency Information Collection Activities: Proposed Collection; Comment Request

AGENCY: Centers for Medicare and Medicaid Services, HHS.

In compliance with the requirement of section 3506(c)(2)(A) of the Paperwork Reduction Act of 1995, the Centers for Medicare and Medicaid Services (CMS) (formerly known as the Health Care Financing Administration (HCFA)), Department of Health and Human Services, is publishing the following summary of proposed collections for public comment. Interested persons are invited to send comments regarding this burden estimate or any other aspect of this collection of information, including any of the following subjects: (1) The necessity and utility of the proposed information collection for the proper performance of the agency's functions; (2) the accuracy of the estimated burden; (3) ways to enhance the quality, utility, and clarity of the information to be collected; and (4) the use of automated collection techniques or other forms of information technology to minimize the information collection burden.

Type of Information Collection Request: Extension of a currently approved collection; *Title of Information Collection:* Fire Safety Survey Report Forms and Supporting Regulations in 42 CFR 416.44, 418.100, 482.41, 483.70, 483.470; *Form No.:* CMS–2786 A–D, F, G, H, J, K, L, M, P and Q (OMB# 0938–0242); *Use:* The information from these forms will be used to make Medicare/Medicaid certification decisions. We request information in accordance with the Life Safety Code of the National Fire Protection Association. CMS then surveys all facilities based upon prior compliance history; that is, the ''good'' facilities will be surveyed less frequently. Either the short or long fire safety form will be utilized each time a health survey is performed, depending

on the circumstances; *Frequency:* Annually; *Affected Public:* State, Local, or Tribal Government; *Number of Respondents:* 53; *Total Annual Responses:* 30,000; *Total Annual Hours:* 25,000.

To obtain copies of the supporting statement and any related forms for the proposed paperwork collections referenced above, access CMS's Web Site address at *http://www.hcfa.gov/regs/prdact95.htm,* or E-mail your request, including your address, phone number, OMB number, and CMS document identifier, to *Paperwork@hcfa.gov,* or call the Reports Clearance Office on (410) 786–1326. Written comments and recommendations for the proposed information collections must be mailed within 60 days of this notice directly to the CMS Paperwork Clearance Officer designated at the following address: CMS, Office of Information Services, Security and Standards Group, Division of CMS Enterprise Standards, Attention: Julie Brown, CMS–2786, Room N2–14–26, 7500 Security Boulevard, Baltimore, Maryland 21244–1850.

Dated: January 9, 2002.

John P. Burke, III,

Reports Clearance Officer, Security and Standards Group, Division of CMS Enterprise Standards.

[FR Doc. 02–2443 Filed 1–31–02; 8:45 am]

BILLING CODE 4120–03–P

DEPARTMENT OF HEALTH AND HUMAN SERVICES

Centers for Medicare and Medicaid Services

[Document Identifier: CMS–1500]

Agency Information Collection Activities: Proposed Collection; Comment Request

AGENCY: Centers for Medicare and Medicaid Services, HHS.

In compliance with the requirement of section 3506(c)(2)(A) of the Paperwork Reduction Act of 1995, the Centers for Medicare and Medicaid Services (formerly the Health Care Financing Administration), Department of Health and Human Services, is publishing the following summary of proposed collections for public comment. Interested persons are invited to send comments regarding this burden estimate or any other aspect of this collection of information, including any of the following subjects: (1) The necessity and utility of the proposed information collection for the proper performance of the agency's functions; (2) the accuracy of the estimated burden; (3) ways to enhance the quality, utility, and clarity of the information to be collected; and (4) the use of automated collection techniques or other forms of information technology to minimize the information collection burden.

Type of Information Request: Extension of a currently approved collection; *Title of Information Collection:* Medicare/Medicaid Health Insurance Common Claim Form, Instructions, and Supporting Regulations: 42 CFR 414.40, 424.32, 424.44; *Form Number:* CMS–1500, CMS–1490U, CMS–1490S (OMB #: 0938–0008); *Use*: This form is a standardized form for use in the Medicare/Medicaid programs to apply for reimbursement for covered services. Many private insurers also use this form. Use of this form reduces cost and administrative burdens associated with professional claims because only one format needs to be used and maintained. CMS does not require exclusive use of this form for Medicaid.; *Frequency:* On occasion; *Affected Public:* State, Local or Tribal Government, Business or other for-profit, Not-for-profit institutions; *Number of Respondents:* 1,216,702; *Total Annual Responses:* 740,215,135; *Total Annual Hours Requested:* 42,941,276.

To obtain copies of the supporting statement and any related forms for the proposed paperwork collections referenced above, access CMS's Web site address at *http://www.hcfa.gov/regs/prdact95.htm,* or e-mail your request, including your address, phone number, OMB number, and CMS document identifier, to *Paperwork@hcfa.gov,* or call the Reports Clearance Office on (410) 786–1326. Written comments and recommendations for the proposed information collections must be mailed within 60 days of this notice directly to the CMS Paperwork Clearance Officer designated at the following address: CMS, Office of Information Services, Security and Standards Group, Division of CMS Enterprise Standards, Attention: Melissa Musotto, Room N2–14–26, 7500 Security Boulevard, Baltimore, Maryland 21244–1850

Dated: January 23, 2002.

John P. Burke, III,

CMS Reports Clearance Officer, CMS Office of Information Services, Security and Standards Group, Division of CMS Enterprise Standards.

[FR Doc. 02–2444 Filed 1–31–02; 8:45 am]

BILLING CODE 4120–03–P

DEPARTMENT OF HEALTH AND HUMAN SERVICES

Centers for Medicare and Medicaid Services

[Document Identifier: CMS–1450]

Agency Information Collection Activities: Proposed Collection; Comment Request

AGENCY: Centers for Medicare and Medicaid Services, HHS.

In compliance with the requirement of section 3506(c)(2)(A) of the Paperwork Reduction Act of 1995, the Centers for Medicare and Medicaid Services (formerly the Health Care Financing Administration), Department of Health and Human Services, is publishing the following summary of proposed collections for public comment. Interested persons are invited to send comments regarding this burden estimate or any other aspect of this collection of information, including any of the following subjects: (1) The necessity and utility of the proposed information collection for the proper performance of the agency's functions; (2) the accuracy of the estimated burden; (3) ways to enhance the quality, utility, and clarity of the information to be collected; and (4) the use of automated collection techniques or other forms of information technology to minimize the information collection burden.

Type of Information Request: Extension of a currently approved collection; *Title of Information Collection:* Medicare Uniform Institutional Provider Bill and Supporting Regulations in 42 CFR 424.5; Form Number: CMS–1450 (OMB #: 0938–0247); *Use:* This standardized form is used in the Medicare/Medicaid program to apply for reimbursement of covered services by all providers that accept Medicare/Medicaid assigned claims; *Frequency:* On occasion; *Affected Public:* Business or other for-profit, Not-for-profit institutions; *Number of Respondents:* 46,708; *Total Annual Responses:* 158,603,859; *Total Annual Hours Requested:* 1,735,178.

To obtain copies of the supporting statement and any related forms for the proposed paperwork collections referenced above, access CMS's Web site address at *http://www.hcfa.gov/regs/prdact95.htm,* or e-mail your request, including your address, phone number, OMB number, and CMS document identifier, to *Paperwork@hcfa.gov,* or call the Reports Clearance Office on (410) 786–1326. Written comments and recommendations for the proposed information collections must be mailed

within 60 days of this notice directly to the CMS Paperwork Clearance Officer designated at the following address: CMS, Office of Information Services, Security and Standards Group, Division of CMS Enterprise Standards Attention: Melissa Musotto, Room N2–14–26, 7500 Security Boulevard, Baltimore, Maryland 21244–1850.

Dated: January 23, 2002.

John P. Burke, III,

CMS Reports Clearance Officer, CMS Office of Information Services, Security and Standards Group, Division of CMS Enterprise Standards.

[FR Doc. 02–2445 Filed 1–31–02; 8:45 am]

BILLING CODE 4120–03–P

DEPARTMENT OF HEALTH AND HUMAN SERVICES

Centers for Medicare and Medicaid Services

[Document Identifier: CMS–R–10]

Agency Information Collection Activities: Proposed Collection; Comment Request

AGENCY: Centers for Medicare and Medicaid Services, HHS.

In compliance with the requirement of section 3506(c)(2)(A) of the Paperwork Reduction Act of 1995, the Centers for Medicare and Medicaid Services (formerly the Health Care Financing Administration), Department of Health and Human Services, is publishing the following summary of proposed collections for public comment. Interested persons are invited to send comments regarding this burden estimate or any other aspect of this collection of information, including any of the following subjects: (1) The necessity and utility of the proposed information collection for the proper performance of the agency's functions; (2) the accuracy of the estimated burden; (3) ways to enhance the quality, utility, and clarity of the information to be collected; and (4) the use of automated collection techniques or other forms of information technology to minimize the information collection burden.

Type of Information Collection Request: Extension of a currently approved collection; *Title of Information Collection:* Information Collection Requirements contained in BPD–718: Advance Directives (Medicare and Medicaid); *Form No.:* CMS–R–10; *Use:* Certain Medicare and Medicaid organizations are responsible for collecting and documenting, in medical records, whether or not an individual has executed an advance directive, this document indicates the individual's preference if he/she is incapacitated. *Frequency:* On occasion; *Affected Public:* Business or other for-profit, Not-for-profit institutions, Federal government, and State, local or tribal government; *Number of Respondents:* 34,365; *Total Annual Responses:* 34,365; *Total Annual Hours Requested:* 960,500.

To obtain copies of the supporting statement and any related forms for the proposed paperwork collections referenced above, access CMS's Web site address at *http://www.hcfa.gov/regs/prdact95.htm,* or e-mail your request, including your address, phone number, OMB number, and CMS document identifier, to *Paperwork@hcfa.gov,* or call the Reports Clearance Office on (410) 786–1326. Written comments and recommendations for the proposed information collections must be mailed within 60 days of this notice directly to the CMS Paperwork Clearance Officer designated at the following address: CMS, Office of Information Services, Security and Standards Group, Division of CMS Enterprise Standards, Attention: Melissa Musotto, Room N2–14–26, 7500 Security Boulevard, Baltimore, Maryland 21244–1850.

Dated: January 23, 2002.

John P. Burke, III,

CMS Reports Clearance Officer, CMS Office of Information Services, Security and Standards Group, Division of CMS Enterprise Standards.

[FR Doc. 02–2446 Filed 1–31–02; 8:45 am]

BILLING CODE 4120–03–P

DEPARTMENT OF HEALTH AND HUMAN SERVICES

Centers for Medicare and Medicaid Services

[Document Identifier: CMS–R–71]

Agency Information Collection Activities: Proposed Collection; Comment Request

AGENCY: Centers for Medicare and Medicaid Services, HHS.

In compliance with the requirement of section 3506(c)(2)(A) of the Paperwork Reduction Act of 1995, the Centers for Medicare and Medicaid Services (CMS) (formerly known as the Health Care Financing Administration (HCFA)), Department of Health and Human Services, is publishing the following summary of proposed collections for public comment. Interested persons are invited to send comments regarding this burden estimate or any other aspect of this collection of information, including any of the following subjects: (1) The necessity and utility of the proposed information collection for the proper performance of the agency's functions; (2) the accuracy of the estimated burden; (3) ways to enhance the quality, utility, and clarity of the information to be collected; and (4) the use of automated collection techniques or other forms of information technology to minimize the information collection burden.

Type of Information Collection Request: Extension of a currently approved collection; *Title of Information Collection:* Information Collection Requirements in HSQ–108F Assumption of Responsibilities and Supporting Regulations in 42 CFR Sections 412.44, 412.46, 431.630, 456.654, 476.71, 476.73, 476.74, 476.78; *Form No.*: CMS–R–71 (OMB# 0938–0445); *Use*: This rule establishes the review functions to be peformed by the PRO. It outlines relationships among PROs, providers, practitioners, beneficiaries, intermediaries, and carriers; *Frequency*: As needed; *Affected Public*: Business or other for-profit; *Number of Respondents*: 6,036+53; *Total Annual Responses*: 6,036; *Total Annual Hours*: 45,653.

To obtain copies of the supporting statement and any related forms for the proposed paperwork collections referenced above, access CMS's Web site address at *http://www.hcfa.gov/regs/prdact95.htm*, or e-mail your request, including your address, phone number, OMB number, and HCFA document identifier, to *Paperwork@hcfa.gov*, or call the Reports Clearance Office on (410) 786–1326. Written comments and recommendations for the proposed information collections must be mailed within 60 days of this notice directly to the CMS Paperwork Clearance Officer designated at the following address: CMS, Office of Information Services, Security and Standards Group, Division of CMS Enterprise Standards, Attention: Melissa Musotto, Room N2–14–26, 7500 Security Boulevard, Baltimore, Maryland 21244–1850.

Dated: January 23, 2002.

John P. Burke, III,

Reports Clearance Officer, Security and Standards Group, Division of CMS Enterprise Standards.

[FR Doc. 02–2452 Filed 1–31–02; 8:45 am]

BILLING CODE 4120–03–P

DEPARTMENT OF HEALTH AND HUMAN SERVICES

Centers for Medicare and Medicaid Services

[Document Identifier: CMS–10050]

Agency Information Collection Activities: Proposed Collection; Comment Request

AGENCY: Centers for Medicare and Medicaid Services, HHS.

In compliance with the requirement of section 3506(c)(2)(A) of the Paperwork Reduction Act of 1995, the Centers for Medicare and Medicaid Services (formerly the Health Care Financing Administration), Department of Health and Human Services, is publishing the following summary of proposed collections for public comment. Interested persons are invited to send comments regarding this burden estimate or any other aspect of this collection of information, including any of the following subjects: (1) The necessity and utility of the proposed information collection for the proper performance of the agency's functions; (2) the accuracy of the estimated burden; (3) ways to enhance the quality, utility, and clarity of the information to be collected; and (4) the use of automated collection techniques or other forms of information technology to minimize the information collection burden.

Type of Information Collection Request: New Collection; *Title of Information Collection:* Survey of Newly Eligible Medicare Beneficiaries; *Form No.:* CMS–10050 (OMB# 0938–NEW); *Use:* It is not enough to merely mail information about the Medicare program to each beneficiary. We need to know not only that the beneficiaries got the information, but that they understood the information and are able to use it in making choices about their Medicare participation. To this end, CMS must have measure(s) over time of what beneficiaries know and understand about the Medicare program now to be able to quantify and attribute any changes to their understanding or behavior to information/education initiatives. Measuring beneficiary information needs and knowledge over time will help us to evaluate the impact of information/education and other initiatives as well as to understand how the population is changing apart from such initiatives.; *Frequency:* Monthly; *Affected Public:* Individuals or Households; *Number of Respondents:* 3600; *Total Annual Responses:* 3600; *Total Annual Hours:* 1080.

To obtain copies of the supporting statement and any related forms for the proposed paperwork collections referenced above, access CMS's Web site address at *http://www.hcfa.gov/regs/prdact95.htm,* or e-mail your request, including your address, phone number, OMB number, and CMS document identifier, to *Paperwork@hcfa.gov,* or call the Reports Clearance Office on (410) 786–1326. Written comments and recommendations for the proposed information collections must be mailed within 60 days of this notice directly to the CMS Paperwork Clearance Officer designated at the following address: CMS, Office of Information Services, Security and Standards Group, Division of CMS Enterprise Standards, Attention: Melissa Musotto, Room N2–14–26, 7500 Security Boulevard, Baltimore, Maryland 21244–1850.

Dated: January 23, 2002.

John P. Burke, III,

CMS Reports Clearance Officer, CMS Office of Information Services, Security and Standards Group, Division of CMS Enterprise Standards.

[FR Doc. 02–2453 Filed 1–31–02; 8:45 am]

BILLING CODE 4120–03–P

DEPARTMENT OF HEALTH AND HUMAN SERVICES

Centers for Medicare and Medicaid Services

[Document Identifier: CMS–R–13]

Agency Information Collection Activities: Submission For OMB Review; Comment Request

In compliance with the requirement of section 3506(c)(2)(A) of the Paperwork Reduction Act of 1995, the Centers for Medicare and Medicaid Services (CMS), Department of Health and Human Services, has submitted to the Office of Management and Budget (OMB) the following proposal for the collection of information. Interested persons are invited to send comments regarding the burden estimate or any other aspect of this collection of information, including any of the following subjects: (1) The necessity and utility of the proposed information collection for the proper performance of the agency's functions; (2) the accuracy of the estimated burden; (3) ways to enhance the quality, utility, and clarity of the information to be collected; and (4) the use of automated collection techniques or other forms of information technology to minimize the information collection burden.

Type of Information Collection Request: Extension of a currently approved collection; *Title of Information Collection:* Conditions of Coverage for Organ Procurement Organizations (OPOs) and Supporting Regulations in 42 CFR, Section 486.301-.325; *Form No.:* CMS–R–13 (OMB# 0938–0688); *Use:* OPOs are required to submit accurate data to CMS concerning population and information on donors and organs on an annual basis in order to assure maximum effectiveness in the procurement and distribution of organs.; *Frequency:* Annually; *Affected Public:* Not-for-profit institutions; *Number of Respondents:* 59; *Total Annual Responses:* 59; *Total Annual Hours:* 1.

To obtain copies of the supporting statement for the proposed paperwork collections referenced above, access HCFA's Web site address at *http://www.hcfa.gov/regs/prdact95.htm,* or e-mail your request, including your address and phone number, to Paperwork@cms.hhs.gov, or call the Reports Clearance Office on (410) 786–1326. Written comments and recommendations for the proposed information collections must be mailed within 30 days of this notice directly to the OMB Desk Officer designated at the following address: OMB Human Resources and Housing Branch, Attention: Allison Eydt, New Executive Office Building, Room 10235, Washington, DC 20503.

Dated: November 28, 2002.

John P. Burke, III,

CMS Reports Clearance Officer, CMS, Office of Information Services, Security and Standards Group, Division of CMS Enterprise Standards.

[FR Doc. 02–2441 Filed 1–31–02; 8:45 am]

BILLING CODE 4120–03–P

DEPARTMENT OF HEALTH AND HUMAN SERVICES

Center for Medicare and Medicaid Services

[Document Identifier: CMS–R–268]

Agency Information Collection Activities: Submission for OMB Review; Comment Request

AGENCY: Center for Medicare and Medicaid Services, HHS.

In compliance with the requirement of section 3506(c)(2)(A) of the Paperwork Reduction Act of 1995, the Center for Medicare and Medicaid Services (CMS) (formerly known as the Health Care Financing Administration (HCFA), Department of Health and Human Services, is publishing the following summary of proposed collections for public comment. Interested persons are invited to send

comments regarding this burden estimate or any other aspect of this collection of information, including any of the following subjects: (1) The necessity and utility of the proposed information collection for the proper performance of the agency's functions; (2) the accuracy of the estimated burden; (3) ways to enhance the quality, utility, and clarity of the information to be collected; and (4) the use of automated collection techniques or other forms of information technology to minimize the information collection burden.

Type of Information Collection Request: Revision of a currently approved collection; *Title of Information Collection:* MS Interactive Survey Tool for www.medicare.gov; *Form Nos.:* HCFA–R–268 (OMB No. 0938–0756); *Use:* HHS has developed a survey tool using MSInteractive to obtain feedback from users accessing www.medicare.gov to guide future improvements; *Frequency:* Users will have the opportunity to complete the bounceback form twice a year; *Affected Public:* Individuals or Households, Business or other for-profit, and Not-for-profit institutions; *Number of Respondents:* 7,000; *Total Annual Responses:* 7,000; *Total Annual Hours:* 583.

To obtain copies of the supporting statement and any related forms for the proposed paperwork collections referenced above, access CMS Web site address at *http://www.hcfa.gov/regs/prdact95.htm,* or e-mail your request, including your address, phone number, OMB number, and CMS' document identifier, to *Paperwork@hcfa.gov,* or call the Reports Clearance Office on (410) 786–1326. Written comments and recommendations for the proposed information collections must be mailed within 30 days of this notice directly to the OMB desk officer: OMB Human Resources and Housing Branch, Attention: Allison Eydt, New Executive Office Building, Room 10235, Washington, DC 20503.

Dated: November 23, 2001.

Julie E. Brown,

Acting CMS Reports Clearance Officer, CMS Office of Information Services, Security and Standards Group, Division of CMS Enterprise Standards.

[FR Doc. 02–2447 Filed 1–31–02; 8:45 am]

BILLING CODE 4210–03–P

DEPARTMENT OF HEALTH AND HUMAN SERVICES

Center for Medicare and Medicaid Services

[Document Identifier: CMS–R–185]

Agency Information Collection Activities: Submission for OMB Review; Comment Request

AGENCY: Center for Medicare and Medicaid Services, HHS.

In compliance with the requirement of section 3506(c)(2)(A) of the Paperwork Reduction Act of 1995, the Center for Medicare and Medicaid Services (CMS) (formerly known as the Health Care Financing Administration (HCFA), Department of Health and Human Services, is publishing the following summary of proposed collections for public comment. Interested persons are invited to send comments regarding this burden estimate or any other aspect of this collection of information, including any of the following subjects: (1) The necessity and utility of the proposed information collection for the proper performance of the agency's functions; (2) the accuracy of the estimated burden; (3) ways to enhance the quality, utility, and clarity of the information to be collected; and (4) the use of automated collection techniques or other forms of information technology to minimize the information collection burden.

Type of Information Collection Request: Extension of a currently approved collection; *Title of Information Collection:* Granting and Withdrawal of Deeming Authority to Private Nonprofit Accreditation Organizations and of State Exemption Under State Laboratory Programs and Supporting Regulations in 42 CFR 493.551–493.557; *Form No.:* CMS–R–185 (OMB# 0938–0686); *Use:* The information required is necessary to determine whether a private accreditation organization's or State licensure program's standards and accreditation/licensure process is equal to or more stringent than those of CLIA; *Frequency:* Other: Initial application/as needed; *Affected Public:* Not-for-profit institutions, Business or other for-profit, State, local or tribal government; *Number of Respondents:* 8; *Total Annual Responses:* 76; *Total Annual Hours:* 768.

To obtain copies of the supporting statement and any related forms for the proposed paperwork collections referenced above, access CMS' Web site address at *http://www.hcfa.gov/regs/prdact95.htm,* or e-mail your request, including your address, phone number, OMB number, and CMS' document identifier, to *Paperwork@hcfa.gov,* or call the Reports Clearance Office on (410) 786–1326. Written comments and recommendations for the proposed information collections must be mailed within 30 days of this notice directly to the OMB desk officer: OMB Human Resources and Housing Branch, Attention: Allison Eydt, New Executive Office Building, Room 10235, Washington, DC 20503.

Dated: December 6, 2001.

John P. Burke, III,

CMS Reports Clearance Officer, CMS Office of Information Services, Security and Standards Group, Division of CMS Enterprise Standards.

[FR Doc. 02–2448 Filed 1–31–02; 8:45 am]

BILLING CODE 4120–03–P

DEPARTMENT OF HEALTH AND HUMAN SERVICES

Center for Medicare and Medicaid Services

[Document Identifier: CMS–1515/1527]

Agency Information Collection Activities: Submission for OMB Review; Comment Request

AGENCY: Center for Medicare and Medicaid Services, HHS.

In compliance with the requirement of section 3506(c)(2)(A) of the Paperwork Reduction Act of 1995, the Center for Medicare and Medicaid Services (CMS) (formerly known as the Health Care Financing Administration (HCFA), Department of Health and Human Services, is publishing the following summary of proposed collections for public comment. Interested persons are invited to send comments regarding this burden estimate or any other aspect of this collection of information, including any of the following subjects: (1) The necessity and utility of the proposed information collection for the proper performance of the agency's functions; (2) the accuracy of the estimated burden; (3) ways to enhance the quality, utility, and clarity of the information to be collected; and (4) the use of automated collection techniques or other forms of information technology to minimize the information collection burden.

Type of Information Collection Request: Extension of a currently approved collection; *Title of Information Collection:* Home Health Agency Survey and Deficiencies Report, Home Health Functional Assessment Instrument and Supporting Regulations

in 42 CFR 484.1–484.52; *Form No.:* HCFA–1515/1572 (OMB# 0938–0355); *Use:* In order to participate in the Medicare program as a Home Health Agency (HHA) provider, the HHA must meet Federal Standards. These forms are used to record information about patients' health and provider compliance with requirements; *Frequency:* Annually; *Affected Public:* Business or other for-profit, Not-for-profit institutions; *Number of Respondents:* 6,997; *Total Annual Responses:* 13,994; *Total Annual Hours:* 13,994.

To obtain copies of the supporting statement and any related forms for the proposed paperwork collections referenced above, access CMS'' Web Site address at *http://www.hcfa.gov/regs/prdact95.htm,* or E-mail your request, including your address, phone number, OMB number, and CMS document identifier, to *Paperwork@hcfa.gov,* or call the Reports Clearance Office on (410) 786–1326. Written comments and recommendations for the proposed information collections must be mailed within 30 days of this notice directly to the OMB desk officer: OMB Human Resources and Housing Branch, Attention: Allison Eydt, New Executive Office Building, Room 10235, Washington, DC 20503.

Dated: December 6, 2001.

John P. Burke, III,

CMS Reports Clearance Officer, CMS Office of Information Services, Security and Standards Group, Division of CMS Enterprise Standards.

[FR Doc. 02–2449 Filed 1–31–02; 8:45 am]

BILLING CODE 4120–03–P

DEPARTMENT OF HEALTH AND HUMAN SERVICES

Center for Medicare and Medicaid Services

[Document Identifier: CMS–R–306]

Agency Information Collection Activities: Submission for OMB Review; Comment Request

AGENCY: Center for Medicare and Medicaid Services, HHS.

In compliance with the requirement of section 3506(c)(2)(A) of the Paperwork Reduction Act of 1995, the Center for Medicare and Medicaid Services (CMS) (formerly known as the Health Care Financing Administration (HCFA), Department of Health and Human Services, is publishing the following summary of proposed collections for public comment. Interested persons are invited to send comments regarding this burden estimate or any other aspect of this collection of information, including any of the following subjects: (1) The necessity and utility of the proposed information collection for the proper performance of the agency's functions; (2) the accuracy of the estimated burden; (3) ways to enhance the quality, utility, and clarity of the information to be collected; and (4) the use of automated collection techniques or other forms of information technology to minimize the information collection burden.

Type of Information Collection Request: Extension of a currently approved collection; *Title of Information Collection:* Restraint and Seclusion Standards for Psychiatric Residential Treatment Facilities; *Form No.:* CMS–R–305 (OMB# 0938–0786); *Use:* Psychiatric residential treatment facilities are required to report deaths, serious injuries and attempted suicides to State Medicaid Agency and Protection and Advocacy Organization. They are also required to provide residents restraint and seclusion policy in writing and to document resident record of all activities involving use of restraint and seclusion; *Frequency:* On occasion; *Affected Public:* Business or other for-profit, Not for profit institutions; *Number of Respondents:* 500; *Total Annual Responses:* 2,600,000; *Total Annual Hours:* 877,750.

To obtain copies of the supporting statement and any related forms for the proposed paperwork collections referenced above, access CMS' Web site address at *http://www.hcfa.gov/regs/prdact95.htm,* or e-mail your request, including your address, phone number, OMB number, and CMS′ document identifier, to *Paperwork@hcfa.gov,* or call the Reports Clearance Office on (410) 786–1326. Written comments and recommendations for the proposed information collections must be mailed within 30 days of this notice directly to the OMB desk officer: OMB Human Resources and Housing Branch, Attention: Brenda Aguilar, New Executive Office Building, Room 10235, Washington, DC 20503.

Dated: December 6, 2001.

John P. Burke, III,

CMS Reports Clearance Officer, CMS Office of Information Services, Security and Standards Group, Division of CMS Enterprise Standards.

[FR Doc. 02–2450 Filed 1–31–02; 8:45 am]

BILLING CODE 4120–03–P

DEPARTMENT OF HEALTH AND HUMAN SERVICES

Center for Medicare and Medicaid Services

[Document Identifier: CMS–R–200]

Agency Information Collection Activities: Submission for OMB Review; Comment Request

AGENCY: Center for Medicare and Medicaid Services, HHS.

In compliance with the requirement of section 3506(c)(2)(A) of the Paperwork Reduction Act of 1995, the Center for Medicare and Medicaid Services (CMS) (formerly known as the Health Care Financing Administration (HCFA), Department of Health and Human Services, is publishing the following summary of proposed collections for public comment. Interested persons are invited to send comments regarding this burden estimate or any other aspect of this collection of information, including any of the following subjects: (1) The necessity and utility of the proposed information collection for the proper performance of the agency's functions; (2) the accuracy of the estimated burden; (3) ways to enhance the quality, utility, and clarity of the information to be collected; and (4) the use of automated collection techniques or other forms of information technology to minimize the information collection burden.

Type of Information Collection Request: Reinstatement, with change, of a previously approved collection for which approval has expired; *Title of Information Collection*: Health Plan Employer Data and Information Set (HEDIS) and Health Outcome Survey (HOS) and Supporting Regulations in 42 CFR 422.152; *Form No.*: CMS–R–200 (OMB# 0938–0701); *Use*: The Centers for Medicare & Medicaid Services (formerly HCFA) collects quality performance measures in order to hold the Medicare managed care industry accountable for the care being delivered, to enable quality improvement, and to provide quality information to Medicare beneficiaries in order to promote an informed choice. It is critical to CMS's mission that we collect and disseminate information that will help beneficiaries chose among health plans, contribute to improved quality of care through identification of improvement opportunities, and assist CMS in carrying out its oversight and purchasing responsibilities; *Frequency*: Annually; *Affected Public*: Business or other for-profit, Not-for-profit institutions, Individuals or households;

Number of Respondents: 313,825; *Total Annual Responses*: 313,825; *Total Annual Hours*: 571,488.

To obtain copies of the supporting statement and any related forms for the proposed paperwork collections referenced above, access CMS' Web site address at *http://www.hcfa.gov/regs/prdact95.htm*, or e-mail your request, including your address, phone number, OMB number, and CMS document identifier, to *Paperwork@hcfa.gov*, or call the Reports Clearance Office on (410) 786–1326. Written comments and recommendations for the proposed information collections must be mailed within 30 days of this notice directly to the OMB desk officer: OMB Human Resources and Housing Branch, Attention: Allison Eydt, New Executive Office Building, Room 10235, Washington, DC 20503.

Dated: January 23, 2002.

John P. Burke, III,

CMS Reports Clearance Officer, CMS Office of Information Services, Security and Standards Group, Division of CMS Enterprise Standards.

[FR Doc. 02–2451 Filed 1–31–02; 8:45 am]

BILLING CODE 4120–03–P

DEPARTMENT OF HEALTH AND HUMAN SERVICES

Center for Medicare and Medicaid Services

[Document Identifier: CMS–10044]

Agency Information Collection Activities: Submission for OMB Review; Comment Request

AGENCY: Center for Medicare and Medicaid Services, HHS.

In compliance with the requirement of section 3506(c)(2)(A) of the Paperwork Reduction Act of 1995, the Center for Medicare and Medicaid Services (CMS) (formerly known as the Health Care Financing Administration (HCFA), Department of Health and Human Services, is publishing the following summary of proposed collections for public comment. Interested persons are invited to send comments regarding this burden estimate or any other aspect of this collection of information, including any of the following subjects: (1) The necessity and utility of the proposed information collection for the proper performance of the agency's functions; (2) the accuracy of the estimated burden; (3) ways to enhance the quality, utility, and clarity of the information to be collected; and (4) the use of automated collection techniques or other forms of information technology to minimize the information collection burden.

Type of Information Collection Request: New Collection; *Title of Information Collection:* Medicare Lifestyle Modificatoin Program Demonstration; *Form No.:* CMS–10044 (OMB# 0938–NEW); *Use:* This demonstration will focus on two Medicare sponsored, lifestyle modification programs designed to reverse, reduce or ameliorate the progression of coronary artery disease (CAD) at risk for significant morbidity and mortality. This demonstration will test the cost-effectiveness and feasibility of providing payment for cardiovascular lifestyle modification program services to Medicare beneficiaries.; *Frequency:* Baseline Enrollment, 12 and 24 months; *Affected Public:* Individuals or Households; *Number of Respondents:* 2,240; *Total Annual Responses:* 1,680; *Total Annual Hours:* 1,106.

To obtain copies of the supporting statement and any related forms for the proposed paperwork collections referenced above, access CMS' Web site address at *http://www.hcfa.gov/regs/prdact95.htm,* or e-mail your request, including your address, phone number, OMB number, and CMS document identifier, to *Paperwork@hcfa.gov,* or call the Reports Clearance Office on (410) 786–1326. Written comments and recommendations for the proposed information collections must be mailed within 30 days of this notice directly to the OMB desk officer: OMB Human Resources and Housing Branch, Attention: Allison Eydt, New Executive Office Building, Room 10235, Washington, DC 20503.

Dated: January 24, 2002.

John P. Burke, III,

CMS Reports Clearance Officer, CMS Office of Information Services, Security and Standards Group, Division of CMS Enterprise Standards.

[FR Doc. 02–2454 Filed 1–31–02; 8:45 am]

BILLING CODE 4120–03–P

DEPARTMENT OF HEALTH AND HUMAN SERVICES

Food and Drug Administration

Best Practices for Reducing Transfusion Errors; Public Workshop

AGENCY: Food and Drug Administration, HHS.

ACTION: Notice of public workshop.

The Food and Drug Administration (FDA) is announcing the following public workshop: Best Practices for Reducing Transfusion Errors. The purpose of the public workshop is to discuss practices and techniques that may decrease transfusion errors, including systems and technology that can be applied to reducing transfusion errors.

Date and Time: The public workshop will be held on February 14, 2002, from 8:30 a.m. to 5 p.m., and February 15, 2002, from 8:30 a.m. to 12:30 p.m.

Location: The public workshop will be held at the Natcher Conference Center, National Institutes of Health, Bldg. 45, 45 Center Dr., 8600 Rockville Pike, Bethesda, MD.

Contact: Joseph Wilczek, Center for Biologics Evaluation and Research (HFM–302), Food and Drug Administration, 1401 Rockville Pike, Rockville, MD 20852–1448, 301–827–6129, FAX 301–827–2843.

Registration: Send registration information (including name, title, firm name, address, telephone, and fax number) to the contact person by February 5, 2002. Onsite registration on a space available basis will begin at 7:30 a.m. on the days of the workshop. There is no registration fee. If you need special accommodations due to a disability, please contact Joseph Wilczek at least 7 days in advance.

Transcripts: Transcripts of the public workshop may be requested in writing from the Freedom of Information Office (HFI–35), Food and Drug Administration, 5600 Fishers Lane, rm. 12A–16, Rockville, MD 20857, approximately 15 working days after the meeting at a cost of 10 cents per page. The public workshop transcript will also be available on the Internet at http://www.fda.gov/cber/minutes/workshop-min.htm.

SUPPLEMENTARY INFORMATION: FDA and the Agency for Healthcare Research and Quality, Department of Health and Human Services, are cosponsoring a public workshop on avoiding errors in transfusion medicine. On the first day of the workshop, topics to be discussed include: Patient and medication identification, errors in manufacturing and testing of blood and blood components, system errors and cultural factors, and the role of product deviation reporting in reducing transfusion errors. The second day of the workshop will address current as well as future technology trends that should help prevent transfusion errors. The public workshop agenda is posted on the Internet at http://www.fda.gov/cber/meetings/trnfsnerr021402.htm.

Dated: January 28, 2002.

Margaret M. Dotzel,

Associate Commissioner for Policy.

[FR Doc. 02–2550 Filed 1–31–02; 8:45 am]

BILLING CODE 4160–01–S

DEPARTMENT OF HEALTH AND HUMAN SERVICES

Substance Abuse and Mental Health Services Administration

Current List of Laboratories Which Meet Minimum Standards To Engage in Urine Drug Testing for Federal Agencies

AGENCY: Substance Abuse and Mental Health Services Administration, HHS.

ACTION: Notice.

SUMMARY: The Department of Health and Human Services notifies Federal agencies of the laboratories currently certified to meet standards of subpart C of Mandatory Guidelines for Federal Workplace Drug Testing Programs (59 FR 29916, 29925). A notice listing all currently certified laboratories is published in the **Federal Register** during the first week of each month. If any laboratory's certification is suspended or revoked, the laboratory will be omitted from subsequent lists until such time as it is restored to full certification under the Guidelines.

If any laboratory has withdrawn from the National Laboratory Certification Program during the past month, it will be listed at the end, and will be omitted from the monthly listing thereafter.

This notice is also available on the Internet at the following Web sites: *http://workplace.samhsa.gov;http://www.drugfreeworkplace.gov;*and *http://www.health.org/workplace.*

FOR FURTHER INFORMATION CONTACT: Mrs. Giselle Hersh or Dr. Walter Vogl, Division of Workplace Programs, 5600 Fishers Lane, Rockwall 2 Building, Room 815, Rockville, Maryland 20857; Tel.: (301) 443–6014, Fax: (301) 443–3031.

SUPPLEMENTARY INFORMATION: Mandatory Guidelines for Federal Workplace Drug Testing were developed in accordance with Executive Order 12564 and section 503 of Pub. L. 100–71. Subpart C of the Guidelines, ''Certification of Laboratories Engaged in Urine Drug Testing for Federal Agencies,'' sets strict standards which laboratories must meet in order to conduct urine drug testing for Federal agencies. To become certified an applicant laboratory must undergo three rounds of performance testing plus an on-site inspection.

To maintain that certification a laboratory must participate in a quarterly performance testing program plus periodic, on-site inspections.

Laboratories which claim to be in the applicant stage of certification are not to be considered as meeting the minimum requirements expressed in the HHS Guidelines. A laboratory must have its letter of certification from SAMHSA, HHS (formerly: HHS/NIDA) which attests that it has met minimum standards.

In accordance with Subpart C of the Guidelines, the following laboratories meet the minimum standards set forth in the Guidelines:

ACL Laboratories, 8901 W. Lincoln Ave., West Allis, WI 53227, 414–328–7840/800–877–7016 (Formerly: Bayshore Clinical Laboratory)

ACM Medical Laboratory, Inc., 160 Elmgrove Park, Rochester, NY 14624, 716–429–2264

Advanced Toxicology Network, 3560 Air Center Cove, Suite 101, Memphis, TN 38118, 901–794–5770/888–290–1150

Aegis Analytical Laboratories, Inc., 345 Hill Ave., Nashville, TN 37210, 615–255–2400

Alliance Laboratory Services, 3200 Burnet Ave., Cincinnati, OH 45229, 513–585–9000 (Formerly: Jewish Hospital of Cincinnati, Inc.)

American Medical Laboratories, Inc., 14225 Newbrook Dr., Chantilly, VA 20151, 703–802–6900

Associated Pathologists Laboratories, Inc., 4230 South Burnham Ave., Suite 250, Las Vegas, NV 89119–5412, 702–733–7866/800–433–2750

Baptist Medical Center—Toxicology Laboratory, 9601 I–630, Exit 7, Little Rock, AR 72205–7299, 501–202–2783 (Formerly: Forensic Toxicology Laboratory Baptist Medical Center)

Clinical Laboratory Partners, LLC, 129 East Cedar St., Newington, CT 06111, 860–696–8115 (Formerly: Hartford Hospital Toxicology Laboratory)

Clinical Reference Lab, 8433 Quivira Rd., Lenexa, KS 66215–2802, 800–445–6917

Cox Health Systems, Department of Toxicology, 1423 North Jefferson Ave., Springfield, MO 65802, 800–876–3652/417–269–3093 (Formerly: Cox Medical Centers)

Diagnostic Services Inc., dba DSI, 12700 Westlinks Drive, Fort Myers, FL 33913, 941–561–8200/800–735–5416

Doctors Laboratory, Inc., P.O. Box 2658, 2906 Julia Dr., Valdosta, GA 31602, 912–244–4468

DrugProof, Divison of Dynacare, 543 South Hull St., Montgomery, AL 36103, 888–777–9497/334–241–0522 (Formerly: Alabama Reference Laboratories, Inc.)

DrugProof, Division of Dynacare/Laboratory of Pathology, LLC, 1229 Madison St., Suite 500, Nordstrom Medical Tower, Seattle, WA 98104, 206–386–2672/800–898–0180 (Formerly: Laboratory of Pathology of Seattle, Inc., DrugProof, Division of Laboratory of Pathology of Seattle, Inc.)

DrugScan, Inc., P.O. Box 2969, 1119 Mearns Rd., Warminster, PA 18974, 215–674–9310

Dynacare Kasper Medical Laboratories *, 14940–123 Ave., Edmonton, Alberta, Canada T5V 1B4, 780–451–3702/800–661–9876

ElSohly Laboratories, Inc., 5 Industrial Park Dr., Oxford, MS 38655, 662–236–2609

Express Analytical Labs, 3405 7th Avenue, Suite 106, Marion, IA 52302, 319–377–0500

Gamma-Dynacare Medical Laboratories *, A Division of the Gamma-Dynacare Laboratory Partnership, 245 Pall Mall St., London, ONT, Canada N6A 1P4, 519–679–1630

General Medical Laboratories, 36 South Brooks St., Madison, WI 53715, 608–267–6267

Kroll Laboratory Specialists, Inc., 1111 Newton St., Gretna, LA 70053, 504–361–8989/800–433–3823 (Formerly: Laboratory Specialists, Inc.)

LabOne, Inc., 10101 Renner Blvd., Lenexa, KS 66219, 913–888–3927/800–728–4064 (Formerly: Center for Laboratory Services, a Division of LabOne, Inc.)

Laboratory Corporation of America Holdings, 7207 N. Gessner Road, Houston, TX 77040, 713–856–8288/800–800–2387

Laboratory Corporation of America Holdings, 69 First Ave., Raritan, NJ 08869, 908–526–2400/800–437–4986 (Formerly: Roche Biomedical Laboratories, Inc.)

Laboratory Corporation of America Holdings, 1904 Alexander Drive, Research Triangle Park, NC 27709, 919–572–6900/800–833–3984 (Formerly: LabCorp Occupational Testing Services, Inc., CompuChem Laboratories, Inc.; CompuChem Laboratories, Inc., A Subsidiary of Roche Biomedical Laboratory; Roche CompuChem Laboratories, Inc., A Member of the Roche Group)

Laboratory Corporation of America Holdings, 10788 Roselle Street, San Diego, CA 92121, 800–882–7272 (Formerly: Poisonlab, Inc.)

Laboratory Corporation of America Holdings, 1120 Stateline Road West, Southaven, MS 38671, 866–827–8042/800–233–6339 (Formerly: LabCorp Occupational Testing Services, Inc., MedExpress/National Laboratory Center)

Marshfield Laboratories, Forensic Toxicology Laboratory, 1000 North Oak Ave., Marshfield, WI 54449, 715–389–3734/800–331–3734

MAXXAM Analytics Inc.*, 5540 McAdam Rd., Mississauga, ON, Canada L4Z 1P1, 905–890–2555 (Formerly: NOVAMANN (Ontario) Inc.)

Medical College Hospitals Toxicology Laboratory, Department of Pathology, 3000 Arlington Ave., Toledo, OH 43699, 419–383–5213

MedTox Laboratories, Inc., 402 W. County Rd. D, St. Paul, MN 55112, 651–636–7466/800–832–3244

MetroLab-Legacy Laboratory Services, 1225 NE 2nd Ave., Portland, OR 97232, 503–413–5295/800–950–5295

Minneapolis Veterans Affairs Medical Center, Forensic Toxicology Laboratory, 1 Veterans Drive, Minneapolis, Minnesota 55417, 612–725–2088

National Toxicology Laboratories, Inc., 1100 California Ave., Bakersfield, CA 93304, 661–322–4250/800–350–3515

Northwest Drug Testing, a division of NWT Inc., 1141 E. 3900 South, Salt Lake City, UT 84124, 801–293–2300/800–322–3361 (Formerly: NWT Drug Testing, NorthWest Toxicology, Inc.)

One Source Toxicology Laboratory, Inc., 1705 Center Street, Deer Park, TX 77536, 713–920–2559 (Formerly: University of Texas Medical Branch, Clinical Chemistry Division; UTMB Pathology-Toxicology Laboratory)

Oregon Medical Laboratories, P.O. Box 972, 722 East 11th Ave., Eugene, OR 97440–0972, 541–687–2134

Pacific Toxicology Laboratories, 6160 Variel Ave., Woodland Hills, CA 91367, 818–598–3110/800–328–6942 (Formerly: Centinela Hospital Airport Toxicology Laboratory)

Pathology Associates Medical Laboratories, 110 West Cliff Drive, Spokane, WA 99204, 509–755–8991/800–541–7891x8991

PharmChem Laboratories, Inc., 4600 N. Beach, Haltom City, TX 76137, 817–605–5300 (Formerly: PharmChem Laboratories, Inc., Texas Division; Harris Medical Laboratory)

Physicians Reference Laboratory, 7800 West 110th St., Overland Park, KS 66210, 913–339–0372/800–821–3627

Quest Diagnostics Incorporated, 3175 Presidential Dr., Atlanta, GA 30340, 770–452–1590 (Formerly: SmithKline Beecham Clinical Laboratories, SmithKline Bio-Science Laboratories)

Quest Diagnostics Incorporated, 4770 Regent Blvd., Irving, TX 75063, 800–842–6152 (Moved from the Dallas location on 03/31/01; Formerly: SmithKline Beecham Clinical Laboratories, SmithKline Bio-Science Laboratories)

Quest Diagnostics Incorporated, 400 Egypt Rd., Norristown, PA 19403, 610–631–4600/877–642–2216 (Formerly: SmithKline Beecham Clinical Laboratories, SmithKline Bio-Science Laboratories)

Quest Diagnostics Incorporated, 506 E. State Pkwy., Schaumburg, IL 60173, 800–669–6995/847–885–2010 (Formerly: SmithKline Beecham Clinical Laboratories, International Toxicology Laboratories)

Quest Diagnostics Incorporated, 7470 Mission Valley Rd., San Diego, CA 92108–4406, 619–686–3200/800–446–4728 (Formerly: Nichols Institute, Nichols Institute Substance Abuse Testing (NISAT), CORNING Nichols Institute, CORNING Clinical Laboratories)

Quest Diagnostics Incorporated, 7600 Tyrone Ave., Van Nuys, CA 91405, 818–989–2520/800–877–2520 (Formerly: SmithKline Beecham Clinical Laboratories)

Scientific Testing Laboratories, Inc., 463 Southlake Blvd., Richmond, VA 23236, 804–378–9130

S.E.D. Medical Laboratories, 5601 Office Blvd., Albuquerque, NM 87109, 505–727–6300/800–999–5227

South Bend Medical Foundation, Inc., 530 N. Lafayette Blvd., South Bend, IN 46601, 219–234–4176

Southwest Laboratories, 2727 W. Baseline Rd., Tempe, AZ 85283, 602–438–8507/800–279–0027

Sparrow Health System, Toxicology Testing Center, St. Lawrence Campus, 1210 W. Saginaw, Lansing, MI 48915, 517–377–0520 (Formerly: St. Lawrence Hospital & Healthcare System)

St. Anthony Hospital Toxicology Laboratory, 1000 N. Lee St., Oklahoma City, OK 73101, 405–272–7052

Toxicology & Drug Monitoring Laboratory, University of Missouri Hospital & Clinics, 2703 Clark Lane, Suite B, Lower Level, Columbia, MO 65202, 573–882–1273

Toxicology Testing Service, Inc., 5426 N.W. 79th Ave., Miami, FL 33166, 305–593–2260

Universal Toxicology Laboratories (Florida), LLC, 5361 NW 33rd Avenue, Fort Lauderdale, FL 33309, 954–717–0300, 800–419–7187x419 (Formerly: Integrated Regional Laboratories, Cedars Medical Center, Department of Pathology)

Universal Toxicology Laboratories, LLC, 9930 W. Highway 80, Midland, TX 79706, 915–561–8851/888–953–8851

U.S. Army Forensic Toxicology Drug Testing Laboratory, Fort Meade, Building 2490, Wilson Street, Fort George G. Meade, MD 20755–5235, 301–677–7085

* The Standards Council of Canada (SCC) voted to end its Laboratory Accreditation Program for Substance Abuse (LAPSA) effective May 12, 1998. Laboratories certified through that program were accredited to conduct forensic urine drug testing as required by U.S. Department of Transportation (DOT) regulations. As of that date, the certification of those accredited Canadian laboratories will continue under DOT authority. The responsibility for conducting quarterly performance testing plus periodic on-site inspections of those LAPSA-accredited laboratories was transferred to the U.S. DHHS, with the DHHS' National Laboratory Certification Program (NLCP) contractor continuing to have an active role in the performance testing and laboratory inspection processes. Other Canadian laboratories wishing to be considered for the NLCP may apply directly to the NLCP contractor just as U.S. laboratories do.

Upon finding a Canadian laboratory to be qualified, the DHHS will recommend that DOT certify the laboratory (Federal Register, 16 July 1996) as meeting the minimum standards of the ''Mandatory Guidelines for Workplace Drug Testing'' (59 FR, 9 June 1994, Pages 29908–29931). After receiving the DOT certification, the laboratory will be included in the monthly list of DHHS certified laboratories and participate in the NLCP certification maintenance program.

Richard Kopanda,

Executive Officer, Substance Abuse and Mental Health Services Administration.

[FR Doc. 02–2315 Filed 1–31–02; 8:45 am]

BILLING CODE 4160–20–P

DEPARTMENT OF HOUSING AND URBAN DEVELOPMENT

[Docket No. FR–4730–N–05]

Federal Property Suitable as Facilities To Assist the Homeless

AGENCY: Office of the Assistant Secretary for Community Planning and Development, HUD.

ACTION: Notice.

SUMMARY: This notice identifies unutilized, underutilized, excess, and surplus Federal property reviewed by HUD for suitability for possible use to assist the homeless.

FOR FURTHER INFORMATION CONTACT: Mark Johnston, room 7266, Department of Housing and Urban Development, 451 Seventh Street, SW., Washington, DC 20410; telephone (202) 708–1234; TTY number for the hearing- and speech-impaired, (202) 708–2565 (these telephone numbers are not toll-free), or call the toll-free Title V information line at 1–800–927–7588.

SUPPLEMENTARY INFORMATION: In accordance with 24 CFR part 581 and section 501 of the Stewart B. McKinney Homeless Assistance Act (42 U.S.C. 11411), as amended, HUD is publishing this Notice to identify Federal buildings and other real property that HUD has reviewed for suitability for use to assist the homeless. The properties were reviewed using information provided to HUD by Federal landholding agencies regarding unutilized and underutilized buildings and real property controlled by such agencies or by GSA regarding its inventory of excess or surplus Federal property. This Notice is also published in order to comply with the December 12, 1988 Court Order in *National Coalition for the Homeless* v. *Veterans Administration,* No. 88–2503–OG (D.D.C.).

Properties reviewed are listed in this Notice according to the following categories: Suitable/available, suitable/unavailable, suitable/to be excess, and unsuitable. The properties listed in the three suitable categories have been reviewed by the landholding agencies, and each agency has transmitted to HUD: (1) Its intention to make the property available for use to assist the homeless, (2) its intention to declare the property excess to the agency's needs, or (3) a statement of the reasons that the property cannot be declared excess or made available for use as facilities to assist the homeless.

Properties listed as suitable/available will be available exclusively for homeless use for a period of 60 days from the date of this Notice. Where

property is described as for ''off-site use only'' recipients of the property will be required to relocate the building to their own site at their own expense. Homeless assistance providers interested in any such property should send a written expression of interest to HHS, addressed to Brian Rooney, Division of Property Management, Program Support Center, HHS, room 5B–41, 5600 Fishers Lane, Rockville, MD 20857; (301) 443–2265. (This is not a toll-free number.) HHS will mail to the interested provider an application packet, which will include instructions for completing the application. In order to maximize the opportunity to utilize a suitable property, providers should submit their written expressions of interest as soon as possible. For complete details concerning the processing of applications, the reader is encouraged to refer to the interim rule governing this program, 24 CFR part 581.

For properties listed as suitable/to be excess, that property may, if subsequently accepted as excess by GSA, be made available for use by the homeless in accordance with applicable law, subject to screening for other Federal use. At the appropriate time, HUD will publish the property in a Notice showing it as either suitable/available or suitable/unavailable.

For properties listed as suitable/unavailable, the landholding agency has decided that the property cannot be declared excess or made available for use to assist the homeless, and the property will not be available.

Properties listed as unsuitable will not be made available for any other purpose for 20 days from the date of this Notice. Homeless assistance providers interested in a review by HUD of the determination of unsuitability should call the toll free information line at 1–800–927–7588 for detailed instructions or write a letter to Mark Johnston at the address listed at the beginning of this Notice. Included in the request for review should be the property address (including zip code), the date of publication in the **Federal Register**, the landholding agency, and the property number.

For more information regarding particular properties identified in this Notice (*i.e.,* acreage, floor plan, existing sanitary facilities, exact street address), providers should contact the appropriate landholding agencies at the following addresses: DOT: Mr. Rugene Spruill, Space Management, SVC–140, Transportation Administrative Service Center, Department of Transportation 400 7th Street, SW., Room 2310, Washington, DC 20590; (202) 366–4246; ENERGY: Mr. Tom Knox, Department of Energy, Office of Engineering & Construction Management, CR–80, Washington, DC 20585; (202) 586–8715; NAVY: Mr. Charles C. Cocks, Director, Department of the Navy, Real Estate Policy Division, Naval Facilities Engineering Command, Washington Navy Yard, 1322 Patterson Ave., SE., Suite 1000, Washington, DC 20374–5065; (202) 685–9200; (These are not toll-free numbers).

Dated: January 24, 2002.

John D. Garrity,

Directors, Office of Special Needs, Assistance Programs.

TITLE V, FEDERAL SURPLUS PROPERTY PROGRAM FEDERAL REGISTER REPORT FOR 2/1/02

Unsuitable Properties

Buildings (by State)

Alaska

Bldgs. T03, T04, 002
Loran Station
Kodiak Co: Kodiak Island AK 99619–
Landholding Agency: DOT
Property Number: 87200210006
Status: Excess
Reason: Extensive deterioration

California

Bldg. PM54
Naval Air Station
Point Mugu Co: Ventura CA 93042–5000
Landholding Agency: Navy
Property Number: 77200210001
Status: Unutilized
Reason: Extensive deterioration

Bldg. PM56
Naval Air Station
Point Mugu Co: Ventura CA 93042–5000
Landholding Agency: Navy
Property Number: 77200210002
Status: Unutilized
Reason: Extensive deterioration

Bldg. PM754
Naval Air Station
Point Mugu Co: Ventura CA 93042–5000
Landholding Agency: Navy
Property Number: 77200210003
Status: Unutilized
Reason: Extensive deterioration

Bldg. PM777
Naval Air Station
Point Mugu Co: Ventura CA 93042–5000
Landholding Agency: Navy
Property Number: 77200210004
Status: Unutilized
Reason: Extensive deterioration

Bldg. PM7007
Naval Air Station
Point Mugu Co: Ventura CA 93042–5000
Landholding Agency: Navy
Property Number: 77200210005
Status: Unutilized
Reason: Extensive deterioration

Bldg. 303
Naval Weapons Station
Fallbrook Co: CA 92028–3187
Landholding Agency: Navy
Property Number: 77200210006
Status: Unutilized
Reason: Extensive deterioration

Bldg. 1233
Marine Corps Base
Camp Pendleton Co: CA 92055–
Landholding Agency: Navy
Property Number: 77200210007
Status: Excess
Reason: Extensive deterioration

Bldg. 1345
Marine Corps Base
Camp Pendleton Co: CA 92055–
Landholding Agency: Navy
Property Number: 77200210008
Status: Excess
Reason: Extensive deterioration

Bldg. 1643
Marine Corps Base
Camp Pendleton Co: CA 92055–
Landholding Agency: Navy
Property Number: 77200210009
Status: Excess
Reason: Extensive deterioration

Bldg. 1644
Marine Corps Base
Camp Pendleton Co: CA 92055–
Landholding Agency: Navy
Property Number: 77200210010
Status: Excess
Reason: Extensive deterioration

Bldg. 1672
Marine Corps Base
Camp Pendleton Co: CA 92055–
Landholding Agency: Navy
Property Number: 77200210011
Status: Excess
Reason: Extensive deterioration

Bldg. 1673
Marine Corps Base
Camp Pendleton Co: CA 92055–
Landholding Agency: Navy
Property Number: 77200210012
Status: Excess
Reason: Extensive deterioration

Bldg. 2669
Marine Corps Base
Camp Pendleton Co: CA 92055–
Landholding Agency: Navy
Property Number: 77200210013
Status: Excess
Reason: Extensive deterioration

Bldg. 13116
Marine Corps Base
Camp Pendleton Co: CA 92055–
Landholding Agency: Navy
Property Number: 77200210014
Status: Excess
Reason: Extensive deterioration

Bldg. 6
Navy Marine Corps Rsv Ctr
Sacramento Co: CA 95828–
Landholding Agency: Navy
Property Number: 77200210017
Status: Unutilized
Reason: Secured Area

Bldg. 30
Coast Guard Group
One Yerba Buena Island
San Francisco Co: CA 94118–
Landholding Agency: DOT
Property Number: 87200210007
Status: Underutilized
Reasons: Within 2000 ft. of flammable or explosive material; Secured Area

Bldg. 40
Coast Guard Group
One Yerba Buena Island
San Francisco Co: CA 94118–
Landholding Agency: DOT
Property Number: 87200210008
Status: Unutilized
Reasons: Within 2000 ft. of flammable or explosive material; Secured Area

Bldg. 75
Coast Guard Group
One Yerba Buena Island
San Francisco Co: CA 94118–
Landholding Agency: DOT
Property Number: 87200210009
Status: Underutilized
Reasons: Within 2000 ft. of flammable or explosive material; Secured Area

Bldg. 270
Coast Guard Group
One Yerba Buena Island
San Francisco Co: CA 94118–
Landholding Agency: DOT
Property Number: 87200210010
Status: Unutilized
Reasons: Within 2000 ft. of flammable or explosive material; Secured Area

Pennsylvania

Bldg. 43
Naval Foundry & Propeller Center
Philadelphia Co: PA 19112–
Landholding Agency: Navy
Property Number: 77200210015
Status: Excess
Reason: Extensive deterioration

Bldg. 53
Naval Foundry & Propeller Center
Philadelphia Co: PA 19112–
Landholding Agency: Navy
Property Number: 77200210016
Status: Excess
Reason: Extensive deterioration.

Tennessee

Bldg. 9949–31
Y–12 Natl Security Complex
Oak Ridge Co: Anderson TN 37831–
Landholding Agency: Energy
Property Number: 41200210001
Status: Unutilized
Reason: Secured Area

Bldg. SC–14
ORISE Scarboro Operations Site
Oak Ridge Co: Anderson TN 37831–
Landholding Agency: Energy
Property Number: 41200210002
Status: Excess
Reason: Secured Area

[FR Doc. 02–2178 Filed 1–31–02; 8:45 am]

BILLING CODE 4210–29–M

DEPARTMENT OF THE INTERIOR

Office of the Secretary

Bureau of Land Management

Fish and Wildlife Service

Resubmission of Comments; Interruption of Mail Service

AGENCY: Fish and Wildlife Service and the Bureau of Land Management.

ACTION: Resubmission of comments on specific notices.

SUMMARY: The Office of the Secretary, along with the Fish and Wildlife Service and the Bureau of Land Management give notice to the public of the opportunity to resubmit comments on specific notices. This action is necessitated by the possibility that some comments that were submitted by the public in response to notices may not have been timely received by the identified bureaus due to the shutdown of the Brentwood Postal Facility in Washington, DC, on October 21, 2001. The postal facility was closed because of the threat of anthrax contamination. This action is also necessitated because the Department's internet access, including receipt of outside e-mail, has been shut down under court order until further notice. Comments which may have been sent to the Department by email since December 4, 2001, have not been received by the Department and should be resubmitted by mail to the addresses specified herein.

DATES: Resubmittal of comments on identified notices must be postmarked no later than February 15, 2002.

ADDRESSES: The addresses for the resubmittal of comments are as follows:

- Fish and Wildlife Service, 4401 North Fairfax Drive, Office of Policy, Directives and Management, Arlington, VA 22203, unless otherwise noted.
- Bureau of Land Management, Eastern States Office, 7450 Boston Blvd., Springfield, VA 22135, unless otherwise noted.

FOR FURTHER INFORMATION CONTACT: Duncan L. Brown, Office of the Secretary, Washington, DC, 202/208–4582.

SUPPLEMENTARY INFORMATION: The purpose of this document is to allow interested parties the opportunity to resubmit comments they may have sent to the Washington, DC, offices of the Fish and Wildlife Service and the Bureau of Land Management on certain identified notices. This action is taken due to the closure of the Brentwood Postal Facility, Washington, DC, has caused a delay in the delivery of mail to the Department's Washington, DC, agency addresses. In addition, the Department's internet access, including receipt of outside email, has been shut down under court order until further notice and comments which were sent by email to the Department by email since December 4, 2001, have not been received by the Department. To guarantee the collection of all responsive comments, the Department has decided that it will extend to all interested parties the opportunity to resubmit their written comments on the identified notices to the agency addresses identified in the **ADDRESSES** section of this document. The affected notices are identified as follows:

Notices

FWS Light Goose Management—Availability of DEIS
FWS ESA Permit Applications
FWS ESA/MMPA Permit Applications
FWS Availability of EA/Application for ITP—Deltona, Florida, Florida Scrub-Jay, Eastern Indigo Snake
FWS Availability of EA/HCP/Application for ITP—Interagency Task Force—Six Points Road, Indiana
FWS ITP—Houston Toad—Lower Colorado River Authority
FWS Availability of Draft EA/CCP for Salinas River NWR
FWS Wild Bird Conservation Act Permit Application
FWS Preparation of EIS for South Subregion NCCP/HCP—Orange County, CA
FWS Incidental Take Permit Request, Houston Toad
FWS Receipt of Application for ITP—Palmas del Mar, PR
FWS Availability of CCP/EA for Antioch Dunes NWR
FWS Availability of Draft EA, June Sucker Recovery Plan
FWS Availability of CCP/EA for Seedskadee NWR
FWS Availability of of EA/HCP; ITP Application—Golf Highlands/Fort Morgan—Turtles and Beach mouse
FWS Availability of CCAA—Georgia Power—Robust Redhorse
FWS Availability of Draft EA/RP for Charles George Landfill Superfund Site
FWS Availability of Draft EA/Application for Incidental Take—Pinery Glen, CO
FWS Availability of EA/Receipt of Application for Incidental Take—Riverside Fairy Shrimp—Redhawk
FWS Application to Amend West Fork Timber Incidental Take Permit—Canada Lynx/Bull Trout
FWS Availability of EA/HCP—Bald Eagles—The Woodlands, Texas
FWS Draft EIS—Light Goose Management
FWS Draft Southwestern Willow Flycatcher Recovery Plan—Reopening of Comment Period
FWS PRA—Employee Exit Survey (Former Employees)
FWS Intent to Prepare Comp. Conservation

Plan/NEPA Document—Sacramento River NWR
FWS Intent to Prepare EIS/Scoping Meeting—Roosevelt HCP
FWS Availability of Draft Recovery Plan—Pacific Coast Population of Western Snowy Plover
FWS PRA—Marine Mammals—Incidental Take
FWS Intent to Prepare Comp. Conservation Plans—Arrowwood and Sand Lake NWRs
FWS Availability of Draft EA/Incidental Take Permit Applications, Flaglere County, Florida
FWS Intent to Prepare EIS/EIR—South Subregion Natural Community Conservation Plan/HCP, Orange County, CA
FWS Preparation of EIS/EIS—W. Riverside County HCP
FWS Submission—Refuge Special Use Permits
FWS Environmental Assessment—Major Amendment to San Diego Subarea Plan for Multiple Species Conservation Program Plan
FWS Status Review—Wasatch Front Population of the spotted frog
FWS PRA—State Certification of Expenditures
FWS Sonoran Pronghorn Recovery Plan—Criteria and Time Estimate for Recovery
FWS Availability of Proposed Peregrine Falcon Monitoring Plan
FWS Availability of EIS/Safe Harbor Application—San Joaquin Kit Fox
FWS Availability of EIS on Light Goose Management
FWS Availability of Draft CCP/EA—Necedah NWR, WI
FWS Availability of Draft Implementation Plan for Falconry Take of Nestling Peregrine Falcons
FWS Reopening of Comment Period—4 Colorado Basin Endangered Fish Species
FWS Availability of Draft EA for Mandalay Bank Protection Project, LA
FWS Intent to Prepare Comp. Conservation Plan/NEPA Document—Sacramento River NWR
FWS Intent to Prepare EIS/Scoping Meeting—Roosevelt HCP
FWS Availability of Draft Recovery Plan—Pacific Coast Population of Western Snowy Plover
FWS PRA—Marine Mammals—Incidental Take
FWS Availability of Draft EA/Incidental Take Permit Application, Flagler County, Florida
FWS Intent to Prepare EIS/EIR—South Subregion Natural Community Conservation Plan/HCP, Orange County, CA
FWS Preparation of EIS/EIR—W. Riverside County HCP
FWS PRA Submission—Refuge Special Use Permits
FWS Environmental Assessment—Major Amendments to San Diego Subarea Plan for Multiple Species Conservation Program Plan
FWS Status Review—Wasatch Front Population of the spotted frog
FWS PRA—State Certification of Expenditures
BLM Availability and Protest Period for Planning Analysis/EA for Lands in Arkansas and Louisiana
BLM Availability of FEIS for Pueblo of San Felipe Land Exchange
BLM Availability and Protest Period for Proposed Planning Analysis to Acquire Land in Fairfax County, Virginia by BLM
BLM Availability of Proposed Southeastern Oregon RMP and FEIS and Proposed Area of Critical Environmental Concern Designations
BLM Cadiz Groundwater Storage and Dry-Year Supply Program FEIS (EPA Notice published October 5, 2001)

Dated: January 15, 2002.

P. Lynn Scarlett,

Assistant Secretary—Policy Management and Budget.

[FR Doc. 02–2468 Filed 1–31–02; 8:45 am]

BILLING CODE 4310–RK–M

DEPARTMENT OF THE INTERIOR

Fish and Wildlife Service

Notice of Intent To Prepare Comprehensive Conservation Plan and Environmental Impact Statement for the Great Dismal Swamp National Wildlife Refuge

SUMMARY: This amends the previous Notice of Intent published October 9, 2001. This notice advises the public that the U.S. Fish and Wildlife Service (Service) intends to gather information necessary to prepare a Comprehensive Conservation Plan (CCP) and Environmental Impact Statement (EIS) pursuant to the National Environmental Policy Act (NEPA) of 1969, and its implementing regulations. A CCP will be prepared for the Great Dismal Swamp National Wildlife Refuge (NWR) located in Suffolk and Chesapeake, Virginia and Gates and Camden Counties, North Carolina and the Nansemond Refuge Unit located within the City of Suffolk, Virginia. A Wilderness Review of Great Dismal Swamp NWR will also be completed concurrently in accordance with the Wilderness Act of 1964, as amended and Refuge Planning policy 602 FW Chapters 1, 2, and 3. The Service is furnishing this notice in compliance with the National Wildlife Refuge System Administration Act of 1966, as amended (16 U.S.C. 668dd *et seq.*): (1) To advise other agencies and the public of our intentions, and (2) to obtain suggestions and information on the scope of issues to include in the EIS. Times and dates for public scoping meetings are identified below and will remain the same as those published in the previous notice.

DATES: Please submit comments on the Draft CCP and EIS on or before March 1, 2002.

ADDRESSES: Please submit comments on the Draft CCP and EIS to Refuge Manager, Great Dismal Swamp National Wildlife Refuge, PO Box 349, Suffolk, VA 23439–0349.

FOR MORE INFORMATION CONTACT: Refuge Manager, Great Dismal Swamp National Wildlife Refuge, PO Box 349, Suffolk, VA 23439–0349 at 757–986–3706.

SUPPLEMENTARY INFORMATION: By Federal law, all lands within the National Wildlife Refuge System are to be managed in accordance with an approved CCP. The CCP guides management decisions and identifies refuge goals, long-range objectives, and strategies for achieving refuges' purposes. The planning process will consider many elements including habitat and wildlife management, habitat protection and acquisition, public uses, and cultural resources. Public input into this planning process is essential. The CCP will provide other agencies and the public with a clear understanding of the desired conditions for the refuges and how the Service will impact management strategies. The Service will solicit public input via open houses, public meetings, workshops, and written comments. Special mailings, newspaper articles, and announcements will inform people of the time and place of such opportunities for public input to the CCP. The Great Dismal Swamp NWR encompasses some 109,000 acres of marshes, wooded wetlands/swamps, and open water. Comments on the protection of threatened and endangered species and migratory birds and the protection and management of their habitat will be solicited as part of the planning process. A Draft CCP and Draft EIS are planned for public review by December 2002. Review of the project will be conducted in accordance with the requirements of NEPA, as amended (42 U.S.C. 4321 *et seq.*), NEPA Regulations (40 CFR parts 1500–1508), other appropriate Federal laws and regulations, and Service policies and procedures for compliance with those regulations.

Dated: December 6, 2001.

Richard O. Bennett,

Acting Regional Director, U.S. Fish and Wildlife Service, Hadley, Massachusetts.

[FR Doc. 02–2088 Filed 1–31–02; 8:45 am]

BILLING CODE 4310–55–P

DEPARTMENT OF THE INTERIOR

Fish and Wildlife Service

Meeting of the Klamath River Basin Fisheries Task Force

AGENCY: Fish and Wildlife Service, Interior.

ACTION: Notice of meeting.

SUMMARY: Pursuant to section 10(a)(2) of the Federal Advisory Committee Act (5 U.S.C. App. I), this notice announces a meeting of the Klamath River Basin Fisheries Task Force, established under the authority of the Klamath River Basin Fishery Resources Restoration Act (16 U.S.C. 460ss *et seq.*). The meeting is open to the public. The purpose of the meeting is to continue providing recommendations from the affected interests to the Department of the Interior on implementation of their program to restore anadromous fisheries, including salmon and steelhead, of the Klamath River in California and Oregon.

DATES: The Klamath River Basin Fisheries Task Force (Task Force) will meet from 9 a.m. to 5 p.m. on February 6, 2002, and from 8 a.m. to 5 p.m. on February 7, 2002.

ADDRESSES: The meeting will be held at the Ship Ashore Resort, 12370 Highway 101 North, Smith River, CA.

FOR FURTHER INFORMATION CONTACT: Phil Detrich, Project Leader, U.S. Fish and Wildlife Service, 1829 South Oregon Street, Yreka, California 96097, telephone (530) 842–5763.

SUPPLEMENTARY INFORMATION: For background information on the Task Force, please refer to the notice of their initial meeting that appeared in the **Federal Register** on July 8, 1987 (52 FR 25639).

Dated: January 25, 2002.

Miel R. Corbett,

Acting California/Nevada Operations Manager, California/Nevada Office, Fish and Wildlife Service.

[FR Doc. 02–2457 Filed 1–31–02; 8:45 am]

BILLING CODE 4310–55–P

DEPARTMENT OF THE INTERIOR

National Park Service

Acadia National Park, Bar Harbor, ME; Acadia National Park Advisory Commission; Notice of Meeting

Notice is hereby given in accordance with the Federal Advisory Committee Act (Public Law 92–463, 86 Stat. 770, 5 U.S.C. App. 1, Sec. 10), that the Acadia National Park Advisory Commission will hold a meeting on Monday, February 4, 2002.

The Commission was established pursuant to Public Law 99–420, Sec. 103. The purpose of the commission is to consult with the Secretary of the Interior, of his designee, on matters relating to the management and development of the park, including but not limited to the acquisition of lands and interests in lands (including conservation easements on islands) and termination of rights of use and occupancy.

The meeting will convene at park Headquarters, McFarland Hill, Bar Harbor, Maine, at 1 P.M. to consider the following agenda:

1. Review and approval of minutes from the meeting held September 10, 2001
2. Committee reports:
—Land Conservation
   A. Proposed Milliken conservation easement, Long Cove, Indian Point, Bar Harbor
   B. Proposed Rhoads conservation easement, Birch Island, Vinalhaven
—Park Use
—Science
3. Old business
4. Superintendent's report
5. Public comments
6. Proposed agenda for next Commission meeting, June 3, 2002

The meeting is open to the public. Interested persons may make oral/written presentations to the Commission or file written statements. Such requests should be made to the Superintendent at least seven days prior to the meeting.

Further information concerning this meeting may be obtained from the Superintendent, Acadia National Park, P.O. Box 177, Bar Harbor, Maine 04609, tel: (207) 288–3338.

Dated: January 11, 2001.

Len Bobinchock,

Acting Superintendent, Acadia National Park.

[FR Doc. 02–2483 Filed 1–31–02; 8:45 am]

BILLING CODE 4310–70–M

INTERNATIONAL TRADE COMMISSION

[Investigations Nos. 701–TA–416 (Final) and 731–TA–948 (Final)]

Individually Quick Frozen Red Raspberries From Chile

AGENCY: United States International Trade Commission.

ACTION: Scheduling of the final phase of countervailing duty and antidumping investigations.

SUMMARY: The Commission hereby gives notice of the scheduling of the final phase of countervailing duty investigation No. 701–TA–416 (Final) under section 705(b) of the Tariff Act of 1930 (19 U.S.C. 1671d(b)) (the Act) and the final phase of antidumping investigation No. 731–TA–948 (Final) under section 735(b) of the Act (19 U.S.C. 1673d(b)) to determine whether an industry in the United States is materially injured or threatened with material injury, or the establishment of an industry in the United States is materially retarded, by reason of subsidized and less-than-fair-value imports from Chile of individually quick frozen (''IQF'') red raspberries, provided for in subheading 0811.20.20 of the Harmonized Tariff Schedule of the United States.[1]

For further information concerning the conduct of this phase of the investigations, hearing procedures, and rules of general application, consult the Commission's Rules of Practice and Procedure, part 201, subparts A through E (19 CFR part 201), and part 207, subparts A and C (19 CFR part 207).

EFFECTIVE DATE: December 31, 2001.

FOR FURTHER INFORMATION CONTACT: Fred Ruggles (202–205–3187), Office of Investigations, U.S. International Trade Commission, 500 E Street SW, Washington, DC 20436. Hearing-impaired persons can obtain information on this matter by contacting the Commission's TDD terminal on 202–205–1810. Persons with mobility impairments who will need special assistance in gaining access to the Commission should contact the Office of the Secretary at 202–205–2000. General information concerning the Commission may also be obtained by accessing its internet server, *http://www.usitc.gov.* The public record for this investigation may be viewed on the Commission's electronic docket (EDIS–ON–LINE) at *http://dockets.usitc.gov/eol/public.*

SUPPLEMENTARY INFORMATION:

Background

The final phase of these investigations is being scheduled as a result of an affirmative preliminary determination by the Department of Commerce that such products are being sold in the

[1] For purposes of these investigations, the Department of Commerce has defined the subject merchandise as individually quick frozen whole or broken red raspberries from Chile, with or without the addition of sugar or syrup, regardless of variety, grade, size, or horticulture method (*e.g.,* organic or not), the size of the container in which packed, or the method of packing. Excluded from the imported products subject to these investigations are fresh red raspberries and block frozen red raspberries (*i.e.,* puree, straight pack, juice stock, and juice concentrate).

United States at less than fair value within the meaning of section 733 of the Act (19 U.S.C. 1673b). (Commerce made a negative preliminary determination concerning whether certain benefits which constitute subsidies within the meaning of section 703 of the Act (19 U.S.C. 1671b) are being provided to manufacturers, producers, or exporters in Chile of IQF red raspberries.) The investigations were requested in a petition filed on May 31, 2001, by the IQF Red Raspberry Fair Trade Committee, Washington, DC.

Participation in the Investigations and Public Service List

Persons, including industrial users of the subject merchandise and, if the merchandise is sold at the retail level, representative consumer organizations, wishing to participate in the final phase of these investigations as parties must file an entry of appearance with the Secretary to the Commission, as provided in § 201.11 of the Commission's rules, no later than 21 days prior to the hearing date specified in this notice. A party that filed a notice of appearance during the preliminary phase of the investigations need not file an additional notice of appearance during this final phase. The Secretary will maintain a public service list containing the names and addresses of all persons, or their representatives, who are parties to the investigations.

Limited Disclosure of Business Proprietary Information (BPI) Under an Administrative Protective Order (APO) and BPI Service List

Pursuant to § 207.7(a) of the Commission's rules, the Secretary will make BPI gathered in the final phase of these investigations available to authorized applicants under the APO issued in the investigations, provided that the application is made no later than 21 days prior to the hearing date specified in this notice. Authorized applicants must represent interested parties, as defined by 19 U.S.C. 1677(9), who are parties to the investigations. A party granted access to BPI in the preliminary phase of the investigations need not reapply for such access. A separate service list will be maintained by the Secretary for those parties authorized to receive BPI under the APO.

Staff Report

The prehearing staff report in the final phase of these investigations will be placed in the nonpublic record on May 9, 2002, and a public version will be issued thereafter, pursuant to § 207.22 of the Commission's rules.

Hearing

The Commission will hold a hearing in connection with the final phase of these investigations beginning at 9:30 a.m. on May 23, 2002, at the U.S. International Trade Commission Building. Requests to appear at the hearing should be filed in writing with the Secretary to the Commission on or before May 13, 2002. A nonparty who has testimony that may aid the Commission's deliberations may request permission to present a short statement at the hearing. All parties and nonparties desiring to appear at the hearing and make oral presentations should attend a prehearing conference to be held at 9:30 a.m. on May 15, 2002, at the U.S. International Trade Commission Building. Oral testimony and written materials to be submitted at the public hearing are governed by §§ 201.6(b)(2), 201.13(f), and 207.24 of the Commission's rules. Parties must submit any request to present a portion of their hearing testimony *in camera* no later than 7 days prior to the date of the hearing.

Written Submissions

Each party who is an interested party shall submit a prehearing brief to the Commission. Prehearing briefs must conform with the provisions of § 207.23 of the Commission's rules; the deadline for filing is May 16, 2002. Parties may also file written testimony in connection with their presentation at the hearing, as provided in § 207.24 of the Commission's rules, and posthearing briefs, which must conform with the provisions of § 207.25 of the Commission's rules. The deadline for filing posthearing briefs is May 31, 2002; witness testimony must be filed no later than three days before the hearing. In addition, any person who has not entered an appearance as a party to the investigations may submit a written statement of information pertinent to the subject of the investigations on or before May 31, 2002. On June 13, 2002, the Commission will make available to parties all information on which they have not had an opportunity to comment. Parties may submit final comments on this information on or before June 17, 2002, but such final comments must not contain new factual information and must otherwise comply with § 207.30 of the Commission's rules. All written submissions must conform with the provisions of § 201.8 of the Commission's rules; any submissions that contain BPI must also conform with the requirements of §§ 201.6, 207.3, and 207.7 of the Commission's rules. The Commission's rules do not authorize filing of submissions with the Secretary by facsimile or electronic means.

In accordance with §§ 201.16(c) and 207.3 of the Commission's rules, each document filed by a party to the investigations must be served on all other parties to the investigations (as identified by either the public or BPI service list), and a certificate of service must be timely filed. The Secretary will not accept a document for filing without a certificate of service.

Authority: These investigations are being conducted under authority of title VII of the Tariff Act of 1930; this notice is published pursuant to § 207.21 of the Commission's rules.

By order of the Commission.

Issued: January 28, 2002.

Marilyn R. Abbott,

Acting Secretary.

[FR Doc. 02–2461 Filed 1–31–02; 8:45 am]

BILLING CODE 7020–02–P

INTERNATIONAL TRADE COMMISSION

[Investigations Nos. 701–TA–415 (Final) and 731–TA–933–9341 (Final)]

Polyethylene Terephthalate Film, Sheet, and Strip From India and Taiwan

AGENCY: United States International Trade Commission.

ACTION: Scheduling of the final phase of countervailing duty and antidumping investigations.

SUMMARY: The Commission hereby gives notice of the scheduling of the final phase of countervailing duty investigation No. 701–TA–415 (Final) under § 705(b) of the Tariff Act of 1930 (19 U.S.C. 1671d(b)) (the Act) and the final phase of antidumping investigations Nos. 731–TA–933–934 (Final) under § 735(b) of the Act (19 U.S.C. 1673d(b)) to determine whether an industry in the United States is materially injured or threatened with material injury, or the establishment of an industry in the United States is materially retarded, by reason of subsidized and imports from India, and less-than-fair-value imports from India and Taiwan, of polyethylene terephthalate film, sheet, and strip (PET film), provided for in subheading 3920.62.00 of the Harmonized Tariff Schedule of the United States.[1]

[1] For purposes of these investigations, the Department of Commerce has defined the subject merchandise as all guages of raw, pretreated, or primed PET film, whether extruded or coextruded.

Continued

For further information concerning the conduct of this phase of the investigations, hearing procedures, and rules of general application, consult the Commission's rules of practice and procedure, part 201, subparts A through E (19 CFR part 201), and part 207, subparts A and C (19 CFR part 207).

EFFECTIVE DATE: December 21, 2001.

FOR FURTHER INFORMATION CONTACT: Valerie Newkirk (202–205–3190), Office of Investigations, U.S. International Trade Commission, 500 E Street SW., Washington, DC 20436. Hearing-impaired persons can obtain information on this matter by contacting the Commission's TDD terminal on 202–205–1810. Persons with mobility impairments who will need special assistance in gaining access to the Commission should contact the Office of the Secretary at 202–205–2000. General information concerning the Commission may also be obtained by accessing its Internet server (*http://www.usitc.gov.)* The public record for these investigations may be viewed on the Commission's electronic docket (EDIS–ON–LINE) at *http://dockets.usitc.gov/eol/public.*

SUPPLEMENTARY INFORMATION:

Background

The final phase of these investigations is being scheduled as a result of affirmative preliminary determinations by the Department of Commerce that certain benefits which constitute subsidities within the meaning of § 703 of the Act (19 U.S.C. 1671b) are being provided to manufacturers, producers, or exporters in India of PET film, and that such products from India and Taiwan are being sold in the United States at less than fair value within the meaning of § 733 of the Act (19 U.S.C. 1673b). The investigations were requested in a petition filed on May 17, 2001, by DuPont Teijin Films, Wilmington, DE, Mitsubishi Polyester Film of America, Greer, SC, and Toray Plastics (America), Inc., North Kensington, RI.

Participation in the Investigations and Public Service List

Persons, including industrial users of the subject merchandise and, if the merchandise is sold at the retail level, representative consumer organizations, wishing to participate in the final phase of these investigations as parties must file an entry of appearance with the Secretary to the Commission, as provided in § 201.11 of the Commission's rules, no later than 21 days prior to the hearing date specified in this notice. A party that filed a notice of appearance during the preliminary phase of the investigations need not file an additional notice of appearance during this final phase. The Secretary will maintain a public service list containing the names and addresses of all persons, or their representatives, who are parties to the investigations.

Limited Disclosure of Business Proprietary Information (BPI) Under an Administrative Protective Order (APO) and BPI Service List

Pursuant to § 207.7(a) of the Commission's rules, the Secretary will make BPI gathered in the final phase of these investigations available to authorized applicants under the APO issued in the investigations, provided that the application is made no later than 21 days prior to the hearing date specified in this notice. Authorized applicants must represent interested parties, as defined by 19 U.S.C. 1677(9), who are parties to the investigations. A party granted access to BPI in the preliminary phase of the investigations need not reapply for such access. A separate service list will be maintained by the Secretary for those parties authorized to receive BPI under the APO.

Staff Report

The prehearing staff report in the final phase of these investigations will be placed in the nonpublic record on April 25, 2002, and a public version will be issued thereafter, pursuant to § 207.22 of the Commission's rules.

Hearing

The Commission will hold a hearing in connection with the final phase of these investigations beginning at 9:30 a.m. on May 9, 2002, at the U.S. International Trade Commission Building. Requests to appear at the hearing should be filed in writing with the Secretary to the Commission on or before May 2, 2002. A nonparty who has testimony that may aid the Commission's deliberations may request permission to present a short statement at the hearing. All parties and nonparties desiring to appear at the hearing and make oral presentations should attend a prehearing conference to be held at 9:30 a.m. on May 6, 2002, at the U.S. International Trade Commission Building. Oral testimony and written materials to be submitted at the public hearing are governed by §§ 201.6(b)(2), 201.13(f), and 207.24 of the Commission's rules. Parties must submit any request to present a portion of their hearing testimony *in camera* no later than 7 days prior to the date of the hearing.

Written Submissions

Each party who is an interested party shall submit a prehearing brief to the Commission. Prehearing briefs must conform with the provisions of § 207.23 of the Commission's rules; the deadline for filing is May 2, 2002. Parties may also file written testimony in connection with their presentation at the hearing, as provided in § 207.24 of the Commission's rules, and posthearing briefs, which must conform with the provisions of § 207.25 of the Commission's rules. The deadline for filing posthearing briefs is May 16, 2002; witness testimony must be filed no later than three days before the hearing. In addition, any person who has not entered an appearance as a party to the investigations may submit a written statement of information pertinent to the subject of the investigations on or before May 16, 2002. On June 3, 2002, the Commission will make available to parties all information on which they have not had an opportunity to comment. Parties may submit final comments on this information on or before June 5, 2002, but such final comments must not contain new factual information and must otherwise comply with § 207.30 of the Commission's rules. All written submissions must conform with the provisions of § 201.8 of the Commission's rules; any submissions that contain BPI must also conform with the requirements of §§ 201.6, 207.3, and 207.7 of the Commission's rules. The Commission's rules do not authorize filing of submissions with the Secretary by facsimile or electronic means.

In accordance with §§ 201.16(c) and 207.3 of the Commission's rules, each document filed by a party to the investigations must be served on all other parties to the investigations (as identified by either the public or BPI service list), and a certificate of service must be timely filed. The Secretary will not accept a document for filing without a certificate of service.

Authority: These investigations are being conducted under authority of title VII of the Tariff Act of 1930; this notice is published pursuant to § 207.21 of the Commission's rules.

Issued: January 28, 2002.

The scope excludes metallized films and other finished films that have had at least one of their surfaces modified by the application of a performance-enhancing resinous or inorganic layer of more than 0.00001 inch thick.

By order of the Commission.

Marilyn R. Abbott,

Acting Secretary.

[FR Doc. 02–2460 Filed 1–31–02; 8:45 am]

BILLING CODE 7020–02–P

DEPARTMENT OF JUSTICE

Immigration and Naturalization Service

[INS No. 2114–01; AG Order No. 2555–2002]

RIN 1115–AE26

Extension of the Designation of Angola Under Temporary Protected Status Program

AGENCY: Immigration and Naturalization Service, Justice.

ACTION: Notice.

SUMMARY: The designation of Angola under the Temporary Protected Status (TPS) Program will expire on March 29, 2002. This notice extends the Attorney General's designation of Angola for 12 months until March 29, 2003, and sets forth procedures necessary for nationals of Angola (or aliens having no nationality who last habitually resided in Angola) with TPS to re-register for the additional 12-month period. Registration is limited to persons who both registered under the initial designation (which ended on March 29, 2001) and also timely re-registered under the extension of designation, or registered under the redesignation (which ends March 29, 2002). Nationals of Angola (or aliens having no nationality who last habitually resided in Angola) who previously have not applied for TPS may be eligible to apply under the late initial registration provisions.

EFFECTIVE DATES: The extension of Angola's TPS designation is effective March 29, 2002, and will remain in effect until March 29, 2003. The 60-day re-registration period begins February 1, 2002 and will remain in effect until April 2, 2002.

FOR FURTHER INFORMATION CONTACT: Emily Crowder, Program Analyst, Immigration and Naturalization Service, 425 I Street, NW, Room 3040, Washington, DC 20536, telephone (202) 514–4754.

SUPPLEMENTARY INFORMATION:

What Authority Does the Attorney General Have To Extend the Designation of Angola Under the TPS Program?

Section 244(b)(3)(A) of the Immigration and Nationally Act (the Act) states that at least 60 days before the end of a designation, or any extension thereof, the Attorney General must review conditions in the foreign state for which he designation is in effect. 8 U.S.C. 1254a(b)(3)(A). If the Attorney General does not determine that the foreign state no longer continues to meet the conditions for designation, the period of designation is extended automatically for 6 months pursuant to section 244(b)(3)(C) of the Act, although the Attorney General may exercise his discretion to extend the designation for a period of 12 or 18 months. 8 U.S.C. 1254a(b)(3)(C). With respect to Angola, such an extension makes TPS available only to persons who have been continuously physically present since April 5, 2001, and have continuously resided in the United States since the effective date of the redesignation, April 5, 2001.

Why Did the Attorney General Decide To Extend the TPS Designation for Angola?

On March 29, 2000, the Attorney General designated Angola under the TPS program (65 FR 16634). Since that time, the Departments of Justice and State have continuously reviewed conditions in Angola, extending and re-designating Angola under the TPS program on April 5, 2001 (66 FR 18111). The current review has resulted in a consensus that a further 12-month extension is warranted. A recent Department of State report found that the conditions under which Angola was designated for TPS have not ceased to exist and, therefore, ''[t]he situation in Angola remains unsafe for return.'' Recommendation for Extension Of TPS, INS/DOS Consultation for Angola (November 1, 2001). The Department of Justice reports that ''[g]uerilla activities of UNITA have spread in recent months and both sides to the conflict have subjected civilians to a wide range of human rights abuses.'' The INS Resource Information Center, Angola: Information on Civil Conflict and the Socioeconomic and Humanitarian Situation (December 1, 2001). Such ongoing, armed conflict continues to threaten seriously the personal safety of Angolans, and the Department of State estimates that the fighting between UNTIA rebels and the Angolan Government will continue well into next year. Recommendation for Extension of TPS, INS/DOS Consultation for Angola. ''The warring parties have repeatedly subjected the civilian population to forced displacements and acts of violence,'' including murder and rape. *Id.* Approximately 3 million Angolans remain internally displaced, 380,000 of whom have been displaced since January 2001. *Id.* Additionally, UNITA rebels have begun ''using terrorist tactics to attack civilians even in government-controlled areas.'' *Id.* The armed conflict also continues to effect health conditions in Angola. The Department of State's report cities that ''[i]n overcrowded cities and makeshift IDP camps, malnutrition and vitamin deficiency-induced illnesses flourish, while poor water and sanitation conditions create an environment of increased risk of disease and epidemics such as polio and meningitis.'' *Id.* Also, the Department of State estimates that there are approximately 8 million landmines planted in Angolan soil, making it such that ''[r]eturnees would be at risk of becoming casualties.'' *Id.*

Based on this review, the Attorney General finds that the conditions that prompted designation of Angola under the TPS program continue to be met. 8 U.S.C. 1254a(b)(3)(A). There is an ongoing armed conflict within Angola and, due to such conflict, requiring the return of aliens who are nationals of Angola (or aliens having no nationality who last habitually resided in Angola) would pose a serious threat to their personal safety. 8 U.S.C. 1254a(b)(1)(A). Furthermore, there exist extraordinary and temporary conditions in Angola that prevent nationals of Angola (and aliens having no nationality who last habitually resided in Angola) from returning home in safety. 8 U.S.C. 1254a(b)(1)(C). Finally, permitting nationals of Angola to remain temporarily in the United States is not contrary to the national interest of the United States. *Id.* On the basis of these findings, the Attorney General concludes that the TPS designation for Angola should be extended for an additional 12-month period. 8 U.S.C. 1254a(b)(3)(C).

If I Currently Have TPS Through the Angola TPS Program, Do I Still Re-Register for TPS?

Yes. If you have already been granted TPS through the Angola TPS program, your status will expire on March 29, 2002. Accordingly, you must re-register for TPS in order to maintain your status through March 29, 2003. See the re-registration instructions below.

If I Am Currently Registered for TPS, How Do I Re-Register for an Extension?

All persons previously granted TPS under the Angola program who wish to maintain such status must apply for an extension by filing (1) a Form I–821, Application for Temporary Protected Status, without the $50 filing fee; (2) a Form I–765, Application for

Employment Authorization; and (3) two identification photographs (1½ inches x 1½ inches). See the chart below to determine whether you must submit the one hundred and twenty dollar ($120) filing fee with Form I–765. Applicants for an extension of TPS benefits do not need to be re-fingerprinted and thus need not pay the $50 fingerprint fee, Children beneficiaries of TPS who have reached the age of fourteen (14) but were not previously fingerprinted must pay the fifty dollar ($50) fingerprint fee with the application for extension.

Submit the completed forms and applicable fee, if any, to the Immigration and Naturalization Service (''Service'') district office having jurisdiction over your place of residence during the 60-day re-registration period that beings February 1, 2002 and April 2, 2002 (inclusive of such end date).

If	Then
You are applying for employment authorization until March 29, 2003.	You must complete and file the Form I–765, Application for Employment Authorization, with the $120 fee.
You already have employment authorization or do not require employment authorization.	You must complete and file Form I–765 with no fee.
You are applying for employment authorization and are requesting a fee waiver.	You must complete and file: (1) Form I–765 and (2) a fee waiver request and affidavit (and any other information) in accordance with 8 CFR 244.20.

Where Must I Ffile?

Submit the completed forms, applicable fees, and identification photographs to the Service district office having jurisdiction over your place of residence.

When Must I File?

You must file your application and accompanying materials within the 60-day reregistration period that begins February 1, 2002 and ends April 2, 2002 (inclusive of such end date).

How Does an Application for TPS Affect My Application for Asylum or Other Immigration Benefits?

An application for TPS does not affect an application for asylum or any other immigration benefit. A national of Angola (or alien having no nationality who last habitually resided in Angola) who is otherwise eligible for TPS and has applied for, or plans to apply for, asylum, but who has not yet been granted asylum or withholding of removal, may also apply for TPS. Denial of an application for asylum or any other immigration benefit does not affect an applicant's ability to apply for TPS, although the grounds for denying one form of relief may also be grounds for denying TPS. For example, a person who has been convicted of a particularly serious crime is not eligible for asylum or TPS. 8 U.S.C. 1158(b)(2); 8 U.S.C. 1254a(c)(2)(B)(i).

Does This Extension Allow Nationals of Angola (or Aliens Having No Nationality Who Last Habitually Resided in Angola) Who Entered the United States After April 5, 2001, To File for TPS?

No. This is a notice of an extension of the TPS designation for Angola, not a notice of redesignation of Angola under the TPS program. An extension of TPS does not change the required dates of continuous residence and continuous physical presence in the United States, in this case, April 5, 2001. This extension does not expand TPS availability to include nationals of Angola (or aliens having no nationality who last habitually resided in Angola) who have not been continuously physically present in, and have not continuously resided in, the United States since the date of the most recent redesignation, April 5, 2001.

Is Late Initial Registration Possible?

Yes. Some persons may be eligible for late initial registration under 8 CFR 244.2. To apply for late initial registration an applicant must:

(1) Be a national of Angola (or alien who has no nationality and who last habitually resided in Angola);

(2) Have been continuously physically present in the United States since April 5, 2001;

(3) Have continuously resided in the United States since April 5, 2001; and

(4) Be both admissible as an immigrant, except as provided under section 244(c)(2)(A) of the Act, and not ineligible under section 244(c)(2)(B) of the Act.

Additionally, the applicant must be able to demonstrate that during the registration period from April 5, 2001, through March 29, 2002, he or she:

(1) Was a nonimmigrant or had been granted voluntary departure status or any relief from removal;

(2) Had an application for change of status, adjustment of status, asylum, voluntary departure, or any relief from removal or change of status pending or subject to further review or appeal;

(3) Was a parolee or had a pending request for reparole; or

(4) Was the spouse or child of an alien currently eligible to be a TPS registrant. 8 CFR 244.2(f)(2).

An applicant for late initial registration must file an application for late registration within a 60-day period immediately following the expiration or termination of the conditions described above. 8 CFR 244.2(g).

Notice of Extension of Designation of Angola Under the TPS Program

By the authority vested in me as Attorney General under sections 244(b)(1), (b)(3)(A), and (b)(3)(C) of the Act, I have consulted with the appropriate government agencies and determine that the conditions that prompted designation of Angola for TPS continue to be met. 8 U.S.C. 1254a(b)(3)(A). Accordingly, I order as follows:

(1) The designation of Angola under section 244(b) of the Act is extended for an additional 12-month period from March 29, 2002, to March 29, 2003. 8 U.S.C. 1254a(b)(3)(C).

(2) There are approximately 1,000 nationals of Angola (or aliens having no nationality who last habitually resided in Angola) who have been granted TPS and who are eligible for re-registration.

(3) To maintain TPS, a national of Angola (or an alien having no nationality who last habitually resided in Angola) who received TPS during the initial designation or redesignation periods must re-register for TPS during the 60-day re-registration period from February 1, 2002 until April 2, 2002.

(4) To re-register, the applicant must file the following: (1) Form I–821, Application for Temporary Protected Status; (2) Form I–765, Application for Employment Authorization; and (3) two identification photographs (1½ inches by 1½ inches). There is no fee for a Form I–821 filed as part of the re-registration application. If the applicant requests employment authorization, he or she must submit one hundred and twenty dollars ($120) or a properly documented fee waiver request, pursuant to 8 CFR 244.20, with the Form I–765. An applicant who does not request employment authorization must nonetheless file Form I–765 along with Form I–821, but is not required to submit the fee. The fifty dollar ($50) fingerprint fee is required only for children beneficiaries of TPS who have reached the age of 14 but were not previously fingerprinted. Failure to re-register without good cause will result in the withdrawal of TPS. 8 CFR 244.17(c). Some persons who had not previously applied for TPS may be eligible for late initial registration under 8 CFR 244.2.

(5) At least 60 days before this extension terminates on March 29, 2003, the Attorney General will review the designation of Angola under the TPS program and determine whether the conditions for designation continue to be met. 8 U.S.C. 1254a(b)(3)(A). Notice of that determination, including the basis for the determination, will be published in the **Federal Register**. 8 U.S.C. 1254a(b)(3)(A).

(6) Information concerning the extension of designation of Angola under the TPS program will be available at local Service offices upon publication of this notice and on the Service Web site at *http://www.ins.usdoj.gov.*

Dated: January 28, 2002.

John Ashcroft,

Attorney General.

[FR Doc. 02–2528 Filed 1–31–02; 8:45 am]

BILLING CODE 4410–10–M

DEPARTMENT OF LABOR

Employment Standards Administration

Proposed Collection; Comment Request; Correction

ACTION: Correction.

SUMMARY: In **Federal Register** Volume 66, Number 244, beginning on page 65513 in the issue of Wednesday, December 19, 2001, under Current Actions, under Type of Review, make the following correction: On page 65514, Type of Review was previously listed as Extension. This should be changed to Type of Review: Revision.

Dated: January 29, 2002.

Patricia Vastano,

Deputy Director, Office of Management, Administration and Planning, Employment Standards Administration.

[FR Doc. 02–2496 Filed 1–31–02; 8:45 am]

BILLING CODE 4510–CM–M

DEPARTMENT OF LABOR

Employment Standards Administration; Wage and Hour Division

Minimum Wages for Federal and Federally Assisted Construction; General Wage Determination Decisions

General wage determination decisions of the Secretary of Labor are issued in accordance with applicable law and are based on the information obtained by the Department of Labor from its study of local wage conditions and data made available from other sources. They specify the basic hourly wage rates and fringe benefits which are determined to be prevailing for the described classes of laborers and mechanics employed on constructed projects of a similar character and in the localities specified therein.

The determinations in these decisions of prevailing rates and fringe benefits have been made in accordance with 29 CFR part 1, by authority of the Secretary of Labor pursuant to the provisions of the Davis-Bacon Act of March 3, 1931, as amended (46 Stat. 1494, as amended, 40 U.S.C. 276a) and of other Federal statutes referred to in 29 CFR part 1, Appendix, as well as such additional statutes as may from time to time be enacted containing provisions for the payment of wages determined to be prevailing by the Secretary of Labor in accordance with the Davis-Bacon Act. The prevailing rates and fringe benefits determined in these decisions shall, in accordance with the provisions of the foregoing statutes, constitute the minimum wages payable on Federal and federally assisted construction projects to laborers and mechanics of the specified classes engaged on contract work of the character and in the localities described therein.

Good cause is hereby found for not utilizing notice and public comment procedure thereon prior to the issuance of these determinations as prescribed in 5 U.S.C. 553 and not providing for delay in the effective date as prescribed in that section, because the necessity to issue current construction industry wage determinations frequently and in large volume causes procedures to be impractical and contrary to the public interest.

General wage determination decisions, and modifications and supersedes decisions thereto, contain no expiration dates and are effective from their date of notice in the **Federal Register**, or on the date written notice is received by the agency, whichever is earlier. These decisions are to be used in accordance with the provisions of 29 CFR Parts 1 and 5. Accordingly, the applicable decision, together with any modifications issued, must be made a part of every contract for performance of the described work within the geographic area indicated as required by an applicable Federal prevailing wage law and 29 CFR part 5. The wage rates and fringe benefits, notice of which is published herein, and which are contained in the Government Printing Office (GPO) document entitled ''General Wage Determinations Issued Under the Davis-Bacon and Related Acts,'' shall be the minimum paid by contractors and subcontractors to laborers and mechanics.

Any person, organization, or governmental agency having an interest in the rates determined as prevailing is encouraged to submit wage rate and fringe benefit information for consideration by the Department.

Further information and self-explanatory forms for the purpose of submitting this data may be obtained by writing to the U.S. Department of Labor, Employment Standards Administration, Wage and Hour Division, Division of Wage Determinations, 200 Constitution Avenue, NW., Room S–3014, Washington, DC 20210.

Modification to General Wage Determination Decisions

The number of the decisions listed to the Government Printing Office document entitled ''General Wage Determinations Issued Under the Davis-Bacon and Related Acts'' being modified as listed by Volume and State. Dates of publication in the **Federal Register** are in parentheses following the decisions being modified.

Volume I:

None

Volume II:

None

Volume III:

None

Volume IV:

None

Volume V:

None

Volume VI:

None

Volume VII:

None

General Wage Determination Publication

General wage Determinations issued under the Davis-Bacon and related Acts, including those noted above, may be found in the Government Printing Office (GPO) document entitled ''General Wage Determinations Issued Under the Davis-Bacon And Related Acts''. This publication is available at each of the 50 Regional Government Depository Libraries and many of the 1,400 Government Depository Libraries across the country.

General Wage determinations issued under the Davis-Bacon and related Acts are available electronically at no cost on the Government Printing Office site at *www.access.gpo.gov/davisbacon.* They are also available electronically by subscription to the Davis-Bacon Online

Service (*http://davisbacon.fedworld.gov)of* the National Technical Information Service (NTIS) of the U.S. Department of Commerce at 1–800–363–2068. This subscription offers value-added features such as electronic delivery of modified wage decisions directly to the user's desktop, the ability to access prior wage decisions issued during the year, extensive Help desk Support, etc.

Hard-copy subscriptions may be purchased from: Superintendent of Documents, U.S. Government Printing Office, Washington, DC 20402, (202) 512–1800.

When ordering hard-copy subscription(s), be sure to specify the State(s) of interest, since subscriptions may be ordered for any or all of the six separate Volumes, arranged by State. Subscriptions include an annual edition (issued in January or February) which includes all current general wage determinations for the States covered by each volume. Throughout the remainder of the year, regular weekly updates will be distributed to subscribers.

Signed at Washington, DC, this 24 day of January 2002.

Carl J. Poleskey,

Chief, Branch, of Construction Wage Determinations.

[FR Doc. 02–2225 Filed 1–31–02; 8:45 am]

BILLING CODE 4510–27–M

LIBRARY OF CONGRESS

Copyright Office

[Docket No. 2002–2 CARP]

Copyright Arbitration Royalty Panels; List of Arbitrators

AGENCY: Copyright Office, Library of Congress.

ACTION: Publication of the 2002–2003 CARP arbitrator list.

SUMMARY: The Copyright Office is publishing the list of arbitrators eligible for service on a Copyright Arbitration Royalty Panel (''CARP'') during 2002 and 2003. This list will be used to select the arbitrators who will serve on panels initiated in 2002 and 2003 for determining the distribution of royalty fees or the adjustment of royalty rates.

EFFECTIVE DATE: February 1, 2002.

FOR FURTHER INFORMATION CONTACT: David O. Carson, General Counsel, or Tanya M. Sandros, Attorney-Advisor, Copyright Arbitration Royalty Panel, P.O. Box 70977, Southwest Station, Washington, DC 20024. Telephone: (202) 707–8380. Telefax: (202) 252–3423.

SUPPLEMENTARY INFORMATION:

Background

For royalty rate adjustments and distributions that are in controversy, the Copyright Act requires the selection of a Copyright Arbitration Royalty Panel (''CARP'') consisting of three arbitrators from ''lists provided by professional arbitration associations.'' *See* 17 U.S.C. 802(b). The Librarian of Congress selects two of the arbitrators for a CARP from a list of nominated arbitrators; those selected then choose a third arbitrator to serve as chairperson of the panel. If the two arbitrators cannot agree, the Librarian is instructed to select the third arbitrator.

On December 7, 1994, the Copyright Office issued final regulations implementing the CARP selection process. 59 FR 63025 (December 7, 1994). Subsequently, these rules were amended to provide for the generation of a new list of nominees biennially. 61 FR 63715 (December 2, 1996). Section 251.3(a) of the regulations allows any professional arbitration association or organization to nominate qualified individuals, as described in section 251.5, to serve as arbitrators on a CARP. The regulations require that the submitting arbitration association supply the following information for each person:

(1) The full name, address, and telephone number of the person.

(2) The current position and name of the person's employer, if any, along with a brief summary of the person's employment history, including areas of expertise, and, if available, a description of the general nature of clients represented and the types of proceedings in which the person represented clients.

(3) A brief description of the educational background of the person, including teaching positions and membership in professional associations, if any.

(4) A statement of the facts and information which qualify the person to serve as an arbitrator under section 251.5.

(5) A description or schedule detailing fees proposed to be charged by the person for service on a CARP.

(6) Any other information which the professional arbitration association or organization may consider relevant. 37 CFR 251.3(a).

Section 251.3(b) of the regulations requires the Copyright Office to publish a list of qualified persons and mandates that this list must include between 30 and 75 names of persons who were nominated from at least three arbitration associations. The newly comprised list of arbitrators will be in effect until the end of the 2003 calendar year, and any arbitrator selected for a CARP during 2002 and 2003 will come from this list. The list includes the name of the nominee and the nominating association.

The publication of today's list satisfies the requirement of 37 CFR 251.3. The information submitted by the arbitration association with respect to each person listed is available for copying and inspection at the Licensing Division of the Copyright Office. Thus, for example, if the Librarian is required to convene a CARP in 2002 for a royalty fee distribution, parties to that proceeding may review that information as a means of formulating objections to listed arbitrators under section 251.4. The Licensing Division of the Copyright Office is located in the Library of Congress, James Madison Building, LM–458, 101 Independence Avenue, SE., Washington, DC 20540.

Deadline for Filing Financial Disclosure Statement

Section 251.32(a) of the CARP rules provides that, within 45 days of their nomination, each nominee must ''file with the Librarian of Congress a confidential financial disclosure statement as provided by the Library of Congress.'' The Copyright Office sent financial disclosure statements to the nominating associations, with specific instructions for completing and filing the statement, and asked each organization to distribute the forms to its nominees for the CARP arbitrator list. The Librarian of Congress will use the financial disclosure form to determine what financial conflicts of interest, if any, may preclude the nominee from serving as an arbitrator in a CARP proceeding. Unlike information submitted by the arbitration associations under section 251.3(a), the information contained in the financial disclosure statements is confidential and is not available to the public or to the parties to the proceeding. Each nominee has filed a completed financial disclosure form with the Librarian of Congress.

The 2002–2003 CARP Arbitrator List

Howard Adler, *Esq.*—JAMS
The Honorable James M. Bailey—Judicial Dispute Resolution, Inc.
William F. Baron, *Esq.*—American Arbitration Association
The Honorable Tobias G. Barry—Judicial Dispute Resolution, Inc.
Bernard J. Bonn III, *Esq.*—American Arbitration Association
Dorothy K. Campbell, *Esq.*—Intellectual Property Neutrals Association

Terry L. Clark, *Esq.*—American Arbitration Association
Jerry Cohen, *Esq.*—JAMS
John W. Cooley, *Esq.*—Judicial Dispute Resolution, Inc
Mark J. Davis, *Esq.*—American Arbitration Association
The Honorable Gino L. DiVito—Judicial Dispute Resolution, Inc.
Edward Dreyfus, *Esq.*—American Arbitration Association
The Honorable Charles W. Fowler—Arbitration and Mediation Services
Sandra J. Franklin, *Esq.*—National Arbitration Forum
William D. Friend, *Esq.*—American Arbitration Association
The Honorable Michael B. Getty—JAMS
Margery F. Gootnick, *Esq.*—Arbitration and Mediation Services
The Honorable Jerry Grissom—JAMS
The Honorable Jeffrey S. Gulin—Arbitration and Mediation Services
William E. Hartgering, *Esq.*—JAMS
Katherine Hendricks, *Esq.*—American Arbitration Association
Harold Himmelman, *Esq.*—JAMS
The Honorable Louis N. Hurwitz—Arbitration and Mediation Services
Jane Juliano, *Esq.*—JAMS
The Honorable Lewis A. London—Arbitration and Mediation Services
The Honorable Harlan A. Martin—JAMS
The Honorable William F. McDonald—JAMS
Gloria Messinger, *Esq.*—American Arbitration Association
The Honorable James R. Miller, Jr.—JAMS
Cecilia H. Morgan, *Esq.*—JAMS
Cheryl I. Niro, *Esq.*—Judicial Dispute Resolution, Inc.
Timothy T. Patula, *Esq.*—American Arbitration Association
Alex S. Polsky, *Esq.*—JAMS
Richard H. Sayler, *Esq.*—American Arbitration Association
The Honorable Philip E. Schwab—JAMS
Vivien B. Shelanski, *Esq.*—JAMS
The Honorable Judith S. Singleton—Arbitration and Mediation Services
The Honorable James E. Sullivan—JAMS
The Honorable Pamela A. Tynes—JAMS
Eric E. Van Loon, *Esq.*—JAMS
The Honorable Curtis E. von Kann—JAMS
Frank M. Wentworth, Jr., *Esq.*—American Arbitration Association
The Honorable Ronald P. Wertheim—JAMS
The Honorable Michael Wolf—Arbitration and Mediation Services
Michael D. Young, *Esq.*—JAMS
Gregg R. Zegarelli, *Esq.*—American Arbitration Association

Dated: January 29, 2002.

David O. Carson,

General Counsel.

[FR Doc. 02–2519 Filed 1–31–02; 8:45 am]

BILLING CODE 1410–33–P

NATIONAL AERONAUTICS AND SPACE ADMINISTRATION

[Notice (02–014)]

NASA Advisory Council (NAC), Space Science Advisory Committee (SScAC), Astronomical Search for Origins and Planetary Systems Subcommittee (OS); Meeting

AGENCY: National Aeronautics and Space Administration.

ACTION: Notice of meeting.

SUMMARY: In accordance with the Federal Advisory Committee Act, Pub. L. 92–463, as amended, the National Aeronautics and Space Administration announces a forthcoming meeting of the NASA Advisory Council, Space Science Advisory Committee, Astronomical Search for Origins Planetary Systems Subcommittee.

DATES: Monday, February 25, 2002, 8:30 a.m. to 5:30 p.m.

ADDRESSES: Doubletree Hotel Pasadena, 191 N Los Robles, Pasadena, California 91101.

FOR FURTHER INFORMATION CONTACT: Ms. Marian Norris, Code SB, National Aeronautics and Space Administration, Washington, DC 20546, (202) 358–4452.

SUPPLEMENTARY INFORMATION: The meeting will be open to the public up to the capacity of the room. The agenda for the meeting includes the following topics:

—SS Budget

—SIRTF Update

—Wide Field Camera 3 (HST instrument) Update

—Origins Theme Update

—Roadmapping Update

It is imperative that the meeting be held on these dates to accommodate the scheduling priorities of the key participants. Visitors will be requested to sign a visitor's register.

Sylvia K. Kraemer,

Advisory Committee Management Officer, National Aeronautics and Space Administration.

[FR Doc. 02–2536 Filed 1–31–02; 8:45 am]

BILLING CODE 7510–01–P

NUCLEAR REGULATORY COMMISSION

[Docket No. 50–461]

Amergen Energy Company, LLC; Notice of Consideration of Issuance of Amendment to Facility Operating License and Opportunity for a Hearing

The U.S. Nuclear Regulatory Commission (the Commission) is considering issuance of an amendment to Facility Operating License No. NPF–62, issued to AmerGen Energy Company, LLC (AmerGen, the licensee), for operation of the Clinton Power Station (CPS) located in DeWitt County, Illinois.

The proposed amendment would allow an increase in the licensed power from 2894 megawatts thermal (MWt) to 3473 MWt. This change represents an increase of approximately 20 percent above the current licensed power at CPS, and is considered an extended power uprate. The proposed amendment would also change the operating license and the technical specifications appended to the operating license to provide for implementing uprated power operation.

AmerGen submitted the amendment request by letter dated June 18, 2001. The application was supplemented by letters dated September 7 and 28, October 17, 23, 26, and 31, November 8 (2 letters), 20, 21, 29, and 30, and December 5, 6, 7, 13 (2 letters), 20, 21, and 26, 2001, and January 8, 15, and 16, 2002.

Before issuance of the proposed license amendment, the Commission will have made findings required by the Atomic Energy Act of 1954, as amended (the Act), and the Commission's regulations.

By March 4, 2002, the licensee may file a request for a hearing with respect to issuance of the amendment to the subject facility operating license, and any person whose interest may be affected by this proceeding and who wishes to participate as a party in the proceeding must file a written request for a hearing and a petition for leave to intervene. Requests for a hearing and a petition for leave to intervene shall be filed in accordance with the Commission's ''Rules of Practice for Domestic Licensing Proceedings'' in 10 CFR Part 2. Interested persons should consult a current copy of 10 CFR 2.714, which is available at the Commission's Public Document Room, located at One White Flint North, 11555 Rockville Pike (first floor), Rockville, Maryland or electronically on the Internet at the NRC Web site *http://www.nrc.gov/NRC/CFR/index.html.* If there are problems in

accessing the document, contact the Public Document Room Reference staff at 1–800–397–4209, 301–415–4737, or by e-mail to *pdr@nrc.gov.* If a request for a hearing or petition for leave to intervene is filed by the above date, the Commission or an Atomic Safety and Licensing Board, designated by the Commission or by the Chairman of the Atomic Safety and Licensing Board Panel will rule on the request and/or petition; and the Secretary or the designated Atomic Safety and Licensing Board will issue a notice of hearing or an appropriate order.

As required by 10 CFR 2.714, a petition for leave to intervene shall set forth with particularity the interest of the petitioner in the proceeding, and how that interest may be affected by the results of the proceeding. The petition must specifically explain the reasons why intervention should be permitted with particular reference to the following factors: (1) The nature of the petitioner's right under the Act to be made a party to the proceeding; (2) the nature and extent of the petitioner's property, financial, or other interest in the proceeding; and (3) the possible effect of any order that may be entered in the proceeding on the petitioner's interest. The petition must also identify the specific aspect(s) of the subject matter of the proceeding as to which petitioner wishes to intervene. Any person who has filed a petition for leave to intervene or who has been admitted as a party may amend the petition without requesting leave of the Board up to 15 days prior to the first prehearing conference scheduled in the proceeding, but such an amended petition must satisfy the specificity requirements described above.

Not later than 15 days prior to the first prehearing conference scheduled in the proceeding, a petitioner shall file a supplement to the petition to intervene that must include a list of the contentions that the petitioner seeks to have litigated in the hearing. Each contention must consist of a specific statement of the issue of law or fact to be raised or controverted. In addition, the petitioner shall provide a brief explanation of the bases of each contention and a concise statement of the alleged facts or expert opinion that support the contention and on which the petitioner intends to rely in proving the contention at the hearing. The petitioner must also provide references to those specific sources and documents of which the petitioner is aware and on which the petitioner intends to rely to establish those facts or expert opinion. The petitioner must provide sufficient information to show that a genuine dispute exists with the applicant on a material issue of law or fact. Contentions shall be limited to matters within the scope of the amendment under consideration. The contention must be one that, if proven, would entitle the petitioner to relief. A petitioner who fails to file such a supplement that satisfies these requirements with respect to at least one contention will not be permitted to participate as a party.

Those permitted to intervene become parties to the proceeding, subject to any limitations in the order granting leave to intervene, and have the opportunity to participate fully in the conduct of the hearing, including the opportunity to present evidence and cross-examine witnesses.

A request for a hearing and petition for leave to intervene must be filed with the Secretary of the Commission, U.S. Nuclear Regulatory Commission, Washington, DC 20555–0001, Attention: Rulemakings and Adjudications Staff, or may be delivered to the Commission's Public Document Room, located at One White Flint North, 11555 Rockville Pike (first floor), Rockville, Maryland, by the above date. A copy of the request for a hearing and the petition should also be sent to the Office of the General Counsel, U.S. Nuclear Regulatory Commission, Washington, DC 20555–0001, and to Edward J. Cullen, Jr., Vice President and General Counsel, Exelon Generation Company, LLC, 300 Exelon Way, KSB 3-W, Kennett Square, PA 19348, attorney for the licensee.

Nontimely filings of petitions for leave to intervene, amended petitions, supplemental petitions and/or requests for a hearing will not be entertained absent a determination by the Commission, the presiding officer, or the Atomic Safety and Licensing Board that the petition and/or request should be granted based upon a balancing of the factors specified in 10 CFR 2.714(a)(1)(i)-(v) and 2.714(d).

If a request for a hearing is received, the Commission's staff may issue the amendment after it completes its technical review and prior to the completion of any required hearing if it publishes a further notice for public comment of its proposed finding of no significant hazards consideration in accordance with 10 CFR 50.91 and 50.92.

For further details with respect to this action, see the application for amendment dated June 18, 2001, as supplemented by letters dated September 7 and 28, October 17, 23, 26, and 31, November 8 (2 letters), 20, 21, 29, and 30, and December 5, 6, 7, 13 (2 letters), 20, 21, and 26, 2001, and January 8, 15, and 16, 2002, which are available for public inspection at the Commission's Public Document Room, located at One White Flint North, 11555 Rockville Pike (first floor), Rockville, Maryland. Publicly available records will be accessible electronically from the Agencywide Documents Access and Management Systems (ADAMS) Public Electronic Reading Room on the Internet at the NRC Web site, *http://www.nrc.gov/NRC/ADAMS/index.html.* Persons who do not have access to ADAMS or who encounter problems in accessing the documents located in ADAMS, should contact the NRC Public Document Room Reference staff by telephone at 1–800–397–4209, 301–415–4737 or by e-mail to pdr@nrc.gov.

Dated at Rockville, Maryland, this 28th day of January 2002.

For the Nuclear Regulatory Commission.

Jon B. Hopkins,

Senior Project Manager, Section 2, Project Directorate III, Division of Licensing Project Management, Office of Nuclear Reactor Regulation.

[FR Doc. 02–2499 Filed 1–31–02; 8:45 am]

BILLING CODE 7590–01–P

NUCLEAR REGULATORY COMMISSION

[Docket Nos. 50–352 and 50–353]

Exelon Generation Company, LLC; Notice of Withdrawal of Application for Amendments to Facility Operating Licenses

The U.S. Nuclear Regulatory Commission (the Commission) has granted the request of Exelon Generation Company, LLC, (the licensee) to withdraw its June 13, 2001, application for proposed amendments to Facility Operating License Nos. NPF–39 and NPF–85 for the Limerick Generating Station, Units 1 and 2, located in Montgomery County, Pennsylvania.

The proposed amendments would have modified the facility and the facility Technical Specifications by replacing the interim corrective actions for thermal-hydraulic power oscillations with an automatic reactor scram from the output of the oscillation power range monitor. However, by letter dated December 13, 2001, the licensee withdrew the proposed change.

For further details with respect to this action, see the application for amendment dated June 13, 2001, and the licensee's letter dated December 13, 2001, which withdrew the application for license amendments. Documents may be examined, and/or copied for a fee, at the NRC's Public Document Room (PDR), located at One White Flint

North, 11555 Rockville Pike (first floor), Rockville, Maryland. Publicly available records will be accessible electronically from the Agencywide Documents Access and Management Systems (ADAMS) Public Electronic Reading Room on the internet at the NRC Web site, *http://www.nrc.gov/reading-rm/adams/html.* Persons who do not have access to ADAMS or who encounter problems in accessing the documents located in ADAMS, should contact the NRC PDR Reference staff by telephone at 1–800–397–4209, 301–415–4737, or by e-mail to *pdr@nrc.gov.*

Dated at Rockville, Maryland, this 28th day of January 2002.

For the Nuclear Regulatory Commission.

Christopher Gratton,

Sr. Project Manager, Section 2, Project Directorate I, Division of Licensing Project Management, Office of Nuclear Reactor Regulation.

[FR Doc. 02–2498 Filed 1–31–02; 8:45 am]

BILLING CODE 7590–01–P

NUCLEAR REGULATORY COMMISSION

[Docket Nos. 50–327–OLA, 50–328–OLA, & 50–390–OLA; ASLBP No. 02–796–01–OLA]

Tennessee Valley Authority; Sequoyah Nuclear Plant, Units 1 & 2; Watts Bar Nuclear Plant, Unit 1; Establishment of Atomic Safety and Licensing Board

Pursuant to delegation by the Commission dated December 29, 1972, published in the **Federal Register**, 37 FR 28,710 (1972), and sections 2.105, 2.700, 2.702, 2.714, 2.714a, 2.717, 2.721, and 2.772(j) of the Commission's Regulations, all as amended, an Atomic Safety and Licensing Board is being established to preside over the following proceeding:

Tennessee Valley Authority, Sequoyah Nuclear Plant, Units 1 & 2, Watts Bar Nuclear Plant, Unit 1.

This Board is being established pursuant to two notices of consideration of issuance of operating license amendment, proposed no significant hazards consideration determination, and opportunity for a hearing published in the **Federal Register** (66 FR 65,000 and 65,005 (Dec. 17, 2001)). The proceeding involves petitions for intervention submitted January 16, 2002, by We the People, Inc., Tennessee, (WPIT) and the Blue Ridge Environmental Defense League (BREDL), respectively, challenging requests by the Tennessee Valley Authority (TVA) to amend the operating licenses for the Sequoyah Nuclear Plant, Units 1 and 2, and the Watts Bar Nuclear Plant, Unit 1.[1] The amendments would change facility technical specifications to allow the plants to provide incore irradiation services for the United States Department of Energy for the production of tritium for national defense purposes.

The Board is comprised of the following administrative judges:

Thomas S. Moore, Chair, Atomic Safety and Licensing Board Panel, U.S. Nuclear Regulatory Commission, Washington, DC 20555–0001

Dr. Peter S. Lam, Atomic Safety and Licensing Board Panel, U.S. Nuclear Regulatory Commission, Washington, DC 20555–0001

Dr. Thomas S. Elleman, Atomic Safety and Licensing Board Panel, U.S. Nuclear Regulatory Commission, Washington, DC 20555–0001

All correspondence, documents, and other materials shall be filed with the administrative judges in accordance with 10 CFR 2.701.

Issued at Rockville, Maryland, this 28th day of January 2002.

G. Paul Bollwerk, III,

Chief Administrative Judge, Atomic Safety and Licensing Board Panel.

[FR Doc. 02–2500 Filed 1–31–02; 8:45 am]

BILLING CODE 7590–01–P

[1] Although the TVA license amendment requests that are the subject of the WPIT and BREDL hearing requests that triggered this Licensing Board constitution notice were submitted separately, involve different facilities, and were the subject of separate hearing opportunity notices, both amendments are challenged by each of the petitioners. Under the circumstances, one Licensing Board is being established to consider both contested TVA applications in a consolidated proceeding. Any objection to this consolidation by any of the participants to the proceeding should be raised with the Licensing Board promptly.

NUCLEAR REGULATORY COMMISSION

Decommissioning Criteria for the West Valley Demonstration Project (M–32) at the West Valley Site; Final Policy Statement

AGENCY: Nuclear Regulatory Commission.

ACTION: Final policy statement.

SUMMARY: On December 3, 1999 (64 FR 67952), the Commission issued, for public comment, a draft policy statement that would approve the application of the U.S. Nuclear Regulatory Commission's (NRC's) License Termination Rule (LTR), as the decommissioning criteria for the West Valley Demonstration Project (WVDP) at the West Valley site. It also held a public meeting, on January 5, 2000, to solicit public comment on the draft. This final policy statement was developed after considering public comments on the draft, and continues to apply the LTR as the criteria for the WVDP at the West Valley site.

EFFECTIVE DATE: February 1, 2002.

FOR FURTHER INFORMATION, CONTACT: Chad Glenn, Office of Nuclear Material Safety and Safeguards, Mail Stop T–8F37, U.S. Nuclear Regulatory Commission, Washington, DC 20555–0001.

SUPPLEMENTARY INFORMATION:

I. Introduction
II. Background (Draft Policy Statement)
III. Overview of Public Comments
IV. Summary of Public Comments and Responses to Comments
A. Comments on the LTR
B. Comments on LTR guidance
C. Comments on implementing the LTR
D. Comments on NRC's process for prescribing the decommissioning criteria
E. Comments on jurisdictional aspects of prescribing the decommissioning criteria
F. Comments on the use of incidental waste criteria at the West Valley site
G. Comments related to how the site should be decommissioned
H. Comments on the wording of the draft policy statement
I. Other comments
V. Final Policy Statement

I. Introduction

This final policy statement is being issued under the authority of the WVDP Act, to prescribe decommissioning criteria for the WVDP.

II. Background (Draft Policy Statement)

From 1966 to 1972, under an Atomic Energy Commission (AEC) license, Nuclear Fuel Services (NFS) reprocessed 640 metric tons of spent fuel at its West Valley, New York, facility—the only commercial spent fuel reprocessing plant in the U.S. The facility shut down, in 1972, for modifications to increase its seismic stability and to expand its capacity. In 1976, without restarting the operation, NFS withdrew from the reprocessing business and returned control of the facilities to the site owner, the New York State Energy Research and Development Authority (NYSERDA). The reprocessing activities resulted in about 2.3 million liters (600,000 gallons) of liquid high-level waste (HLW) stored below ground in tanks, other radioactive wastes, and residual radioactive contamination.

The West Valley site was licensed by AEC, and then NRC, until 1981, when the license was suspended to execute

the 1980 WVDP Act, Pub. L. 96–368.[1] The WVDP Act authorized the U.S. Department of Energy (DOE), in cooperation with NYSERDA, the owner of the site and the holder of the suspended NRC license, to: (1) Carry out a liquid-HLW management demonstration project; (2) solidify, transport, and dispose of the HLW that exists at the site; (3) dispose of low-level waste (LLW) and transuranic waste produced by the WVDP, in accordance with applicable licensing requirements; and (4) decontaminate and decommission facilities used for the WVDP, in accordance with requirements prescribed by NRC. NYSERDA is responsible for all site facilities and areas outside the scope of the WVDP Act. Although NRC suspended the license covering the site until completion of the WVDP, NRC has certain authorities, under the WVDP Act, that include prescribing decommissioning criteria for the tanks and other facilities in which the HLW solidified under the project was stored, the facilities used in the solidification of the waste, and any material and hardware used in connection with the WVDP. It should also be noted that DOE is not an NRC licensee and DOE's decommissioning activities for the WVDP at the West Valley site are conducted under the WVDP Act and not the Atomic Energy Act (AEA).

The WVDP is currently removing HLW from underground tanks at the site, vitrifying it, and storing it onsite for eventual offsite disposal in a Federal repository. The vitrification operations are nearing completion. In addition to the vitrified HLW, the WVDP operations have also produced LLW and transuranic waste which, under the Act, must be disposed of in accordance with applicable licensing requirements. Besides the HLW at the site, the spent fuel reprocessing and waste disposal operations resulted in a full range of buried radioactive wastes and structural and environmental contamination at the site.

In 1989, DOE and NYSERDA began to develop a joint Environmental Impact Statement (EIS) for project completion and site closure, and to evaluate waste disposal and decommissioning alternatives. Because the WVDP Act authorizes NRC to prescribe decommissioning criteria for the project, NRC and DOE agreed on NRC's participation as a cooperating agency on the EIS, with DOE and NYSERDA, to aid NRC in its decision on decommissioning criteria. The draft EIS was published in 1996. Subsequently, DOE decided to descope this EIS into two separate EISs to address: (1) Near-term decontamination and waste management at the WVDP; and (2) decommissioning, long-term monitoring, and stewardship of the site.[2] The NRC will not be a Cooperating Agency on the decontamination and waste management EIS because the Commission is not prescribing criteria for decontamination activities considered in this EIS. The NRC will be a Cooperating Agency on the EIS for decommissioning under the WVDP Act. The WVDP Act does not address license termination of the NRC license for the site, or portions thereof. Any such license termination will be conducted (if license termination is possible and pursued) under the Atomic Energy Act (AEA) of 1954, as amended. If NYSERDA pursues either full or partial license termination of the NRC license, NRC will need to conduct an environmental review to determine if an EIS is necessary to support license termination.

After public review of the draft EIS, the WVDP convened the West Valley Citizen Task Force (CTF), in early 1997, to obtain stakeholder input on the EIS. The CTF recommendations for the preferred alternative in the EIS were completed in July 1998. In the latter half of 1997 (during the period that the CTF was working on its recommendations), NRC's LTR was published (62 FR 39058; July 21, 1997).

The Commission published a draft policy statement on decommissioning criteria for the WVDP at the West Valley site, for public comment, and a notice of a public meeting in the **Federal Register** on December 3, 1999 (64 FR 67952).[3] The public meeting, to solicit public comment on the draft, was held on January 5, 2000. As a result of that meeting, the Commission extended the comment period to April 1, 2000. This final policy statement was developed after considering the public comments on the draft. This final policy statement recognizes that a flexible approach to decommissioning is needed both to ensure that public health and safety and the environment are protected and to define a practical resolution to the challenges that are presented by the site. In that regard, the Commission has decided to prescribe the LTR criteria for the WVDP at the West Valley site, reflecting the fact that the applicable decommissioning goal for the entire NRC-licensed site is compliance with the requirements of the LTR. However, the Commission recognizes that health and safety and cost-benefit considerations may justify the evaluation of alternatives that do not fully comply with the LTR criteria. For example, the Commission would consider an exemption allowing higher limits for doses on a failure of institutional control if it can be rigorously demonstrated that protection of the public health and safety for future generations could be reasonably assured through more robust engineered barriers and/or increased long-term monitoring and maintenance. The Commission is prepared to provide flexibility to assure cleanup to the maximum extent technically and economically feasible.

It should be noted that the subpart E of 10 CFR part 20 (LTR) does contain provisions for alternate criteria and subpart N of 10 CFR part 20 contains provisions for potential exemptions,[4] with both alternatives based on a site-specific analysis which demonstrates that public health and safety will be adequately protected with reasonable assurance. If the NRC license cannot be terminated in a manner which provides reasonable assurance of adequate protection of the public health and safety, then the appropriate Commission action may be to require a long term or even a perpetual license for an appropriate portion of the site until, if and when possible, an acceptable alternative is developed to permit actual license termination.[5]

[1] The State of New York licenses a low-level waste disposal area at the West Valley site. Unless otherwise indicated, the terms ''West Valley site'' or ''site'' used in this Policy Statement refers to the NRC-licensed portions of the site.

[2] 66 FR 16447 (March 26, 2001).

[3] Before issuing the draft policy statement for comment, the NRC staff proposed decommissioning criteria for West Valley to the Commission in a Commission Paper entitled ''Decommissioning Criteria for West Valley,'' dated October 30, 1998 (SECY–98–251). On January 12, 1999, the Commission held a public meeting, on SECY–98–251, to obtain input from interested parties. Based on the results from this meeting, the Commission issued a Staff Requirements Memorandum (SRM), on January 26, 1999, requesting additional information on the staff's proposed decommissioning criteria for West Valley. In response to the January 26, 1999, SRM, the staff provided SECY–99–057, to the Commission, entitled ''Supplement to SECY–98–251, 'Decommissioning Criteria for West Valley.' '' Based on the contents of SECY–98–251, SECY–99–057, and written and oral comments from interested parties, the Commission issued an SRM on June 3, 1999, detailing its decisions on the decommissioning criteria for West Valley.

[4] Exemptions to NRC regulations can be issued to NRC licensees if the Commission determines that the exemption is authorized by law and would not result in undue hazard to life or property. NYSERDA is the licensee for the West Valley site and DOE is acting as a surrogate for NYSERDA until the NYSERDA license is reinstated at the end of the WVDP.

[5] If a long term or perpetual license is necessary for any portion of the site, it is the Commission's intent that that portion of the site will be decontaminated in the interim to the extent technically and/or economically feasible. In

Based on the public comments received, the Commission has revisited the issue of ''incidental waste'' at West Valley. The Commission has decided to issue incidental waste criteria to clarify the status of and classify any residual wastes present after cleaning of the high-level radioactive waste (HLW) tanks at West Valley. Previously, the NRC has provided advice to DOE concerning DOE's classification of certain waste as incidental waste for clean-up of HLW storage tanks at both Hanford and Savannah River. As noted above, NRC intends to apply the LTR decommissioning criteria as the decommissioning goal for the entire NRC-licensed portion of the site. The Commission has decided that the most recent advice provided to DOE for the classification of incidental waste at Savannah River, with some additional modifications, provides the appropriate criteria which should be applied to West Valley. Specifically, the Commission is now providing the following criteria for classification of the incidental waste (which will not be deemed to be HLW) at West Valley:

(1) The waste should be processed (or should be further processed) to remove key radionuclides to the maximum extent that is technically and economically practical; and

(2) The waste should be managed, so that safety requirements comparable [6] to the performance objectives in 10 CFR part 61 subpart C, are satisfied.

Consistent with the overall approach in applying the LTR to the WVDP and to the entire NRC-licensed site following conclusion of the WVDP, the resulting calculated dose from the incidental waste is to be integrated with all the other calculated doses from the residual radioactive material at the NRC-licensed site to ensure that the LTR criteria are met. This is appropriate because the Commission does not intend to establish separate dose standards for various sections of the NRC-licensed site.[7]

III. Overview of Public Comments

Twenty-eight organizations and individuals submitted written comments on the draft policy statement. Comments also were provided at the public meeting held on January 5, 2000. The commenters represented a variety of interests. Comments were received from Federal and State agencies, citizen and environmental groups, a native American organization, and individuals. The commenters offered over 200 specific comments and represented a diversity of views. The commenters addressed a wide range of issues concerning the decommissioning and closure of the WVDP and West Valley site. The reaction to the draft policy statement was generally supportive. However, viewpoints were expressed on the LTR and LTR guidance and how both should be applied at West Valley. In addition, there were comments on NRC's process for prescribing the decommissioning criteria and other issues specific to West Valley.

IV. Summary of Public Comments and Responses to Comments

The following sections A through I represent major subject areas and describe the principal public comments received on the draft policy statement (organized according to the major subject areas) and present NRC responses to those comments.

(A) Comments on the LTR (restricted release; institutional controls; as low as reasonably achievable (ALARA); financial assurance; alternate criteria; time line for dose calculations);

(B) Comments on LTR guidance (critical group, engineered barriers, cost/benefit analysis);

(C) Comments on implementing the LTR (continued Federal or State onsite presence, perpetual license);

(D) Comments on NRC's process for prescribing the decommissioning criteria (when to prescribe the criteria; use of the LTR ''Generic Environmental Impact Statement'' (GEIS) to support the use of the LTR at West Valley; NRC's National Environmental Policy Act (NEPA) obligation for prescribing the West Valley decommissioning criteria);

(E) Comments on jurisdictional aspects of prescribing the decommissioning criteria;

(F) Comments on the use of incidental waste criteria at West Valley;

(G) Comments related to how the site should be decommissioned (waste disposition, consideration of pathways for dose, and contaminant transport);

(H) Comments on the wording of the draft policy statement (use of the word ''prescribe,'' paraphrasing the LTR and other statements on West Valley); and,

(I) Other comments (implications of the policy statement regarding native Americans, transuranic waste issue).

The comments received from the public in writing during the comment period and verbally during the January 5, 2000, public meeting have been factored into the Commission's decision-making on this final policy statement.

A. Comments on the LTR

The draft policy statement presented NRC's LTR as the decommissioning criteria for the WVDP and the West Valley site. Although there was general support for the use of the LTR as the decommissioning criteria for both the WVDP and West Valley site, there were a number of comments on the LTR. Specifically:

A.1 Comment. A number of commenters were concerned that the use of the LTR's restricted release concept, which includes the use of institutional controls, to decommission West Valley may not be appropriate because of the magnitude of the waste currently on-site and the potential for this waste to provide an unacceptable dose to members of the public if controls fail.

A. 2 Response. The LTR criteria consider doses to members of the public from the loss of institutional controls. The loss of institutional controls will need to be considered in the DOE/NYSERDA EIS.[8] Absent an exemption from the LTR provision in 10 CFR part 20, a site, or part thereof, that cannot meet the restricted release provisions of the LTR, must remain under an NRC license. The Commission will consider

addition, if a long-term or perpetual license is determined to be appropriate, the NRC takes no position on which entity should be the long-term licensee as that decision, as well as decisions regarding long term financial contributions, should be made pursuant to negotiations involving DOE, New York, and possibly the U.S. Congress. Also, under the WVDP Act, the NRC is only addressing the public health and safety aspects of decommissioning selected portions of the site. Other potential issues between DOE and NYSERDA concerning the West Valley Site are not within NRC's authority to resolve.

[6] The dose methodology used in 10 CFR part 61 subpart C is different from that used in the newer 10 CFR part 20 subpart E. However, the resulting allowable doses are comparable and NRC expects DOE to use the newer methodology in 10 CFR part 20 subpart E. Part 61 is based on International Commission on Radiological Protection Publication 2 (ICRP 2) and part 20 is based on ICRP 26.

[7] Applying the LTR, the total annual dose to an average member of the critical group for the site, including the resulting does from the incidental waste, should be less than or equal to 25 mrem/yr TEDE. The Commission is not establishing a separate dose standard for the incidental waste such that the average member of the critical group potentially receive a dose of 25 mrem/yr TEDE from the rest of the NRC-licensed site and 25 mrem/yr TEDE from the incidental waste.

[8] DOE has decided to descope the draft 1996 EIS into two separate EISs. DOE will be the lead agency on the EIS that will address WVDP facility decontamination and management of waste currently stored at the site. NRC expects to be kept informed of progress as required under the DOE/NRC Memorandum of Understanding (MOU). DOE and NYSERDA will be the lead agencies on the EIS that will address decommissioning. NRC expects to participate as an EIS cooperating agency. Hereafter, this second EIS where NRC will be a cooperating agency will either be referred to as the decommissioning EIS or the DOE/NYSERDA EIS, unless otherwise noted.

granting an exemption to the LTR criteria if it determines the exemption is authorized by law and would not result in undue hazard to life or property. The Commission intends to involve the public in the processing of any exemption request consistent with the ''public participation'' provision in 10 CFR 20.1405, and will involve the Environmental Protection Agency (EPA) if the exemption request involves criteria greater than the dose criteria of 10 CFR 20.1402, 20.1403(b), or 20.1403(d)(1)(i)(A). Such an exemption request will also require the approval of the Commission consistent with 10 CFR 20.1404(b).

A. 3 Comment. Some commenters also were concerned about the adequacy of the LTR's financial assurance requirements for maintaining institutional controls for restricted release at West Valley, especially if the financial assurance relies on future Government appropriations that are not guaranteed.

A. 4 Response. In general, it is assumed that when a Government agency certifies that it will seek appropriations, to maintain institutional controls for the purposes of protecting public health and safety, the appropriations will be authorized. The Commission believes that it is reasonable to expect Federal and State agencies to meet their commitments to obtain funding for institutional controls to provide for the protection of the public health and safety.

A. 5 Comment. A number of commenters were also concerned that the time line specified for dose calculations in the LTR (1000 years) is too short for difficult sites like West Valley.

A. 6 Response. In the development of the LTR, the Commission considered comments seeking a time period for dose analysis longer than 1000 years. Section F.7 in the LTR ''Statement of Considerations,'' 62 FR 39058 (July 21, 1997). The Commission concluded that for the types of facilities and source terms considered, it was reasonable to use a 1000-year period. However, the West Valley site presents some unique challenges in that significant quantities of mobile, long-lived radionuclides are present on site. Because under NEPA an evaluation of reasonably foreseeable impacts is required, the Commission believes that an analysis of impacts beyond 1000 years should be provided in the DOE/NYSERDA EIS. Thus, information will need to be evaluated to determine if peak doses might occur after 1000 years and to define dose consequences and impacts on potential long-term management of residual radioactivity at the site. Depending upon the outcome of the EIS review, the Commission may need to consider the need for environmental mitigation.

A. 7 Comment. Some commenters were concerned about the possible application of alternate criteria, as allowed under the LTR, to West Valley, or that the policy statement should at least clearly identify the dose limit cap under alternate criteria.

A. 8 Response. In addition to the unrestricted release limit of 25 mrem/yr TEDE, the LTR also contains alternate criteria for restricted release, which allows for a dose limit of up to 100 mrem/yr TEDE, with restrictions in place, and caps the public dose limit at 100 or 500 mrem/yr TEDE if the restrictions fail. Applying alternate criteria to a specific site requires opportunities for public involvement, coordination with the EPA, and direct approval of the Commission. The alternate criteria in the LTR were developed for difficult sites to minimize the need to consider exemptions to the LTR, although exemptions also may be considered. Under appropriate circumstances and based on a site-specific analysis, the Commission considers the application of alternate criteria protective of public health and safety. Absent a detailed site-specific analysis, it is premature for the Commission to make any judgments, at this time, on the acceptability or non-acceptability of applying alternate criteria or exemptions to the WVDP or any portion of the NRC-licensed site. In any event, neither the alternate criteria in the LTR nor exemptions will be approved by the Commission without full prior public participation, involvement of the EPA, and a Commission determination that there is reasonable assurance that there would not be undue hazard to life and property.

A. 9 Comment. There were also comments about the use of the ALARA process in the LTR at West Valley. Some believed that the ALARA process might be used to justify dose limits higher than those allowed by the LTR.

A. 10 Response. As stated previously, the LTR does allow for releases with different dose limits. Generally, ALARA is used to reduce doses below authorized limits. Under the LTR, the ALARA process is not used to permit doses above the 25 mrem/yr TEDE limit without restrictions, the 100 mrem/yr TEDE limit with restrictions, or the 500 mrem/yr TEDE cap if restrictions fail.

B. Comments on LTR guidance

A variety of comments were received on NRC's LTR guidance as it relates to West Valley. Since the time that NRC's LTR became final in 1997, the NRC staff has been developing guidance to support it. In September 2000, the NRC released guidance for decommissioning, in the form of a standard review plan (SRP) (''NMSS Decommissioning Standard Review Plan,'' NUREG–1727).

B. 1 Comment. A number of commenters expressed concern with how the critical group would be defined for dose assessment purposes.

B. 2 Response. For the LTR, the critical group means the group of individuals reasonably expected to receive the greatest exposure to residual radioactivity for any applicable set of circumstances (10 CFR 20.1003). The ''Statement of Considerations'' for the LTR notes that the critical group would be the group of individuals reasonably expected to be the most highly exposed, considering all reasonable potential future uses of the site, based on prudently conservative exposure assumptions and parameter values within modeling calculations. NRC's SRP for decommissioning addresses two generic critical group scenarios—the ''resident farmer'' and the ''building occupancy'' scenarios. The SRP also presents approaches for establishing site-specific critical groups based on specific land use, site restrictions, and/or site-specific physical conditions. DOE/NYSERDA derivation of the critical groups for West Valley will need to be addressed in the EIS documents. In addition to NRC review and comment, the EIS documents will be available for public review and comment.

B. 3 Comment. There were also several comments relating concerns that long-term stewardship costs and impacts on special populations will not be properly factored into the cost/benefit analysis, or that there should be better guidance provided on what should be considered in the cost/benefit analysis.

B. 4 Response. DOE and NYSERDA will determine the extent to which these issues are covered in the DOE/NYSERDA EIS. In addition, NRC will review and comment on any cost/benefit analysis in the EIS. The cost/benefit analysis that DOE/NYSERDA develop for West Valley will need to be part of the EIS documents available for public review and comment.

B. 5 Comment. Some commenters suggested that there should be criteria for what are allowable engineered

barriers and whether or not they are considered institutional controls.

B. 6 Response. Because of the wide range of residual radioactive contamination encountered at decommissioning sites licensed by NRC, the LTR and NRC's decommissioning guidance are not prescriptive as to the criteria for, or acceptability of, site-specific institutional controls and engineered barriers. The ''Statement of Considerations'' for the LTR might be read to conclude that engineered barriers are included within institutional controls. However, neither term is defined. In the Commission's view, ''engineered barriers'' referred to in the ''Statement of Considerations'' for the LTR are distinct and separate from institutional controls. Used in the general sense, an engineered barrier could be one of a broad range of barriers with varying degrees of durability, robustness, and isolation capability. Thus, NRC guidance in Appendix I of the SRP on the LTR distinguishes institutional controls from physical controls and engineered barriers. Institutional controls are used to limit intruder access to, and/or use of, the site to ensure that the exposure from the residual radioactivity does not exceed the established criteria. Institutional controls include administrative mechanisms (e.g., land use restrictions) and may include, but not be limited to, physical controls (e.g., signs, markers, landscaping, and fences) to control access to the site and minimize disturbances to engineered barriers. There must be sufficient financial assurance to ensure adequate control and maintenance of the site and institutional controls must be legally enforceable and the entity charged with their enforcement must have the capability, authority, and willingness to enforce the controls. Generally, engineered barriers are passive man-made structures or devices intended to improve a facility's ability to meet a site's performance objectives. Institutional controls are designed to restrict access, whereas engineered barriers are usually designed to inhibit water from contacting waste, limit releases, or mitigate doses to intruders. The isolation capability, durability, and robustness of a specific barrier will need to be evaluated in the DOE/NYSERDA EIS. The ability of a barrier to inhibit access of the inadvertent intruder is a separate issue from whether a barrier is an institutional control. The dose analyses for a site with engineered barriers will need to consider the reasonableness of a breach by an inadvertent intruder.

C. Comments on Implementing the LTR

C. 1 Comment. There were some comments identifying who should be the long-term steward of the site if long-term stewardship is required as part of site closure. Some commenters also provided suggestions on how site long-term stewardship should be maintained at West Valley if it is needed (onsite staff, perpetual license).

C. 2 Response. NRC expects that these site-specific issues will be covered in the DOE/NYSERDA EIS and addressed in the preferred alternative. The identification of a long-term custodian is not an NRC responsibility but will be determined from negotiations involving DOE and NYSERDA and possibly the U.S. Congress. From the NRC perspective, both DOE and NYSERDA represent governmental entities and either would be acceptable as a long-term custodian.

C. 3 Comment. One commenter requested consideration of how the LTR would be implemented on the decommissioned portions of the site if there were areas of the site that could not meet the LTR.

C. 4 Response. Although the LTR does not specifically address differing release standards on a single site, NRC recognizes that the approach to decommissioning at West Valley may include portions of the site being released for unrestricted use, and portions of the site being released for restricted use, as well as portions of the site remaining under license, because of a failure to meet the LTR. In the Commission's view, the LTR is sufficiently flexible to allow for such circumstances. In particular, the Commission believes that for those portions of the site that are unable to demonstrate compliance with the LTR's restricted release requirements, the dose limits should be viewed as goals in order to ensure that cleanup continues to the maximum extent that is technically and economically feasible. The Commission also believes that after cleanup to the maximum extent technically and economically feasible is accomplished, alternatives to release under the LTR criteria may need to be contemplated. Specific examples of these alternatives are a perpetual license for some parts of the site or exemptions from the LTR. The NRC expects that these issues will be fully addressed in the DOE/NYSERDA EIS.

D. Comments on NRC's Process for Prescribing the Decommissioning Criteria

D.1. DOE recommended, for the reasons described in comments D.1.1, D.1.3, and D.1.5 below, that NRC withhold assigning the LTR as the decommissioning criteria until NRC does a site-specific analysis of the environmental effects of decommissioning West Valley.

D.1.1 Comment. The LTR GEIS (NUREG–1496) does not support the use of the LTR at a complex site like West Valley; therefore, a specific EIS for this action needs to be completed by NRC to finalize the criteria.

D.1.2 Response. Although the LTR GEIS did not specifically address the decommissioning of a spent fuel reprocessing site, it did evaluate the decommissioning of a range of reference facilities (e.g., fuel cycle facilities and reactors). In promulgating the LTR, the Commission stated in Section VI of the ''Statement of Considerations'' that it will conduct an environmental review to ''determine if the generic analysis encompasses the range of environmental impacts at the particular site.'' The Commission further stated that it ''will conduct an independent environmental review for each site-specific decommissioning decision where land use restrictions or institutional controls are relied upon by the licensee or where alternative criteria are proposed'' as it recognized that the environmental impacts for these cases cannot be analyzed on a generic basis. Thus, the environmental impacts from the application of the criteria to the WVDP will need to be evaluated for the various alternative approaches being considered in the process before NRC decides whether to accept the preferred alternative for meeting the criteria permitted by the LTR. NRC expects to be able to rely on the DOE/NYSERDA EIS for this purpose. NRC does not anticipate the need to prepare its own duplicative EIS as NRC can consider the environmental impacts described in the DOE/NYSERDA EIS in approving the particular decommissioning criteria for the WVDP under the LTR. As an EIS cooperative agency, NRC may adopt all or parts of the lead EIS agency's NEPA documents. Under this arrangement, if NRC is satisfied with the final DOE/NYSERDA EIS, then NRC will adopt it to fulfill its NEPA responsibilities under the WVDP Act. If NRC is not satisfied with the final DOE/NYSERDA EIS, then it will adopt as much of it as possible and modify or supplement it as necessary. In such a situation, NRC would publish its own draft EIS document for public review and comment before finalizing it. Once finalized, NRC's West Valley NEPA responsibilities would be fulfilled under the WVDP Act.

The WVDP Act does not address license termination for the site. The actual license termination for the site, if and when pursued, will be conducted under the Atomic Energy Act (AEA) of 1954, as amended. At the time of NRC license termination under the AEA (if license termination is pursued), NRC will need to conduct an environmental review to determine if an EIS is necessary to support license termination.

D.1.3 Comment. The NRC's prescription of decommissioning criteria is not being coordinated with the current NEPA process as suggested by the DOE/NRC Memorandum of Understanding (MOU) on West Valley.

D.1.4 Response. The process described in the DOE/NRC MOU (Section B (4)), for consulting on a site-specific analysis of decommissioning requirements was developed to allow DOE and NRC to evaluate a range of approaches to specifically address the decommissioning of the WVDP. Thereafter, NRC was to prescribe the decommissioning criteria. At the time the MOU was signed, no comprehensive general criteria existed for decommissioning NRC-licensed sites. Decommissioning criteria were determined on a case-by-case basis. However, through the rulemaking process completed in 1997, which promulgated the LTR, there was an evaluation of various regulatory approaches for decommissioning NRC-licensed sites and the selection of a range of regulatory approaches with criteria, in the final rule.

Except as provided in 10 CFR 20.1401, the LTR applies to all NRC's licensed sites. The Commission recognized, as noted in the ''Statement of Considerations'' for the LTR, that there would be sites with complex decommissioning issues that would be resolved by site-specific environmental reviews which considered various alternative methods for decommissioning and application of the LTR. In the Commission's view, the use of the two-step prescribing process—first, the decision to use the LTR, and second, to use the DOE/NYSERDA EIS, to consider the impacts of the different approaches for decommissioning, before deciding whether to accept the particular approach that DOE intends to use to meet the LTR—is consistent with the intent of the MOU that various approaches be analyzed in developing the WVDP decommissioning criteria.

D.1.5 Comment. Finalizing the LTR now as the decommissioning criteria for the WVDP at the West Valley site limits the options for closure of the NRC-licensed Disposal Area (NDA).

D.1.6 Response. The Commission does not believe that prescribing the LTR criteria for the WVDP at the West Valley site as the applicable decommissioning goal for the entire NRC-licensed site will limit DOE from developing acceptable closure options for the NDA or any other part of the NRC-licensed site. Prescribing the LTR now is warranted because NYSERDA, as a licensee of the Commission, is subject to the LTR after NYSERDA's NRC license is reactivated at the conclusion of the WVDP. It follows that DOE should also be subject to the LTR as it is the surrogate for NYSERDA in decommissioning facilities used for the project. Therefore, it is appropriate to prescribe the LTR now for the WVDP, with the site-specific decommissioning issues resolved through the process described in Response D.1.4 above. Applying the LTR to the WVDP will provide an opportunity to DOE, as would be given to any licensee, to consider a range of approaches to achieve acceptable decommissioning, consistent with public dose limits. If parts of the NRC-licensed site cannot meet the LTR, the Commission will consider alternatives to the criteria in the LTR if it can be demonstrated that public health and safety will be protected. The NRC expects that these issues will be fully addressed in the DOE/NYSERDA EIS.

E. Comments on Jurisdictional Aspects of Prescribing the Decommissioning Criteria

E.1 Comment. Many commenters suggested that, because the State-licensed Disposal Area (SDA) is immediately adjacent to the WVDP and part of the West Valley site, the allowable dose from the closure and/or decommissioning of it should be considered comprehensively with the allowable dose from the NRC regulated part of the site.

E.2 Response. NRC's authority only extends to the NRC-licensed portion of the site. It also should be noted that the LTR recognizes that people can be exposed to up to four sources of radiation and still meet the nationally and internationally accepted public dose limit of 100 mrem/yr TEDE in part 20. In considering the environmental impacts for the entire site, the DOE/NYSERDA EIS will need to consider the number of sources to which the critical group may be exposed. However, NRC continues to dialogue with State representatives to exchange information on issues of mutual interest regarding potential sources of public exposure.

E.3 Comment. A few comments were made indicating that NRC ought to prescribe the dose limits in EPA's decommissioning guidance to West Valley, because they are more protective and could be applied to the site after NRC regulatory authority ceases. Likewise, a comment was made that the decommissioning criteria issue between NRC and EPA should be resolved before the criteria are prescribed.

E.4 Response. The Commission believes that the LTR dose limits plus ALARA requirements provide protection comparable to dose limits preferred by EPA in its guidance documents. The Commission notes that the LTR was promulgated by the Commission in 1997 pursuant to an Administrative Procedure Act rulemaking accompanied by a generic EIS and voluminous regulatory analysis, including consideration of numerous public comments. EPA's guidance documents have gone through no such public process. The Commission believes that decommissioning the site to the LTR criteria ensures that public health and safety and the environment will be protected. Although there is a lack of agreement between NRC's rule and EPA's guidance documents on the appropriate upper bounds on decommissioning criteria, the NRC practice of applying ALARA principles to NRC dose limits will most likely result in an NRC approved decommissioned site that satisfies the EPA criteria as well. In fact, EPA has indicated that it believes that the 25 mrem/yr TEDE cleanup dose limit in the LTR will be ''protective at this site.'' *See* Letter from Paul Giardina, EPA to John Greeves, NRC (July 23, 2001). Because the LTR requirements do ensure adequate protection of the public health and the environment, and, as indicated in the preceding paragraph, EPA agrees with this conclusion for West Valley, the Commission believes that it is not necessary to wait for a formal resolution of the differences between NRC and EPA on generic decommissioning standards before proceeding with prescribing site-specific decommissioning criteria for the WVDP. As stated previously, EPA will be involved in any proposal to use alternate criteria in the LTR or exemptions from 10 CFR part 20, if so requested.

F. Comments on the Use of Incidental Waste Criteria at West Valley Site

F.1 Comment. Many comments were received concerning the use of the incidental waste criteria at West Valley. Most commenters did not want NRC to allow for the ''reclassification'' of any HLW at this site to waste incidental to reprocessing. If it were allowed, it

should be done in a way that provides for public participation. One commenter agreed that it will have to be done, but that the Commission should prescribe the criteria that are necessary and appropriate for the incidental waste determination. One other commenter believes that use of DOE's Order 435.1 is the appropriate process for reclassifying residual HLW as incidental.

F.2 Response. Section 6 (4) of the WVDP Act defines HLW as including both (1) liquid wastes which are produced directly in reprocessing, dry solid material derived from such liquid waste and (2) such other material as the Commission designates as HLW for the purposes of protecting the public health and safety. Since 1969, the Commission has recognized the concept of waste incidental to reprocessing, concluding that certain material that otherwise would be classified as HLW need not be disposed of as HLW and sent to a geologic repository because the residual radioactive contamination after decommissioning is sufficiently low as not to represent a hazard to the public health and safety. Consequently, incidental waste is not considered HLW. See, Proposed Rule—Siting of Commercial Fuel Reprocessing Plants and Related Waste Management Facilities (34 FR 8712; June 3, 1969), Final Rule—Siting of Commercial Fuel Reprocessing Plants and Related Waste Management Facilities (35 FR 17530; November 14, 1970), Advance Notice of Proposed Rule-making to Define HLW (52 FR 5992, 5993; February 27, 1987), Proposed Rule—Disposal of Radioactive Waste (53 FR 17709; May 18, 1988), Final Rule—Disposal of Radioactive Waste (54 FR 22578; May 25, 1989), and Denial of Petition for Rulemaking: States of Washington and Oregon, (58 FR 12342; March 3, 1993).

The Commission believes that practical considerations mandate early resolution of the criteria that should guide the incidental waste determination. Vitrification of the high-level wastes at West Valley is nearing completion, at which point DOE intends to close down the vitrification facility. To delay providing the Commission's view for incidental waste could adversely impact the DOE, as it may prove extraordinarily expensive after the vitrification facility is shut down to provide vitrification capacity for any additional waste that must be shipped elsewhere for disposal. Indeed, in light of the fact that the site will ultimately revert to control by NYSERDA under an NRC license, both NYSERDA and NRC have an interest in ensuring that the incidental waste determination need not be revisited.

In light of these considerations, the Commission is now providing the following criteria for incidental waste determinations.

(1) The waste should be processed (or should be further processed) to remove key radionuclides to the maximum extent that is technically and economically practical; and

(2) The waste should be managed so that safety requirements comparable to the performance objectives in 10 CFR part 61 subpart C, are satisfied.

The resulting calculated dose from the incidental waste is to be integrated with all the other calculated doses from the remaining material at the entire NRC-licensed site to ensure that the LTR criteria are met. This is appropriate because the Commission does not intend to establish separate dose standards for various sections of the NRC-licensed site.

Previously the NRC has provided advice to DOE concerning DOE's classification of certain waste as incidental waste for clean-up of HLW storage tanks at both Hanford and Savannah River. As noted above, NRC intends to apply the LTR criteria for the WVDP at the West Valley site, reflecting the fact that the applicable decommissioning goal for the entire NRC-licensed site is in compliance with the requirements of the LTR. The Commission has decided that the most recent advice provided to DOE for the classification of incidental waste at the Savannah River site,[9] with some additional modifications, as the appropriate criteria that should be applicable to West Valley. These criteria are risk-informed and performance-based in that the criteria allow DOE the flexibility to develop innovative approaches to meeting the performance objectives in part 61. In effect, DOE should undertake cleanup to the maximum extent that is technically and economically practical and should achieve performance objectives consistent with those we demand for the disposal of low-level waste. If satisfied, these criteria should serve to provide protection of the public health and safety and the environment and the resulting calculated dose would be integrated with the resulting calculated doses for all other remaining material at the NRC-licensed site. It is the Commission's expectation that it will apply this criteria at the WVDP at the site following the completion of DOE's site activities. In this regard, the impacts of identifying waste as incidental to reprocessing and not HLW should be considered in the DOE's environmental reviews.

[9] *See* NRC Staff Requirements Memorandum ''SECY–99–0284—Classification of Savannah River Residual Tank Waste as Incidental,'' May 30, 2000.

G. Comments Related to How the Site Should Be Decommissioned

G.1 Comment. There were many comments and suggestions that all the waste at this site should be perhaps temporarily stabilized, or packaged and perhaps temporarily stored, but ultimately removed from the site. There were also some comments on what are the important pathways for, and man-made barriers to control, contaminant transport at the site.

G.2 Response. The Commission appreciates the public's identification of, and input on, these issues. The decisions related to alternative approaches to decommissioning the West Valley site will be evaluated in the DOE/NYSERDA EIS, and reviewed by NRC for their ability to protect public health and safety and the environment. The EIS will also be available for public comment before being finalized.

H. Comments on the Wording of the Draft Policy Statement

H.1 Comment. Several comments were made about the last part of a sentence in the Draft Policy Statement under the section entitled ''Decommissioning Criteria for the WVDP.'' It states that ''* * * following the completion of DOE/NYSERDA's EIS and selection of its preferred alternative, the NRC will verify that the specific criteria identified by DOE is within the LTR and will prescribe the use of specific criteria for the WVDP.'' Many suggested that prescribing the use of the specific criteria after the selection of the preferred alternative in the EIS is confusing, not what is meant by the WVDP Act, and would allow adjustment of the criteria after the EIS is completed.

H.2 Response. As addressed above in response to the various comments, the Commission's intent is to prescribe the generally applicable requirements of the LTR now, before the completion of the site-specific EIS. After completion of the site-specific DOE/NYSERDA EIS, NRC will evaluate the compliance status of the preferred alternative with respect to the LTR, as described in the Commission's final policy statement. This is a two-step process. The first step is prescribing the LTR, a set of criteria that allows for unrestricted releases, restricted releases, and alternative releases, that applies to all NRC licensees. Prescribing decommissioning criteria now for the WVDP allows DOE to develop alternative approaches for

meeting those criteria and consider their impacts in its site-specific EIS.

The second step is for NRC to evaluate on a site-specific basis the approach for meeting the LTR. This will be done after the DOE/NYSERDA EIS is completed and NRC adopts it or otherwise produces its own NEPA evaluation of the site-specific criteria developed in the DOE/NYSERDA EIS. NRC will be evaluating DOE's and NYSERDA's preferred alternative for meeting the LTR and other alternatives presented in the DOE/NYSERDA EIS.

This process is in accordance with the ''Statement of Considerations'' for the LTR, which describes the relationship between the GEIS for the LTR and site-specific decommissioning actions. A site-specific EIS is prepared in cases where the range of environmental impacts of the alternatives at a specific site may not be within those considered in the GEIS for the LTR. This is similar to the approach that NYSERDA, as an NRC licensee, would need to meet if the license were not being held in abeyance. The Commission is satisfied that this approach is within the intent of the WVDP Act for the prescription of decommissioning requirements by NRC.

The WVDP Act does not address license termination for the site. The actual license termination for the site, if and when possible, will be conducted under the AEA, as amended. At the time of NRC license termination under the AEA (if license termination is pursued), NRC will need to conduct an environmental review to determine if an EIS is necessary to support actual license termination. The language from the draft policy statement was changed in the final policy statement to reflect the process described above.

H.3 Comment. The policy statement should not paraphrase the LTR and others' statements on West Valley.

H.4 Response. The Commission was attempting to provide context to the draft policy statement by paraphrasing the LTR or others' statements on West Valley. To avoid confusion or misinterpretation in the Final Policy Statement, it will contain a disclaimer to the effect that notwithstanding any paraphrasing of the LTR in the Policy Statement, the language of the LTR itself is controlling in determining how it is to be applied at West Valley. The paraphrasing of others' statements will be avoided.

I. Other Comments

I.1 Comment. What are the implications of the policy statement regarding NRC's policies regarding Native Americans.

I.2 Response. NRC staff has examined the draft policy on decommissioning criteria for the WVDP and has not identified any implications in relation to the Commission's guidance regarding Native Americans. The Commission has directed the NRC staff to implement the spirit and letter of President Clinton's April 29, 1994, Executive Memorandum to ensure that the rights of sovereign Tribal governments are fully respected and to operate within a government-to-government relationship with Federally-recognized Native American Tribes. In addition, the staff has been directed to address Native American issues on a case-by-case basis, operating with Tribal Governments on a government-to-government basis. In response to the interest expressed by the Seneca Nation of Indians in NRC activities at WVDP, the NRC staff has added the Seneca Nation to its service list which will provide the Seneca Nation with copies of documents and meeting notices related to NRC's activities at West Valley that the NRC may publically release. The NRC staff will address issues raised by the Seneca Nation of Indians in accordance with the Commission's guidance.

I.3 Comment. One commenter claims that NRC is required by law to define ''transuranic waste'' for West Valley and determine the disposition of that waste.

I.4 Response. Section 6(5) of the WVDP Act defines transuranic waste for the WVDP in terms of radioisotopes and the lower limit of concentration of those isotopes. It also states that NRC has the authority to prescribe a different concentration limit to protect public health and safety. NRC's position on this issue is detailed in a letter from M. Knapp, NRC, to W. Bixby, DOE, dated August 18, 1987. This letter states that, to demonstrate protection of public health and safety, the transuranic concentration of project wastes acceptable for on-site disposal will be such that, by analysis, safety requirements comparable to the performance objectives in 10 CFR part 61 subpart C are satisfied. The resulting calculated dose from the transuranic waste is to be integrated with all the other calculated doses from the remaining material at the NRC-licensed site to ensure that the LTR criteria are met. As with incidental waste, the Commission is not establishing a separate dose standard that applies solely to the transuranic waste.

V. Final Policy Statement

Statement of Policy

Decommissioning Criteria for the West Valley Demonstration Project (WVDP)

Under the authority of the WVDP Act, the Commission is prescribing NRC's License Termination Rule (LTR) (10 CFR part 20, subpart E) as the decommissioning criteria for the WVDP, reflecting the fact that the applicable decommissioning goal for the entire NRC-licensed site is in compliance with the requirements of the LTR. The criteria of the LTR shall apply to the decommissioning of: (1) The High Level Waste (HLW) tanks and other facilities in which HLW, solidified under the project, was stored; (2) the facilities used in the solidification of the waste; and (3) any material and hardware used in connection with the WVDP. Also under authority of the WVDP Act, the Commission is issuing criteria for the classification of reprocessing wastes that will likely remain in tanks at the site after the HLW is vitrified, subsequently referred to as ''incidental waste.''

The resulting calculated dose from the WVDP at the West Valley site is to be integrated with all other calculated doses to the average member of the critical group from the remaining material at the entire NRC-licensed site to determine whether the LTR criteria are met. This is appropriate because the Commission does not intend to establish separate dose standards for various sections of the NRC-licensed site. The LTR does not apply a single public dose criterion. Rather, it provides for a range of criteria. Briefly stated, for unrestricted release, the LTR specifies a dose criterion of 25 mrem/yr total effective dose equivalent (TEDE) to the average member of the critical group plus as low as reasonably achievable (ALARA) considerations (10 CFR 20.1402). For restricted release, the LTR specifies an individual dose criterion of 25 mrem/year TEDE plus ALARA considerations using legally enforceable institutional controls established after a public participatory process (10 CFR 20.1403). Even if institutional controls fail, individual doses should not exceed 100 mrem/yr TEDE . If it is demonstrated that the 100 mrem/yr TEDE criterion in the event of failure of institutional controls is technically not achievable or prohibitively expensive, the individual dose criterion in the event of failure of institutional controls may be as high as 500 mrem/yr TEDE. However, in circumstances where restricted release is required, if the 100 mrem/yr TEDE criterion is exceeded, and/or the use of alternate criteria has

been determined, the area would be rechecked by a responsible government entity no less frequently than every 5 years and resources would have to be set aside to provide for any necessary control and maintenance of the institutional controls. Finally, the LTR permits alternate individual dose criteria of up to 100 mrem/yr TEDE plus ALARA considerations for restricted release, with institutional controls established after a public participatory process (10 CFR 20.1404). The Commission itself must approve use of the alternative criteria, after coordination with the U.S. Environmental Protection Agency (EPA) and after consideration of the NRC staff's recommendations and all public comments.[10]

The Commission also recognizes that decommissioning of the West Valley site will present unique challenges, which may require unique solutions. As a result, the final end-state may involve a long-term or even a perpetual license or other innovative approaches for some parts of the site where clean up to the LTR requirements are prohibitively expensive or technically impractical. It is important that all parts of the site be decommissioned to the extent technically and economically feasible. Therefore, in addition, the Commission expects decontamination to the maximum extent technically and/or economically feasible for any portion of the site remaining under a long term or perpetual license or for which an exemption from the LTR is sought. In sum, the Commission believes that for those portions of the site that are unable to demonstrate compliance with the LTR's restricted release requirements, the dose limits should be viewed as goals, in order to ensure that cleanup continues to the maximum extent that is technically and economically feasible. If complying with the LTR's restricted release requirements is technically impractical or prohibitively expensive, then an exemption from the LTR may be appropriate, provided that protection of the public and the environment can be maintained.

The Commission's application of the LTR to the WVDP is a two-step process: (1) NRC is now prescribing the application of the LTR; and (2) after the completion of the site-specific Department of Energy (DOE)/New York State Energy Research and Development Authority (NYSERDA) Environmental Impact Statement (EIS)[11] and selection of the preferred alternative, NRC will verify that the approach proposed by DOE is appropriate. The WVDP Act does not address license termination of the NRC license for the site, or portions thereof, which will be conducted (if license termination is possible and pursued) under the Atomic Energy Act (AEA) of 1954, as amended. If full or partial license termination of the NRC license is pursued, at that time NRC will need to conduct an environmental review to determine if an EIS is necessary to support license termination.

Decommissioning Criteria for the NRC-Licensed Disposal Area (NDA) and State-Licensed Disposal Area (SDA)

NRC will apply the criteria in the LTR to the NDA within the West Valley site, because the NDA is under NRC jurisdiction. However, the NDA presents some unique challenges in that some of this material contains significant quantities of mobile, long-lived radionuclides which could potentially remain in this facility. It is recognized that because of the nature of radioactivity at West Valley, reasonably foreseeable impacts might occur after 1000 years, under certain scenarios. Under NEPA, an evaluation of the reasonably foreseeable impacts is required. Therefore, the Commission believes that an analysis of impacts beyond 1000 years should be provided in the DOE/NYSERDA EIS which will be subject to public comment.

NRC does not have regulatory authority to apply the LTR criteria to the SDA adjacent to the WVDP site boundary, because the SDA is regulated by the State of New York. However, NRC recognizes that a cooperative approach with the State to the extent practical should be utilized to apply the LTR criteria in a coordinated manner to the NRC-licensed site and the SDA.

Decommissioning Criteria for License CSF–1 (NRC Site License)

The criteria in the LTR will also apply to the termination of NYSERDA's NRC license on the West Valley site after that license is reactivated. For those portions of the site covered by the WVDP Act, it is NRC's intent to authorize that any exemptions or alternate criteria authorized for DOE to meet the provisions of the WVDP Act will also apply to NYSERDA at the time of site license termination, if license termination is possible. The NRC site license termination is not addressed in the WVDP Act. Therefore the NRC site license termination is subject to the provisions of the Atomic Energy Act of 1954 as amended.

Use of Incidental Waste Criteria at West Valley

Section 6 (4) of the WVDP Act defines HLW as including both (1) liquid wastes which are produced directly in reprocessing, dry solid material derived from such liquid waste and (2) such other material as the Commission designates as HLW for the purposes of protecting the public health and safety. The Commission believes that practical considerations mandate early resolution of the criteria that will guide the classification of incidental waste. The vitrification of the wastes at West Valley is nearing completion, at which point DOE intends to close down the vitrification facility. To delay defining classification criteria for incidental waste could adversely impact the DOE as it may prove extraordinarily expensive after the vitrification facility is shut down to provide vitrification capacity for any additional waste that must be shipped elsewhere for disposal. Indeed, in light of the fact that the site will ultimately revert to control by NYSERDA under an NRC license, both NYSERDA and NRC have an interest in ensuring that the incidental waste determination need not be revisited.

In light of these considerations, the Commission is now providing the following criteria that should be applied to incidental waste determinations.

(1) The waste should be processed (or should be further processed) to remove key radionuclides to the maximum extent that is technically and economically practical; and

(2) The waste should be managed so that safety requirements comparable to the performance objectives in 10 CFR part 61 subpart C, are satisfied.[12]

Consistent with the overall approach in applying the LTR to the WVDP and to the entire NRC-licensed site following

[10] The material set out in the text is a brief summary of the LTR. Notwithstanding the words used in the text, the language of the LTR governs this matter.

[11] DOE has decided to descope the draft 1996 EIS into two separate EISs. DOE will be the lead agency on the EIS that will address WVDP facility decontamination and management of waste currently stored at the site. NRC expects to be kept informed of progress as required under the DOE/NRC Memorandum of Understanding (MOU). DOE and NYSERDA will be the lead agencies on the EIS that will address decommissioning. NRC expects to participate as an EIS cooperating agency. Hereinafter, this second EIS where NRC will be a cooperating agency will either be referred to as the decommissioning EIS or the DOE/NYSERDA EIS, unless otherwise noted.

[12] The dose methodology used in 10 CFR part 61 subpart C is different from that used in the newer 10 CFR part 20 subpart E. However, the resulting allowable doses are comparable and NRC expects DOE to use the newer methodology in 10 CFR part 20 subpart E. part 61 is based on International Commission on Radiological Protection Publication 2 (ICRP 2) and part 20 is based on ICRP 26.

conclusion of the WVDP, the resulting calculated dose from the incidental waste is to be integrated with all the other calculated doses from material remaining material at the entire NRC-licensed site.

Previous Burials Authorized Under 10 CFR Part 20

The ''Statement of Considerations'' for the LTR, Section C.3, Other Exemptions (62 FR 39074) provided that in regard to past burials the Commission ''* * * would continue to require an analysis of site-specific overall impacts and costs in deciding whether or not exhumation of previous buried waste is necessary for specific sites. In addition, the general exemption provisions of 10 CFR part 20 are available to consider unique past burials on a case-by-case basis.'' The NDA contains significant amounts of buried radioactive material that was previously authorized under older provisions of part 20. This material will require appropriate evaluation as part of site license termination.

Environmental Analysis

An EIS is not needed at this step of the process of prescribing the LTR because the Commission is not establishing a new requirement for the site. This site is licensed to NYSERDA and, therefore, is already subject to the LTR by operation of the Commission's regulations. DOE in essence is acting as a surrogate for NYSERDA . The environmental impacts of applying the LTR to NRC licensees were evaluated in the Generic Environmental Impact Statement (GEIS), NUREG–1496, that supported the LTR. In promulgating the LTR, the Commission stated, in Section VI of the ''Statement for Considerations'' that it will conduct an environmental review to ''determine if the generic analysis encompasses the range of environmental impacts at the particular site.'' The Commission further stated that it ''will conduct an independent environmental review for each site-specific decommissioning decision where land use restrictions or institutional controls are relied upon by the licensee or where alternative criteria are proposed'' as it recognized that the environmental impacts for these cases cannot be analyzed on a generic basis. The environmental impacts from the application of the criteria will need to be evaluated for the various alternative approaches being considered in the process before NRC decides whether to accept the preferred alternative for meeting the criteria permitted by the LTR. NRC intends to rely on the DOE/NYSERDA EIS for this purpose.

For NEPA purposes, DOE is considered the lead Federal agency. NRC, in view of its responsibilities under the WVDP Act, is considered a cooperating agency for this EIS and is participating in the development of the DOE/NYSERDA EIS. NRC does not anticipate the need to prepare its own duplicative EIS, since it can consider the environmental impacts described in the DOE/NYSERDA EIS in approving the particular decommissioning criteria for the WVDP under the LTR. Under this arrangement, if NRC is satisfied with the DOE/NYSERDA EIS, this EIS will fulfill the NEPA responsibilities for NRC under the WVDP Act. If NRC is not satisfied with the final DOE/NYSERDA EIS, then NRC will adopt as much of it as possible and modify or supplement it as necessary. In such a situation, NRC would publish its own draft EIS document for public review and comment before finalizing it. Once finalized, NRC's West Valley NEPA responsibilities would be fulfilled under the WVDP Act.

The WVDP Act does not address license termination for the site. License termination of the NRC license for the site, or portions thereof, is conducted (if license termination is possible) under the AEA. If NYSERDA pursues either full or partial license termination of the NRC license, at that time NRC will need to conduct an environmental review to determine if an EIS is necessary to support license termination.

Availability of Documents

NRC's final policy statement on decommissioning criteria for West Valley is also available at NRC's Public Electronic Reading Room link (*http://www.nrc.gov/NRC/ADAMS/ index.html*) on NRC's home page (*http://www.nrc.gov*). Copies of documents cited in this section are available for inspection and/or reproduction for a fee in the NRC Public Document Room, 11555 Rockville Pike, Room O–1F21, Rockville, MD 20852. The NRC Public Document Room is open from 7:45 a.m. to 4:15 p.m., Monday through Friday, except on Federal holidays. Reference service and access to documents may also be requested by telephone (301–415–4737 or 800–397–4209), between 8:30 a.m. and 4:15 p.m.; or by e-mail (*PDR@nrc.gov*); fax (301–415–3548); or a letter (NRC Public Document Room, Mailstop O–1F13, Washington, DC 20555–0001). In addition, copies of: (1) SECY–98–251, ''Decommissioning Criteria for West Valley;'' (2) the transcript of the public meeting held January 12, 1999; (3) the Commission's SRM of January 26, 1999, concerning the January 12, 1999, public meeting on SECY–98–251; (4) SECY–99–057, ''Supplement to SECY–98–251, 'Decommissioning Criteria for West Valley;' '' (5) the Commission's vote sheets on SECY–98–251 and SECY–99–057; (6) the Commission's SRM of June 3, 1999, on SECY–98–251 and SECY–99–057; (7) the draft policy statement issued December 3, 1999; (8) the transcript of the public meeting held January 5, 2000; and (9) the public comments on the draft policy statement can be obtained electronically on NRC's home page at the Commission's Activities link (*http://www.nrc.gov/NRC/COMMISSION/activities.html*).

Dated at Rockville, Maryland, this 25th day of January, 2002.

For the Nuclear Regulatory Commission.

Annette Vietti-Cook,

Secretary of the Commission.

[FR Doc. 02–2373 Filed 1–31–02; 8:45 am]

BILLING CODE 7590–01–P

NUCLEAR REGULATORY COMMISSION

[Docket Nos. 50–250 and 50–251]

Florida Power and Light Company Turkey Point Plant, Units 3 and 4 Notice of Availability of the Final Supplement 5 to the Generic Environmental Impact Statement Regarding License Renewal for the Turkey Point Plant, Units 3 and 4

Notice is hereby given that the U. S. Nuclear Regulatory Commission (NRC) has published a final plant-specific Supplement 5 to the Generic Environmental Impact Statement (GEIS), NUREG–1437, regarding the renewal of operating licenses DPR–31 and DPR–41 for the Turkey Point Plant, Units 3 and 4, for an additional 20 years of operation. The Turkey Point Plant units are operated by Florida Power and Light Company (FPL). Turkey Point Plant is located in Dade County, Florida. Possible alternatives to the proposed action (license renewal) include no action and reasonable alternative methods of power generation.

In Section 9.3 of the report:

The staff recommends that the Commission determine that the adverse environmental impacts of license renewal for Turkey Point Units 3 and 4 are not so great that preserving the option of license renewal for energy planning decisionmakers would be unreasonable. This recommendation is based on (1) the analysis and findings in the Generic Environmental Impact Statement for License Renewal of Nuclear Power Plants, NUREG–1437; (2) the ER [Environmental Report] submitted by FPL; (3) consultation with other Federal, State, and local agencies; (4) the staff's own independent review; and

(5) the staff's consideration of public comments.

The final Supplement 5 to the GEIS is available electronically for public inspection in the NRC Public Document Room located at One White Flint North, 11555 Rockville Pike (first floor), Rockville, Maryland, or from the Publicly Available Records (PARS) component of NRC's document management system (ADAMS). ADAMS is accessible from the NRC Web site at *http://www.nrc.gov/* (the Public Electronic Reading Room).

FOR FURTHER INFORMATION CONTACT: Dr. Michael T. Masnik, License Renewal and Environmental Impacts Program, Division of Regulatory Improvement Programs, U.S. Nuclear Regulatory Commission, Washington, DC 20555. Dr. Masnik may be contacted at (301) 415–1191 or by writing to: Michael T. Masnik, U. S. Nuclear Regulatory Commission, MS O–12D2, Washington, DC 20555.

Dated at Rockville, Maryland, this *11th* day of January 2002.

For the Nuclear Regulatory Commission.

David B. Matthews,

Director, Division of Regulatory Improvement Programs, Office of Nuclear Reactor Regulation.

[FR Doc. 02–2497 Filed 1–31–02; 8:45 am]

BILLING CODE 7590–01–P

NUCLEAR REGULATORY COMMISSION

Advisory Committee on the Medical Uses of Isotopes: Meeting Notice

AGENCY: U.S. Nuclear Regulatory Commission.

ACTION: Notice of meeting.

SUMMARY: The U.S. Nuclear Regulatory Commission will convene a meeting of the Advisory Committee on the Medical Uses of Isotopes (ACMUI) on February 19–20, 2002. The meeting will take place at the address provided below. The topics of discussion will relate to the status of the revised 10 CFR part 35, Medical Use of Byproduct Material.

DATES: ACMUI will hold a public meeting on Tuesday, February 19, 2002, from 11 a.m. to 12:30 p.m. From 2 p.m. to 4 p.m. on February 19, the ACMUI will meet with the Commission in the Commissioners' conference room. On Wednesday, February 20, 2002, the ACMUI will continue its public meeting from 8 a.m. to 5 p.m.

Address for Commission Briefing: U.S. Nuclear Regulatory Commission, One White Flint North Building, Commissioners' Conference Room 1G16, 11555 Rockville Pike, Rockville, MD, 20852–2738.

Address for Public Meeting: U.S. Nuclear Regulatory Commission, Two White Flint North Building, Conference Room T2B3, 11545 Rockville Pike, Rockville, MD 20852–2738.

FOR FURTHER INFORMATION CONTACT: Angela R. Williamson, telephone (301) 415–5030; e-mail *arw@nrc.gov* of the Office of Nuclear Material Safety and Safeguards, U.S. Nuclear Regulatory Commission, Washington, DC 20555–0001.

Conduct of the Meeting

Manuel D. Cerqueira, M.D., will chair the meeting. Dr. Cerqueira will conduct the meeting in a manner that will facilitate the orderly conduct of business. The following procedures apply to public participation in the meeting:

1. Persons who wish to provide a written statement should submit a reproducible copy to Angela Williamson, U.S. Nuclear Regulatory Commission, Two White Flint North, Mail Stop T8F5, 11545 Rockville Pike, Rockville, MD 20852–2738. Submittals must be postmarked by February 11, 2002, and must pertain to the topics on the agenda for the meeting.

2. Questions from members of the public will be permitted during the meeting, at the discretion of the Chairman.

3. The transcript and written comments will be available for inspection on NRC's Web site, *www.nrc.gov,* and at the NRC Public Document Room, 11555 Rockville Pike, Rockville, MD 20852–2738, telephone (800) 397–4209, on or about April 22, 2002. Minutes of the meeting will be available on or about April 15, 2002.

This meeting will be held in accordance with the Atomic Energy Act of 1954, as amended (primarily Section 161a); the Federal Advisory Committee Act (5 U.S.C. App); and the Commission's regulations in Title 10, *U.S. Code of Federal Regulations,* Part 7.

Dated: January 28, 2002.

Andrew L. Bates,

Advisory Committee Management Officer.

[FR Doc. 02–2501 Filed 1–31–02; 8:45 am]

BILLING CODE 7590–01–P

SECURITIES AND EXCHANGE COMMISSION

[Release No. IC–25402; 812–12200]

Memorial Funds and Memorial Investment Advisors, Inc.; Notice of Application

January 25, 2002.

AGENCY: Securities and Exchange Commission (''Commission'').

ACTION: Notice of an application for an order under section 6(c) of the Investment Company Act of 1940 (''Act'') for an exemption from section 15(a) of the Act and rule 18f–2 under the Act, as well as from certain disclosure requirements.

SUMMARY OF APPLICATION: Memorial Funds (the ''Trust'') and Memorial Investment Advisors, Inc. (the ''Adviser'') (together, ''Applicants'') request an order that would permit applicants to enter into and materially amend subadvisory agreements without shareholder approval and grant relief from certain disclosure requirements.

FILING DATES: The application was filed on July 24, 2000, and amended on January 22, 2002.

HEARING OR NOTIFICATION OF HEARING: An order granting the requested relief will be issued unless the Commission orders a hearing. Interested persons may request a hearing by writing to the Commission's Secretary and serving applicants with a copy of the request, personally or by mail. Hearing requests should be received by the Commission by 5:30 p.m. on February 19, 2002, and should be accompanied by proof of service on the applicants, in the form of an affidavit, or, for lawyers, a certificate of service. Hearing requests should state the nature of the writer's interest, the reason for the request, and the issues contested. Persons who wish to be notified of a hearing may request notification by writing to the Commission's Secretary.

ADDRESSES: Secretary, Commission, 450 Fifth Street, NW., Washington, DC 20549–0609; Applicants, c/o Anthony C.J. Nuland, Esq., Seward & Kissel, LLP, 1200 G Street NW., Washington, DC 20005.

FOR FURTHER INFORMATION CONTACT: Lidian Pereira, Senior Counsel, at (202) 942–0524, or Mary Kay Frech, Branch Chief, at (202) 942–0564, Division of Investment Management, Office of Investment Company Regulation.

SUPPLEMENTARY INFORMATION: The following is a summary of the application. The complete application may be obtained for a fee at the

Commission's Public Reference Branch, 450 Fifth Street, NW., Washington, DC 20549–0102, telephone 202–942–8090.

Applicants' Representations

1. The Trust, a Delaware business trust, is registered under the Act as an open-end management investment company. The Trust currently is composed of four series (each a ''Fund,'' collectively, the ''Funds'').[1] Each Fund has its own investment objectives, policies and restrictions.

2. The Adviser, registered under the Investment Advisers Act of 1940 (''Advisers Act''), serves as investment adviser to the Funds pursuant to an investment advisory agreement with the Trust (''Advisory Agreement''), which was approved by the board of trustees of the Trust (''Board''), including a majority of the trustees who are not ''interested persons,'' as defined in section 2(a)(19) of the Act (''Independent Trustees''), and by each Fund's shareholders. Under the terms of the Advisory Agreement, the Adviser provides investment advisory services for each Fund and may hire one or more subadvisers (''Subadvisers'') to exercise day-to-day investment discretion over the assets of the Fund pursuant to separate investment advisory agreements (''Subadvisory Agreements''). All current and future Subadvisers will be registered under the Advisers Act. Subadvisers are recommended to the Board by the Adviser and selected and approved by the Board, including a majority of the Independent Trustees. The Adviser compensates each Subadviser out of the fees paid to the Adviser by the applicable Fund.

3. The Adviser monitors the Funds and the Subadvisers and makes recommendations to the Board regarding allocation, and reallocation, of assets between Subadvisers and is responsible for recommending the hiring, termination and replacement of Subadvisers. The Adviser recommends Subadvisers based on a number of factors used to evaluate their skills in managing assets pursuant to particular investment objectives.

4. Applicants request relief to permit the Adviser, subject to the oversight of the Board, to enter into and materially amend Subadvisory Agreements without shareholder approval. The requested relief will not extend to a Subadviser that is an affiliated person, as defined in section 2(a)(3) of the Act, of the Trust or the Adviser, other than by reason of serving as a Subadviser to one or more of the Funds (an ''Affiliated Subadviser'').

5. Applicants also request an exemption from the various disclosure provisions described below that may require each Fund to disclose fees paid by the Adviser to the Subadvisers. The Trust will disclose for each Fund (both as a dollar amount and as a percentage of a Fund's net assets) (a) aggregate fees paid to the Adviser and Affiliated Subadvisers; and (b) aggregate fees paid to Subadvisers other than Affiliated Subadvisers (''Aggregate Fee Disclosure''). For any Fund that employs an Affiliated Subadviser, the Fund will provide separate disclosure of any subadvisory fees paid to the Affiliated Subadviser.

Applicants' Legal Analysis

1. Section 15(a) of the Act provides, in relevant part, that it is unlawful for any person to act as an investment adviser to a registered investment company except under a written contract that has been approved by a majority of the investment company's outstanding voting securities. Rule 18f–2 under the Act provides that each series or class of stock in a series company affected by a matter must approve the matter if the Act requires shareholder approval.

2. Form N–1A is the registration statement used by open-end investment companies. Item 15(a)(3) of Form N–1A requires disclosure of the method and amount of the investment adviser's compensation.

3. Rule 20a–1 under the Act requires proxies solicited with respect to an investment company to comply with Schedule 14A under the Securities Exchange Act of 1934 (''Exchange Act''). Items 22(c)(1)(ii), 22(c)(1)(iii), 22(c)(8) and 22(c)(9) of Schedule 14A, taken together, require a proxy statement for a shareholder meeting at which the advisory contract will be voted upon to include the ''rate of compensation of the investment adviser,'' the ''aggregate amount of the investment adviser's fees,'' a description of ''the terms of the contract to be acted upon,'' and, if a change in the advisory fee is proposed, the existing and proposed fees and the difference between the two fees.

4. Form N–SAR is the semi-annual report filed with the Commission by registered investment companies. Item 48 of Form N–SAR requires investment companies to disclose the rate schedule for fees paid to their investment advisers, including the Subadvisers.

5. Regulation S–X sets forth the requirements for financial statements required to be included as part of investment company registration statements and shareholder reports filed with the Commission. Sections 6–07(2)(a), (b), and (c) of Regulation S–X require that investment companies include in their financial statements information about investment advisory fees.

6. Section 6(c) of the Act provides that the Commission may exempt any person, security, or transaction or any class or classes of persons, securities, or transactions from any provision of the Act, or from any rule thereunder, if such exemption is necessary or appropriate in the public interest and consistent with the protection of investors and the purposes fairly intended by the policy and provisions of the Act. Applicants believe that their requested relief meets this standard for the reasons discussed below.

7. Applicants assert that by investing in a Fund, shareholders, in effect, will hire the Adviser to manage the Fund's assets by selecting and monitoring Subadvisers rather than by hiring its own employees to manage assets directly. Applicants state that investors will purchase Fund shares to gain access to the Adviser's expertise in overseeing Subadvisers. Applicants further assert that the requested relief will reduce Fund expenses and permit the Funds to operate more efficiently. Applicants note that the Advisory Agreement will remain subject to the shareholder approval requirements of section 15(a) of the Act and rule 18f–2 under the Act.

8. Applicants assert that some Subadvisers charge their customers for advisory services according to a ''posted'' rate schedule. Applicants state that while Subadvisers are willing to negotiate fees lower than those posted in the schedule, particularly with large institutional clients, they are reluctant to do so where the fees are disclosed to other prospective and existing customers. Applicants submit that the relief will encourage Subadvisers to negotiate lower advisory fees with the Adviser, the benefits of which are likely to be passed on to shareholders.

[1] Applicants request that any relief granted pursuant to the application also apply to future series of the Trust, and any other registered open-end management investment company and its series that: (a) Are advised by the Adviser or any entity controlling, controlled by, or under common control with the Adviser; (b) use the multi-manager structure described in the application; and (c) comply with the terms and conditions in the application (''Future Funds,'' included in the term ''Funds''). All entities that currently intend to rely on the requested relief are named as applicants. If the name of any Fund contains the name of a Subadviser, it will be preceded by the name of the Adviser.

Applicants' Conditions

Applicants agree that any order granting the requested relief will be subject to the following conditions:

1. Before a Fund may rely on the requested order, the operation of the Fund in the manner described in the application will be approved by a majority of the outstanding voting securities of the Fund, as defined in the Act, or in the case of a Fund whose public shareholders purchased shares on the basis of a prospectus containing the disclosure contemplated by condition 2 below, by the initial shareholders prior to offering shares of the Fund to the public.

2. Any Fund relying on the requested relief will disclose in its prospectus the existence, substance, and effect of any order granted pursuant to the application. In addition, each Fund relying on the requested order will hold itself out to the public as employing the management structure described in the application. The prospectus will prominently disclose that the Adviser has the ultimate responsibility (subject to oversight by the Board) to oversee the Subadvisers and recommend their hiring, termination, and replacement.

3. Within 90 days of the hiring of any new Subadviser, shareholders of the relevant Fund will be furnished all information about the Subadviser that would be contained in a proxy statement, except as modified by the order to permit Aggregate Fee Disclosure. This information will include Aggregate Fee Disclosure and any change in such disclosure caused by the addition of a new Subadviser. The Adviser will meet this condition by providing shareholders, within 90 days of the hiring of a Subadviser, an information statement meeting the requirements of Regulation 14C, Schedule 14C and Item 22 of Schedule 14A under the Exchange Act, except as modified by the order to permit Aggregate Fee Disclosure.

4. The Adviser will not enter into a Subadvisory Agreement with any Affiliated Subadviser without such agreement, including the compensation to be paid thereunder, being approved by the shareholders of the applicable Fund.

5. At all times, a majority of the Trust's Board will be Independent Trustees, and the nomination of new or additional Independent Trustees will be at the discretion of the then existing Independent Trustees.

6. When a Subadviser change is proposed for a Fund with an Affiliated Subadviser, the Trust's Board, including a majority of the Independent Trustees, will make a separate finding, reflected in the Trust's Board minutes, that the change is in the best interests of the Fund and its shareholders and does not involve a conflict of interest from which the Adviser or the Affiliated Subadviser derives an inappropriate advantage.

7. Independent counsel knowledgeable about the Act and the duties of Independent Trustees will be engaged to represent the Trust's Independent Trustees. The selection of such counsel will be within the discretion of the Independent Trustees.

8. The Adviser will provide the Trust's Board, no less frequently than quarterly, with information about the Adviser's profitability for each Fund relying on the relief requested in the application. The information will reflect the impact on profitability of the hiring or termination of Subadvisers during the applicable quarter.

9. Whenever a Subadviser to a particular Fund is hired or terminated, the Adviser will provide the Trust's Board with information showing the expected impact on the Adviser's profitability.

10. The Adviser will provide general management services to the Trust and the Funds, including overall supervisory responsibility for the general management and investment of each Fund's securities portfolio, and, subject to review and approval by the Board, will (a) set each Fund's overall investment strategies, (b) evaluate, select and recommend Subadvisers to manage all or a part of a Fund's assets, (c) allocate and, when appropriate, reallocate a Fund's assets among multiple Subadvisers, (d) monitor and evaluate the performance of Subadvisers, and (e) implement procedures reasonably designed to ensure that the Subadvisers comply with the relevant Fund's investment objective, policies and restrictions.

11. No trustee or officer of the Trust or director or officer of the Adviser will own directly or indirectly (other than through a pooled investment vehicle that is not controlled by any such person) any interest in a Subadviser, except for: (a) Ownership of interests in the Adviser or any entity that controls, is controlled by, or is under common control with the Adviser; or (b) ownership of less than 1% of the outstanding securities of any class of equity or debt of a publicly traded company that is either a Subadviser or an entity that controls, is controlled by or is under common control with a Subadviser.

12. Each Fund will disclose in its registration statement the respective Aggregate Fee Disclosure.

For the Commission, by the Division of Investment Management, under delegated authority.

Margaret H. McFarland,

Deputy Secretary.

[FR Doc. 02–2458 Filed 1–31–02; 8:45 am]

BILLING CODE 8010–01–U

SECURITIES AND EXCHANGE COMMISSION

[Release No. 34–45333: File No. SR–AMEX–2001–56]

Self-Regulatory Organizations; Notice of Filing of Proposed Rule Change and Amendment No. 1 Thereto by the American Stock Exchange LLC Relating to the Recording of Images, Sound or Data on the Trading Floor

January 25, 2002.

Pursuant to section 19(b)(1) of the Securities Exchange Act of 1934 (''Act''),[1] and rule 19b–4 thereunder,[2] notice is hereby given that on August 1, 2001, the American Stock Exchange LLC (''Amex'' or ''Exchange'') filed with the Securities and Exchange Commission (''Commission'') the proposed rule change as described in Items I, II, and III below, which Items have been prepared by the Exchange. The Amex filed an amendment to its proposal on January 15, 2002.[3] The Commission is publishing this notice to solicit comments on the proposed rule change from interested persons.

1. Self-Regulatory Organization's Statement of the Terms of Substance of the Proposed Rule Change

The Exchange proposes to amend Article II, Section 3 of the Amex Constitution, to control the recording of images, sound or data on the Trading Floor. The text of the proposed rule change is available at the principal offices of the Amex and at the Commission.

II. Self-Regulatory Organization's Statement of the Purpose of, and Statutory Basis for, the Proposed Rule Change

In its filing with the Commission, the Exchange included statements concerning the purpose of and basis for the proposed rule change and discussed

[1] 15 U.S.C. 78s(b)(1).

[2] 17 CFR 240.19b–4.

[3] *See* letter from Geraldine Brindisi, Vice President and Corporate Secretary, Amex, to Nancy Sanow, Assistant Director, Division of Market Regulation, Commission (January 14, 2002) (''Amendment No. 1''). In Amendment No. 1, the Amex limited its proposed rule language to recording of images, sound or data ''on the Trading Floor'' (rather than ''on the premises of the Exchange.'')

any comments it received on the proposed rule change. The test of these statements may be examined at the places specified in Item IV below. The Exchange has prepared summaries, set forth in Sections A, B, and C below, of the most significant aspects of such statements.

A. Self-Regulatory Organization's Statement of the Purpose of, and Statutory Basis for, the Proposed Rule Change

1. Purpose

Images and sounds from the Trading Floor are a powerful symbol of the Amex and a valuable asset. The recording of images, sound or data on the Trading Floor also may disrupt the conduct of business. Thus, for example, when recording is allowed on the Trading Floor (as in the Media Booth), the Exchange takes precautions to ensure that trading is not disturbed.

To protect the Amex, the Exchange is proposing that any person that wishes to record images, sound or data on the Trading Floor must first receive written permission from the Exchange to do so. Such permission may be granted on such terms and conditions as the Exchange deems appropriate. The Exchange believes that the proposed rule change is desirable to protect both the Exchange's rights and its interests in ensuring the orderly conduct of business.

2. Statutory Basis

The Exchange believes that the proposed rule change is consistent with section 6(b) of the Act,[4] in general, and section 6(b)(5) of the Act,[5] in particular, which requires, among other things, that the rules of an exchange be designed to prevent fraudulent and manipulative acts and practices, to promote just and equitable principles of trade, to remove impediments to and perfect the mechanism of a free and open market and a national market system, and, in general, to protect investors and the public interest; and are not designed to permit unfair discrimination between customers, issuers, brokers, or dealers.

B. Self-Regulatory Organization's Statement on Burden on Competition

The Exchange does not believe that the proposed rule change will impose any burden on competition that is not necessary or appropriate in furtherance of the purpose of the Act.

[4] 15 U.S.C. 78f(b).

[5] 15 U.S.C. 78f(b)(5).

C. Self-Regulatory Organization's Statement on Comments on the Proposed Rule Change Received From Members, Participants or Others

The Exchange has neither solicited nor received written comments on the proposed rule change.

III. Date of Effectiveness of the Proposed Rule Change and Timing for Commission Action

Within 35 days of the date of publication of this notice in the **Federal Register** or within such longer period (i) as the Commission may designate up to 90 days of such date if it finds such longer period to be appropriate and publishes its reasons for so finding or (ii) as to which the Exchange consents, the Commission will:

(A) By order approve such proposed rule change, or

(B) Institute proceedings to determine whether the proposed rule change should be disapproved.

IV. Solicitation of Comments

Interested persons are invited to submit written data, views, and arguments concerning the foregoing, including whether the proposed rule change is consistent with the Act. Persons making written submissions should file six copies thereof with the Secretary, Securities and Exchange Commission, 450 Fifth Street, NW., Washington, DC 20549–0609. Copies of the submission, all subsequent amendments, all written statements with respect to the proposed rule change that are filed with the Commission, and all written communications relating to the proposed rule change between the Commission and any person, other than those that may be withheld from the public in accordance with the provisions of 5 U.S.C. 552, will be available for inspection and copying in the Commission's Public Reference Room. Copies of such filing will also be available for inspection and copying at the principal office of the Exchange. All submissions should refer to File No. SR–AMEX–2001–56 and should be submitted by February 22, 2002.

For the Commission, by the Division of Market Regulation, pursuant to delegated authority.[6]

Margaret H. McFarland,

Deputy Secretary.

[FR Doc. 02–2459 Filed 1–31–02; 8:45 am]

BILLING CODE 8010–01–M

[6] 17 CFR 200.30–3(a)(12).

SECURITIES AND EXCHANGE COMMISSION

[Release No. 34–45341; File No. SR–CBOE–00–42]

Self-Regulatory Organizations; Order Approving Proposed Rule Change and Notice of Filing and Order Granting Accelerated Approval of Amendment No. 2 to the Proposed Rule Change by the Chicago Board Options Exchange, Inc. Eliminating the Obligation of Designated Primary Market Makers to Accord Priority to Non-Public Customer Orders

January 25, 2002.

I. Introduction

On August 29, 2000, the Chicago Board Options Exchange, Inc. (''CBOE'' or ''Exchange'') submitted to the Securities Exchange Commission (''SEC'' or ''Commission''), pursuant to Section 19(b)(1) of the Securities Exchange Act of 1934 (''Act'')[1] and Rule 19b–4 thereunder,[2] a proposed rule change to eliminate the obligation of Designated Primary Market Makers (''DPMs'') to accord priority to non-public customers over the DPMs' principal transactions. The proposed rule change was published for comment in the **Federal Register** on December 4, 2001.[3] The Commission received no comments on the proposal. On January 8, 2002, the CBOE submitted Amendment No. 1 to the proposed rule change.[4] On January 16, 2002, the CBOE submitted Amendment No. 2 to the proposed rule change.[5] This order approves the proposal, as amended by Amendment No. 2. The Commission also solicits comment on Amendment No. 2 from interested persons.

[1] 15 U.S.C. 78s(b)(1).

[2] 17 CFR 240.19b–4.

[3] *See* Securities Exchange Act Release No. 45013 (November 26, 2001), 66 FR 63083.

[4] *See* letter from Steve Youhn, Legal Department, CBOE to Kelly Riley, Senior Special Counsel, Division of Market Rgulation (''Division''), Commission, dated January 7, 2002 (''Amendment No. 1''. In Amendment No. 1, the CBOE proposed a definition of ''public customer orders.''

[5] *See* letter from Steve Youhn, Legal Department, CBOE to Kelly Riley, Seniro Special Counsel, Division, Commission, dated January 14, 2002 (''Amendment No. 2''). In Amendment NO. 2 CBOE proposed to define the term ''public customer'' in proposed Interpretation .03 of CBOE Rule 8.85. Amendment No. 2 supersedes and replaces Amendment No. 1 in its entirety. Telephone conversation between Steven Youhn, Legal Division, CBOE, and Kelly Riley, Senior Special Counsel, Division, Commission, on January 14, 2002. On January 18, 2002, CBOE consented to an extension of time for Commission action until January 25, 2002. *See* letter from Steve Youhn, Legal Department, CBOE, to Kelly Riley, Senior Special Counsel, Division, Commission, dated January 18, 2002.

II. Description of the Proposal

The CBOE proposes to amend CBOE Rule 8.85 (DPM Obligations) regarding the obligations of DPMs to represent orders. Currently, CBOE Rule 8.85(b)(iii) requires a DPM to accord priority to any order, that the DPM represents as agent over the DPM's principal transactions, unless the customer who placed the order has consented to not being accorded such priority. The CBOE proposes to amend CBOE Rule 8.85(b)(iii) to require DPMs to accord priority only to public customer orders. In Amendment No. 2 the CBOE proposes to add Interpretation .03 to CBOE Rule 8.85 to define a public customer order as not including any order in which a member, non-member participant in a joint venture with a member, or any non-member broker dealer has an interest. Accordingly, CBOE proposes to exclude these orders from a DPM's obligation under Exchange rules to accord priority.

III. Commission Findings and Order Granting Accelerated Approval of the Proposed Rule Change

After careful review, the Commission finds that the proposed rule change, as amended, is consistent with the requirements of the Act and the rules and regulations thereunder applicable to a national securities exchange.[6] The Commission's approval of CBOE's proposal to amend its Rule 8.85 to eliminate a DPM's obligation, *pursuant to CBOE rules,* to accord priority under all circumstances to certain orders is based solely on its determination that this proposed rule change is consistent with the Act and the rules and regulations thereunder applicable to a *national securities exchange.* The Commission is making no determination as to whether a DPM's failure to accord priority to non-public customer orders, when the DPM is acting as an agent, is consistent with the federal securities laws or any other applicable law. Accordingly, the Commission's approval of CBOE's proposal does not affect a DPM's fiduciary obligations under federal securities laws or agency law principles when it acts as an agent.[7]

Currently, by requiring DPMs to accord priority to all customer orders pursuant to its Rule 8.85, unless the customer who placed the order has consented to not being accorded such priority, the CBOE creates an obligation on DPMs under Exchange rules in addition to the DPM's obligations under Federal securities laws and agency law. Accordingly, the result of CBOE's proposal is to no longer make a DPM's failure to accord priority to non-public customer orders for which it acts as agent a CBOE rule violation. The CBOE's proposal, however, does not affect a DPM's obligations to orders for which it acts as agent under Federal securities laws or any other applicable laws.

The Commission found in its Manning Decision that broker-dealers owe a fiduciary duty to their limit order customers not to trade ahead of these orders unless the customer knows of the firm's limit order policy.[8] After the Commission issued its Manning Decision, the NASD filed a proposed rule change stating that a member firm would not be deemed to violate NASD Rules of Fair Practice if it provides to customers a statement setting forth the circumstances in which the firm accepts limit orders and the policies and procedures the firm follows in handling these orders.[9] As part of this filing, the NASD proposed model disclosure language to be used by firms whose policy was not to grant priority to customer limit orders over the member's own proprietary trading.

This proposal was never approved by the Commission and was withdrawn by the NASD at the time it submitted a proposed rule change to prohibit member firms from trading ahead of their customers' limit orders in their market making capacity.[10] In approving this subsequent NASD proposal, the Commission expressed concern that the prohibition did not extend to trading ahead of limit orders of other firms' customers that had been sent to the market maker for execution.[11] Shortly thereafter, the Commission proposed its own rule to prohibit any market maker in Nasdaq National Market securities from trading ahead of the orders of other firms' customers sent to it for execution.[12]

Shortly after the Commission's publication of its proposal, the NASD filed a proposed rule change to prohibit its member firms from trading ahead of the orders of other firms' customers, which the Commission approved.[13] In its approval order of Manning II, the Commission also noted that:

''In a typical agency relationship, disclosure often is relied upon as an adequate means of resolving a conflict of interest between an agent and its principal. *Cite omitted.* Investors enjoy greater protection under the federal securities laws, however, than that afforded by common law; a general common law remedy of disclosure does not always suffice.[14] A stricter duty may be imposed where, as here, the principles are investors and the agents control access to the trading market.''

While the NASD's limit order protections only extend to non-broker-dealer customers, the Commission questioned why the provisions of the rule should not be extended to limit orders placed by other broker-dealers, including options specialists and registered options traders. Further, the Commission specifically noted that it expected the NASD to consider extending the scope of limit order protections to orders of options specialists and market makers.[15]

More recently, the Commission approved a New York Stock Exchange (''NYSE'') proposal to prohibit NYSE members from trading along with their customers except in limited circumstances.[16] NYSE Rule 92 significantly restricts NYSE members'

[6] In approving this proposal, the Commission has considered the proposed rule's impact on efficiency, competition, and capital formation. 15 U.S.C. 78c(f).

[7] Pursuant to agency law principles, a DPM that acts as agent for any customer has an obligation to act solely for the benefit of the customer in all matters connected with the customer's order, *see* Restatement (Second) of Agency § 387 (1958), and not compete with the customer concerning the customer's order unless the customer understands its agent is to compete, *see* Restatement (Second) of Agency § 393 (1958). *See also In re E.F. Hutton & Company,* Securities Exchange Act Release No. 25887 (July 6, 1988) (''Manning Decision''). In its opinion, the Commission noted that ''absent disclosure and a contrary agreement a fiduciary cannot compete with his beneficiary with respect to the subject matter of their relationship * * *''.

[8] *See supra* note 7.

[9] *See* Securities Exchange Act Release No. 26824 (May 15, 1989), 54 FR 22046 (May 22, 1989).

[10] *See* Securities Exchange Act Release No. 33697 (March 1, 1994), 59 FR 45 (March 8, 1994) (''Manning I'').

[11] *See* Securities Exchange Act Release No. 34279 (June 29, 1994), 59 FR 34883 (July 7, 1994). *See also* Division of Market Regulation, SEC, Market 2000: An Examination of Current Equity Market Developments, V–8 (1994).

[12] *See* Securities Exchange Act Release No. 34753 (September 29, 1994), 59 FR 50867 (October 6, 1994). The Commission's proposal was never adopted.

[13] *See* Securities Exchange Act Release No. 35751 (May 22, 1995), 60 FR 27997 (May 26, 1995) (''Manning II'').

[14] *See e.g., Herman & MacLean v. Huddleston,* 459 U.S. 375, 389 (1983) (''An important purpose of the federal securities statutes was to rectify perceived deficiencies in the available common law protection by establishing higher standards of conduct in the securities industry.'').

[15] *See* Manning II, *supra* note 12.

[16] *See* Securities Exchange Act Release No. 44139 (March 30, 2001), 66 FR 18339 (April 6, 2001). Specifically, members are only permitted to enter certain types of proprietary orders, such as liquidating positions in proprietary facilitation accounts, bona fide hedges, bona fide arbitrages and risk arbitrages, while representing a customer's order that could be executed at the same price, so long as the order is not for an individual investor and the customer has given express permission, which must include an understanding of the relative price and size of the allocated execution reports.

ability to enter orders to buy or sell NYSE-listed securities for any account in which such member is interested, if the person responsible for the entry of such order has knowledge of any particular unexecuted customer order to buy or sell the same security that could be executed at the same price. In its approval order, the Commission noted that proprietary trading exceptions ''did not minimize the importance of a broker-dealers' duty to their customers, which requires broker-dealers to place investors' interests before their own. On the contrary,'' the Commission continued, ''member and member organizations remain obligated to consider their customers' interest in every customer transaction.'' [17]

Amendment No. 2

The Commission finds good cause, consistent with Section 19(b)(2) of the Act,[18] to approve Amendment No. 2 to the proposed rule change prior to the thirtieth day after the date of publication of notice of filing thereof in the **Federal Register**. The Commission notes that the notice that was published in the **Federal Register** [19] discussed CBOE's intent to define ''public customer orders.'' Therefore, the CBOE's proposed definition was subject to notice and comment. Accordingly, the Commission believes good cause exists, pursuant to Sections 6(b)(5) and 19(b) of the Act [20] to accelerate approval of Amendment No. 2 to the proposed rule change.

IV. Solicitation of Comments

Interested persons are invited to submit written data, views and arguments concerning Amendment No. 2, including whether it is consistent with the Act. Persons making written submissions should file six copies thereof with the Secretary, Securities and Exchange Commission, 450 Fifth Street, NW, Washington, DC 20549–0609. Copies of the submission, all subsequent amendments, all written statements with respect to the proposed rule change that are filed with the Commission, and all written communications relating to the proposed rule change between the Commission and any person, other than those that may be withheld from the public in accordance with the provisions of 5 U.S.C. 552, will be available for inspection and copying in the Commission's Public Reference Room. Copies of such filing will also be available for inspection and copying at the principal office of the CBOE. All submissions should refer to File No. SR–CBOE–00–42 and should be submitted by February 22, 2002.

V. Conclusion

It is therefore ordered, pursuant to Section 19(b)(2) of the Act,[21] that the proposed rule change (SR–CBOE–00–42) is approved.

For the Commission, by the Division of Market Regulation, pursuant to delegated authority.[22]

Margaret H. McFarland,

Deputy Secretary.

[FR Doc. 02–2489 Filed 1–31–02; 8:45 am]

BILLING CODE 8010–01–P

[17] *See supra* note 16.

[18] 15 U.S.C. 78s(b)(2).

[19] *See supra* note 3.

[20] 15 U.S.C. 78f(b)(5) and 15 U.S.C. 78s(b).

[21] 15 U.S.C. 78s(b)(2).

[22] 17 CFR 200.30–3(a)(12).

SECURITIES AND EXCHANGE COMMISSION

[Release No. 34–45337; File No. SR–ISE–2002–02]

Self-Regulatory Organizations; Notice of Filing and Immediate Effectiveness of Proposed Rule Change by the International Securities Exchange LLC, Relating to an Extension of the Interim Intermarket Linkage Program

January 25, 2002.

Pursuant to section 19(b)(1) of the Securities Exchange Act of 1934 (''Act''),[1] and Rule 19b–4 thereunder,[2] notice is hereby given that on January 16, 2002, the International Securities Exchange LLC (''Exchange'' or ''ISE'') filed with the Securities and Exchange Commission (''Commission'') the proposed rule change as described in Items I, II, and III below, which items have been prepared by the ISE. The Exchange filed this proposal under section 19(b)(3)(A) of the Act,[3] and Rule 19b–4(f)(6) thereunder,[4] which renders the proposal effective upon filing with the Commission. The Commission is publishing this notice to solicit comments on the proposed rule change from interested persons.

I. Self-Regulatory Organization's Statement of the Terms of Substance of the Proposed Rule Change

The ISE is proposing to extend the effective date of its rules providing for an ''interim linkage'' from January 31, 2001 to the earlier of: January 31, 2003; or the complete implementation of the permanent intermarket linkage in the options market.[5]

II. Self-Regulatory Organization's Statement of the Purpose of, and Statutory Basis for, the Proposed Rule Change

In its filing with the Commission, the ISE included statements concerning the purpose of, and basis for, the proposed rule change and discussed any comments it received on the proposed rule change. The text of these statements may be examined at the places specified in Item IV below. The ISE has prepared summaries, set forth in Sections A, B, and C below, of the most significant aspects of such statements.

A. Self-Regulatory Organization's Statement of the Purpose of, and Statutory Basis for, the Proposed Rule Change

1. Purpose

On January 30, 2001, the Commission approved rules of the ISE permitting the ISE to implement an ''interim linkage'' with the other options exchanges.[6] The interim linkage utilizes existing order types to permit market makers on each of the exchanges to send orders to their counterparts on the other exchanges. Interim linkage orders are treated as ''customer'' orders upon receipt on an exchange and, thus, are eligible for automatic execution and similar processing efficiencies.

The options exchanges implemented the interim linkage pending completion of a permanent linkage. That linkage will provide enhanced connectivity between the markets and will have additional rules and mechanisms to help investors achieve best execution of their orders. While work continues on the permanent linkage, the ISE currently does not believe that it will be implemented until late this year. At the same time, the ISE's interim linkage rules will expire on January 31, 2002. ISE believes that the interim linkage has worked well and that it will benefit investors to continue operation of this linkage pending completion of the permanent linkage. The purpose of the proposed rule change is to extend the effectiveness of these rules until the full implementation of the permanent linkage or January 31, 2003, whichever comes first.

[1] 15 U.S.C. 78s(b)(1).

[2] 17 CFR 240.19b–4.

[3] 15 U.S.C. 78s(b)(3)(A).

[4] CFR 240.19b–4(f)(6). The ISE requested that the Commission waive the 30-day operative delay. The ISE provided the Commission with notice of its intention to file this proposal on January 14, 2002.

[5] The Commission approved the Plan for the Purpose of Creating and Operating an Intermarket Options Linkage (''Linkage Plan'') in July 2000. *See* Securities Exchange Act Release No. 43086 (July 28, 2000), 65 FR 48023 (August 4, 2000).

[6] Securities Exchange Act Release No. 43904 (January 30, 2001), 66 FR 9112 (February 6, 2001) (File No. SR–ISE–00–15).

2. Statutory Basis

The Exchange believes that the proposed rule change is consistent with section 6(b) of the Act,[7] in general, and furthers the objectives of section 6(b)(5),[8] in particular, because it should prevent fraudulent and manipulative acts and practices, promote just and equitable principles of trade, foster cooperation and coordination with persons engaged in regulating, clearing, settling, processing information with respect to, and facilitating transaction in securities, remove impediments to and perfect the mechanism for a free and open market and a national market system, and, in general, protect investors and the public interest.

B. Self-Regulatory Organization's Statement on Burden on Competition

The Exchange does not believe that the proposed rule change will impose any burden on competition that is not necessary or appropriate in furtherance of the purposes of the Act.

C. Self-Regulatory Organization's Statement on Comments on the Proposed Rule Change Received From Members, Participants or Others

The Exchange has not solicited, and does not intend to solicit, comments on this proposed rule change. The Exchange has not received any unsolicited written comments from members or other interested parties.

III. Date of Effectiveness of the Proposed Rule Change and Timing for Commission Action

Because the foregoing proposed rule change: (1) Does not significantly affect the protection of investors or the public interest; (2) does not impose any significant burden on competition; (3) does not become operative for 30 days from the date of filing, or such shorter date as the Commission may designate, if consistent with the protection of investors and the public interest; and (4) the Exchange provided the Commission with notice of its intent to file the proposed rule change at least five days prior to the filing date, the proposed rule change has become effective pursuant to section 19(b)(3)(A) of the Act[9] and Rule 19b–4(f)(6)[10] thereunder.

A proposed rule change filed under Rule 19b–4(f)(6)[11] does not become operative prior to 30 days after the date of filing or such shorter time as the Commission may designate if such action is consistent with the protection of investors and the public interest. The ISE has requested, in order to permit the uninterrupted operation of the interim linkage, that the Commission accelerate the implementation of the proposed rule change so that it may take effect prior to the 30 days specified in Rule 19b–4(f)(6)(iii).[12] The Commission finds that the proposed rule change is consistent with the protection of investors and the public interest and, therefore, has determined to make the proposed rule change operative as of the date of this notice.

At any time within 60 days of the filing of the proposed rule change, the Commission may summarily abrogate such rule change if it appears to the Commission that such action is necessary or appropriate in the public interest, for the protection of investors, or otherwise in furtherance of the purposes of the Act.

IV. Solicitation of Comments

Interested persons are invited to submit written data, views and arguments concerning the foregoing, including whether the proposed rule change is consistent with the Act. Persons making written submissions should file six copies thereof with the Secretary, Securities and Exchange Commission, 450 Fifth Street, NW, Washington, DC 20549–0069. Copies of the submission, all subsequent amendments, all written statements with respect to the proposed rule change that are filed with the Commission, and all written communications relating to the proposed rule change between the Commission and any person, other than those that may be withheld from the public in accordance with the provisions of 5 U.S.C. 552, will be available for inspection and copying in the Commission's Public Room. Copies of such filing will also be available for inspection and copying at the principal office of the ISE. All submissions should refer to File Number SR–ISE–2002–02 and should be submitted by February 22, 2002.

For the Commission, by the Division of Market Regulation, pursuant to delegated authority.[13]

Margaret H. McFarland,

Deputy Secretary.

[FR Doc. 02–2488 Filed 1–31–02; 8:45 am]

BILLING CODE 8010–01–U

[7] 15 U.S.C. 78f(b).

[8] 15 U.S.C. 78f(b)(5).

[9] 15 U.S.C. 78s(b)(3)(A).

[10] 17 CFR 240.19b–4(f)(6).

[11] 17 CFR 240.19b–4(f)(6).

[12] 17 CFR 240.19b–4(f)(6)(iii).

[13] 17 CFR 200.30–3(a)(12).

SECURITIES AND EXCHANGE COMMISSION

[Release No. 34–45342; File No. SR–NASD–2001–96]

Self-Regulatory Organizations; National Association of Securities Dealers, Inc.; Notice of Filing and Immediate Effectiveness of Proposed Rule Change To Institute a Quotation Update Charge and Introduce a Mechanism for Sharing Market Data Revenue with NASD Members

January 28, 2002.

Pursuant to section 19(b)(1) of the Securities Exchange Act of 1934 (''Act''), 15 U.S.C. 78s(b)(1), notice is hereby given that on December 27, 2001, the National Association of Securities Dealers, Inc. (''NASD'' or ''Association''), through its subsidiary, The Nasdaq Stock Market, Inc. (''Nasdaq''), filed with the Securities and Exchange Commission (''Commission'') the proposed rule change as described in Items I, II, and III below, which Items have been prepared by Nasdaq. On January 18, 2002, Nasdaq filed Amendment No. 1 to the proposed rule change.[1] The Commission is publishing this notice to solicit comments on the proposed rule change, as amended, from interested persons.

I. Self-Regulatory Organization's Statement of the Terms of Substance of the Proposed Rule Change

This is a proposed rule change, on a pilot basis, to: (1) Institute a quotation update charge and (2) introduce a mechanism for sharing market data revenue with NASD members. Pursuant to section 19(b)(3)(A)(ii) of the Act[2] and Rule 19b–4(f)(2) thereunder,[3] Nasdaq has designated this proposal as one establishing or changing a due, fee, or other charge imposed by a self-regulatory organization, and therefore the proposed rule change is effective upon filing as applied to NASD members. The proposed rule change will become operative on a pilot basis, commencing on February 1, 2002 and ending on October 31, 2002. During the pilot period, Nasdaq will assess the effect of the rule change on market participants and Nasdaq and may file additional changes to the level or

[1] *See* Letter from John M. Yetter, Assistant General Counsel, Nasdaq, to Katherine A. England, Assistant Director, Division of Market Regulation (''Division''), Commission (January 15, 2002) (''Amendment No. 1''). In Amendment No. 1, Nasdaq provided further explanation as to its reasons for charging a quotation update fee.

[2] 15 U.S.C. 78s(b)(3)(A)(ii).

[3] 17 CFR 240.19b–4(f)(2).

structure of its fees. The text of the proposed rule change is set forth below. Proposed new language is *italicized*; proposed deletions are in brackets.

* * * * *

7010. System Services

(a)(*1*) Nasdaq Level 1 Service

The charge to be paid by the subscriber for each terminal receiving Nasdaq Level 1 Service is $20 per month. This Service includes the following data:

[(1)] (*A*) Inside bid/ask quotations calculated for securities listed in The Nasdaq Stock Market and securities quoted in the OTC Bulletin Board (OTCBB) service;

[(2)] *(B)* The individual quotations or indications of interest of broker/dealers utilizing the OTCBB service; and

[(3)] (*C*) Last sale information on securities classified as designated securities in the Rule 4630, 4640, and 4650 Series and securities classified as over-the-counter equity securities in the Rule 6600 Series.

(2) Market Data Revenue Sharing

(A) For a pilot period commencing on February 1, 2002 and lasting until October 31, 2002, NASD members shall receive a market data revenue sharing credit. The total credit shall be calculated in accordance with the following formula:

Credit = (0.60) × (Eligible Revenue) × (Member's Volume Percentage)

(B) Definitions. The following definitions shall apply to this Rule:

(i) ''Eligible Revenue'' shall mean:

a. The portion of the net distributable revenues that Nasdaq, through the NASD, is eligible to receive under the Nasdaq UTP Plan, that is attributed to the Nasdaq Level 1 Service for Eligible Securities, minus

b. The portion of the fee charged to Nasdaq by NASD Regulation, Inc. for regulatory services allocated to the Nasdaq Level 1 Service for Eligible Securities.

(ii) ''Eligible Securities'' shall mean all Nasdaq National Market securities and any other security that meets the definition of ''Eligible Security'' in the Nasdaq UTP Plan.

(iii) ''Member's Volume Percentage'' shall mean the average of:

a. the percentage derived from dividing the total number of trades in Eligible Securities conducted on non-Nasdaq transaction systems that the member reports in accordance with NASD trade reporting rules to the Automated Confirmation Transaction Service (''ACT'') by the total number of trades in Eligible Securities reported to ACT by NASD members, and

b. the percentage derived from dividing the total number of shares represented by trades in Eligible Securities conducted on non-Nasdaq transaction systems that the member reports in accordance with NASD trade reporting rules to ACT by the total number of shares represented by all trades in Eligible Securities reported to ACT by NASD members.

(iv) ''Nasdaq UTP Plan'' shall mean the Joint Self-Regulatory Plan Governing the Collection, Consolidation and Dissemination of Quotation and Transaction Information for Nasdaq-Listed Securities Traded on Exchanges on an Unlisted Trading Privilege Basis

(b)–(h) No change.

(i) Transaction Execution Services

(1)–(4) No change.

(5) Quotation Updates

(A) Except as provided in subparagraph (B), for a pilot period commencing on February 1, 2002 and lasting until October 31, 2002, a fee of $0.01 per quotation update will be charged to NASD members that post quotations in the Nasdaq quotation montage. A ''quotation update'' includes any change to the price or size of a displayed quotation or reserve size.

(B) A quotation update fee will not be charged for a change in the displayed quotation or reserve size that is performed automatically by the Nasdaq National Market Execution System (''NNMS'') when an execution against the quotation occurs (other than a change performed by the ''Autoquote Refresh'' functionality of the NNMS, for which a fee will be assessed).

(j)–(q) No change.

* * * * *

II. Self-Regulatory Organization's Statement of the Purpose of, and Statutory Basis for, the Proposed Rule Change

In its filing with the Commission, Nasdaq included statements concerning the purpose of and basis for the proposed rule change and discussed comments it received on the proposed rule change. The text of these statements may be examined at the places specified in Item IV below. Nasdaq has prepared summaries, set forth below in Sections A, B, and C, of the most significant aspects of such statements.

A. Self-Regulatory Organization's Statement of the Purpose of, and Statutory Basis for, the Proposed Rule Change

On September 28, 2001, Nasdaq filed two proposed rule changes to make modifications to the pricing structure for the Nasdaq National Market Execution System (the ''NNMS'' or ''SuperSOES'') and the SelectNet service.[4] These changes were designed as an interim modification to begin the process of aligning the charges to market participants for using the NNMS and SelectNet more closely with the costs of providing these services and the benefits that they provide to market participants. On October 4, 2001, Nasdaq filed two additional proposed rule changes to increase the per share charge for use of the NNMS from $0.001 to $0.002 and introduce a liquidity provider rebate for NASD members.[5] On October 9, 2001, Nasdaq filed a proposed rule change—SR–NASD–2001–71—to introduce a mechanism for sharing market data revenue with NASD members, make modifications to the fees for use of the NNMS and the liquidity provider rebate to calibrate the level of fees and rebates to the contributions that types of market participants make to the support of the Nasdaq market, and introduce a quotation update charge.[6] On November 29, 2001, Nasdaq withdrew SR–NASD–2001–71 prior to the date scheduled for its implementation, December 1, 2001, to allow Nasdaq to make adjustments to the mechanism for market data revenue sharing and the quotation update

[4] *See* Securities Exchange Act Release No. 44899 (Oct. 2, 2001), 66 FR 51707 (Oct. 10, 2001) (SR–NASD–2001–63) and Securities Exchange Act Release No. 44898 (Oct. 2, 2001), 66 FR 51703 (Oct. 10, 2001) (SR–NASD–2001–64). SR–NASD–2001–63 applied the new fees to NASD members, effective upon filing, and was implemented on October 1, 2001. SR–NASD–2001–64 would apply the new fees to national securities exchanges that trade Nasdaq-listed securities pursuant to grants of unlisted trading privileges (''UTP Exchanges'') following Commission approval.

[5] *See* Securities Exchange Act Release No. 44910 (Oct. 5, 2001), 66 FR 52167 (Oct. 12, 2001) (SR–NASD–2001–67) and Securities Exchange Act Release No. 44914 (Oct. 9, 2001), 66 FR 52649 (Oct. 16, 2001) (SR–NASD–2001–68). SR–NASD–2001–67 applied these pilot changes to NASD members, effective upon filing, for a pilot period from November 1, 2001 through October 31, 2002. SR–NASD–2001–68 would apply the increase in the per share charge to UTP Exchanges following Commission approval.

[6] *See* Securities Exchange Act Release No. 44918 (Oct. 10, 2001), 66 FR 52814 (Oct. 17, 2001) (SR–NASD–2001–71) (withdrawn Nov. 29, 2001). Also on October 9, 2001, Nasdaq filed a proposed rule change to increase the per share charge payable by UTP Exchanges that use the NNMS to $0.003. *See* Securities Exchange Act Release No. 44931 (Oct. 12, 2001), 66 FR 53276 (Oct. 19, 2001) (SR–NASD–2001–72).

charge, and to provide interested persons with a greater opportunity to comment on aspects of the prior filing that assessed different levels of fees on different classes of NASD members. In this filing, Nasdaq is reintroducing the quotation update charge and a modified mechanism for market data revenue sharing.

Quotation Update Fee

Nasdaq is instituting a quotation update fee that is applicable to NASD members, in recognition of the fact that the ability to post quotes in the Nasdaq quotation montage provides market participants with the valuable opportunity to advertise the liquidity that they offer. Nasdaq believes that the absence of any charges for quotation updates has encouraged market participants to quote inefficiently, imposing unnecessary burdens on Nasdaq system capacity. Moreover, to the extent that quotations are accessed through non-Nasdaq systems, the firms that post the quotations are currently free riding on the quotation infrastructure provided by Nasdaq. Accordingly, Nasdaq will charge NASD members $0.01 for each quotation update.[7] A ''quotation update'' includes any change to the price or size of a displayed quotation or reserve size. However, a quotation update fee will not be charged for a change in the displayed quotation or reserve size that is performed automatically by the NNMS when an execution against the quotation occurs (other than a change performed by the ''Autoquote Refresh'' functionality of the NNMS, for which a fee will be assessed).

Nasdaq believes that these limitations on the applicability of the quotation update fee enhance one of the primary purposes of the fee, which is to discourage inefficient quoting. According to Nasdaq, an execution against a member's quotation indicates that the member is quoting efficiently, because the member is providing the liquidity that results in order executions. Accordingly, although the resulting quotation changes do impose system burdens, Nasdaq believes that the imposition of a quote update charge in such circumstances is not warranted at this time. A charge is imposed, however, for quotation changes made by the Autoquote Refresh functionality of the NNMS, which restores an NNMS market maker's quotation price and size in accordance with parameters established by the market maker whenever its displayed quotation size and reserve size have been decremented to zero. Nasdaq believes that a charge for quotation updates performed by this functionality is appropriate because it provides a valuable service that assists market makers in meeting their obligation continuously to maintain a two-sided quotation.

Market Data Revenue Sharing

Nasdaq proposes to share with NASD members a portion of the market data revenue that it receives, through the NASD, under the Nasdaq UTP Plan. Under the Plan, a Plan participant receives a share of market data revenues distributed by the Plan's securities information processor (''SIP''), based on reported trades attributable to such participant under the Plan.[8] Nasdaq represents that its proposal is similar to the transaction credit already in effect to share Consolidated Tape Association revenue with NASD members that trade exchange-listed stocks through Nasdaq's Intermarket Trading System[9] and similar revenue sharing programs established by UTP Exchanges.[10]

A member's credit will be 60% of the product of Eligible Revenue and the Member's Volume Percentage. Eligible Revenue is defined as (i) the portion of the net distributable revenues that Nasdaq, through the NASD, is eligible to receive under the Nasdaq UTP Plan, that is attributed to the Nasdaq Level 1 Service for NNM securities or other securities covered by the Nasdaq UTP Plan (''Eligible Securities''), minus (ii) the portion of the fee charged to Nasdaq by NASD Regulation, Inc. (''NASDR'') for regulatory services allocated to the Nasdaq Level 1 Service for Eligible Securities. The Member's Volume Percentage is defined as the average of (i) the percentage derived from dividing the total number of trades in Eligible Securities conducted on non-Nasdaq transaction systems that the member reports in accordance with NASD trade reporting rules to ACT by the total number of trades in Eligible Securities reported to ACT by NASD members, and (ii) the percentage derived from dividing the total number of shares represented by trades in Eligible Securities conducted on non-Nasdaq transaction systems that the member reports in accordance with NASD trade reporting rules to ACT by the total number of shares represented by all trades in Eligible Securities reported to ACT by NASD members. In other words, the credit is 60% of the net Level 1 revenue attributable to the member's reports of non-Nasdaq transaction system trades in Eligible Securities, with the pool of sharable revenue being comprised of Level 1 revenues distributable to Nasdaq under the UTP Plan minus an allocated portion of the NASDR regulation fee, and the member's non-Nasdaq transaction system trade report activity being measured by total number of trades and share volume.

The formula focuses on the reporting of non-Nasdaq system trades, such as internalized trades, because Nasdaq expects that members will have increasingly greater options to report such trades to UTP Exchanges in the future. In order to continue to provide an attractive environment for the reporting of these trades, Nasdaq believes that it is appropriate to share a portion of the data revenue associated with these trades with members that report them to Nasdaq.

Nasdaq believes that the proposed rule change is consistent with the Act, including section 15A(b)(5) of the Act,[11] which requires that the rules of the NASD provide for the equitable allocation of reasonable fees, dues, and other charges among members and issuers and other persons using any facility or system which the NASD operates or controls, and section 15A(b)(6) of the Act,[12] which requires rules that are not designed to permit unfair discrimination between customers, issuers, brokers or dealers. Nasdaq believes that the quotation update fee and the market data revenue sharing credit are allocated in an equitable fashion, based upon a

[7] A quotation update charge will not be imposed on UTP Exchanges at this time, because such a charge is not currently authorized by the Joint Self-Regulatory Organization Plan Governing the Collection, Consolidation and Dissemination of Quotation and transaction Information for Nasdaq-Listed Securities Traded on Exchanges on an Unlisted Trading Privilege Basis (the ''Nasdaq UTP Plan'' or the ''Plan''), which governs the posting of quotes by UTP Exchanges.

[8] At present, Nasdaq serves as the Plan's SIP, and the NASD is the Plan participant that submits trade reports received from NASD members through ACT. Accordingly, the NASD receives market data revenue under the Plan but distributes it to Nasdaq, as the entity that operates markets on the NASD's behalf. Plan participants are currently seeking proposals in order to select a new entity to serve as the Plan's SIP. Moreover, in light of Nasdaq's application for registration as a national securities exchange, Plan participants are discussing an amendment to the Plan that would make Nasdaq a Plan participant, eligible to receive a direct distribution of market data revenue based on the trades attributable to it under the Plan.

[9] *See* NASD Rule 7010(c)(2).

[10] *See, e.g.,* Securities Exchange Act Release No. 45148 (Dec. 11, 2001), 66 FR 65514 (Dec. 19, 2001) (SR–CSE–2001–05) and Securities Exchange Act Release No. 41238 (Mar. 31, 1999), 64 FR 17204 (Apr. 8, 1999) (SR–CSE–99–03). Securities Exchange Act Release No. 40591 (Oct. 22, 1998), 63 FR 58078 (Oct. 29, 1998) (SR–BSE–98–9); Securities Exchange Act Release No. 38237 (Feb. 4, 1997), 62 FR 6592 (Feb. 12, 1997) (SR–CHX–97–01).

[11] 15 U.S.C. 78*o*–3(b)(5).

[12] 15 U.S.C. 78*o*–3(b)(6).

member's quotation update activity and non-Nasdaq system trade reporting activity, respectively.

Moreover, Nasdaq believes that the level of fees charged to market participants under the proposal is reasonable. Nasdaq anticipates that overall fees for the NNMS, SelectNet, and SOES, net of the market data revenue sharing credit, will be comparable to overall fees for the NNMS, SelectNet, and SOES under the pricing changes implemented by Nasdaq on October 1 and November 1, 2001. Such fees are, in turn, estimated to be slightly lower than overall fees for SelectNet and SOES prior to the introduction of the NNMS.

B. Self-Regulatory Organization's Statement on Burden on Competition

Nasdaq believes that the proposed rule change will not result in any burden on competition that is not necessary or appropriate in furtherance of the purposes of the Act.

C. Self-Regulatory Organization's Statement on Comments on the Proposed Rule Change Received From Members, Participants, or Others

Written comments were neither solicited nor received on the proposed rule change contained in this filing. The Commission, however, had received a number of comment letters that referenced SR–NASD–2001–71, a proposed rule change instituting a quotation update fee and market data revenue sharing plan. Nasdaq withdrew SR–NASD–2001–71 prior to its implementation date. Nasdaq believes that for the most part, the comment letters did not focus on the quotation update fee or on the aspects of market data revenue sharing that are reflected in the proposed rule change contained in this filing. Moreover, Nasdaq believes that comments received on SR–NASD–2001–71 are inapposite because the proposed rule change contained in this filing are sufficiently dissimilar from the rule change proposed in SR–NASD–2001–71.

III. Date of Effectiveness of the Proposed Rule Change and Timing for Commission Action

The foregoing rule change has become effective pursuant to section 19(b)(3)(A)(ii) of the Act [13] and subparagraph (f) of Rule 19b-4,[14] thereunder because it establishes or changes a due, fee or other charge imposed by the self-regulatory organization. At any time within 60 days of the filing of the proposed rule change, the Commission may summarily abrogate the rule change if it appears to the Commission that such action is necessary or appropriate in the public interest, for the protection of investors, or otherwise in furtherance of the purposes of the Act.

IV. Solicitation of Comments

Interested persons are invited to submit written data, views, and arguments concerning the foregoing, including whether the proposed rule change, as amended, is consistent with the Act. Persons making written submissions should file six copies thereof with the Secretary, Securities and Exchange Commission, 450 Fifth Street, NW, Washington, DC 20549–0609. Copies of the submission, all subsequent amendments, all written statements with respect to the proposed rule change that are filed with the Commission, and all written communications relating to the proposed rule change between the Commission and any person, other than those that may be withheld from the public in accordance with the provisions of 5 U.S.C. 552, will be available for inspection and copying in the Commission's Public Reference Room. Copies of the filing will also be available for inspection and copying at the principal office of the NASD. All submissions should refer to file number SR–NASD–2001–96 and should be submitted by February 22, 2002.

For the Commission, by the Division of Market Regulation, pursuant to delegated authority.[15]

Margaret H. McFarland,

Deputy Secretary.

[FR Doc. 02–2486 Filed 1–31–02; 8:45 am]

BILLING CODE 8010–01–P

[13] 15 U.S.C. 78s(b)(3)(A)(ii).

[14] 17 CFR 240.19b-4(f).

[15] 17 CFR 200.30–3(a)(12).

SECURITIES AND EXCHANGE COMMISSION

[Release No. 34–45344; File No. SR–NASD–2002–14]

Self-Regulatory Organizations; Notice of Filing and Immediate Effectiveness of Proposed Rule Change by the National Association of Securities Dealers, Inc. To Extend a Pilot Amendment to NASD Rule 4120 Regarding Nasdaq's Authority To Initiate and Continue Trading Halts

January 28, 2002.

Pursuant to Section 19(b)(1) of the Securities Exchange Act of 1934 (''Act''),[1] and Rule 19b–4 thereunder,[2] notice is hereby given that on January 24, 2002, the National Association of Securities Dealers, Inc. (''NASD''), through its subsidiary, The Nasdaq Stock Market, Inc. (''Nasdaq'') filed with the Securities and Exchange Commission (''Commission'') the proposed rule change as described in Items I, II and III below, which Items have been prepared by Nasdaq. Nasdaq filed the proposal pursuant to Section 19(b)(3)(A) of the Act,[3] and Rule 19b–4(f)(6) thereunder,[4] which renders the proposal effective upon filing with the Commission.[5] The Commission is publishing this notice to solicit comments on the proposed rule change from interested persons.

I. Self-Regulatory Organization's Statement of the Terms of Substance of the Proposed Rule Change

Nasdaq proposes to extend a pilot amendment to NASD Rule 4120, which clarified Nasdaq's authority to initiate and continue trading halts in circumstances where Nasdaq believes that extraordinary market activity in a security listed on Nasdaq may be caused by the misuse or malfunction of an electronic quotation, communication, reporting, or execution system operated by, or linked to, Nasdaq. The proposal would extend the pilot for an additional three months, through April 30, 2002. There is no new proposed rule language.

II. Self-Regulatory Organization's Statement of the Purpose of, and Statutory Basis for, the Proposed Rule Change

In its filing with the Commission, Nasdaq included statements concerning the purpose of and basis for its proposal and discussed any comments it received regarding the proposal. The text of these statements may be examined at the places specified in Item IV below. Nasdaq has prepared summaries, set forth in Sections A, B and C below, of the most significant aspects of such statements.

A. Self-Regulatory Organization's Statement of the Purpose of, and Statutory Basis for, the Proposed Rule Change

1. Purpose

On May 11, 2001, Nasdaq filed with the Commission a proposed rule change

[1] 15 U.S.C. 78s(b)(1).

[2] 17 CFR 240.19b–4.

[3] 15 U.S.C. 78s(b)(3)(A).

[4] 17 CFR 240.19b–4(f)(6).

[5] Nasdaq asked the Commission to waive the 5-day pre-filing notice requirement and the 30-day operative delay. *See* Rule 19b–4(f)(6)(iii). 17 CFR 240.19b–4(f)(6)(iii).

to clarify Nasdaq's authority to initiate and continue trading halts in circumstances where Nasdaq believes that extraordinary market activity in a security listed on Nasdaq may be caused by the misuse or malfunction of an electronic quotation, communication, reporting, or execution system operated by, or linked to, Nasdaq.[6] On July 27, 2001, Nasdaq filed Amendment No. 1 to the proposed rule change, which requested that the Commission approve the proposed rule change on a three-month pilot basis, expiring on October 27, 2001.[7] Also on July 27, 2001, the Commission approved the proposed rule change and Amendment No. 1.[8] On September 27, 2001, Nasdaq filed a proposed rule change to extend the pilot period for the rule through January 27, 2002.[9]

As a result of the decentralized and electronic nature of the market operated by Nasdaq, the price and volume of transactions in a Nasdaq-listed security may be affected by the misuse or malfunction of electronic systems, including systems that are linked to, but not operated by, Nasdaq. In circumstances where misuse or malfunction results in extraordinary market activity, Nasdaq believes that it may be appropriate to halt trading in an affected security until the system problem can be rectified. In the period during which the rule change has been in effect, Nasdaq has not had occasion to initiate a trading halt under the rule. Nevertheless, Nasdaq believes that the rule is an important component of its authority to maintain the fairness and orderly structure of the Nasdaq market. Accordingly, Nasdaq believes the rule should remain in effect on an uninterrupted basis.

2. Statutory Basis

Nasdaq believes that the proposal is consistent with the provisions of Section 15A of the Act,[10] with the provisions of Section 15A(b)(6) of the Act,[11] which requires, among other things, that a registered national securities association's rules be designed to prevent fraudulent and manipulative acts and practices, to promote just and equitable principles of trade, and, in general, to protect investors and the public interest.

B. Self-Regulatory Organization's Statement on Burden on Competition

Nasdaq believes that the proposed rule change will impose no burden on competition that is not necessary or appropriate in furtherance of the purposes of the Act.

C. Self-Regulatory Organization's Statement on Comments on the Proposed Rule Change Received From Members, Participants or Others

Instinet Corporation (''Instinet'') has commented on the proposed rule change. Nasdaq has filed a proposed rule change to make permanent the pilot amendment to Rule 4120 (SR–NASD–2001–75). Before the expiration of the pilot period extension proposed herein, Nasdaq will file an amendment to SR–NASD–2001–75 that will modify the proposed rule and seek additional public comment on the rule as modified. Nasdaq will provide the Commission with a statement regarding any comment letters received by the Commission concerning SR–NASD–2001–75, including Instinet's comment letter.

III. Date of Effectiveness of the Proposed Rule Change and Timing for Commission Action

Because the foregoing proposed rule change does not:

(i) Significantly affect the protection of investors or the public interest;

(ii) Impose any significant burden on competition; and

(iii) Become operative for 30 days from the date on which it was filed, or such shorter time as the Commission may designate, it has become effective pursuant to Section 19(b)(3)(A) of the Act[12] and Rule 19b–4(f)(6) thereunder.[13] At any time within 60 days of the filing of the proposed rule change, the Commission may summarily abrogate such rule change if it appears to the Commission that such action is necessary or appropriate in the public interest, for the protection of investors, or otherwise in furtherance of the purposes of the Act.

Nasdaq has requested that the Commission waive the 5-day pre-filing notice requirement and the 30-day operative delay. The Commission finds good cause to waive the 5-day pre-filing notice requirement and the 30-day operative delay because such designation is consistent with the protection of investors and the public interest. Acceleration of the operative date will allow the pilot to operate continuously through April 30, 2002, while the Commission seeks comment on SR–NASD–2001–75. For these reasons, the Commission finds good cause to waive both the 5-day pre-filing requirement and the 30-day operative waiting period.[14]

IV. Solicitation of Comments

Interested persons are invited to submit written data, views, and arguments concerning the foregoing, including whether the proposal is consistent with the Act. Persons making written submissions should file six copies thereof with the Secretary, Securities and Exchange Commission, 450 Fifth Street, NW, Washington, DC 20549–0609. Copies of the submission, all subsequent amendments, all written statements with respect to the proposed rule change that are filed with the Commission, and all written communications relating to the proposed rule change between the Commission and any person, other than those that may be withheld from the public in accordance with the provisions of 5 U.S.C. 552, will be available for inspection and copying in the Commission's Public Reference Room. Copies of such filing will also be available for inspection and copying at the principal office of the NASD. All submissions should refer to file number SR–NASD–2002–14 and should be submitted by February 22, 2002.

For the Commission, by the Division of Market Regulation, pursuant to delegated authority.[15]

Margaret H. McFarland,

Deputy Secretary.

[FR Doc. 02–2491 Filed 1–31–02; 8:45 am]

BILLING CODE 8010–01–P

[6] Securities Exchange Act Release No. 44307 (May 15, 2001), 66 FR 28209 (May 22, 2001) (SR–NASD–2001–37).

[7] *See* July 27, 2001 letter from Thomas P. Moran, Associate General Counsel, Nasdaq, to Alton Harvey, Division of Market Regulation, Commission.

[8] Securities Exchange Act Release No. 44609 (July 27, 2001), 66 FR 40761 (August 3, 2001) (SR–NASD–2001–37).

[9] Securities Exchange Act Release No. 44870 (September 28, 2001), 66 FR 50701 (October 4, 2001) (SR–NASD–2001–60).

[10] 15 U.S.C. 78o–3.

[11] 15 U.S.C. 78o–3(b)(6).

[12] 15 U.S.C. 78s(b)(3)(A).

[13] 17 CFR 240.19b–4(f)(6).

[14] For purposes only of accelerating the operative date of this proposal, the Commission has considered the proposed rule's impact on efficiency, competition, and capital formation. 15 U.S.C. 78c(f).

[15] 17 CFR 200.30–3(a)(12).

SECURITIES AND EXCHANGE COMMISSION

[Release No. 34–45331; File No. SR–NYSE–2001–50]

Self-Regulatory Organizations; Notice of Filing and Immediate Effectiveness of Proposed Rule Change by the New York Stock Exchange, Inc. Extending the Pilot Program for NYSE Direct+ until December 23, 2002

January 24, 2002.

Pursuant to section 19(b)(1) of the Securities Exchange Act of 1934 (''Act'')[1] and Rule 19b–4 thereunder,[2] notice is hereby given that on December 17, 2001, the New York Stock Exchange, Inc. (''NYSE'' or ''Exchange'') filed a proposed rule change with the Securities and Exchange Commission (''SEC'' or ''Commission''). The proposed rule change is described in Items I, II, and III below, which Items have been prepared by the Exchange. The Exchange filed the proposed rule change pursuant to section 19(b)(3)(A) of the Act,[3] and Rule 19b–4(f)(6) thereunder,[4] which renders the proposed rule change effective upon filing with the Commission. The Commission is publishing this notice to solicit comments on the proposed rule change from interested persons.

I. Self-Regulatory Organization's Statement of the Terms of Substance of the Proposed Rule Change

The Exchange is proposing to extend the pilot program period for NYSE Direct+, and all pertinent interpretations, for an additional year, or until December 23, 2002. No changes to previously approved rule language are being proposed.

II. Self-Regulatory Organization's Statement of the Purpose of, and Statutory Basis for, the Proposed Rule Change

In its filing with the Commission, the Exchange included statements concerning the purpose of and basis for the proposed rule change and discussed any comments it received on the proposed rule change. The text of these statements may be examined at the places specified in Item IV below. The Exchange has prepared summaries, set forth in sections A, B, and C below, of the most significant aspects of such statements.

A. Self-Regulatory Organization's Statement of the Purpose of, and Statutory Basis for, the Proposed Rule Change

1. Purpose

On December 22, 2000, the Commission approved a proposed rule change implementing NYSE Direct+, an automatic execution facility for certain limit orders of 1099 shares or less, on a one year pilot basis ending on December 21, 2001.[5] The Exchange has filed this proposed rule change to extend the NYSE Direct+ pilot program for another year, or until December 23, 2002.

The purpose of the original proposed rule change was to provide for the automatic execution of limit orders of 1099 shares or less (''auto ex'' orders) against trading interest reflected in the Exchange's published quotation. Under NYSE Direct+, it is not mandatory that all limit orders of 1099 shares be entered as auto ex orders; rather, the member organization entering the order or its customer if enabled by the member organization can choose to enter an auto ex order when such member organization (or customer) believes that the speed and certainty of an execution at the Exchange's published bid or offer price is in its customer's best interest. In such a case, the member organization enters an auto ex order priced at or above the Exchange's published offer price (in the case of an auto ex order to buy), or an auto ex order priced at or below the Exchange's published bid price (in the case of an auto ex order to sell). The auto ex order then receives an automatic execution without being exposed to the auction market, provided the bid or offer is still available. In any instance where, as specified in Rule 1000 below, the automatic execution feature is not available, the auto ex order will be entered for execution in the Exchange's auction market. Auto ex transactions are identified on the Consolidated Tape with a unique identifier. The Exchange's published bid or offer is automatically decremented to the extent of the size of the auto ex order to reflect the automatic execution. The contra side of the auto ex order execution is the trading interest reflected in the Exchange's bid or offer, with such interest participating in the execution in accordance with the Exchange's auction market principles of priority and parity as codified in NYSE Rule 72. Any member organization or a customer if enabled by the member organization that believed in any particular case that the customer's interests would be best served by affording the customer's order the opportunity for price improvement may enter a limit or market order by means of the SuperDOT system for representation in the auction market, rather than an auto ex order.

The Exchange's proposal was implemented in a new series of rules, Rules 1000 through 1005 and a proposed amendment to Rule 13. The pilot program is currently available for all stocks.[6] A description of all existing Exchange rules affected by NYSE Direct+, as well as the new series of Rules implementing NYSE Direct+ follows:

Rule 13

Rule 13 was amended to define an auto ex order type. An auto ex order now includes a limit order of 1099 shares or less priced at or above the Exchange's published offer (in the case of an order to buy) or at or below the Exchange's published bid (in the case of an order to sell) which shall receive an automatic execution against the interest reflected in the published quotation, provided the size of the published quotation is greater than 100 shares. An auto ex order or any portion thereof that cannot be immediately executed shall be displayed as a limit order in the Exchange's auction market.

The new rules provide as follows:

Rule 1000

Rule 1000 states the basic operative principles providing for automatic execution of limit orders of 1099 shares or less against the Exchange's published quotation. The Rule lists six instances in which the automatic feature would not be available due to market situations, lack of depth in the published quotation, or inappropriate pricing of the auto ex order, as follows:

(i) The NYSE's published quotation is non-firm (pursuant to NYSE Rule 60);

(ii) The NYSE's published quotation has been gapped (pursuant to the Exchange's usual procedures for such situations) for a brief period because of an influx of orders on one side of the market, and the Exchange's published quotation size is 100 shares at the bid and/or offer;

[1] 15 U.S.C. 78s(b)(1).

[2] 17 CFR 240.19b–4.

[3] 15 U.S.C. 78s(b)(3)(A).

[4] 17 CFR 240.19b–4(f)(6). The Exchange filed the pre-filing notice required by Rule 19b–4(f)(6) by filing a written description of the proposed rule change and the text of the proposed rule change on November 28, 2001.

[5] Securities Exchange Act Release No. 43767 (December 22, 2000), 66 FR 834 (January 4, 2001)(SR-NYSE–00–18).

[6] When initially approved, NYSE Direct+ was only implemented for a limited number of stocks prior to being made available for all stocks. *See* Securities Exchange Act Release No. 43767 (December 22, 2001), 66 FR 834 (January 4, 2001) (SR–NYSE–00–18).

(iii) A better price exists in another ITS participating market center for a single-sided auto ex order;

(iv) The NYSE's published bid or offer is 100 shares (see Rule 1002(c));

(v) A transaction outside the Exchange's published quotation pursuant to NYSE Rule 127 is in the process of being completed, in which case the specialist should publish a 100-share bid and/or offer; or

(vi) Trading in the subject security has been halted.

Rule 1000 provides that an auto ex order that cannot be immediately executed for any of the above reasons shall be automatically entered for execution in the Exchange's auction market. Once it is entered in the auction market, it will be treated the same as any other limit order entered onto the Exchange. The Exchange also notes that the provisions of proposed Rule 1000(ii) and (v) are, in effect, examples of proposed Rule 1000(iv) in that each relate to situations where the Exchange's published bid or offer will be 100 shares.

Rule 1000(ii) provides that auto-ex orders will not be executed when the Exchange's published quotation has been gapped for a brief period. The procedure to ''gap'' a quotation involves setting the bid and asked prices at a spread wider than normal in a stock in order to alert market participants that a special situation exists. This may occur if a member proposes to effect a block transaction at a significant premium or discount from the prevailing market and the specialist is aware of interest on the contra side. In such situations, the size of the quotation is set at 100 shares by 100 shares.

Rule 1000(v) provides that auto-ex orders will not be executed when an auction market execution under Exchange Rule 127 is being completed. Rule 127 establishes procedures for executions outside the NYSE's published bid or offer. During the process for completing such transactions, the specialist should publish a bid and/or offer that is 100 shares.

Rule 1001

Rule 1001(a) provides that the contra side of an auto ex execution shall be trading interest reflected in the Exchange's published quotation, consistent with the principles of priority and parity as codified in Exchange Rule 72.

Rule 1001(a) also provides that it shall be the specialist's responsibility, after receiving a report that an auto ex order has been executed, to assign the appropriate number of shares to each bidder or offeror, consistent with the principles of Exchange Rule 72, with a universal contra being reported as the contra to each auto ex execution. Rule 1001(a) also provides that the specialist shall take the contra side of an auto ex execution where the interest in the published quotation against which the auto ex order was executed is no longer available.

Rule 1001(b) provides that if the published bid or offer is not of sufficient depth to fill an auto ex order in its entirety, the unfilled balance of the order shall be displayed in the auction market.

Rule 1001(c) provides that if executions of auto ex orders have traded with all trading interest reflected in the Exchange's published bid or offer, the Exchange shall disseminate a bid or offer at that price of 100 shares until the specialist requotes that market. Auto ex orders will not receive an automatic execution against any 100 share bid or offer, whether a default bid or offer or otherwise, but rather will be displayed in the auction market. Rule 1001(c) provides that the specialist shall be the contra party to any auction market interest seeking to trade against the 100-share default bid or offer.

Rule 1001(d) provides that the concept of precedence based on size, which is codified in Rule 72, shall not apply with respect to the contra side of an auto ex execution, with such contra side interest being assigned, as noted above, in accordance with the principles of priority and parity in Rule 72.

Rule 1002

Rule 1002 provides that auto ex orders may be entered on any day in a particular stock from the time the Exchange has published a bid or offer in that stock until 3:59 p.m., at which time the specialist is preparing the closing transaction in the security. If orders designated as auto ex are entered before a quote is published or after 3:59 p.m., the orders will be treated as limit orders in the auction market.

Rule 1003

Rule 1003 provides that if a transaction is being completed in the auction market, and an execution involving auto ex orders is reported at a different price before the auction market transaction is reported, any tick test applicable to the auction market transaction shall be based on the last reported trade prior to the execution of the auto ex order.

For example, assume the Exchange's published quotation is 20 bid for 5000 shares, with 5000 shares offered at 20.20. The last reported sale is 20.10, which is a plus tick. A broker in the crowd bids 20.10 for 5000 shares, and another broker, representing a short sale order, agrees to trade at the 20.10 bid price. Before the trade at 20.10 is reported, an auto ex order to buy is automatically executed at the 20.20 published offer price, making the trade at 20.10 a minus tick, which would preclude execution of the order to sell short. Rule 1003 provides that, in this instance, the short sale tick test would be based on the last reported sale of 20.10, a plus tick, at the time the crowd brokers agreed to trade.[7]

Rule 1004

Rule 1004 provides that executions of auto ex orders shall elect stop orders and percentage orders electable at the price of such executions. The rule also provides that stop orders so elected shall be executed pursuant to the Exchange's auction market procedures, and shall not be guaranteed executions at the prices of subsequent auto ex executions.

Rule 1005

Rule 1005 in part provides that auto ex orders for the same customer may be entered at time intervals of no less than 30 seconds between entry of each such order, on a per stock basis.

Addition to Rule 476A Summary Fine List. The Exchange also obtained in the original pilot approval to add to the List of Rules subject to imposition of fines under Rule 476A procedures the failure by members or member organizations to comply with the provisions of Rules 1000–1005, which implement the Exchange's NYSE Direct+® facility. Rule 476A provides that the Exchange may impose a fine, not to exceed $5,000, on any member, member organization, allied member, approved person, or registered or non-registered employee of a member or member organization for a minor violation of certain specified Exchange rules.

[7] Rule 1003 is not consistent with the strict application of last reported ''tick'' tests in Rule 10a-1 under the Act or Exchange Rule 440B, and, in conjunction with its initial filing of the rule, the Exchange sought an exemption from Rule 10a-1 for the limited purpose of recognizing that transactions in compliance with tick tests when effected would not be deemed to be violative if reported after an auto ex execution changed the tick. The Commission granted a limited exemption from Rule 10a-1 to permit floor brokers to effect short sales in accordance with Rule 1003 during the NYSE Direct+ pilot subject to certain conditions. *See* Letter from James E. Buck, Secretary and Senior Vice President, Exchange, to Larry E. Bergmann, Senior Associate Director, Division of Market Regulation, SEC, dated December 21, 2000 (''Exemption Request'') and response by Larry E. Bergmann to James E. Buck, dated December 22, 2000 (''Rule 10a-1 Exemption Letter'').

The purpose for the proposed rule change to Rule 476A was to facilitate the Exchange's ability to induce compliance with all aspects of the above-cited rules. The Exchange believed that failure to comply with the requirements of these rules and procedures should be addressed with an appropriate sanction and sought Commission approval to add violations of these requirements to the Rule 476A List so as to have a broad range of regulatory responses available. The Exchange continues to believe that this would more effectively encourage compliance by enabling a prompt, meaningful and heightened regulatory response (*e.g.*, the issuance of a fine rather than a cautionary letter) to a minor violation of these rules.

The Exchange again wishes to emphasize the importance it places upon compliance with the above-named rules. While the Exchange, upon investigation, may determine that a violation of any of these rules is a minor violation of the type which is properly addressed by the procedures adopted under Rule 476A, in those instances where investigation reveals a more serious violation of the above-described rules, the Exchange will provide an appropriate regulatory response. This includes the full disciplinary procedures available under Rule 476.

Interpretive Issues

The Exchange has previously submitted for Commission approval the following interpretations of several NYSE rules, as well as a no action or interpretive position which the Exchange requested the Commission to adopt under its short sale rule, Rule 10a–1.[8] The Exchange requests that these exemptions and interpretations be extended for an additional one year concurrent with the extension of the NYSE Direct+ pilot until December 22, 2002.[9]

These matters concern situations pursuant to proposed Rule 1001(a)(iv) where the specialist may be required to take the contra side of an auto ex execution against the published quotation, even though the specialist's interest was not part of such quotation. For example, the published quotation may reflect the interest of a broker in the Crowd whose interest is then executed in an auction market transaction; but before the published quotation can be updated, an auto ex order is executed against such quotation. In such instance, the specialist would be required to take the contra side of the auto ex execution. In other instances, the Crowd broker might cancel his or her interest as reflected in the published quotation, but an auto ex order might be executed against such quotation before it can be updated. Again, in such instance, the specialist would be required to take the contra side of the auto ex execution.

- *Rule 104.* Rule 104 contains the specialist's affirmative and negative obligations, and restricts the specialists' ability to purchase stock on direct plus ticks, or sell stock on direct minus ticks. The Exchange is proposing that any instance in which the specialist is effecting such a direct tick transaction only because he or she has been required to assume the contra side of an auto ex execution as described above shall be deemed to be a ''neutral'' transaction for purposes of Rule 104, and shall be deemed not to be in violation of the rule. The Exchange believed that this interpretation is appropriate because the specialist is not setting the price, but is simply being required to trade at a price set by other market participants.
- *Rule 10a–1.* Rule 10a–1 under the Act and Exchange Rule 440B do not permit the execution of short sales on minus or zero minus ticks. The Exchange believes that exemptive relief from Rule 10a–1 should continue to apply to a specialist whenever he or she is required to take the contra side of an auto ex execution on a minus or zero minus tick because of Exchange Rule 1001(a)(iv), and has an existing short position, or would be creating a short position by virtue of such execution. In particular, the Exchange believes that the situation where a specialist sells short on a minus or zero minus tick because he or she is required to become the contra-party to an executed auto ex trade in the limited circumstances where the interest reflected in the published quotation against which the auto ex order was executed is no longer available does not implicate the policy concerns of Rule 10a–1.

Further, the Exchange believes that exemptive relief from Rule 10a–1 should continue to apply to allow a floor broker to report a short sale that is on a minus or zero-minus tick relative to the last reported auto ex transaction on the NYSE at the time of the floor broker's report, if at the time the floor broker agreed to sell short, the short sale was not on a minus or zero-minus tick relative to the last reported sale. As with all other trades, floor brokers seeking to rely on Rule 1003 with respect to short sales in auction market transactions subject to Rule 10a–1 and Exchange Rule 440B must report such auction market transactions immediately upon agreement to the trade.[10]

- *Rule 123A.40.* The specialist shall not be required to fill any stop orders elected by an auto ex execution at the price of the electing sale in any instance where the specialist was required by Rule 1001(a)(iv) to take the contra side of an auto ex execution.
- *Rule 91.* As the specialist does not accept an auto ex order for execution or act as agent for such order, the transaction confirmation requirements of Rule 91 shall not be applicable in any instance where the specialist is the contra party to an auto ex execution.

2. Statutory Basis

The Exchange believes that the proposed rule change is consistent with section 6(b)(5) of the Act[11] which requires that an Exchange have rules that are designed to promote just and equitable principles of trade, to remove impediments to and perfect the mechanism of a free and open market and a national market system and, in general, to protect investors and the public interest. The proposed rule change also is designed to support the principles of section 11A(a)(1) of the Act[12] in that it seeks to assure economically efficient execution of securities transactions, make it practicable for brokers to execute investors' orders in the best market and provide an opportunity for investors' orders to be executed without the participation of a dealer.

With respect to the addition to the summary fine list under Rule 476A, the proposed rule change also advances the objectives of section 6(b)(6) of the Act[13] because it provides a procedure whereby member organizations can be ''appropriately disciplined'' in those instances when a rule violation is minor in nature, but a sanction more serious than a warning or cautionary letter is appropriate. The proposed rule change provides a fair procedure for imposing such sanctions, in accordance with the

[8] *See* Exemption Request and Rule 10a–1 Exemption Letter.

[9] *Id.*

[10] *See* Exemption Request and Rule 10a–1 Exemption Letter. In order to verify compliance with Rule 10a–1, where an auto ex transaction takes place while the auction market transaction is being completed and the auto ex price would cause the auction market trade to be reported on a minus or zero-minus tick, the Floor broker effecting the short sale must obtain NYSE Floor Official approval that the transaction was agreed upon at a price in compliance with Rule 10a–1 and Rule 440B. Each such short sale must be reported as a ''sold sale.'' Further, Floor brokers will not be allowed to sell short at a price lower than the best bid displayed in the auction market at the time the transaction is reported.

[11] 15 U.S.C. 78f(b)(5).

[12] 15 U.S.C. 78k–1(a)(1).

[13] 15 U.S.C. 78f(b)(6).

requirements of sections 6(b)(7) and 6(d)(1) of the Act.[14]

B. Self-Regulatory Organization's Statement on Burden on Competition

The Exchange does not believe that the proposed rule change will result in any burden on competition that is not necessary or appropriate in furtherance of the purposes of the Act.

C. Self-Regulatory Organization's Statement on Comments on the Proposed Rule Change Received from Members, Participants, or Others

The Exchange has neither solicited nor received written comments on the proposed rule change.

III. Date of Effectiveness of the Proposed Rule Change and Timing for Commission Action

The foregoing rule change has become effective upon filing pursuant to section 19(b)(3)(A)(iii) of the Act[15] and Rule 19b–4(f)(6)[16] thereunder because the proposed rule change does not (i) significantly affect the protection of investors or the public interest; (ii) impose any significant burden on competition; and (iii) become operative for 30 days from the date on which the proposed rule change was filed, or such shorter time as the Commission may designate. At any time within 60 days of the filing of a rule change pursuant to section 19(b)(3)(A) of the Act, the Commission may summarily abrogate the rule change if it appears to the Commission that such action is necessary or appropriate in the public interest, for the protection of investors, or otherwise in furtherance of the purposes of the Act.

The Commission finds that it is appropriate to accelerate the operative date of the proposed rule change and to permit the proposed rule change to become immediately operative because the proposal simply extends a previously approved pilot program until December 22, 2002.[17] No changes to NYSE Direct+ are being proposed at this time and the Commission has not received any comments on the pilot program. In addition, the Exchange appropriately filed a pre-filing notice as required by Rule 19b–4(f)(6).[18]

[14] 15 U.S.C. 78f(b)(6) and 78f(d)(1).

[15] 15 U.S.C. 78s(b)(3)(A).

[16] 17 CFR 240.19b–4(f)(6).

[17] The Commission confirms that the Rule 10a–1 Exemption Letter remains in effect for the duration of the pilot.

[18] 17 CFR 240.19b–4(f)(6). For purpose only of accelerating the operative date of this proposal, the Commission has considered the proposed rule's impact on efficiency, competition, and capital formation. 15 U.S.C. 78c(f).

IV. Solicitation of Comments

Interested persons are invited to submit written data, views, and arguments concerning the foregoing, including whether the proposed rule change is consistent with the Act. Persons making written submissions should file six copies thereof with the Secretary, Securities and Exchange Commission, 450 Fifth Street, NW., Washington, DC 20549–0609. Copies of the submission, all subsequent amendments, all written statements with respect to the proposed rule change that are filed with the Commission, and all written communications relating to the proposed rule change between the Commission and any person, other than those that may be withheld from the public in accordance with the provisions of 5 U.S.C. 552, will be available for inspection and copying in the Commission's Public Reference Room. Copies of such filing will also be available for inspection and copying at the principal office of the Exchange. All submissions should refer to File No. SR–NYSE–2001–50 and should be submitted by February 22, 2002.

For the Commission, by the Division of Market Regulation, pursuant to delegated authority.[19]

Margaret H. McFarland,

Deputy Secretary.

[FR Doc. 02–2487 Filed 1–31–02; 8:45 am]

BILLING CODE 8010–01–P

[19] 17 CFR 200.30–3(a)(12).

SECURITIES AND EXCHANGE COMMISSION

[Release No. 34–45343; File No. SR–Phlx–2001–120]

Self-Regulatory Organizations; Notice of Filing of Proposed Rule Change and Amendment No. 1 by the Philadelphia Stock Exchange, Inc. to Amend Phlx Rule 237, ''The eVWAP Morning Session''

January 28, 2002.

Pursuant to Section 19(b)(1) of the Securities Exchange Act of 1934 (''Act'')[1] and Rule 19b–4[2] thereunder, notice is hereby given that on December 26, 2001, the Philadelphia Stock Exchange, Inc.(''Phlx'' or ''Exchange'') filed with the Securities and Exchange Commission (''Commission'') the proposed rule change as described in Items I, II, and III below, which Items have been prepared by the Exchange. On January 25, 2002, the Phlx amended the proposal.[3] The Commission is publishing this notice to solicit comments on the proposed rule change, as amended, from interested persons.

[1] 15 U.S.C. 78s(b)(1).

[2] 17 CFR 240.19b–4.

I. Self-Regulatory Organization's Statement of the Terms of Substance of the Proposed Rule Change

The Exchange proposes to amend Phlx Rule 237, ''The eVWAP Morning Session,'' to: (1) Allow Exchange-Traded Fund Shares[4] to be executed on the eVWAP System (''System'');[5] (2) codify order increment size requirements; and (3) make minor technical amendments to Phlx Rule 237.

Background

The System is a daily, pre-opening order matching session for the execution of large-sized stock orders at the volume weighted average price (''VWAP''). The matched and executed orders are assigned a VWAP after the close of regular trading. The System operates as a facility of the Phlx under Section 3(a)(2) of the Act and is governed by Phlx Rule 237.[6]

Currently, the securities eligible for execution in the System pursuant to Phlx Rule 237(b) are exchange listed component issues of the Standard & Poor's 500 index and any exchange listed issue that has been designated by the compiler of the index for inclusion in such index and any of 300 New York Stock Exchange (''NYSE'') issues selected according to a prescribed selection process.[7]

Pursuant to Phlx Rule 237, access to the System is limited to ''Committers,''[8] who enter ''commitments'' and ''Users,''

[3] *See* January 24, 2002 letter from Cynthia K. Hoekstra, Counsel, Phlx, to Joseph P. Morra, Special Counsel, Division of Market Regulation, Commission (''Amendment No. 1''). In Amendment No. 1, the Phlx made minor, technical changes to the proposed rule language.

[4] Exchange-Traded Fund Shares include exchange listed securities representing interests in open-end unit investment trusts or open-end management investment companies that hold securities based on an index or a portfolio of securities. See Phlx Rule 1000(b)(42).

[5] The System was developed by Universal Trading Technologies Corporation, Inc. (''UTTC''). UTTC is a subsidiary of the Ashton Technology Group, Inc.

[6] *See* Securities Exchange Act Release No. 41210 (March 24, 1999), 64 FR 15857 (April 1, 1999) (SR–Phlx–96–14).

[7] The 300 NYSE issues are selected as follows: The top 400 NYSE issues with the highest market capitalization excluding the 100 issues that have the lowest average daily dollar trading volume over 20 days preceding the eligibility determination. Eligibility is determined at least semi-annually. *See* Phlx Rule 237(b).

[8] ''Committers'' are Exchange members that are: (i) Phlx Floor traders (*i.e.,* a Phlx Specialist or Phlx Alternate Specialist in the eligible stock that is the subject of the Commitment); or (ii) Phlx Off-Floor Liquidity Providers (members that commit to provide contra-side liquidity). *See* Phlx Rule 237(d).

who enter ''orders.'' A ''User'' is defined as an Exchange member or non-member who enters orders through the System. Users may enter three types of orders: (i) Basic; (ii) cross; and (iii) facilitation. A basic order is a standard, one-sided order to buy or sell. A basic order may be restricted, meaning it is executable against non-members only. A cross order is a two-sided order, with both sides comprised of non-member interest, with instructions to match the identified buy-side with the identified sell-side. The two sides making up a cross can be entered separately, with the contra-side identified.

A facilitation order is a two-sided order, with an identified Phlx member on the contra-side to act as a facilitator for that order (such member is known as a ''Guarantor''). The contra-side may be entered together with, or separate from, the facilitation order. Facilitation orders can be submitted on behalf of Phlx members or non-members. Unlike basic orders, facilitation orders may not be restricted. One of the three types of facilitation orders that are available to Users is an unconditional facilitation order, which is to be executed against an identified Guarantor or not at all.[9] This order is a type of cross involving a Phlx member Guarantor.

Proposal

The Exchange proposes to amend Phlx Rule 237 to allow ETFs to be eligible for eVWAP trading.[10] In addition, the Exchange proposes to codify two amendments to Phlx Rule 237 allowing: (1) All basic orders and commitments to be entered in 100 share increments, with the minimum order size remaining at 5,000 shares and the minimum commitment size remaining at 2,500 shares; and (2) cross orders, including unconditional facilitation orders, to be excepted from the 5,000 minimum order size requirements and to be executed in 100 share increments, with a minimum order size of 100 shares.[11]

Also, the Exchange proposes to make minor technical amendments to change the reference to stock to security in order to accurately reflect the addition of ETFs and to replace a reference to UTS with eVWAP.[12]

The text of the proposed rule change is below. Additions are in italics; deletions are in brackets.

Rule 237. The eVWAP Morning Session

(a) No change.

(b) Eligible Securities. The following securities will be eligible for execution in the System:

(i) Exchange listed component issues of the Standard & Poor's 500 index and any exchange listed issue that has been designated by the compiler of such index for inclusion in such index.

(ii) Any of 300 New York Stock Exchange (NYSE) issues selected as follows: the 400 NYSE issues with the highest market capitalization excluding the 100 issues that have the lowest average daily dollar trading volume over 20 days preceding the eligibility determination, with eligibility determined at least semi-annually.

(iii) Any Exchange-Traded Fund/ Shares that are eligible for trading on the Exchange.

(c)–(d) No change.

(e) Order Entry. eVWAP orders will only be accepted during the eVWAP Order Entry Time Period from 5:00 a.m. to 9:15 a.m. except the Exchange may establish a different period respecting the *eVWAP* [UTS] trading floor terminal. Morning Session orders will only be eligible for execution on the day the order is placed and only through the eVWAP System. The minimum order size is 5,000 shares *except for unconditional facilitation and cross orders, for which the minimum order size is 100 shares.* The minimum commitment size is 2,500 shares. All orders and commitments must be in *100* [500] share increments including any ''AON'' or ''MON'' designations, as defined below. The Exchange may determine whether different sizes should be established.

(e)(i) No change.

(e)(ii)(c) *security* [stock] symbol;

(f)–(j) No change.

(k) Trading Halts. Nothing in this Rule shall be construed to limit the ability for the Exchange to otherwise halt or suspend trading in any *security* [stock] traded through the eVWAP System.

(l)–(m) No change.

* * * * *

II. Self-Regulatory Organization's Statement of the Purpose of, and Statutory Basis for, the Proposed Rule Change

In its filing with the Commission, the Phlx included statements concerning the purpose of and basis for the proposed rule change and discussed any comments it received on the proposed rule change. The text of these statements may be examined at the places specified in Item IV below. The Phlx has prepared summaries, set forth in Sections A, B, and C below, of the most significant aspects of such statements.

A. Self-Regulatory Organization's Statement of the Purpose of, and Statutory Basis for, the Proposed Rule Change

1. Purpose

The Phlx proposes to amend Phlx Rule 237 to address needs identified to the system operator, namely the addition of ETFs and the codification of certain order increment sizes, in order to attract new business to eVWAP.

The Exchange proposes to allow ETFs to be traded on the System. ETFs are becoming an alternative product to trading the actual securities comprising an index or fund. A number of eVWAP participants have requested that the Phlx make ETFs eligible for inclusion in the system pursuant to Phlx Rule 237 issue eligibility procedures. The Phlx believes that allowing ETFs to be traded through the eVWAP System should help to meet the demands of these institutional traders and other market participants that desire volume weighted average price-based transactions on ETFs. Moreover, the Phlx believes that adding ETFs to the System should increase eVWAP order flow and provide additional trading alternatives to market participants.

The Phlx proposes to codify two changes to Phlx Rule 237 regarding order and commitment size. The Exchange sought to promote additional trading through the System by allowing: (1) all basic orders and commitments to be entered in 100 share increments, with the minimum order size remaining at 5,000 shares and the minimum commitment size remaining at 2,500 shares; and (2) cross orders, including unconditional facilitation orders, to be

[9] The other two types of facilitation orders that are available to Users are (i) conditional facilitation orders: Execute against an identified Guarantor after attempting to be executed against non-members to the extent possible; and (ii) last resort facilitation: Execute against an identified Guarantor only after attempting to execute against all other orders and commitments to the extent possible.

[10] The ETF trades executed through eVWAP will be reported pursuant to the applicable reporting channel, the Consolidated Tape Association. Initially, the Exchange intends to include one ETF, which is currently traded on the Exchange's equity floor, to the System. Other ETFs may be listed pursuant to unlisted trading privileges (''UTP'') even if not traded on the Phlx equity floor during regular trading hours.

[11] These modifications were approved by the Exchange's Floor Procedure Committee on March 22, 2001 (cross orders) and July 17, 2001 (minimum order and commitment size). These modifications were based on market and participant need and did not require prior Commission approval. *See* Securities Exchange Act Release No. 41210 (March 24, 1999), 64 FR 15857 (April 1, 1999) (SR–Phlx–96–14).

[12] Previously, references to UTS were eliminated and replaced by eVWAP. However, one reference to UTS was not changed. *See* Securities Exchange Act Release Nos. 42702 (April 19, 2000), 65 FR 24528 (April 26, 2000) (SR–Phlx–2000–19) and 44230 (April 19, 2001), 66 FR 21427 (April 30, 2001) (SR–Phlx–2001–10).

excepted from the 5,000 minimum order size requirements and to be executed in 100 share increments, with a minimum order size of 100 shares. The Phlx believes these changes in order and commitment size should encourage trading through the System by eliminating previously imposed order and commitment size restrictions. This aspect of the proposal is intended to codify expressly into the rule a previously implemented modification.[13] The Exchange believes that reflecting the size into the rule should make it more apparent to potential participants that smaller sizes are permissible, thereby potentially attracting new business.

The proposed rule change also makes minor technical amendments to Phlx Rule 237 to change the reference from stock to security to more accurately reflect the addition of ETFs and to replace a reference to UTS with eVWAP.

2. Statutory Basis

The Exchange believes the proposed rule change is consistent with Section 6 of the Act[14] in general, and in particular, with Section 6(b)(5),[15] in that it is designed to promote just and equitable principles of trade, and to remove impediments to and perfect the mechanism of a free and open market and a national market system by expanding the number of securities eligible for eVWAP trading and to codify order and commitment size requirements to promote trading activity.

B. Self-Regulatory Organization's Statement on Burden on Competition

The Phlx does not believe that the proposed rule change would impose any inappropriate burden on competition.

C. Self-Regulatory Organization's Statement on Comments on the Proposed Rule Change Received From Members, Participants, or Others

No written comments were either solicited or received.

III. Date of Effectiveness of the Proposed Rule Change and Timing for Commission Action

Within 35 days of the date of publication of this notice in the **Federal Register** or within such longer period (i) as the Commission may designate up to 90 days of such date if it finds such longer period to be appropriate and publishes its reasons for so finding, or (ii) as to which the Exchange consents, the Commission will:

(A) By order approve such proposed rule change; or

(B) Institute proceedings to determine whether the proposed rule change should be disapproved.

IV. Solicitation of Comments

Interested persons are invited to submit written data, views, and arguments concerning the foregoing, including whether the proposed rule change is consistent with the Act. Persons making written submissions should file six copies thereof with the Secretary, Securities and Exhange Commission, 450 Fifth Street, NW., Washington, DC 20549–0609. Copies of the submission, all subsequent amendments, all written statements with respect to the proposed rule change that are filed with the Commission, and all written communications relating to the proposed rule change between the Commission and any person, other than those that may be withheld from the public in accordance with the provisions of 5 U.S.C. 552, will be available for inspection and copying in the Commission's Public Reference Room. Copies of such filings will also be available for inspection and copying at the principal office of the Phlx. All submissions should refer to File No. SR–Phlx–2001–120 and should be submitted by February 22, 2002.

For the Commission, by the Division of Market Regulation, pursuant to delegated authority.[16]

Margaret H. McFarland,

Deputy Secretary.

[FR Doc. 02–2490 Filed 1–31–02; 8:45 am]

BILLING CODE 8010–01–P

[13] See footnote 10, supra.

[14] 15 U.S.C. 78f.

[15] 15 U.S.C. 78f(b)(5).

[16] 17 CFR 200.30–3(a)(12).

SOCIAL SECURITY ADMINISTRATION

Agency Information Collection Activities: Notice of Office of Management and Budget (OMB) Approval, Proposed Request and Comment Request

ACTION: Notice of OMB Approval

As required by the Paperwork Reduction Act of 1995 (44 U.S.C. 3507), the Social Security Administration (SSA) is providing notice of OMB's approval of the information collections in the final rule, Revised Medical Criteria for Determination of Disability, Musculoskeletal System and Related Criteria, part 404, subpart, appendix 1. In accordance with the Paperwork Reduction Act, persons are not required to respond to an information collection unless it displays a valid Office of Management and Budget control number. The OMB Number is 0960–0642, which expires December 31, 2004.

ACTION: Proposed Request and Comment Request

The Social Security Administration (SSA) publishes a list of information collection packages that will require clearance by the Office of Management and Budget (OMB) in compliance with Pub. L. 104–13 effective October 1, 1995, The Paperwork Reduction Act of 1995. SSA is soliciting comments on the accuracy of the agency's burden estimate; the need for the information; its practical utility; ways to enhance its quality, utility and clarity; and on ways to minimize burden on respondents, including the use of automated collection techniques or other forms of information technology.

Written comments and recommendations regarding the information collection(s) should be submitted to the OMB Desk Officer and the SSA Reports Clearance Officer and at the following addresses:

(OMB), Office of Management and Budget, Attn: Desk Officer for SSA, New Executive Office Building, Room 10230, 725 17th St., NW., Washington, DC 20503.

(SSA), Social Security Administration, DCFAM, Attn: Reports Clearance Officer, 1–A–21 Operations Bldg., 6401 Security Blvd., Baltimore, MD 21235.

I. The information collections listed below will be submitted to OMB within 60 days from the date of this notice. Therefore, your comments should be submitted to SSA within 60 days from the date of this publication. You can obtain copies of the collection instruments by calling the SSA Reports Clearance Officer at 410–965–0454, or by writing to the address listed above.

1. Employee Work Activity Report—0960–0483. The data collected by the Social Security Administration on Form SSA–3033 is reviewed and evaluated to determine if the claimant meets the disability requirements of the law, when the claimant returns to work after the alleged or established onset date of disability. When a possible unsuccessful work attempt or nonspecific subsidy is involved (and the information cannot be obtained through telephone contact), Form SSA–3033 will be used to request a description, by mail, of the employee's work effort. The respondents are employers of Old Age, Survivors and Disability Insurance and Supplemental

Security Income disability applicants and beneficiaries.

Number of Respondents: 12,500.

Frequency of Response: 1.

Average Burden Per Response: 15 minutes.

Estimated Annual Burden: 3,125 hours.

2. State Agency Ticket Assignment Form, SSA–1365, State Vocational Rehabilitation Ticket to Work Information Sheet, SSA–1366 and Individual Work Plans (IWP) Information Sheet, SSA–1367—0960–0641.

Background

Public Law (Pub. L.) 106–170, the Ticket to Work and Work Incentives Improvement Act of 1999, created a new Ticket to Work (TTW) program for providing work access services to SSA beneficiaries. The new program requires SSA to monitor the services provided under the Law. SSA has developed three data collection forms that request service provider and beneficiary information, which is essential to SSA's administration of this new program. Employment networks (ENs) providing TTW services under contracts with SSA are required to submit to SSA the information listed in form SSA–1367. State vocational rehabilitation agencies (VRAs) that provide services to SSA beneficiaries under either the traditional VR reimbursement mechanism or the new TTW program are required to submit to SSA the information listed in forms SSA–1365 and SSA–1366. SSA does not require that ENs or VRAs use forms SSA–1366 and SSA–1367 per se, but does require that any alternative forms submitted in place of these SSA forms include the SSA listed information at a minimum. VRAs are required to submit Form SSA–1365 in all cases as a means of assigning Tickets to VRAs.

a. State Agency Ticket Assignment Form—SSA–1365. The information collected on this form will be used by SSA's contracted Program Manager (PM) to perform the task of assigning beneficiaries' tickets and monitoring the use of tickets under the Ticket to Work and Self-Sufficiency Program. The State VRA answers the questions and the beneficiary reviews the data and if in agreement will sign the form acknowledging the Ticket assignment. The respondents are State VR agencies.

Number of Respondents: 21.

Frequency of Response: 4,048 annually per respondent.

Average Burden Per Response: 3 minutes.

Estimated Annual Burden: 4,250 hours.

b. State Vocational Rehabilitation Ticket to Work Information Sheet-SSA–1366. The information collected on Form SSA–1366 will be used by SSA's contracted PM when a State VRA elects to participate in the Program as an EN. In this case, form SSA–1366, when combined with the SSA–1365, is intended to meet the minimum information requirements for IWPs and to monitor the appropriateness of the IWPs as required under the Pub. L. 106–107. The respondents are VRAs acting as ENs under the Ticket to Work Program.

Number of Respondents: 21.

Frequency of Response: 132 annually per respondent.

Average Burden Per Response: 2 minutes.

Estimated Annual Burden: 92 hours.

Please Note: The Ticket to Work Program is being implemented in stages. The above represents the initial phase of the program with 13 participating states that include 21 State VR agencies. As the program continues to be phased in, each initial program year will result in a larger number of new tickets for the participating State VRs because existing clients will also be brought into the program.

c. Individual Work Plans (IWP) Information Sheet-SSA–1367. The information collected on Form SSA–1367 will be used to monitor the appropriateness of IWPs that have been assigned to ENs under the TTW program. The respondents are ENs under the TTW program.

Number of Respondents: 31,450.

Frequency of Response: 1 annually per respondent.

Average Burden Per Response: 3 minutes.

Estimated Annual Burden: 1,573 hours.

4. Statement Regarding the Inferred Death of an Individual By Reason of Continued and Unexplained Absence—0960–0002. The information collected on Form SSA–723–F4 is needed to determine if SSA may presume that a missing wage earner is dead and, if so, to establish a date of presumed death. The respondents are people who have knowledge of the disappearance of the wage earner.

Number of Respondents: 3,000.

Frequency of Response: 1.

Average Burden Per Response: 30 minutes.

Estimated Annual Burden: 1,500 hours.

II. The information collections listed below have been submitted to OMB for clearance. Your comments on the information collections would be most useful if received by OMB and SSA within 30 days from the date of this publication. You can obtain a copy of the OMB clearance package by calling the SSA Reports Clearance Officer on (410) 965–0454, or by writing to the address listed above.

1. Information Collections Conducted by State Disability Determination Services (DDS) on Behalf of SSA—0960–0555. The State DDS's collect certain information to administer SSA's disability program. The information collected is as follows: (1) Medical evidence of record (MER)—DDS's use MER information to determine a person's physical and/or mental status prior to making a disability determination; (2) consultative exam (CE) medical evidence—DDS's use CE medical evidence to make disability determinations when the claimant's own medical sources cannot or will not provide the information; (3) CE claimant forms—The DDS's request that claimants complete an authorization form for the release of consultative exam information to a personal physician and to complete an appointment form to confirm scheduled CE appointments; (4) CE provider information—DDS's use the CE provider information to verify medical providers' credentials and licenses before hiring them to conduct CEs; (5) activities of daily living (ADL)—this information and other medical evidence are part of the evidentiary documentation used by the DDS's in evaluating a person's disability; and (6) pain information—this information is used by the DDS's to assess the effects of symptoms on functioning for determining disability. The respondents are medical providers, other sources of MER and disability claimants.

(1) MER (respondents-medical providers and other sources)

Number of Responses: 6,052,494.

Frequency of Response: Unknown.

Average Burden Per Response: 15 minutes.

Estimate Annual Burden: 1,513,124.

(2) CE Medical Evidence (respondents-medical providers)

Number of Responses: 1,640,269.

Frequency of Response: Unknown.

Average Burden Per Response: 30 minutes.

Estimated Annual Burden: 820,135 hours.

(3) CE Forms (respondents-claimants)

	Appointment form	Medical release
Number of Respondents	820,134	1,640,269.
Frequency of Response	1	1.
Average Burden Per Response	5 minutes	5 minutes.
Estimated Annual Burden	68,345 hours	136,689 hours.

(4) CE Providers (respondents-medical providers)

Number of Responses: 3,000.
Frequency of Response: 1.
Average Burden: 20 minutes.
Estimated Annual Burden: 1,000 hours.

(5) ADL (respondents-claimants)

Number of Responses: 2,000,000.
Frequency of Response: 1.
Average Burden Per Response: 15 minutes.
Estimated Annual Burden: 500,000 hours.

(6) Pain (respondents-claimants)

Number of Responses: 1,000,000.
Frequency of Response: 1.
Average Burden Per Response: 15 minutes.
Estimated Average Burden: 250,000 hours.

2. Application for U.S. Benefits Under the Canada-U.S. International Agreement—0960–0371. The information collected on Form SSA–1294 is used to determine entitlement to benefits. The respondents are individuals who live in Canada and file for U.S. Social Security benefits.
Number of Respondents: 1,000.
Frequency of Response: 1.
Average Burden Per Response: 15 minutes.
Estimated Annual Burden: 250 hours.

3. Statement of Death by Funeral Director—0960–0142. The Social Security Administration (SSA) uses the information on form SSA–721 to make timely and accurate decisions based on a report of death. The respondents are funeral directors with knowledge of the fact of death.
Number of Respondents: 1,059,400.
Frequency of Response: 1.
Average Burden Per Response: 4 minutes.
Estimated Annual Burden: 70,627 hours.

4. Statement Regarding Marriage—0960–0017. Form SSA–753 elicits information from third parties to verify the applicant's statements about intent, cohabitation, and holding out to the public as being married, which are the basic tenets of a common-law marriage. The responses are used by SSA to determine if a valid marital relationship exists and to make an accurate determination regarding entitlement to spouse/widow(er) benefits. The respondents are individuals who are familiar with and can provide confirmation of an applicant's common-law marriage.
Number of Respondents: 40,000.
Frequency of Response: 1.
Average Burden Per Response: 9 minutes.
Estimated Annual Burden: 6,000.

5. Quarterly Statistical Report on Recipients and Payments Under State-Administered Assistance Programs for Aged, Blind, and Disabled (Individuals and Couples) Recipients—0960–0130. The information collected by SSA on Form SSA–9741 is used by States to provide statistical data on recipients and assistance payments under the SSI State-administered State Supplementation Programs. The data are needed to complement information available for the programs administered by SSA and to fully explain the impact of the public income support programs on the needy, aged, blind, and disabled. SSA personnel request data about State-administered supplementation programs to compare various State programs, to examine the relationship of State supplementation expenditures and caseloads to federally-financed programs such as Medicaid, and to determine the effect of changes in SSI and other Federal programs on State supplementation programs. The respondents are State agencies who administer supplementary payment programs under SSI.
Number of Respondents: 30.
Frequency of Response: 4.
Average Burden Per Response: 60 minutes.
Estimated Annual Burden: 120 hours.

Dated: January 28, 2002.

Elizabeth A. Davidson,

Acting Reports Clearance Officer, Social Security Administration.

[FR Doc. 02–2429 Filed 1–31–02; 8:45 am]

BILLING CODE 4191–02–U

DEPARTMENT OF STATE

[Public Notice 3903]

Culturally Significant Objects Imported for Exhibition Determinations: ''Central European Avant-Gardes: Exchange and Transformation, 1910–1930''

AGENCY: Department of State.

ACTION: Notice.

SUMMARY: Notice is hereby given of the following determinations: Pursuant to the authority vested in me by the Act of October 19, 1965 (79 Stat. 985; 22 U.S.C. 2459), Executive Order 12047 of March 27, 1978, the Foreign Affairs Reform and Restructuring Act of 1998 (112 Stat. 2681, *et seq.*; 22 U.S.C. 6501 note, *et seq.*), Delegation of Authority No. 234 of October 1, 1999, and Delegation of Authority No. 236 of October 19, 1999, as amended, I hereby determine that the objects to be included in the exhibition: ''Central European Avant-Gardes: Exchange and Transformation, 1910–1930,'' imported from abroad for temporary exhibition within the United States, are of cultural significance. The objects are imported pursuant to loan agreements with the foreign owners. I also determine that the exhibition or display of the exhibit objects at the Los Angeles County Museum of Art, Los Angeles, CA, from on or about March 10, 2002, to on or about June 2, 2002, and at possible additional venues yet to be determined, is in the national interest. Public Notice of these Determinations is ordered to be published in the **Federal Register**.

FOR FURTHER INFORMATION CONTACT: For further information, including a list of the exhibit objects, contact Julianne Simpson, Attorney-Adviser, Office of the Legal Adviser, U.S. Department of State, (telephone: 202/619–6529). The address is U.S. Department of State, SA–44, 301 4th Street, SW., Room 700, Washington, DC 20547–0001.

Dated: January 29, 2002.

Patricia S. Harrison,

Assistant Secretary for Educational and Cultural Affairs, Department of State.

[FR Doc. 02–2606 Filed 1–31–02; 8:45 am]

BILLING CODE 4710–08–Pse

DEPARTMENT OF STATE

[Public Notice 3902]

Culturally Significant Objects Imported for Exhibition Determinations: ''Tapestry in the Renaissance: Art and Magnificence''

DEPARTMENT: United States Department of State.

ACTION: Notice.

SUMMARY: Notice is hereby given of the following determinations: Pursuant to the authority vested in me by the Act of October 19, 1965 [79 Stat. 985; 22 U.S.C. 2459], Executive Order 12047 of March 27, 1978, the Foreign Affairs Reform and Restructuring Act of 1998 [112 Stat. 2681, *et seq.*; 22 U.S.C. 6501 note, *et seq.*], Delegation of Authority No. 234 of October 1, 1999 [64 FR 56014], and Delegation of Authority No. 236 of October 19, 1999 [64 FR 57920], as amended, I hereby determine that the objects to be included in the exhibition, ''Tapestry in the Renaissance: Art and Magnificence,'' imported from abroad for temporary exhibition within the United States, are of cultural significance. These objects are imported pursuant to loan agreements with the foreign lenders. I also determine that the exhibition or display of the exhibit objects at the Metropolitan Museum of Art, New York, New York, from on or about March 11, 2002, to on or about June 19, 2002, and at possible additional venues yet to be determined, is in the national interest. Public Notice of these determinations is ordered to be published in the **Federal Register**.

FOR FURTHER INFORMATION CONTACT: For further information, including a list of exhibit objects, contact Paul W. Manning, Attorney-Adviser, Office of the Legal Adviser, 202/619–5997, and the address is United States Department of State, SA–44, Room 700, 301 4th Street, SW., Washington, DC 20547–0001.

Dated: January 17, 2002.

Brian J. Sexton,

Acting Assistant Secretary for Educational and Cultural Affairs, Department of State.

[FR Doc. 02–2547 Filed 1–31–02; 8:45 am]

BILLING CODE 4710–08–U

TENNESSEE VALLEY AUTHORITY

Paperwork Reduction Act of 1995, as Amended by Public Law 104–13; Proposed Collection, Comment Request

AGENCY: Tennessee Valley Authority.

ACTION: Proposed collection; comment request.

SUMMARY: The proposed information collection described below will be submitted to the Office of Management and Budget (OMB) for review, as required by the Paperwork Reduction Act of 1995 (44 U.S.C. Chapter 35, as amended). The Tennessee Valley Authority is soliciting public comments on this proposed collection as provided by 5 CFR section 1320.8(d)(1). Requests for information, including copies of the information collection proposed and supporting documentation, should be directed to the Agency Clearance Officer: Wilma H. McCauley, Tennessee Valley Authority, 1101 Market Street (EB 5B), Chattanooga, Tennessee 37402–2801; (423) 751–2523.

Comments should be sent to the Agency Clearance Officer no later than April 2, 2002.

SUPPLEMENTARY INFORMATION:

Type of Request: Regular submission, proposal to extend without revision a currently approved collection of information (OMB control number 3316–0104).

Title of Information Collection: Economic Assessment of Waterway Docks and Terminals in the Tennessee Valley and Parts of the Surrounding National Inland Waterway Network.

Frequency of Use: Occasional.

Type of Affected Public: Federal, State and Local Governments, and Private Industry.

Small Businesses or Organizations Affected: Yes.

Federal Budget Functional Category Code: 450.

Estimated Number of Annual Responses: 1700.

Estimated Total Annual Burden Hours: 3400 hours.

Estimated Average Burden Hours Per Response: 2 hours.

Need For and Use of Information: The information collection is necessary to assess the service capability of waterway docks and terminals located in the Tennessee Valley and surrounding States. The data will be used to help potential industrial clients with decisions regarding transportation information and the handling capabilities of waterway facilities located on various river segments. This is vital information for industry when deciding on the most economical location for a new plant site or project. In addition, the data collection surrounding the waterway terminals located on the Tennessee River is necessary for use in updating TVA's river performance indicator.

Jacklyn J. Stephenson,

Senior Manager, Enterprise Operations, Information Services.

[FR Doc. 02–2462 Filed 1–31–02; 8:45 am]

BILLING CODE 8120–08–P

DEPARTMENT OF TRANSPORTATION

Coast Guard

[CGD08–01–054]

Notice of Public Hearing on Vancouver Railroad Bridge Across the Columbia River, Mile 105.6, at Vancouver, WA

AGENCY: Coast Guard, DOT.

ACTION: Notice of public hearing.

SUMMARY: The Coast Guard will hold a public hearing to receive comments concerning the alteration of the Vancouver Railroad Bridge at Vancouver, Washington. The hearing will allow interested persons to present comments and information concerning the unreasonably obstructive nature of the bridge.

DATES: The hearing will be held on March 5, 2002, commencing at 6:30 p.m. Comments must be received by February 15, 2002. Requests to speak must be received in the Office of Bridge Administration at the address given under **ADDRESSES** by February 15, 2002.

ADDRESSES: The hearing will be held in the Commission Room, Port of Portland, 121 NW Everett, Portland, Oregon 97209.

Written comments may be submitted to, and will be available for examination between 8 a.m. to 4 p.m., Monday through Friday, except Federal holidays, at the office of the Commander Eighth Coast Guard District (obr), Bridge Administration Branch, 1222 Spruce Street, St. Louis, MO 63103–2832. Please submit all comments in an unbound format, no larger than 8 x 11 inches, suitable for copying and electronic filing. Persons wanting acknowledgement of receipt of comments should enclose a stamped, self-addressed postcard or envelope.

FOR FURTHER INFORMATION CONTACT: Mr. Roger K. Wiebusch, Bridge Administrator, telephone (314) 539–3900 extension 378.

SUPPLEMENTARY INFORMATION:

Background

Complaints have been received alleging that the bridge is unreasonably obstructive to navigation. Information available to the Coast Guard indicates two bridge allisions have occurred and numerous other bridge allisions have been narrowly avoided between 1991 and 2000. The navigation opening of the bridge is 200 feet. The Vancouver Railroad Bridge is located 0.8 mile downstream from the I–5 Highway Bridge. The highway bridge influences the approach of vessels to the navigation span of the railroad bridge. Based on the

comments received at the public hearing, the bridge may be found to be unreasonably obstructive to navigation. Such a finding may require relocating and increasing the horizontal clearance of the railroad bridge to meet the needs of navigation.

Procedural

Any person, who wishes, may appear and be heard at this public hearing. Individuals and representatives of organizations that wish to present testimony at the hearing may submit a request to this office at the address listed under **ADDRESSES** clearly indicating name and organization represented. Requests to speak should be received no later than February 15, 2002 in order to ensure proper scheduling for the hearing. Depending on the number of scheduled statements, it may be necessary to limit the amount of time allocated to each person. Any limitation of time allocated will be announced at the beginning of the hearing. Written statements and other exhibits may be submitted in lieu of, or in addition to, oral statements made at the hearing, and may be submitted to this office at the address listed under **ADDRESSES** until February 15, 2002, for inclusion in the public hearing transcript. Transcripts of the hearing will be made available for purchase upon request.

Information on Services for Individuals With Disabilities

For information about facilities or services for individuals with disabilities or to request special assistance at the meeting, contact Commander, Eighth Coast Guard District (obr). Please request these services by contacting this office at the phone number under **FOR FURTHER INFORMATION CONTACT** or in writing at the address listed under **ADDRESSES**. Any requests for an oral or sign language interpreter must be received by February 15, 2002.

Authority: 33 U.S.C. 513; 49 CFR 1.46.

Dated: January 2, 2002.

J.R. Whitehead,

Captain, U.S. Coast Guard, Commander, 8th Coast Guard Dist., Acting.

[FR Doc. 02–2544 Filed 1–31–02; 8:45 am]

BILLING CODE 4910–15–P

DEPARTMENT OF TRANSPORTATION

Federal Aviation Administration

Advisory Circular 23.143–1, Ice Contaminated Tailplane Stall (ICTS)

AGENCY: Federal Aviation Administration (FAA), DOT.

ACTION: Notice of availability of Advisory Circular 23.143–1, Ice Contaminated Tailplane Stall (ICTS).

SUMMARY: This notice announces the availability of Advisory Circular 23.143–1, Ice Contaminated Tailplane Stall (ICTS), which provides information and guidance concerning ice contaminated tailplane stall.

FOR FURTHER INFORMATION CONTACT: Paul Pellicano, Aerospace Engineer, FAA, Atlanta Aircraft Certification Office, One Crown Center, 1895 Phoenix Boulevard, suite 450, Atlanta, Georgia 30349; telephone: (770) 703–6064; facsimile: (770) 703–6097.

SUPPLEMENTARY INFORMATION:

Discussion

You may download a copy from the FAA Web site at *http://www.faa.gov/certification/ aircraft/small_airplane_directorate_news_latest.html*, or request a copy by contacting the person named above under **FOR FURTHER INFORMATION CONTACT**.

This advisory circular (AC) sets forth an acceptable means, but not the only means, of demonstrating compliance with the longitudinal (pitch) axis flight characteristics requirements of Title 14 of the Code of Federal Regulations (14 CFR) part 23 when ice has accreted on the airframe. The FAA developed this AC to give more detailed and uniform guidance in showing compliance with the control and maneuver requirements of section 23.143.

Issued in Kansas City, Missouri on January 23, 2002.

Michael K. Dahl,

Acting Manager, Small Airplane Directorate, Aircraft Certification Service.

[FR Doc. 02–2537 Filed 1–31–02; 8:45 am]

BILLING CODE 4910–13–P

DEPARTMENT OF TRANSPORTATION

Federal Aviation Administration

[Summary Notice No. PE–2001–98]

Petitions for Exemption; Summary of Petitions Received

AGENCY: Federal Aviation Administration (FAA), DOT.

ACTION: Notice of petitions for exemption received.

SUMMARY: Pursuant to FAA's rulemaking provisions governing the application, processing, and disposition of petitions for exemption part 11 of Title 14, Code of Federal Regulations (14 CFR), this notice contains a summary of certain petitions seeking relief from specified requirements of 14 CFR. The purpose of this notice is to improve the public's awareness of, and participation in, this aspect of FAA's regulatory activities. Neither publication of this notice nor the inclusion or omission of information in the summary is intended to affect the legal status of any petition or its final disposition.

DATES: Comments on petitions received must identify the petition docket number involved and must be received on or before February 21, 2002.

ADDRESSES: Send comments on any petition on the Docket Management System, U.S. Department of Transportation, Room Plaza 401, 400 Seventh Street, SW., Washington, DC 20590–0001. You must identify the docket number FAA–2000–XXXX at the beginning of your comments. If you wish to receive confirmation that FAA received your comments, include a self-addressed, stamped postcard.

You may also submit comments through the Internet to *http://dms.dot.gov.* You may review the public docket containing the petition, any comments received, and any final disposition in person in the Dockets Office between 9 a.m. to 5 p.m., Monday through Friday, except Federal holidays. The Dockets Office (telephone 1–800–647–5527) is on the plaza level of the NASSIF Building at the Department of Transportation at the above address. Also, you may review public dockets on the Internet at *http://dms.dot.gov.*

FOR FURTHER INFORMATION CONTACT: Forest Rawls (202) 267–8033, Sandy Buchanan-Sumter (202) 267–7271, or Vanessa Wilkins (202) 267–8029, Office of Rulemaking (ARM–1), Federal Aviation Administration, 800 Independence Avenue, SW., Washington, DC 20591.

This notice is published pursuant to 14 CFR 11.85 and 11.91.

Issued in Washington, DC, on January 18, 2002.

Donald P. Byrne,

Assistant Chief Counsel for Regulations.

Petitions for Exemption

Docket No: FAA–2001–11134.

Petitioner: Lufthansa Technik AG.

Section of 14 CFR Affected: 14 CFR 25.785(j).

Description of Relief Sought: To allow Lufthansa Technik to configure the Boeing Model 737–800 airplane for private, not-for-hire use and be exempted, in the configuration of the interior areas specified as the ''Private Bedroom'' and the ''First Class'' sections, from the requirement for a ''firm handhold along each aisle.''

[FR Doc. 02–2541 Filed 1–31–02; 8:45 am]

BILLING CODE 4910–13–M

DEPARTMENT OF TRANSPORTATION

Federal Aviation Administration

[Summary Notice No. PE–2002–08]

Petitions for Exemption; Summary of Petition Received

AGENCY: Federal Aviation Administration (FAA), DOT.

ACTION: Notice of petition for exemption received.

SUMMARY: Pursuant to FAA's rulemaking provisions governing the application, processing, and disposition of petitions for exemption part 11 of Title 14, Code of Federal Regulations (14 CFR), this notice contains a summary of a petition seeking relief from specified requirements of 14 CFR. The purpose of this notice is to improve the public's awareness of, and participation in, this aspect of FAA's regulatory activities. Neither publication of this notice nor the inclusion or omission of information in the summary is intended to affect the legal status of any petition or its final disposition.

DATES: Comments on petitions received must identify the petition docket number involved and must be received on or before February 6, 2002.

ADDRESSES: Send comments on any petition to the Docket Management System, U.S. Department of Transportation, Room Plaza 401, 400 Seventh Street, SW., Washington, DC 20590–0001. You must identify the docket number FAA–2002–11355 at the beginning of your comments. If you wish to receive confirmation that FAA received your comments, include a self-addressed, stamped postcard.

You may also submit comments through the Internet to *http://dms.dot.gov.* You may review the public docket containing the petition, any comments received, and any final disposition in person in the Dockets Office between 9 a.m. and 5 p.m., Monday through Friday, except Federal holidays. The Dockets Office (telephone 1–800–647–5527) is on the plaza level of the NASSIF Building at the Department of Transportation at the above address. Also, you may review public dockets on the Internet at http://dms.dot.gov.

FOR FURTHER INFORMATION CONTACT: Denise Emrick (202) 267–5174, Office of Rulemaking (ARM–1), Federal Aviation Administration, 800 Independence Avenue, SW., Washington, DC 20591.

This notice is published pursuant to 14 CFR 11.85 and 11.91.

Issued in Washington, DC, on January 29, 2002.

Donald P. Byrne,

Assistant Chief Counsel for Regulations.

Petitions for Exemption

Docket No.: FAA–2002–11355.

Petitioner: Embry-Riddle Aeronautical University.

Section of 14 CFR Affected: 14 CFR 61.71(a).

Description of Relief Sought: To permit Embry-Riddle to consider two students to have met the aeronautical experience, aeronautical knowledge, and areas of operation requirements of part 61 although the students were not able to pass the practical test within 60 days of graduation due to September 11, 2001, flight restrictions.

[FR Doc. 02–2542 Filed 1–31–02; 8:45 am]

BILLING CODE 4910–13–M

DEPARTMENT OF TRANSPORTATION

Federal Aviation Administration

Request for Comment on Proposed Designated Alteration Station Program Limitations

AGENCY: Federal Aviation Administration, DOT

ACTION: Notice of availability and request for comments.

SUMMARY: The Federal Aviation Administration requests public comment on its intent to manage more closely certain Designated Alteration Station (DAS) activities, specifically off-site DAS prototype installations. The intended guidance also documents the roles and responsibilities of parties involved in the DAS Supplemental Type Certification (STC) process. It is written for the Aircraft Certification (AIR) and Flight Standards (AFS) Services and companies authorized as Designated Alteration Stations (DAS).

DATES: Comments must be received on or before March 4, 2002.

ADDRESSES: Comments on this proposal should be mailed or delivered in duplicate to Ralph Meyer, Delegation and Airworthiness Programs Branch, AIR–140, Aircraft Certification Service, Federal Aviation Administration, P.O. Box 25082, Oklahoma City, OK 73125.

FOR FURTHER INFORMATION CONTACT: Ralph Meyer, telephone (405) 954–7072. Or, you may send an e-mail to *ralph.meyer@faa.gov.*

SUPPLEMENTARY INFORMATION:

Comments Invited

The proposed notice will be available on the World Wide Web at *http://av-info.faa.gov/dst/dasnotice.htm.* Interested persons may comment on it by submitting written data, views or arguments. Commentors must identify the proposed notice by subject, and submit comments to the address specified above. The FAA will consider all communications received on or before the closing date for comments.

Discussion

Background and discussion of the proposed policy are provided in the draft notice. Comments should identify the following:

(1) The impact on existing DAS business, including identification of typical STC projects that could not be performed, and changes to business practices that would be necessary under this proposal.

(2) The need for clarification of any portion of this proposal.

(3) Suggested additions or alternatives to this proposal that, in the commentator's opinion, would meet the intent of the policy.

Issued in Washington, DC on January 7, 2002.

Ronald T. Wojnar,

Acting Director, Aircraft Certification Service.

[FR Doc. 02–2540 Filed 1–31–02; 8:45 am]

BILLING CODE 4910–13–M

DEPARTMENT OF TRANSPORTATION

Surface Transportation Board

[STB Ex Parte No. 290 (Sub No. 4)]

Railroad Cost Recovery Procedures—Productivity Adjustment

AGENCY: Surface Transportation Board.

ACTION: Proposed adoption of a Railroad Cost Recovery Procedures productivity adjustment.

SUMMARY: The Surface Transportation Board proposes to adopt 1.042 (4.2%) as the measure of average change in railroad productivity for the 1996–2000 (5-year) period. The current value of 2.8% was developed for the 1995 to 1999 period.

DATES: Comments are due by February 16, 2002.

EFFECTIVE DATE: The proposed productivity adjustment is effective 30 days after the date of service.

ADDRESSES: Send comments (an original and 10 copies) referring to STB Ex Parte No. 290 (Sub-No. 4) to: Office of the Secretary, Case Control Branch, 1925 K Street, NW, Washington, DC 20423–0001. Parties should submit all pleading and attachments on a 3.5-inch diskette in WordPerfect 6.0 or 6.1 compatible format.

FOR FURTHER INFORMATION CONTACT: H. Jeff Warren, (202) 565–1533. Federal Information Relay Service (FIRS) for the hearing impaired: 1–800–877–8339.

SUPPLEMENTARY INFORMATION: Additional information is contained in the Board's decision, which is available on our Web site, *www.stb.dot.gov*. To purchase a copy of the full decision, write to, call, or pick up in person from the Board's contractor, Dã-To-Dã Legal, Suite 405, 1925 K Street, NW, Washington, DC 20006, phone (202) 293–7776. [Assistance for the hearing impaired is available through FIRS: 1–800–877–8339.]

This action will not significantly affect either the quality of the human environment or energy conservation.

Pursuant to 5 U.S.C. 605(b), we conclude that our action will not have a significant economic impact on a substantial number of small entities within the meaning of the Regulatory Flexibility Act.

Decided: January 25, 2002.

By the Board, Chairman Morgan, Vice Chairman Burkes.

Vernon A. Williams,

Secretary.

[FR Doc. 02–2521 Filed 1–31–02; 8:45 am]

BILLING CODE 4915–00–P

DEPARTMENT OF THE TREASURY

Fiscal Service

Application and Renewal Fees Imposed on Surety Companies and Reinsuring Companies; Change in Fees Imposed

AGENCY: Financial Management Service, Fiscal Service, Department of the Treasury.

ACTION: Application and renewal fees imposed on surety companies and reinsuring companies; change in fees imposed

SUMMARY: Effective December 31, 2001, the Department of the Treasury, Financial Management Service, is changing the fees it imposes on and collects from surety companies and reinsuring companies.

FOR FURTHER INFORMATION CONTACT: Surety Bond Branch (202) 874–6765.

SUPPLEMENTARY INFORMATION: The fees imposed and collected, as referred to in 31 CFR 223.22, cover the costs incurred by the Government for services performed relative to qualifying corporate sureties to write Federal business. These fees are determined in accordance with the Office of Management and Budget Circular A–25, as amended. The change in fees is the result of a thorough analysis of costs associated with the Surety Bond Branch.

The new fee rate schedule is as follows:

(1) Examination of a company's application for a Certificate of Authority as an acceptable surety or as an acceptable reinsuring company on Federal bonds—$4,705.

(2) Determination of a company's continued qualification for annual renewal of its Certificate of Authority—$2,755.

(3) Examination of a company's application for recognition as an Admitted Reinsurer (except on excess risks running to the United States)—$1,665.

(4) Determination of a company's continued qualification for annual renewal of its authority as an Admitted Reinsurer—$1,175.

Questions concerning this notice should be directed to the Surety Bond Branch, Financial Accounting and Services Division, Financial Management Service, Department of the Treasury, Hyattsville, MD 20782, Telephone (202) 874–6850.

Dated: January 24, 2002.

Wanda J. Rogers,

Acting Assistant Commissioner, Financial Operations, Financial Management Service.

[FR Doc. 02–2502 Filed 1–31–02; 8:45 am]

BILLING CODE 4810–35–M

DEPARTMENT OF THE TREASURY

Internal Revenue Service

Proposed Collection; Comment Request for Form 8050

AGENCY: Internal Revenue Service (IRS), Treasury.

ACTION: Notice and request for comments.

SUMMARY: The Department of the Treasury, as part of its continuing effort to reduce paperwork and respondent burden, invites the general public and other Federal agencies to take this opportunity to comment on proposed and/or continuing information collections, as required by the Paperwork Reduction Act of 1995, Public Law 104–13 (44 U.S.C. 3506(c)(2)(A)). Currently, the IRS is soliciting comments concerning Form 8050, Direct Deposit of Corporate Tax Refund.

DATES: Written comments should be received on or before April 2, 2002, to be assured of consideration.

ADDRESSES: Direct all written comments to George Freeland, Internal Revenue Service, room 5577, 1111 Constitution Avenue NW., Washington, DC 20224.

FOR FURTHER INFORMATION CONTACT: Requests for additional information or copies of the form and instructions should be directed to Carol Savage, (202) 622–3945, or through the internet (*CAROL.A.SAVAGE@irs.gov.*), Internal Revenue Service, room 5242, 1111 Constitution Avenue NW., Washington, DC 20224.

SUPPLEMENTARY INFORMATION:

Title: Direct Deposit of Corporate Tax Refund.

OMB Number: 1545–1762.

Form Number: 8050.

Abstract: Form 8050 is used to request that the IRS deposit a tax refund of ($1 million or more) directly into an account at any U.S. bank or other financial institution (such as a mutual fund, credit union, or brokerage firm) that accepts direct deposits.

Current Actions: There are no changes being made to the form at this time.

Type of Review: Extension of a currently approved collection.

Affected Public: Business or other for-profit organizations, and individuals or households.

Estimated Number of Respondents: 210,000.

Estimated Time Per Respondent: 1 hour, 40 minutes.

Estimated Total Annual Burden Hours: 348,600.

The following paragraph applies to all of the collections of information covered by this notice: An agency may not conduct or sponsor, and a person is not required to respond to, a collection of information unless the collection of information displays a valid OMB control number. Books or records relating to a collection of information must be retained as long as their contents may become material in the administration of any internal revenue law. Generally, tax returns and tax return information are confidential, as required by 26 U.S.C. 6103.

Request for Comments

Comments submitted in response to this notice will be summarized and/or included in the request for OMB approval. All comments will become a matter of public record. Comments are invited on: (a) Whether the collection of information is necessary for the proper performance of the functions of the agency, including whether the information shall have practical utility; (b) the accuracy of the agency's estimate of the burden of the collection of information; (c) ways to enhance the quality, utility, and clarity of the information to be collected; (d) ways to

minimize the burden of the collection of information on respondents, including through the use of automated collection techniques or other forms of information technology; and (e) estimates of capital or start-up costs and costs of operation, maintenance, and purchase of services to provide information.

Approved: January 28, 2002.

George Freeland,

IRS Reports Clearance Officer.

[FR Doc. 02–2534 Filed 1–31–02; 8:45 am]

BILLING CODE 4830–01–P

DEPARTMENT OF THE TREASURY

Internal Revenue Service

Proposed Collection; Comment Request for Revenue Procedure 2002–15

AGENCY: Internal Revenue Service (IRS), Treasury.

ACTION: Notice and request for comments.

SUMMARY: The Department of the Treasury, as part of its continuing effort to reduce paperwork and respondent burden, invites the general public and other Federal agencies to take this opportunity to comment on proposed and/or continuing information collections, as required by the Paperwork Reduction Act of 1995, Public Law 104–13 (44 U.S.C. 3506(c)(2)(A)). Currently, the IRS is soliciting comments concerning Revenue Procedure 2002–15, Automatic Relief for Late Initial Entity Classification Elections—Check the Box.

DATES: Written comments should be received on or before April 2, 2002, to be assured of consideration.

ADDRESSES: Direct all written comments to George Freeland, Internal Revenue Service, room 5577, 1111 Constitution Avenue NW., Washington, DC 20224.

FOR FURTHER INFORMATION CONTACT: Requests for additional information or copies of the revenue procedure should be directed to Carol Savage, (202) 622–3945, or through the internet *(CAROL.A.SAVAGE@irs.gov.),* Internal Revenue Service, room 5242, 1111 Constitution Avenue NW., Washington, DC 20224.

SUPPLEMENTARY INFORMATION:

Title: Automatic Relief for Late Initial Entity Classification Elections—Check the Box.

OMB Number: 1545–1771.

Revenue Procedure Number: Revenue Procedure 2002–15.

Abstract: Revenue Procedure 2002–15 provides that, in certain circumstances, taxpayers whose initial entity classification election was filed late can obtain relief by filing Form 8832 and attaching a statement explaining that the requirements of the revenue procedure have been met.

Current Actions: There are no changes being made to the revenue procedure at this time.

Type of Review: Extension of a currently approved collection.

Affected Public: Business or other for-profit organizations.

Estimated Number of Respondents: 100.

Estimated Time Per Respondent: 1 hour.

Estimated Total Annual Burden Hours: 100.

The following paragraph applies to all of the collections of information covered by this notice:

An agency may not conduct or sponsor, and a person is not required to respond to, a collection of information unless the collection of information displays a valid OMB control number. Books or records relating to a collection of information must be retained as long as their contents may become material in the administration of any internal revenue law. Generally, tax returns and tax return information are confidential, as required by 26 U.S.C. 6103.

Request for Comments

Comments submitted in response to this notice will be summarized and/or included in the request for OMB approval. All comments will become a matter of public record. Comments are invited on: (a) Whether the collection of information is necessary for the proper performance of the functions of the agency, including whether the information shall have practical utility; (b) the accuracy of the agency's estimate of the burden of the collection of information; (c) ways to enhance the quality, utility, and clarity of the information to be collected; (d) ways to minimize the burden of the collection of information on respondents, including through the use of automated collection techniques or other forms of information technology; and (e) estimates of capital or start-up costs and costs of operation, maintenance, and purchase of services to provide information.

Approved: January 28, 2002.

George Freeland,

IRS Reports Clearance Officer.

[FR Doc. 02–2535 Filed 1–31–02; 8:45 am]

BILLING CODE 4830–01–P

Federal Register

Friday,
February 1, 2002

Part II

Reader Aids

Cumulative List of Public Laws 107th Congress, First Session

CUMULATIVE LIST OF PUBLIC LAWS

This is the cumulative list of public laws for the 107th Congress, First Session. Other cumulative lists (1993–2001) are available online at http://www.nara.gov/fedreg/plawcurr.html. Comments may be addressed to the Director, Office of the Federal Register, Washington, DC 20408 or send e-mail to info@nara.fedreg.gov.

The text of laws may be ordered in individual pamphlet form (referred to as ''slip laws'') from the Superintendent of Documents, U.S. Government Printing Office, Washington, DC 20402 (phone, 202–512–2470). The text will also be made available on the Internet from GPO Access at http://www.acess.gpo.gov/nara/nara005.html. Some laws may not yet be available online or for purchase.

Public Law	Title	Approved	115 Stat.
107–1	Recognizing the 90th birthday of Ronald Reagan	Feb. 15, 2001	3
107–2	To designate the United States courthouse located at 1 Courthouse Way in Boston, Massachusetts, as the ''John Joseph Moakley United States Courthouse''.	Mar. 13, 2001	4
107–3	Affecting the representation of the majority and minority membership of the Senate Members of the Joint Economic Committee.	Mar. 13, 2001	5
107–4	Providing for the appointment of Walter E. Massey as a citizen regent of the Board of Regents of the Smithsonian Institution.	Mar. 16, 2001	6
107–5	Providing for congressional disapproval of the rule submitted by the Department of Labor under chapter 8 of title 5, United States Code, relating to ergonomics.	Mar. 20, 2001	7
107–6	To designate the facility of the United States Postal Service located at 620 Jacaranda Street in Lanai City, Hawaii, as the ''Goro Hokama Post Office Building''.	Apr. 12, 2001	8
107–7	To designate the facility of the United States Postal Service located at 2305 Minton Road in West Melbourne, Florida, as the ''Ronald W. Reagan Post Office of West Melbourne, Florida''.	Apr. 12, 2001	9
107–8	To extend for 11 additional months the period for which chapter 12 of title 11 of the United States Code is reenacted.	May 11, 2001	10
107–9	Animal Disease Risk Assessment, Prevention, and Control Act of 2001	May 24, 2001	11
107–10	Concerning the participation of Taiwan in the World Health Organization	May 28, 2001	17
107–11	To expedite the construction of the World War II memorial in the District of Columbia	May 28, 2001	19
107–12	Public Safety Officer Medal of Valor Act of 2001	May 30, 2001	20
107–13	To authorize the Secretary of the Interior and the Secretary of Agriculture to use funds appropriated for wildland fire management in the Department of the Interior and Related Agencies Appropriations Act, 2001, to reimburse the United States Fish and Wildlife Service and the National Marine Fisheries Service to facilitate the interagency cooperation required under the Endangered Species Act of 1973 in connection with wildland fire management.	June 3, 2001	24
107–14	Veterans' Survivor Benefits Improvements Act of 2001	June 5, 2001	25
107–15	Fallen Hero Survivor Benefit Fairness Act of 2001	June 5, 2001	37
107–16	Economic Growth and Tax Relief Reconciliation Act of 2001	June 7, 2001	38
107–17	To extend for 4 additional months the period for which chapter 12 of title 11 of the United States Code is reenacted.	June 26, 2001	151
107–18	To clarify the authority of the Department of Housing and Urban Development with respect to the use of fees during fiscal year 2001 for the manufactured housing program.	July 5, 2001	152
107–19	To authorize funding for the National 4-H Program Centennial Initiative	July 10, 2001	153
107–20	Supplemental Appropriations Act, 2001	July 24, 2001	155
107–21	To honor Paul D. Coverdell	July 26, 2001	194
107–22	To amend the Internal Revenue Code of 1986 to rename the education individual retirement accounts as the Coverdell education savings accounts.	July 26, 2001	196
107–23	To designate the Federal building located at 6230 Van Nuys Boulevard in Van Nuys, California, as the ''James C. Corman Federal Building''.	Aug. 3, 2001	198
107–24	ILSA Extension Act of 2001	Aug. 3, 2001	199
107–25	To respond to the continuing economic crisis adversely affecting American agricultural producers.	Aug. 13, 2001	201
107–26	To reauthorize the Tropical Forest Conservation Act of 1998 through fiscal year 2004, and for other purposes.	Aug. 17, 2001	206
107–27	Federal Firefighters Retirement Age Fairness Act	Aug. 20, 2001	207
107–28	To direct the Secretary of the Interior to convey a former Bureau of Land Management administrative site to the city of Carson City, Nevada, for use as a senior center.	Aug. 20, 2001	208
107–29	To designate the facility of the United States Postal Service located at 5927 Southwest 70th Street in Miami, Florida, as the ''Marjory Williams Scrivens Post Office''.	Aug. 20, 2001	209
107–30	To provide further protections for the watershed of the Little Sandy River as part of the Bull Run Watershed Management Unit, Oregon, and for other purposes.	Aug. 20, 2001	210
107–31	To designate the Federal building and United States courthouse located at 504 West Hamilton Street in Allentown, Pennsylvania, as the ''Edward N. Cahn Federal Building and United States Courthouse''.	Aug. 20, 2001	213
107–32	To designate the facility of the United States Postal Service located at 1030 South Church Street in Asheboro, North Carolina, as the ''W. Joe Trogdon Post Office Building''.	Aug. 20, 2001	214
107–33	To designate the United States courthouse located at 40 Centre Street in New York, New York, as the ''Thurgood Marshall United States Courthouse''.	Aug. 20, 2001	215
107–34	To designate the facility of the United States Postal Service located at 113 South Main Street in Sylvania, Georgia, as the ''G. Elliot Hagan Post Office Building''.	Aug. 20, 2001	216
107–35	To designate the facility of the United States Postal Service located at 419 Rutherford Avenue, N.E., in Roanoke, Virginia, as the ''M. Caldwell Butler Post Office Building''.	Aug. 20, 2001	217
107–36	To designate the facility of the United States Postal Service located at 2719 South Webster Street in Kokomo, Indiana, as the ''Elwood Haynes 'Bud' Hillis Post Office Building''.	Aug. 20, 2001	218
107–37	To provide for the expedited payment of certain benefits for a public safety officer who was killed or suffered a catastrophic injury as a direct and proximate result of a personal injury sustained in the line of duty in connection with the terrorist attacks of September 11, 2001.	Sept. 18, 2001	219
107–38	2001 Emergency Supplemental Appropriations Act for Recovery from and Response to Terrorist Attacks on the United States.	Sept. 18, 2001	220
107–39	Expressing the sense of the Senate and House of Representatives regarding the terrorist attacks launched against the United States on September 11, 2001.	Sept. 18, 2001	222

Public Law	Title	Approved	115 Stat.
107–40	Authorization for Use of Military Force	Sept. 18, 2001	224
107–41	To establish a commission for the purpose of encouraging and providing for the commemoration of the 50th anniversary of the Supreme Court decision in Brown v. Board of Education.	Sept. 18, 2001	226
107–42	Air Transportation Safety and System Stabilization Act	Sept. 22, 2001	230
107–43	United States-Jordan Free Trade Area Implementation Act	Sept. 28, 2001	243
107–44	Making continuing appropriations for the fiscal year 2002, and for other purposes	Sept. 28, 2001	253
107–45	To amend the Immigration and Nationality Act to provide permanent authority for the admission of ''S'' visa nonimmigrants.	Oct. 1, 2001	258
107–46	To amend the Admiral James W. Nance and Meg Donovan Foreign Relations Authorization Act, Fiscal Years 2000 and 2001, to adjust a condition on the payment of arrearages to the United Nations that sets the maximum share of any United Nations peacekeeping operation's budget that may be assessed of any country.	Oct. 5, 2001	259
107–47	Defense Production Act Amendments of 2001	Oct. 5, 2001	260
107–48	Making further continuing appropriations for the fiscal year 2002, and for other purposes	Oct. 12, 2001	261
107–49	To designate the Federal building and United States courthouse located at 121 West Spring Street in New Albany, Indiana, as the ''Lee H. Hamilton Federal Building and United States Courthouse''.	Oct. 15, 2001	262
107–50	Small Business Technology Transfer Program Reauthorization Act of 2001	Oct. 15, 2001	263
107–51	Memorializing fallen firefighters by lowering the American flag to half-staff in honor of the National Fallen Firefighters Memorial Service in Emmitsburg, Maryland.	Oct. 16, 2001	267
107–52	Approving the extension of nondiscriminatory treatment with respect to the products of the Socialist Republic of Vietnam.	Oct. 16, 2001	268
107–53	Making further continuing appropriations for the fiscal year 2002, and for other purposes	Oct. 22, 2001	269
107–54	Providing for the reappointment of Anne d'Harnoncourt as citizen regent of the Board of Regents of the Smithsonian Institution.	Oct. 24, 2001	270
107–55	Providing for the appointment of Roger W. Sant as citizen regent of the Board of Regents of the Smithsonian Institution.	Oct. 24, 2001	271
107–56	Uniting and Strengthening America by Providing Appropriate Tools Required to Intercept and Obstruct Terrorism (USA PATRIOT ACT) Act of 2001.	Oct. 26, 2001	272
107–57	To authorize the President to exercise waivers of foreign assistance restrictions with respect to Pakistan through September 30, 2003, and for other purposes.	Oct. 27, 2001	403
107–58	Making further continuing appropriations for the fiscal year 2002, and for other purposes	Oct. 31, 2001	406
107–59	Great Falls Historic District Study Act of 2001	Nov. 5, 2001	407
107–60	William Howard Taft National Historic Site Boundary Adjustment Act of 2001	Nov. 5, 2001	408
107–61	To authorize the Government of the Czech Republic to establish a memorial to honor Tomas G. Masaryk in the District of Columbia.	Nov. 5, 2001	410
107–62	To authorize the Adams Memorial Foundation to establish a commemorative work on Federal land in the District of Columbia and its environs to honor former President John Adams and his legacy.	Nov. 5, 2001	411
107–63	Department of the Interior and Related Agencies Appropriations Act, 2002	Nov. 5, 2001	414
107–64	Military Construction Appropriations Act, 2002	Nov. 5, 2001	474
107–65	Eightmile River Wild and Scenic River Study Act of 2001	Nov. 6, 2001	484
107–66	Energy and Water Development Appropriations Act, 2002	Nov. 12, 2001	486
107–67	Treasury and General Government Appropriations Act, 2002	Nov. 12, 2001	514
107–68	Making appropriations for the Legislative Branch for the fiscal year ending September 30, 2002, and for other purposes.	Nov. 12, 2001	560
107–69	To amend the Reclamation Recreation Management Act of 1992 in order to provide for the security of dams, facilities, and resources under the jurisdiction of the Bureau of Reclamation.	Nov. 12, 2001	593
107–70	Making further continuing appropriations for the fiscal year 2002, and for other purposes	Nov. 17, 2001	596
107–71	Aviation and Transportation Security Act	Nov. 19, 2001	597
107–72	Need-Based Educational Aid Act of 2001	Nov. 20, 2001	648
107–73	Departments of Veterans Affairs and Housing and Urban Development, and Independent Agencies Appropriations Act, 2002.	Nov. 26, 2001	651
107–74	To prevent the elimination of certain reports	Nov. 28, 2001	701
107–75	Internet Tax Nondiscrimination Act	Nov. 28, 2001	703
107–76	Agriculture, Rural Development, Food and Drug Administration, and Related Agencies Appropriations Act, 2002.	Nov. 28, 2001	704
107–77	Departments of Commerce, Justice, and State, the Judiciary, and Related Agencies Appropriations Act, 2002.	Nov. 28, 2001	748
107–78	To provide authority to the Federal Power Marketing Administration to reduce vandalism and destruction of property, and for other purposes.	Nov. 28, 2001	808
107–79	Making further continuing appropriations for the fiscal year 2002, and for other purposes	Dec. 7, 2001	809
107–80	To designate the Federal building and United States courthouse located at 550 West Fort Street in Boise, Idaho, as the ''James A. McClure Federal Building and United States Courthouse''.	Dec. 12, 2001	810
107–81	Afghan Women and Children Relief Act of 2001	Dec. 12, 2001	811
107–82	To extend the authorization of the Drug-Free Communities Support Program for an additional 5 years, to authorize a National Community Antidrug Coalition Institute, and for other purposes.	Dec. 14, 2001	814
107–83	Making further continuing appropriations for the fiscal year 2002, and for other purposes	Dec. 15, 2001	822
107–84	Muscular Dystrophy Community Assistance, Research and Education Amendments of 2001	Dec. 18, 2001	823
107–85	To designate the facility of the United States Postal Service located at 4270 John Marr Drive in Annandale, Virginia, as the ''Stan Parris Post Office Building''.	Dec. 18, 2001	831
107–86	To designate the facility of the United States Postal Service located at 2853 Candler Road in Decatur, Georgia, as the ''Earl T. Shinhoster Post Office''.	Dec. 18, 2001	832
107–87	Department of Transportation and Related Agencies Appropriations Act, 2002	Dec. 18, 2001	833
107–88	To redesignate the facility of the United States Postal Service located at 5472 Crenshaw Boulevard in Los Angeles, California, as the ''Congressman Julian C. Dixon Post Office''.	Dec. 18, 2001	875
107–89	Amending title 36, United States Code, to designate September 11 as Patriot Day	Dec. 18, 2001	876
107–90	Railroad Retirement and Survivors' Improvement Act of 2001	Dec. 21, 2001	878
107–91	Detroit River International Wildlife Refuge Establishment Act	Dec. 21, 2001	894

Public Law	Title	Approved	115 Stat.
107–92	To designate the facility of the United States Postal Services located at 8588 Richmond Highway in Alexandria, Virginia, as the ''Herb Harris Post Office Building''.	Dec. 21, 2001	898
107–93	To amend the charter of Southeastern University of the District of Columbia	Dec. 21, 2001	899
107–94	Veterans' Compensation Rate Amendments of 2001	Dec. 21, 2001	900
107–95	Homeless Veterans Comprehensive Assistance Act of 2001	Dec. 21, 2001	903
107–96	District of Columbia Appropriations Act, 2002	Dec. 21, 2001	923
107–97	Making further continuing appropriations for the fiscal year 2002, and for other purposes	Dec. 21, 2001	960
107–98	Appointing the day for the convening of the second session of the One Hundred Seventh Congress.	Dec. 21, 2001	961
107–99	Zimbabwe Democracy and Economic Recovery Act of 2001	Dec. 21, 2001	962
107–100	Small Business Investment Company Amendments Act of 2001	Dec. 21, 2001	966
107–101	Providing for the appointment of Patricia Q. Stonesifer as a citizen regent of the Board of Regents of the Smithsonian Institution.	Dec. 21, 2001	973
107–102	Regarding the use of the trust land and resources of the Confederated Tribes of the Warm Springs Reservation of Oregon.	Dec. 27, 2001	974
107–103	Veterans Education and Benefits Expansion Act of 2001	Dec. 27, 2001	976
107–104	To amend chapter 90 of title 5, United States Code, relating to Federal long-term care insurance.	Dec. 27, 2001	1001
107–105	Administrative Simplification Compliance Act	Dec. 27, 2001	1003
107–106	National Museum of African American History and Culture Plan for Action Presidential Commission Act of 2001.	Dec. 28, 2001	1009
107–107	National Defense Authorization Act for Fiscal Year 2002	Dec. 28, 2001	1012
107–108	Intelligence Authorization Act for Fiscal Year 2002	Dec. 28, 2001	1394
107–109	Best Pharmaceuticals for Children Act	Jan. 4, 2002	1408
107–110	No Child Left Behind Act of 2001	Jan. 8, 2002	1425
107–111	African Elephant Conservation Reauthorization Act of 2001	Jan. 8, 2002	2095
107–112	Rhinoceros and Tiger Conservation Reauthorization Act of 2001	Jan. 8, 2002	2097
107–113	District of Columbia Police Coordination Amendment Act of 2001	Jan. 8, 2002	2099
107–114	District of Columbia Family Court Act of 2001	Jan. 8, 2002	2100
107–115	Foreign Operations, Export Financing, and Related Programs Appropriations Act, 2002	Jan. 10, 2002	2118
107–116	Departments of Labor, Health and Human Services, and Education, and Related Agencies Appropriations Act, 2002.	Jan. 10, 2002	2177
107–117	Department of Defense and Emergency Supplemental Appropriations for Recovery from and Response to Terrorist Attacks on the United States Act, 2002.	Jan. 10, 2002	2230
107–118	Small Business Liability Relief and Brownfields Revitalization Act	Jan. 11, 2002	2356
107–119	Office of Government Ethics Authorization Act of 2001	Jan. 15, 2002	2382
107–120	To provide for the installation of a plaque to honor Dr. James Harvey Early in the Williamsburg, Kentucky Post Office Building.	Jan. 15, 2002	2383
107–121	Native American Breast and Cervical Cancer Treatment Technical Amendment Act of 2001	Jan. 15, 2002	2384
107–122	Higher Education Relief Opportunities for Students Act of 2001	Jan. 15, 2002	2386
107–123	Investor and Capital Markets Fee Relief Act	Jan. 16, 2002	2390
107–124	To provide for work authorization for nonimmigrant spouses of treaty traders and treaty investors.	Jan. 16, 2002	2402
107–125	To provide for work authorization for nonimmigrant spouses of intracompany transferees, and to reduce the period of time during which certain intracompany transferees have to be continuously employed before applying for admission to the United States.	Jan. 16, 2002	2403
107–126	To extend for 4 years, through December 31, 2005, the authority to redact financial disclosure statements of judicial employees and judicial officers.	Jan. 16, 2002	2404
107–127	General Shelton Congressional Gold Medal Act	Jan. 16, 2002	2405
107–128	Basic Pilot Extension Act of 2001	Jan. 16, 2002	2407
107–129	To designate the facility of the United States Postal Service located at 65 North Main Street in Cranbury, New Jersey, as the ''Todd Beamer Post Office Building''.	Jan. 16, 2002	2408
107–130	To designate the Richard J. Guadagno Headquarters and Visitors Center at Humboldt Bay National Wildlife Refuge, California.	Jan. 16, 2002	2409
107–131	To amend the Internal Revenue Code of 1986 to simplify the reporting requirements relating to higher education tuition and related expenses.	Jan. 16, 2002	2410
107–132	To designate the National Foreign Affairs Training Center as the George P. Shultz National Foreign Affairs Training Center.	Jan. 16, 2002	2412
107–133	Promoting Safe and Stable Families Amendments of 2001	Jan. 17, 2002	2413
107–134	Victims of Terrorism Tax Relief Act of 2001	Jan. 23, 2002	2427
107–135	Department of Veterans Affairs Health Care Programs Enhancement Act of 2001	Jan. 23, 2002	2446
107–136	To name the national cemetery in Saratoga, New York, as the Gerald B.H. Solomon Saratoga National Cemetery, and for other purposes.	Jan. 24, 2002	2466

Federal Register

Friday,
February 1, 2002

Part II

Reader Aids

Cumulative List of Public Laws 107th Congress, First Session

CUMULATIVE LIST OF PUBLIC LAWS

This is the cumulative list of public laws for the 107th Congress, First Session. Other cumulative lists (1993–2001) are available online at http://www.nara.gov/fedreg/plawcurr.html. Comments may be addressed to the Director, Office of the Federal Register, Washington, DC 20408 or send e-mail to info@nara.fedreg.gov.

The text of laws may be ordered in individual pamphlet form (referred to as ''slip laws'') from the Superintendent of Documents, U.S. Government Printing Office, Washington, DC 20402 (phone, 202–512–2470). The text will also be made available on the Internet from GPO Access at http://www.acess.gpo.gov/nara/nara005.html. Some laws may not yet be available online or for purchase.

Public Law	Title	Approved	115 Stat.
107–1	Recognizing the 90th birthday of Ronald Reagan	Feb. 15, 2001	3
107–2	To designate the United States courthouse located at 1 Courthouse Way in Boston, Massachusetts, as the ''John Joseph Moakley United States Courthouse''.	Mar. 13, 2001	4
107–3	Affecting the representation of the majority and minority membership of the Senate Members of the Joint Economic Committee.	Mar. 13, 2001	5
107–4	Providing for the appointment of Walter E. Massey as a citizen regent of the Board of Regents of the Smithsonian Institution.	Mar. 16, 2001	6
107–5	Providing for congressional disapproval of the rule submitted by the Department of Labor under chapter 8 of title 5, United States Code, relating to ergonomics.	Mar. 20, 2001	7
107–6	To designate the facility of the United States Postal Service located at 620 Jacaranda Street in Lanai City, Hawaii, as the ''Goro Hokama Post Office Building''.	Apr. 12, 2001	8
107–7	To designate the facility of the United States Postal Service located at 2305 Minton Road in West Melbourne, Florida, as the ''Ronald W. Reagan Post Office of West Melbourne, Florida''.	Apr. 12, 2001	9
107–8	To extend for 11 additional months the period for which chapter 12 of title 11 of the United States Code is reenacted.	May 11, 2001	10
107–9	Animal Disease Risk Assessment, Prevention, and Control Act of 2001	May 24, 2001	11
107–10	Concerning the participation of Taiwan in the World Health Organization	May 28, 2001	17
107–11	To expedite the construction of the World War II memorial in the District of Columbia	May 28, 2001	19
107–12	Public Safety Officer Medal of Valor Act of 2001	May 30, 2001	20
107–13	To authorize the Secretary of the Interior and the Secretary of Agriculture to use funds appropriated for wildland fire management in the Department of the Interior and Related Agencies Appropriations Act, 2001, to reimburse the United States Fish and Wildlife Service and the National Marine Fisheries Service to facilitate the interagency cooperation required under the Endangered Species Act of 1973 in connection with wildland fire management.	June 3, 2001	24
107–14	Veterans' Survivor Benefits Improvements Act of 2001	June 5, 2001	25
107–15	Fallen Hero Survivor Benefit Fairness Act of 2001	June 5, 2001	37
107–16	Economic Growth and Tax Relief Reconciliation Act of 2001	June 7, 2001	38
107–17	To extend for 4 additional months the period for which chapter 12 of title 11 of the United States Code is reenacted.	June 26, 2001	151
107–18	To clarify the authority of the Department of Housing and Urban Development with respect to the use of fees during fiscal year 2001 for the manufactured housing program.	July 5, 2001	152
107–19	To authorize funding for the National 4-H Program Centennial Initiative	July 10, 2001	153
107–20	Supplemental Appropriations Act, 2001	July 24, 2001	155
107–21	To honor Paul D. Coverdell	July 26, 2001	194
107–22	To amend the Internal Revenue Code of 1986 to rename the education individual retirement accounts as the Coverdell education savings accounts.	July 26, 2001	196
107–23	To designate the Federal building located at 6230 Van Nuys Boulevard in Van Nuys, California, as the ''James C. Corman Federal Building''.	Aug. 3, 2001	198
107–24	ILSA Extension Act of 2001	Aug. 3, 2001	199
107–25	To respond to the continuing economic crisis adversely affecting American agricultural producers.	Aug. 13, 2001	201
107–26	To reauthorize the Tropical Forest Conservation Act of 1998 through fiscal year 2004, and for other purposes.	Aug. 17, 2001	206
107–27	Federal Firefighters Retirement Age Fairness Act	Aug. 20, 2001	207
107–28	To direct the Secretary of the Interior to convey a former Bureau of Land Management administrative site to the city of Carson City, Nevada, for use as a senior center.	Aug. 20, 2001	208
107–29	To designate the facility of the United States Postal Service located at 5927 Southwest 70th Street in Miami, Florida, as the ''Marjory Williams Scrivens Post Office''.	Aug. 20, 2001	209
107–30	To provide further protections for the watershed of the Little Sandy River as part of the Bull Run Watershed Management Unit, Oregon, and for other purposes.	Aug. 20, 2001	210
107–31	To designate the Federal building and United States courthouse located at 504 West Hamilton Street in Allentown, Pennsylvania, as the ''Edward N. Cahn Federal Building and United States Courthouse''.	Aug. 20, 2001	213
107–32	To designate the facility of the United States Postal Service located at 1030 South Church Street in Asheboro, North Carolina, as the ''W. Joe Trogdon Post Office Building''.	Aug. 20, 2001	214
107–33	To designate the United States courthouse located at 40 Centre Street in New York, New York, as the ''Thurgood Marshall United States Courthouse''.	Aug. 20, 2001	215
107–34	To designate the facility of the United States Postal Service located at 113 South Main Street in Sylvania, Georgia, as the ''G. Elliot Hagan Post Office Building''.	Aug. 20, 2001	216
107–35	To designate the facility of the United States Postal Service located at 419 Rutherford Avenue, N.E., in Roanoke, Virginia, as the ''M. Caldwell Butler Post Office Building''.	Aug. 20, 2001	217
107–36	To designate the facility of the United States Postal Service located at 2719 South Webster Street in Kokomo, Indiana, as the ''Elwood Haynes 'Bud' Hillis Post Office Building''.	Aug. 20, 2001	218
107–37	To provide for the expedited payment of certain benefits for a public safety officer who was killed or suffered a catastrophic injury as a direct and proximate result of a personal injury sustained in the line of duty in connection with the terrorist attacks of September 11, 2001.	Sept. 18, 2001	219
107–38	2001 Emergency Supplemental Appropriations Act for Recovery from and Response to Terrorist Attacks on the United States.	Sept. 18, 2001	220
107–39	Expressing the sense of the Senate and House of Representatives regarding the terrorist attacks launched against the United States on September 11, 2001.	Sept. 18, 2001	222

Public Law	Title	Approved	115 Stat.
107–40	Authorization for Use of Military Force	Sept. 18, 2001	224
107–41	To establish a commission for the purpose of encouraging and providing for the commemoration of the 50th anniversary of the Supreme Court decision in Brown v. Board of Education.	Sept. 18, 2001	226
107–42	Air Transportation Safety and System Stabilization Act	Sept. 22, 2001	230
107–43	United States-Jordan Free Trade Area Implementation Act	Sept. 28, 2001	243
107–44	Making continuing appropriations for the fiscal year 2002, and for other purposes	Sept. 28, 2001	253
107–45	To amend the Immigration and Nationality Act to provide permanent authority for the admission of ''S'' visa nonimmigrants.	Oct. 1, 2001	258
107–46	To amend the Admiral James W. Nance and Meg Donovan Foreign Relations Authorization Act, Fiscal Years 2000 and 2001, to adjust a condition on the payment of arrearages to the United Nations that sets the maximum share of any United Nations peacekeeping operation's budget that may be assessed of any country.	Oct. 5, 2001	259
107–47	Defense Production Act Amendments of 2001	Oct. 5, 2001	260
107–48	Making further continuing appropriations for the fiscal year 2002, and for other purposes	Oct. 12, 2001	261
107–49	To designate the Federal building and United States courthouse located at 121 West Spring Street in New Albany, Indiana, as the ''Lee H. Hamilton Federal Building and United States Courthouse''.	Oct. 15, 2001	262
107–50	Small Business Technology Transfer Program Reauthorization Act of 2001	Oct. 15, 2001	263
107–51	Memorializing fallen firefighters by lowering the American flag to half-staff in honor of the National Fallen Firefighters Memorial Service in Emmitsburg, Maryland.	Oct. 16, 2001	267
107–52	Approving the extension of nondiscriminatory treatment with respect to the products of the Socialist Republic of Vietnam.	Oct. 16, 2001	268
107–53	Making further continuing appropriations for the fiscal year 2002, and for other purposes	Oct. 22, 2001	269
107–54	Providing for the reappointment of Anne d'Harnoncourt as citizen regent of the Board of Regents of the Smithsonian Institution.	Oct. 24, 2001	270
107–55	Providing for the appointment of Roger W. Sant as citizen regent of the Board of Regents of the Smithsonian Institution.	Oct. 24, 2001	271
107–56	Uniting and Strengthening America by Providing Appropriate Tools Required to Intercept and Obstruct Terrorism (USA PATRIOT ACT) Act of 2001.	Oct. 26, 2001	272
107–57	To authorize the President to exercise waivers of foreign assistance restrictions with respect to Pakistan through September 30, 2003, and for other purposes.	Oct. 27, 2001	403
107–58	Making further continuing appropriations for the fiscal year 2002, and for other purposes	Oct. 31, 2001	406
107–59	Great Falls Historic District Study Act of 2001	Nov. 5, 2001	407
107–60	William Howard Taft National Historic Site Boundary Adjustment Act of 2001	Nov. 5, 2001	408
107–61	To authorize the Government of the Czech Republic to establish a memorial to honor Tomas G. Masaryk in the District of Columbia.	Nov. 5, 2001	410
107–62	To authorize the Adams Memorial Foundation to establish a commemorative work on Federal land in the District of Columbia and its environs to honor former President John Adams and his legacy.	Nov. 5, 2001	411
107–63	Department of the Interior and Related Agencies Appropriations Act, 2002	Nov. 5, 2001	414
107–64	Military Construction Appropriations Act, 2002	Nov. 5, 2001	474
107–65	Eightmile River Wild and Scenic River Study Act of 2001	Nov. 6, 2001	484
107–66	Energy and Water Development Appropriations Act, 2002	Nov. 12, 2001	486
107–67	Treasury and General Government Appropriations Act, 2002	Nov. 12, 2001	514
107–68	Making appropriations for the Legislative Branch for the fiscal year ending September 30, 2002, and for other purposes.	Nov. 12, 2001	560
107–69	To amend the Reclamation Recreation Management Act of 1992 in order to provide for the security of dams, facilities, and resources under the jurisdiction of the Bureau of Reclamation.	Nov. 12, 2001	593
107–70	Making further continuing appropriations for the fiscal year 2002, and for other purposes	Nov. 17, 2001	596
107–71	Aviation and Transportation Security Act	Nov. 19, 2001	597
107–72	Need-Based Educational Aid Act of 2001	Nov. 20, 2001	648
107–73	Departments of Veterans Affairs and Housing and Urban Development, and Independent Agencies Appropriations Act, 2002.	Nov. 26, 2001	651
107–74	To prevent the elimination of certain reports	Nov. 28, 2001	701
107–75	Internet Tax Nondiscrimination Act	Nov. 28, 2001	703
107–76	Agriculture, Rural Development, Food and Drug Administration, and Related Agencies Appropriations Act, 2002.	Nov. 28, 2001	704
107–77	Departments of Commerce, Justice, and State, the Judiciary, and Related Agencies Appropriations Act, 2002.	Nov. 28, 2001	748
107–78	To provide authority to the Federal Power Marketing Administration to reduce vandalism and destruction of property, and for other purposes.	Nov. 28, 2001	808
107–79	Making further continuing appropriations for the fiscal year 2002, and for other purposes	Dec. 7, 2001	809
107–80	To designate the Federal building and United States courthouse located at 550 West Fort Street in Boise, Idaho, as the ''James A. McClure Federal Building and United States Courthouse''.	Dec. 12, 2001	810
107–81	Afghan Women and Children Relief Act of 2001	Dec. 12, 2001	811
107–82	To extend the authorization of the Drug-Free Communities Support Program for an additional 5 years, to authorize a National Community Antidrug Coalition Institute, and for other purposes.	Dec. 14, 2001	814
107–83	Making further continuing appropriations for the fiscal year 2002, and for other purposes	Dec. 15, 2001	822
107–84	Muscular Dystrophy Community Assistance, Research and Education Amendments of 2001	Dec. 18, 2001	823
107–85	To designate the facility of the United States Postal Service located at 4270 John Marr Drive in Annandale, Virginia, as the ''Stan Parris Post Office Building''.	Dec. 18, 2001	831
107–86	To designate the facility of the United States Postal Service located at 2853 Candler Road in Decatur, Georgia, as the ''Earl T. Shinhoster Post Office''.	Dec. 18, 2001	832
107–87	Department of Transportation and Related Agencies Appropriations Act, 2002	Dec. 18, 2001	833
107–88	To redesignate the facility of the United States Postal Service located at 5472 Crenshaw Boulevard in Los Angeles, California, as the ''Congressman Julian C. Dixon Post Office''.	Dec. 18, 2001	875
107–89	Amending title 36, United States Code, to designate September 11 as Patriot Day	Dec. 18, 2001	876
107–90	Railroad Retirement and Survivors' Improvement Act of 2001	Dec. 21, 2001	878
107–91	Detroit River International Wildlife Refuge Establishment Act	Dec. 21, 2001	894

Public Law	Title	Approved	115 Stat.
107–92	To designate the facility of the United States Postal Services located at 8588 Richmond Highway in Alexandria, Virginia, as the ''Herb Harris Post Office Building''.	Dec. 21, 2001	898
107–93	To amend the charter of Southeastern University of the District of Columbia	Dec. 21, 2001	899
107–94	Veterans' Compensation Rate Amendments of 2001	Dec. 21, 2001	900
107–95	Homeless Veterans Comprehensive Assistance Act of 2001	Dec. 21, 2001	903
107–96	District of Columbia Appropriations Act, 2002	Dec. 21, 2001	923
107–97	Making further continuing appropriations for the fiscal year 2002, and for other purposes	Dec. 21, 2001	960
107–98	Appointing the day for the convening of the second session of the One Hundred Seventh Congress.	Dec. 21, 2001	961
107–99	Zimbabwe Democracy and Economic Recovery Act of 2001	Dec. 21, 2001	962
107–100	Small Business Investment Company Amendments Act of 2001	Dec. 21, 2001	966
107–101	Providing for the appointment of Patricia Q. Stonesifer as a citizen regent of the Board of Regents of the Smithsonian Institution.	Dec. 21, 2001	973
107–102	Regarding the use of the trust land and resources of the Confederated Tribes of the Warm Springs Reservation of Oregon.	Dec. 27, 2001	974
107–103	Veterans Education and Benefits Expansion Act of 2001	Dec. 27, 2001	976
107–104	To amend chapter 90 of title 5, United States Code, relating to Federal long-term care insurance.	Dec. 27, 2001	1001
107–105	Administrative Simplification Compliance Act	Dec. 27, 2001	1003
107–106	National Museum of African American History and Culture Plan for Action Presidential Commission Act of 2001.	Dec. 28, 2001	1009
107–107	National Defense Authorization Act for Fiscal Year 2002	Dec. 28, 2001	1012
107–108	Intelligence Authorization Act for Fiscal Year 2002	Dec. 28, 2001	1394
107–109	Best Pharmaceuticals for Children Act	Jan. 4, 2002	1408
107–110	No Child Left Behind Act of 2001	Jan. 8, 2002	1425
107–111	African Elephant Conservation Reauthorization Act of 2001	Jan. 8, 2002	2095
107–112	Rhinoceros and Tiger Conservation Reauthorization Act of 2001	Jan. 8, 2002	2097
107–113	District of Columbia Police Coordination Amendment Act of 2001	Jan. 8, 2002	2099
107–114	District of Columbia Family Court Act of 2001	Jan. 8, 2002	2100
107–115	Foreign Operations, Export Financing, and Related Programs Appropriations Act, 2002	Jan. 10, 2002	2118
107–116	Departments of Labor, Health and Human Services, and Education, and Related Agencies Appropriations Act, 2002.	Jan. 10, 2002	2177
107–117	Department of Defense and Emergency Supplemental Appropriations for Recovery from and Response to Terrorist Attacks on the United States Act, 2002.	Jan. 10, 2002	2230
107–118	Small Business Liability Relief and Brownfields Revitalization Act	Jan. 11, 2002	2356
107–119	Office of Government Ethics Authorization Act of 2001	Jan. 15, 2002	2382
107–120	To provide for the installation of a plaque to honor Dr. James Harvey Early in the Williamsburg, Kentucky Post Office Building.	Jan. 15, 2002	2383
107–121	Native American Breast and Cervical Cancer Treatment Technical Amendment Act of 2001	Jan. 15, 2002	2384
107–122	Higher Education Relief Opportunities for Students Act of 2001	Jan. 15, 2002	2386
107–123	Investor and Capital Markets Fee Relief Act	Jan. 16, 2002	2390
107–124	To provide for work authorization for nonimmigrant spouses of treaty traders and treaty investors.	Jan. 16, 2002	2402
107–125	To provide for work authorization for nonimmigrant spouses of intracompany transferees, and to reduce the period of time during which certain intracompany transferees have to be continuously employed before applying for admission to the United States.	Jan. 16, 2002	2403
107–126	To extend for 4 years, through December 31, 2005, the authority to redact financial disclosure statements of judicial employees and judicial officers.	Jan. 16, 2002	2404
107–127	General Shelton Congressional Gold Medal Act	Jan. 16, 2002	2405
107–128	Basic Pilot Extension Act of 2001	Jan. 16, 2002	2407
107–129	To designate the facility of the United States Postal Service located at 65 North Main Street in Cranbury, New Jersey, as the ''Todd Beamer Post Office Building''.	Jan. 16, 2002	2408
107–130	To designate the Richard J. Guadagno Headquarters and Visitors Center at Humboldt Bay National Wildlife Refuge, California.	Jan. 16, 2002	2409
107–131	To amend the Internal Revenue Code of 1986 to simplify the reporting requirements relating to higher education tuition and related expenses.	Jan. 16, 2002	2410
107–132	To designate the National Foreign Affairs Training Center as the George P. Shultz National Foreign Affairs Training Center.	Jan. 16, 2002	2412
107–133	Promoting Safe and Stable Families Amendments of 2001	Jan. 17, 2002	2413
107–134	Victims of Terrorism Tax Relief Act of 2001	Jan. 23, 2002	2427
107–135	Department of Veterans Affairs Health Care Programs Enhancement Act of 2001	Jan. 23, 2002	2446
107–136	To name the national cemetery in Saratoga, New York, as the Gerald B.H. Solomon Saratoga National Cemetery, and for other purposes.	Jan. 24, 2002	2466

Reader Aids

Federal Register

Vol. 67, No. 22

Friday, February 1, 2002

CUSTOMER SERVICE AND INFORMATION

Federal Register/Code of Federal Regulations	
General Information, indexes and other finding aids	**202–523–5227**
Laws	**523–5227**
Presidential Documents	
Executive orders and proclamations	**523–5227**
The United States Government Manual	**523–5227**
Other Services	
Electronic and on-line services (voice)	**523–3447**
Privacy Act Compilation	**523–3187**
Public Laws Update Service (numbers, dates, etc.)	**523–6641**
TTY for the deaf-and-hard-of-hearing	**523–5229**

ELECTRONIC RESEARCH

World Wide Web

Full text of the daily Federal Register, CFR and other publications is located at: **http://www.access.gpo.gov/nara**

Federal Register information and research tools, including Public Inspection List, indexes, and links to GPO Access are located at: **http://www.nara.gov/fedreg**

E-mail

FEDREGTOC-L (Federal Register Table of Contents LISTSERV) is an open e-mail service that provides subscribers with a digital form of the Federal Register Table of Contents. The digital form of the Federal Register Table of Contents includes HTML and PDF links to the full text of each document.

To join or leave, go to **http://listserv.access.gpo.gov** and select *Online mailing list archives, FEDREGTOC-L, Join or leave the list (or change settings);* then follow the instructions.

PENS (Public Law Electronic Notification Service) is an e-mail service that notifies subscribers of recently enacted laws.

To subscribe, go to **http://hydra.gsa.gov/archives/publaws-l.html** and select *Join or leave the list* (or change settings); then follow the instructions.

FEDREGTOC-L and **PENS** are mailing lists only. We cannot respond to specific inquiries.

Reference questions. Send questions and comments about the Federal Register system to: **info@fedreg.nara.gov**

The Federal Register staff cannot interpret specific documents or regulations.

FEDERAL REGISTER PAGES AND DATE, FEBRUARY

4869–5040 1

CFR PARTS AFFECTED DURING FEBRUARY

At the end of each month, the Office of the Federal Register publishes separately a List of CFR Sections Affected (LSA), which lists parts and sections affected by documents published since the revision date of each title.

REMINDERS

The items in this list were editorially compiled as an aid to Federal Register users. Inclusion or exclusion from this list has no legal significance.

RULES GOING INTO EFFECT FEBRUARY 1, 2002

AGRICULTURE DEPARTMENT

Animal and Plant Health Inspection Service

Importation and exportation of animals and animal products:

Bovine spongiform encephalopathy; disease status change—

Slovakia and Slovenia; published 2-1-02

COMMERCE DEPARTMENT

National Oceanic and Atmospheric Administration

Fishery conservation and management:

Caribbean, Gulf, and South Atlantic fisheries—

Gulf king mackerel; published 1-29-02

ENVIRONMENTAL PROTECTION AGENCY

Pesticides; tolerances in food, animal feeds, and raw agricultural commodities:

Bifenazate; published 2-1-02

FEDERAL TRADE COMMISSION

Textile Fiber Products Identification Act:

Natureworks PLA; new generic fiber name and definition; published 2-1-02

PENSION BENEFIT GUARANTY CORPORATION

Single-employer plans:

Allocation of assets—

Interest assumptions for valuing and paying benefits; published 1-15-02

SECURITIES AND EXCHANGE COMMISSION

Securities Act of 1993:

General rules and regulations—

Options disclosure document; published 1-2-02

Securities, etc.:

Equity compensation plans; proxy statements and periodic reports; disclosure requirements; published 1-2-02

TRANSPORTATION DEPARTMENT

Procedural regulations:

Air Transportation Safety and System Stabilization Act; air carriers compensation procedures; published 2-1-02

TRANSPORTATION DEPARTMENT

Federal Aviation Administration

Airworthiness directives:

MD Helicopters, Inc.; published 1-17-02

TREASURY DEPARTMENT

Internal Revenue Service

Income taxes:

Disqualified person; definition; published 2-1-02

COMMENTS DUE NEXT WEEK

AGRICULTURE DEPARTMENT

Animal and Plant Health Inspection Service

Exportation and importation of animals and animal products:

Bovine spongiform encephalopathy; disease status change—

Czech Republic; comments due by 2-4-02; published 12-4-01 [FR 01-30001]

Plant pest regulations update; risk-based criteria; comments due by 2-6-02; published 1-7-02 [FR 02-00263]

Plant quarantine safeguard regulations:

Untreated oranges, tangerines, and grapefruit from Mexico transiting U.S. to foreign countries; comments due by 2-4-02; published 12-4-01 [FR 01-30000]

AGRICULTURE DEPARTMENT

Commodity Credit Corporation

Conservation Reserve Program:

Cropland eligibility and private sector technical assistance; comments due by 2-4-02; published 12-6-01 [FR 01-30213]

COMMERCE DEPARTMENT

National Oceanic and Atmospheric Administration

Fishery conservation and management:

Alaska; fisheries of Exclusive Economic Zone—

Steller sea lion protection measures; comments due by 2-7-02; published 1-8-02 [FR 01-32251]

COMMERCE DEPARTMENT

National Oceanic and Atmospheric Administration

Fishery conservation and management:

Atlantic coastal fisheries cooperative management—

American lobster; comments due by 2-4-02; published 1-3-02 [FR 02-00142]

COMMERCE DEPARTMENT

National Oceanic and Atmospheric Administration

Marine mammals:

Incidental taking—

Atlantic Large Whale Take Reduction Plan; comments due by 2-8-02; published 1-9-02 [FR 02-00274]

COMMERCE DEPARTMENT

National Oceanic and Atmospheric Administration

Permits:

Endangered and threatened species:; comments due by 2-4-02; published 12-21-01 [FR 01-31544]

DEFENSE DEPARTMENT

Acquisition regulations:

Performance-based contracting; comments due by 2-4-02; published 12-6-01 [FR 01-30262]

DEFENSE DEPARTMENT

Acquisition regulations:

Research and development streamlined contracting procedures; comments due by 2-4-02; published 12-6-01 [FR 01-30261]

ENVIRONMENTAL PROTECTION AGENCY

Air programs; approval and promulgation; State plans for designated facilities and pollutants:

Various States; comments due by 2-4-02; published 1-3-02 [FR 02-00104]

ENVIRONMENTAL PROTECTION AGENCY

Air programs; approval and promulgation; State plans for designated facilities and pollutants:

Various States; comments due by 2-4-02; published 1-3-02 [FR 02-00105]

Air programs; State authority delegations:

Maine; comments due by 2-7-02; published 1-17-02 [FR 02-01244]

ENVIRONMENTAL PROTECTION AGENCY

Air programs; State authority delegations:

Virginia; comments due by 2-7-02; published 1-8-02 [FR 02-00407]

ENVIRONMENTAL PROTECTION AGENCY

Air programs; State authority delegations:

Virginia; comments due by 2-7-02; published 1-8-02 [FR 02-00408]

ENVIRONMENTAL PROTECTION AGENCY

Air quality implementation plans; approval and promulgation; various States:

Alaska; comments due by 2-7-02; published 1-8-02 [FR 02-00218]

ENVIRONMENTAL PROTECTION AGENCY

Air quality implementation plans; approval and promulgation; various States:

Alaska; comments due by 2-7-02; published 1-8-02 [FR 02-00219]

FEDERAL COMMUNICATIONS COMMISSION

Radio stations; table of assignments:

Various States; comments due by 2-4-02; published 1-8-02 [FR 02-00370]

Television stations; table of assignments:

Colorado; comments due by 2-4-02; published 12-21-01 [FR 01-31457]

INTERIOR DEPARTMENT

Fish and Wildlife Service

Endangered and threatened species:

San Miguel Island fox, etc. (4 subspecies of island fox); comments due by 2-8-02; published 12-10-01 [FR 01-30188]

INTERIOR DEPARTMENT

Minerals Management Service

Outer Continental Shelf; oil, gas, and sulphur operations:

Exploration under salt sheets; operations suspension; comments due by 2-8-02; published 1-9-02 [FR 02-00521]

INTERIOR DEPARTMENT

Surface Mining Reclamation and Enforcement Office

Permanent program and abandoned mine land

reclamation plan submissions:
New Mexico; comments due by 2-8-02; published 1-9-02 [FR 02-00481]

LIBRARY OF CONGRESS

Copyright Office, Library of Congress

Copyright arbitration royalty panel rules and procedures:
Mechanical and digital phonorecord delivery compulsory license; comments due by 2-6-02; published 1-31-02 [FR 02-02503]

NUCLEAR REGULATORY COMMISSION

Production and utilization facilities; domestic licensing:
Light water reactor electric generating plants; fire protection; comments due by 2-4-02; published 12-20-01 [FR 01-31217]

POSTAL SERVICE

Domestic Mail Manual:
Free matter for blind and other physically handicapped persons; eligibility standards; comments due by 2-4-02; published 1-3-02 [FR 02-00078]

SOCIAL SECURITY ADMINISTRATION

Social security benefits:
Federal old age, survivors, and disability insurance—
Skin disorders; medical criteria; impairments listing; comments due by 2-8-02; published 12-10-01 [FR 01-30431]

TRANSPORTATION DEPARTMENT

Coast Guard

Civil and criminal penalty proceedings:
Marine violation notices; response options; comments due by 2-8-02; published 12-10-01 [FR 01-30480]

Outer Continental Shelf activities:
Gulf of Mexico; petroleum and gas production facilities; safety zones; comments due by 2-8-02; published 12-10-01 [FR 01-30481]

TRANSPORTATION DEPARTMENT

Federal Aviation Administration

Airworthiness directives:
Agusta S.p.A.; comments due by 2-8-02; published 12-10-01 [FR 01-30211]

TRANSPORTATION DEPARTMENT

Federal Aviation Administration

Airworthiness directives:
Bombardier; comments due by 2-7-02; published 1-8-02 [FR 02-00088]

TRANSPORTATION DEPARTMENT

Federal Aviation Administration

Airworthiness directives:
Dassault; comments due by 2-6-02; published 1-2-02 [FR 01-32194]

TRANSPORTATION DEPARTMENT

Federal Aviation Administration

Airworthiness directives:
McDonnell Douglas; comments due by 2-4-02; published 12-5-01 [FR 01-30084]

TRANSPORTATION DEPARTMENT

Federal Aviation Administration

Airworthiness directives:
Raytheon; comments due by 2-4-02; published 12-6-01 [FR 01-30083]

TRANSPORTATION DEPARTMENT

Federal Aviation Administration

Airworthiness directives:
Rolls-Royce Corp.; comments due by 2-4-02; published 12-4-01 [FR 01-29950]

TRANSPORTATION DEPARTMENT

Federal Aviation Administration

Airworthiness directives:
Rolls-Royce plc; comments due by 2-4-02; published 12-4-01 [FR 01-29949]

Airworthiness standards:
Special conditions—
Dassault Aviation Model Mystere-Falcon 200, 20-C5, 20-D5, 10-E5, and 20-F5 airplanes; comments due by 2-4-02; published 1-4-02 [FR 02-00247]

Class E airspace; comments due by 2-4-02; published 1-4-02 [FR 02-00165]

TRANSPORTATION DEPARTMENT

National Highway Traffic Safety Administration

Practice and procedure:
Defects; retention of records, early warning reporting requirements; comments due by 2-4-02; published 12-21-01 [FR 01-31382]

TRANSPORTATION DEPARTMENT

Research and Special Programs Administration

Hazardous materials:
Hazardous materials transportation—
Cargo tank motor vehicles; construction and maintenance requirements; comments due by 2-4-02; published 12-4-01 [FR 01-28117]

TREASURY DEPARTMENT

Customs Service

Articles conditionally free, subject to reduced rates, etc.:
Wool products; limited refund of duties; comments due by 2-7-02; published 1-23-02 [FR 02-01664]

VETERANS AFFAIRS DEPARTMENT

Medical benefits:
Inpatient hospital care and outpatient medical care; copayments; comments due by 2-4-02; published 12-6-01 [FR 01-30182]

LIST OF PUBLIC LAWS

Note: The List of Public Laws for the first session of the 107th Congress has been completed. It will resume when bills are enacted into public law during the next session of Congress. A cumulative List of Public Laws for the first session of the 107th Congress appears in Part II of this issue.

Last List January 28, 2002

Public Laws Electronic Notification Service (PENS)

PENS is a free electronic mail notification service of newly enacted public laws. To subscribe, go to *http://hydra.gsa.gov/archives/publaws-l.html* or send E-mail to **listserv@listserv.gsa.gov** with the following text message:

SUBSCRIBE PUBLAWS-L Your Name.

Note: PENS will resume service when bills are enacted into law during the next session of Congress. This service is strictly for E-mail notification of new laws. The text of laws is not available through this service. **PENS** cannot respond to specific inquiries sent to this address.

TABLE OF EFFECTIVE DATES AND TIME PERIODS—FEBRUARY 2002

This table is used by the Office of the Federal Register to compute certain dates, such as effective dates and comment deadlines, which appear in agency documents. In computing these dates, the day after publication is counted as the first day.

When a date falls on a weekend or holiday, the next Federal business day is used. (See 1 CFR 18.17)

A new table will be published in the first issue of each month.

DATE OF FR PUBLICATION	15 DAYS AFTER PUBLICATION	30 DAYS AFTER PUBLICATION	45 DAYS AFTER PUBLICATION	60 DAYS AFTER PUBLICATION	90 DAYS AFTER PUBLICATION
Feb 1	Feb 19	March 4	March 18	April 2	May 2
Feb 4	Feb 19	March 6	March 21	April 5	May 6
Feb 5	Feb 20	March 7	March 22	April 8	May 6
Feb 6	Feb 21	March 8	March 25	April 8	May 7
Feb 7	Feb 22	March 11	March 25	April 8	May 8
Feb 8	Feb 25	March 11	March 25	April 9	May 9
Feb 11	Feb 26	March 13	March 28	April 12	May 13
Feb 12	Feb 27	March 14	March 29	April 15	May 13
Feb 13	Feb 28	March 15	April 1	April 15	May 14
Feb 14	March 1	March 18	April 1	April 15	May 15
Feb 15	March 4	March 18	April 1	April 16	May 16
Feb 19	March 6	March 21	April 5	April 22	May 20
Feb 20	March 7	March 22	April 8	April 22	May 21
Feb 21	March 8	March 25	April 8	April 22	May 22
Feb 22	March 11	March 25	April 8	April 23	May 23
Feb 25	March 12	March 27	April 11	April 26	May 28
Feb 26	March 13	March 28	April 12	April 29	May 28
Feb 27	March 14	March 29	April 15	April 29	May 28
Feb 28	March 15	April 1	April 15	April 29	May 29